Deutsche Stiftung für internationale Entwicklung
German Foundation for International Development

DSE

Udo Bude & Keith Lewin (eds.)

Improving Test Design

Vol. 1 – Constructing Test Instruments, Analysing Results and Improving Assessment Quality in Primary Schools in Africa

Education, Science and Documentation Centre (ZED) – Bonn

Cover photo: Udo Bude/DSE

Impressum

published by:
Deutsche Stiftung für internationale Entwicklung (DSE)
German Foundation for International Development
Education, Science and Documentation Centre
Hans-Böckler-Str. 5
D-53225 Bonn

editors:
Udo Bude/Keith Lewin

editorial work & typesetting:
txt redaktionsbüro ebert & schmid, Lünen

printed by:
Druckerei Brandt GmbH, Bonn/1997

DOK 1788 a
ISBN 3-931227-27-8 (complete edition)
ISBN 3-931227-28-6 (Volume 1)

1. Introduction

Udo Bade & Keith Lewin

As a follow-up to the World Conference on Education for All in 1990 several countries in southern and eastern Africa started analysing and revising their examination systems with the ultimate aim of improving the quality of teaching/learning. Examinations in countries of the region are a well established feature of the educational systems reaching back to colonial days. The achievements of pupils during the primary school cycle are in most cases tested in end-of-cycle examinations, whereby the performance of a pupil is tested in comparison with other pupils sitting the examination (norm-referenced tests). Such assessment procedures do not provide the full picture and fail to deliver sufficient information about the success of an education system in imparting those skills and competencies as laid down in the curricula.[1] In order to find out how proficient a pupil is in a particular subject, concept or skill without referring to other norm groups of pupils a different approach is required. This may have several elements which include greater use of school based assessment, evaluation of project work and techniques of continuous assessment. It may also seek to define competencies in terms of criterion statements against which performance can be judged. Criterion-referenced assessment is attractive since it sets standards that do not depend on the performance of other pupils and should provide reliable data on what has been achieved during the primary school years. Some countries in the region e.g. Botswana and Swaziland are already experimenting with this kind of approach to assessment.

[1] See Kellaghan, Th. & Greaney, V. (1992) Using Examinations to Improve Education. A Study in Fourteen African Countries. World Bank Technical Paper No. 165. The World Bank, Washington D.C.

Applying more comprehensive concepts of assessment is a significant step towards the improvement of the quality of teaching and learning. National examination systems are mostly designed to judge the individual pupil's achievements for selection purposes and to deliver comparative information about the performance of individual schools and regions. They are often an unreliable guide to actual levels of achievement.

Three aspects have to be taken into consideration when constructing most forms of assessment instruments:

(1) the validity of assessment instruments (do they measure what they claim to be measuring? do they predict future performance adequately if they are to be used for selection?);

(2) their reliability (do they work a consistent measure of performance which could be repeated with similar results? are measurement errors reduced to acceptable levels?);

(3) their technical efficiency (is the system secure, cost-effective, or as appropriate time scale, free of bias towards or against different groups of candidates?).

For most pupils in the region primary education ends after seven to eight years with a national examination. The more selective such examinations are the greater is the attention and importance given by society, because the results of such annual exercises determine significantly the future of many children and the hopes and ambitions of many parents for their offspring.[2] The outcome of the examinations also have severe repercussions on the schools on learning and teaching methods, and on the teachers' role in local communities and within the education system (see box:»Vihiga plan«is the way out/Fortunes change for Kikuyu).

[2] See Dore, R. P. (1976) The Diploma Disease. Unwin Education. London.

EAST AFRICAN

Standard

Established 1902

COMMENT

'Vihiga plan' is the way out

PARENTS in Sabatia Division of Vihiga District have embarked on an ambitious programme to improve education standards in the area.

Part of the master-plan lies in setting up an in-service training centre for secondary and primary school teachers and their deputies. Those who attended the leaders' meeting on how to improve education in the area made proposals of providing lunch to all examination classes in future.

However, whereas there is no so much novelty in advocating for managerial skills for headteachers, or even starting schools' feeding programme, it is important that parents are ready to initiate the scheme on a harambee basis.

Going by the results of the last year's Kenya Certificate of Primary Education (KCPE), one can just understand the urgency of having efforts to improve education in Vihiga. Out of 56 districts and municipalities, Vihiga was number 41.

By all standards, those results were not rosy, but perhaps the most important aspect is that parents are prepared to reverse the situation.

But even then, they are throwing a big challenge to the Ministry of Education and the Teachers Service Commission (TSC) whose responsibility is train and appoint of headteachers.

In the past, appointment of headteachers in both primary and secondary schools has been done in total disregard of experience and competence of headteachers and their deputies. Poor supervision of schools added to the problem.

As the leaders' meeting at Vokoli Girls Secondary School noted, there is paucity in supervision of headteachers, who more often become their own masters and oppressors of parents and other people who refuse to toe the line, or who question their decisions.

It is also important for the Ministry of Education to acknowledge community based programmes, and support them.

Fortunes change for Kikuyu

By STEPHEN [illegible]

The performance of the Kenya Certificate of Education has greatly improved in Kikuyu Division, according to the local education officer, Alan [illegible].

He said the division which used to attain last position in the district was number [illegible].

Kikuyu came third after Lari and Githunguri in last years KCPE results.

Addressing a prize-giving ceremony at Kikuyu Township Primary School recently, the officer [illegible] teachers, pupils and parents to work harder to get better results.

The remarking of [illegible] Gitau Primary School KCPE papers elevated it up from 110th to fourth position with a mean score of 420 marks in the district's 100 schools.

The Zonal Inspector of Schools, Mr James [illegible] and the Teachers Advisory Centre (TAC) tutor, Mrs Magdalene Kiambuthi, praised teachers for their work which had enabled [illegible] to produce six of the top 10 schools and also six of the top 10 pupils in the district.

Kabete produced the best candidate in [illegible] from Mabia-ini Primary School.

Daily Nation 07/3/95

Tuesday, February 28, 1995

Despite the great attention paid to matters of testing and examining at the end of primary education, the examination results rarely provide sufficient information on the effectiveness of the educational system to make confident judgements on educational quality and learning problems. If we are interested in influencing the teaching-learning process in the classroom positively we may have to start with improvements in the ways pupils are assessed. This can indicate what is not being understood and assimilated, and can point the way to strategies to improve levels of achievement.

Any assessment system provides opportunities for teachers, pupils, and educators (e.g. curriculum developers, examination-/testing specialists) to monitor progress and learn from failures as well as successes. However, if large parts of examinations consist mainly of straightforward recall questions where pupils are simply asked to reproduce from memory, opportunities for a more comprehensive assessment of learning outcomes are lost and much teaching will follow objectives narrowly defined by a restricted range of questions. The mere recollection of facts or names does not give any hint of the pupil's problem-solving skills, often so strongly emphasized in the primary school curricula as essential outcomes of learning.

Repetition of whole sections from textbooks fails to indicate whether learners are able to apply their knowledge and skills to different situations. Poorly constructed multiple-choice tests leave much space for guess work and may encourage rote learning. They need to be replaced by a broader concept of assessment testing more complex cognitive processes. Consequently, the first step in a reform of conventional examinations is to analyse existing tests in terms of whether and to what extent they contain items requiring higher-order thinking and application. The next step is to develop or improve test items which examine pupils' abilities to apply what they have learned to less familiar situations and problems or which require them to link events or facts to each other in a consistent way.

The development and design of test items is mainly the domain of examination specialists and/or curriculum developers. The work of all those involved in examinations should, but often does not, include a strong research component in order to find out what kind of assessment procedures deliver the most valid and reliable results efficiently and have the greatest positive influences on classroom teaching. Educationists responsible for the design and analysis of national examinations in eastern and southern Africa are trying hard to improve their assessment systems and to answer the challenges of new ideas and requirements.[3] During recent years new subjects were added to previous core subjects, i.e. like Languages and Mathematics. In many primary school systems History, Geography and Civics or Social Studies have been included, along with science based subjects like Science, Agriculture, Environmental Science, Home Economics. Most or all now feature in the national examinations. Writing meaningful tests for the more practical subjects which go beyond recalling facts requires familiarity and experience with the respective school curriculum as well as with the possibilities and limitations of different types of assessment. Often the demanding curriculum objectives of subjects like Science or Agriculture are not easily tested in an appropriate way. Developing test items assessing pupils' understanding and application of knowledge and skills to new situations require sophistication in constructing assessment instruments even where testing is restricted to multiple-choice questions for reasons of cost and administrative feasibility.

[3] See Njabili, Agnes F. (1993) Public Examination: A Tool for Curriculum Evaluation. Mture Publishers, Dar-es-Salaam.

Education experts responsible for revising national examinations to improve the quality of education can learn from the approaches adopted to reform in different countries in the region, particularly in the following areas:

→ widening the range of skills tested and the instruments used;

→ redesigning examination items to include more which test skills of higher-order thinking;

→ gradually shifting the basis of testing from a norm-referenced to a more criterion-referenced system (measuring pupils' success or failure in relation to criteria which represent competencies independent of the performance of other pupils);

→ considering the possibilities for introducing continuous assessment alongside or instead of terminal examinations, and

→ using pupils' records and profiles which can reflect the acquisition of demonstrated competencies of a wider range of different types than can conventional examinations.

One country in the eastern and southern African region has over many years spearheaded new developments in using national examinations for monitoring and meaningful assessment purposes. Kenya started reforming primary education examination in 1974 with the declared aims of making the examination more relevant, improving the quality of education and ensuring greater equity in the access to secondary schools. Two major strategies for reform were employed; changing the content of the examination papers, and introducing an information-feedback system.»It was hoped that changes in the questions set would make the CPE more relevant as a leaving examination, more equitable to pupils in less-privileged socioeconomic groups, and more reliable as a selection instrument. The introduction of an information-feedback system would, it was hoped, do something to improve the overall quality of the primary school system and to reduce quality differences between high performing and low performing schools.«[4]

[4] Somerset, Anthony (1988) Examinations as an Instrument to Improve Pedagogy. In: Heyneman, Stephen P. & Fägerlind, Ingemar (eds.) University Examinations and Standardized Testing - Principles, Experiences and Policy Options. World Bank Technical Paper No. 78, Washington DC, pp. 171-194, p. 174.

The experience and expertise developed in Kenya over nearly twenty years is therefore very relevant to the present discussion on revising national examination systems in other countries of the region. The Kenya Certificate of Primary Education can serve as an example of possibilities and as entry point to become acquainted with assessment techniques at the end of primary school in the subjects SCIENCE and AGRICULTURE, and for monitoring primary schools in general.

The success of the reform of the primary school examination system has not been achieved without problems. Over the years Kenya has become more and more»exam-ridden«. The results of primary or secondary school examinations receive more and more public attention. Even to the extent that candidates' results are announced over public radio! Regions and school districts compete vigorously to top the lists in the national examinations, very often to the disadvantage of pupils who are unlikely to score highly and those who succeed but do so as a result of long hours of repetitive 'cramming'. The incentives to cheat and find illegal means to pass the test have also created many problems. Heavy emphasis on examinations leads to a neglect of the broader pedagogical tasks of the schools. The school curriculum may be only taught according to the importance of examination subjects and other aspects of the national examination ignored. The»examination tail is wagging the curriculum dog«! John Keeves reminds us of the real purpose of national examinations,»There is little doubt that a national examination has a substantial influence on the teaching that occurs in schools not only during the year at the end of which the examination is held, but in all years that have gone before... it is important that the examinations should have beneficial effects on the teaching and learning that takes place at all earlier stages of schooling«.[5]

[5] Keeves, John P. (1994) National examinations: design, procedures and reporting. UNESCO: IIEP, Paris, p. 98.

The design and conduct of national examinations is therefore not an affair of one group of specialists alone. Examination specialists, curriculum developers, psychometrists and teachers have to cooperate to maximize the beneficial influence of the examinations on practical teaching and avoid excessive testing and examination preparations in the schools. Despite all good intentions on behalf of those setting the national examinations it seems to be extremely difficult to prevent examination»fever«once such examinations have gained too much importance in society as the means through which credentials are obtained, promotion through the school system rationed, and jobs in the labour market allocated.

The manual on IMPROVING TEST DESIGN tries to assist those educationists who are responsible for the design, conduct and control of national examinations in developing higher quality assessment instruments which can provide better information on pupil achievement, a fairer basis for selection, and influence learning and teaching to improve educational quality. It can also be used as a kind of source for training those assisting in the development or processing of examinations. The manual consists of two parts:

Volume 1: Constructing Test Instruments, Analysing Results and Improving Assessment Quality in Primary Schools in Africa,
Volume 2: Assessment of Science and Agriculture in Primary Schools in Africa; 12 Country Cases Reviewed.

Both volumes are the result of two pilot training workshops in Kenya dealing with the development of test items for Science, Agriculture, and Environmental Science and the use of national examinations for improving the quality of primary education. These workshops were jointly organised and conducted by the German Foundation for International Development (DSE), Education, Science and Documentation Centre, and the Kenya Institute of Education (KIE) in cooperation with the Kenya National Examinations Council. Participants came from different countries in eastern and southern Africa. Each country invited was asked to nominate one curriculum developer and one examination specialist, thus guaranteeing that the curriculum aspects for Science, Agriculture, Environmental Science were equally considered with the examination requirements.

Volume one deals with the practical aspects of test construction, analysis and the improvement of assessment procedures. In addition Prof. Keith Lewin (University of Sussex) takes up some of the theoretical aspects, especially the possibilities and limitations of criterion-referenced assessment and test development in general. The practical exercise on developing and administering tests draws to a large extent on the experiences with assignments carried out during the second training workshop in Kenya, where participants designed test items, conducted tests in primary schools and analysed the test results in groups. The experiences of twenty years of examination reform are presented in two analyses authored by education specialists from the Kenya National Examinations Council and the Kenya Institute of Education. Finally, abstracts and papers are documented indicating the discussion and direction of examinations and test constructions in eastern and southern Africa.

Volume two starts with an account and analysis of the present situation regarding primary school leaving examinations of countries in the region. Detailed information for each country is provided in a tabulated overview illustrated by original examination papers in Science, Agriculture and Environmental Science mainly from 1993 and 1994. In few countries Science and Agriculture feature only as part of a larger»General Paper«. In these cases the items covering Science or Agriculture have been included in the documentation. South Africa and Namibia are also included, although presently they have not yet started end-of-primary examinations, but discussions on the composition and design of examinations are in progress. Furthermore, examples of follow-up communications after the examinations from different countries are presented.

2. Theoretical and Practical Aspects of Item Construction for Primary Science Subjects

2.1. Criterion-Referenced Assessment - Panacea or Palliative?

Keith Lewin

Assessment stands at the heart of effective school systems. Without an adequate system of assessment selection will be difficult to legitimate, certification will carry a wide range of meanings, monitoring of school performance will be difficult, and diagnosis and remediation of learning problems will be haphazard. Approaches to assessment vary. This chapter addresses some issues concerned with the long running debate about the relative virtues of norm- and criterion-referenced approaches to assessment and examination.

Many developing countries inherited public examination systems that were essentially norm-referenced. Since the primary purpose of the majority of these examinations was and is the selection of pupils to higher levels of education this is not surprising. Much recent thinking has tended to stress the value of criterion-referencing approaches to both public- and school-based assessment. In these achievement is measured against levels of performance defined by statements of attainment, rather than graded in ways which depend on the performance of other candidates.

One example of these trends is provided by the aftermath of the World Conference on Education for All at Jomtien. This was different from the Universal Primary Education (UPE) initiatives that preceded it in the 1960s (e.g. the Addis Ababa conference). For the first time the declaration included a concern for levels of achievement alongside renewed ambitions to universalise enrolments over the basic education cycle. The implication was that most national systems needed to develop their own country-based definitions of acceptable levels of achievement in different curriculum areas. An important inference was that more stress on criterion-referenced approaches to assessment would assist this process.

This chapter is in three parts. The first part discusses recent thinking on criterion-referenced assessment and raises a number of issues concerned with the advantages and disadvantages of the approach. The second part illustrates some of the dilemmas that may arise by presenting brief case studies of recent developments in the UK and in Mauritius both of which have attempted to link public assessment with criteria for attainment. The last part addresses some issues concerned with the effects of examination practices on internal efficiency with a special concern with repetition rates.

Issues in Criterion-Referencing

Context and Definitions

Discussion of norm-referenced and criterion-referenced testing has a long history. The first mention of approaches to assessment which appear to be criterion-referenced can be traced back into the nineteenth century though it was not until the 1960s that the term was first widely used and an extensive professional literature began to develop. The modern origin of criterion-referenced testing probably lies in the experiences of the U.S. military in 1939-45 in training personnel as operatives of new equipment.»Criterion performance requirements«(Miller 1962)[1] came to specify outcomes and define training experiences. Significantly, most of the tasks to which the approach was applied were closed-ended and often single-event orientated (see below).

[1] For further references see 2.4. Bibliography.

The first wave of emphasis on criterion-referencing techniques in the curriculum development literature was concerned with the use and abuse of behavioural objectives in providing a basis for systematic curriculum development and in defining a framework for teaching and the assessment of learning outcomes. Most recently the growth of various types of vocational provision in many countries has led to increased emphasis on competency-based approaches to training which have been seen as especially suited to criterion-referenced assessment. In a way this echoes the earliest developments of criterion-referencing in relation to military training. Increased stress on criterion-referencing may also reflect the pressures on many education systems to be seen to be publicly accountable in performance terms, and to respond explicitly to demands for increased quality and relevance. Criterion-referencing seems to offer a method to satisfy these developments.

The simplest definitions of norm- and criterion-referenced tests distinguish between tests which are designed to compare the performance of individual students with that of other students, and those which assess performance against a criterion independent of the performance of others. This sounds a simple and powerful distinction. A moments thought indicates that things are not so simple.

In fact, this common kind of definition does not identify two different types of test very effectively; criterion-referenced test items may look very similar to norm-referenced items. If there is a useful distinction it is more concerned with differences in the interpretation of performance on test items than in the nature of the items themselves.

We should note that tests constructed to produce norm-referenced outcomes can be regarded as criterion-referenced - the selection of particular items creates the criteria.

Similarly, criterion-referenced instruments can be used to rank candidates and compare their performance and may therefore be treated as norm-referenced instruments. In either case it can be argued that the validity, reliability, and suitability to purpose of a test may suffer if it is designed for one purpose and used for another. However the point stands that it is the use made of results, rather than the nature of items that most clearly distinguishes between test types.

The reality is that it is often difficult to find examples of either type of examining which do not contain some elements of the other. For example, public school examinations are often considered to be norm-referenced tests with a certain proportion of candidates placed in each grade, year after year, identified from scores standardised onto a normal distribution. Analysis of results over time often produces patterns inconsistent with true norm-referencing. In principle the proportions of candidates achieving each grade should remain constant from year to year. In practice it is not uncommon to observe that greater proportions of higher grades are awarded if time series data is analysed for some public examinations. Where this is the case the strict assumptions of norm-referencing are broken. It is often thought reasonable to suggest that if actual levels of achievement are judged to be increasing greater proportions should get higher grades. But this argument admits the influence of an underlying attachment to a standard of achievement independent of the population taking the test, which is a kind of criterion. Pass rates between subjects may differ significantly. In a norm-referenced system it is not obvious why this should be. The most obvious explanation is that there is a sense in which different standards are being applied to different subjects.

As noted above the items that are selected for a norm-referenced test can be regarded as defining criteria against which performance is being assessed. Each will be drawn from a notional set of similar items designed to assess similar outcomes. It is difficult to argue against the view that many tests that claim to be designed within norm-referenced assumptions adhere implicitly to judgement of standards which link performance to that in previous years (a historical criterion-reference point) and to the judgements of experts concerning acceptable expectations of levels of performance defined by competence in the subject area. They thus manifest some characteristics of criterion-referencing.

Performance on criterion-referenced tests is supposed to be defined independently of the performance of others. It is also often linked to the concept of mastery, which is a quality defined dichotomously - either it is possessed or it is not. Successful performance against a criterion is judged to indicate acquisition of knowledge and skills and readiness for subsequent learning. But few real school tests appear to be tests of mastery which simply assess performance against a criterion in terms of success and failure. This is because it is often not possible to define a criterion with sufficient precision to decide unambiguously whether or not it has been achieved. Judgement intervenes and is often influenced by what are thought to be reasonable expectations of performance at a given level with a given group of candidates - a norm-referenced consideration. Moreover, it is unusual to have criterion-referenced assessments that have no gradation in performance beyond an indication of whether or not a particular criterion has been achieved. More often information is provided and sought on the extent to which performance against a criterion may have failed or succeeded. Grades of performance begin to appear on scales. Though there may be fixed points defined by criterion, interpolation may be norm-referenced. Even the fixed points may be defined more by the proportions of candidates they identify than by absolute levels of achievement which is again a process with a norm-referenced flavour.

The distinction between norm- and criterion-referenced testing is therefore blurred and dogmatic approaches to differentiating between the two have not proved particularly helpful. A less rigid approach, which recognises that the approaches are not in opposition, but inextricably linked in practice, can offer useful insights and suggest new procedures.

The rest of this chapter explores some of the key issues related to developing and using assessments that have a criterion-referenced flavour though they may have hints of a norm-referenced pedigree.

The Origins of Criteria

Much is written about the specification of criteria and surprisingly little about from where criteria originate. This is surprising since it is hardly a trivial issue. A first analysis suggests that there are a number of possibilities which include:

- expectations of society concerning competent behaviour,
- the logic of a subject area,
- the judgements of practitioners within a field,
- historically determined expectations of achievement,
- politically determined priorities applied to education.

Criteria may be suggested by collective expectations of competent behaviour. Thus there is likely to be an expectation that an electrician can wire a house or a plumber can mend a leaking tap. These kinds of expectations may not be sufficiently precise to define a criterion operationally, but they may have a strong formative influence.

What is commonly believed about the characteristics of competence is easy to adopt when developing criteria which may be applied to certification since it may require little further legitimation. It will be widely understood and accepted.

Another possible source of inspiration is the logic thought to be associated with a subject area of the curriculum. A commitment to an empirical approach to the teaching of Science suggests that the knowledge and skill necessary to design experiments, collect data and interpret results should be the basis for the definition of some appropriate performance criteria. Necessary sequencing of ideas may also indicate both the form and ordering of learning criteria (concepts of mass and volume are necessary to comprehend density).

Those who practise a profession may be identified as the group most likely to be able to define the nature of competent behaviour. Criteria for educating scientists could be derived from the opinions of the community of professional scientists. It may need careful consideration to decide whether such experts really are in a position to determine criteria appropriate for the science education of the majority, who will not become professional scientists.

Criteria identified often stand in a clear relationship to previous practice. It is rare that attempts to develop criterion-referenced assessment completely replace existing expectations of levels and types of achievement. More often they refine and extend them.

Thus attempts to introduce criterion-referenced standards to GCSE (General Certificate of Secondary Education) have been compromised by explicitly linking a reference point to previous GCE standards.

Finally, we should not forget that criterion definition may attract the interest of political process. This may seek to include or exclude particular outcomes and incorporate more or less workable criterion statements. It may happen in Science, though not perhaps as much as in other subjects. Nevertheless, ample examples can be found where this has been a consideration.

Curriculum developers and examiners are missing from this list. This is not because they are marginal to the process. It is to act as a reminder that their most valuable role may be to act as an honest broker between criteria emerging from different sources rather than as another vested interest. Durable criteria will not come only from those charged with the technical task of generating working definitions.

Types of Criterion-Referencing Statements

Criterion-referenced statements can usually be located within domains which define the boundaries within which judgements are to be made about achievement. Black and Dockrell classify domains into a threefold typology - single act, closed and open.

A single act domain»comprises a discrete single phenomenon such as the ability to jump 1.25 metres using the straddle jump, or to recall the valency of oxygen«(Black & Dockrell 1984, p. 52). Outcomes are unambiguous. Their statement is often coincident with the appropriate assessable outcome. They may often be judged educationally trivial since they are so narrowly defined and cannot easily be inter-related. They generally stand as discrete achievements.

Closed domains are those cases where it is possible to specify all possible items that could be used to test the domain. For example, if recall of the names of the planets were to be tested all possible cases would be known, though all might not be used in a test that sampled from the full set. The domain is closed because all instances that define acceptable performance are known and can be defined.

Open domains are the most difficult to specify. They are also the ones most commonly applied to educational rather than training tasks. In these cases it is not possible to identify all possible cases that would indicate that performance within the domain was acquired. For example, if it was desired to test whether a concept like gravitational attraction had been understood, there is no way of defining all the potentially infinite set of cases that could be presented that would illustrate mastery of the idea. Open domain specification is more receptive to outcomes that have an integrative character and/or may be defined at a higher level of generality. The price is increasing ambiguity.

The definition of these three types of domain is complemented by another distinction which is of great significance (Black and Dockrell 1984). **Explicit** domain definition occurs when it is possible to specify a domain in advance of constructing items to test its acquisition. This is most likely to be possible in the case of single act domains where the domain virtually specifies the test item. Most discussion of criterion-referenced test construction assumes explicit domain definition as the first step. Satterly (1989) is one of many who adopt this approach. Though this is conceptually attractive it often proves difficult to define domains operationally without developing both domain statement and exemplars.

Implicit domain definition abandons the notion of pre-determined domain statements in terms of a more emergent process. In this case experienced teachers and examiners develop items which in their judgement distinguish between the performance of candidates. The domain is then defined with reference to these items which are judged to discriminate between candidates that are competent and those who are not. This kind of **instrument defined** domain usually stops short of formal statements that can be scrutinised and compared. It seems to reflect what practitioners often do in developing criterion-referenced instruments. In reality it is the exemplars rather than the domain specification that become definitive.

The Precision of Specification

It is important to consider how precisely criteria can be defined. Throughout the 1960s and 1970s arguments raged about the value of different types of statements of educational objectives. The programmed learning movement in particular attempted to pre-specify every learning outcome on the way to more general educational goals. These attempts to define the outcomes of learning more and more precisely became entwined with the development of criterion-referencing. Familiar Tyler-style objectives (specified in terms of behaviour and content) were elaborated into Mager-style objectives (behaviour, conditions, and standards) and Gagne’s five stage objectives (action, object, situation, tools and other constraints, capability to be learned). Most recently in the United Kingdom National Vocational Qualifications (NVQ) specifications typically involve statements of performance criteria, range statements, knowledge and skill requirements, and indications of specific assessment tasks.

Some resisted these developments despite their promise of a precision of definition that would lead inexorable to desired outcomes. They argued that much that was valued could not be captured by behavioural educational objectives and that other types of outcomes (e.g. those located by expressive objectives as discussed by Eisner (1968)) were at least as important. Others began to realise that the search for greater and greater precision in specification was producing diminishing returns and undermining viability. It became clear that, except for the simplest single outcome learning tasks, comprehensive specification of learning outcomes quickly led to the generation of very long and unwieldy lists of behavioural objectives.

Popham wrote one of the first collections of papers on criterion-referencing in the early 1970s (Popham/Baker 1970) and initially identified himself as a committed proponent of the approach. Like others he became concerned that the original idea - that outcomes could be precisely specified - was not achievable. By 1984, he recanted on some of the more extravagant claims for criterion-referencing. Thus he discarded the idea that items that were equivalent but different could be created (functional homogeneity) if only the specification was precise enough, by saying that»About the only way we can ever expect to attain functional homogeneity is to keep pruning the nature of the measured behaviour so that we’re assessing ever more trifling sorts of behaviour. That would be inane«(Popham 1984, p. 39, cited in Wolf 1993).

A softer view gained ground that meso-level specification was essential and that interpretation of these through»common understandings«(which involved judgement based on experience and example) was in practice the only workable approach. Wolf (1993) illustrates this by showing how difficult it is to understand the nature of performance specified by detailed statements of behavioural objectives of manageable length, and how much easier this becomes if examples of typical assessment tasks are given. It is usually the examples, rather than the statement of the objective, that are definitive in shaping the items that are produced by those who do not write the criterion statements.

Levels of Acceptable Performance

Acceptable levels of performance can be defined in a number of ways. It may be sufficient to simply assess performance against a stated criterion which is sufficiently precise to define an acceptable outcome, e.g. can 100 metres be run in less than 14 seconds on a single occasion? More often outcomes cannot be so precisely defined. It may also be necessary to sustain performance across several cases to have confidence that special conditions did not apply or that serendipity has intervened in a particular instance.

One interpretation of a criterion-referenced approach is that performance can be judged in terms of a dichotomous judgement - either the criterion is achieved or it is not. This implies it is really only judgements at the borderline that are important and that it does not matter by how much a performance criterion is exceeded or failed. Whilst this may seem reasonable and workable for individual items, it is usually the case that performance on several criteria is grouped together and these may also measure performance across more than one domain. It begins to appear unreasonable to insist that all items have to be answered successfully in order to demonstrate acceptable performance, though this is sometimes advanced as a condition. Lower thresholds - e.g. 80% of items answered correctly begin to be applied in practice. Whenever this is permitted decisions have to be made on acceptable methods of aggregation.

In many situations value is attached to gradations of performance, partly because it is recognised that the quality of a performance against a criterion usually cannot be reduced solely to statements of measurable outcomes. Assessors and teachers often distinguish between satisfactory and good performance (e.g. on project work) - though two projects may both be considered a pass one may be thought to have reached a different standard than another. Some qualities (for example»elegance«) may be valued in the design of an experiment or the solution of a mathematical problem. These qualities may be felt to warrant recognition and require some grading of the quality of a pass. A level of acceptable performance may then acquire a»flavour«(»starred«,»distinction«) over and above its satisfaction of a criterion.

Judgements about acceptable levels of performance for mastery against criteria may be influenced by norm-referenced considerations. A decision has to be taken as to what it is reasonable to expect as an outcome for a particular group of candidates. It would seem pointless to set criteria of performance at levels unlikely to be achieved by most candidates of a particular age and ability. Similarly, setting criteria at a level regarded as trivial and easily met by most candidates would also be of little value.

Modes of Assessment

The range of options in choosing modes of assessment is very wide. They include individual and group testing; written, oral and practical tasks; open and closed book conditions; self, school-based, or external assessment; continuous formative or infrequent summative assessment; time constrained or unconstrained testing. It is well established that different modes and different formats affect candidates' performance. In the United Kingdom girls appear to perform less well on objective test items and appear to take more time to complete them. Some research suggests that there are cultural differences in trade-offs between speed and accuracy which result in different performance levels in timed tests.

An emphasis on criterion-referencing can be applied to virtually any mode. The format chosen may constrain the range of criterion against which performance can be evaluated. This may be of particular concern where curricula goals are essentially open-ended and assessment instruments are pre-disposed towards closed ended outcomes. A case in point is the widespread reliance on multiple-choice items for testing Primary Science achievement. Though these may be capable of assessing a much wider range of outcomes than they are commonly directed towards, valued outcomes (e.g. manipulative skills, powers of expression, affective outcomes) may be inaccessible through this particular method.

Continuous assessment is as susceptible to criterion-referenced approaches as other forms of examining. It offers the opportunity to reach corners of cognitive and affective achievement that other methods cannot easily reach if a wide range of approaches to gathering assessment data is used. Some recent research has explored possible relationships between external examination results and internal test performance in a sample of schools in Papua New Guinea. Though not conclusive, this study is suggestive that the schools with the highest scoring students have the lowest correlations between external examination score and internal test scores. Conversely the lowest scoring schools appear to have the highest correlations. One possible explanation is that higher performing schools do indeed assess a different and wider range of traits in internal tests than do low performing schools. Clearly the mode of examining can create a different pattern of results (Ross 1994).

Assumed Antecedents

The definition of appropriate criterion-referenced statements generally contains assumptions about antecedent conditions. The specification of a particular learning outcome usually presupposes that other conditions have been met. At the lowest level it will usually be taken for granted that pupils possess adequate levels of literacy and numeracy for them to achieve the criterion specified. By extrapolation it will be assumed that necessary prior learning has taken place and that essential knowledge and skills have been retained.

There is a sense in which the logic of criterion-referencing suggests that all assumed antecedent conditions should be made explicit. They can then be transformed into criteria which would define readiness to approach a new criterion performance level. Though logical, this is of course impractical. The best that may be possible will be to note any essential pre-conditions that might exist that could prevent the possibility of a criterion level of attainment being achieved.

The creation of criterion statements of performance is a forward looking act. The probability of their achievement cannot be separated from previous attainment. This is why the often neglected, but centrally important question of antecedent conditions should be an integral part of attempts to specify criteria.

Reporting Outcomes and the Aggregation Problem

Reporting the results of criterion-referenced tests presents a number of dilemmas. Some of the most important are noted below. First, simply reporting performance in terms of mastery or non-mastery has several disadvantages. It does not distinguish exceptional candidates from those whose passes are marginal; it may allow little insight into the causes of failure or success; single pass/fail boundaries may be so high as to discourage most candidates or so low as to fall into disrepute; pass/fail boundaries may come to be regarded as maximum rather than minimum levels of achievement; pass levels may be achieved through different aggregations which undermine any single construct of mastery.

The last issue merits expansion. Problems of aggregation permeate criterion-referenced and competency-based assessment systems. What at first sight may appear as a simple problem may be very complex to unravel. Once a judgement on performance is compiled from several sources of data the rules associating these have to be determined. What these rules are will determine which candidates meet the criterion and which do not. The kind of dilemmas that arise concern questions of how raw scores on the same criteria should be aggregated; what conditions apply across assessments of different criteria when these are associated together into an overall judgement (are they standardised, are they weighted, do all have to be passed above the criterion level?).

An illustration of the kind of problems that persist concerns the extent to which compensatory performance is permitted. This refers to the degree to which higher performance against one criterion might compensate for low performance against another.

The simple criterion-referenced view of competency - that all its elements can be specified and all essential parts have to be mastered - proves difficult to work in practice. If it is applied it may result in lowering criterion levels sufficiently to allow acceptable proportions of students to be judged competent. In practice some form of compensation is usually allowed. Aggregation rules allow low performance in some areas if the overall performance is judged adequate. But, paradoxically, this accommodation which is necessary to have a workable criterion-referenced system, introduces ambiguity into the meaning of competence or mastery. Those succeeding will have different performance profiles. Mastery will have plurality of meanings.

Criterion-Referencing in Practice - Two Case Studies

England

There are many sources which discuss assessment in the United Kingdom and which relate to the national curriculum and the development of criterion-referencing. This brief review draws attention to some features that may have wider relevance.

The underlying model of attainment is based on the identification of 10 levels of achievement which are specified in relation to attainment targets (ATs) specified for each subject. There are seventeen ATs for Science which are grouped as shown below.

• Exploration of science, communication and the application of knowledge and understanding.

AT1 Exploration of Science

• Knowledge and understanding of science, communication, and the applications of science.

AT2 The Variety of Life
AT3 Processes of Life
AT4 Genetics and Evolution
AT5 Human Influences on the Earth
AT6 Types and Uses of Materials
AT7 Making New Materials
AT8 Explaining How Materials Behave
AT9 Earth and Atmosphere
AT10 Forces
AT11 Electricity
AT12 The Scientific Aspects of Information Technology
AT13 Energy
AT14 Sound and Music
AT15 Using Light and Electromagnetic Radiation
AT16 The Earth in Space
AT17 The Nature of Science

Examples of Attainment Targets are included in the appendix. **AT1 Exploration of Science** is concerned with the development of intellectual and practical skills that allow the exploration of the world of science, the development of understanding of scientific phenomena, and familiarity with the procedures of scientific exploration and investigation. Broadly speaking they cover the general skills associated with:

- Planning, hypothesising and predicting.
- Designing and carrying out investigations.
- Interpreting results and findings.
- Drawing inferences.
- Communicating exploratory tasks and experiments.

The remaining ATs are all classified under knowledge, understanding, applications and implications of science. AT2 is concerned with the variety of life and focuses on knowledge and understanding of the diversity and classification of life and of the relationships, energy flows, cycles of matter and human influences within ecosystems.

There are four **Key Stages (KS)** in the national curriculum. KS1 covers ages 5-7 approximately, KS2 8-11, KS3 12-14, KS4 15-16.

For Science KS1 and 2 include ATs 1-6 and 9-16 only. The ten levels of performance are related to Key Stages as follows:

→ KS1 1-3
→ KS2 2-5
→ KS3 3-7
→ KS4 4-10

Each level of performance for each attainment target has a statement defining the level. The diagram shows how the Key Stages relate to the range of attainment targets at different ages.

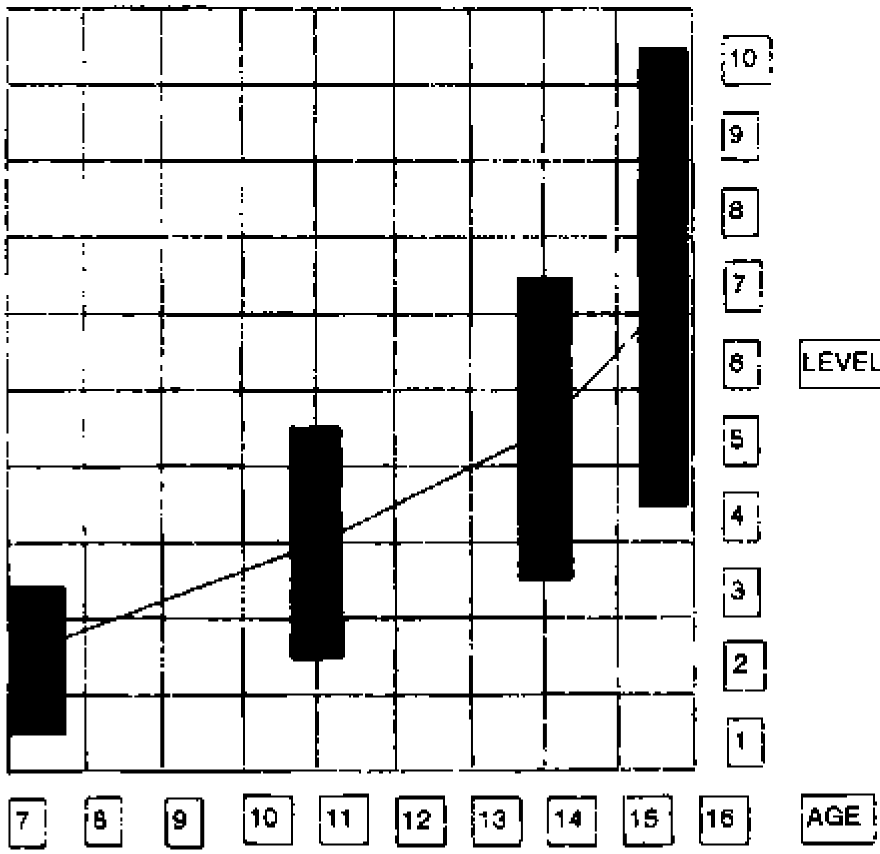

Diagram 1: PUPIL ACHIEVEMENT LEVELS - TGAT MODEL

The expectation is that average pupils will reach level 2 by the end of Key Stage 1 (KS1), level 3/4 at the end of KS2, level 5 at the end of KS3, and levels 6/7 at the end of KS4. Achievement will be spread over a range of levels since pupils will differ in their ability and attainment at any particular age. Progression through the levels is anticipated for all children. Pupils will have the psychological reward of reaching higher levels as they get older, unlike in norm-referenced systems.

Important issues which have arisen in implementing this system are summarised below.

(1) The national curriculum has introduced statements of attainment that define levels of performance on the Science curriculum for each domain of attainment. This is the first time there have been a single set of outcomes defined for Science teaching throughout the primary and secondary school. The specification is essentially criterion-referenced in the sense that the attainment targets (ATs) represent the criteria. However, it is not clear that the ATs are defined sufficiently precisely to ensure what is expected is the same in every school.

(2) From the outset a range of levels of achievement has been anticipated from children of a given age/grade. Performance is reported in terms of level and no one level is the only one appropriate to children in a particular grade. Thus normal children are not all expected to reach say level 5 at one particular age - some will work at level 4, some at level 5 and some at level 6. The range of performance considered normal increases for the higher Key Stages. This recognises that differences in achievement may have a cumulative character that heightens differences over time. KS4 in Science actually has two variants in the specification of ATs, one for more able pupils and one for those who are less capable. It is not clear whether the step size between levels remains constant or increases. The definition of normal expectations seems to suggest that step size increases with level. No clear expectations exist about the distribution of pupils at the end of Key Stages across levels.

(3) There has been considerable debate about the linking of grades from the previous assessment system (i.e. GCSE) to performance levels. There is a problem of reconciling the expectation of an equivalence in standard to the principle of regarding the levels of attainment as being criterion-referenced. To admit linking to a norm-referenced examination appears to contradict the intention of establishing a criterion-referenced system.

(4) Since it is expected that»typical«pupils should perform at Levels 2, 3/4, 5, and 6/7 at ages 7, 11, 14 and 16 there is a sense in which operationally AT criteria are likely to be interpreted in ways which result in this pattern of achievement. To put it another way, if there was a wide divergence from this pattern the framework of Key Stages, ATs and levels of attainment would be undermined. The issue is clearly addressed in the Dearing Report which discusses linking the mid-point of achievement at the end of each Key Stage to»the actual performance of a random sample of pupils on the knowledge, understanding and skills required by a programme of study within a particular Key Stage«(Dearing, R., 1993, p. 43). This is a clear indication of an intention to norm-reference.

(5) As currently specified, it is not clear what procedures are appropriate for the aggregation of performance on attainment targets (ATs) in different domains, or what conditions relate to satisfactory performance at a particular level within a domain. The former is problematic if compensation is permitted and good performance in one domain can make up for poor performance in another. Can exceptional achievement on AT1 compensate for poor performance on AT2 and 3? Within a domain, performance at a particular level may be demonstrated by a pupil in one assessment context but not in another designed to assess the same attainment target at the same level. What conclusion is to be drawn?

(6) Comparability in levels of achievement at the same level in different Key Stages is problematic. Is it really likely to be the case that a level 5 performance by an 11 year old carries the same meaning as a level 5 performance of a 16 year old. It seems unlikely that this is literally the case though in principle it should be so.

(7) The burden of assessment may be excessive. The average pupil reaching level 7 after 11 school years would have been assessed on some 700 statements of attainment. A classroom teacher at Key Stage 1 (7 year olds) with 35 pupils who assessed all pupils against every appropriate statement of attainment would make and record about 8000 judgements each year. This has struck some as an excessive load that has begun to erode teaching time in favour of assessment. Recent changes have responded to this by reducing the burden by as much as 50% at some levels.

(8) The use of attainment targets to define attainment fragments the curriculum. Those outcomes which involve the integration of a variety of skills and understanding are likely to be undervalued and ignored in the assessment process. Skills employed in design and development of experiments may not readily fall into separately assessable components. The whole activity may be more than the sum of its parts. This problem is a strong argument against overspecification of ATs to more and more precise levels.

Mauritius

The Mauritius Examination Syndicate (MES) is experimenting with the introduction of Essential Learning Competencies (ELCs) and Desirable Learning Competencies (DLCs), building on work originally undertaken at the National Council for Educational Research and Training (NCERT) in India. The philosophy behind this is essentially one of criterion-referencing performance in grades 4 and 5 on school-based tests, and in grade 6 which leads to the Certificate of Primary Education.

Essential Learning Competencies are intended to represent the levels of learning achievement in all subjects (knowledge, understanding, skills, abilities, interests, attitudes and values) which are considered minimum but essential for all students to acquire. It is argued that they can be regarded as attainment targets below which learning achievement is not sustainable. Since there is a range of ability and children will progress at different rates, higher order competencies have been specified involving more complex mental processes and/or learning content. These are denoted Desirable Learning Competencies (DLCs) and are treated as optional levels of achievement for certification. Performance on DLCs are considered, in combination with that on ELCs, for selection into secondary schools. This is thus a kind of two level system, though currently the relationships between the levels are not specified in any particular way.

The Mauritius Examination Syndicate has recognised the impossibility of measuring competencies directly in favour of defining detailed learning objectives. Performance on these can be assessed through observable behavioural outcomes. Each subject in the Certificate of Primary Education Examination (CPE) was analysed using a simple taxonomic model (Knowledge, Understanding, Application for»content subjects«and Comprehension and Expression for languages) to identify groups of objectives that could be specified behaviourally. These groups were discussed with a large number of teachers to validate their classification. The lists of»Learning Competencies«that emerged were judged against six criteria. These were:

1. **Sustainability** - achievement that would be retained and used at subsequent levels.

2. **Communicability** - to ensure that each statement had a clear meaning using a standard presentation including two dimensions (content, ability).

3. **Learning Continuity** - to relate ELCs/DLCs to those that come before and after as part of a continuum.

4. **Functionality** - to ensure that statements are at an appropriate level of generality.

5. **Measurability** - to ensure that a learning competency was measurable with a well defined range of acceptable outcomes.

6. **Achievability** - to adjust ELCs/DLCs to appropriate contextual factors including the developmental level of pupils.

As the system is implemented ELCs/DLCs will be used to structure the CPE and should provide diagnostic insights into performance in grades 4 and 6.

Some examples of ELCs and DLCs are included in the appendix (see: chapter 4.5.). Important issues with the implementation of this system appear to be:

(1) ELCs/DLCs are not graded by level. As statements of learning competencies they imply that either candidates possess these competencies or they do not. This may be acceptable on a competency by competency basis but there are obvious risks when they are applied to the population of pupils in a particular grade. ELCs may be set at a low level to ensure that most pupils do in fact demonstrate these competencies. In this case the tasks they present to average and above average pupils are likely to be seen as trivial. Alternatively the ELCs may be set at a higher level to challenge average and above

average pupils. If so large proportions will fail to meet the criteria and they will cease to have practical significance as minimum levels of achievement. The problem lies in specifying a single level rather than a band of acceptable achievement levels for a grade.

(2) There is a risk that minimum levels, wherever they are set, become maxima if there is no recognition of performance above the minimum. If performance is assessed dichotomously then there is no particular incentive for pupils to perform above the minimum level necessary to achieve the ELC or DLC. In so far as this might encourage teachers to give more attention to those pupils having difficulty in acquiring the competency this might be welcomed. If it suppressed the performance of the best pupils it might be a matter of concern.

(3) The problems of aggregation and compensation remain under discussion. Is performance on ELCs simply the total number of ELC items correctly completed? Should minimum scores apply to domains or topics before a competency is deemed to be acquired? Can performance in one area compensate for performance in another either within subjects or across subjects at CPE? How can performance on ELCs be aggregated with performance on DLCs?

(4) Can adequate progression be demonstrated for ELCs and DLCs at different levels? Or are they simply more educational objectives which extend the range but not the level of achievement assessed?

Assessment and Repetition

Table 1 displays a number of indicators of levels of educational development in African countries based on the most recent UNESCO data. From this we can see that unweighted Gross Enrolment Rates (GERs) averaged about 76% in 1990 as they did in 1980. Gender disparities appear prominently for both GERs and Net Enrolment Rates (NERs). At secondary level both GERs appear to have increased over the last decade as, in most countries, secondary school systems have expanded at a faster rate than primary. Average secondary GERs have increased from about 17% to 23%. In most countries transition rates from primary to secondary have almost certainly increased over this period. The average ratio of GER secondary to GER primary increased from 0.23 to 0.28 suggesting that this was a common pattern. Repetition often appears as one of the main sources of internal inefficiency in school systems which results in a suppression of GERs below levels they would otherwise reach (Colclough with Lewin 1993).

Enrolment rates, the rate of flow of pupils through the school system, and the transition rate into secondary are all influenced by assessment practices and levels of achievement. Table 1 shows that repetition can be high in all grades through the primary school system. Characteristically it is greatest in the grade preceding primary school leaving examination levels, as failing students repeat to improve their chances of gaining access to secondary school. This is most commonly at grade 6 and repetition averages 28% at this level. Average repetition rates in each grade are around 20% implying that enrolment rates could be about 20% greater at no extra cost if repetition was reduced to insignificant levels. Repetition is a very significant source of internal inefficiency in many systems.

Internal school assessments generally determine rates of repetition and promotion through the primary school. The information which is used to determine whether or not students repeat will vary considerably from system to system. Most commonly teachers make judgemental decisions on unstandardised data drawing on experience with other students. Although this may appear in some sense to be criterion-referenced (teachers applying the criterion of successful completion of a year’s work), in practice it may well have a strong element of norm-referencing, with those pupils well below average in performance being retained in the grade for that reason.

It is also likely that individual teachers will not wish to have repetition rates amongst their classes much greater than other teachers, so a»normal«expectation may exist. In addition there may be national norms (as in China under the nine year basic education law) concerning the rate of repetition that is acceptable. Almost certainly the level of performance that results in decisions to repeat will vary from school to school and from teacher to teacher. A further complication will arise when there are incentives to keep repetition rates high (either because this will result in increased enrolment or because it will maximise pass rates of pupils entered for public examinations).

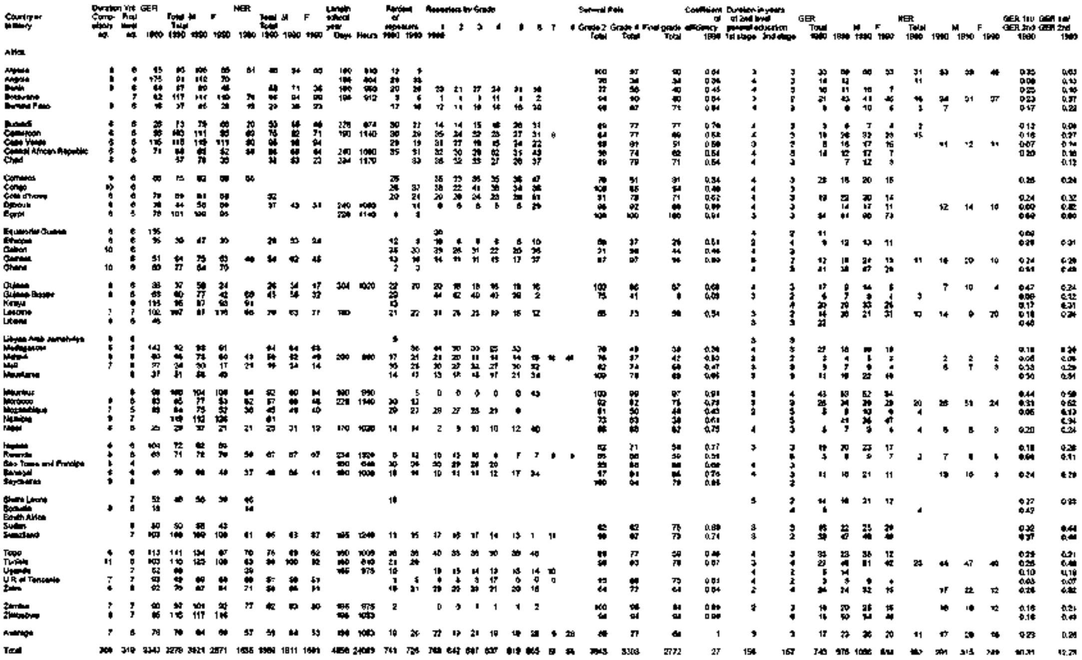

Table 1. First level education: enrolment ratios

SOURCE: UNESCO (1993) World Education Report 1993. Unesco Publishing

Internal, school-based assessment in most primary school systems is based on instruments that mirror primary school leaving examinations. This is evident from research studies (e.g. Chimwenje in Malawi 1993) and from the kind of books published to assist revision. The decisions that teachers make will therefore be based on experience mediated by information provided by tests that mimic public examination formats. Thus, for example, if the latter use multiple-choice items then most assessment will follow this pattern regardless of the emphasis of curricular objectives. If they are designed according to norm-referenced criteria (so that for example facility values are about 50% and discrimination is high), school tests will also adopt similar assumptions.

There is an opportunity to use increased emphasis on criterion-referenced approaches to assessment to encourage teachers to think more carefully about the learning outcomes that define acceptable performance and use performance against these criteria to identify areas of special weakness in need of remediation. In principle decisions to invite students to repeat should be based on a common yardstick of achievement rather than a sliding judgemental scale that differs from school to school. This should also draw attention to where schools rather than pupils are failing. There are schools in some systems where more than 30% of children within a grade become repeaters. This invites questions about the quality of the school and its teachers, and the appropriateness of the standard that is being applied (rather than the easy assertion that low performance is attributable to out-of-school factors). More emphasis on criterion-referencing should place achievement levels closer to those which are attainable by the majority of pupils in effectively managed schools since little purpose is served by defining criteria out of reach of a large proportion of pupils.

There remains a risk that more emphasis on criterion-referenced approaches to internal school assessment will be seen as unduly time-consuming and complex and that instruments will be used as if they were intended to be norm-referenced. Ideas of measuring performance against averages, ranking pupils in order of achievement within the class, and rating relatively good and poor schools by comparison of examination results are deeply embedded in the culture of teachers. Attempts at criterion-referencing do encourage clear consideration of educational purpose which ought to be part of every teacher's lesson planning. There is no particular reason why criterion-referenced instruments should be more time-consuming to construct and use than well constructed norm-referenced assessments. Often individual items within a criterion-referenced set may be similar to well constructed items used for norm-referenced assessment as noted earlier. The real problem is to find ways of improving the reliability and validity of internal school assessments and adopting simple criterion-referencing can help with this.

In countries where there are not enough places in secondary schools to accommodate all those completing primary school the transition from primary to secondary is generally controlled through a primary school leaving examination. These examinations are often retained when transition rates reach high levels and almost all children proceed to secondary since selection (for different secondary schools) remains an issue. An external examination also provides information which is otherwise unavailable which can be used to monitor school performance.

Primary school leaving examinations have a considerable importance in determining life chances. The content and format of them often washes back onto curriculum decisions and assessment practices at the school level. They exercise extensive influence over teaching and learning (Dore 1976, Oxenham 1984). They also determine the amount of repetition that takes place in the transition grades.

Two types of repetition occur in the final grades of the primary cycle. The first is amongst those who have failed a primary school leaving examination and repeat in order to pass. The second type of repetition is by those who have passed but who wish to improve their ranking to be selected by better secondary schools. In some systems (e.g. Mauritius) the latter may reach 40% of all repeaters in the last year of primary.

Where external assessment instruments are norm-referenced and pass and fail grades are determined on a norm-referenced basis, it will be the case that a pre-determined proportion of candidates will»fail«. This will remain true whether or not their actual level of achievement improves. Assessment in this case is a zero sum game where improvement by one child (or school) must be balanced by relative deterioration by another. There will be as many pupils and schools above average as below and not all pupils/schools/districts can be above average (as in the debate concerning whether 50 States in the USA could all be above average on elementary school tests; Cannell cited in Shephard 1991).

In norm-referenced systems it is not clear what implications should be drawn where failure rates (and consequent repetition) is great. The problem is that if the assessment really is norm-referenced then high rates of failure are the result of conscious design and cannot be changed by improved performance amongst candidates. Thus in some systems pass rates in key subjects like English and Mathematics may be as low as 20 -30%. If the assessment is norm-referenced this implies a particular judgement of where to draw the pass/fail boundary. It carries the message that the achievement of the majority of candidates in these subjects is not worth recognition. Pedagogically this seems undesirable. If pass rates vary between subjects in norm-referenced systems it is because of choices made to make some subjects relatively difficult rather than because some subjects are intrinsically more difficult.

Introducing some elements of criterion-referenced assessment to primary school leaving examinations is claimed to be attractive for a number of reasons. In principle it would seem to:

- allow performance to be measured against a fixed and public standard,

- reward improvements in performance since all pupils, schools and districts could see performance improve at the same time,

- permit certification based on criteria,

• encourage educational objectives to be more clearly specified.

The main disadvantage is that criterion-referencing would not necessarily»pass«the numbers of pupils for which places exist at secondary level. It might also make it more difficult to finely grade performance. Leaving qualifications certifying specific levels of achievement related to criteria would not guarantee entrance to secondary schools. They might therefore be seen to have limited value. Significant numbers of candidates might be»qualified«according to entrance criteria but would not necessarily be admitted to a secondary school. A greater emphasis on criterion-referenced approaches could increase the probability of curriculum sensitive item writing, improve the quality of diagnostic information available and improve standards of attainment (Lewin 1992) if introduced flexibly without over specification of attainment levels.

Concluding Remarks

This chapter has discussed the issues that surround the development of criterion-referenced assessment instruments and identified major problem areas. It has summarised recent experience with the national curriculum in England and with Learning Criteria in Mauritius. Finally, it explored some of the relationships that exist between decisions on testing and repetition and transition rates from primary to secondary school.

The title of the chapter contains a question that has not been answered. Is criterion-referencing a panacea that will overcome objections to norm-referenced styles of assessment, or is the new emphasis a false dawn? This analysis suggests that it is neither. Criterion-referencing cannot of itself resolve many of the enduring dilemmas in assessment. Intrinsically it is no more reliable or valid than other approaches. Neither is it more cost-effective or technically less demanding. Nor can it resolve the difficulties of undertaking and legitimating the selection of some students from many. The approach does have the special value that it forces systematic consideration or purpose in a more focused way than most others. For this reason alone its development is worth encouraging. It is more than a palliative that allows prevarication. It can actually help draw attention to critical issues that require policy decisions and may make it more difficult to avoid these. The problem of repetition and its reasons is one area in which this is evident.

In conclusion the challenge for the future is to explore the complementarities between criterion-referenced and norm-referenced approaches to assessment. Neither on their own are sufficient to service the needs for information to aid decision making on individuals, schools, and education systems.

2.2. Test Development - Designing Tests and Presenting Results

Keith Lewin

Introduction

This chapter provides a simple introduction to the construction of some forms of assessment. To design an assessment instrument decisions must be made in three main areas These, are:

(1) Deciding on the purpose(s) of the test.
(2) Developing (or utilizing existing) statements of specific measurable learning objectives.
(3) Selecting the most appropriate test instruments.

The first three parts of this chapter discuss these issues briefly. The fourth part lists some key concepts. The fifth part briefly discusses the construction of simple tests. Part six and seven provide some examples of types of multiple-choice questions and a checklist of good practice in their construction. Finally, the last two sections comment on reporting results and introduce simple standardization procedures.

Purposes

It is always important to have clearly in mind the purpose(s) for which a test is being constructed. Its nature will depend upon, amongst other things, the uses to which results will be put (rank ordering for selection, diagnostic feedback on individuals or on the effectiveness of teaching, evaluation of curriculum materials, comparison of previous and present achievement of individuals etc.). A recent list of purposes covers the range likely to be encountered (Pennycuick 1990):

Recording and reporting attainment	Diagnosis and remediation
Certification and qualification	Curriculum evaluation
Selection and social regulation	Feedback on teaching and organizational effectiveness
Prediction	Teacher motivation and appraisal
Measurement of individual differences	Curriculum control
Motivating students	Evidence for accountability/resource provision
Monitoring progress and feeding back information	Maintaining or enhancing standards
Guidance	

Assessment plays a central role in teaching strategies; it can provide opportunities for revision (both before and after administration), it may be used to motivate students, its nature almost certainly influences patterns of learning. Assessment is not therefore a necessary chore, but an integral part of teaching and learning. It is thus important that those who use assessments, as well as those who design them, have a clear idea of their purposes and what it is hoped will be achieved through the use of particular assessment instruments.

Objectives

To be able to construct any assessment that measures achievement for whatever purpose it is essential that such achievement is specified in terms of measurable and observable outcomes. A well designed curriculum will indicate the nature of its intended outcomes. If it does not then users must develop such specifications in order to be able to construct an assessment instrument that is valid.

For any curriculum there is likely to be a range of objectives of different types, e.g. at general and more specific levels, short-term and long-term, within different domains (cognitive, affective etc.). Not all of these will be susceptible to direct measurement during the teaching of a course and some perhaps not at all. Though it may be that some desirable objectives are of a kind which cannot be assessed easily many valued outcomes are likely to be directly assessable, albeit with varying degrees of precision. Without systematic attempts to define intentions and measure progress towards their achievement it will be difficult if not impossible to make judgements concerning the effectiveness of teaching.

Several taxonomies of education objectives exist in which attempts have been made to break down learning behaviour into well defined categories. An example of such a categorization in the cognitive domain with descriptions of meaning and illustrative objectives derived from them is included below (see Table 2, derived from Bloom et al. 1971). References to other taxonomies may be found in books cited in the reading list.

Table 2: Major Categories of Cognitive Objectives with Examples		
Descriptions of the Major Categories in the Cognitive Domain	**Illustrative General Instructional Objectives**	**Illustrative Behavioural Terms for Stating Specific Learning Outcomes**
1. Knowledge Knowledge is defined as the remembering of previously learned material. This may involve the recall of a wide range of material, from specific facts to complete theories, but all that is required is the bringing to mind of the appropriate information. Knowledge represents the lowest level of learning outcomes in the cognitive domain.	Knows common terms. Knows specific facts. Knows methods and procedures. Knows basic concepts. Knows principles.	Defines, describes, identifies, labels, lists, matches, names, outlines, reproduces, selects, states.
2. Comprehension Comprehension is defined as the ability to grasp the meaning of material. This may be shown by translating material from one form to another (words to numbers), by interpreting material (explaining or summarizing), and by estimating future trends (predicting consequences or effects). These learning outcomes go one step beyond the simple remembering of material, and represent the lowest level of understanding.	Understands facts and principles. Interprets verbal material. Interprets charts and graphs. Translates verbal material to mathematical formulas. Estimates future consequences implied in data. Justifies methods and procedures.	Converts, defends, distinguishes, estimates, explains, extends, generalizes, gives examples, infers, paraphrases, predicts, rewrites, summarizes.
3. Application Application refers to the ability to use learned material in new and concrete situations. This may include the application of such things as rules, methods, concepts, principles, laws and theories. Learning outcomes in this area require a higher level of understanding than those under comprehension.	Applies concepts and principles to new situations. Applies laws and theories to practical situations. Solves mathematical problems. Constructs charts and graphs. Demonstrates correct usage of a method or procedure.	Changes, computes, demonstrates, discovers, manipulates, modifies, operates, predicts, prepares, produces, relates, shows, solves, uses.
4. Analysis Analysis refers to the ability to break down material into its component parts so that its organizational structure may be understood. This may include the identification of the parts, analysis of the relationships between parts, and recognition of the organizational principles involved. Learning outcomes here represent a higher intellectual level than comprehension and application because they require an understanding of both the content and the structural form of the material.	Recognizes unstated assumptions. Recognizes logical fallacies in reasoning. Distinguishes between facts and inferences. Evaluates the relevancy of data. Analyses the organizational structure of a work (art, music, writing).	Breaks down diagrams, differentiates, discriminates, distinguishes, identifies, illustrates, infers, outlines, points out, relates, selects, separates, subdivides.

5. Synthesis Synthesis refers to the ability to put parts together to form a new whole. This may involve the production of a unique communication (theme or speech), a plan of operations (research proposal), or a set of abstract relations (scheme for classifying information). Learning outcomes in this area stress creative behaviours, with major emphasis on the formulation of *new* patterns or structures.	Writes a well-organized theme. Gives a well-organized speech. Writes a creative short story (or poem, or music). Proposes a plan for an experiment. Integrates learning from different areas into a plan for solving a problem. Formulates a new scheme for classifying objects (or events, or ideas).	Categories, combines, compiles, composes, creates, devises, designs, explains, generates, modifies, organizes, plans, rearranges, revises, rewrites, summarizes, tells, writes.
6. Evaluation Evaluation is concerned with the ability to judge the value of material (statement, novel, poem, research report) for a given purpose. The judgements are to be based on definite criteria. These may be internal criteria (organization) or external criteria (relevance to the purpose) and the student may determine the criteria or be given them. Learning outcomes in this area are highest in the cognitive hierarchy, because they contain elements of all of the other categories, plus conscious value judgements based on clearly defined criteria.	Judges consistency of written material. Judges the adequacy with which conclusions are supported by data. Judges the value of a work (art, music, writing) by use of internal criteria. Judges the value of a work (art, music, writing) by use of external standards of excellence.	Appraises, compares, concludes, contrasts, criticizes, describes, discriminates, explains, justifies, interprets, relates, summarizes, supports.

When devising objectives that utilise verbs related to statements of behaviour it is important to remember that it is the candidates that have to discriminate between meanings. The difference between comparing and contrasting may be clear to test constructors; experience would suggest that often it is unclear to many school pupils. Whatever system of classifying objectives is used some useful guidelines apply if tests are to be developed based on statements of learning objectives.

- Objectives should be stated in terms of <u>student behaviour</u>, not in terms of learning activities or the intentions of the teacher.

- Objectives should begin with an <u>action verb</u> that indicates the behaviour a student is expected to demonstrate.

- Objectives should be stated in terms of <u>observable changes in behaviour</u>.

- Objectives should be <u>stated as precisely as possible</u> in terms that have agreed meanings.

- Objectives should <u>relate to only one process</u> at a time.

- Objectives should be stated at an a<u>ppropriate level of generality</u>.

- Objectives should represent <u>intended outcomes</u> of learning experiences.

- Objectives should be <u>realistic</u> given the context.

In constructing objectives it is as well to remember that some verbs describe behaviour far less ambiguously than others (see the list below from Mager 1962).

Verbs open to many interpretations	Verbs open to fewer interpretations
to know	to write
to understand	to recite
to really understand	to identify
to appreciate	to differentiate
to appreciate fully	to solve
to grasp the significance of	to construct
to enjoy	to list
to believe	to compare
to have faith in	to contrast

Selection of Instruments

Having decided on the purpose of a test and arrived at appropriate statements of observable outcomes, a strategic choice can be made between available testing techniques. Four relevant background questions should help to narrow the choice. These are:

(1) Is the technique viable? (e.g. Does it demand skills and staff-time in setting and marking that are unavailable?).

(2) Can it measure effectively the behaviours we are interested in? (e.g. Multiple-choice questions cannot test powers of expression).

(3) Is it appropriate? (e.g. Does it reinforce or undermine overall objectives? -A testing strategy concentrating on recall of information will not encourage the application of concepts and principles by students).

(4) What assumptions do we make in opting for a particular strategy? (e.g. Are students sufficiently literate to understand and reply to test questions or is the test primarily testing literacy?).

The range of available techniques is very wide. Some of the common possibilities are indicated below. Most combinations from the columns are possible.

Table 3: Testing Techniques					
Modes	Methods	Conditions	Marking	Occurrence	Timing
Individual	Written	Open Book	Self	Continuous	Fixed Time Limit
Group	Oral Practical	Functional Information Closed Book	Internal External	Frequent Infrequent	Flexible Time Limit

Questions in written examinations commonly take two main forms, i.e. **Open Response** where a candidate has freedom to structure an answer in whatever way he/she feels is appropriate (typically»essay«questions); **Closed Response** where questions are structured to admit only one unambiguously defined response (typically objective multiple-choice questions). Between these two extremes lie many different types which use different levels of structure and varying degrees of pre-specification of acceptable responses.

Table 4: Advantages and Disadvantages Associated with Different Type of Items		
	Open Response	Closed Response
Abilities measured	Powers of expression can be tested. High levels of reasoning may be required, e.g. inference, organization of ideas, comparison and contrast, synthesis, evaluation. Inefficient at indicating knowledge of factual information.	Powers of selection of correct response from given options - may work by elimination. Recognition may be more important than recall. Individual words or phrases may be required for recall. Can operate at high reasoning levels, though synthesis and evaluation difficult to test. Measures factual knowledge efficiently.
Scope	Covers a limited area, questions can usually only sample small parts of curriculum. Fluent students can avoid displaying the extent of their ignorance.	Curriculum content can be efficiently covered at knowledge levels. Reliability benefits from this.
Motivational Implications	Encourage development of powers of expression and the ability to organize material in a communicable form. Selective in-depth consideration of curriculum worthwhile.	Encourages the development of broad background knowledge and abilities.
Examiner	Small numbers of questions therefore less preparation.	Large numbers of questions, many pitfalls in their construction. Time-consuming and demanding.
Scoring	Time-consuming and unreliable, allows comment on candidates' reasoning.	Rapidly scored and reliable.

Some Key Concepts

There are a number of terms associated with tests that it is necessary to be familiar with. Amongst the most important are:

• Validity
This has two primary meanings; **Content Validity** is the degree to which a test comprehensively samples achievement of the objectives of a course in relation to its content; **Predictive Validity** is the extent to which test results can be relied upon as an indication of future performance. Content validity can be applied at individual question level.

• Reliability
This has many definitions related to different ways in which it can be calculated. It refers to the confidence that can be placed in achievement on a test (or individual items) as being a replicable indication of performance (e.g. would the results be the same if marked by different examiners or if taken under similar conditions by the same candidates at a different time).

• Facility
An indication of how easy a test (or item) is for average candidates (or conversely called Difficulty, defined by how difficult a test (or item) is for average candidates).

• Discrimination
An indication of how effectively a test (or individual item) discriminates between the performance of high and low achieving candidates.

• Norm-Referenced Tests
Tests where the performance of a candidate is compared to the performance of other candidates, e.g. a public examination where a fixed proportion of candidates achieve particular grades.

• Criterion-Referenced Tests
Tests where the performance of a candidate is expressed in terms of its relationship to a fixed criterion that is dependent on the nature of the achievement being measured, not the performance of others.

• Domain-Referenced Tests
A test consisting of items which sample representatively performance in a clearly defined area of knowledge or skill.

• Table of Specifications
This refers to a test plan, usually in the form of a grid, that tabulates different characteristics of a test, e.g. content areas and behavioural outcomes for each item in a test (see below).

Table 5: Test Specification

Topics	**Abilities/Behaviours:**				
	Knowledge	**Comprehension**	**Application**	**Analysis/ Synthesis Evaluation**	**Total %**
1. Solid Friction	1,2,3	4	5		25
2. Surface Tension	6,7,8,9	10		11	30
3. Elasticity	12,13	14	15		20
4. Momentum	16,17	18	19	20	25
Total %	55	20	15	10	100

Specifications of this kind may be useful in indicating the distribution of items and planning the desired coverage. Information on item characteristics may also be included (e.g. facility value). A modified grid of this kind can be used to keep track of individual pupil progress and achievement throughout a year.

Simple Test Construction

In constructing simple tests a number of stages are desirable. These clearly vary depending on the purpose(s) identified and the strategic decisions made about the instruments to be used. By way of example let us consider the design of a multiple-choice question paper. Though different decisions may be made on the inclusion of items depending on whether the test is to be treated as norm- or criterion-referenced, much of the procedure likely to be used has common elements.

Sequence of Events

(1) Make decisions on purpose and identify statements of testable objectives. If the test is criterion-referenced identify domains which will be assessed.

(2) Map a **Table of Specifications** for the test. Greater specificity of the table may make it easier to decide whether a question is appropriate for inclusion. The map should indicate how domains are covered by items.

(3) Write test questions (see checklist of Use in Constructing Multiple-Choice Questions). Domain definition may suggest criterion-referenced items.

(4) Logically review test question items - preferably getting another experienced member of staff to participate. This may include:

• consideration of the question as a whole; e.g. for validity, relevance, likely facility;

• checking classification against a Table of Specifications;

• answering questions without referring to answers anticipated;

• examining questions in terms of»checklist«criteria;

• ensuring that presentation and format allow for ease of understanding, response and marking.

(5) Empirically review test items:

• item facility
• item discrimination
• reliability assessments
• instructional sensitivity procedures.

Illustrative examples of types of items, a list of some common pitfalls in their construction, and a Checklist of points related to writing items are provided on the next pages.

Some Examples of Item Types

1. **Free Response**

How far is it from Cairo to Nairobi? When will the next election take place?

2. **Fixed Response** (Multiple-Choice)

• What is the capital of Zimbabwe?			(STEM)
(knowledge of specific facts)	A	Colombo	
	B	Lagos	
	C	Lilongwe	
	D	Accra	
	E	Harare	

What is the product of 5 and 3?		
(problem solving)	A	1 2/3
	B	8
	C	15
	D	35
	E	112

• If an electric refrigerator is operated with its door open in a perfectly insulated sealed room, what will happen to the temperature of the room?		
(prediction)	A	It will rise slowly.
	B	It will remain constant.
	C	It will drop slowly.
	D	It will drop rapidly.

• Should merchants and middlemen be considered as producers or non-producers. Why?		
(decision, explanation)	A.	As non-producers, because they make their living of producers and consumers.
	B	As producers, because they are regulators and determiners of price.
	C	As producers, because they aid in the distribution of goods and bring producer and consumer together.
	D	As producers, because they assist in the circulation of money.

• A rubber balloon inflated with hydrogen is released from the earth's surface. As it rises it increases in size and finally bursts. This is because:

(application)
- A The temperature inside the balloon increases.
- B The pressure of the air outside the balloon decreases.
- C The air outside gradually enters the balloon.
- D The increase in the temperature of the air outside the balloon causes the balloon to expand.
- E The changes in temperature outside the balloon weaken the rubber.

3. Clarification/Matching Pairs

Choose the letter heading which most appropriately answers the question. Each heading may be used once, more than once, or not at all.

A	Aluminium	1. Which one is a non metal...
B	Copper	2. Which one is normally stored underwater...
C	Phosphorus	3. Which one is the most electropositive...
D	Sodium	4. Which one forms a black oxide...
E	Zinc	

4. **Multiple Completion/Selection**

Which of the following are insects?

1. ants 2. spiders 3. flies 4. mice

- A 1 2 3 4
- B 1 2 3
- C 1 2 4
- D 1 3 4
- E 3

5. **Proper Sequence**

Which one of the following lists the animals in order of the size of normal adults?

- A elephant, cow, rabbit, goat
- B cow, elephant, rabbit, goat
- C elephant, cow, goat, rabbit
- D cow, elephant, goat, rabbit

6. **True/False**

Kenya borders on:

		True	False
A	Malawi	❑	❑
B	Zaïre	❑	❑
C	Tanzania	❑	❑
D	Uganda	❑	❑

7. **Assertion/Reason**

A ship floats with a smaller volume submerged in sea water than in fresh water when carrying the same load *because*

the density of sea water is greater than that of fresh water.

SELECT
- A If both statements are true and the second is a legitimate explanation of the first.
- B If both statements are true and the second is NOT a legitimate explanation of the first.
- C If the first statement is true and the second false.
- D If the first statement is false and the second true.
- E If both statements are false.

8. **Attitude Measuring Questions**

Most commonly Likert-type scales (with statements and four of five responses of the agree-disagree type) are used though there are alternative techniques, e.g.
(1) Most of the things I learn in Science lessons I find interesting.
- Strongly agree
- Agree
- Undecided
- Disagree
- Strongly disagree

(2) I like Science practicals more than Science theory periods.

It is good practice to include both positive and negative statements relating to the same idea to provide a balance in the format of items. It is also preferable to have several items on the same theme so that it is possible to form a scale for a particular attitude by aggregating responses. This is likely to provide a more reliable measure than single items.

9. The following items are presented for criticism

1. How many colours are there in the rainbow?

A	1
B	3
C	5
D	7
E	15

2. Archimedes' principle states that
A For every action there is an equal opposite reaction.
B Objects less dense than water float.
C Plug vortices are anticlockwise in the Northern Hemisphere.
D Gold is heavier than silver.
E When a body is immersed in a liquid the upthrust is equal to the weight of liquid displaced.

3. The apparatus shown below was set up and after a few hours in sunlight, it was observed that some gas was collected in the test tube.
When the gas was tested with a glowing splint, the splint was rekindled.

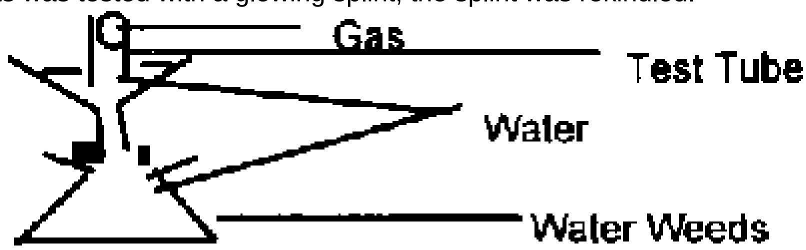

This experiment shows that in sunlight the water weed
A Produces carbon dioxide
B Produces oxygen
C Produces hydrogen
D Respires
E Transpires

4. Physiology teaches us that
A The development of vital organs is dependent on muscular activity.
B Strength is independent of muscle size.
C The mind and body are not influenced by each other.
D Work is not exercise.

5. In the definition of a mineral which of the following is incorrect? A It is produced by a geological process. B It has distinctive physical properties. C It does not contain more than one element. D Its chemical composition is variable.

6. Meat can be preserved in brine because A Salt is a bacterial poison. B Bacteria cannot withstand the osmotic action of brine. C Salt alters the chemical composition of the food. D Brine protects the meat from contact with the air.

7. What does the term growth mean? A Maturation B Learning C Development D Gauche E None of these

8. What is the best definition for a vein? A A blood vessel carrying blood going to the heart. B A blood vessel carrying blue blood. C A blood vessel carrying impure blood. D A blood vessel carrying blood away from the heart.

Checklist of Use in Constructing Multiple-Choice Objective Questions

(see Ebel/Frisbie (1991) Essentials of Educational Measurement)

1.	Multiple-choice test items should be based on sound, significant ideas that can be expressed as independently meaningful propositions.
2.	The wording of a multiple-choice item should not follow familiar textbook phraseology so closely that verbal memory without comprehension will provide an adequate basis for response.
3.	Giving the final examination as a pretest will help to identify items that can provide valid measures of specific achievements in the course.
4.	Drafting each multiple-choice item in pencil and double spaced on a separate sheet of paper will facilitate revision of the item and its assembly into the test.
5.	The stem of a multiple-choice item should state or clearly imply a specific direct question.
6.	Item stems including the word»not«and asking in effect for an incorrect answer tend to be superficial in content and confusing to the examinee.
7.	The responses»none of the above«and»all of the above«are appropriate only when the answers given to a question are absolutely correct or incorrect (as in spelling or arithmetic problems).
8.	The intended answer should be clear, concise, correct, and free of clues.
9.	All of the responses to a multiple-choice test item should be parallel in point of view, grammatical in structure and general appearance.
10.	The distracters in a multiple-choice item should be definitely incorrect but plausibly attractive to the uninformed.
11.	The use of compound responses, including an answer plus an explanation, or some combination of two elements, sometimes solves the problem of providing four good alternative answers to a multiple-choice test question.
12.	While most multiple-choice items provide at least four alternative answers, good ones can be written with only two or three alternatives.
13.	A student who selects the correct response to a multiple-choice item by eliminating the incorrect responses demonstrates useful achievement.
14.	To function properly a multiple-choice item must be expressed in carefully chosen

	words and critically edited phrases.
15.	In general the best multiple-choice test items are those that about half the examinees answer correctly.
16.	One can make some multiple-choice items easier by making the question more general and the responses more diverse, or harder by making the question more specific and the responses more similar.
17.	Subsequent, and preferably independent, review of the drafts of multiple-choice test items is likely to improve their quality.
18.	Some of the most effective multiple-choice test questions call for a best answer rather than an absolutely perfect correct answer.
19.	Items testing recall of incidental details of instruction or special organizations of subject matter are ordinarily undesirable.
20.	The stem of a multiple-choice item should be expressed as concisely as possible without sacrificing clarity or omitting essential qualifications.
21.	The responses to a multiple-choice item should be expressed simply enough to make clear the essential differences among them.
22.	True statements that do not provide good answers to the stem question often make good distractors.
23.	The responses to a multiple-choice item should be listed rather than written one after another in a compact paragraph.

Reporting Test Results

Testing may have many purposes. The most appropriate form in which to report results depends partly on the purpose for which they have been collected. In brief reporting raw score marks with no additional information has little value particularly where such marks appear individually. Useful characteristics of performance to consider communicating may include:

- Arithmetic Mean of Marks

This at least provides a reference point against which to judge performance indicated by raw scores. It is unreliable in many ways but better than nothing. It may be considered as providing a test facility index.

- Range of Marks

Though a test may be marked out of 100 only 30% of the mark range may be used, e.g. minimum mark 40, maximum mark 70. This is important if any comparisons or aggregations are subsequently performed.

- Dispersion of Marks

Standard deviation is one indicator of this and is most simply defined as:

$$\text{The square root of} \quad \frac{(\text{the sum of each deviation})^2}{(\text{the number of cases})}$$

$$\text{i.e. Standard deviation} = \sqrt{\frac{\sum(X_1 - Xav)^2}{n}}$$

The magnitude of this is an indication of the spread of values. Its meaning becomes difficult to interpret where mark distributions diverge considerably from a normal distribution.

- Frequency Distribution of Marks and Percentile Ranks

By calculating the frequency with which marks are obtained and producing a table of cumulative frequency, percentile ranks can be obtained. A candidate’s score can then be reported in a form that relates performance to that of other candidates (see the example given in Table 6).

Table 6: Test Results (75 Candidates, Mark Range 1 to 10)			
Score	**Frequency**	**Cumulative Frequency**	**Cumulative Percentage**
10	5	75	100
9	2	70	93
8	12	68	90
7	17	56	75
6	14	39	52
5	10	25	33
4	10	15	20
3	3	**5**	7
2	0	2	3
1	2	2	3
0	0	0	0
	75		

Thus, a student with a raw score of 5 has a percentile rank of 33, i.e. approximately 2/3 of the students score approximately 1/3 less. Large percentile differences near the 50th percentile or median score may represent small raw score differences and small percentile differences at the top or bottom of the range may represent large raw score differences. Percentile ranks cannot be added; they do provide comparison in terms of a reference group.

• A histogram constructed from the frequency tabulation of raw scores provides a useful diagrammatic representation of several test characteristics and is a valuable piece of information to provide. Its shape is a useful guide to the meaning of such statistics as the standard deviation etc.

• Profile Reporting

Where a test has several components which are intended to measure different types of performance, profile reporting may be appropriate. This involves reporting separately on different areas of skill or knowledge rather than reporting an aggregate mark derived from several Science tests which are directed towards measuring different characteristics. Aggregation may well degrade the quality of the information that can be provided if results in different areas do not inter-correlate. For example suppose we have the results of three Science tests:

Table 7: Marks on Three Papers of Science Tests				
Candidate	Paper I Recall of Information	Paper II Comprehension/Application	Paper III Practical Skills	Aggregate Mark
Kwasi	52	61	38	151
Kofi	37	41	72	150
Hamid	61	49	31	141
Nasreen	70	71	48	189
David	30	28	62	120

At a glance we can see that Paper III results do not appear to correlate positively with Paper I and II results. If we produce a single aggregate mark by addition we disguise useful information. Note that although Kwasi and Kofi have similar aggregates Kwasi has achieved his mainly through good performance on Papers I and II; Kofi, on the other hand, achieved his largely through a high score on Paper III. This clearly has implications for any individual attention that may be given to them to improve their performance as well as whether it is intended to allow performance in one area to compensate for that in others.

One way of reporting results like those above is to draw up a matrix of categories to provide indications of performance on different test types, e.g.

Name Kofi				Subject Science	
		Performance			
Recall of Information			X		
Comprehension/Application			X		
Practical Skills				X	
	Well below average	Below average	Average	Above average	Well above average

This procedure is not perhaps valuable when marks between tests are highly correlated. However, high correlation between test marks on different tests designed to measure different capabilities does raise questions concerning whether they do in fact measure different things. A scattergram of marks obtained on two tests (or different parts of the same test) provides a simple diagrammatic indication of the extent of correlation between measures of performance on different traits. Several statistical methods for calculating such correlations are available. See for example:

Standardizing Test Scores

Simple addition of raw scores to produce aggregates for overall ranking can be very misleading. Table 8 and 9 show this.

Table 8: Raw Scores on Eight Tests

	Subject								Total
	A	B	C	D	E	F	G	H	
1. Kwasi	80	50	80	50	25	60	32	42	419
2. Kofi	95	70	15	80	40	40	30	48	418
3. Hamid	30	80	65	20	70	55	34	40	414
4. Nasreen	81	60	30	60	60	36	44	42	413
5. David	94	20	75	50	50	30	47	46	412
6. Kim	60	90	20	75	30	45	45	46	411
7. Naisun	100	40	40	70	20	40	52	48	410
8. Cream	10	75	50	55	30	60	56	45	381
9. Sam	31	30	60	70	48	35	55	50	379
10. Nona	80	10	50	25	30	70	50	55	370
11. Sharifah	20	80	50	30	40	55	60	52	367
12. Vina	70	25	10	50	40	50	55	60	360

Table 9: Scaled Scores on Eight Tests

1. Vina	67	19	0	50	40	50	83	100	409
2. Sharifah	11	88	29	17	40	63	100	60	408
3. Nana	78	0	57	8	20	100	67	75	405
4. Sam	23	25	71	83	56	13	83	50	404
5. Cream	0	81	57	58	20	75	87	25	403
6. Naisun	100	38	43	83	0	25	73	40	402
7. Kim	56	100	14	92	20	38	50	30	400
8. David	93	13	93	50	60	0	57	30	396
9. Nasreen	79	63	29	67	80	15	47	10	390
10. Hamid	44	88	79	0	100	63	13	0	387
11. Kofi	94	75	7	100	40	25	0	40	381
12. Kwasi	78	50	100	50	10	75	7	10	380

Table 9 indicates the results of applying a simple scaling correction for the range of marks used. Rank order is completely reversed.

$$\text{Scaled Score} = (\text{Raw Score} - \text{Minimum Raw Score}) \times \frac{100}{\text{Range of Raw Scores}}$$

This correction does not standardize the marks and give equal weightage to each component though it is a better reflection of relative performance than raw scores alone.

Standardization of marks on different tests to give equal weightage to all components is most simply accomplished by computing a corrected score that relates performance on each paper to the mean and standard deviation of marks obtained. A standard score or Z-Score can be simply derived

$$\underline{\text{Z} - \text{Score}} = \frac{\text{Raw Score} - \text{Mean Score}}{\text{Standard Deviation}}$$

$$= \frac{\text{Deviation of Raw Score}}{\text{Standard Deviation}}$$

This can be converted to a mark that does not go negative by employing an arbitrary scale with, for example, a mean of 50 marks and a standard deviation of 15.

The standardized mark then becomes

$$(\text{Z-Score} \times 15) + 50$$

Summing standardized marks of this kind does give equal weightage to each component score in terms of relative performance under certain conditions.

Suppose we have 5 candidates taking 3 papers and we want an indication of overall performance, weighting each paper equally. The aggregate and standardized aggregate scores are as shown below.

Table 10: Aggregate and Standardized Aggregate Scores of Candidates

Candidate	Paper 1	Paper 2	Paper 3	Aggregate	Rank	Standardized Aggregate	Rank
Kwasi	68	48	63	179	1	164	1
Kofi	60	74	43	177	2	151	3
Hamid	46	59	71	176	3	157	2
Nasreen	40	87	37	164	4	131	5
Kim	76	32	51	159	5	148	4
Mean Raw Score	58	60	53				
Standard Deviation	13.39	19.26	12.52				

Under certain conditions standardization can change the rank order of candidates when aggregate scores are compiled. It will almost certainly modify the magnitude of differences in relative performance. Standardization techniques of this kind are only really appropriate to large populations where distributions approximate a normal curve. They can themselves be misleading when applied to very skewed distributions.

2.3. Developing and Administering Tests in Primary Science and Agriculture - A Practical Exercise

Udo Bude & Keith Lewin

This chapter discusses the need to improve skills in the creation of assessment items used in primary school leaving examinations in Africa. The first section provides a rationale for the importance of this kind of activity. The second gives an overview of a workshop process that we have found useful in encouraging reflection and developing skills. It includes examples of workshop tasks which provide a condensed experience of the test construction, review, administration, analysis and revision process based on material used in the workshop held in Nyeri in Kenya in 1994. The test instrument created was piloted in Kenyan schools. Results were analysed using simple techniques to provide a basis for appraisal of performance characteristics and quality of the items that had been generated.

The need to improve the quality of test and examination questions is well established. Studies in Africa from the early 1980s and before attest to great variations in the technical attributes of test items between countries, the importance of examination content in influencing teaching and learning, and the possibility that existing procedures and instruments may lack adequate reliability, validity and curricula relevance. (ILO/JASPA 1981; Somerset 1982; Oxenham (ed.) 1984; Somerset 1988; Kellaghan and Greaney 1992). In this section we focus especially on the construction, analysis, and review process for multiple-choice styles of test construction. This is not because they are the only or perhaps the best way of assessing achievement at the end of the primary cycle. It is because they are indeed the most widely used style of test construction at this level. They offer advantages of cost, convenient administration, wide sampling of the curriculum, reliable marking, and convenient statistical methods of checking for some types of fraudulent behaviour. The well-known limitations include the inability to assess some types of valued outcomes, uncertainties over how correct responses are generated, influences on the curriculum in action that may discourage some types of classroom activity, and the risk that school achievement is narrowly defined by performance on them. The advantages can only be realised where technical quality is high, administration is efficient and honest, and item writers can set questions which span an appropriate range of cognitive outcomes. The disadvantages are also limited where these conditions are satisfied. This is why adequate training and support for those who become item writers is needed.

Many of those who become test constructors have backgrounds and experience that only prepare them partially for the demanding roles that they are required to play. They may have taught for many years in the school system at a particular level and find themselves required to examine at other levels (especially the case with primary school leaving examinations which are often constructed by those whose teaching experience is at secondary level). They may have worked in different parts of the Ministry of Education unrelated directly to examining and test construction as administrators, or inspectors. Even those with a background in curriculum development are unlikely to have a significant amount of specialised training in examination construction. A wide range of skills are needed for effective test construction. These include a sophisticated awareness of children's thinking in Science at different ages and the ability to translate this into questions which have appropriate levels of cognitive demand and are expressed using language structures that are accessible to children (especially the case where the medium of instruction is not the mother tongue). It is also important to have detailed knowledge and understanding of the curriculum and its intended learning outcomes, preferably based on the experience of teaching the relevant curriculum at an appropriate level. Statistical competence is essential if quantitative data on performance is to be interpreted meaningfully and pilot studies used to improve item performance against explicit criteria. Skill in deciding what balances should be struck between the demands on examinations to provide valid and reliable data for selection, to certify competencies against known standards, and to use the power of examinations to influence learning and teaching and support the achievement of curricula goals.

African examination authorities have become more and more aware of the need for systematic staff development to develop necessary skills and in many cases donors have assisted in supporting training programmes for staff. Though the picture is changing it is still all too frequently the case that the construction falls short of the standard that pupils and parents have a right to expect and governments need to have confidence in results that determine life chances and underpin quality improvement in education and increased levels of achievement. Any strategy that attempts to improve matters must depend on a mixture of in-house training and support, mutual assistance between examining authorities across Africa which can share expertise and training opportunities and access to external knowledge and expertise which reflects the most recent developments in the field.

The material presented in the rest of this chapter provides a basis for training and development exercises that can be mounted at within countries and at regional level and can readily be adapted to reflect specific demands of particular national systems. Thus, though we have chosen to base this exercise on the Kenya Std. 7 syllabus for Science and Agriculture, this was only chosen for reasons of expediency given that the practical application of the trial test materials was in Kenyan schools.

The Overview which follows explains step by step common procedures followed in the writing of items which can be used to develop a trial test paper of any number of items. It explains the process through which the pilot instrument was tried out in six schools, the results statistically and judgementally analysed, and the process of critical review that followed. In reality a revised test instrument would then have been designed and re-piloted to improve the quality of the test.

The item writing task is made up of a number of sections denoted **Information** and **Assignments.** Short summary contextual information is provided in the Information briefs which prepares the ground for the Assignments, each of which defines a task to be undertaken in groups. The trial test paper that was produced is then reprinted in full. Each group administered the test according to an agreed procedure that arose from discussion of good practice. This included standardised administration conditions, subsequent interviews with relevant teachers which were written up commenting on opinion concerning the quality and relevance of the items in the test instrument, and reflections on the administration of the test in relation to ideal conditions. Test data was then analysed manually by the groups. This was deliberate to ensure deeper understanding of the process than would be the case if results were simply entered into a computer to generate item statistics that might not be understood at all. The groups were then invited to reach judgements on the performance of the items based on the data generated. This was particularly fruitful when outcomes were compared with anticipated characteristics of performance challenging groups to explain why patterns emerged that they had not expected (thus some items were easier than anticipated and some more difficult, some differentiated more strongly between boys and girls than others in ways which were not predicted).

The tasks we have devised are designed to make use of the previous experience of participants. We deliberately tried to include in the groups individuals from an examination department background and those who had experience of curriculum development. It was also useful to spread subject expertise in the groups across the life and physical sciences.

In summary the process outlined below consists of:

- Basic Information Sheets containing information relevant to each task (Overview, Info 1)

- Assignment sheets specifying group activities used in construction, administering and analysing tests (Assignment 1, Infos 2-4)

- Test item development procedures (Assignments 2-4, Info 5)

- Item prediction (Assignment 5)

- Trialling in schools (Assignment 6, Test Administration)

- Marking procedures (see Marking Scheme for the Test Paper)

- Analysis of Items (Assignment 7, Infos 6 and 7)

At the end of this chapter some conclusions are reached on the further development of tests and enhancements to the workshop process.

2.3.1. The Item Writing Task

OVERVIEW

The task is to create a 30 item test which will be set in six local schools. The work will be organized in three working groups. Each group will produce ten to fifteen items. The specification for the items is as follows:

1. Items should relate to the following Topic Areas in Grade 7:

Science	**Agricultural Science**
Living Things Properties of Matter Weather Making Work Easier	Soil Conservation Diseases and Pests Simple Farm Accounts

Note: Read Info 1: Primary Education Syllabus, Kenya, May 1992

2. All items should be above the level of knowledge recall and recognition, i.e. at least comprehension or application level.

3. Each group should produce a total of 10-15 items, at least two of each category which assess learning outcomes related to:

→ Observation - skills of looking and seeing
→ Classification - skills of categorising cases according to rules
→ Measurement - skills of deciding how or what to measure
→ Recording Data - skills of deciding how to record data
→ Interpretation of Data - skills of interpreting data e.g. graphically

4. The procedure will be as follows:

→ all individuals draft at least two items after agreeing with group leader which areas they will cover to avoid unnecessary duplication;

→ each individual discusses each item written with other members of the group and revises the items;

→ group and group leader review all items produced to arrive at a list of about 10 items covering the curriculum areas identified above in Science and Agricultural Science;

→ each group constructively reviews work of other groups to improve items;

→ final list of items constructed;

→ 30 item instrument applied to pupils in six schools;

→ test papers marked by each group for the pupils tested (i.e. each group marks two schools only);

→ facility values and discrimination index calculated for each item;

→ each group reviews results on technical and other criteria;

→ summary report written commenting on items.

5. Test administration will take place in six schools - two high achieving, two average, two low achieving. Each group will be responsible for administering the test in two schools.

6. Each group will split into two sub-groups - one for each school visited. One member will make sure the items are administered effectively and answer any questions about the test. Other group members should prepare a semi-structured interview schedule to ask about assessment issues e.g. items on last years Primary School Examination e.g. which type of item pupils found most difficult/easy? Why? Which were»unfair«? Which did girls do best/worst? How do teachers prepare pupils for the examination? The visit should include reviewing pupils' work books and establishing which text books are available and how they are used. If possible, examples of test questions used by teachers should be collected.

7. Group leaders will organize the marking and simple statistical analysis and take responsibility for coordinating the production of a short written report.

8. Proposed Timetable

→ DAY 1	
am	Task introduction/
am	Writing individually
pm	Peer critiques/
pm	Item revision
→ DAY 2	
am	Group critiques of items/Revision
pm	Draft selection and compilation
→ DAY 3	
am	Inter group item critiques/Final selection
am	Interview preparation
pm	Production and copying/
pm	Predictions of item performance
→ DAY 4	
am	Administration and interviewing in schools
pm	Discuss and write up interview notes
→ DAY 5	
am/	Marking and statistical analysis
pm	
→ DAY 6	
am/	Analyses and report writing
pm	
→ DAY 7	
am	Reporting/Discussion of findings

*Info 1: Primary Education Syllabus Kenya - May 1992 (abstracts)**

* from: Kenya Institute of Education (May 1992) Primary Education Syllabus. Vol. I. Ministry of Education. Republic of Kenya.

SCIENCE (abstracts)

STANDARDS IV-VIII

I. INTRODUCTION

The work contained in this syllabus is presented in form of units. The units for each class need not be dealt with in the order in which they are written. The teacher should feel free to tackle any unit as might be dictated by environmental conditions and/or children's interests.

The teacher should, at all times, realise that SCIENCE IS DOING not just being told and therefore pupils should be actively involved in learning.

The teacher should use a variety of teaching methods, for example, nature walk, group activity, project work, demonstration, and so on, in handling the content.

Pupils and teachers should collect most of the resource materials required. Other materials should be constructed by pupils under the guidance of the teacher.

II. AIMS OF SCIENCE TEACHING

The main aims teaching Science in primary schools are:

1. To enable children to acquire and preserve certain useful ATTITUDES about themselves and their relationship with the environment.

2. To enable children to acquire a basic scientific KNOWLEDGE.

3. To enable children to acquire certain manual and thinking SKILLS which are useful in solving practical problems.

III. GENERAL AND SPECIFIC OBJECTIVES

At the end of the course the learners should be able to:-

1. Apply a problem solving approach to all investigations.

Specifically the learners should be able to:

(a) Identify problems, design investigations, examine evidence and take responsibility for their own learning.

(b) Demonstrate the skills of observation classification, measurement, recording, communication, making predictions, formulating hypotheses from evidence.

(c) Analyse cause and effect relationships, control variables and draw rational conclusions.

(d) Recognise the relevant information required to solve a particular problem.

(e) Use a variety of sources for acquiring any necessary information.

(f) Put in order the information gained during their study of science.

(g) Seek new ways of finding further information.

(h) Demonstrate feelings of self-confidence and a sense of working together.

2. Identify the major factors of, and develop and use appropriate skills and technologies for solving the problems relating to:-

(a) Conservation and utilisation of energy and other resources.

Specifically the learners should be better able to:-

(I) Observe and record how plant, animal, and human resources are used in their community.

(II) Devise other methods of utilising the above resources.

(III) Observe and record various sources and uses of energy.

(IV) Observe and analyse methods of conserving energy in the community.

(V) Make simple machines that make work easier.

(b) Use of communication.

Specifically the learners should be able to:-

Communicate using a variety of techniques e.g. writing, drawing, modelling, graphing, sketching and making charts, oral (debates, interview, discussions, drama), listening and interpretation of information.

(c) Public health and hygiene in the community.

Specifically the learners should be able to:-

(I) Practise care when handling medicines.

(II) Discuss dangers of drug abuse.

(III) Prevent drug abuse by educating self and others.

3. The learner should be able to collect, record, interpret and communicate for rational decision making.

This objective has no specific objectives. Rather it will be achieved through work in all other objectives.

4. The learners should be able to develop flexibility and adaptability in solving problems.

Specifically the learners should be able to:-

(a) Develop a willingness to listen.

(b) Develop a feeling of concern, care and consideration for others.

(c) Accept new ideas.

(d) Experiment with new ideas.

(e) Co-operate in group activities (family, class and community).

(f) Accept and participate in desirable cultural activities and practices.

(g) Share new ideas in the family, class and community.

(h) Educate family and community on these values and importance of new ideas.

(i) Adjust to new changes in the environment,

(j) Demonstrate honesty, patience and accuracy in solving problems,

(k) Recognise the need for flexible planning.

5. The learners should be able to adopt solutions to problems of management and conservation of available resources.

Specifically the learners should be able to:-

(a) Identify various human resources available in the community.

(b) Relate use of resources for meeting family needs to values, goals, standards and available resources.

(c) Consult with local experts when solving problems.

(d) Plan and use labour saving devices to save time and energy.

(e) Analyse and encourage recreational activities conducive to good physical and mental health.

(f) Make economic contribution to the individual and the community.

6. The learners will be better able to promote, preserve and evolve their national heritage for their cultural, spiritual and economic development.

Specifically the learners should be able to:-

(a) Make excursions to places of national cultural and scientific interest.

(b) Use their required scientific skills and knowledge to re-design and improve traditional tools and implements.

(c) Investigate the scientific validity of traditional beliefs and practices.

(d) Acquire a balanced perspective on such beliefs and practices.

(e) Take independent decisions when confronted with conflicting viewpoints arising from such beliefs and practices.

(f) Discourage those beliefs and practices which are detrimental to community health, spiritual well being and economic development.

7. The learners will be better able to identify and utilise opportunities for productive work in the home and the community.

IV. SUMMARY OF CONTENT

Standard Four:	Weather and Astronomy, Living Things, Heat, Making Work Easier, Properties of Matter, Health Education, Soil.
Standard Five:	Living Things, Soil Balancing and Weighing, Heat, Sound, Properties of Matter, Health Education.
Standard Six:	Weather, Living Things, Environment, Properties of Matter, Electricity, Making Work Easier, Health Education.
Standard Seven:	Weather and Astronomy, Living Things, Environment, Soil, Properties of Matter, Electricity, Making Work Easier, Health Education.
Standard Fight:	Living Things, Environment, Properties of Matter, Energy, Light, Making Work Easier, Health Education.

STANDARD SEVEN

Unit 1: Weather

(I) Constructing weather measuring instruments

- rain gauge
- wind vane
- wind sock

- liquid and air thermometer

Unit 2: Living Things

(I) Inter-dependence between:

- plants
- animals
- plants and animals

(II) Blood circulatory system

- heart
- blood vessels
- blood

(III) Importance of blood circulation

(IV) Composition of blood

- plasma
- blood cells
- platelets

Unit 3: Environment

(I) State the meaning of environment

(II) Describe components of the environment

(III) Pollution in:

- soil
- water
- air

(IV) Conservation of:

- soil
- water
- air
- plants
- animals

Unit 4: Properties of Matter

(I) States of matter (atoms and molecules should NOT be mentioned)

(II) Changes of state e.g. water to vapour

(III) Comparing weights of equal volumes in different substances

(IV) Density: Activities to demonstrate

- Units of density (No calculation of density required)

(V) Composition of air

Unit 5: Electricity

(I) Electric circuits in series and parallel using

- batteries and bulb (Ohm's Law not required)

Unit 6: Making Work Easier

(I) Motion

- making things move
- stopping moving objects

(II) Describe what force is

- mention units of force (No calculations required)

(III) Describe what friction is

- state advantages and disadvantages of friction
- reducing friction

(IV) Making work easier using levers e.g. wheel barrow

(V) Identifying positions of:

- fulcrum
- load
- effort

Unit 7: Health Education

Drug Abuse

(I) The health, social and economic implications of abusing the following drugs:

- tobacco
- alcohol
- miraa (khat)

(II) Demonstrate the effect of cigarette smoke on a piece of wet white material.

AGRICULTURE (abstracts)

I. INTRODUCTION

This course is designed for upper primary classes starting at Std. IV. The pupils are expected to have gone through the integrated Lower Primary Science Course as a foundation upon which this course shall be built.

By Standard IV, it is expected that the pupils will have developed to a stage where they can be introduced to practical Agriculture.

The course is designed to help both the pupils who will end their formal education at K.C.P.E. level and also for those who will go for further education. For this purpose, the course is meant to give pupils a foundation for real life agriculture if they take farming after school and also for further agricultural education in post-primary institutions.

The following are proposed guidelines which will help the teacher to organize and teach Agriculture.

1. Scheming

The teacher who will handle this subject should be familiar with local environmental changes and when they occur. This is important so that projects may be well timed to concur with these changes. Teachers also should as much as possible see that they relate the school activities with those being carried out in the community e.g. weeding - when the local community is weeding their crops....

2. School Shamba

In many instances, pupils' interest towards Agriculture is killed through use of school garden as a place of punishment. The garden should be looked upon as a place of learning, a laboratory to carry out experiments and a resource for ideas.

II. OBJECTIVES OF PRIMARY SCHOOL AGRICULTURE

1. To demonstrate through practical experience that agriculture is a profitable and honourable occupation.

2. To create awareness of the importance of agriculture in the daily life of various communities and Kenya as a whole.

3. To assist the pupils practically acquire agricultural knowledge and skills which are relevant and useful to their lives.

4. To stimulate genuine interest and develop positive attitudes leading towards active participation in agriculture.

5. To ensure that the schools take an active part in rural development by integrating agricultural activities in the school curriculum.

6. To develop self reliance, resourcefulness, problem solving ability and occupational outlook in agriculture.

STANDARD SEVEN

Unit 1: Diseases and Pests

(a) Crop Pest and Diseases

(I) Observing and identifying the differences between healthy and unhealthy crops.

(II) Identifying common symptoms of various diseases and pests on crops.

(III) Identifying nutrient deficiency in crops.

(IV) Finding information on and practising methods of control and treatment of the common diseases in crops.

(V) Methods of maintaining soil fertility.

(b) Livestock Diseases and Parasites

(I) Observing and identifying the differences between healthy and unhealthy animals.

(II) Identifying symptoms of various diseases and parasites on animals.

(III) Finding information and practising methods of control and treatment of the various diseases and parasites in livestock.

Unit 2: Animal Feeding

(I) Discussing the constituents of balanced diet e.g. carbohydrates, proteins, vitamins, mineral salts, water.

(II) Identifying common feeds on the farm for feeding livestock.

(III) Identifying the nutritional deficiency symptoms in livestock.

(IV) Practising feeding the animals on school/home farm with balanced diet.

Unit 3: Soil Conservation

(I) Discussion on soil conservation methods.

(II) Visiting farms and identifying soil conservation methods used in the community.

(III) Practising some of the methods of soil conservation on school/home farm or garden e.g. mulching, cover cropping, terracing, contour farming, tree planting.

Unit 4: Fish Farming

(I) Finding information on the following:

- (a) siting a fish pond
- (b) construction of fish pond
- (c) type of fish kept
- (d) fish rearing, fish harvesting, fish preservation, fish marketing.

(II) Constructing a fish pond where possible.

(III) Rearing some fish in the pond.

(IV) Visiting some fish farms where possible.

Unit 5: Storage

(I) Studying the various methods of storage in the community both traditional and modern by visiting:

- (a) large/small scale farms
- (b) dairies
- (c) marketing boards' stores
- (d) co-operatives stores

(II) Discussing storage of farm produce, agro-chemicals.

(III) Observing and practising the methods used in keeping the stores clean, safe, dry and free from pests.

Unit 6: Youth Organizations

(I) Discussing the roles of youth agricultural organizations e.g. Young farmers Clubs, 4-K clubs (Kuungana, Kufanya, Kusaidia Kenya).

(II) The relationship of Y.F.C. to the Agricultural Society of Kenya.

(III) Identifying the roles of youths in these organizations at school, home and national level.

(IV) Participating in community projects which are agriculturally oriented e.g. construction of dips, water projects, freedom from hunger walks, national youth weeks etc.

(V) 4-K Club activities.

(VI) Participating in activities of agricultural organizations e.g. agricultural shows, farmers field days, etc.

Unit 7: Methods of Grazing

Discuss the following methods of grazing including their advantages and disadvantages.

(I) Rotational grazing

(a) paddocking
(b) strip grazing
(c) tethering

(II) Zero grazing (stall feeding)

(III) Herding

NB: Visiting local farms to see how these methods are carried out.

Unit 8: Simple Farm Accounts

(I) Discussing and identifying documents used in farm accounts.

(II) Importance of farm accounts.

(III) Discussing and identifying types of farm accounts.

Assignment 1: Basic Instructions

• 3 working groups - each group produces 10-15 items.

• All items should be above the level of recall and recognition.

• Items to cover topics and skills identified in table of specification.

• Each person drafts two multiple-choice items for different learning outcomes.

→ Items should have a key and three distractors.
→ Items should fit into half a page or less.
→ Art work should be sketched.

• Items should be reviewed by half groups and revised.

• Group leaders should coordinate production of items.

• Each item should indicate the name of the developer and the topic/skill areas intended.

REMEMBER THE ART WORK

IF STUCK LOOK AT RESOURCE MATERIALS AND DISCUSS WITH ANOTHER GROUP MEMBER/FACILITATOR!

EXAMPLES:

Table of Specification - Topics by Skills					
Content	**Observation**	**Classification**	**Measurement**	**Recording**	**Interpretation**
Living Things					
Properties of Matter					
Weather					
Making Work Easier					
Soil Conservation					
Diseases and Pests					
Simple Farm Accounts					

GROUP 1		
Name	**Topic**	**Skill**
1. Mwanza	Living Things	Observation
	Weather	Classification
2. Mariam	Soil Conservation	Measurement
	Properties of Matter	Interpretation
3. Grace		
4. Moshoeshoe		

Info 2: Advantages and Disadvantages of Multiple-Choice Questions

Multiple-choice questions require pupils to select the correct answer from among several options - typically options»A«through»D«or»True«and»False«. In other types of questions pupils construct their responses, in writing, speaking, or perhaps by creating a piece of art or music.

Multiple-choice question types can have a dramatic effect on what happens in the classroom. If the examination primarily contains items which have pupils selecting from among options, then pupils are likely to spend much of their time preparing for the test with worksheets in which they select the correct answer. This type of behaviour is less likely to help pupils make the extensive web of mental connections which help them to understand and use what they learn in school. However, multiple-choice questions are a very efficient way to measure a large body of knowledge and are likely to be an integral part of any test developed and used for large-scale testing.

Advantages	Disadvantages
• Because multiple-choice questions take little time to answer, a test can measure a broader range of content than is possible with a test which relies solely on essay items or performance tasks. • They are less costly to score. If specially prepared forms are used, they can be machine scored, allowing thousands of answer sheets to be scored in a very short period of time.	• It is more difficult to design multiple-choice questions which measure higher levels of thinking and problem solving. • It is more difficult to design questions which measure more complex, real-life types of skills and thinking. • They take more time to develop because of the need to construct four or five response choices. • Multiple-choice tests promote multiple-choice teaching -that is, teaching where students are always looking for the one right answer.

Advantages	Disadvantages
• They are an efficient way to measure recall of factual knowledge and some skills.	• There is a high chance of being able to get the correct answer by guessing, which is not the case with performance tasks or essays. If a multiple-choice question has four options, the student has a 25 percent chance of guessing the item correctly.

Note: This information is based on Capper, Joanne (March 1994) Testing to Learn... Learning to Test. A Policymaker's Guide to Better Educational Testing. Executive Summary. Academy for Educational Development, Washington D.C., p. 23.

Info 3: Format of Multiple-Choice Items

STEM	Pupils of Makumbe Primary School have observed for a number of years that their maize crops get damaged by strong winds.		
	What should they do to stop the damage in future?		
	A. Apply more fertilizers to their maize crop.	**X**	
DISTRACTOR	**B.** Grow a short maize variety.	**X**	OPTIONS (A-D)
	C. Intercrop maize with beans.	**X**	
KEY	**D.** Plant trees around their maize plot.	**X**	

NOTE:

• The stem should not test trivia.

• The stem should set an unambiguous task.

• The stem should not contain any kind of»cues«(hints, signals etc.).

• The stem and all options should be checked for reading level (especially if language of instruction differs from regional/local languages).

• The options should all be plausible, comparable and similar in essential particulars.

• Avoid grammatical clues in the options.

• The key must be absolutely correct.

• The distractors must be indisputably wrong.

Info 4: Suggestions to Consider in Writing Higher-Order Items

• Avoid questions that start with words such as who? what? when? where? These always solicit factual information.

• Use words like why?, because... These require students to reason.

• Give a set of conditions and ask the students to predict a future result.

• State a problem and ask the students to suggest a solution, e.g. separating salt from sand.

• Use as much stimulus material as possible, e.g. diagrams, pictures, graphs, tables. These are easier to set questions on than long winded statements.

• While thinking of the item to write, think in terms of problems to be solved rather than facts to be remembered.

• Always strive to use real life problems instead of abstract concepts.

PRACTICE MAKES PERFECT. KEEP ON TRYING. DO NOT GIVE UP

Assignment 2: Item Writing and Gender Aspects

Recent Curriculum Revisions/Reforms have introduced changes designed to make subjects like Science and/or Agriculture more relevant. An important aspect of this is to ensure that new courses are equally relevant to boys and girls. Items developed for examination need to be checked thoroughly for gender bias.

As the next step review the items developed so far in your working group and consider the following questions:

- Does the language used for the items show gender bias? (Is»he«used more than»she«, boys' names more than girls' names, first person or third person accounts of situations etc.).

- Do the items cover situations and topics likely to be of interest to both girls and boys and circumstances they have experience of? (Work environments, home life, school experiences).

- How many women/girls - men/boys feature in the items?

- Do illustrations show women/girls in a positive or negative way?

- Are there any differences between female/male illustrations? (Who is shown in a modern or in a traditional context. Who features in what kind of situations?).

- On which questions are boys likely to perform better; on which are girls?

- Do any items relate specifically to concerns likely to be of special interest and relevance to girls or boys? (infant care, child birth, inheritance, farming activities etc.).

Info 5: Gender Stereotypes in Science Teaching/Learning

Girls appear to underachieve in most scientific areas in comparison to boys in many countries in Africa, especially when their participation rates are taken into account.

This cannot be explained by biological or intellectual factors, but rather by peer pressure and cultural expectations which influence the design of school curricula, the nature of examinations, which may include items which favour boys rather than girls, and the way Science is taught in schools (some topics may be less interesting for girls; teachers reinforce stereotypes prevailing in society; boys receive more attention; textbooks contain gender bias etc.).

Working against Stereotypes:

- Given appropriate conditions girls achieve in Primary and Secondary Science as well as, if not better, than boys.

- Research has produced no reliable evidence that girls have less Science ability than boys have.

- When girls see that Science addresses their concerns and values they show just as much interest as boys do.

- When girls recognise that a problem relates to areas that are important to them, and they are free to include contextual aspects, they are able to produce valuable and realistic solutions to problems.

• Though differences may exist between boys and girls (e.g. in spatial awareness, verbal reasoning, numerical facility) they are small and may differ between populations, and are unlikely to have significant effects on school achievement in Science. Given time, girls can weigh up aspects of the complex problems they perceive and come to conclusions which they can justify.

• Girls have the same rights as boys to acquire relevant skills and understanding to serve as a base for citizenship and employment.

Adapted from: Harding, Jan (July 1992) Breaking the barrier. Girls in science education.

FOR FURTHER READING:

Eshiwani, G. (1988) Participation of Girls in Science and Technology Education in Kenya. Ann Arbor. Michigan State University (Working Paper 168).

Obura, Anna P. (1991) Changing Images. Portrayal of Girls and Women in Kenyan Textbooks. Nairobi/Kenya.

Tsayang, G.T. & Ngwako, A.D. et al. (eds.) (Sept. 1989) Gender and Education. Proceedings of a Workshop. Occasional Paper No. 2, University of Botswana. Gaborone.

Assignment 3: Individual Review of Test Items and Prediction of Outcomes

• In terms of difficulty (D)

• Discrimination (do the best students get the item correct?)

• Most powerful distractor

• Differences between boys and girls

Make a table of the following kind:

Item Number	Difficulty	Discrimination	Distractor	Gender Difference
1	H	L	A	B
2	M	M	C	G
3	L	H	B	B
4	M	L	A	G

H = High, M = Medium, L = Low
B = Boys>Girls G = Girls>Boys

Assignment 4: Further Review of the Draft Test

• Split into three groups.

• Analyse test items in sub-groups of two or three. Participants identifying key and the length of time to complete. Do not stop to argue. Note items where there is a problem.

• Meet in groups 1, 2 and 3. Return to problem items and suggest essential editing. Indicate items to be discarded. Write down suggested edits and pass on for correction. Each group concentrates on parts of the test:

For example:

Group 1 to concentrate on items 1-14.
Group 2 to concentrate on items 15-26.
Group 3 to concentrate on items 27-38.

Make suggestions on other items if more were produced and if there is time.

→ Check clarity of stem - can you understand what you are asked to do?

→ Is key clearly correct?

→ Are distractors suitably balanced?

→ Is diagram ok?

→ Is language ok? (Consider primary students' level of English).

→ Select the final 30 items for the **Test Paper.**

TRIAL TEST PAPER: Science and Agriculture (incl. Making Scheme)

Time: 1 hour

1. This booklet consists of 30 questions.

2. Write your name and the name of your school below

your name ____________________
name of your school ____________________

3. Indicate below by a tick (√) whether you are a boy or a girl

boy ( )
girt ( )

4. For each of the questions in this booklet four answers are given. The answers are lettered A, B, C, D. In each case only one of the answers is *correct.* Choose the correct answer and circle it using a pencil as shown in the following example:

<u>Example</u>

The process by which water is lost to the atmosphere from the soil is called

A. Condensation
B. Evaporation
C. Distillation
D. Transpiration

The correct answer B is circled, if you want to change the answer that you have circled rub it out and circle a new answer.

5. Answer ALL the questions

Note: This TRIAL TEST PAPER was developed by participants from Eastern and Southern Africa during a workshop on»Writing of Test Items for Primary School Leaving Examinations«, Nyeri/Kenya 1994, jointly organized by the German Foundation for International Development (DSE) and the Kenya Institute of Education (KIE).

1. Standard 7 pupils at Mathaithi Primary School studied and counted ants on a 4 square metre piece of land. They kept the following record for 9 days.

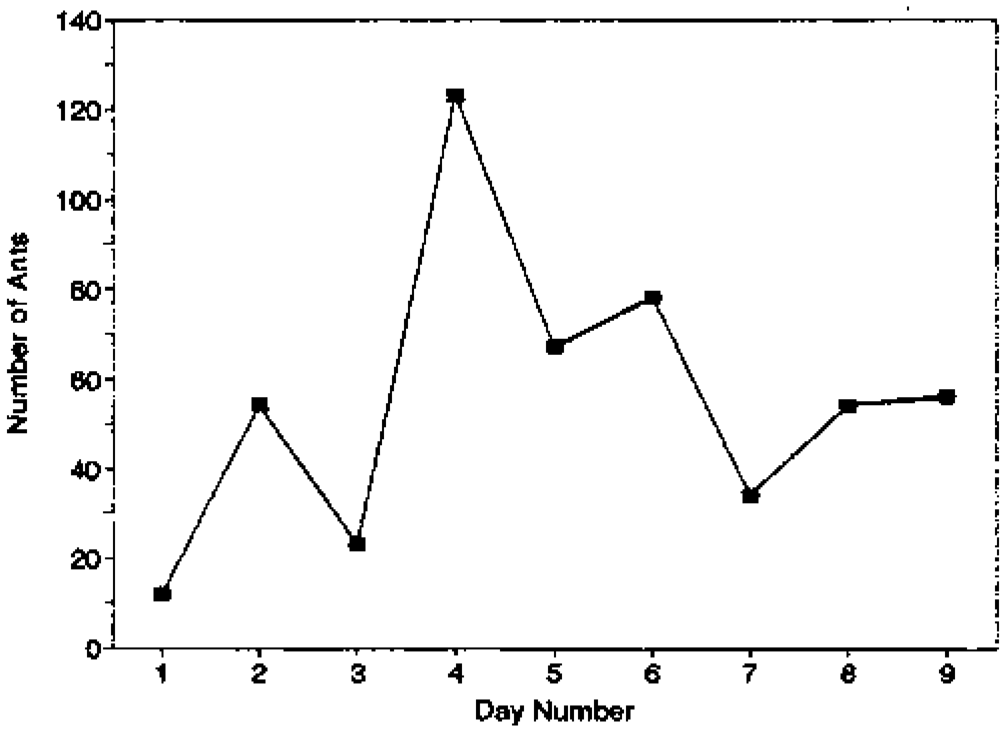

Number of Ants on Different Days

On which days did they find less than 50 ants?

A. Days l, 3 & 6
B. Days 3, 5 & 6
C. Days l, 3 & 7
D. Days 2, 4 & 5

2. Which one of the following weather instruments is INCORRECTLY matched with what it is used to measure?

	Instrument	Use
A.	Anemometer	Windspeed
B.	Thermometer	Temperature
C.	Hygrometer	Rainfall
D.	Barometer	Pressure

3. John planted some seedlings in pots as shown below.

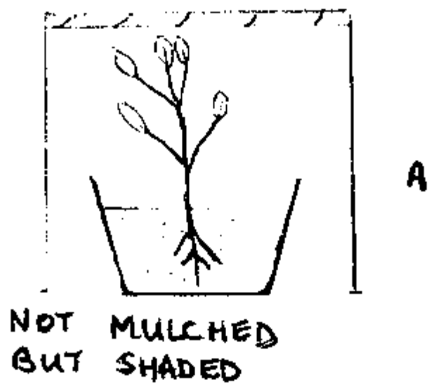

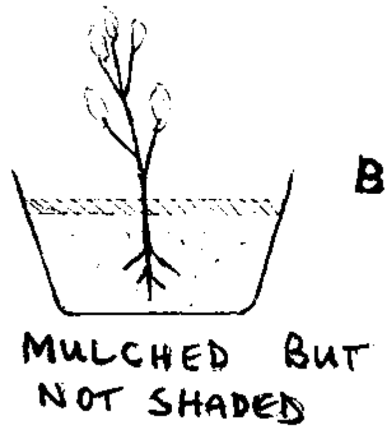

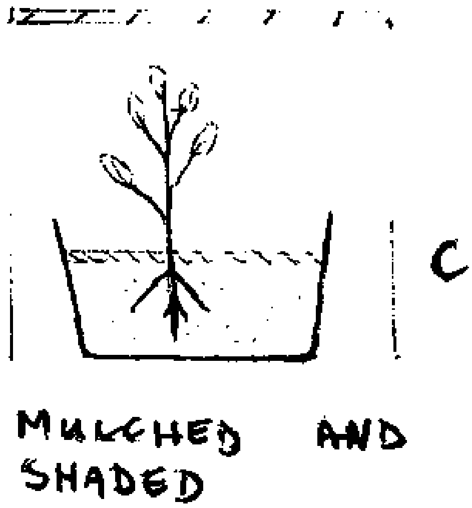

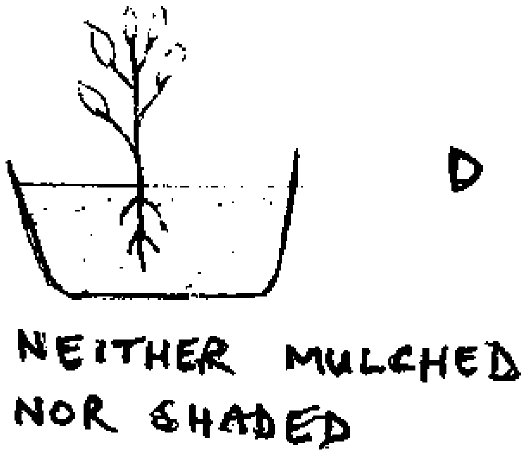

Which of the pots will conserve more water

A. Not mulched but shaded
B. Mulched but not shaded
C. Mulched and shaded
D. Neither mulched nor shaded

4. Look at the chart which gives the weather recorded by a Standard 8 class for a period of 5 days:

Day	Temperature	Humidity	Cloud/Sun	Rainfall
1	29°C	2 units	Half sun/half cloud	0 mm
2	19°C	8 units	no sun/full cloud	30 mm
3	20°C	6 units	half sun/half cloud	12 mm
4	28°C	2 units	sun	0 mm
5	30°C	1 unit	sun	0 mm

Which of the following conclusions are they most likely to have made?

A. Low temperatures, low humidity and some sun bring rain.
B. Low temperatures, high humidity and thick clouds bring rain.
C. Low temperatures and low humidity *bring* clouds.
D. High temperatures and high humidity bring some rain.

5. Look at these drawings of apparatus used to measure the weather:

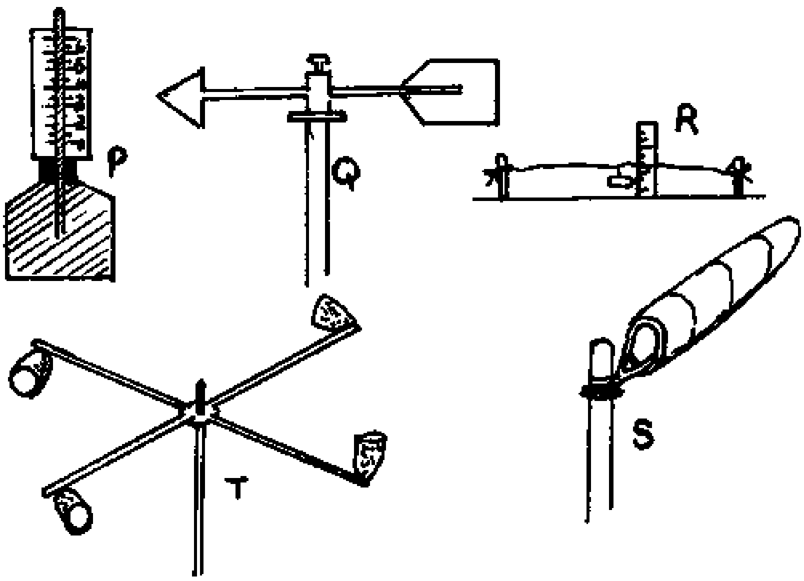

Which two items of the above apparatus measure the SAME weather characteristic?

A. P and R
B. Q and R
C. T and P
D. Q and S

6. Study this arrangement of a sealed, large transparent container:

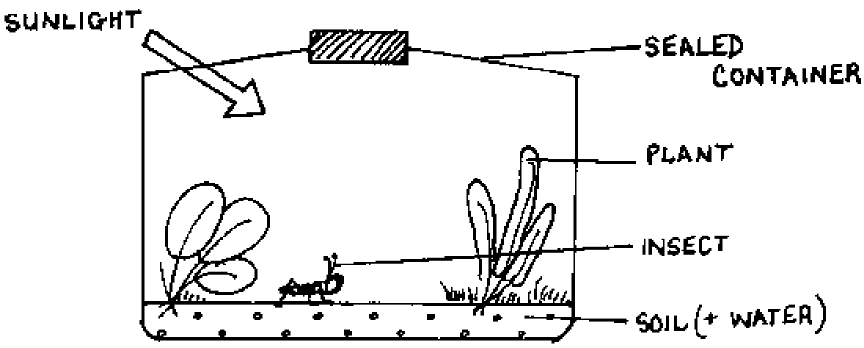

Select the <u>MAIN REASON</u> why these plants and the insect can live together (for some time) in the sealed container:

A. The insect may eat the plants.
B. The plants use the carbon-dioxide.
C. The plants recycle oxygen and water.
D. The plants use water.

7. The list below gives the methods commonly used to control soil erosion

i) mulching
ii) planting vegetation
iii) constructing gabions
iv) terracing

Which of these methods would BEST be used in an area with a gentle slope?

A. (i) and (iv)
B. (i) and (ii)
C. (ii) and (iii)
D. (ii) and (iv)

8. The diagram below shows Peter and Mary carrying out an activity to control animal parasites.

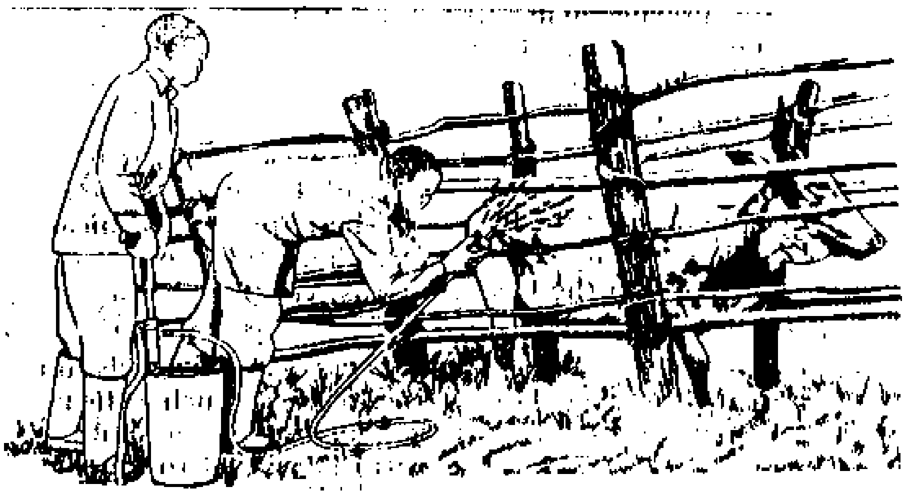

The parasite being controlled is most likely:

A. Flea
B. Tick
C. Tsetse fly
D. Wireworm

9. The leaves of most tea plants on a farm look pale yellow between the veins while the veins themselves are green. What is wrong with the tea plants?

They are:

A. deficient in nitrogen.
B. deficient in magnesium.
C. attacked by tea thrips.
D. deficient in calcium.

10. Which of the following sets of diseases is caused by the same type of organism?

A. cassava mosaic, tobacco mosaic and blight
B. blight, coffee berry disease and rusts
C. black rot, maize streak and bacterial wilt
D. blight, black rot and rusts

11. Study the bar graph below which shows the number of people who died from various diseases in country X and answer the question that follows:

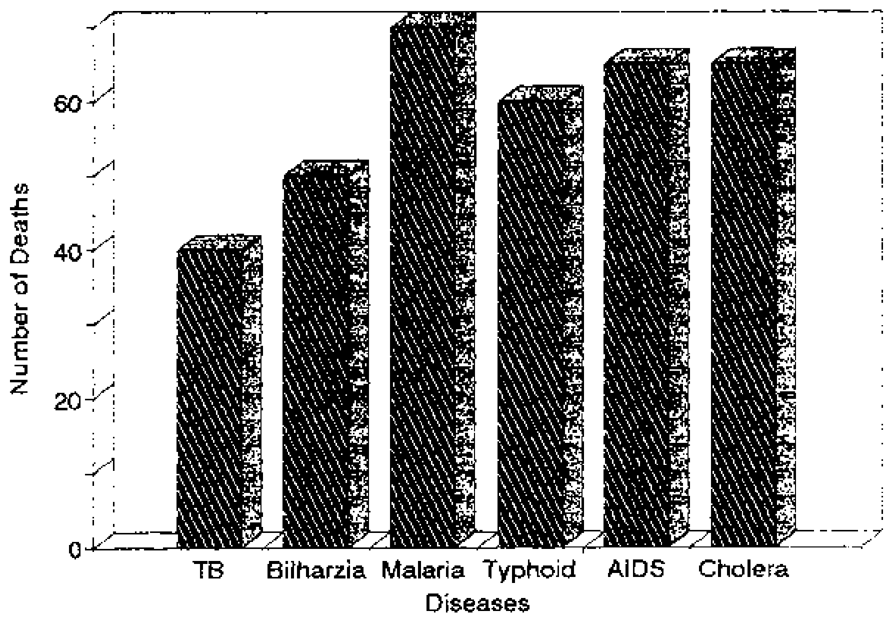

Deaths by Type of Disease

Which of the following is true according to the graph?

A. Tuberculosis (TB) and Cholera killed 120 people.
B. Bilharzia and Typhoid killed 120 people
C. Malaria and AIDS killed 135 people.
D. Cholera and malaria killed 140 people.

12. Diagrams P and Q show two men lifting two pails of equal weight up to the ceiling.

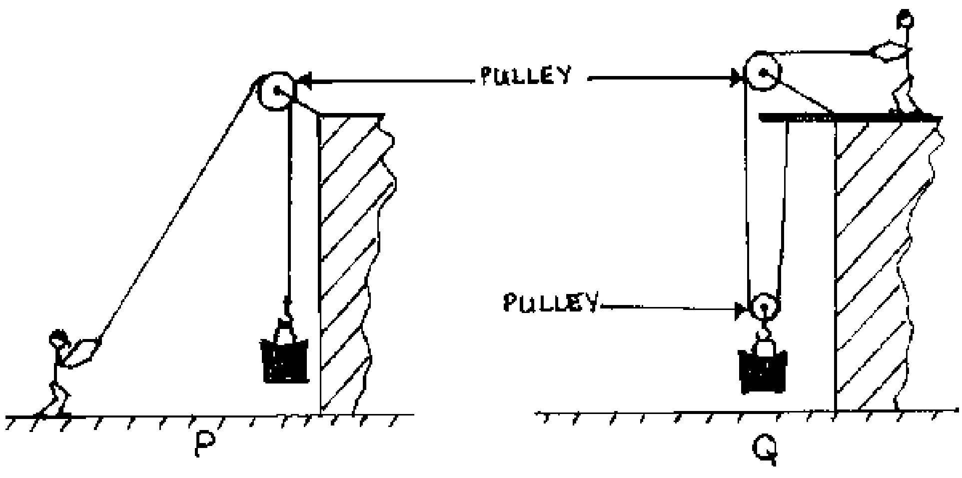

In which picture does the man have to pull less hard?:

A. P because he is on the ground.
B. Q because he is on the ceiling.
C. Q because he applies less effort.
D. P because he is pulling downward.

13. The table below shows an egg production record on Mr Kamau's farm in a certain week.

Day of the Week	Mon	Tue	Wed	Thur	Fri	Sat	Sun
Number of Eggs	60	56	65	63	67	55	60
Number of Damaged Eggs	7	2	11	9	12	0	6

If all the eggs were sold, on which days of the week did Mr Kamau get the highest returns?

A. Monday and Friday
B. Monday and Tuesday
C. Thursday and Saturday
D. Friday and Saturday

14. What would be the main aim of a farmer who plants maize in the first season, beans in the second season, and potatoes in the third season in his shamba?

A. To improve crop yield from an unproductive shamba.
B. To provide the farmer with a variety of crops.
C. To maintain a good crop yield without loss of soil fertility.
D. To select a crop most suited to the season.

15. In which of the following lever systems are the load, effort and fulcrum labelled correctly?

A

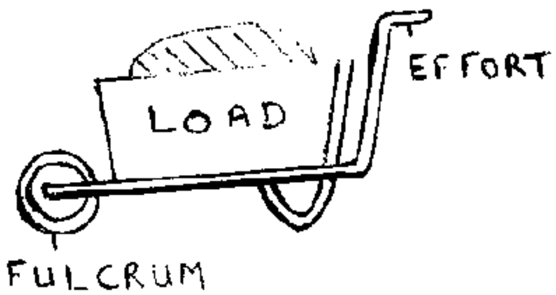

B

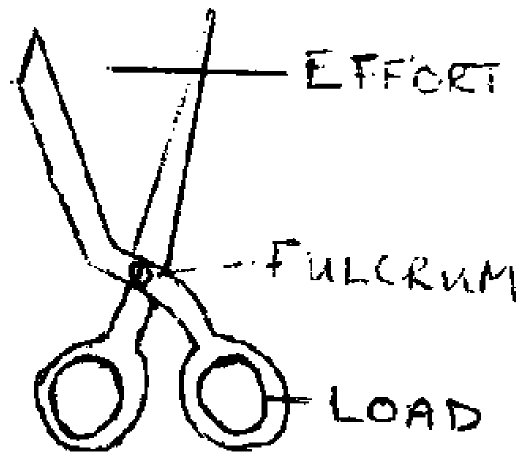

C

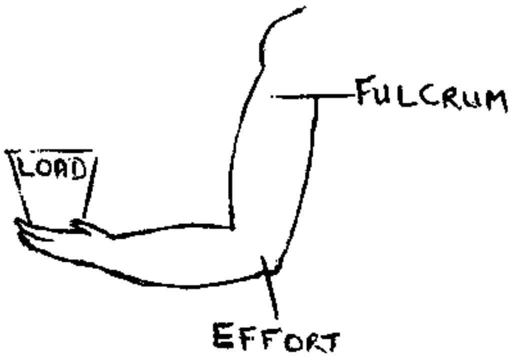

D

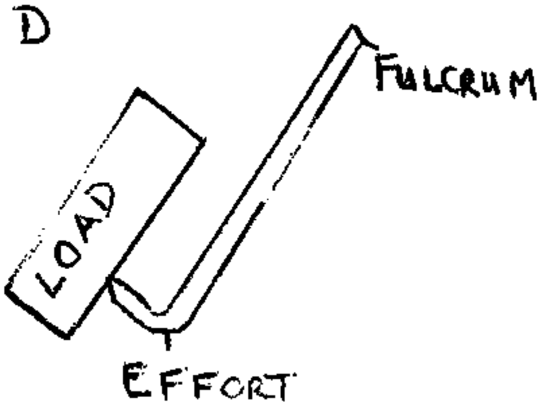

A.
B.
C.
D.

16. Maryam visits a farm where livestock are reared. She finds some of the cattle have watery eyes, hair loss on the tail end, and the abdomen and chest are swollen. Which disease are these animals likely to be suffering from?

A. Anthrax
B. East coast fever
C. Nagana
D. Foot and mouth

17. Below is a diagram of a certain insect. Which part is wrongly labelled?

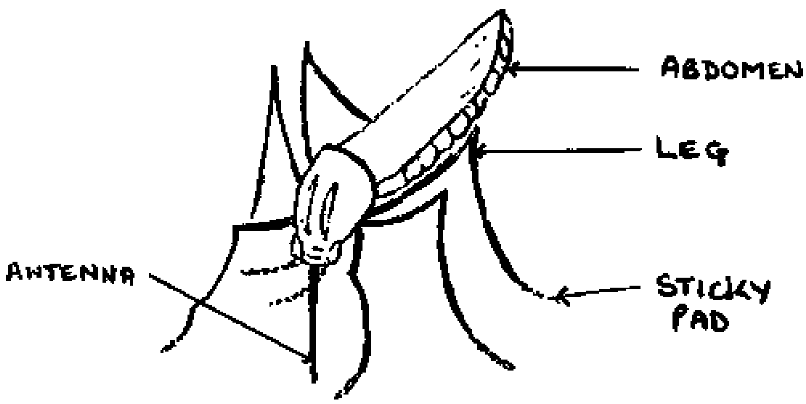

A. antenna
B. leg
C. abdomen
D. sticky pads

18. Below is a record of sales and expenses for Tofila's farm in November 1993

SALES

Date	Details	Amount
Nov 1	Sale of rabbits	600.00
Nov 12	Sale of carrots	350.00
Nov 25	Sale of Tomatoes	355.00

EXPENSES

Date	Details	Amount
Nov 5	Wages	400.00
Nov 12	Pesticides	140.00
Nov 25	Fertilisers	800.00

Which one of the following conclusions can correctly be made from the record?

A Tofila made a loss in November
B. Tofila made a profit in November
C. The sale of tomatoes could pay for fertilisers
D. Tofila neither made a loss nor a profit

19. Which of the following farm information is correctly matched?

	Farm Information	Farm Record
A	Types of diseases and parasites contracted by farm animals	Marketing
B	Prices of farm products	Health
C	Sales and expenses	Inventory
D	Farm yields	Production

A.
B.
C.
D.

20. Below are a farmer's income and expenditure records for the month of January, 1993:

Date	Details	Shs
18-1-93	Paid for clearing field	830.00
20-1-93	Paid for ploughing	1050.00
25-1-93	Bought 50 Kg maize seed	2000.00
26-1-93	Sold chickens	2300.00
28-1-93	Sold eggs	1000.00
29-1-93	Sold tomatoes	580.00

What conclusion can be made from these records?

A. The farmer made least profit from the sale of chickens during the month of January 1993

B. The farmer made more profit from the sale of eggs than from the sale of tomatoes during January 1993

C. The farmer neither made profit nor loss during the month of January I993.

D. The farmer incurred loss during the month of January 1993

21. Which of the following things are interdependent?

A	B	C	D
Cattle	Pitcher Plant	Locust	Oxen
Tickbirds	Weaver Bird	Ants	Farmers

A.
B.
C.
D.

22. Which of the following shows the correct order of changes in state when water at 20° C was first cooled to -10° C and then heated to 100° C?

A. Liquid → gas → solid → liquid
B. Liquid → solid → gas → solid
C. Liquid → liquid → liquid → liquid
D. Liquid → solid → liquid → gas

23. A measuring cylinder was filled with water to the 30 cm^3 mark. A glass cube of sides of length 2 cm was then lowered into the measuring cylinder. What was the final reading on the measuring cylinder:

A. 8 cm^3
B. 28 cm^3
C. 32 cm^3
D. 38 cm^3

24. A stone was slowly lowered into water in a measuring cylinder marked in cm^3. The water level was originally at the 15 cm^3 level. The diagram shows the stone in its final position.

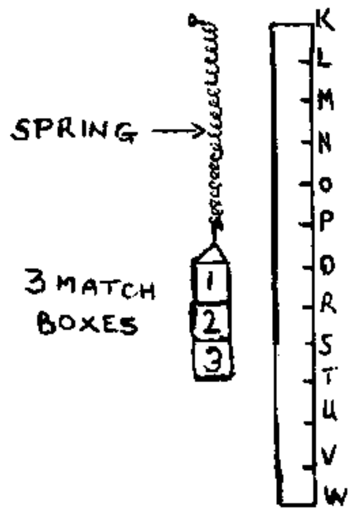

The volume of the stone was

A. 10.0 cm^3
B 7.5 cm^3
C 22.5 cm^3
D 15.0 cm^3

25. A spring of length KM will stretch to the position P when three identical matchboxes are hung at one of its ends as shown in the diagram

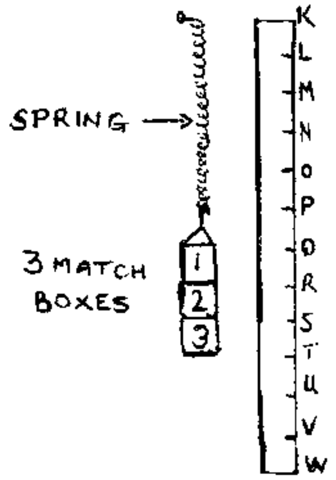

Which of the following statements points out what is likely to happen when a total of five identical matchboxes are hung at the end of the spring? It will stretch to position:

A. P
B T
C. U
D. V

26. Peter noticed that in his maize <u>shamba</u> some plants had large holes on the leaves and stem. The maize plants had most likely been attacked by:

A. Maize weevil
B. Grasshopper
C. Aphid
D. Stalkborer

27. Below are graphs showing the relationship between mass and volume of three different liquids X, Y Z. The formula for density is

$$\text{DENSITY} = \frac{\text{MASS}}{\text{VOLUME}}$$

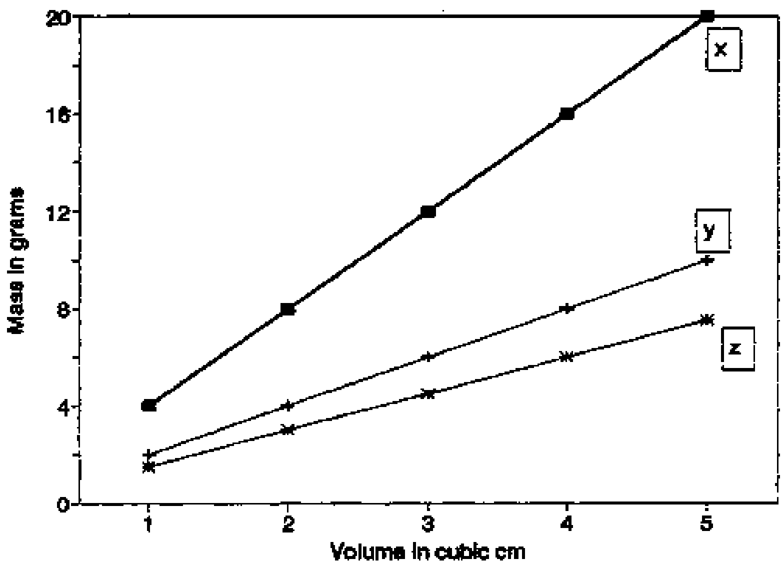

Mass of Liquid by Volume

These three liquids were poured into one bottle shaken and allowed to settle as shown below.

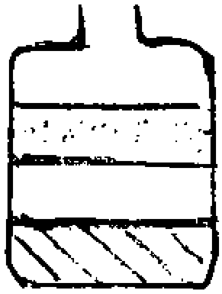

Choose the correct statement below

A. Liquid Z was found in the middle
B. Liquid X was found at the top
C. Liquid Y was found at the bottom
D Liquid X was found at the bottom

28. With the help of a screw driver you are required to drive four wood screws given below into a piece of wood. Indicate below which screw would require least effort to go into the wood.

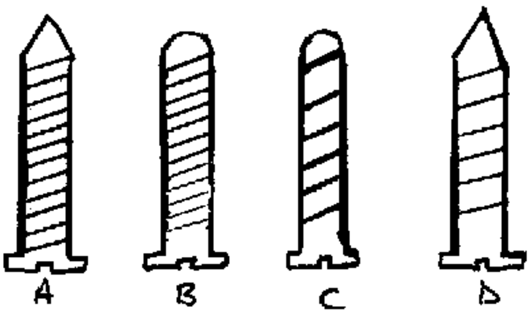

A.
B.
C.
D.

29. Observe the animals represented by the diagrams below and choose the statement that applies to all of them.

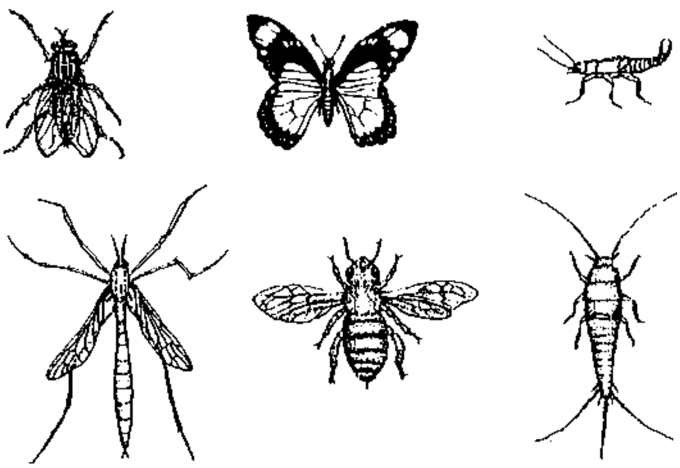

A. The wings can be easily seen.
B. The legs are longer than the body.
C. There is a pair of antennae on the head.
D. The abdomen has hair-like structures at the end.

30. Pupils from Bemba Primary School heated three liquids separately and took the temperature of each every two minutes. After boiling they continue to take the temperature for about 10 minutes. The first liquid boiled at 78°C, the second at 100°C, and the third at 60°C

Which of the following graphs best show how the temperature of the liquids changed.

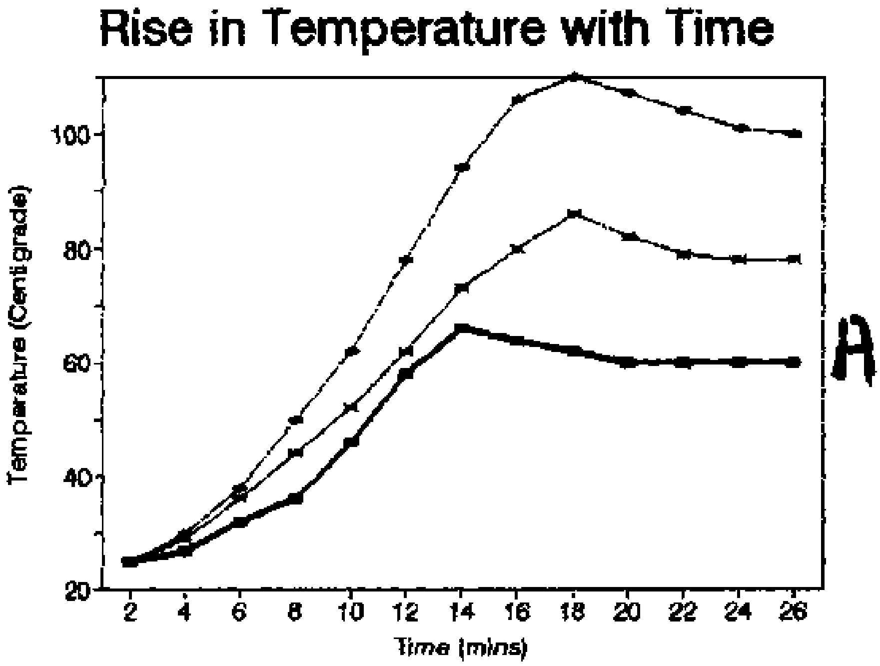

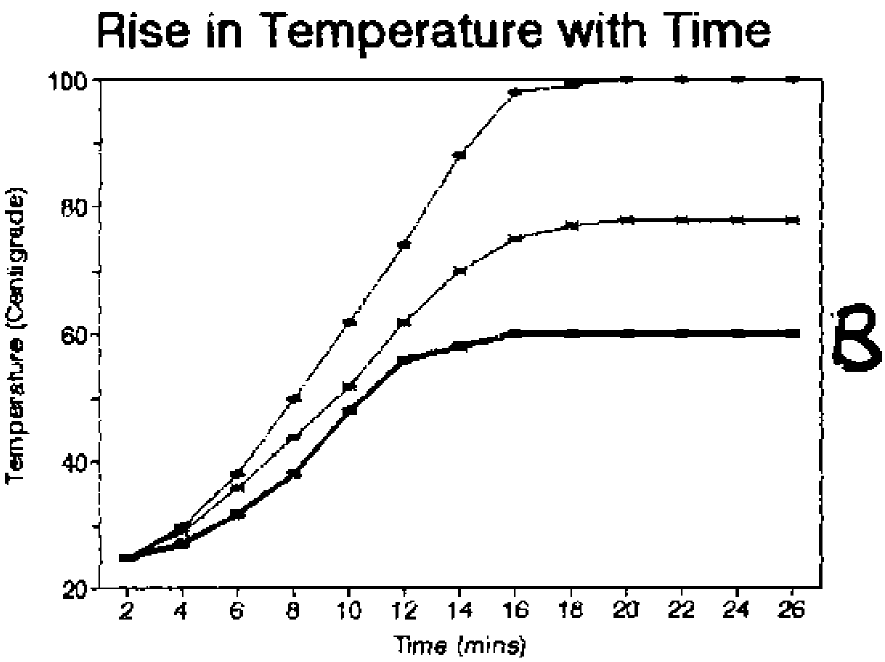

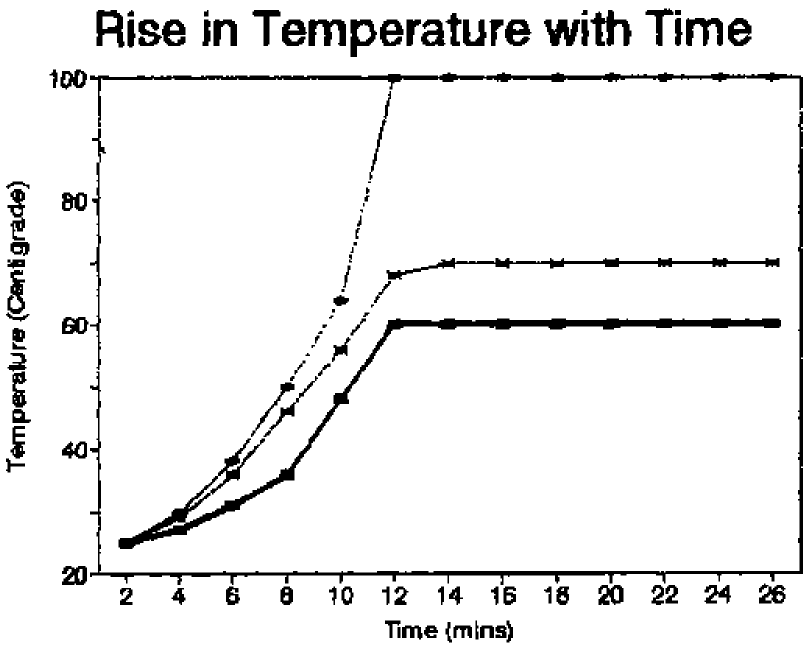

C

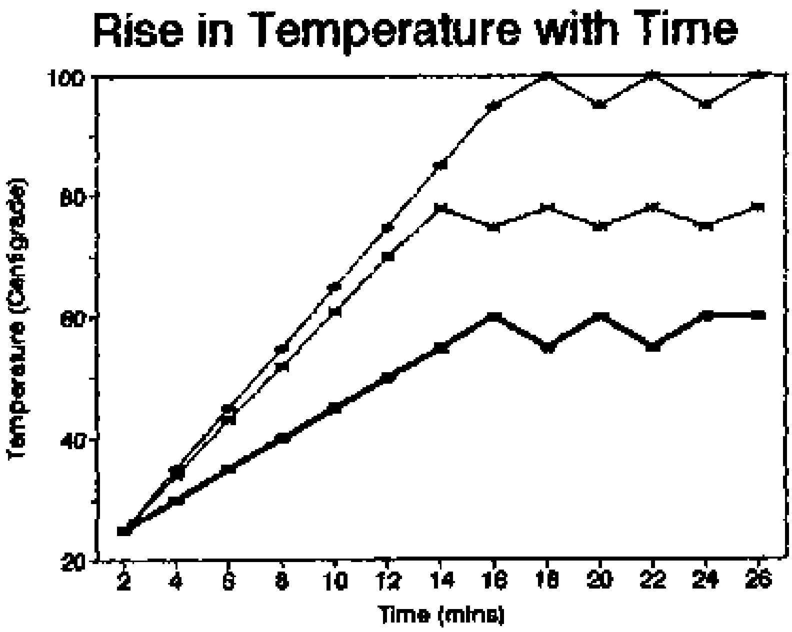

D

A.
B.
C.
D.

MARKING SCHEME FOR TRIAL TEST PAPER»SCIENCE & AGRICULTURE«

(1)	C	(16)	C
(2)	C	(17)	A
(3)	c	(18)	A
(4)	B	(19)	D
(5)	D	(20)	C
(6)	C	(21)	A
(7)	B	(22)	D
(8)	B	(23)	D
(9)	B	(24)	B

(10)	B	(25)	D
(11)	C	(26)	D
(12)	C	(27)	D
(13)	D	(28)	A
(14)	C	(29)	C
(15)	A	(30)	B

SUMMARY	
Key	Frequency of Items
A	5
B	7
C	10
D	8
Total	**30**

Assignment 5: Item Prediction

Look at the reviewed and edited 30 items of the final test paper. Before you start the trials in school try to assess the items in advance, and compare your predictions later on with the test results after the analysis of the data.

- Which items do you expect to be easy for the pupils?
- Which items do you expect to be difficult for the pupils?
- Which items would favour girls?
- Which items would favour boys?

- List those items which would discriminate well.
- List those items with the strongest distractors.

Assignment 6: Administration of Test

- Groups 1, 2, 3 split into two sub-groups.

- Each sub-group nominates test administrator.

- Test administrators meet to develop **brief note:**

  → How should the test be introduced?
  → What instructions should be given?
  → Time limit?
  → Queries?
  → Collection of papers.

- Other group members meet in group 1, 2 or 3. Design **interview agenda** for school visit.

  → Interview questions for Science teachers based on last year's examination paper, school based testing practices and assessment. Include some discussion of performance differences and difficult types of item.

  → Notes to review students' books.

  → Notes to observe facilities, especially textbooks, and school based tests.

  → Assume you have about 45 minutes to interview and 45 minutes to observe.

Info 6: Summary of Item Analysis Procedures

1. The analysis of multiple-choice items is usually undertaken for one of several reasons:

- A pre-test analysis is undertaken on a representative sample of candidates to determine which items have appropriate difficulty and discrimination.

- A post-test analysis is used to establish whether items have performed acceptably in terms of difficulty and discrimination.

- Analyses are needed of particular groups of candidates (e.g. girls, rural and urban) to decide what differences there are in performance and which kind of items produce most of the variation in performance.

2. Item difficulty (D) is established by calculating the proportion of candidates obtaining a correct response to each item or to the test as a whole. The simplest formula for this is

$$\mathbf{D = N_c / N_t}$$

where N_c = Number getting the correct response, and
N_t = Number of candidates responding to the item.

3. For norm-referenced tests, where the performance of each candidate is compared to that of others (and the expected distribution usually approximates a normal curve), it is desirable that average difficulty is about 0.5. This allows the maximum variation between candidates to occur. If most items are very easy D>0.70 or very difficult D<0.30 it will be difficult to separate out the performance of candidates and the level of discrimination will be low.

4. It may be desirable to include more items with D>0.50 than with less so that even poor candidates have the satisfaction of a numerical score that appears to approach 40 to 50%. The decision on the average D for a test is ultimately arbitrary, but it should not be so high that it seriously reduces discrimination levels in a norm-referenced test.

5. Items should be selected for their content validity. The value of D should be a secondary consideration. The value of D is not directly related to the cognitive level of items - e.g. recall items can have high or low D as can application items.

6. Criterion-referenced tests (where performance is compared to a criterion performance represented by the test item) are not concerned with discrimination across the range of scores. It is therefore inappropriate to select items for these tests on the basis of the “D”-value. The logic is that it is the criterion that is defined first and candidates are invited to achieve successful performance. If most do not, the criterion may be revised and vice versa. Mastery learning criterion-referenced tests assume that most will be able to master the performance and the value of D will be high.

7. Discriminating power refers to the ability of an item to separate candidates in a distribution that correlates well with performance on a complete test (or sub-test). High scoring candidates overall should score well on each individual item. If they do not, good candidates are performing poorly on an item and the reasons need investigation (e.g. they may be confused by ambiguous wording that less able candidates fail to perceive; the item may measure a different trait than the overall test).

8. The discrimination power (DI) of an item can be calculated simply by dividing candidates into quartiles (top 25%, upper middle 25%, lower middle 25%, lowest 25%) and applying the formula below:

$$\mathbf{DI = (N_u - N_l)/N_t}$$

where N_u = Number getting the correct response in the top 25%,
N_l = Number getting the correct response in the lower 25%,
N_t = Total number of correct responses in upper and lower groups.

Alternative methods divide candidates into two or three groups rather than four.

9. When DI is positive and > 0 the item is discriminating in the same way the test does. When it is negative and D< 0 the item is penalising those who score highly overall. When D is close to zero no useful discrimination is occurring.

10. A DI >0.3 is usually considered acceptable for a well behaved item. If DI is lower the item should probably be revised. Where DI is negative it may be measuring a skill or cognitive process unrelated to other items within the test.

11. Items can have an acceptable DI but have little or no content validity. The latter has to be assured.

12. Criterion-referenced tests need to discriminate in a different way to norm-referenced tests. With norm-referencing good discrimination is desirable across the whole range of marks. With criterion-referencing it is only significant at the level of the criterion performance - much better or much worse performance is not of concern for grading.

13. Distractors are those alternatives which are incorrect for each item. Analysis of the D and DI values of distractors can indicate whether

- many candidates chose one distractor (in which case it may be misleadingly worded);

- particular types of candidate are attracted to a distractor (in which case one group of candidates may be disadvantaged);

- no candidates chose a distractor (in which case it should be discarded);

14. Good distractors attract comparable numbers of lower scoring candidates for each alternative. Higher scoring candidates should be the minority of those who chose distractors.

15. A simple measure of the internal consistency of a test is to calculate performance on different groups of items (split halves) and compare these. The most convenient approximation of this is to use the Kuder-Richardson formula known as KR21.

$$\text{Reliability (KR21)} = \frac{k\,(1-(m\,(k-m)/ks^2))}{k-1}$$

k = number of test items
m = mean score (arithmetic mean)
s = standard deviation of test scores

16. KR 21 tests if all items measure the same thing (homogeneity). It is roughly equivalent to split-half tests of reliability where performance on half the items is compared to performance in the other half. It is not appropriate for tests where not all candidates complete all items (speed tests). The higher KR21 is the more consistent the test items.

17. Item analysis has to be undertaken for a purpose (item selection, post-test assessment, performance analysis). This should be decided at the outset.

18. The content validity of items is critical and consideration of this should precede consideration of D and DI.

19. Item analysis should be approached systematically and records kept of the results of each analysis so that it may be referred to subsequently. Item content should be recorded with item statistics.

Assignment 7: Preliminary Analysis of Data

• Give each candidate a number (e.g. School 1/1-50, School 2/1-63, School 3/1-48 etc.).

• For each school split papers into boys and girls.

• Mark whole set recording total score for each candidate.

• Note average score of boys and girls.

• Arrange papers in order of total score and separate into two halves (to get high and low scoring groups).

• Mark each item by counting number of A/B/C/D-responses in each group.

• Work out overall facility value

$$\mathbf{F} = \frac{\mathbf{N}\,\text{Correct} \;\text{x}\; 100}{\mathbf{N}}$$

• Work out discrimination index for key and for distractors

$$\mathbf{D} = \frac{\mathbf{N}_u - \mathbf{N}_l}{\mathbf{N}/2}$$

(number of correct answers of top candidates (N_U) minus number of correct answers of bottom candidates divided by half of the total number of candidates (N/2))

• Work out **F** and **D** for boys and girls separately.

SCHOOL NAME

Item		Options				Facility Value	Discrimination Index	Facility Value (Female)	Facility Value (Male)
		A	B	C	D	F	D	FF	MF
01	N_U								
	N_l								
02	N_U								
	N_l								
03	N_U								
	N_l								
04	N_U								
	N_l								
05	N_U								
	N_l								
06	N_U								
	N_l								
07	N_U								
	N_l								
08	N_U								
	N_l								
09	N_U								
	N_l								
10	N_U								
	N_l								
11	N_U								
	N_l								
12	N_U								
	N_l								
etc.									

N_u = number of upper group achievers
N_l = number of lower group achievers

Info 7: A Simple Measure of Reliability

$$\text{Reability (KR21)} = \frac{K\,(1 - (M\,(K - M)/KS^2))}{K - 1}$$

K = number of test items (30)
M = mean score (arithmetic mean)
S = standard deviation of test scores

• KR 21 tests if all items measure the same thing (homogeneity).

• Roughly equivalent to split-half tests of reliability.

• Not appropriate for speeded tests (if a larger number of students do not complete the test).

• Not an indication of constancy of score over time.

Note: See also Info 6, Nos. 15 & 16.

WORKING GROUP RESULTS

Outline for Interview with Science/Agriculture Teachers

WORKSHOP on»WRITING OF TEST ITEMS FOR PRIMARY SCHOOL LEAVING EXAMINATIONS«- Nyeri/Kenya, 1994

GROUP II

Name of School:

1. General Feelings about the 1993 Examination Paper

1. Level of difficulty
2. Language used
3. Accuracy of diagrams
4. Syllabus coverage
5. Time allocated to exams
6. Clarity of instructions
7. Gender or area bias
8. Chances of questions used in teaching being used in the National Examination
9. Who sets this exam, do you get a chance to be involved?

2. School-Based Assessment

1. How often do you test?

2. Who sets these tests?

3. Are there any exchanges between teachers and schools?

4. Are you given any training?

5. At what level of difficulty and on what sections do you test?

6. Do you evaluate your tests?

7. Do you have resources to help you set tests?

8. What is the purpose of this testing?

9. Do you keep records?

10. Are the results fed back to the pupils or parents (do you have prize givings)?

11. Do you institute remedial work to help those who are not passing?

12. What types of questions do you set, i.e. multiple-choice or longer answers (try to get a sample)?

13. What problems do you encounter with different methods?

3. Books

Ask these questions first about text books and then about the pupils' exercise books.

1. What type of books are used?
2. How many books?
3. Do you have a resource centre?
4. Do the pupils own their books or do they belong to the school?
5. Do the pupils value their books?

Now with regard to pupils' exercise books

1. How are the notes laid out?
2. How do you control the quality of the diagrams?
3. How frequently do you inspect the books?
4. How frequently are you inspected?
5. What problems do you encounter e.g. pupils losing books, copying?
6. Any other comments?

7. **Select pupils' exercise books at random and study them carefully,**

paying special attention to the following:

→ Are the exercise books kept regularly?
→ Do pupils describe things in their own words?
→ Are informations kept uniformly in all books?
→ Do the books mainly contain copy work from chalkboard?
→ Check topics covered with syllabus for Std. 7.

WORKSHOP on»WRITING OF TEST ITEMS FOR PRIMARY SCHOOL LEAVING EXAMINATIONS«- Nyeri/Kenya, 1994

GROUP III

Outline for Interview with Science/Agriculture Teachers

Name of School:

Sex of interviewee:
Teaching experience:
Grade taught:
Teacher's qualification:

Number of Science & Agriculture teachers:
Number of Science & Agriculture periods per week:

• INTERVIEW QUESTIONS BASED ON THE 1993 KCP SCIENCE AND AGRICULTURE EXAMINATION

1. Was the syllabus adequately covered by the examination?

Yes ❑ No ❑

2. Did the examination meet the curriculum objectives?

Yes ❑ No ❑

3. To what extent was the Science syllabus covered?
(Last year before they sat for the final exam?)

Less than half ❑ Three quarters ❑
Half ❑ More than three quarters ❑

4. Would you say last year's paper was easy or difficult?
Give reasons.

5. Which questions do you think were difficult?
Give reasons.

6. Which questions do you think were easy? Give reasons.

7. Are you happy with the multiple-choice type of questions in the exam?

Yes ❑ No ❑

Give reasons.

• QUESTIONS ON SCHOOL-BASED TESTING PRACTICES

1. How often do you test your pupils?

2. How do you generate your test items?

KCPE past papers ❑ Set own questions ❑
Other methods (specify) ❑

3. Do you meet any problems when administering school-based tests?

Yes ❑ No ❑

4. What do you think is the root cause of these problems?

5. How have you tackled these problems?

6. To what use do you put the results of the tests?

• QUESTIONS RELATED TO PERFORMANCE DIFFERENCES

1. How was the performance of your pupils in the 1993 KCPE Science paper?

Overall ❑ Good ❑ Average ❑ Bad ❑

2. How do you compare the performance of

- boys and girls?
- rural and urban pupils?

3. What suggestion would you make so as to attain better performance of your pupils in the KCPE Science and Agriculture papers?

• BOOKS AND EQUIPMENT

1. Does the school provide textbooks to pupils?

Yes ❑ No ❑

If yes, are they adequate?

2. Are the books suitable to the syllabus?

Yes ❑ No ❑

3. What equipment does the school have for Science and Agriculture teaching?

• NOTES TO REVIEW PUPILS' NOTE BOOKS

The team should review 5 pupils' Note Books selected randomly from Std. 8 and note

1. Topics covered
2. Adequacy of notes
3. Relevance
4. Accuracy of notes, diagrams etc.
5. Evidence of teacher review of notes

Reports on Interviews in Primary School

WORKSHOP on»WRITING OF TEST ITEMS FOR PRIMARY SCHOOL LEAVING EXAMINATIONS«- Nyeri/Kenya, 1994

GROUP IA

1. Introduction

This is a report of an interview held at **Kangocho Primary School** on 22nd March, 1994. The Science/Agriculture teacher was not available since he had gone to hospital. Some teachers, a Std. 6 Science teacher and the headmaster of the school were interviewed instead. The school has six subject panels for Languages, Mathematics, Geography/History/Civics/Religion, Home Economics/Business Education, Art & Craft, Science/Agriculture, each comprising six teachers on average.

2. KCPE 1993 Science/Agriculture

The paper was considered to have fair and adequately covered the syllabus. Boys performed better than girls. Teachers are fairly happy with the KCPE format but some feel that multiple-choice items deny pupils chances to reason and express themselves. KCPE results of a given year are analysed to ensure that weak areas are given adequate attention in the teaching of candidates for the following year.

With regard to pupils' preparation for the exam, the pupils are adequately prepared through zonal, divisional and district level examinations. In Standards 4 to 8 pupils are given nine examinations per year and during the final year (Std. 8) the third term is devoted to KCPE past papers. Pupils write the exams and difficult topic areas are identified and discussed by the teacher(s) and pupils.

3. Teaching/Learning of Science/Agriculture

Teaching is rather theoretical due to lack of equipment. The school does not have a shamba for practical agriculture and there is no science room. The science equipment is borrowed from the nearby secondary school, but the school has spring balances, thermometers, torch cells and circuit wires (leads).

The set books are those recommended by the Kenya Institute of Education. Two pupils share a book. Textbooks are given to the pupils in January and collected in December of each year. Some parents buy textbooks for their children as encouraged by the school management. Textbook needs are discussed during staff meetings and the money available, raised through Harambee meetings and donations, is used according to decisions of the staff. Examination of note books showed that pupils are given some notes and a few exercises to do.

4. Test Construction/Generation

Teachers have an idea of test construction as taught during methodology courses at Teachers' Training Colleges; but there is no course in Measurement and Evaluation per se at Teachers' Training Colleges.

The setting of zonal, divisional and district level examinations is done by subject panels which use the KCPE format but panelists are not experts in setting questions.

5. General Comments

The education system in Kenya seems to be exam driven since it is highly competitive. Besides grading and ranking pupils' performance, schools and districts are ranked. This in effect forces teachers to teach to the exam. Syllabuses are rushed through to ensure coverage so that pupils are prepared for the exam. One would only feel sympathy for the pupils as regards the number of examination papers they have to go through. Somehow the pupils tend to cope with the situation.

WORKSHOP on»WRITING OF TEST ITEMS FOR PRIMARY SCHOOL LEAVING EXAMINATIONS«- Nyeri/Kenya, 1994

GROUP III B

1. Introduction

Three members of the group interviewed the headteacher and three Science and Agriculture teachers of **Nyamachaki Primary School** on 22nd March, 1994 between 11.30 a.m. and 12.45 p.m. The interview was carried out by following guiding questions which had been prepared the previous day.

The purpose of the interview was to collect information about the school concerning its background history, current number of Science and Agriculture teachers, time allocation and the teaching of Science and Agriculture subjects, availability of facilities and teaching/learning materials, 1993 Kenya Certificate of Primary Education (KCPE) Science and Agriculture examination and school-based testing procedures practised.

2. Findings of the Interview

2.1. Background History

Nyamachaki Primary School is located a few kilometres from Nyeri town in Central Province. The school was established in 1933. It started with 560 pupils, but the number has risen up to 1,169 pupils currently. Most of the pupils in the school are residents of Nyeri town and from surrounding areas. However, there are some pupils who come as far as 10 km from the school. These pupils travel by bus to and from the school every day.

2.2. Current Number of Teachers

The school has a total number of 33 teachers out of whom six are men and the rest are women.

Out of the 33 teachers, eight teach Science and Agriculture subjects in Std. 3-8. Three of them teach in Std. 7 and 8. They are trained grade Pl teachers with a teaching experience of more than four years.

Of the three Science teachers teaching in Std. 7 and 8, two are females, one is male.

2.3. Time Allocation and the Teaching of Science and Agriculture

The Science and Agriculture subjects are each allocated three periods per week. Interviewed teachers remarked that time allocated for Science was not enough, but the time for Agriculture was sufficient. They said they used some of the Agriculture periods for teaching Science.

Pupils of Std. 4-8 are allocated 2.15 hours per week in the school timetable for remedial instruction and preparatory work. If this time is well utilized by pupils and teachers it is likely to improve pupils' progress and performance. Teachers mostly use the lecture method of teaching. Very few practicals and demonstrations are done during teaching.

2.4. Availability of Facilities and Teaching/Learning Materials It was learnt from teachers during the interview that:

- the school has a workshop room for Art and Craft and Home Science practical instruction;

- the school has buildings that are enough for 24 streams/classes;

- out of the 24 classes, 9 of them are semi-permanent structures. The walls and roofs of these structures were constructed with corrugated iron sheets;

- pupils' textbooks for Science and Agriculture subjects are not enough. The ratio is about one book for ten pupils;

- the books are suitable for the syllabuses of Science and Agriculture subjects;

- there are insufficient numbers of teachers' guides and syllabuses. There are only three syllabuses for Science and Agriculture for the whole school;

- there are no Science kits for practical instruction;

- the school has a demonstration plot but currently it is not used for offering practical instruction for Agriculture lessons.

2.5. 1993 KCPE Science and Agriculture Examination

The following were findings from the interview with regard to last year's KCPE Science and Agriculture examination:

- The syllabus was adequately covered by the examination.

- The examination adequately met the curriculum objectives of the subjects.

- Before Std. 8 sat for the examination, more than 3/4 of the syllabuses for the subjects had already been covered.

• Interviewed teachers indicated that the following items[1] were:

- very difficult: Items No. 22 and 42;

- difficult: Items No. 3, 4, 10, 16, 18, 21, 29, 30, 32, 35, 37, 48, 57, and 60;

- moderately difficult: Items No. 2, 5, 11, 13, 17, 19, 25, 28, 31, 33, 47, 49, 52, 53, 55, and 56;

- easy: Items No. 1, 6, 7, 8, 9, 12,14,15, 20, 23, 24, 26, 27, 34, 36, 38, 39, 40, 41, 43, 44, 45, 46, 50, 51, 54, 58, and 59.

[1] See: Vol. 2 - Assessment of Science Mid Agriculture in Primary Schools in Africa; 12 Country Cases Reviewed

• Last year's exam was generally of the right standard.

• Interviewed teachers explained that some of the items were:

- difficult because they required memorizing complex subject matter; interpretation of complex material asked in the items and involved calculations; also pupils had not performed many experiments; some of the examined material on diseases had not been taught because the syllabus does not specify which diseases have to be taught;

- easy because they were short and of recall type; were more or less related to pupils' environment and experiences or had diagrams which were easy to analyse.

• Boys performed better than girls and most of those who performed poor were girls.

• Urban pupils performed better than pupils who came from rural areas.

• The following suggestions were put forward so as to attain better performance of pupils in the KCPE Science and Agriculture exams:

- provision of adequate and accurate materials for undertaking practical activities (they are not provided so far);

- provision of enough teaching/learning materials;

- to have 5 periods per week for Science teaching;

- teachers to be given seminars on topics in which they have low competence in teaching them effectively.

• The average score of the school last year was 431.67 out of a total score of 700. Hence the school was among the best schools in the District. The average score for the school has never gone below 404 for the past three years.

2.6. School-Based Testing Practices Undertaken

It was found out from the interview that:

• the teachers give quizzes after covering every topic. The quizzes are prepared by the teachers themselves using the syllabus and other course materials;

• pupils of Std. 6-8 are given 3 external exams per term;

• results of test/exam scores are recorded and used for guiding the teacher in undertaking remedial teaching;

- no problems are encountered in administering school-based tests apart from inadequate availability of stationery;

- pupils are prepared for exams by being drilled in answering past KCPE papers and other examination papers.

Reports on Test Administration

WORKSHOP on»WRITING OF TEST ITEMS FOR PRIMARY SCHOOL LEAVING EXAMINATIONS«- Nyeri/Kenya, 1994

GROUP IA

School: **Kangocho Primary School**

Class Tested: Std. 8 (14 year olds)

No. of Pupils: 64 (32 boys + 32 girls)

Progress of test:

(1) After 15 minutes, most candidates on No. 11.
After 30 minutes, most candidates on No. 20.
After 55 minutes, most candidates finished.

Candidates checked their answers once they had completed all items.

(2) All candidates brought pencils and erasers; they appeared to have been briefed beforehand and were co-operative and well disciplined.

(3) One should bear in mind we are testing long-term memory - the children were not asked to revise their Std. 7 Science and Agriculture knowledge; certain factual recall (diseases, symptoms, etc.) may be poor as a result.

(4) All of the Std. 8 pupils in Kangocho Primary School wrote the test.

(5) All candidates completed the test in the time allocated (1 hour).

WORKSHOP on»WRITING OF TEST ITEMS FOR PRIMARY SCHOOL LEAVING EXAMINATIONS«- Nyeri/Kenya, 1994

GROUP III A

School: **Mathaithi Primary School**

Introduction

The test was administered on the 22nd March, 1994. The pupils had just finished writing a KCPE Mock Examination Paper. They were 78 candidates and could not be fitted in one room.

General Instruction

The test administrator explicitly explained why the test was administered. It was administered to find out how good or bad the test was. It was not part of the mock exam they were going through. It was most unfortunate that the whole exercise coincided with the time when they were writing their mock. The test administrator went over the general instructions. They were told they would not be given separate answer sheets. They would circle the letter that corresponded with the correct response. An example was demonstrated on the chalkboard. Rubbers were put on each desk just in case the candidates wanted to make a correction in their responses. Caution was made on number 25. They were asked to alter the distractors on that item and write those written on the chalkboard. Half the pupils were asked to go to another room. Mostly those who remained were boys. The starting time of the test was 10.10 a.m. and the finishing time was 11.10 a.m. The information was displayed on the chalkboard.

General Observations

Some candidates, mostly boys, took a shorter time. Others even went over the paper trying to make readjustments to those items they did not get the answers straight away. No candidate needed any help and explanation of any item. Pupils' discipline was fantastic.

Physical Condition of the Classroom

The classroom set up was conducive to class activities. It was very spacious. Most space was taken by the big tables the children were writing on.

Reports on Test Results in Schools

WORKSHOP on»WRITING OF TEST ITEMS FOR PRIMARY SCHOOL LEAVING EXAMINATIONS«- Nyeri/Kenya, 1994

<u>GROUP IA</u>

School: **Kangocho Primary School**

Number of candidates:	64 (32 male & 32 female)	
Number of test items:	30, each scoring one point	
Performance Statistics:	• Overall average:	16.56
	• Average for males:	17.03
	• Average for females:	16.09
	• Range of scores:	11 to 26
	• Standard deviation:	3.07 (corrected)
	• Test reliability:	0.22 (KR21)

Item Analysis

1. Facility

(1) Items within acceptable range of difficulty of 30-70%: 4-6, 12, 13, 17, 20, 22, 24, and 27 (10 items)
(2) Items above acceptable range of difficulty: 1-3, 8, 11, 14, 15, 18, 19, 26, and 29 (11 items)
(3) Items below acceptable range of difficulty: 7, 9, 10, 16, 21, 23, 25, 28, and 30 (9 items)

Note: See items in the TRIAL TEST PAPER, pp. 82-98.

Possible explanations of items above acceptable range of difficulty:

Item 1: The candidates appeared to be well prepared for reading a graph.
Item 2: This was a simple knowledge (recall) question.
Item 3: This was within the candidate's daily experiences in agriculture.
Item 8: No comment as F = 100 (and D = 0).
Item 11: Same as for Item 1 above.
Item 14: F = 70.31 ≈ 70, acceptable.
Item 15: Simple observation in everyday situations.
Item 18: »Sales«and»Expenses«were clues.

Item 19: Very simple classification.
Item 26: Same as for Item 3 above.
Item 29: Simple observation.

Possible explanations of items below acceptable range of difficulty:

Item 7: Candidates may not know the meaning of»gentle«and»steep«slopes.
Item 9: Candidates may not be familiar with this type of deficiency disease in tea; inadequate coverage in textbooks.
Item 10: Advanced classification required.
Item 16: Not within the pupils' everyday experience.
Item 21: The term»interdependent«misunderstood. (As predicted!)
Item 23: Poor concept of volume and, possibly lack of equipment.
Item 25: Information lacking in stem and of comprehension level calling for prediction.
Item 28: The pointedness of the screws became the criterion rather than the threads.
Item 30: Lack of equipment and possibly not knowing that boiling takes place at constant temperature.

2. Discrimination

Items displaying poor discrimination are:

Item 1: Very easy for both upper and lower groups, therefore, no discrimination.
Item 6: The majority of the upper group opted for the distractor. The diagram emphasized use of CO_2. The word»recycle«was unfamiliar.
Item 8: Familiar to both groups.
Item 11: As in Item 1 above.
Item 13: Both groups found the calculation simple.
Item 14: Option A because of its closeness to the key C attracted the upper candidates.
Item 16: Both upper and lower groups were unfamiliar with the disease, hence choice of B which is familiar to them.
Item 19: Borderline.
Item 22: The topic was moderately understood by both groups.

3. Distractors

Item 1: Distractors did not work - the question should have been pitched at a higher level.
Item 2: Distractors for A and B are negative; possibly»incorrectly«was misunderstood. Option D did not work.
Item 3: Distractors for B and D are negative; possibly lower candidates are not familiar with»shading«.
Item 4: Item had too many variables for the lower group to establish the overall relationship.
Item 5: Distractors B and C hardly worked; the instruments were obviously different in function. The key D and option A worked equally.
Item 6: Distractor B with highest D (0.22) strongly attracted candidates in both groups not identifying the key.
Item 7: The option for»constructing gabions«only appears once and in distractor C; this might have been an attraction for the lower group. The meaning of»gentle«was misunderstood hence D = 0 for distractor D.
Item 8: Distractors did not work.
Item 9: Distractor A attracted the majority of the candidates as they are familiar with the element Nitrogen. The negative Ds for options A and C are insignificant (difference of 1).
Item 10: The variations are mainly due to guess-work.
Item 11: Distractors A and B hardly worked. Distractor D functioned despite negative D.
Item 12: The distractors worked for both groups more to the disadvantage of the lower group.
Item 13: Distractors B and C hardly worked.
Item 14: Distractors B and D hardly worked.

Item 15: The lower group was attracted by option C, possibly thought movement involved the whole arm.
Item 16: Both groups were attracted by distractors A and B possibly because they are familiar.
Item 17: Distractor B did not work because it was obviously correct. Diagram misleading.
Item 18: Distractor C did not work; distractors B and C attracted more of the lower group because of poor addition skills.
Item 19: Distractors A and B did not work effectively.
Item 20: Distractors A and D did not work. Distractor B was the most effective.
Item 21: Distractor D was the strongest because of the misunderstanding of»interdependent«.
Item 22: Distractors A and B worked well; C was weak (only attracted lower group).
Item 23: Distractor A hardly worked. Weaker candidates opted for B (poor volume concept).
Item 24: Distractor A hardly worked; C and D attracted the lower group.
Item 25: Distractor A hardly worked; distractor C attracted most candidates.

WORKSHOP on»WRITING OF TEST ITEMS FOR PRIMARY SCHOOL LEAVING EXAMINATIONS«- Nyeri/Kenya, 1994

GROUP II B

School: **Kwanderi Primary School**

X_{all} = 15.073

X_B = 15.833

X_G = 14.0

Standard Deviation = 3.054 Reliability = 0.777

Facility index	30 - 70%	=	4, 5, 13, 14, 15, 17, 20, 22, 24, 26, 27, 28
	> 70	=	1, 2, 3, 8, 10, 18, 19, 29
	<30	=	6,7,9,10,12,16,21,23,25,30

Boys scored well on 15 items.
Girls scored well on 13 items.
Boys = Girls 2 items.

Item Analysis

• Questions 1, 2 and 3 were very easy with facility indices above 80%. Maybe this was due to the fact that the purpose was to ease the candidates into the examination.

• Question 3
Distractor A did not work well because the discrimination index was 0.

• Question 4
Discriminated very well. All the distractors were quite reasonable.

• Question 5
Most candidates chose A; maybe diagram R did not appear familiar to them. The key has a negative discrimination index which means that $N_l > N_u$; the»wrong«students, those that performed badly on the whole test, got the item correct.

• Question 6
Distractor D did not discriminate at all. Most candidates chose option B. Maybe the word»recycle«was not familiar to the candidates.

• Question 7

To a majority of candidates D was the most popular, because they did not seem to know the difference between a gentle slope and just a slope. The word»gentle«did not guide them in any way.

• Question 8
Distractors A and B did not discriminate at all. This might have been due to the inability to classify the parasites into internal and external parasites and then to decide on the method used to control the parasite. It might be that the pupils did not thoroughly analyse the diagram. Discrimination index for B was negative, so the distractor did not work well.

• Question 9
The most popular distractor was D; the key was negative which means that it did not work well $N_l > N_u$.

• Question 10
There was clear evidence of guessing since all distractors were chosen. This could be due to the inability to classify diseases according to the causative agent. This was a very difficult question with facility index of 0.293, which is low.

• Questions 11, 18, 19, and 29 were quite easy with a facility index above 0.8.

• Question 12
C and D have positive discrimination indices. So they were behaving the same way as the total test. C was the key but D appeared correct to the candidates. This clearly shows that there are hardly any practical experiments carried out in the classroom.

• Question 13
Some candidates chose A. This could be due to the fact that they concentrated on the number of eggs produced, but did not take into account the number of broken eggs.

• Question 14
Most candidates either chose option B or D because the idea of conservation of soil fertility did not click, all they considered was crop type and season. However, the facility index was 0.61 showing that the question was not very difficult. In fact it proved to be difficult for candidates to evaluate each distractor and decide the main reason.

• Question 15
The question was not accurately read so that for distractors B and C the discrimination index was 0.

• Question 16
The discrimination index for B was positive, so $N_l > N_u$. Therefore, the distractor did not work.

• Question 17
Maybe the»antenna«was not clearly labelled, so candidates may have been affected in a way. All the distractors worked, in fact it was a relatively easy question.

• Question 20
Distractors C and D have discrimination indices which are positive meaning that $N_l > N_u$; therefore, the distractors did not work.

• Question 21
The key A has a negative discrimination index, so the distractor was poor. To the candidates D appeared to be the correct answer. It seems that the stem needed to be improved, because it was not quite clear what type of interdependence was required.

• Question 22
It was not a very easy question. The discrimination index for B was 0, so it did not discriminate at all.

• Question 23
Distractors A and D have positive discrimination indices; $N_l > N_u$.

• Question 24
It was clearly evident that the candidates had problems with reading the scale such that options A, B and D did not discriminate well. A and B both had positive discrimination indices and D did not discriminate at all.

• Question 25
Absence of practicals actually being conducted in class hampered the students' ability to score. Most candidates chose C; $N_l > N_u$. So the distractor did not work well.

• Question 26
This was a very difficult question for the candidates and there was a lot of guessing. For all the distractors Dl was positive.

• Question 27
The graph proved difficult to the candidates such that discrimination index for C was 0.

Question 28
Most candidates chose option D because they concentrated on the tips of the screws not the number of threads. In fact the only variable should have been the number of threads and the tips should have been the same.

• Question 30
It was the most difficult question. Candidates failed to interpret the graphs.

2.3.2. Reviewing the Item Writing and Testing Process

The objective of the exercise on item writing, testing and analysis was to train participants in the construction and analysis of test items for Primary Science and Agriculture. This was approached through a practical task which entailed writing assessment items, constructing a trial examination paper, applying it to groups of pupils and analysing the results. This involved several steps which included:

Deciding a Specification for the Range of Items to be Constructed

Multiple-choice items are widely used in assessment at the end of primary school in many African countries. The Certificate of Primary Education (CPE) in Kenya consists entirely of multiple-choice items and pupils are used to the format. Many of the underlying principles of item construction and analysis can be demonstrated through the development of multiple-choice questions. For these reasons, and the limitations of time it was decided to focus on the construction of an instrument with about 30 multiple-choice items. This was a sufficient number for all participants to contribute to the process.

Since the instrument had to be piloted on Kenyan pupils the content for items had to be drawn from the Kenyan Science and Agriculture curricula. It was decided to try out the instrument with pupils entering Grade 8 and thus material from Grade 7 was identified as that which was most appropriate to use.

To focus the exercise specific areas of the curriculum were identified and several items were written relating to each. As the intention was to concentrate on developing items above the level of recall five skill areas were identified in which items could be produced. The areas and the content topics chosen are indicated in **Assignment 1,** Table of Specification - Topics by Skills.

The skills identified were some of those judged most important to develop at primary level.

They were chosen after discussion of the meaning of each which can be summarised briefly as:

Observation	=	skills of looking and seeing
Classification	=	skills of categorising cases according to rules
Measurement	=	skills of deciding how or what to measure
Recording Data	=	skills of deciding how to record data
Interpreting Data	=	skills of interpreting data e.g. graphically

Development of Test Items

Test items were developed by participants working individually after discussion of the approaches that could be used and the pitfalls to avoid. Kenyan curriculum materials in Science and Agriculture were made available. Each individual produced at least two items for comment and improvement by other participants.

The development process alternated between writing periods and collaborative discussion of items produced in small groups. This was the first level peer auditing process. Participants were then grouped into three working groups and each was asked to produce between 10 to 15 items after internal review. This resulted in the production of more than 40 items which were then produced in the form of a trial test paper. This paper was then reviewed and edited to select the 30 items required for the final version.

As an additional exercise participants were asked to predict which items would be easy or difficult, which would discriminate well, which would be the strongest distractor, and which would favour boys or girls.

Trial of Test Items in Schools

Six local schools were identified where the test could be applied. These included some schools ranked very highly in national lists and other schools that were typical of the Nyeri District. Six teams of participants were organized, one for each school. In each team one member took responsibility for administering the test and the others arranged to interview school staff about assessment issues. Test administration was standardised as much as possible. The test was administered to a whole class group in all the schools except for one where the whole year group was tested. The test was timed for one hour.

Test administrators and the participants who interviewed teachers were asked to write up their observations briefly to feed into the discussion of how the test performed.

Marking of Responses

Altogether 338 papers were analysed from the six school samples. Marking was organized in school groups and participants developed an agreed procedure. First scripts were sorted in to boys and girls and then marked. This enabled overall averages to be calculated and differences in average score between girls and boys to be noted. Facility indices for items could also be calculated. The papers were then ordered from the best to the worst and performance of the top and bottom halves was calculated to arrive at a simple discrimination index. The power of different distractors was also assessed. A grid for results was developed to help make the task simple and systematic as shown below.

SCHOOL NAME:

Item		Options				Facility	Discrimination	Facility for Females	Facility for Moles
		A	B	C	D				
1	N_u N_l								
2	N_u N_l								
3	N_u N_l								
4	N_u N_l								

Facility values are given by:

$$F = \frac{\text{N CORRECT}}{N} \times 100$$

where N CORRECT is the number of candidates getting the item correct and N is the total number of candidates.

Discrimination values are given by:

$$D = \frac{N_u - N_l}{N/2}$$

where N_u = Score of upper 50%
N_L = Score of lower 50%

A simple measure of reliability was also calculated - the Kuder Richardson KR21.

$$R\,(KR21) = \frac{K\,(1-(M\,(K-M)/KS^2))}{K-1}$$

K = number of test items (30)
M = Mean Score (Arithmetic Mean)
S = standard deviation of test scores

KR21 tests if all items measure the same thing (homogeneity) and is roughly equivalent to split-half tests of reliability. It is not appropriate for speeded tests and is not an indication of constancy of score over time.

Analysis of Item Characteristics

A summary of the performance of the test is given below:

	School 1	School 2	School 3	School 4	School 5	School 6
N	64	78	48	41	38	70
Xav	16.56	16.24	14.80	15.07	18.55	20.43
Xbav	17.03	16.05	16.40	15.83	18.36	21.10
Xgav	16.09	16.83	13.20	14.00	18.92	19.72
O^-	3.07	3.51	3.88	3.05	2.77	3.35
R	0.22	0.41	0.52	0.20	0.08	0.43

Where

N = number of candidates analysed
Xav = average score
Xbav = average for boys
Xgav = average for girls
O^- = standard deviation
R KR21 reliability

The analysis for the first five schools was aggregated since these schools were all normal public schools. The analysis of the sixth school, which was residential and an institution with a selected intake, was undertaken separately. Summary results are shown next page.

Item	Schools 1 - 5		School 6	
	Facility	Discrimination	Facility	Discrimination
1	97.1	0.04	98.5	0.03
2	84.6	0.13	100	0.00
3	77.9	0.04	90.0	0.14
4	56.0	0.31	78.5	0.26
5	63.0	0.12	68.6	0.40
6	33.8	0.06	50.0	0.20
7	17.9	0.16	34.3	0.29
8	99.2	0.02	94.3	0.11
9	17.5	-0.03	24.3	0.09
10	15.8	-0.03	21.4	0.20
11	81.7	0.12	87.1	0.09
12	35.0	0.23	54.3	0.51
13	65.0	0.15	80.0	0.29
14	66.7	0.07	75.7	0.20
15	71.7	0.27	74.3	0.34
16	21.0	0.13	34.3	0.06
17	55.6	0.34	78.6	0.37
18	73.8	0.31	85.7	0.29
19	79.7	0.10	88.6	0.23
20	62.9	0.35	60.0	0.51
21	20.9	0.10	41.4	0.43
22	24.0	0.32	77.1	0.34
23	24.5	0.24	50.0	0.60
24	54.0	0.36	81.4	0.31
25	26.9	0.27	48.6	0.51
26	68.5	0.17	60.0	0.34
27	56.8	0.28	67.1	0.49
28	36.1	0.42	61.1	0.26
29	59.4	0.06	97.1	0.06
30	20.7	0.04	41.4	0.43
Average	52.3	0.17	66.8	0.28

From this it can be seen that the average facility in the five schools is at a level we would expect if we wished to maximize discrimination i.e. about 50%. In fact the test discriminates much more effectively in School 6 (0.28 compared to 0.17 on average). If this were a real test then we should be concerned that the items that were designed worked best in separating the performance of more able pupils but not so well with more average performers.

Other data indicate that some items (e.g. 3, 8, 9, 10, 15, 17, 18, 20, 22, 25, 28, 29, 30) were more difficult for girls than boys. It was also true that the data on item performance showed that the power of distractors varied widely from item to item and the reasons for this were examined.

Concluding Remarks

The item writing exercise simulated the creation of a test instrument for Primary Science and Agriculture as part of a training exercise. Participants were unfamiliar with the Kenyan curriculum on which material was based and some had not been directly involved in test construction and analysis previously. The construction of valid and reliable test papers of this kind would be a task that would normally occupy several technically competent staff for some months. It was therefore impressive that within less than a week we were able to specify, develop, try out, and analyse the performance of a test instrument that we designed.

The primary purpose of this exercise was to develop skills in creating test items. The pre-test that we used had to be modest in scale and the sampling employed could not be representative of the population of pupils in Kenyan schools. Its purpose was to assess our success in creating items rather than reach conclusions about the performance of pupils that might have more general applicability. In this the exercise succeeded.

The analysis drew attention to a number of problems in item construction that included

- items which discriminated poorly or in some cases negatively;

- items where the performance difference between boys and girls was exceptionally large;

- items which were too difficult or too easy to be useful in discriminating performance;

- items where distractors had very uneven power and where some options were so implausible no candidates chose them; items that required a lot of time to understand and complete;

- items that required high quality diagrams to function as intended;

- items which may test language facility more than an intellectual skill.

The results of the trial also provided food for thought in a number of areas:

(1) It was interesting that the instrument designed appeared to function more as expected in School 6 than in the other five schools. In School 6 discrimination was relatively high despite the test being quite easy for most candidates. This implies that most items were understood as intended and the best pupils performed well on each item. In the other schools the picture was more mixed, suggesting that the participants might be better at writing items for the best pupils.

(2) The fact that a number of items appeared easier for boys suggested the possibility that it was the form of the item rather than the intellectual skill that might be responsible for the differentiation. It was not possible to resolve this question without more systematic research. If those items which favoured boys were removed from the test the overall differences in performance would of course reduce. This might or might not be considered desirable depending on what the reasons were for the differential performance on some items rather than others.

(3) The predictions that participants made of the performance of items were fairly inaccurate and on average not much better than guessing. This can be partly explained by their unfamiliarity with Kenyan pupils. It did illustrate the importance of pre-testing items wherever possible to reduce the possibility of poor quality items surviving into national test instruments.

(4) The item construction process resulted in a number of over-complex items being produced that were judged inappropriate for the final instrument. There may be a temptation to design items that are cleverly conceived and impress other item writers but that are too difficult for many candidates.

(5) The importance of analysis of item performance was evident. It helped explain why many items did not function as intended. It suggested that much might be learned by combining examination performance data with teaching and learning studies to establish why differences in performance emerged and how they might be reduced. This was seen as a challenge for the future.

2.4. Bibliography

Black, H.D. & Dockrell, W.B. (1984) Criterion referenced assessment in the classroom. Scottish Council for Research in Education. Edinburgh.

Bloom, B.S., Hastings, J.T. & Madaus, G.F. (1971) Handbook on formative and summative evaluation of student learning. McGraw Hill. New York.

Capper, J. (March 1994) Testing to Learn... Learning to Test. A Policymaker's Guide to Better Educational Testing. Executive Summary. Academy for Educational Development. Washington D.C.

Chimwenje, C. (1993) Primary School Leaving Examinations in Malawi. PhD Thesis, University of Sussex/England.

Colclough, C. with Lewin, K. (1993) Educating All the Children. Strategies for Primary Schooling in the South. Clarendon Press. Oxford.

Dearing, R. (1993) The National Curriculum and its Assessment. Interim Report. Schools Curriculum and Assessment Council. London.

Dore, R.P. (1976) The Diploma Disease. Unwin Education. London.

Ebel, R.L./Frisbie, D.A. (1991) Essentials of Educational Measurement. 5th Edition. Prentice Hall.

Eisner, E. (1968) Instructional and Expressive Objectives. AERA Monographs on Curriculum Evaluation No. 3. Chicago.

Gagne, R.M. (1965) The Conditions of Learning. Holt, Rinehart and Winston. New York.

Harding, J. (July 1992) Breaking the barrier: girls in science education. Unesco: IIEP. Paris.

ILO/JASPA (1981) The Paper Qualification Syndrome and the Unemployment of School Leavers. Contributor to Vol. I (East Africa) and Vol. II (West Africa). International Labour Organisation; Jobs and Skills Programme for Africa. Addis Ababa.

Kellaghan, T./Greaney, V. (1992) Using Examinations to Improve Education. A Study in Fourteen African Countries. World Bank Technical Paper No. 165. The World Bank. Washington D.C.

Keeves, J.P. (1994) National examinations: design, procedure and reporting. Unesco: IIEP. Paris.

Lewin, K. (1992) Science education in developing countries: issues and perspectives for planners. Unesco: IIEP. Paris.

Mager, R.F. (1962) Preparing Instructional Objectives. Fearon Publishers. Palo Alto.

Mauritius Examination Syndicate (Oct. 1992) Learning Competencies For All. Essential and Desirable Learning Competencies for Standards 4, 5 and 6. Towards a holistic approach to examination reform.

Miller, R. (1962) Analysis and Specification of Behaviour for Training. In: Glaser, R.L. (ed.) Training research and education. University of Pittsburgh Press. Pittsburgh, PA.

Njabili, A.F. (1993) Public Examination: A Tool For Curriculum Evaluation. Mture Publishers. Dar-es-Salaam.

Obura, A.P. (1991) Changing Images. Potrayal of Girls and Women in Kenyan Textbooks.

ACTS Press. Nairobi, Kenya.

Oxenham, J. (ed.) (1984) Education versus Qualification. Unwin Education. London

Pennycuick, D. (1990) Factors Influencing the Introduction of Continuous Assessment Systems in Developing Countries. In: Layton, D. (ed.) Innovations in science and technology education. Vol. III. Unesco. Paris, pp. 139-152.

Popham, W.J. (1984) Specifying the Domain of Content Behaviours. In: Berk, R.A. (ed.) A Guide to Criterion-Referenced Test Construction. John Hopkins University Press. Baltimore.

Popham, W.J./Baker, E.L. (1970) Establishing Instructional Goals. Prentice Hall.

Ross, A. (1994) Science Achievement in Papua New Guinea. D Phil. Thesis, University of Sussex, England.

Satterly, D. (1989) Assessments in Schools. 2nd edition. Blackwell. Oxford.

Shephard, L.A. (1991) Will National Tests Improve Student Learning. In: Phi Delta Kappa, November.

Somerset, H.C.A. (1982) Examination Reform: The Kenya Experience. Report prepared for the World Bank, Washington D.C.

Somerset, H.C.A. (1988) Examinations as an Instrument to Improve Pedagogy. In: Heyneman, S.P. & Fägerlind, I. (eds.) University Examinations and Standardized Testing - Principles, Experiences and Policy Options. World Bank Technical Paper No. 78. Washington D.C.

Tsayang, G.T. & Ngwako, A.D. et al. (eds.) (Sept. 1989) Gender and Education. Proceedings of a Workshop. Occasional Paper No. 2. University of Botswana. Gaborone.

Tyler, R.W. (1964) Some persistent questions in defining objectives. In: Lindvall (ed.) Defining Educational Objectives. University of Pittsburgh Press.

Unesco (1993) World Education Report 1993. Unesco Publishing.

Wolf, A. (1993) Assessment Issues and Problems in a Criterion Referenced System. Further Education Unit.

3. Primary School Examinations in Kenya with Special Reference to Item Construction for Science and Agriculture

3.1. The Use of Examination Results for Monitoring Performance of Schools, Districts and Provinces

Francis K. Kyalo, Kenya National Examinations Council

Kenyans wait for the results of national examinations with awe and trepidation. This is so because many people erroneously believe that failing in examinations spells doom. This is attributable to the fact that a person failing in examinations may find it exceedingly difficult either to find employment or to continue with further education or training. Thus, an examination has a tremendous influence on schools, districts and the education system in general. Any information pertaining to examination results is taken with a lot of seriousness by the students, teachers, parents, education administrators and the public at large.

The curriculum which was followed in Kenya between 1963 and 1984 was seen by the»Report of the Presidential Working Party on a Second University in Kenya (1981)«as unadaptable to the changing needs of society.

The Certificate of Primary Education (CPE) examination then consisted of three papers, namely: English, Mathematics and a General Paper consisting of Geography, History & Civics and General Science. To most candidates/school-leavers who did not proceed to the next cycle of education, this general certificate was terminal and they were expected to join the work force. Unfortunately, they had no employable skills.

In the new 8.4.4. system of education, that was examined for the first time in 1985, the primary education curriculum was revamped in structure, duration and content. Previously, candidates had been examined and certified at the completion of seven years of primary education. With the new system of education, the duration was increased to eight years and more emphasis was placed on the acquisition of practical skills. The teaching of pre-vocational subjects such as Art & Craft, Agriculture, Business Education, Music and Home Science was taken more seriously than in the previous primary school curriculum which emphasised the purely academic subjects. Learners are thus being equipped at every level with adequate skills and knowledge for self-employment. It is now much more the responsibility of the candidate to make good use of the knowledge and skills gained through the school system. The certificate is therefore not an automatic ticket to employment.

As a matter of policy, it was decided that the students would be tested by means of a national written examination - Kenya Certificate of Primary Education (KCPE) - and assessment of practical work at the school level. This assessment of the practical skills was to be conducted by the Ministry of Education, which was also to issue the results in a revamped school-leaving certificate at the end of the course. The KCPE was to be conducted by the Kenya National Examinations Council.

This called for a change in the examination system. The former Certificate of Primary Education (CPE) was replaced by the Kenya Certificate in Primary Education examination (KCPE) which is tested in seven papers that include, English Language and Composition; Kiswahili Language and Composition; Mathematics; Science & Agriculture; Geography, History & Civics, Religious Education; Art & Craft and Music; Home Science and Business Education.

In the KCPE examination psychomotor skills are tested indirectly. It is intended that questions that are set based on experimental situations test, albeit indirectly, the acquisition, or lack, of the practical skills required for a candidate to respond correctly to such questions.

Question 27, in the 1991 KCPE Science Section, could be cited as an example of questions that are set to test acquisition of practical skills by the candidates.

27. The diagram below represents a periscope, an object and an observer's eye.

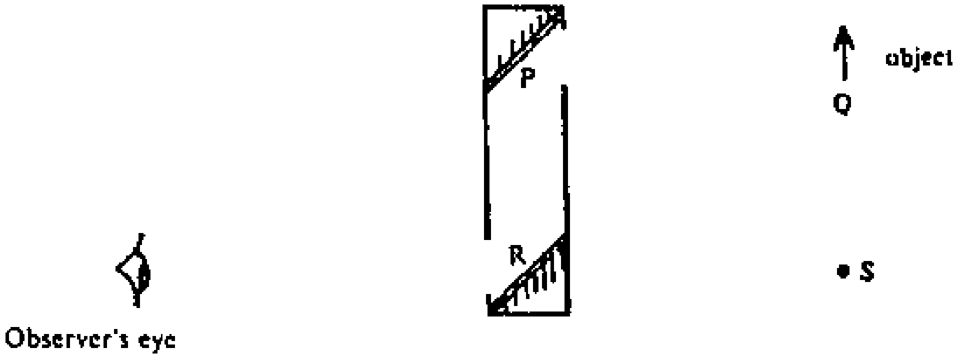

The image of the object as seen by the observer will appear at

A. **P**
B. **Q**
C. **R**
D. **S**

A periscope uses plain mirrors and therefore the candidates were expected to use their knowledge of the properties of a plain mirror to answer this question. The small percentage of candidates who scored this item correctly shows that most candidates did not have this knowledge. More than half of the candidates in the sample chose option C which shows that the image is formed on the mirror. Anyone who has ever used a plain mirror to view himself/herself knows that this is not true.

One's image always appears to be formed behind the mirror. Simple experiments done by the pupils using plain mirrors would help them to know that the image of an object placed in front of a plain mirror is formed behind the mirror. Thus teachers should seize every possible opportunity to have their pupils perform simple experiments to make their acquisition of scientific concepts easier and faster.

In due course, the Kenya National Examination Council (KNEC) in conjunction with the Ministry of Education will assemble data on the performance of candidates in the national examinations and in the assessment of practical skills at the school level to establish the degree of correlation between the two modes of assessment. This will be done to enhance the quality of instruction at the school level for the acquisition of practical skills.

Before the inception of the KCPE examination, the possibility of the KNEC sending out, to primary schools assessors for the practical component of such subjects as Agriculture, Art & Craft, Music and Home Science was explored. However, this was found to be practically impossible due to the following constraints:

- The present KCPE candidature is quite large (421,617 in 1992 in 12,900 schools) and the logistics of practical tests for such a large number of pupils are overwhelming.
- The short duration in which to administer, mark, process and release results in time for those who qualify to go to secondary schools.
- Lack of materials, apparatus and facilities to conduct practical examinations.
- The large expense that a practical examination would entail.
- The varied conditions in individual primary schools which would make the results of such

an examination inequitable and therefore invalid and unreliable. The results of such an examination, therefore, cannot be used as a basis of certification and ranking of candidates at a national level.

In view of these constraints, practical skills are, in addition to KCPE examinations, assessed at the school level by the teachers and external assesssors through projects that are recommended, organized and monitored by the Inspectorate Section of the Ministry of Education. The grades obtained from this school-based assessment are used to award each pupil a School Leaving Certificate, while the scores they obtain in the national examination are used to award each pupil a KCPE Certificate and also to rank them according to their achievement.

The results of national examinations are used to monitor performance of schools and districts. Every year, after the release of KCPE results, the KNEC prepares schools' and districts' order of merit lists. Such order of merit lists are based on the schools' or districts' mean scores. There are two kinds of order of merit lists. One is based on the mean scores on overall performance while the other is based on the performance in individual subjects. Thus, the standing of a school or district in the overall performance, or in each subject, can be determined.

Initially, the order of merit was done for all schools, irrespective of their size. This generated a lot of public outcry because the comparison was regarded as unfair, especially between the large and small schools. The current practice is to compare similar schools in terms of the number of candidates. The order of merit lists enable each school and district to compare its performance against that of other schools and districts. Each school, or district, could also compare its current performance with its previous performance. Thus any improvement, or otherwise, in performance can be noted from the order of merit. Such information has been found to have the following positive influences on the education system:

- The schools and districts that perform very well are motivated to work even harder in order to maintain or even improve further.

- The schools that perform poorly are stimulated to work harder so that they too can be at the top of the order of merit list. In fact, each year a number of schools and districts improve their performance significantly.

  This has been made possible by the schools and districts tightening educational guidance, school supervision or even by removing inefficient headteachers, teachers and field staff. In addition, the parents exert pressure and therefore the school authorities are forced to seek for ways and means of improving the performance.

- Ranking of schools and districts stimulates fruitful competition between schools and districts.

- The quality and frequency of school inspection and supervision has improved. In an attempt to improve performance in their regions, the District Inspectors and Assistant Primary School Inspectors are visiting schools more frequently than ever before.

- Teachers in some districts organize mock examinations at the district or divisional levels. In groups, they set and moderate test items to almost the same standard as the Council examinations. The experience so acquired has made the teachers more effective in their instructional duties, in addition to improving their performance.

- Teachers, nowadays, are paying more attention than ever before to the curriculum requirements, its interpretation and implementation. They are more committed to their instructional duties. They teach before and after the official working hours.

- It has encouraged the school committees and the parents'/teachers' associations in schools to be more interested, not only in the acquisition of physical facilities, but also in the quality of instructional programmes of the schools. In some schools, for instance, the teachers are paid a honorarium for working outside their normal working time.

Some negative influences of the ranking of schools and districts have been cited by educators and members of the public. One such influence is where teachers force pupils to repeat some classes. This has already been rectified by the Ministry of Education by issuing a warning that such a practice should stop. This has borne results because the increase of candidates in 1992 (421,167) over last year's (362,093) is quite significant. This also shows that the rate of repetition is going down. Another negative influence has been the overworking of the primary school pupils by teachers who give instruction outside the official working time. This practice has been a result of overloaded syllabi. The problem has, however, been addressed during the recent review of the curricula for the 8.4.4 education system. The syllabi have either been pruned or re-organized in 1992 to facilitate effective coverage within the time allocated for the teaching of each of the subjects.

Similarly, after the release of the KCPE examination results, the Council prepares a KCPE Newsletter. In this Newsletter, comments on the candidates' performance in individual questions, and papers as a whole, are provided. The candidates' weaknesses, what was expected of them and suggestions for improvement in the teaching and learning procedures are highlighted. Corrective measures are also recommended where the teachers and pupils seem to misinterpret the official curriculum. Thus examination results are used to monitor how the schools are implementing the curriculum in the process of curriculum appraisal. Furthermore, the teachers are given an opportunity to suggest more effective instructional methods to the KNEC for dissemination to other schools. This is done by means of a questionnaire at the end of each issue of the KCPE Newsletter.

National examinations in Kenya generate a lot of data on candidates' performance. Some of this data reflects the manner in which the requirements of the curriculum are interpreted by the teachers. For instance, the KCPE Science syllabus may require students to be involved in the learning/teaching situation by being allowed to carry out many simple experiments, make and record their observations, and draw conclusions from these observations. Well-designed Science examination items can be developed to test whether or not this requirement has been met by the teachers.

The KNEC uses the data generated by item analysis to highlight incorrect interpretation of the official curriculum by the teachers and pupils alike. The data so generated is then used to suggest corrective measures to be taken by those charged with the responsibility of developing and implementing the curriculum.

A KCPE item, such as the one cited below, clearly shows how it is possible to set an item which tests how well the candidates have acquired the practical skills as per the syllabus requirements.

Question 9 (1991 KCPE Science Section)

A pupil constructed a simple anemometer as shown in the diagram below.

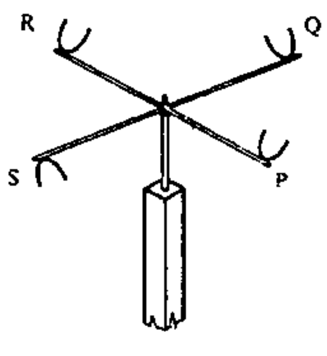

Which one of the cups should be correctly placed so that the instrument can function properly?

A. **P**
B. **Q**
C. **R**
D. **S**

The question was testing the candidates' understanding of the construction and use of a simple anemometer. Candidates who answered the question correctly were above average in their performance in the Science section of the paper. The fact that about half of the candidates in the sample chose option D, which is incorrect, suggests that most pupils had never constructed or used an anemometer. In most cases, its use may have been illustrated to them by means of a drawing on the chalkboard and therefore the pupils found it difficult to understand. If pupils were given a chance to construct and use an anemometer, very few would have problems with such a question.

Thus, well-designed test items assist in strengthening the process of curriculum implementation and appraisal.

The foregoing discussion suggests very clearly that examinations have a very positive role to play in educational development. In order to maximize their contribution to educational development, it is necessary that examinations reinforce the objectives for which they are meant. They can do this by testing the knowledge and skills that are appropriate and relevant to the majority of the candidates. Finally, examinations should also assist in the process of curriculum implementation and appraisal.

3.2. Testing and Monitoring Procedures Developed for Primary Schools

Paul M. Wasanga, Kenya National Examinations Council

The Purpose of Testing and Monitoring Pupils

When trying to establish the worth of anything, and hence evaluate it, we need information and yardsticks against which to judge not only the information we require, but the information we receive. In education we are basically concerned with the worth of such things as curricula, teaching methods and course materials. One major significant source of information, although not the only one, is the performance of those being taught -»the pupils«. Since performance can be determined by testing, one needs to concern oneself with the question, why test (assess) and monitor pupils?

Below are some reasons that have been advanced for assessment and monitoring of pupils. It is in order to:

- gather information about a wide range of the pupils' characteristics as a feedback for making decisions;
- accumulate records of progress for the pupils;
- provide information from which teachers can obtain insights into their own effectiveness in teaching;
- allocate pupils to sets or groups;
- compare new teaching materials with old ones;
- give incentive to learning and aid to remembering;

• determine pupils’ strengths and weaknesses;

• predict pupils’ future performance;

• determine the effectiveness of the methods of instruction;

• determine the suitable candidates for further education in institutions of higher learning (e.g. secondary schools);

• assign individual pupils grades that show how different their abilities are from those of other pupils.

To be able to carry out all the above tasks it is important to develop measurement procedures that can fulfil such requirements well. The procedures used to assess and monitor the primary school pupils in Kenya are discussed below.

Methods Developed for Testing and Monitoring Primary School Pupils in Kenya

The primary school pupils in Kenya are assessed using two methods, school-based continuous assessment and Kenya Certificate of Primary Education (KCPE) examination offered by the Kenya National Examinations Council.

School-based Continuous Assessment

Continuous assessment involves updating of judgements about performance of the pupils. It therefore should be:

- systematic;
- objective;
- comprehensive;
- cumulative and
- guidance-oriented.

Many educators hold the view that continuous assessment of the pupils is best carried out by the class teacher. This, of course, is based on the assumption that the teacher is almost always in close contact with the student and his/her assessment should therefore provide a reliable and valid assessment of the pupils’ performance. Since such an assessment is done in schools by the teachers, it is called school-based continuous assessment.

<u>Instruments Used for School-based Assessment</u>

To determine the extent of the pupils’ learning, various instruments are used to measure the pupils’ performance in Kenyan primary schools. Some of the commonly used instruments are:

• Exercises

These are questions, assignments, quizzes etc. set and administered by class teachers to pupils at regular intervals or at the end of a specific topic. Pupils are expected to complete the exercise during class-time/period and hand over the work to the teacher. The main aim of these exercises is to determine whether the pupils have mastered/learned the topic covered. Thus, most of such exercises normally test recall of knowledge.

• Terminal tests

These are tests that are administered by the teacher/school at the end of each term. Such tests cover topics/subject matter taught during the term. These tests are done under controlled time limits and similar conditions. Such tests normally sample all major topics covered in a term. These tests are more valid than the exercises because, although the teachers who set them may not have experience in setting tests that measure all the skills, the tests do not test recall of facts only.

• Home-work

This is another method used to test and monitor pupils' progress in Kenyan primary schools. In this method the pupils are assigned work at the end of a lesson. The pupils then take it home. There is no time restriction and the pupils are even free to consult books, friends or even parents. These home-work exercises reinforce teaching and enable the pupils to identify areas not clearly understood during class period.

• Projects

In addition to the final examination (KCPE) the primary school pupils are also assessed by their teachers through projects recommended by the inspectorate of the Ministry of Education. In the Kenyan context, a project may be defined as any set task from which time constraints have been largely removed.

The projects offered to the primary school pupils are normally chosen from the courses which are supposed to have been covered in Standard 7 and 8; for example in Art and Craft, sculpture, containers, body covers, fabric decoration, graphic design, wood work, metal work, leather work etc. may be chosen as projects, while in Music pupils may be asked to make musical instruments. All the other practically oriented subjects like Science and Home Science are organized along similar lines.

Marks obtained from such course work (projects) are normally incorporated in the pupils' leaving certificates.

• Zonal/district organized tests

These are tests that are set and administered by teachers in zones/divisions or even in districts. These tests might also be referred to as inter-school tests. To set these tests, a number of experienced teachers is selected from different schools in the particular zone. These teachers set the tests, and selected officials organize the administration and marking of such tests. Zonal tests are usually given to primary pupils at the end of class 7. Marks obtained from such tests are used to predict the performance of the pupils in the Kenya Certificate of Primary Education examination.

• Fieldwork

Fieldwork involves a visit to and the study of an area outside the classroom by the pupils. Fieldwork calls for the pupils' skill in observation and mastery of concepts and accurate recordings. Before the fieldwork starts, the teacher normally identifies the area of study and the task the pupils are expected to carry out. The teacher then visits the site, and arranges for transport if any is required. During fieldwork pupils are expected to discuss their observations and record them. The teacher then may ask the pupils to write a report. The teacher gives marks to the pupils based on their recordings and reports.

Use of the Information Obtained from School-based Continuous Assessment

The information obtained from school-based assessment is usually kept by the teachers and also by the school administration. Such information is used for:

- gauging the teachers' effectiveness in teaching;
- guiding teaching;
- providing motivation to the pupils;
- providing feedback information to the parents and other interested people to aid counselling and decision-making;

• comparing the pupils with others from different schools and suggesting areas of improvement;

• continuity of performance of the pupil.

This information should therefore be stored in such a way that it is:

• permanent;
• easily understood;
• easily interpreted;
• easily retrieved.

<u>Problems Associated with School-based Continuous Assessment</u>

These include:

• inflation of scores;

• fake scores;

• missing scores;

• absent pupils;

• testing of recall of facts by the teachers because of lack of knowledge on measurement and time for writing questions that test higher abilities;

• unreliability of scores;

• subjectivity of teachers;

• unavailability of trained teachers;

• lack of uniformity in facilities available in primary schools across the country.

Because no system has been developed to eliminate such problems, in Kenya continuous assessment scores are not included in the Kenya National Examinations Council certificate for primary school leavers.

Kenya Certificate of Primary Education Examination

At the end of the eight years of primary schooling the Kenya National Examinations Council offers a written examination. This examination is called the Kenya Certificate of Primary Education (KCPE). This examination replaced the unpopular Certificate of Primary Education (CPE) which has been accused of being biased towards recall questions only and failing to adequately examine practical skills.

The Kenya Certificate of Primary Education examination offers a broader concept of assessment by testing many subjects and more complex cognitive processes like reasoning. This is demonstrated by the questions that are designed to test practical skills. These questions are set in such a way that they are able to sort out those who have been exposed to practical skills and those who have not. This is especially so for papers like Science and Agriculture, Art, Craft and Music, Home Science and Business Education.

To come up with questions that test practical skills and other higher abilities, using multiple-choice format is not a simple matter. The Kenya National Examinations Council, however, uses experts and experienced examiners to develop papers that meet this challenge. This, of course, involves hard work and dedication on the part of those who set and moderate such questions. A discussion of what goes on during setting and moderation of Science questions is illustrated below.

Setting of Science Questions at KCPE Level

Science questions are set by a group of experts who have a good knowledge of the primary school Science curriculum. These experts are drawn from the whole country. Normally, ten experts are involved in this exercise. The first exercise during the setting involves drawing a table of specification.

To draw such a table, the experts have not only to be conversant with the objectives of the curriculum but also have to carefully re-study them. This is done so as to make sure that all the content in the syllabus is tested and also that all the skills are tested. Below is an example of a table of specification drawn by setters and moderators for Primary Science KCPE examination.

Table of Specification for Science KCPE

Abilities	Knowledge	Comprehension	Application	Higher Abilities	Total
Content Area					
1. Energy	1	1	1		3
2. Living Things	3	2	1	2	8
3. Properties of Matter	1	1	2	2	6
4. Environment		1		1	2
5. Making Work Easier		1	3	1	5
6. Weather and Astronomy		2			2
7. Soil	1	1			2
8. Health Education	1	1			2
Total	7	10	7	6	30
	23.33%	33.33%	23.33%	20%	

This table of specification shows that the content in primary science can be summarized in eight broad areas. According to the objectives in the syllabus the skills are weighted. Using this table, questions are set in such a way that:

- 23.33% of them (7 questions) test knowledge (recall of knowledge);
- 33.33% comprehension (10 questions);
- 23.33% application (7 questions);
- 20% higher abilities (6 questions).

Thus, a paper set using this table does not test recall of facts only but also all other skills demanded by the curriculum. Below are some questions that have been used before to test skills other than knowledge.

(1) Question 9, KCPE Science 1991:

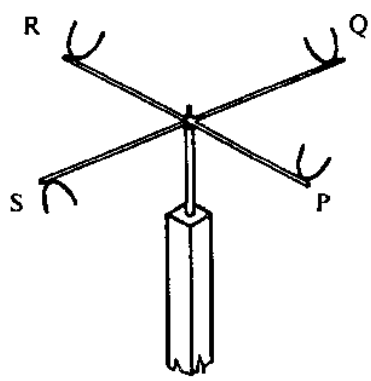

A pupil constructed a simple anemometer as shown in the diagram.

Which one of the cups should be correctly placed so that the instrument can function properly?

A. **P**
B. **Q**
C. **R**
D. **S**

This question requires the candidate first to have knowledge of what an anemometer is (an instrument used for measuring the force/speed of wind), and then look at the diagram and work out which cup is placed wrongly. This question cannot be said to test recall only; it is also testing a practical skill because the candidate has to work out how the cups should be placed for the instrument to function properly.

(2) Question 12, KCPE Science 1988:

Study the arrangement shown in the diagram below and answer the question that follows.

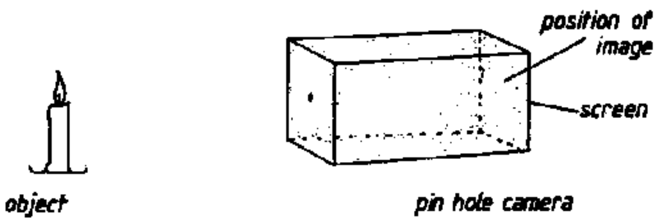

Which one of the following statements is correct? The image formed on the screen is

A. upside down
B. brighter than the object
C. round in shape
D. bigger than the object.

The question requires the candidate to construct lines from the object through the pin-hole to the screen so as to determine how the image would be. Obviously this cannot be recall.

Although the question itself is a multiple-choice question the skill tested here is a practical skill which involves reasoning. The two questions below serve as further examples of such questions.

(3) Question 4, KCPE Science 1990:

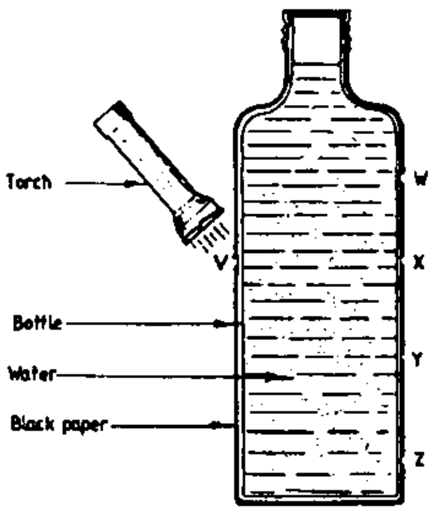

Kamau filled a transparent bottle with water and then covered it completely with black paper and made a small hole, **V**, on one side and four other small holes **W, X, Y, Z** on the opposite side. He shone light from a torch into the water as shown in the diagram.

At which point is the light most likely to shine out?

A. **W** B. **X** C. **Y** D. **Z**

(4) Question 16, KCPE Science 1989:

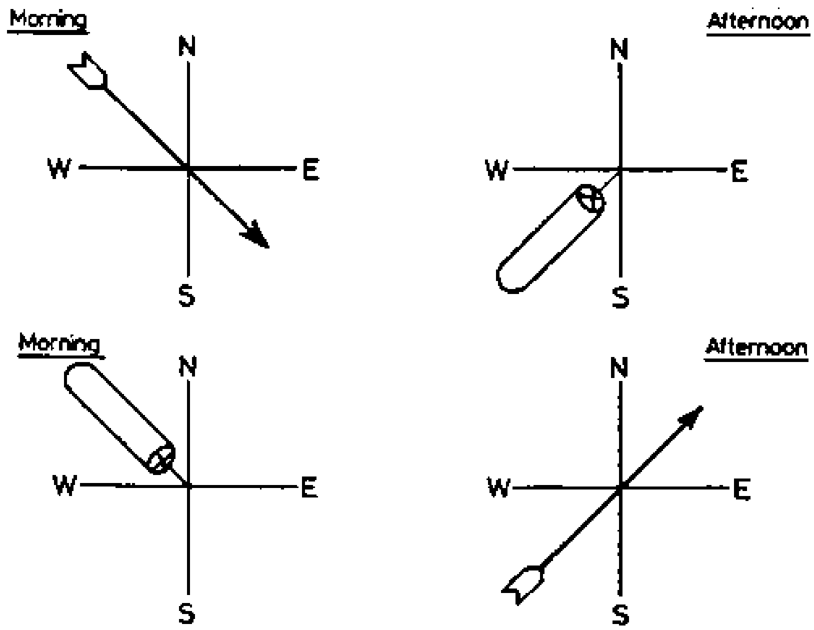

Omar made a wind vane and a wind sock and placed them in an open place. He then observed them in the morning and in the afternoon. The positions of the instruments were as shown in the diagram below.

Which one of the following gives the correct record of the wind direction for the day?

	Morning	Afternoon
A.	**SE**	**SW**
B.	**NW**	**NE**
C.	**NW**	**SW**
D.	**SE**	**NE**

(5) Question 12, KCPE Science 1989:

A fisherman looks down into a lake and sees a stationary fish as shown in the diagram below.

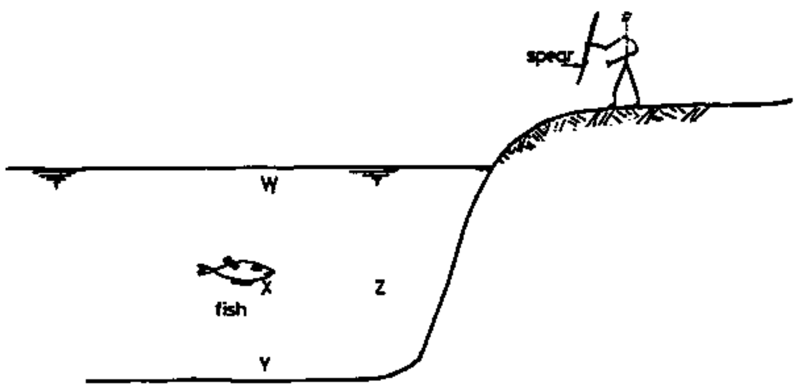

At what point should he aim his spear in order to have the **BEST** chance of hitting the fish?

A. **W**
B. **X**
C. **Y**
D. **Z**

Questions testing higher abilities than recall and practical skills are not confined to Science only. Such questions are also found in all the papers offered in the Kenya Certificate of Primary Education examination. Practical skills are, however, commonly tested in Art, Craft, Music, Agriculture, Home Science and Business Education as illustrated by the following questions.

(6) Question 19, KCPE Art and Craft 1988:

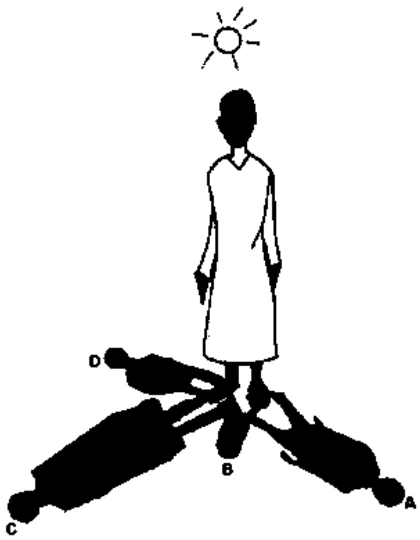

Which one of the shadows of the figure is correct if the sun is at the position as shown in the illustration?

(7) Question 52, KCPE Agriculture 1990:

Which one of the tools illustrated in the diagram below is suitable for digging a hard ground?

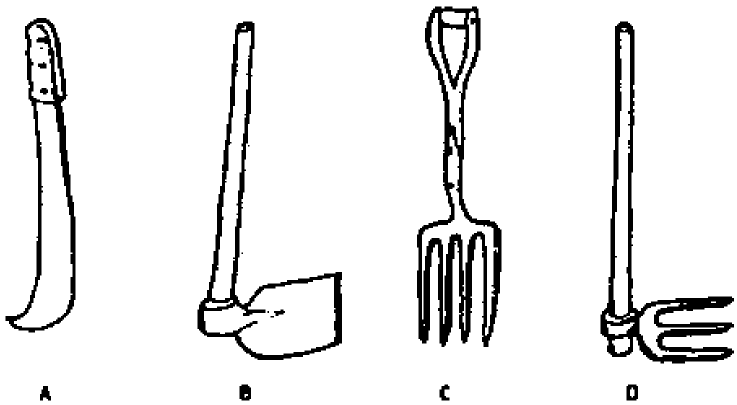

All the questions given as examples above clearly indicate that the Kenya National Examinations Council has made great strides towards the production of paper and pencil examinations that are capable of testing higher abilities and practical skills instead of recall of straightforward knowledge at primary school level. It should, however, be understood that the Kenya National Examinations Council examines and grades Std. 8 pupils from the results obtained in the Kenya Certificate of Primary Education only. The Kenya National

Examinations Council does not offer continuous assessment tests mainly because the KCPE candidature is very large (about 421,617 at present) and owing to the problems associated with continuous assessment discussed earlier.

<u>Use of KCPE Results for Monitoring Primary School Pupils</u>

Unlike school-based continuous assessment, which is used continuously to monitor pupils' progress in education, KCPE results are only used to advise the teachers on areas of weaknesses so that they may re-assess their strategies of teaching. This advice is normally given in the form of backwash documents written by the Council. This document is called the **KCPE Newsletter.**

The KCPE Newsletter discusses questions done poorly by the Std. 8 candidates and suggests how misconceptions, that lead to the poor performance in the particular questions, can be corrected. The two examples below serve to illustrate this point.

(1) Question 20, KCPE Science 1989:

Naposho walked to the top of the hill along the spiral road represented by the diagram below.

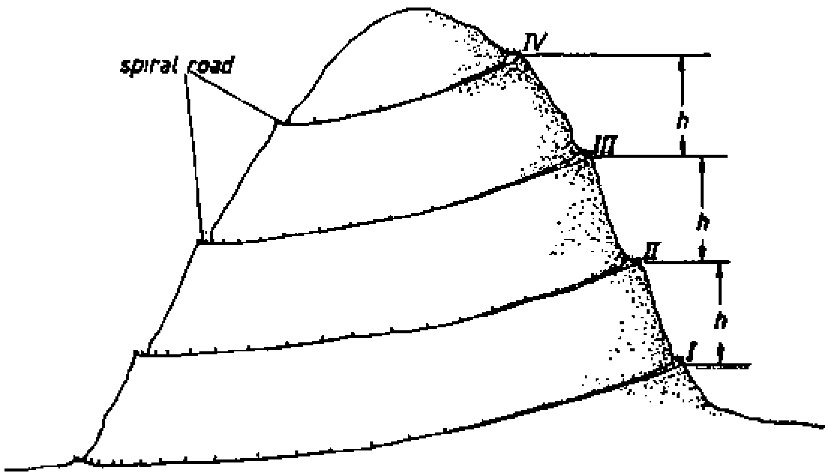

If the heights, **h** between the points are all the same, the effort used during the climbing was

- **A.** least between points II and III
- **B.** least between points III and IV
- **C.** least between points I and II
- **D.** the same between all the points

Response Pattern

Option	A	B	C*	D
% Choosing the Option	6.27%	33.97%	28.73%	30.55%
Mean Mark on other Questions	26.59	31.7.1	31.83	30.45

Question 20 was testing application knowledge in a new situation. It was scored correctly by only 28.73% of the candidates who were slightly of above average ability (had a mean mark of 31.38 compared to the sample mean of 21.01). Options B, C and D were chosen by candidates of almost similar ability because their means were less than a mark about the sample mean. This indicates that most candidates were only guessing the answer and hence the very small Discrimination Index (0.01). It is possible that most candidates failed to see the relationship between what they had learned in class and what was being tested in this question. Teachers are advised, therefore, to relate what pupils learn in class to real-life situations outside the classroom, for this is the ultimate goal in education. Knowledge that cannot be applied to solve problems and help us understand the world around us is dormant and hence worthless.

(2) Question 19, KCPE Art and Craft 1988:

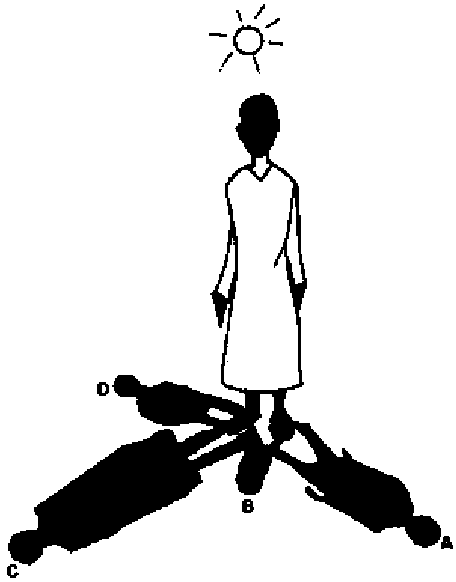

Which one of the shadows of the figure is correct if the sun is at the position as shown in the illustration?

Choice of the wrong options A, C and D in the question clearly indicates that the candidates may not have had practical exposure of body figures in the sun to enable them determine the sizes of shadows at various positions of the sun.

Conclusion

This paper outlined several ways in which the Kenyan primary school pupils are tested and monitored. School-based continuous assessment was looked upon as a systematic, objective and comprehensive way of collecting information about pupils. Exercises, terminal tests, home-work, projects, zonal/district organized tests and field-work were discussed as some of the instruments of doing this. The Kenya Certificate of Primary Education examination was also discussed as a procedure of testing and monitoring primary school pupils. It was demonstrated that questions offered at KCPE level do cover a variety of skills including practical skills.

3.3. Developing Tests for Complex Cognitive Processes

Obadiah Mucheru, Kenya National Examinations Council

Introduction

Most school curricula are designed with the explicit purpose of inculcating cognitive, psychomotor and affective skills in students. The success of any curriculum in fulfilling this objective can be assessed through the administration of tests at any stage of its implementation. Hence one of the major purposes of assessment in education is to investigate the extent to which students have gained from instruction.

The success of such an investigation would be enhanced if:

- the stock of knowledge possessed by students at the beginning of a programme of instruction is known;

- the objective of instruction or the structure of knowledge the students are expected to acquire is clearly stated and understood;

- the investigator can develop relevant testing instruments that can be used to show the gains made by students at any stage of instruction.

In the following we discuss the efforts item writers should make to ensure that they write items that test higher order thinking abilities.

Instructional Objectives

Instructional objectives are statements of what the instruction is expected to accomplish. Instructional objectives should be expressed in terms of quantifiable, measurable outcomes. Ebel (1963) distinguishes between the explicitly and implicitly stated instructional objectives and goes on to state that objectives that have been prepared to guide instructional planning or to communicate intended learning outcomes to students can also be used for evaluation planning and test development.

According to Ebel, an explicitly stated objective contains a verb that indicates, in operational, behavioural, or observable terms what the learner must do to demonstrate attainment of the objective. He gives the following examples of verbs that distinguish explicit and implicit statements of instructional objectives.

Verbs that Distinguish Explicit Statements of Instructional Objectives

Explicit, Behavioural	Implicit, Non Behavioural
Observable	Inferential
identify, explain, describe, summarize, select, develop, predict, differentiate, define, compare, write	know, consider, understand, discuss, realize, remember, judge, perceive, think about, comprehend, imagine

While developing tests the developer should translate the knowledge and abilities students are expected to acquire into tasks (test items) that require a demonstration of the students' achievements.

Taxonomy of Educational Achievements

A number of educators have developed taxonomies of educational outcomes for use by test developers. Three such classifications are shown in the figure below:

	Bloom's Taxonomy	Ebel's Relevance Guide	Gagne's Learning Outcomes
A.	Knowledge	Terminology Factual Information	Verbal Information
B.	Comprehension	Explanation	Intellectual Skills Cognitive Strategies
C.	Application	Calculation Prediction	
D.	Analysis		
E.	Synthesis		
F.	Evaluation	Recommended Action; Evaluation	
G.			Attitudes
H.			Motor Skills

The taxonomies classify all educational objectives into a hierarchy of categories based on presumed complexity (Gray, 1991). Each succeeding category involves behaviour believed to be more complex than the one previous and each is considered to be prerequisite to the next.

Cognitive Abilities

The term cognition refers to an act or process of knowing that involves the processing of sensory information i.e. perception, awareness and judgement. Cognitive learning includes problem solving, observation, concept formation and creative thinking. In more practical terms students who have followed a curriculum whose aim is to cultivate a wide range of cognitive skills should be expected to demonstrate some or all of the following abilities:

(1) Ability to identify terms and definitions.

(2) Ability to identify the reasons and conclusions of a piece of reasoning.

(3) Ability to judge whether an argument is sound.

(4) Ability to predict an outcome.

(5) Ability to explain or illustrate an event, principle etc.

(6) Ability to recommend appropriate action to solve a problem.

(7) Ability to solve specific mathematical problems.

The abilities numbered (2) - (7) are fairly complex in nature and any tests designed to elicit the extent of students' achievement of the abilities are likely to be complex.

However, most test developers are more acquainted with Bloom's taxonomy of the cognitive domain. In using Bloom's taxonomy it can be safely assumed that any item that tests beyond knowledge tests higher (complex) thinking abilities.[1]

[1] See 2.2.3. Table 2: Major Categories of Cognitive Objectives with Examples

In writing items the tasks should be stated in a style that will lead the student to engage in the desired thought processes.

Types of Questions for Different Cognitive Abilities

Knowledge - The pupil is expected to recall learnt information.

- name the - - -
- label the - - -
- state the procedure used to - - -
- define the term - - -
- describe how - - -

Comprehension - The pupil is required to show an understanding of the general nature of any new material or information.

- state the reasons for - - -
- indicate the advantages and disadvantages of - - -
- why is material/tool Q used for - - -?
- what does the phrase/statement/formular etc. tell us about - - -?
- state in words what the graph/picture etc. shows about - - - .

Application - The pupil is expected to apply what has been learnt to a problem which is new to him/her.

- what advice would you give to e.g. a farmer, a painter etc. to solve the problem of - - -?
- what is likely to result from - - - (unfamiliar set of circumstances)?

• use a graph to show that - - -
• solve - - - (a numerical problem).

NB: It is important to note that the problem whose solution is sought should be new to the target group, and not to the writer of the item. When we forget this cardinal rule, we often fail to recognize such questions as testing complex skills.

Analysis - The pupil is expected to be able to break down materials into its component parts and identify its organisation, structure and the relationship between parts etc.

• name the separate parts of - - - (e.g. a plant, a given instrument etc.)

• show in the form of a diagram the component parts of (a given instrument, object, tool etc.)

• identify the inconsistences that are apparent in (a given piece of evidence or between two or more pieces of evidence).

Synthesis - The pupil is expected to put together pieces of evidence, or information to produce the desired results e.g.

• the pupil should be able to use an organizing principle (temporal, behavioral, causal) to hold material together.

Evaluation - The pupil is supposed to judge the value of a given piece of information.

• is the evidence given adequate to enable one to make the conclusion that - - -?
• how reliable is the evidence available - - -?
• to what extent is (a given phenomenon) influenced by - - -?

Summary of General Rules for Setting Higher Order Items

• Avoid questions that start with words such as who? what? when? where?. These tend to solicit factual information.

• Use terms like **why? - - because - - which of the following statements - -** etc.

• Give a set of conditions and ask students to predict a future result.

• State a problem and ask students to suggest a solution.

• Always think of problems to be solved rather than facts to be remembered.

• Always strive to use real life problems - not abstract concepts.

• Avoid using long winded statements.

• Use as much stimulus materials as possible. These include diagrams, graphs, tables, pictures, etc. They are easier to write items on.

The Specifications Grid

The first task of a test developer is to draw a specifications grid to show the topics and skills to be tested and the number of items to be developed in each case. While most item writers use Bloom's taxonomy of the cognitive domain to indicate the skills to be tested other taxonomies may be used. In Science subjects it is not unusual to use science skill processes such as observation, measurement, recording, predicting, etc. instead of Bloom's taxonomy. The most important thing is to have a plan for the test to be developed.

Moderation

The moderation of items should be done by a panel of subject and measurement experts. They should scrutinize each item and improve it or discard it depending on its relevance to the desired goal. The moderating panel must ensure that:

- every item has face validity, i.e. each item appears to test what it purports to test;

- the intended key is the single correct or the best choice among the given responses;

- all the options are plausible and that the distractors are indisputably wrong;

- each item is set at a reasonable level of difficulty for the average candidate;

- the phrasing of each item is unambiguous;

- each item is independent i.e. picking the right answer in one item is not dependent on the student's ability to pick a correct answer in another item in the paper;

- the item does not contain irrelevant difficulty - e.g. long statements which can be shortened without changing the intended meaning;

- the item does not test trivial knowledge;

- the item is free from bias i.e. that the item neither gives an advantage nor a disadvantage to particular candidates on the basis of factors which are extraneous to the purpose of the test;

- each item correlates to the whole test;

- all diagrams are accurately drawn and labelled.

An item which does not meet any of the above criteria should either be improved or substituted.

Evaluation of Test Items for Bias

The evaluation of test items for bias is an important step in test development. The evaluation should be done by a person or persons who are truly conversant with the target population for whom the test is designed. It can be done at the moderation stage or after the moderation. The evaluation for bias can be done by asking a series of questions such as the following:

- Is the language used in the test items, as well as the activities reflected in the items, likely to be offensive to members of any group? i.e. Are the items culture free?

- Are the activities reflected in test items relevant to the life experiences of the persons responding to the items? e.g. Do the items have a rural or an urban bias?

- Are the connotations of key words and phrases in the test items essentially the same for all students?

- Are the test items written in a straightforward, uncomplicated, easily read manner?

- Is the content of test items so interesting to examinees that they will be distracted from the task at hand?

Arrangement of Items in the Test Paper

Most students are filled with anxiety when they are confronted with tests. This anxiety may boil over if the first few items in a test paper require the student to engage in complex thought processes. As a general rule a test paper should start with easier questions, the more difficult questions appearing towards the end.

Observations and Conclusions

• The term complex-cognitive skills can be used to refer to the skills that go beyond the knowledge or recall level.

• It is difficult for any two people or any two groups of experts to all the time agree on the skill a particular item is testing. The mental processes that the student has to engage in is the single most important determinant of the skill the item is testing.

• When items are meant to reveal whether the student can apply knowledge to solve new problems, care must be exercised to ensure that the problems are new to the student, not to the item writer.

• It is important for the item writers at any level to be fully conversant with what goes on in the classroom. They should also have a good mastery of the subject matter and the objectives of both the curriculum and the particular subject for which they are expected to produce items.

• The task in every test item must be clearly stated. The stem should be stated in the form of a question whenever possible.

• It is easier to test the higher abilities using the»best answer«rather than the»absolute correct answer«type of items.

• The moderation of a test paper should be regarded as a most important stage in test development. Moderators must be fully conversant with the requirements for education in the country. They should also be subject and measurement experts. And since elimination of bias is part of the moderation exercise, the moderators should be fully conversant with the target population.

References

Ebel, R.L. (1963) The Social Consequences of Educational Testing. In: Anastasi, A. (Ed.) Testing Problems in Perspective. American Council of Education.

Gray, L.R. (1991) Education Evaluation and Measurement Competences for Analysis and Application. 2nd Edition. Macmillan Publishing Company.

3.4. Skills in the Construction of Science Tests

Grace Kigoto, Kenya Institute of Education

Introduction

Constructing a good test is not easy, yet the curricular changes witnessed in many of our African countries, especially in the last decade, have demanded more rigorous testing. At the same time, sharp criticisms and bitter attacks have been raised against testing. But it is a well known fact that testing is an essential part of teaching and learning. Efforts have, therefore, to be made by one and all to acquire knowledge, skills and attitudes necessary for the construction of good tests.

Requirements for Constructing a Good Test

A good test can serve several purposes. For example:

- it can provide teachers with relevant information for improving instruction;

• it can help pupils improve their learning through motivation;
• it can facilitate educational planning and decision making.

The Kenya Certificate of Primary Education (KCPE) examination offered at the end of the primary cycle (8 years) is intended to guide in:

• ranking candidates according to their achievement in subjects and therefore selection to secondary schools;

• awarding certificates;

• data collection that can be used by teachers, curriculum developers and educational planners.

An item writer should possess an understanding of the following:

• the structure and goals of the curriculum to be tested;
• the behaviours and processes to be learned;
• the psychological and educational characteristics of the learner.

A good test must be carefully planned in order to serve the purpose it is intended for. The following procedures have been suggested:

• State the general objective of the course and define each objective of the unit in behavioural terms. (See Appendix I for action verbs to use in stating objectives behaviourally and Appendix II for Science Process Skills and Attitudes).

• Make an outline of the content to be covered or that already covered during the course.

• Prepare a table of specifications.

• Construct test items to measure the students' behaviour specified in the table of specifications.

Specifying Objectives to Be Tested

This indicates the learning outcomes that the test developer will accept as evidence that the lesson objectives have been achieved. Secondly, this specifies the student behaviour that is to be measured by test items.

Bloom's taxonomy of intellectual abilities and skills provides categories as follows:

Knowledge:	This provides mainly recall of knowledge e.g. terms, facts, rules and principles.
Comprehension:	This involves understanding of what is being communicated, so that the individual can make use of the material or idea.
Application:	This concerns the use of data, in particular to handle general ideas, rules of procedure or generalised methods, as demonstrated within the category.
Analysis:	The breakdown of information into its constituent elements or parts so that its ideas are made clear.
Synthesis:	Involves putting together elements and parts to form a whole. An individual can take a variety of data and arrange it in such a way as to constitute a pattern.
Evaluation:	This involves the ability to exercise judgement.

Outlining the Content

After specifying the objectives to be tested, the tests constructor should make an outline of the content to be covered by the test. This ensures adequate sampling of the subject matter of the course. This content outline should show specific elements of the content.

Preparing the Table of Specifications

This is the most crucial stage in the construction of a test, some times called a test blue-print. A table of specifications ensures balance and comprehensiveness of a test. The table has two dimensions. The first represents the different abilities that the student should display and the second represents the subject matter.

Table of Specifications: Science and Agriculture					
Skill	Knowledge	Comprehension	Application	Higher Abilities (Analysis, Synthesis, Evaluation)	Total
Content					
Health Education: Diseases & how to prevent them; Cleanliness	1	1	1	-	3
Energy: Sources, forms, uses and conservation	1	1	1	1	4
Making Work Easier: Construction	-	1:	1	-	2
Properties & Characteristics of Soil: Sedimentation, water retention, stickiness and use of locally available soil	1	1	1	-	3
Soil Fertility: Fertilizers, manures, mulching and soil erosion	1	1	1	1	4
Pollution: Pollutants and the environment	1	1	1	-	3
Land Utilization: Uses and farming systems	1	1	1	-	3
Farm Economics: Effect of spacing and fertilizer application, farm records and simple accounts	1	-	1	1	3
Total	7	7	8	3	25

Each row indicates the number of items to be used. It is important that the number of items on each area of content and to each objective in the table of specifications reflect the relative emphasis given during instruction.

Construction of Test Items

Depending on the purpose of the test and the mental abilities students should display, the test constructor will use different types of tests.

Free Response Type

In these, the student is expected to create rather than to choose a correct response. There are completion items and essay types. In completion items the student gives one or two words or a phrase to complete a sentence.

Essay type of question items are easy to construct and when done properly, they can measure complex learning outcomes. They allow for creativity and originality. However, there are disadvantages of using these tests. For example, they can be highly unreliable. It is also difficult to cover all topics using essay type of questions.

To be clear and specific, such action verbs like»describe«,»identify«,»list«,»compare«,»distinguish«,»give reasons for...«should be used when constructing essay questions. To increase reliability, the evaluator should prepare a marking scheme showing the main points expected and the distribution of marks.

Choice Items

These can be marked objectively and are easy to score. They are, however, difficult to construct and can be open to guessing. There are 3 types, namely, multiple-choice items, matching items and true-false. We shall only discuss multiple-choice items in this context.

A multiple-choice item has two parts: a stem and options. The stem can be written as a question, or an incomplete statement. Of the options, one is the answer or **key** while the other options are called **distractors.**

The following should be borne in mind when constructing multiple-choice items:

- The stem should be clear and should include a single problem only.
- Avoid placing the correct answer too frequently in any one position.
- Avoid having similar or related words in both stem and correct answer.
- Check that no item has more than one key.
- Avoid making the correct answer longer or shorter than the distractor.
- Avoid using choices that are unrelated to the subject of the item or are obviously wrong.
- All choices should be plausible.
- Each response should be preceded by an identifying number.
- As far as possible, avoid the use of negatives.
- Each item should stand on its own and no item should provide a clue to the answer of another item.
- The distractors must be a result of common errors or a misunderstanding. (See Appendix III - Test Construction Guidelines)

The above are steps/hints towards the construction of a good test. Before a test is finally declared good, the following needs to be done:

Content Analysis

The content validity is assessed. It is carried out to determine the extent to which test items adequately measure the objectives of the course.

Item Analysis

This takes place after the test has been administered to the learners. Item analysis helps one to identify the objectives and content that has been mastered by the learners and those that require further training. Two types are discussed here:

(1) Item Difficulty

This is calculated by getting the number of learners who got the item right out of the total number of learners who did the test e.g. if 16 out of 20 learners got the item correct, then we have 16/20 = 0.8. The higher the value of item difficulty, the easier the item is. This shows that most of the learners answered the item correctly and so had achieved the objective.

Another method of calculating item difficulty is by using the formula

$$P = \frac{C}{T}\ (100)$$

Where P is the percentage of pupils who answered the test item correctly, C is the number of pupils who answered the test item correctly, and T is the total number of pupils who attempted the test item.

E.g. suppose that an item is answered correctly by 40 students out of a total of 60 who attempted it. The level of difficulty P will be

$$P = \frac{40}{60}\ (100) = 66.6\%$$

(2) Item Discrimination

This shows the extent to which a test item distinguishes between bright learners and weak learners. The following method is used:

- arrange all marked answer papers of the learners in ascending order starting with the paper with lowest mark at the bottom;

- calculate the total number of learners at the top one-third and the bottom one-third. The middle one-third is NOT used;

- count the number of learners in the high score group who answered the item correctly. Call this H;

- count the number of learners in the low score group who answered the item correctly. Call this L;

- calculate the item discrimination (D) as follows:

Item discrimination

$$D = \frac{H - L}{\frac{1}{2}N}$$

Where N = total number of learners from high and low score groups.

The highest value of D is 1 if all the learners in the H group got the items right and none in the L group got it right.

Normally, an item discrimination value of 0.3 or higher shows that the item distinguishes between bright and weak learners.

Example: If 7 out of 10 in the upper group answered correctly and 3 out of 10 answered correctly in the lower group, then D is 7 minus 3, divided by 10 = 0.4.

The above is not that easy especially for a beginner. Worse still, even after much struggle to come up with a good test, you will always find that either the item was not that good or some bitter criticisms will come from those affected by test results (e.g. parents). This further calls for patience, an imaginative mind and lots of practice in item writing.

Conclusion

We have seen that a test writer requires to have:

→ Knowledge of the structure and goals of the curriculum which, in the case of Science, would also include science process skills;

→ Knowledge of the subject matter;

→ Knowledge of the characteristics of the learner;

→ Skills in test construction and correct interpretation of test scores;

→ A creative mind;

→ Patience to sit for long hours and also accept criticisms, etc.

Appendix I

Action Verbs to Use when Writing Behavioural Objectives

For knowledge	•	define	write	underline
		state	recall	select
		list	recognize	reproduce
		name	label	measure
For comprehension	•	identify	illustrate	explain
		justify	represent	judge
		select	name	contrast
		indicate	formulate	classify
For application	•	predict	choose	construct
		select	find	compute
		assess	show	use
		explain	demonstrate	perform
For analysis	•	analyze	select	justify
		identify	separate	resolve
		conclude	compare	break down
		differentiate	contrast	criticize
For synthesis	•	combine	argue	select
		restate	discuss	relate
		summarize	organize	generalize
		derive	conclude	
For evaluation	•	judge	support	avoid
		evaluate	defend	select
		determine	attack	choose
		recognize	criticize	identify

The following are open to a variety of interpretations and therefore are **not recommended:**

to know	to appreciate	to enjoy
to understand	to fully appreciate	to believe
to really understand	to grasp the significance of	to have faith in

from: Kenya Institute of Education, Primary Teacher Education, Draft Teaching Guide for Science, 1985.

Appendix II

Science Process Skills and Attitudes

Skills

- observation and recording
- asking questions
- sorting and classifying
- collecting data
- interpreting data
- making predictions
- drawing conclusions
- reporting and exchanging information
- making hypotheses
- experimenting (controlling variables)
- measuring
- manipulating/handling materials

Attitudes

- curiosity
- self-confidence
- cooperation
- responsibility
- interest
- practical approach to solving problems

from: Kenya Institute of Education, Primary Teacher Education, Draft Teaching Guide for Science, 1985.

Appendix III

Test Construction Guidelines

The following are standard guidelines applicable to the preparation of all assessment instruments.

1. All items of similar format should be grouped together.

2. Arrange items in order of difficulty.

3. Items should be well separated by leaving enough blank space between items for ease of reading.

4. Items should be completed on the same page where they begin.

5. Illustrative material should be placed above the items that refer to them.

6. Items should be randomised.

7. Select a format for answers.

8. Student data should be recorded.

9. Instructions should be reviewed.

10. Proof-read the test.

Guidelines for Constructing Essay Questions

1. Relate each question to an instructional objective.

2. Give adequate time for each item.

3. Indicate level of details required.

4. Use essay items only where objective items cannot be used to evaluate.

5. Allow no options so all candidates should do same items.

6. Evaluate the candidate in terms of his presentation rather than the position he takes in answering questions.

7. Define the tasks clearly and unambiguously.

8. Do not begin essay items with such words as»who«,»when«,»reason«,»evaluate«, etc. as these focus on recall. It is better to start with words like»compare«,»contrast«,»give examples«,»reason«,»evaluate«, etc.

9. You should know the processes you want the student to use in answering the question and select the appropriate verbs.

from: M.B. Ogunniyi, Educational Measurement and Evaluation (Hongkong, Wing Lee Printing Co. Ltd.), 1984.

3.5. Technical Efficiency in Constructing Test Items

Joseph M. Khakame, Kenya National Examinations Council

Introduction

Technical efficiency in construction of test items can be defined as a process of ensuring that a test item is reliable, valid and discriminates appropriately among ability levels of the examinees. This definition is based on the assumption that the item will form part of a test intended for Norm Reference Testing (N.R.T.). It is categorical that the test be for N.R.T. because the purpose for which the scores of such a test are used is basically selection and placement. In the Kenyan case, the Kenya Certificate of Primary Education (KCPE) examination is both terminal for the majority of examinees and for selection and placement of most of the examinees of higher ability.

Kenya has for many years since the early 1970s been striving to ensure that the examinations whose results are used for selection and placement adequately meet these requirements. In addition to these requirements, the examinations are used for certification. These examinations are:

• the Kenya Certificate of Primary Education (KCPE) (Certificate of Primary Education before 1985);

• the Kenya Certificate of Secondary Education (KCSE) (Kenya Certificate of Education before 1988);

• the Kenya Advanced Certificate of Education (KACE) which was phased out in 1989.

This paper will focus on the KCPE examination and the Science paper in particular.

Types of Tests

The tests to be discussed will be of achievement more than of aptitude. It is, however, difficult to distinguish between an achievement and an aptitude test. Aptitude tests are predominantly used to predict the future learning of a candidate. Whereas we categorise the KCPE tests as achievement, the purpose for which they are used make them have considerable resemblance to aptitude test items. Most of the items in these tests are ability-based and, for this reason, the tests have departed from the dichotomy of achievement versus aptitude testing. A follow-up study by the Examinations Council to check and confirm the predictive validity of these tests was carried out. The examinees who scored high on the KCPE Mathematics paper of 1985 performed extremely well on the KCSE Mathematics paper of 1989. This has proved that although the KCPE tests are predominantly achievement tests, they have high predictive validity.

There are many forms of tests which can be used to measure the achievement of examinees who have gone through a prescribed course of study. These are:

→ essay-type (free response)
→ objective type of which there are various types

- multiple-choice
- matching
- true or false
- structured (open-ended).

The essay-type items are used in the testing of English Composition and >Insha< (Kiswahili Composition). These two papers are scored by readers. This is a subjective scoring. The readers' knowledge of content and their moods can easily influence the reliability and validity of the scores. It is also argued that essay-type tests are better suited for higher ability testing. This is debatable but it is also clear that the testing is highly influenced by the candidates' verbal facility. The application of this mode of testing in KCPE therefore suits the purpose of the two papers except for the subjectivity of the readers.

The multiple-choice mode of testing is used in all the other papers for the KCPE examination. These include Mathematics, English Language, Lugha Ya Kiswahili, Home Science, Business Education, Geography, History, Civics, Religious Education, Art and Craft, Music, Science and Agriculture. There are three reasons for choosing this mode of testing at KCPE level. First, it is possible to sample a large part of the content to be tested. Second, its objectivity ensures that the scoring is accurate and in addition the responses of the candidates are least affected by verbal ability, other than the ability to read. Finally, scoring is possible by use of a machine which is faster than people and is not subject to bias or fatigue errors.

Although many people have a notion that multiple-choice type tests are used at elementary levels and the performance of the examinees is greatly influenced by guesswork, the truth of the matter is that this is a fallacy. It has been tested at university level, especially in the United States of America, and proved to be more effective than the essay-type examinations. Multiple-choice items can be used to test all ability levels. These are Knowledge (recall), Comprehension, Application, Analysis, Synthesis and Evaluation. This taxonomy of ability levels by Benjamin Bloom gives a basis for designing a test. It would be futile to design and write a test without a table of specifications in which the ability levels are clearly spelt out.

For each of the contents to be tested, specific weighting in terms of number of items per ability level must be determined. The formula used is not mathematical but takes into consideration the importance of the content to the learners, the amount of time the content is allocated in the curriculum, and the relationship of the particular content to the rest of the content. Below an example of a multiple-choice item strategy for high level testing is provided.

- Give a stimulus in the stem. This can be in the form of facts followed by a hypothesis.

- Four options are given where the examinee is to agree, disagree, show some doubt or doesn't know.
- For each option a set of ten to twenty facts are given where some of the facts are false.
- The examinee is asked to choose the option which best suits the hypothesis based on the appropriate accompanying facts.

The interesting thing about such a test item is that three of the options normally have supporting facts which will require a very high level of ability to be able to discount all the fallacies and finally choose the key from the three options. The fourth option is obvious for the examinees who do not know.

Test Item Analysis

Item analysis is a detailed statistical description of how a particular test item functioned when it was used in a test. The analysis provides information about the difficulty of the item, discrimination among abilities of examinees, the relative attractiveness of the options and deduced reasons for abnormal behaviour of the item.

Pre-test item analysis is a desirable evaluation of the suitability of an item. However, in Kenya the competitiveness of the system and the use of the end results of the tests prohibits its use.

The theory and practice of item pre-testing cannot be overemphasised. Kenya initially carried out pre-tests in the early 1970s, the results of which were used to set standards upon which the current KCPE examinations are based. The reasons why pre-testing is not used in this country are:

- the competitiveness of the education system makes pre-testing unreal;
- it is difficult to retrieve all the items after pre-testing;
- the results of a pre-test cannot be valid and reliable under the current set-up;
- the examinee cannot be motivated to take the pre-test to give valid results;
- there are many publications complete with answers and such pre-tested items can easily form part of the publications;
- the cost of pre-testing under the prevailing circumstances cannot be justified;
- the present method of test item analysis serves a very useful purpose. The results of this analysis, when used in the setting of a similar test, give the desired outcome;
- the impression of pre-testing to the general society would greatly injure the reputation of the Examinations Council.

The purpose for which such a pre-test could be used cannot be imagined and therefore lack of motivation on the part of the examinee would make the pre-test results invalid. The converse of this would be the impossible retrieval of the items from the examinees which would negate the original purpose and therefore the whole exercise would be futile.

Preliminary item analysis is usually performed on some candidates' scripts to check for the following before the actual scoring:

- a wrong key entered by the test writer,
- a wrong key entered in the computer system,

- a printing error that renders the key incorrect,
- an originally correct key made incorrect by the passage of some historical event.

Item Difficulty

The purpose for which a test is designed will dictate the nature of items to be used in the test. It is desirable to have a test where all the items are of low difficulty in an attainment test used to determine how well a group of examinees have learned a set of skills. If, on the other hand, the test is to be used for selection, as it is the case in Kenya, the items on the test must be of varying levels of difficulty. However, it is desirable in this case that a majority of the items should be in the middle difficulty range. The item difficulty is determined by the percentage of the examinees scoring the item correct. Take for example 24,136 examinees; when 12,068 of the examinees get an item correct, this will be 50% difficulty. From 50% to 60% is considered to be middle difficulty, 40% down to zero would be considered to be on the difficulty side. Again referring to the 1991 KCPE Science paper, there were 30 items, 16 of which were between middle difficulty and easy, six were slightly more difficult and eight were very difficult. The item difficulty results are used as a quick check to see which of the items behaved well. A more detailed analysis of performance is carried on from there.

Test analysis is carried out at the scoring stage of the KCPE examination. This analysis serves the following purpose: test for item bias.

It is very clear that Kenyan society has many social differences based on religion, culture and the geographical distribution of the examinees. There are many religious groups which are likely to influence the social set-up of various groups of people. At the test development stages, all items are carefully checked for bias. Any item which does not meet this stringent test is thrown out. However, there used to be one or two out of 100 in the 1970s that passed unnoticed by the experts.

This problem is no longer there. However, during this analysis, patterns of poor teaching emerge and this information is used in the writing of the backwash document normally referred to as the KCPE Newsletter.

Assessing Item Discrimination

Item discrimination is critical in a test if that test is to be used for ranking, selection and placement of examinees. This indicates the relationship between the high ability examinees' response to an item and the response of the low ability group in the same sample. Ideally, the sample should be divided into three groups and a comparison made between the top and bottom groups.

KCPE tests are of adequate length and the inclusion or otherwise of the item that is being tested for discrimination is not significant. The mean score for each of the two groups is least altered by the inclusion or exclusion of the score for the item in question. However, the Kenya National Examinations Council does not use this method of determining Item Difficulty Profile.

If we take a sample of 24,136 examinees, and divide it into three groups according to the ability ranges on the test, this will give us 8,045 candidates per group. It is assumed that the question to be analysed is of middle difficulty; therefore the middle group is expected to remain so. Let us take item No. 24 on the 1991 test in Science and Agriculture.

24. Sankuri classified some of the animals he had seen during a visit to a national park into two groups using a certain characteristic:

Group I	**Group II**
Lizard	Mouse
Frog	Ostrich
Crocodile	Leopard

Which one of the following shows the characteristic that Sankuri used?

Group I	**Group II**
A. Carnivore	Herbivore
B. Lay eggs	Bear their young alive
C. Body temperature varies	Body temperature constant
D. Do not care for their young.	Care for their young.

Sample statistics: N = 24,136 × 14,78 **-** SD = 4.48; Max. Score = 30

Table I

ITEM No. 24	RESPONSES				
	A	B	C*	D	D-INDEX
Candidates & % Choice	1,454 (6.01%)	4,064 (16.83%)	12,519 (51.86%)	5,975 (24.74%)	0.55
Mean Score ($\bar{x}$)	10.39	12.17	16.46	14.22	

*Key

The KNEC method of determining the **discrimination index** is based on the dichotomy of correct and wrong responses made by examinees in the sample. Table I above shows the responses where the key represents correct response while the three distractors represent the wrong responses. Candidates who did not respond to the item (omits) have not been included in the table. To determine the index, the following formula is used:

$$\text{D}-\text{Index} = \frac{\text{Mean Score}\,(\bar{x})\begin{pmatrix}\text{for examinees getting}\\ \text{correct response}\end{pmatrix} - \text{Mean Score}\,(\bar{x})\begin{pmatrix}\text{for examinees getting}\\ \text{the wrong response}\end{pmatrix}}{\text{Standard Deviation (SD)}}$$

Using the results from Table I:

$$\text{D}-\text{Index} = \frac{16.46 - (\bar{x}\text{ of groups A, B, D, and omits})}{4.48} = 0.55$$

This is an item of middle difficulty, and the proportion of examinees scoring correct come from the high ability group ($\bar{x}$ =16.46) and those who were wrong are of average ability and below, that is $\bar{x}$ = 14.22, 12.17 and 10.37 respectively.

Importance of Discrimination Index to an Item Writer

For example, if the mean score for the examinees getting the item correct was 12.00 and the mean for the candidates getting the item wrong was 16.40 from the formula:

$$\frac{12.00 - 16.40}{4.48} = 0.98$$

An item of this kind would indicate that there is something drastically wrong with the question in any of the following ways:

- the high ability candidates ignored the facts and chose to reason, but their reasoning did not have a sound scientific basis;

- the item has a bias which is likely to be fallacious and this obscures the facts which are likely to be very trivial;

- the item is so difficult that most candidates guess but in the process the higher ability candidates try to reason and this distracts them from the key.

An analysis of all items for item discrimination gives a guide to the setters to come up with similar items for the future tests that will:

- have the desired discrimination among candidates by ability levels. This is an essential requirement for a test whose results are intended for selection and placement;

- allow the low ability candidates to score on a few items. This is necessary because each examinee who takes the KCPE examination gets a certificate that shows attainment grades. In the Science and Agriculture paper 1991, there were four Science and eleven Agriculture items respectively that were easy. This gives a total of 15 questions which is 25% of the whole paper.

Critical Analysis of Test Item Discrimination Statistics

When item discrimination is done to a test, it is easy to put the print-out on the shelves and wait for the next year to carry out a similar analysis. However, if the findings of the analysis are critically looked at, very good use of the findings can be discovered.

The subject specialist and the item writers should do this analysis to be able to use the findings fully. Item No. 2 of the 1991 Science and Agriculture paper is analysed in detail.

2. As Kizito was adding kerozene to his lit stove, the whole stove caught fire. The MOST effective way to put out the fire would be

A. covering it with soil
B. beating it with a leafy branch
C. covering it with a piece of cloth
D. pouring water over it.

Table II

ITEM No. 2	RESPONSES				
	A*	B	C	D	**D-INDEX**
Candidates & % Choice	8,984 (37.21%)	1,556 (6.44%)	10,638 (44.06%)	2,874 (11.79%)	-0.02
Mean Score (x)	15.33	13.08	15.18	12.71	

* Key

This question was not discussed in the KCPE Newsletter because it was scored correct by more than 30% of the examinees which was the criterion for the choice of question appearing in the backwash document.

Item No. 2, however, is of interest for item writers because of the distribution of candidates choosing the key and those choosing a popular distractor.

First, the distractor C was chosen by 44.06% of examinees of above average ability, whereas the key A was chosen by 37.21% of examinees of above average ability. All other options were chosen by candidates who were of below average ability. It is apparently clear that this item is difficult. The two options A and C were the most plausible choices and since the item asked for the MOST effective way, both options can be effective depending on the circumstances. In some life situations, soil is hard to come by e.g. a candidate from an urban setting may not be able to gather 1 kg of soil in one hour by which time the fire would be completely out of control. If the same examinee under the urban conditions was quick to think, a wet cloth would have been a solution, but the cloth in question was not indicated to be either wet or dry. An examinee could make that decision that the cloth is wet, therefore it can be used to put out the fire quickly covering the fire so that the supply of oxygen is cut off.

The item writers and the subject specialists should imagine they were the examinees and what they could do in a real life situation.

Most of the items on the Science paper were beyond simple recall and in fact even those which may have appeared to be recall items contained information that required high level ability skills.

Relative Attractiveness of Choices

When an item writer drafts an item with four choices, it is hoped that those examinees who know the correct answer will choose the key and the remaining examinees will equally opt for the three distractors. But, unfortunately, this is to a lesser extent the case. The analysis of the 1991 KCPE Science paper revealed that:

• out of the 30 items, 10 had one very plausible distractor which made the other two distractors implausible;

• in cases where many examinees scored correct, for example items No. 11, 19 and 20, the remaining examinees were attracted by one distractor.

Consideration of the ability ranges of candidates opting for the strong distractor shows that the item was based on misconceptions and fallacies, that is if such an ability is below average. Table III shows a summary of the 10 items.

Table III Summary of 1991 Science Test Items (Selection)

ITEM No.	% Scoring Correct	% Choosing Main Distractor	Abilities
2	37.21	44.06	Low
6	10.90	52.80	Above average
8	37.18	34.02	Low
11	45.52	29.08	Mixed abilities
18	18.61	47.13	Mixed abilities
19	66.16	26.06	Low
20	68.71	23.84	Low
27	15.99	51.26	Mixed abilities
28	10.70	65.89	Mixed abilities
30	34.81	55.10	Low

The strong distractors should be carefully analysed so that similar distractors are not inadvertently used in future on similar items. Strong distractors where the majority of the examinees have low ability can be ignored.

All this data is available to the six setters of the paper. It is up to the setters to study these findings so that when they write items, they follow the set standards and only use the responses in the past paper as a guide. It is logical and reasonable to assume that a response distractor which attracted many examinees in the 1991 KCPE examination of above average ability must be either biased or the question was ambiguous. These types of responses are critically analysed and the conclusions are used as a guide in generating responses to the new items for a future examination.

In conclusion, the reason for avoiding to discuss or even mention reliability and validity statistics here is that these two features are derived from the mean, standard deviation and correlation relationships of a sample. They are the factors which are used in test item analysis whose results therefore fulfil the requirements of validity and reliability. The Examinations Council has over the years developed a system where item writers are trained before they can be used in the actual process of examination item writing. The current system of test item analysis is not fully developed.

There is still room for increasing the statistical features in the test item analysis, and the processes involved in test item analysis may be added to the training of the item writers in order to produce better test items in future.

4. APPENDICES

Int. J. Educational Development, **Vol. 10. No. 1. pp. 69-82. 1990**
Printed in Great Britain

0738-0593/90 $3.00+.00
Pergamon Press plc

4.1. Examinations Policies to Strengthen Primary Schooling in African Countries

THOMAS OWEN EISEMON

Centre for Cognitive and Ethnographic Studies, McGill University

Abstract - Examinations can be a powerful instrument for influencing the kind of instruction students receive, what they learn at school and how they will use school knowledge and skills in daily life. Attention is given to the examinations administered to African primary school students which are the basis for selection for secondary education. Findings are drawn from recent studies in two East African countries, Burundi and Kenya. These studies suggest: (1) that the scope of the school leaving examinations should be increased and should emphasize assessment of knowledge in the domains of science, modern agriculture, health science and nutrition; (2) greater use should be made of vernacular languages for testing to encourage explanatory instruction especially in scientific subjects; and (3) examination items should be constructed to measure high level cognitive skills of importance for performing practical tasks involving applications of modern scientific knowledge.

INTRODUCTION

This paper examines the use of school leaving examinations for strengthening the internal and external efficiency of primary education in African countries. It will focus on examinations policies in three key domains, those relating to: (1) the scope of examinations; (2) the language of testing; and (3) the construction of test items. It will suggest how manipulation of examinations policies may influence the kind of instruction students receive, and what they learn and may retain from schooling. Examinations can be a powerful and positive instrument of educational policy if their impact on instruction and learning is better understood. That is the purpose of the paper. Interest in using examinations for improving primary schooling in African countries has increased in recent years for many reasons; chief among them the recognition that examinations reform is a relatively low cost, effective strategy for stimulating educational change (Heyneman, 1986, 1987).

In contrast to primary schools in western countries with well developed systems of secondary education where the first years of schooling are considered crucial and are the object of much attention, schools in many parts of Africa tend to allocate scarce instructional resources to the upper stage of primary schooling which prepares students for highly selective secondary school entrance examinations. Better trained, more experienced teachers are often assigned to teach the final years. Students in the upper stage of primary schooling may receive more hours of instruction and are more likely to study from textbooks which are either distributed to them or which their parents purchase. Consequently, manipulation of examinations policies may not change the present allocation or perhaps more accurately, the misallocation of instructional resources. The intention of examination reform is, instead, to change the way these resources are used resulting in subtle changes in teaching and in the cognitive outcomes of primary schooling.

Educational researchers and policy makers in Africa and elsewhere have been ambivalent in their thinking about national examinations. Examinations are often viewed as the cause of poor quality primary schooling as well as the source of urban/rural, regional, gender and other disparities. This is contested by advocates of examination reform who have shown that well managed systems with the research capacity needed to design and assess test instruments can not only produce examinations that avoid the usual biases but also provide feedback to schools to improve student achievement (Somerset, 1983, 1987; Savage, 1985). The Kenya National Examinations Council has been described as an exemplar of such a system (Somerset, 1983; Eshiwani, 1986).

THE USE OF EXAMINATIONS FOR EDUCATIONAL IMPROVEMENT

National examinations have a long history in developing countries with a colonial experience that is important to review. India was the first to experiment with examinations as a strategy for improving the quality of post-secondary education. These were not the national examinations we know today but external examinations set by universities established for the purpose of accreditation and examination which did not offer instruction. The three original Indian universities at Bombay, Calcutta and Madras founded in the late 1850s along the lines of the University of London had this function. Their purpose was to give uniformity to the first degree programs of affiliated colleges, increase standards and restrain the growth of higher education. By the 1880s, it was acknowledged that the affiliating/examining model had failed in all of these respects (Ashby, 1966). Lord Curzon's efforts at the beginning of this century to reform Indian higher education by strengthening the affiliating and examining functions of the universities that by then had become centres of sedition did not have greater success (Basu, 1974). Irregularities in affiliation and examination, the result of pressures from caste, communal and linguistic groups for expanded access to higher education, plague the Indian university system to the present day (Altbach, 1972; Eisemon, 1982). The lesson that Britain drew from this experience, and France from a somewhat similar one in Vietnam, was that educational expansion had to be controlled from the outset; controls could not be successfully imposed at a later time.

The lesson was applied in Africa where formal education for the indigenous population developed in a presumably more logical, more planned way, i.e. from the bottom up under the close scrutiny of colonial authorities. Use of external examinations set and marked in the metropolitan countries and administered to African students desiring higher education either abroad or at the collegiate institutions established in Africa after the Second World War effectively controlled access to further education and ensured success of initial efforts to implant metropolitan standards. Newly created institutions of higher education were also affiliated to metropolitan universities that, for a time, awarded degrees to students who undertook their undergraduate training in Africa. During the period of decolonization and the first years of independence, the external examinations required for university studies were partially localized. This was done by either adapting overseas examination papers for administration in Africa and increasing African participation in marking papers, or in the case of British West Africa, by establishing a regional examinations council to set and administer examinations that followed the metropolitan model of how external examinations should be conducted.

It is remarkable, in retrospect, how well these systems of external examination worked: so well that they were retained many years after independence. Overseas examinations for university entry are still taken by a large number of African students usually attending prestigious private secondary schools who hope to do further studies abroad. In many African countries, the overseas examinations continue to set the standards for measurement of achievement in academic subjects and for good examination practice, generally.

The creation of national systems of primary and secondary education and eventually higher education after independence led to the establishment of national systems of examination in many African countries or to mixtures of national and local examinations systems in the larger countries like Nigeria. There is great diversity in the ways these have been established. Perhaps the most typical model is an examination unit located in a national or state ministry of education, though many like the Kenya National Examinations Council have autonomous status. There is even greater diversity in the scope of the functions of these units. In Kenya, the Council is responsible for almost all examinations including those administered at teacher training colleges and most pre-university professional and technical examinations as well. That is atypical.

What is common is that few examinations units have the capacity to do more than set, administer and mark examinations, and announce results. They function for the purpose of allocating educational opportunities and in this respect, most are unlike their predecessors in the colonial period which had a broader mandate to strengthen the quality of instruction. The responsibilities of African examinations bodies are, however, much more complex. There are more levels and subjects of instruction to be examined, more students taking examinations, greater political pressures on the autonomy essential to the examination process and few resources needed to innovate on existing practices. The implication of this is, simply, that examination reforms at the primary or other levels of the educational system will be difficult and expensive to introduce, and harder to institutionalize than the examinations focused strategies of qualitative improvement characteristic of the colonial period. But the centrality of examinations to instruction and learning merits attention to examinations policies and to strengthening the capacity of examinations units as an element of any package of qualitative improvements which may also include better facilities, more textbooks, support for more frequent school inspection, in-service teacher training, and so on.

CURRICULAR INNOVATIONS AND THEIR IMPLICATIONS FOR TESTING

Major investments have been made by the World Bank and other donors and by African governments in developing capacities to prepare, evaluate, publish, distribute and to train primary school teachers in the use of instructional materials. Interest in textbooks has been accelerated by the findings of international studies of educational achievement which have stressed the contribution of textbooks and other qualitative inputs to student learning in developing countries (Heyneman and Loxley, 1983; Heyneman *et al.,* 1981). A great deal has been accomplished in this regard, more than is generally recognized. Twenty years ago, most of the textbooks used at the primary level were either imported from metropolitan countries or, in the case of vernacular language primers, published locally by religious groups. Today, many African countries have textbook publishing industries of varying scale, and a cadre of trained textbook writers and illustrators. Larger countries like Kenya and Nigeria have significant private sector involvement in textbook development and publishing, though ownership, management and technical support is more often foreign than indigenous (Eisemon *et al.,* 1986).

This capacity has enabled African countries to make substantial efforts to adapt and to expand the content of primary schooling. What that implies differs from country to country. There are, nevertheless, three general trends. The first relates to the increasing importance that has been given to the teaching of vernacular languages. Here, again, there is much variation. In Tanzania and Rwanda, vernacular languages are used for instruction throughout the primary cycle in most rural schools. In Burundi, the local language is used in the lower stage of the primary cycle and a transition is made to the metropolitan language in the final years. In Kenya, local languages and/or Kiswahili or English may be used in the lower stage while English has been retained for the upper stage. In most countries, the teaching of vernacular languages has been assigned a central place in the primary school curricula and in the rhetoric of educational reform. However, metropolitan languages continue to be used for upper primary and secondary schooling in many African countries.

The second concerns the teaching of practical subjects such as health, nutrition, home economics, agriculture and pre-vocational skills. These subjects were also emphasized in primary schools in the colonial period (see, for example, Bude, 1985; Foster, 1965). Their revival as a strategy for fostering rural development has been prompted in part by recognition that the possibilities for expansion of secondary education and formal employment are limited. Most students who attend primary school will return to their families and whatever knowledge and skills they have acquired will be put to use in a rural environment, either in agriculture or in some form of employment they will create for themselves. The primary school curricula has been enlarged in consequence. In Kenya, for instance, twelve subjects are taught in the final year of primary school!

The third tendency has been to encourage what was described in the 1960s as discovery or inquiry oriented instruction, or what is still known in some parts of East Africa as the ‘new approach’ to primary school teaching (Eisemon *et al.,* 1986). In the late 1960s, the United

States Agency for International Development (USAID), UNESCO, the Nuffield Foundation, the British Council and other donors initiated curriculum development programs in Africa which were mainly aimed at the improvement of primary and secondary school teaching of science and mathematics (Yoyole, 1985). These employed, what were then, the lastest theories of instructional innovation in Western countries emphasizing development of high level cognitive skills.

Each of these trends poses a major challenge to established examination policies and practices; which subjects should be examined to ensure coverage of the mandated curricula, how should practical knowledge and skills be measured, in what language should testing be carried out, and how can examinations be developed to assess students' conceptual understanding of subject-matter as opposed to mere recall of disparate facts on which they have been drilled?

Testing to increase coverage of the school curricula

Achievement tests have the dual purpose of measuring what students have learned to ascertain whether certain minimal levels of performance are obtained, and selecting some students for further education. These objectives are not necessarily incompatible. But often if there are few opportunities for further education to be allocated, selection guides the construction of examination papers and test items. If domains of content are left off such tests, they are likely to be neglected in instruction. A test with good predictive validity, but poor curriculum or instructional validity may select good students for secondary school, but undermine the educational objectives which are intended to benefit students who are not continuing their formal education beyond primary school. The concepts of curriculum validity and instructional validity put the burden of proof on the examining authority to show that there is a reasonable relationship between examination content, the intended curriculum, and what is actually taught.

We have studied the impact of examination design on curriculum coverage at the primary level in Burundi and Kenya (Eisemon, 1988; Eisemon *et al.,* 1989a, b). Both countries have highly selective systems of secondary education, entrance to which is dependent on student performance in a rigorous examination administered at the end of the primary cycle. In Kenya, about a third of the students taking the Kenya Certificate of Primary Education Examination go on to some form of secondary education. In Burundi, less than 10% do so. Compared to Burundi, primary school instruction in Kenya is poorly monitored to ensure implementation of the curricula. Many rural schools are seldom inspected. Moreover, there are wide variations in the factors that influence coverage of the school curricula like trained teachers, textbooks, classrooms and instructional space for teaching many subjects, but especially compulsory practical subjects. In Burundi, there is much less variability among primary schools and instruction is closely supervised. For instance, school directors are required to make one hundred and fifty classroom visits during the school year and file reports with school inspectors.

Students taking the *concours national* in Burundi are examined in only four academic subjects and student marks are weighted in favour of tests of French reading comprehension and grammar. The examination is designed mainly from the perspective of selection for secondary education. Not surprisingly, we have found that the instruction given in the upper stage of the primary cycle often deviates from the curricula despite, or perhaps because of, close teacher supervision. Teachers frequently skip lessons in compulsory subjects like agriculture and home science that are not examined (Eisemon *et al.,* 1989a).

Kenya's Certificate of Primary Education examination has been designed to measure student achievement in all subjects in the school curricula, and the various papers are weighted equally in calculating final marks. The introduction of the 8 + 4 + 4 system in 1985 lengthened the primary cycle by an additional year. Its most important feature, though, was the emphasis on Kiswahili and practical subjects. Although the government produced a revised syllabus and new textbooks, very little was new in these curricular reforms except the emphasis on pre-vocational training. The major innovation was that what was supposed to have been taught for many years was to be examined. The Kenya National Examinations Council was given the task of setting new papers for health (previously taught and examined as integrated science which is to say that little importance was given to it), Kiswahili (not examined, and therefore, often not taught in the upper stage of primary schooling), agriculture (hitherto a small part of the science syllabus), and other subjects like art and crafts (on the basis of project work). These subjects were made compulsory papers. The changes were widely criticized in the public press and resisted by many educators (Eisemon, 1988). Implementation created many practical problems; facilities had to be constructed, texts produced, classrooms equipped and teachers trained for the new syllabus. Nevertheless, the effect was dramatic. Syllabus coverage, our studies indicate, was increased in spite of a great many difficulties in both urban and rural schools (Eisemon, *et al.,* 1986; Eisemon, 1988).

A strong and consistent, if not particularly insightful, finding of most research on effective schooling is that differences in the scope and amount of instruction received produce large variations in student performance. Typically, reducing such variation and raising achievement levels is seen as a school management problem to be remedied by closer teacher supervision, more frequent school inspection and by measures that will ensure a more equitable distribution of instructional resources like textbooks. The impact of examinations policies on students' opportunities to learn what primary schools are supposed to teach is less well recognized.

Coverage of the school curricula is a serious problem in primary schools in many African countries. While the scope of examinations can be increased to foster greater coverage, there is often not enough time or instructional resources to cover the subjects that ministries of education have prescribed, or to teach them in the innovative ways that curriculum developers expect (Eisemon *et al.,* 1989a). Ministries have various policy devices to deal with the problem; for example, revision of the scope of the school curriculum to bring intentions closer to the realities of implementation. Unrealistic expectations are in part responsible for low levels of test performance. In Burundi, for example, average scores for recent mathematics and French comprehension and grammar papers in the *concours national* are only slightly above the chance level. A closer relationship between examining authorities and those responsible for curriculum development and teacher supervision is required.

Testing practical knowledge and skills

Some of the most influential instruction that takes place in primary schools in terms of the ways school leavers think about and perform tasks in daily lives, is given in subjects that are often not examined or are poorly covered in secondary school entrance examinations; for instance, health, nutrition, home economics, principles of modern agriculture and science, especially biology. Testing in academic subjects like language arts and mathematics is also seldom designed to assess skills and knowledge of practical importance.

Information processing skills are important to a wide range of practical activities; for example, comprehending instructions on how to do some practical task such as administering medicines or applying fertilizers. The ability to encode, decode, recall and make text based inferences is not sufficient for comprehension. Readers must make inferences from their prior knowledge and experience in understanding these texts. Comprehension of such texts is one of the mechanisms through which schooling facilitates adoption of modern health and agricultural practices based on interventions derived from modern science.

Processing procedural information requires performing complex cognitive tasks which make literacy functional. Procedural texts have many features that do not enhance comprehension. Typically, they are brief texts with a high density of information expressed in many conditional statements (Eisemon *et al.,* 1987; Eisemon, 1989b). Crucial information is seldom marked with text cues aside from those setting apart different kinds of information. The structure of this genre of printed information is highly varied. There are relatively few conventions to which discourse must conform that might facilitate information processing. Although their purpose is instructional, these texts often assume familiarity with the subject and some related expertise. In many African countries, procedural texts require comprehension of information presented in two or more languages for correct inferences (Eisemon and Nyamete, 1990).

The mathematical problem solving tasks imbedded in procedural texts such as calculating the amount of a product that must be purchased or how much of it is to be administered are difficult to perform with the information provided. Units of measure are frequently unfamiliar and necessitate conversion. For this reason, adults rarely perform calculations in everyday life compared to how often they estimate solutions to practical problems. Abilities in estimation, of course, have a relationship to skills in calculating correct answers. But these skills are not necessarily a proxy for each other (Eisemon, 1989b; Eisemon *et al.,* 1989a).

Schooling affords students little exposure to text genres and numeracy tasks they will be exposed to as adults and, in consequence, little opportunity to develop the necessary skills (Eisemon, 1989b). Moreover, conventions of testing poorly simulate naturalistic tasks. Reading comprehension tests usually present students with narrative or descriptive texts and a set of tasks that involve recalling or inferring information from the texts as if comprehension does not involve using prior knowledge. Most comprehension tasks do not require integrating information presented in more than one stimulus text and testing of literacy and numeracy skills is done independently. Mathematics instruction and methods of examining achievement emphasize correct answers, penalize students for good ‘guessing’ through marking practices and powerful distractors, and make extensive use of narrative texts for constructing problem solving tasks (‘story problems’).

Elsewhere (Eisemon, 1988, 1989b; Eisemon *et al.,* 1989a, b) we have described alternative and more naturalistic approaches to assessing literacy and numeracy skills in primary school students. Stimulus texts were designed to incorporate many features of procedural texts and comprehension and numeracy tasks constructed to elicit prior knowledge acquired from instruction in science and other subjects. Similar texts and tasks were used to measure adult literacy and relate it to important outcomes of schooling. Among Burundian and Kenyan farmers, for example, functional literacy scores had a larger effect on farm ouput than years of schooling and most other indicators of cultivators’ skills and production characteristics, including expenditures on fertilizers and other modern production technologies (Eisemon, 1989a). While there is much scope for testing practical skills in academic domains, many complex issues are raised. These have to do with techniques of measurement, assumptions about how functional knowledge and skills should be assessed and, ultimately, about the way language arts and mathematics are taught.

In many African countries, there are strong pressures to vocationalize basic education, resulting in programs to prepare students for self-employment. In contrast to technical training which has as its primary objective the development of productive skills leading to levels of measurable expertise, the aims of pre-vocational instruction are more modest and more ambiguous. Most pre-vocational instruction has two foci; the development of skills that may be useful in a wide range of production situations as well as those which are associated with particular kinds of work whose mastery is in some sense a prerequisite for subsequent technical education, formal or informal. Because such instruction occurs in the context of basic education and employs methods drawn from the teaching of academic subjects, pre-vocational education has the additional purpose of providing experiences to facilitate the transfer of cognitive skills from academic to practical domains.

Measuring outcomes of pre-vocational education is complicated by many factors, not least is the difficulty in deciding what production knowledge and skills should be tested, and how this should be done. In academic subjects, knowledge and skills are hierarchical and cumulative, at least from the standpoint of curriculum and measurement specialists. And there are widely accepted methods for assessing task performance. However, there is little to guide testing of outsomes of pre-vocational education.

Improving testing of outcomes of pre-vocational education requires understanding: (1) the knowledge and skills important to productive activities and their relationship to schooling; (2) key production tasks associated with these activities; (3) what constitutes competent task performance; and (4) how expertise is acquired. In brief, it necessary to look outside school to develop strategies for assessing the effectiveness of practice studies.

In Burundi and Kenya, agriculture and crafts are the principal subjects of pre-vocational education. We have studied how primary school children are taught these subjects as well as how production knowledge and skills are used in everyday life (Eisemon *et al.,* 1989b; Eisemon, 1989b). School instruction in agriculture and crafts share certain characteristics. Typically, production knowledge and skills are imparted by individuals without training, experience or much interest in the domain of instruction. Thus, students have few opportunities to observe expertise. Practical work is emphasized but little importance is given to competent task performance. Progression from one topic of instruction to another is not based on demonstrations of task mastery. While topics may be ordered in the syllabi according to some taxonomy of complexity, there is often a great deal of redundancy indicating that the skills may not be hierarchical.

Outside school, children acquire agricultural and craft skills in very different ways. Children observe adults engaged in productive activities from a very early age and through this, encode important information about production processes. They acquire production skills through experimentation usually imitating adults. Learning of production tasks is spontaneous and often undirected. Children, having become proficient in one task, learn another gradually expanding their repertoire of skills. Learning agricultural and craft skills always involves working with objects of value to produce things of value.

In so far as craft skills are concerned, our studies suggest useful strategies for measuring skills but also indicate that those implicated in expert performance are unlikely to be learned in school. The Kenya Certificate of Primary Education examination presently tests outcomes of craft instruction by requiring students to produce craft objects for assessment. A better method, that is more consistent with the aims of pre-vocational education, would be to test student performance of tasks fundamental to expertise (Eisemon *et al.,* 1988). Efficiency, for example, is fundamental to expertise in many craft occupations like soapstone carving, an important form of self-employment in western Kenya. Assessment tasks can be constructed to measure students' efficiency in selecting stones for carving or in the choice of tools and subject matter. But such expertise is unlikely to be developed through formal instruction. Soapstone carving is probably like many other craft occupations such as carpentry and tailoring in these respects. Assessment of student products may provide few insights into the skills students have acquired that are involved in expertise or can be generalized to other practical domains. Improving present assessment practices engages the issue of whether these skills are best taught in school.

While many primary school students who are being taught crafts are novices, they begin instruction in agriculture with much production knowledge and skills. In fact, agriculture is not a pre-vocational subject for most students in rural areas. It is their present and future vocation.

Literacy and numeracy are one mechanism through which schooling seems to influence agricultural productivity. These skills affect capacities to effectively use modern agricultural inputs. Also involved is a knowledge of the scientific principles which underlie modern agricultural practices. Schooling affects the way farmers think about and practice agriculture (Eisemon, 1989a). Testing outcomes of agricultural instruction should emphasize how well students are able to apply the scientific knowledge they have acquired to practical production problems.

While variability is characteristic of most production situations, there are many production problems that exist across a wide range of situations - low soil fertility, poor drainage, crop infestation, and so on - and practices that are effective in dealing with them derived from modern as well as indigenous scientific knowledge. Farming expertise involves an ability to identify these problems, deduce their causes and select appropriate intervention strategies. Schooling should impart 'theories' and information that guide practical problem solving, especially involving the use of modern agricultural technologies. The effective use of hybrid varieties to increase yields is illustrative. This requires some knowledge of genetics and soil chemistry, however rudimentary.

The scientific principles of modern agriculture may be taught, or students expected to integrate what they have learned in science and agricultural classes (Eisemon, 1989a). In

Kenya, agricultural teaching at the primary level incorporates biology and other sciences and until recently, students were examined on the knowledge of principles of agriculture rather than their practical skills in, say, crop care. In Burundi, agriculture is divorced from instruction in science and it is not a paper in the national examination administered at the end of primary school. In order to investigate the effectiveness of agricultural instruction in Burundi, we have developed tests similar to the ones formerly used by the Kenya National Examinations Council to measure achievement in agriculture which assess problem solving skills using modern scientific knowledge (Eisemon *et al.,* 1989b). However, they are different in two respects. First, we have attempted to measure students' abilities to solve some practical production problems with indigenous knowledge and practices. Agricultural education in Burundi and most African countries condemns indigenous farming knowledge and practices by neglect, though such knowledge and practices like intercropping, particular patterns of crop rotation, crop fumigation and use of indigenous varieties are demonstrably effective in many production situations and some times superior to modern production technologies. Second, because agricultural education in Burundi, Kenya and other countries is offered in a metropolitan language, as is most science education, we have tested students in their mother tongue to better assess what they have learned in both subjects, and whether they have integrated this knowledge into their thinking. In sum, testing outcomes of pre-vocational instruction necessitates careful specification of what kind of impact schooling might have on domains of performance, taking into account the production knowledge and skills which children possess, and designing measurement strategies that capture crucial features of expertise.

Testing in the mother tongue to improve measurement of achievement

Language policies in many African countries where basic education is the responsibility of the national government, prescribe the use of a metropolitan language for instruction in the upper stage of the primary cycle and for examination in most academic subjects. This is seen as having several practical advantages, one of which is that in linguistically heterogeneous situations, learning and being examined in a metropolitan language is perceived to favour no particular linguistic group. In linguistically homogeneous situations like Burundi where French is the medium of most instruction in the final years of primary schooling and is used for most papers in the *concours national,* other justifications are offered that, essentially, favour the preparation of an elite for higher education *vis-à-vis* the competing needs of those who are unlikely to use French in later life. Examination policies, thus, determine language of instruction policies at the primary level just as much as they reflect those adopted for secondary and higher education.

Poor proficiency in the language of instruction is an impediment to acquiring knowledge and skills and, thus, depresses levels of performance, though not necessarily to the same extent. In other words, students with little grasp of the language of assessment may 'know' more than their test results reveal. There is much evidence of that in African studies comparing the performance of students in the mother tongue and in a metropolitan language (Zepp, 1982; Eisemon *et al.,* 1989b). Nevertheless, what performance differences reveal about how testing in a metropolitan language affects the measurement of student ability is not well understood.

In Burundi, we compared the performance of students in French which is used for the final two years of primary schooling and for the *concours national* as well as in Kirundi, the mother tongue of most students in that country (Eisemon *et al.,* 1989b). Tests were developed measuring reading comprehension skills and problem solving skills in the domains of science, agriculture and mathematics. As expected, students who received the tests in Kirundi scored higher on most tests than those who took them in French, although performance levels were low for all tests. The performance differences were largest for the tests of achievement in science and agriculture. In mathematics, however, students scored slightly higher in French.

Responses to question items were examined using monotone regression splines analysis to determine how language of assessment affects the performance of students of different ability (Ramsay and Abrahamowicz, 1989). In this analysis, ability was estimated from the student's response pattern for each test, and the estimate compared to the student's response to individual questions. In the reading comprehension and science and agriculture tests, the performance of the most able students was most affected by being tested in French. Conversely, testing in the mother tongue did not increase the performance of students with less ability. These findings have at least two implications. First, students with poor proficiency in the metropolitan language learn so little that their achievement levels are almost unmeasurable. Greater attention needs to be given to raising the proficiency of these students in the metropolitan language. Second, mother tongue testing better estimates the knowledge and skills for those students who, presumably, are the most proficient in the second language. It may be useful for better identifying the most talented students for further education.

In mathematics, the French and Kirundi tests performed similarly in discriminating students. Since most of the test items were story problems, the similarity can not be explained simply in terms of the fact that the items required little language comprehension for correct solution. Most required complex representations of information for problem solving. The similarity in test results may be attributable to the use of the mother tongue for instruction in mathematics in the lower stage of the primary cycle which facilitates learning, especially for students with poor proficiency in French. In learning science in French or in understanding French scientific texts of the kind that were used to measure reading comprehension, students' difficulties may be compounded by lack of mother tongue scientific vocabulary and concepts. The lack of transfer of knowledge and skills from the metropolitan language to the mother tongue of African students is often noted (e.g. Berry, 1985). The importance of the development of the mother tongue for learning science in the metropolitan language is not given much attention in this connection.

These findings lead us to question the use of metropolitan languages for instruction and assessment in subjects like science, health and agriculture which have great practical importance for the majority of primary school leavers who do not continue their studies. There are several reasons why serious consideration should be given to expanding the scope of vernacular language assessment beyond the usual language arts papers, even if this is not accompanied by radical changes in the use of metropolitan languages for instruction. For one thing, it may provide a more accurate representation of the knowledge and skills primary school students have acquired and a better indication of the quality of education they have received. In addition, use of vernacular language questions to measure achievement in science, agriculture, health and nutrition may encourage more explanatory instruction. That, at least, might motivate many teachers to ensure that what is taught in a metropolitan language is really understood. It might also facilitate development of the student's mother tongue as a language of scientific discourse and, in doing so, increase capacities to use science in daily life. Indigenous languages will not develop as languages of scientific discourse unless they are used for instruction in science and practical subjects.

Testing to foster better teaching

Cramming is usually deplored in discussions of the 'backwash' effects of achievement testing. Still, it is necessary to distinguish between good and bad examination cramming. Bad cramming has three characteristics: (1) it involves drilling and accords little importance to learning activities requiring self-study skills; (2) it is focused on increasing student's exposure to possible examination items and correct answers and not on developing basic knowledge and skills, and (3) it results in distortion of the program of instruction in order to make time for extensive review.

Bad cramming may be an important though unintended outcome of the way examinations are constructed and administered. For instance, test items constructed to measure recall of textual information promote teacher reliance on choral recitation as an instructional strategy. Similarly, a highly randomized process of selecting examination items, though it may encourage teachers to cover the subject syllabi, also encourages unfocused examination preparation. Conversely, highly predictable examination items provide incentives for teachers to skip some lesson topics in order to increase time for review of other more important topics. Avoiding these extremes requires an understanding of teacher examination preparation strategies; i.e. how they decide what is likely to be examined, their beliefs about what guides the construction and selection of examination items and the methods they employ to coach students.

In Kenya, a great deal of information is made available to teachers about the content of the school leaving examinations. The Kenya National Examinations Council publishes sample papers, newsletters to teachers and, of course, many teachers are selected to mark the examination scripts under the Council's strict supervision. There is, in addition, an important indigenous cottage industry in the production of examination guides containing samples of questions used in previous examinations. The guides are purchased by parents and by teachers. Teachers, we have found, make extensive use of such guides in preparing students for the KCPE examination largely because they are suitable for class drills and written exercises (Eisemon *et al.,* 1988). The expanding sales and number of new editions of these guides provides some indication of the confidence that parents, students and teachers place in them.

Teachers select the questions that are most likely to be asked and drill students on the correct answers (Eisemon, 1988). Teachers 'work backward' from their knowledge of examination questions in constructing regular lessons, highlighting topics that are the most often examined and, again, drilling students on the correct answers. Teachers often do not vary either the form or the content of previous examination questions in their drills. They are presented *verbatim.* That may be the result of a poor understanding of how the examination items are constructed, i.e. of the knowledge and skills they are supposed to measure. Students do not, it seems, need to know *how* to answer the questions but rather *what* to answer. This may also reflect the need to cover as many examination items as possible. The students' exercise books into which these items are transcribed have the characteristics of examination guides; they are simply lists of questions and answers.

Examination preparation does not involve explanation of principles and concepts which students can use to organize knowledge that test items may be intended to elicit. It is not that teachers assume that important principles and concepts are understood from previous instruction. There is very little explanation given by teachers under other circumstances. Classroom discourse in academic subjects is characterized by vocabulary building, by introduction of new and unfamiliar terms in a language that is neither the student's nor the teacher's mother tongue. For this reason, teachers favour listing and fill in the missing word exercises in regular classes, and drilling the correct answers when coaching students. Such strategies are far from optimal in terms of student understanding. They persist since they are rooted in a complex of factors such as insufficient teacher understanding of subject matter, insufficient assistance from principals and others (inspectors, Ministry of Education staff development personnel), lack of textbooks and other instructional materials, lack of instructional time, pressures for examination success as well as the content and construction of examinations.

In Burundi we have investigated how teachers prepare primary school students for examinations, and the impact of teacher strategies and skills on student performance (Eisemon *et al.,* 1989b). Examination preparation practices involve; (1) increasing the amount of instruction students receive; (2) review of essential content; (3) frequent testing to identify performance deficits and build test taking skills; and (4) diagnosis of sources of student errors and selection of appropriate instructional methods to remediate them.

Teachers used various strategies to increase instruction prior to the administration of the *concours national* examination; lengthening the school day, substituting lessons and combining morning and afternoon shifts. Only a few teachers however, increased the length of the school day in the period prior to the examination. In most cases, this could not be easily done because many teachers and students resided at considerable distance from the schools. In some schools, the school week was lengthened by adding Saturday afternoon classes. As noted above. many teachers used class periods allocated for teaching pre-vocational subjects to teach academic subjects. These practices did not have much direct or indirect impact on student performance because the amount of additional instruction provided was insignificant compared to the effects of combining shifts. The number of times classes were combined was strongly related to student performance particularly for subjects like mathematics.

The impact of review strategies on student performance was difficult to assess. Creating more time for review of the syllabi may or may not be an effective examination preparation strategy, depending on the coverage of examination items, the predictability of item selection, the way the subject syllabi are constructed, and other factors. Teachers with a history of success in preparing their students for the *concours national* examination varied greatly in the amount of time they spent in lesson review. Some strictly adhered to the instructional timetable which allows only about three weeks for review. Others accelerated coverage of lesson topics in order to begin reviewing before the start of the third trimester when the examination is given.

What teachers review and how they review is, of course, more important than when they begin reviewing for examinations. The point is that successful teachers were not effective merely because they did more cramming. Nor, surprisingly, was student performance correlated with taking frequent mock examinations. In Burundi, these are set and administered at the cantonal rather than at the school directorship, school or classroom level. Moreover, the examining authorities do not produce sample papers or newsletters to guide teachers in preparing students as the authorities do in Kenya. Nevertheless, teachers do design examination-like learning tasks especially for review lessons. In some lessons we observed, these were simply correct answer drills. The teachers assumed that student examination success was dependent on their ability to recall correct answers to questions that might be formulated in many ways. An analysis of recent *concours national* examination papers suggested that this assumption was not entirely unfounded.

The most effective teachers, though, were those with the most insight into examination tasks and student performance. We presented teachers with sample examination questions and student responses. We asked them what students needed to know to correctly answer the questions, why they made certain errors and what could be done to better prepare the students. Teachers' responses were rated. Teacher ratings exhibited a high degree of variability both within the group studied as well as across the subjects of examination items. A few teachers scored highly on all measures, and a few very poorly. Teacher ratings for specific subject domains were correlated with student test scores and *concours national* results for science, mathematics and reading comprehension. The effect of teacher skills was stronger when opportunity to learn and school management factors were taken into account. What these findings suggest is that effective teaching is enhanced by teacher understanding of examinations that might be developed through in-service training. Another implication is that examining authorities should provide more guidance to teachers as to how they should prepare students for examinations.

Improving examination questions

Examinations should be viewed as determinants of the teaching students receive; as inputs, not just terminal outcomes of schooling. They influence how teachers select and organize knowledge for instruction. They also affect the learning tasks teachers construct from which students acquire and practice skills.

The expansion of primary schooling has favoured increasing reliance on the multiple choice format for examinations in many African countries. Multiple choice tests have the advantage of being machine scoreable and, thus, tests constructed in this format are easier and less costly to administer, and less subject to allegations of evaluation bias. Kenya has probably had more experience with such testing than most African countries, though a large proportion of the examination papers administered by the National Examinations Council are set in the more conventional essay mode and marked by trained evaluators.

In the early 1970s, major efforts were made to increase the proportion of Certificate of Primary Education examination items requiring 'reasoning' as opposed to use of descriptive information in answering questions (Somerset, 1983, 1987; Savage, 1985). Comparison of test items in the 1973 and 1976 examinations indicated that while the proportion of descriptive items declined from 74% to 23%, those involving some reasoning increased to 28% the remainder measuring lower level cognitive skills. The 1973 examination apparently did not require any reasoning for successful performance (Heyneman, 1986, p. 43).

Our interest in examination construction was prompted by work which examined how adults used literacy skills and scientific knowledge acquired in primary schools (Eisemon *et al.,* 1987; Eisemon and Nyamete, 1990). We found that adults experienced a great deal of difficulty in integrating knowledge acquired in school and from social experience in performing practical tasks involving administration of modern medicines and use of agricultural chemicals. In studies of Kenyan mothers' comprehension of texts for using commercial oral rehydration salts solutions, for example, well-schooled mothers with complete primary education who used these products often combined the treatment with administration of traditional purgatives. They did not understand how oral rehydration therapy worked and, thus, also relied on traditional treatments they could explain but which might worsen their child's condition.

Oral rehydration therapy is mentioned in the health syllabus and questions about it appear in the Kenya Certificate of Primary Education examination which are expressed in the multiple choice format; for instance: Your baby brother is suffering from diarrhoea and vomiting. Which one of the following would you give him to improve his condition? (A) plenty of fruit juice; (B) breast milk regularly; (C) plenty of water with a little sugar and salt; or (D) plenty of milk and porridge (KNEC, 1984, p. 119). (C) is the Correct answer although the administration of any fluids and nourishment is essential to recovery from diarrhoeal illnesses. When teachers we have observed prepare Standard VIII students for the examination, they usually have them recite the correct answer and transcribe the question into their exercise books for later study. The formula for oral rehydration therapy is to be committed to memory so that it can be recalled.

An experiment was conducted in a Nairobi primary school in which we asked teachers to prepare Standard VIII students for two sets of mock examination questions; one taken from the Health Science and Science sample papers prepared by the Kenya National Examinations Council, and the other covering similar topics that were revised to elicit high level cognitive skills. The revised questions were expressed in the multiple choice format of the sample papers (Eisemon *et al.*, 1988). The difference had to do with how the questions were constructed and what they required of students. For example, a question on knowledge of incubation, vaccination, immunization and modes of transmission of infectious diseases that in the sample paper merely required students to recognize the definition of immunization was changed so that students had to infer the correct answer. The premises were imbedded in a scenario that like the question concerning oral rehydration therapy, represented events in everyday life. But the 'wrong' answers were not plausible if a student actually understood that immunization usually confers immunity even when a child is exposed to contagious diseases.

The revised questions promoted significant changes in the ways teachers prepared students to answer them. Teachers spent more time on lesson preparation and read the relevant sections of the teacher guides and student textbooks. Their lesson plans emphasized explaining the meaning of new concepts and terminology. In the review lessons, teachers explained disease processes and various precautionary or treatment modalities. The teachers commented on how difficult it was to prepare for and teach the lessons in comparison to the review lessons that are normally taught. The students were then tested to ascertain what they had learned. Preparation for the revised questions enhanced performance on both tests. Think aloud protocols were obtained from a sample of students to examine how they answered the questions. The results indicated that the revised questions elicited explanatory knowledge of oral rehydration therapy and other health subjects, and that the students acquired this from the instruction they had received. Examination preparation had not imparted mere facts.

Improving achievement testing should not be limited to better examination administration, marking and reporting of results, though that is certainly important. The construction of examination questions needs to be improved as well. The psychometric properties of examination items do not necessarily reveal a great deal about how good a question is in eliciting meaningful demonstrations of competence or encouraging teaching that facilitates development of high level cognitive skills. These objectives should guide the construction of test items to which teaching efforts are addressed. Major changes in teaching practices are likely to result which, in turn, influence what is learned **and bow** school knowledge and skills are used.

CONCLUSIONS

Primary school leaving examinations in many African countries, those which select students for secondary education, either cover only the academic subjects in the school syllabus or emphasize these subjects in weighting student performance. From the standpoint of the majority of primary school leavers who do not go on to secondary school and who will remain agriculturalists or combine agriculture with informal sector employment, the examinations should be designed in such a way that the subjects which should be the most important to them are taught and achievement measured. This means testing subjects like modern agriculture, health and nutrition and giving the marks obtained importance in examination results as is the case in Kenya. Different approaches to teaching and assessing learning in language arts and mathematics to foster acquisition of functional literacy and numeracy skills are also required.

The language of assessment influences the cognitive skills examination items measure and, in turn, affects teaching and how school leavers use information they have learned in school. Most assessment is carried out in a metropolitan language. However, primary schooling is the terminal stage of schooling for most children who will have little opportunity to develop or even retain proficiency in metropolitan languages after they leave school. Use of a vernacular language for assessment of student performance in scientific and practical subjects is suggested.

Finally, careful attention must be given to the ways achievement is measured. Teachers teach students to answer examination questions. If examination questions do not measure high level cognitive skills, teachers will place importance on students' recall of correct information for examinations. Changing test items to elicit high level cognitive skills associated with reasoning and problem solving and knowledge that is relevant to performing tasks in daily life may improve teaching and strengthen the effects of schooling as well.

A prerequisite for any successful strategy for improving examinations is a capacity to undertake research involving not only conventional psychometric studies of test characteristics but also investigation of how students perform examination tasks and how the examinations relate to the instruction they receive. Few examining authorities in rich countries have such capacity. But the need to acquire it may be greater for many African countries in which external examinations have a more important role in allocating educational opportunities and resources for improving the quality of education are more limited.

Acknowledgements - A draft of this paper was presented at a conference organized by the World Bank on Uses of Examinations and Standardized Testing in Africa. Lusaka. Zambia, 28 November-1 December 1988. Reference is also made to papers presented at another World Bank seminar on Using Examinations and Testing to Improve Educational Quality held in Kathmandu. Nepal. 1-3 November 1989. Some of the research reported here was supported by grants from the International Development Research Centre for studies carried out in Kenya and from the USAID Bridges Project administered by Harvard University for fieldwork in Burundi. Professor John Schwille at Michigan State University commented on earlier drafts of this manuscript. His many contributions are gratefully acknowledged.

REFERENCES

Altbach, P. (1972) *The University in Transition.* Sindhu. Bombay.

Ashby, E. (1966) *Universities, British, Indian and African.* Harvard University, Cambridge, MA, U.S.A.

Basu, A. (1974) *The Growth of Education and Political Development in India, 1898-1920.* Oxford University Press, Delhi.

Berry, J. W. (1985) Learning mathematics in a second language: some cross-cultural issues. *Learning of Mathematics* 5, 18-23.

Bude, U. (1985) *Primary Schools, Local Community and Development in Africa.* Nomos Verlagsgesellschaft. Baden-Baden.

Eisemon, T. O. and Nyamete. A. (1990) School literacy and agricultural modernization in Kenya. *Comparative Education Review,* 34.

Eisemon, T. O. (1989) The impact of primary schooling on agricultural thinking and practices in Burundi and Kenya. *Studies in Science Education,* 17.

Eisemon, T. O. (1989) Testing Practical Knowledge and Skills. Paper presented to World Bank Seminar on Using Examinations to Improve Educational Quality. Kathmandu. Nepal, 1-3 November.

Eisemon, T. O., Schwille. J. and Prouty, R. (1989) Empirical Results and Conventional Wisdom: Strategies for Increasing Primary School Effectiveness in Burundi. Paper presented to World Bank Seminar on Effective Schools in Developing Countries. September 1989.

Eisemon. T. O., Schwille. J. and Prouty. R. (1989) Does Schooling Make a Better Farmer? Schooling and Agricultural Productivity in Burundi. Bridges Project Research Report. Harvard Graduate School of Education. Cambridge. MA. U.S.A. (in preparation).

Eisemon. T. O. (1988) *Benefiting From Basic Education. School Quality and Functional Literacy" in Kenya.* Pergamon. Oxford.

Eisemon. T. O. Patel. V. and Abagi. J. (1988) Read these instructions carefully: examination reform and improving health education in Kenya. *International Journal of Educational Development* 8. 55-66.

Eisemon, T. O., Ongesa, E. and Hart, L. (1988) Schooling for self-employment: the acquisition of craft production skills in Kenya. *International Journal of Educational Development* 8, 271-278.

Eisemon, T. O., Patel, V. and Ole Sena, S. (1987) Use of informal and formal knowledge in comprehension of instructions for oral rehydration therapy in Kenya. *Social Science and Medicine* 25, 1225-1234.

Eisemon, T. O., Eshiwani, G. and Rajwani, F. (1986) Socio-economic consequences of school expansion and Kenya. *International Journal of Comparative Education* 1,99-137.

Eisemon, T. O., Hallett, M. and Mandu, J. (1986) Folk tales and school literature in Kenya: what makes a children's story African? *Comparative Education Review* 30, 232-247.

Eisemon, T. O. (1982) *The Science Profession in the Third World: Studies from India and Kenya.* Praeger, New York.

Eshiwani, G. S. (1986) Utilization of Examinations. Unpublished paper. Bureau of Educational

Research, Kenyatta University, Kenya. Foster, P. (1965) *Education and Social Change in Ghana.* University of Chicago, Chicago.

Heyneman. S. P. (1987) Use of examinations in developing countries: selection, research and education sector management. *International Journal of Educational Development* 7, 251-263.

Heyneman. S. P. (1986) Educational Testing to Maximise Economic Performance. Unpublished paper presented at the Annual Meeting of the Comparative and International Education Society, Toronto.

Heyneman, S. P., Farrel, J. P. and Spulueda-Stuardo, M. A. (1981) Textbooks and achievement: what we know. *Journal of Curriculum Studies* 13, 227-246.

Heyneman, S. P. and Loxley, W. (1983) The effect of primary-school quality on academic achievement across 29 high and low-income countries. *American Journal of Sociology* 88,1162-1194.

Kenya National Examinations Council (1984) *KCPE Sample Papers.* KNEC, Nairobi.

Ramsay, J. O. and Abrahamowicz, M. (1989) Binomial regression with monotone splines: a psychometric application. Department of Psychology, McGill University (in preparation).

Savage, M. (1985) The Role of Examinations in Science Education in Kenyan Primary Schools. Kenya National Examinations Council, Nairobi (in preparation).

Somerset, H. C. A. (1983) Examinations Reform: The Kenya Experience. Unpublished report prepared for the World Bank. Revised and published (1987) as *Examination Reform in Kenya,* World Bank Discussion Paper, Education and Training Series.

Yoloye, E. A. (1985) Dependence and interdependence in education: two case-studies from Africa. *Prospects* 15, 239-250.

Zepp, R. A. (1982) Bilinguals understanding of logical connectives in English and Sesotho. *Educational Studies in Mathematics* 13, 205-221.

4.2. Criterion-Referenced Testing. Rationale for Implementation (Abstracts)

CRT Implementation Committee
Department of Curriculum Development and Evaluation

Ministry of Education
1992

(CRT Implementation Committee. Department of Curriculum Development and Evaluation. Ministry of Education, Republic of Botswana, 1992, pp. 3-12)

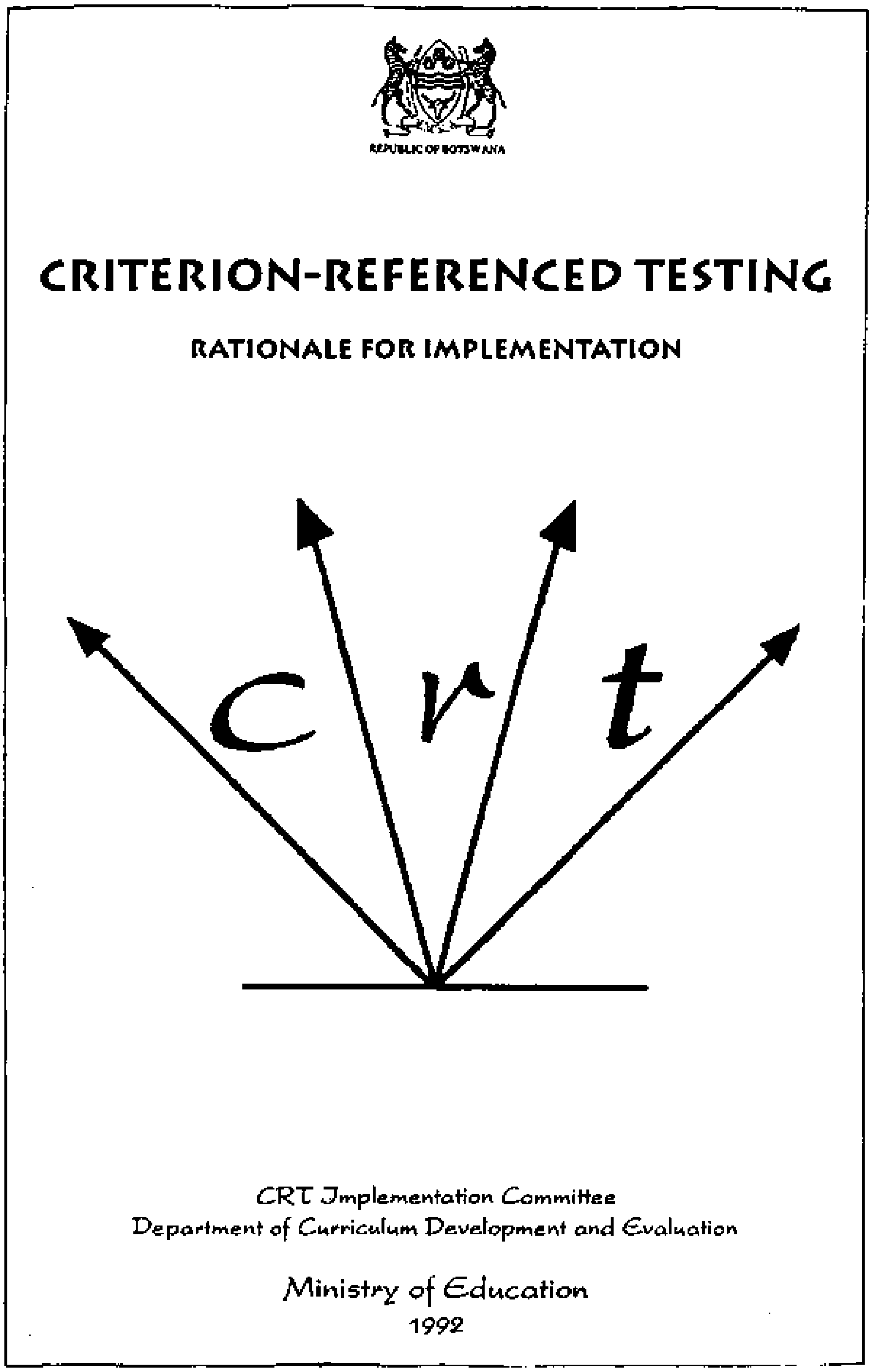

REPUBLIC OF BOTSWANA

CRITERION-REFERENCED TESTING

RATIONALE FOR IMPLEMENTATION

crt

CRT Implementation Committee
Department of Curriculum Development and Evaluation

Ministry of Education
1992

PRESENT ASSESSMENT PROCEDURES AND PRACTICES

For the Nine-Year Basic Education Programme, the assessment of students through national examinations occurs at the end of each phase in the structure, that is 7 years of primary, the Primary School Leaving Examination (PSLE) and at the completion of 2 years of junior secondary, the Junior Certificate Examination (JCE). The purpose has been to provide information primarily for selection. The question we have been asking each year was Who obtained scores falling in the top 20%, 30%, 75% etc. of all the examinees?' The system that best suits this requirement is refered to as 'norm-referenced' testing. The norm here is the specific group of students writing a national examination in any one year. The performance of each student is compared to that of the norm group. A student score can be in the top 10% or 30% relative to the scores of other students taking the same examination.

A similar practice prevails in the school where monthly or end of year examination scores are rank ordered in each class or sometimes stream, and a student is reported as in position 1, 2 or 3. The interpretation that some parents put on the rank order is that their child is the best in the class (which is correct), and therefore that their child performs at a level that should get them an "A" in the external examination (an incorrect conclusion). Because the score only gives a position which is relative to the group that is taking the test, in this case their class, this position can never be generalised to a different norm group, say the national population of the PSLE examinees. When a group changes, the performance pattern may change, so would the relative position of any single score.

The PSLE uses instruments developed by the Department of Curriculum Development and Evaluation (CD&E). There are seven achievement test papers presented for the PSLE. one objective paper for each of the examinable subjects, i.e. Setswana. English, Mathematics. Science and Social Studies: and a composition and letter writing paper in Setswana and English. The PSLE is a norm-referenced lest, and this means therefore that the scores of each individual student obtain meaning by being compared to the scores of the other students who sat for the PSLE in the same year. The treatment of scores obtained in the JCE is the same as that of the PSLE.

Limitations of the Norm-Referenced System as Practised

1. The curriculum coverage of the papers may not remain consistent across the years.

Curriculum coverage in the PSLE achievement papers is controlled through conscious effort by examiners to have a fair representation of the different units in the final paper. One obvious problem has been keeping this representation of units in the examination paper constant from year to year. Table 1. and Table 2. show the differences in the scheme of questions appearing in the Setswana papers for 1988 and 1989 and the Mathematics papers for 1990 and 1991 respectively.

Table 1. Distribution of items over language categories in the 1988 and 1989 Setswana PSLE Multiple-choice Exam.

	1988 Items		**1989 Items**	
Language Category	*Num.*	*Percent*	*Num.*	*Percent*
1. Grammar/syntax	8	13	11	18
2. Word knowledge/vocabulary	27	45	11	18
3. Sentence mechanics	6	10	8	13
4. Use of figurative language	4	7	8	13
5. Reading Comprehension	15	25	21	35
6. Unclassified	0	0	1	2
TOTAL	**60**	**100**	**60**	**99**

NOTE: a. This table is based on an item task analysis compiled by Naledi Ratsoma, Senior Curriculum Development Officer, Setswana.
b. For a classification of the sub-areas of the item task analysis, refer to Appendix 1.

Table 2. Distribution of items over topics in the 1990 and 1991 Mathematics PSLE Multiple-choice Exam.

	1990 Items		1991 Items	
Mathematics Topics	*Num*	*Percent*	*Num*	*Percent*
1. Sets	3	5	4	*1*
2. Numbers and Operations	9	15	8	13
3. Fractions and Decimals	8	13	8	13
4. Money	3	5	4	7
5. Time	5	8	8	13
6. Measurement	7	12	9	15
7.. Geometry	15	25	9	15
8. Pictorial Representation	7	12	8	13
9. Algebra	3	5	2	3
TOTAL	**60**	**100**	**60**	**99**

In view of these differences in the curriculum coverage of the two examination papers, it can be argued that students writing the two papers may have not necessarily been exposed to the same tasks. These two papers are therefore not parallel. If two papers are not parallel, comparison of student performance across the years is definitely limited: hence changes in the standards of performance within each subject are difficult to monitor. This also presents a problem if one wants to compare particular domains or sub-areas in the subject, say ‘use of figurative language’ as in the case of Setswana. or Geometry in Mathematics. It should however be noted that the problem illustrated here is not only perculiar to the two subjects.

2. Test results appear to be insensitive to improvements in educational input.

Test raw scores in each of the five examinable PSLE subject areas are standardised to a common scale (T-scores with a mean of 50 and a standard deviation of 10). The letter grades for each subject are derived from fixed cut-off values, and these have remained constant across years. T-scores are then averaged across subjects and the average score (aggregate) is used for selection. Table 3. shows the T-score cut-off points for the letter grades while Figure 1. is a representation of those on a normal curve.

Table 3. Standard scores (T-scores) cut-off points for average grade levels A B C D and E.

Letter Grade	**Standard Score Range**	**Standard Deviation Range**	**Percentage of Candidates (approx.)**
A	63+	+ 1.3 SD and over	7%
B	55-62	+0.5 SD to + 1.2 SD	24%
C	46-54	-0.4 SD to +0.4 SD	41%
D	-45	Below -0 5 SD	28%

NOTE: The statistics given for the approximate percentages of candidates that obtain different grades each year are averages calculated over four consecutive years.

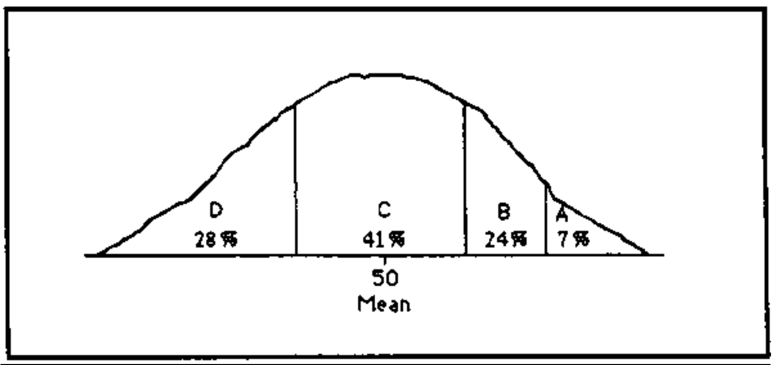

Figure 1

The meaning of each letter grade would remain constant only if the performance of the PSLE candidates remains consistent across the years. In effect what really happens across the years is that irrespective of the changing groups of candidates taking the PSLE nationally, performance on this examination remains consistent because the ‘A’, ‘B’, ‘C’, and ‘D’ proportions remain the same. These grades therefore, do not tell us much about actual student performances from year to year. They present a rank-ordering of students. In his discussion on selection examinations and achievement testing in Botswana, Somerset emphasised the importance of a more informative assessment system that goes beyond sorting students into a performance order. He alludes to the fact that “Education Officers, teacher trainers, in-service teams, curriculum developers and the teachers themselves should be told which subjects and which topics caused candidates most difficulties so that appropriate remedial action can be taken” (Somerset, 1977).

3. Examination reports do not describe the knowledge and skills which students have.

The current reporting system does not focus on the performance of an individual student with regard to the knowledge and skills instruction was aimed at. Rather reporting focuses on the position of the student in relation to other students who sat the same examination.

4. Test results cannot be used easily as a basis for advising students for career development.

In addition to aptitude tests which provide information about a student’s potential ability in different fields of study, career guidance officers need achievement test results to advise students since they (achievement tests) describe student competencies. The present reports on achievement tests do not reflect such competencies, hence they have limitations if they are to be used as a basis for individual career counselling.

5. The correspondence between stated curriculum objectives and the questions which appear on any year’s test is usually contested by many hers.

As it has already been established earlier in the discussion, the achievement domains which the examinations sample across the years are quite inconsistent. This is because of the norm-referenced testing procedures, which select test items on the basis of specified statistical features. The items which meet such specifications may not necessarily be those that test the skills emphasised in the instructional programme being examined. As a result, teachers sometimes query the curriculum validity of the examinations.

6. The reliance on a single ‘high stakes’ examination score (while ignoring many years of student performance in the classroom) is disconcerting.

The PSLE and some subjects areas in the JCE do not use scores from continuous assessments for certification. Teachers have voiced their dissatisfaction with a system of certification that ignores teacher assessments with the argument that they (teachers) have a better opportunity to give more valid assessments of student performances across the curriculum, than a single 1 hour examination paper.

7. *The norm-referenced reporting system does not provide the description of individual student competencies in practical subject areas.*

The Junior Certificate Examination assesses students in the different practical subject fields, and as in the PSLE, reports reflect a comparison of an individual student performance with the performance of other students. The report does not describe to the prospective trainer or employer the kinds of skills that a student can or cannot perform.

From the above-listed limitations we can conclude that it is difficult to use norm-referenced tests to determine if a student has mastered the specific skills prescribed by their instructional programme, as the primary function of the tests is to provide information about the student’s relative standing. This however does not mean that the test data are irrelevant for instructional planning.

AN ASSESSMENT SYSTEM THAT ADDRESSES THE KEY LIMITATIONS OF CURRENT ASSESSMENT PRACTICES.

The preceding discussion presents indications that the present assessment procedures are not compatible with the changes in the curriculum. It is the expressed interest of the current curriculum to focus instructional activities on the learner. An alternative system that may be used to interpret the meaning of students' scores is 'criterion-referenced' approach.

Criterion-Referenced Testing

The early stages of criterion-referenced testing are very closely associated with learner-centred approaches such as individualised instruction or programmed learning, and are therefore designed to measure the mastery of specific learning outcomes or to describe "what Johnny can do" (Popham, 1978). This system is usually used in a situation that requires information on the learning of individual students. The learning of an individual student is in this case compared against the desired learning target. The judgement of individual student performance is against defined criteria, in the form of sets of learning outcomes.

In order to correct the limitations of the present system and retain selection procedures that will continue to be used at national level, a move should be made towards a system whose main function would be to:-

1) describe what students can do throughout their schooling, in order to report their achievements as well as diagnose their problems, and

2) report their competencies at the end of primary or secondary level education such that grade levels for certification examinations are referenced to a criteria of stipulated competencies.

At school level, assessment needs to be more integrated with the instructional activities, such that it informs the instructional decision making process. Assessment should become a systematic process of gathering information about individual student performance used to describe 'what Johnny, Tshepo, Mpho.... can do'. The main focus of assessment in this mode is to help students learn. This distinction is very vital in the conceptualisation of an assessment system that is programmed to provide feedback to teachers, such that they can make professional judgements about appropriate adjustments in the instructional environment. Testing then becomes a systematic process of gathering evidence of what the child can do relative to the instructional outcome, gathered at an opportune time that will allow the teacher to use the feedback to make judgements about appropriate adjustments in the instructional environment.

Whilst the selection role of the national Primary School Leaving Examination may remain, this will become a secondary function. The main focus of national examinations will be to describe student performances as measured by tests that are fully controlled by the curriculum, with certification criteria that reflect student competencies rather than their relative standing when compared to the norm group.

Key Benefits of Criterion-Referenced Testing

1. Improving the match between the notional examinations and classroom instruction.

> "The curriculum that is actually implemented by teachers in schools is, called the **effective curriculum.** The effective curriculum consists of those topics and learning objectives that teachers actually teach to students. The effective curriculum stands in contrast to the **desired curriculum.** The desired curriculum consists of those topics and learning objectives which are found in the national curriculum and which government desires to be taught. The effective and the desired curicula are often overlapping but are also different. Obviously, when a national curriculum exists and when government invests in educational inputs, it is desirable to have these two curicula be congruent." Nitko (1989)

A criterion-referenced test development process provides a common point of reference for instruction, classroom assessment, and external assessments (national examinations). This provision is in the detailed curriculum objectives that precede lesson preparation and test construction. The test blueprint defines desired student learning outcomes; the content or skill as well as the cognitive processes involved. The blueprint presented in Figure 2. attempts to focus both teaching and testing on the same curriculum.

BLOOM'S TAXONOMY	KNOW LEDGE	COMPREHEN SION	APPLICA TION	ANALY SIS	SYNTHE SIS	EVALUA TION
READING		1. read a passage and answer questions that follow it.	1. pronounce each word according to spelling	1. identify in text correct punctuation and capitalisation	1. read passage and dramatize it.	
		2. read a text and carry out instructions		2. read text and state its main points.		

a. This table is based on the STD 7 reading instructional objectives (Setswana).
b. Every one of these statements is preceded by the phrase Pupils will be able to...
c. For an example of a complete test blueprint, refer to Appendix 2.

> "In the presence of a high-stakes' examination, the key to making the effective curriculum correspond more closely to the desired curriculum is to create examinations that are very tightly aligned with the desired curriculum. The examination must clearly emphasize the student performances which are emphasized by the curriculum. Further, all of the important curriculum objectives should be represented in the test specifications (blueprint) and teachers should be convinced that these objectives may appear on an examination. As a result, the force that motivates teachers to teach to the test is harnessed and directed to the desired end: **Teaching to the test is essentially teaching the desired curriculum.**" Nitko (1989)

Because the 'high stakes' examinations may have such a strong influence on what is taught in the classrooms, an attempt to focus the two curicula on the same area should make teaching more effective and testing more valid.

2. Examinations reports describe the knowledge and skills which students have.

> "Since test results can be referenced to pupil performances, one may analyze the results of the national examination to describe what students are capable of doing." Nitko (1989)

A criterion referenced testing system bases instruction and testing on well defined student learning outcomes, which are tasks that students will perform if curriculum objectives have been attained. A test that checks for the attainment of these objectives gives a score that can be interpreted as an indicator of the extent to which a student has achieved the stated curriculum objectives. Controlled sampling of the curriculum allows for the generalisation of a score on a test to performance on the overall domain being sampled.

3. The correspondence between staled curriculum objectives and the questions which appear on any year's test is clear to many teachers.

There are procedures in criterion-referenced testing that enhance the correspondence between a test item (or assessment task) and the objective it is intended to assess. The objective is the starting point. Further definition of the domain described by the objective is given by the cognitive category of the objective in the blueprint. Item writing rules provide further definition of the task through sample items and guide-lines on the construction of the different components of the item.

4. The curriculum coverage of the papers is controlled for consistency across the years.

Table 4. shows an example of a test plan with a representation of the different parts of the curriculum in a test. National examinations based on criterion-referenced test development procedures will have test plans which will serve as sampling procedures. Test plans control the selection of objectives to be tested, and if the same test plans are used in any two years, then curriculum coverage of the two examinations should be comparable.

Table 4 The Test Plan.

STANDARD 5	**NO. OF OBJECTIVES**	**NO. OF ITEMS**
Our Country		
Location	5	2
Our Resources	8	3
Culture	2	1
TOTALS		

a. This table is based on the STD 5 instructional objectives in Social Studies.
b. For an example of a more detailed lest plan refer to Appendix 3.

5. *National educational progress can be evaluated.*

"Since test results can be referenced to pupil performances, one may analyze the results of the national examination to describe what students are capable of doing. Since test specifications (blueprints) remain constant over several years, one may monitor progress on specific curriculum objectives by comparing over the years the percentage of the nation that has learned each objective. Pupils' performance on clusters of objectives (e.g., those dealing with knowledge of concepts versus those dealing with solving unfamiliar problems) can be compared as well." Nitko (1989)

Figure 3. represents a situation where national test results do reflect the changing performance of students across time. The information allows for detection of the effects of educational policies, curriculum materials and teaching strategies.

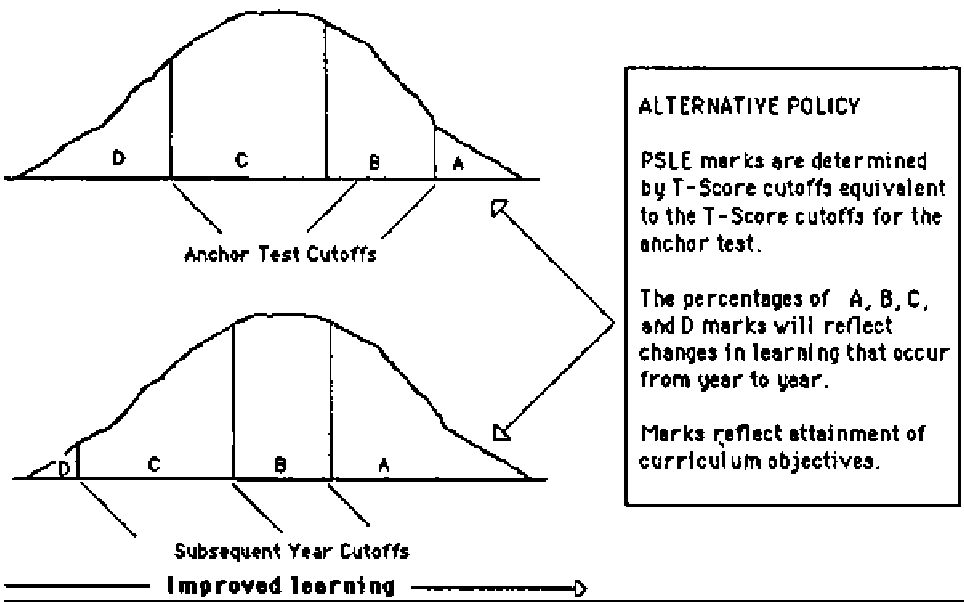

Figure 3

ALTERNATIVE POLICY

PSLE marks are determined by T-Score cutoffs equivalent to the T-Score cutoffs for the anchor test.

The percentages of A, B, C, and D marks will reflect changes in learning that occur from year to year.

Marks reflect attainment of curriculum objectives.

Student specific test results can be used to describe what students in a school or district can do. School progress can be monitored. The information obtained would allow school administrators to make appropriate decisions on improving the performance of the school. In-service programmes would also be targeted on deficiencies revealed by patterns of student achievement in their constituencies.

4.3. Evaluation of Examination Needs of Primary & Secondary Schools in Namibia (Abstracts)

University of Cambridge Local Examinations Syndicate[1]

[1] International Consultancy & Training Services, October 1990, abstracts pp. 23-34.

Analysis of Question Paper Quality

The following analysis of question papers is an attempt to indicate areas which are likely to need attention when assessment schemes are developed to support curriculum development at Primary, Junior Secondary and Senior Secondary levels....

Physical Appearance

Given that we are dealing with an examination system in which students, in general, do very badly, it is important that the physical appearance of the paper and its layout should be as user-friendly as possible. Quite simply, the students have enough difficulty answering the questions without being placed under greater pressure by the way in which they are presented. This is partially the responsibility of the Examiners who set the paper but there should be quality control systems within the Examinations Division to ensure that papers are properly edited. For example, where a question requires the students to use a piece of stimulus material to answer several part-questions, it is important that the stimulus material can be seen as the questions are read. It is not desirable for students to have to turn over the page as happens frequently at present.

The presentation of question papers would be greatly improved if moderators and Examiners were involved in question paper design and if professional staff of the Examinations Division had a greater editorial role.

This has probably not developed in the past since many papers were directly imported from the Cape but it is a matter which will need attention in the future....

It is also noticeable that the question papers are, in general, lacking in graphic material such as photographs, line diagrams, graphs, charts and maps. This is a matter which will need urgent attention if the question papers are to test higher level skills rather than recall and if they are to be made more accessible to a wider ability range. This would be an important issue in any country but in Namibia where command of the language of instruction is, and will continue to be a problem for the foreseeable future, the use of graphic information will help those whose reading comprehension is weak.

In addition, the use of graphic materials also raises the content validity of question papers in subjects where, in the real world, graphic material is the normal way of communicating information. For example, in a recent Std. 8 English paper, students were asked to extract information from some advertisements but these were presented as plain typescript without artwork and as a result did not look like real advertisements. This shows a technical weakness and is unlikely to interest students already struggling with the language.

It is recommended that Examiners are actively encouraged to consider the physical appearance of question papers and to use graphic stimulus material where appropriate.

It was also observed that many question papers required students to write their answers on separate answer booklets. This required the rubrics to be more complicated than would have been the case had students answered on the question paper. It also causes, as evidenced by comments in Examiners' reports, students to make mistakes in copying question numbers, writing their names on the front etc... Such administrative complexities are confusing for the students but equally importantly they are frustrating for markers trying to locate answers and this necessarily results in a reduction in examiner reliability.

It is recommended that where possible and where economically viable students should answer in spaces provided in the question paper. The layout of the paper should assist rather than hinder students.

Wording of Question Papers

Since Namibia is a country where a very large percentage of the student population have difficulties with the language in which the examination is set, whether it be English or Afrikaans, it is extremely important that the reading level of both the rubrics and the questions is set appropriately. If the reading level is inaccessibly high then the validity of the papers is reduced since the knowledge and skills which the paper purports to test are hidden by the language element. For example, the Std. 4 History paper included the following words and phrases:»erected according to«,»vagrancy of the indigenous people«,»which culminated in«,»led a punitive expeditions»signed in the vicinity«of.

It is recommended that Examiners and moderators are directed to pay particular attention to the reading levels in order to make them more accessible to the target population.

Question Types and Skills Tested

To criticise the content of past question papers is somewhat unfair since Examiners have been constrained by syllabuses which place much emphasis on recall of facts, text book proofs, etc., and, in the absence of training, have closely followed the general format of papers set in the Cape.

A Gazette[1] of the Examinations Board sets out the weightings of different skills to be tested as:

> *»... every question paper shall be graded to test the pupils' knowledge and skill at the levels of factual knowledge, understanding and insight, in the proportion of 50%, 33 1/3%, 16 2/3% respectively;«*

[1] Gazette No. 1/89, Volume 6, 1 March 1989, Examinations Board of South West Africa.

No-one believes that the teachers can follow these instructions and it is generally accepted that question papers set in schools test little more than recall. Moreover, a brief survey reveals that external exams suffer from the same problem. This can be illustrated by an analysis of the Std. 4, Ordinary Grade, History paper for 1989 (Appendix I):

Standard 4 History (Ordinary Grade) 1989

Section A

Questions 1 to 6 were short answer questions all requiring recall of a name. For example,»Name the German officer who managed to free Omaruru from the Herero attack in 1904«,»Name the British commander during the Battle of >Congella< «.

Questions 7 to 12 were a badly set out form of multiple-choice with a negative stem:»Write... the answer between brackets that does not suit the introductory sentence.«

The Republic of Orange Free State (was established in 1854/had Josias Hoffman as its first president/was north of the Vaal-rivier/had Bloemfontein as its capital).

Questions 13 to 18 were short answer questions of the gap filling type. Five of these required a name to be inserted.

»In 1874 Lord Carnarvon sent....., a British historian to South Africa to propagate the idea of a federation.«

Questions 19 to 24 required students to match items in two parallel lists. This is effectively a multiple-choice situation with decreasing numbers of options. The questions all concerned the matching of people's names with an associated act.

Questions 25 to 29 used a map as stimulus material but each question merely required recall of a name or a date.

»When (month and year) was the town numbered 5 on the map conquered by the Union troops?«

Questions in section B required students to write paragraphs containing»at least five facts«on a number of topics.

»Describe the events since 1954 which culminated in the founding of the Republic of South Africa.«

Questions in section C asked for essay-type answers each containing»at least ten applicable facts«.

»Write an essay on the efforts of President M W Pretorius to unite the Orange Free State and the Transvaal.«

As can be seen from the above the question paper places a very heavy emphasis on the recall of names and events. This is a direct result of the teaching syllabus and subsequently ensures that teachers will continue to teach by rote....

The nature of the questions also leads one to question the relevance of what is being tested and hence taught. Further evidence of this can be gained by looking at the Std. 8 paper for Mathematics. However this should be considered with the knowledge that there are serious problems in the teaching of Mathematics in Namibia. Students, teachers and examiners expect extremely low levels of achievement in Mathematics and they are not disappointed in this expectation. It was suggested by a Senior Officer within the Ministry that over the years the students had developed a»phobia for Mathematics«. This was denied by a Mathematics teacher who went on to suggest that it was the teachers who had the phobia! Whatever the truth there is clearly a severe problem which has taken on the form of a vicious circle: poor and unconfident teachers create a fear of Mathematics in students who go on to become unconfident teachers... and so on. This matter clearly requires the concerted efforts of curriculum developers, material writers and teacher trainers. **The assessment system must also play its part by placing greater emphasis on applications of Mathematics in real life situations and at more realistic levels....**

Examination Patterns for the Future

At present the examinations which take place in the primary phase are for the purpose of selection for the next Grade. Whether by design or by accident they have become a harsh filter with the majority of students unable to pass particularly in subjects such as Mathematics and Languages....

With the introduction of automatic promotion in the primary phase the need for a selective examination will be greatly diminished. Indeed prior to the end of primary examination proposed below, the main purposes should be for diagnosis of individual learner difficulties, evaluation of the teaching programme, and reporting student progress at the level of a school report.

It is recommended that there are no external or semi-external summative examinations during the primary phase prior to the PSLE and that schools are permitted to devise their own assessment schemes for reporting purposes.

If necessary, schools should be given guidance and support in the development of non-threatening formative testing methods. They would be helped in this if the primary curriculum explicitly identified levels of achievement which could be tested in each Grade. These **attainment targets** would then act as benchmarks when constructing and grading tests. It is hoped that an additional advantage to be gained from creating a less formal assessment system, at this level is that the administrative pressures on teachers and principals will be reduced allowing them to concentrate on teaching.

Whilst end-of-Grade testing would not be standardised it would be important to introduce standardised tests in a few key areas for the purposes of diagnoses and evaluation. In particular batteries of standardised tests should be available in the fields of basic numeracy and reading.

The frequency of such testing would depend on the curriculum and the attainment targets set. As a minimum, students should be tested annually in reading and/or oral communication and a record of progress kept. In Arithmetic, testing could take the form of criterion-referenced end-of-unit tests to determine whether individual pupils have mastered a particular concept. The tests should be constructed to encourage positive achievement. As a general rule, one would hope to see about 70% of pupils mastering a concept at a 70-80% success rate in such criterion-referenced tests. This is in direct contrast to the low success rates currently achieved in the promotional tests.

It is strongly recommended that the test results be used for identifying individual students within a school who require remedial assistance; diagnostic testing should be followed by active remedial work where necessary.

It is beyond the scope of this report to specify the precise nature of the primary assessment since the primary curriculum is not yet in place.

However, it is strongly recommended that a small panel of experts in primary teaching, curriculum development and testing be set up immediately to consider requirements in this area. Two of the members should be identified as potential Examination Officers of the NEAA to eventually assume special responsibility for primary testing.

The following should be considered guiding principles by the panel:

1. Testing should be non-threatening and should reward positive achievement in the primary phase.

2. Much of the testing will be school-based and will be conducted by the class teacher.

3. Batteries of standardised tests in certain skill areas will need to be produced centrally by NEAA for use by schools.

4. The tests should allow for diagnoses of learner difficulties and for the evaluation of courses/materials.

5. Administration of the tests should not place unreasonable demands on the human or physical resources of a school.

Primary School Leaving Examination

Since the end of Grade 6 will be the exit point from the education system for many students it will be necessary to establish a formal Primary School Leaving Examination.

Since the curriculum for Grades 1-6 has not yet been developed it is not possible to predict in detail what the format should be. This should be agreed by the»task force«created to develop the curriculum.

It is recommended that the primary assessment panel referred to above be involved in both the design of the primary curriculum and the design of the PSLE.

Since it is important that the PSLE is perceived to be an appropriately demanding, valid and reliable examination, it should be administered by the NEAA.

It should also be a predominantly external examination with the proportion of marks allocated to school-based assessment limited to, say, 20%. (If desired this percentage could be increased for predominantly practical subjects provided that adequate controls could be imposed in order to keep reliability to an acceptable level.)

The examination should be certificated by subject rather than by groups of subject. As argued elsewhere, this would ensure that students were rewarded for positive achievement.

Grading should not be by predetermined cut-off points but should be by expert judgement coupled with statistical evidence. This will help to reduce the fluctuations in pass rate due to variation in the level of difficulty of papers from year to year.

The question papers should be designed to reflect the best aspects of the new primary curriculum. In each subject the questions should test the range of skills and content required by the syllabus and not place undue emphasis on recall of isolated facts. The situations chosen for problem-solving questions and others should be relevant as far as young Namibians are concerned and should avoid unacceptable degrees of cultural bias. These issues should be controlled by having each PSLE question paper moderated by a panel of experts as advocated for higher level examinations.

Whilst the papers should maintain appropriate standards and should include tasks which the more able would find demanding the emphasis should be on allowing students to show what they know and can do. They should therefore be designed to give a higher mean mark and standard deviation than exams do at present. Associated with this, the marking schemes or memoranda should be detailed enough to ensure inter- and intra-examiner reliability but should not punish all errors, however trivial, as tends to be the case at present.

Since it is highly desirable that the PSLE should reflect a new philosophy of both teaching and testing it is recommended that question paper setters are trained in the theory and practice of item writing before specimen papers are developed for the new curriculum.

Junior Secondary School Certificate

It should be noted that a new broad curriculum for the Junior Secondary phase (Grades 7, 8,9) and proposed syllabuses for the subjects included in that curriculum were presented publicly in Namibia in October 1990. Included in the proposals was an outline for assessment procedures during Grades 7 and 8 only.

The following principles were incorporated:

(a) the assessment would be school-based with no external components;

(b) in all subjects, continuous assessment would be allowed up to a pre-determined maximum weighting (greater for practically based subjects);

(c)»formal tests«would be set and marked by teachers;

(d) promotional criteria would be based on success in specified subjects or groups of subjects rather than on an aggregate mark.

4.4. Primary Science School Leaving Examination (Abstracts)[1]

by Richard Bradbury

[1] Malawi-German Primary Science Project. Occasional Papers No. 1. Domasi. October 1992, pp. 2-8. **Note:** Since 1995 the PSLCE uses multiple-choice test items. Science is now part of a paper called»Science Incorporated«consisting of three parts: Section A»Agriculture«(25 marks), Section B»Science«(30 marks) and Section C»Health Education«(15 marks).

Background to the Primary School Leaving Certificate Examination

Pupils who reach the end of the eight year primary education course in Malawi, in theory at the age of 14 but on average at 15, are expected to take the Primary School Leaving Certificate Examination (PSLCE). This is an external examination set and marked by the Malawi National Examinations Board (MANEB), a parastatal organization which is responsible for all primary and secondary school examinations in the country and for certain other kinds of testing. The PSLCE undoubtedly has a great influence on what is studied in the schools and on how it is taught, particularly in the latter half of primary education (Standards 5 to 8). This is not only because the examination syllabuses (largely perceived through past examination papers) become the de facto curriculum, but also because the PSLCE acts as a selection test for admission to secondary education. Since there is very limited provision of secondary places (under 10 per cent over 100,000 PSLCE candidates each year are accepted for secondary school) there is great competition to do well in the examination. Pupils, parents and teachers insist on studying only those things which are known to be tested in the examination. The consequence is that aspects of examined subjects which are not in the examination are ignored and other parts of the curriculum which are not examined at all, such as physical and religious education and art, are simply dropped in the last few years of primary education.

It is therefore necessary for any curriculum development project in primary education to take this examination into consideration. In view of the shortage of secondary school places, it is unlikely that it will be abolished in the near future (this was anyway tried in the early 1960s with apparently disastrous consequences; Banda, 1982). It should instead be regarded as a necessary evil which can with skill and effort be managed as a positive influence on what is taught and learned. In educational jargon, curriculum development in these circumstances should be assessment-led.

There has recently been some attempt to use this approach to influence the curriculum through the PSCLE. For many years, the examination was administered by the Ministry of Education and Culture (MOEC) with only the final-year secondary examination, the Malawi Secondary Certificate of Education (MSCE) being run by an examining Board, then called the Malawi Certificate of Education and Testing Board (MCETB). The Ministry provided little more than basic administrative support for the examination and the professional inputs to ensure quality were lacking. The question papers in almost all subjects regressed to testing simple recall of often trivial facts, with little or no attempt to test the so-called higher level skills such as comprehension, analysis, reasoning or problem solving. This state of affairs was generally bemoaned but nothing was done about it until 1987 when, with World Bank support, MANEB was formed to replace the MCETB and to take charge of all school examinations in Malawi. A report by Somerset (1987) detailed the deficiencies of the current examinations, particularly PSLCE, and made recommendations for improvements. Between 1989 and 1992 a British test development consultant was attached to MANEB and began to implement some of these recommendations.

A brief summary of what was done may be of use to future curriculum development. The setters and moderators of questions in all subjects were assembled for a one week workshop. Starting from the axiom of»what you test is what you get«(WYTIWYG) they were asked to scrutinise past question papers in order to find out what had been tested in terms of both content and abilities. They were then asked to decide what ought to be tested in the light of the current syllabuses, teachers' guides and pupils' books. Large mismatches were found, particularly in the practically orientated subjects like Agriculture, Home Economics, Needle Craft, and Science and Health Education; the guides and books often promoted an activity or experimental approach to the subjects which was not reflected in the examinations. Participants were then asked to draw up a content/ability specification grid for their subject, showing what balance of each they would wish to test.... Using the grids, they were next asked to set a specimen question paper reflecting this balance. As guidelines, they were given the»principle of the 3Ps«, viz, that questions should as far as possible be based on:

→ Problem: pupils should be asked to find an answer from data given or situations shown, rather than just to supply a fact from memory;

→ Practical: questions should be based on real situations and realistic contexts and as far as possible have some relevance for people in Malawi;

→ Picture: situations should be presented through drawings, photographs, diagrams, maps, graphs or tables as appropriate.

These principles were designed to confront the worst features of the current papers which featured such questions as»name two kinds of latrines«, or, worst of all,»what garment is made in Standard 6«.

Among subsidiary principles used were the idea that a good examination question should be usable as worthwhile teaching material, and that the teacher's guides and pupil's books were a good source for the»3Ps«if their material were adapted somewhat to show slightly unfamiliar situations which could be used to test pupil's understanding of the underlying principles.

The question papers produced by the workshop were later edited and pretested in sample schools to check that the new style of questions was not too difficult for pupils at this level. Following satisfactory results, the papers were printed in quantity and sets sent to each primary school in the country with Standard 8 pupils. Receipt was monitored by means of reply-paid acknowledgement cards. The schools were also informed that papers of this type would be set in the PSLCE from July 1991 onwards, which has indeed been the case.

It may be gathered from the above account that the intention of recent test development has been to exploit the present syllabuses and teaching materials to best advantage, and to encourage teachers by the example of the examinations to widen the range of abilities taught. This has been attempted in all subjects but it is of particular relevance to Science and Health Education where a reasonably good if incomplete set of teachers', guides and pupils' books exists.

It may be worth noting at this point that Somerset (1987) made the following observations:

»In developing new curricula it is important that teaching and learning goals on the one hand, and assessment goals on the other should be closely co-ordinated. If the development of prototype assessment instruments is delayed until after other work on the curriculum has been completed, there is a real danger that the profile of skills tested by the assessment instruments will diverge significantly from the profile specified for teaching and learning. The new curriculum should include sections giving examples of questions which could be used by teachers and examiners to measure the progress of pupils towards mastery of the desired competencies. Learning and assessment should always be seen as complementary parts of the same process.«

These points should be borne in mind for future curriculum development which must be based on the new syllabuses produced by the Malawi Institute of Education (MIE) and shortly to be introduced into the schools. These syllabuses show from their columns for»suggested assessments«that Somerset's points have so far been ignored. There is a danger that examinations based on the new syllabuses may prove once again a restrictive influence unless some further test development is begun well before pupils in Standard 5-8 begun to be taught the new material in 1996 - 99...

Science and Girls

Whilst all boys study Science, girls are given the option of studying either Home Economics or Needle Craft instead. Girls are in any case under one third of pupils entered for the PSLCE. In 1992, of 106,073 candidates, 34,368 or 32.4 per cent were girls. Of these girls 11,408 did Home Economics (3,061) or Needle Craft (8,347) being 33.2 per cent of girls and 10.8 per cent of all pupils. Those taking Home Economics are examined on Health Education as part of it, but those taking Needle Craft are not examined on it at all. There is thus some minimal element of Science in Home Economics but none at all in Needle Craft. Girls are already at an educational disadvantage in Malawi as the low proportion enrolled in Standard 8 shows: social and economic pressures force them to drop out of school early. They also perform less well than boys in all subjects of the PSLCE. Lack of Science education will further handicap that minority which succeeds in going on to secondary school where Science is compulsory. The MOEC has considered abolishing this practice of making Science optional for girls, but it seems unlikely that this will be done until the new curriculum takes effect for Standard 5 in 1996...

Nature of Questions Set in PSLCE Science

The Science questions in the paper set in July 1992 have been analysed... The extent to which school science apparatus is shown in them has been noted, as has the occurrence of experiments or procedures described verbally which could have been pictured. It should be noted that all the apparatus shown is simple and made from cheap and easily obtainable materials (except batteries and bulbs). All could be used by a teacher to demonstrate or done by pupils themselves, even at home. In this respect, the setters have observed the 1989 - 91 phase of test development and based questions on material shown in the teachers' guides and pupils' books which should be within the capacity of any teacher to demonstrate in the classroom...

Seventeen questions were set, nearly all having sub-questions with marks separately apportioned. Of these 17 questions, 6 were on biological topics which do not require apparatus other than the organisms studied. Of the remaining 11,6 showed apparatus and an activity or procedure to be done with it. Of the other 5 questions where a verbal description was used instead of a drawing, it would have been possible to use an illustration instead. Indeed, illustrations have been used for some of these topics in the 1991 paper or in the specimen paper.

Of abilities tested, 10 questions seem to test recall only. Two questions which look as if they test more than this by requiring pupils to reach conclusions from observation of the results of experiments (Q5 on water pressure and Q17 on permeation of soils by water) are in fact exact copies of the experiments in the teachers' guides and could be answerable by recall alone. Of the remaining 7 questions, 5 do appear to test application of principle in that they show or describe procedures or experiments which are slightly different from those in the teaching materials, but which can be understood and interpreted by use of the appropriate principle. Two questions appear to test comprehension or interpretation.

An allocation of marks to abilities tested shows that out of 60 marks for the Science section of the paper, 35 were given to recall sub-questions, 5 to comprehension and 20 to application of knowledge or principle. This division (which is of course subjective) does not achieve the target of 50 per cent of marks for recall questions and 50 for more than recall... although it would if Q17 had been adapted properly.

It seems reasonable to conclude that the 1992 paper tried to test the specified range of abilities. In terms of content, there were more marks for biological questions (20) than is intended by the specification grid (15). It is again a subjective judgement, but there seems a small tendency to regress to the pre-1991 style of questioning with questions of the»name this...«type. This type of question was never actually abolished, which is a pity since its continuance may encourage a regression to more recall questions...

Support for Testing Higher Level Objectives

It is to be hoped that the above account demonstrates that MANEB's test development policy is to make examination questions support higher level objectives as far as possible. The only limitations are the syllabuses and teaching materials, which in the case of Science are not a serious obstacle, and the need to maintain some continuity with the old form of questioning by retaining some items to test recall. The effect of recent changes of the emphasis of questions on the ways in which teachers use this material or adjust their teaching approach is of course not known, although it might be possible to do some research on the topic. In order to exploit the changes in question style more, MANEB and MOEC ought to make more use of examination data to draw the attention of teachers to the real point of some of the questions and to appropriate ways of teaching for them. This technique has been used in Kenya with apparent success (Somerset, 1987). Unless this is done, the support which the examinations are trying to give to the higher level objectives remains passive. The idea of reporting examination data to teachers and organizing local seminars to discuss it has been raised here, mainly by the World Bank (1989) but seems to have provoked no reaction from MANEB and MOEC.

What Pedagogic Approach to School Science is Reflected in Questions?

From the above, it may be evident that recent test development has tried to encourage an approach to Science which is based on the use and observation of real materials and apparatus, on simple experiments to be performed, and on making conclusions from experiments. A contrary approach before 1991 tended to emphasise naming and definition, the acceptance of principles as facts with no need for experimental demonstration, and minimal use of any inductive or deductive reasoning. This latter approach, although still detectable at times, has been discouraged by the recent reforms. It is now in the teachers' best interests in terms of examination success to ensure that pupils have at least seen the demonstrations and experiments in the teachers' guides, and preferably also those in past question papers. Likewise, pupils should be made aware of the need to predict the results of experiments and explain them, using appropriate principles. If the general view that learning is more successful through»interaction with objects«(Piaget) is accepted, pupils ought to do better as a result of being taught via concrete demonstration and preferably via direct participation. But it is necessary to repeat here that the support of the examinations for this approach to teaching is at best passive. The material and attitudinal obstacles to teachers adopting it in practice are well known (Siege and Voss-Lengnik, 1990) and it is obvious that intervention of some kind will be needed to influence teachers more radically.

It may be thought that the concept of Science promoted by the PSLC syllabus, teaching materials and examination alike is a very limited one, even allowing for the scarcity of resources in Malawi. There is little to encourage pupils to devise experiments of their own or to deduce principles from observation. There is no social context for Science, which must seem a baffling activity to pupils in a rural society. There is no acquaintance with the discoveries of great scientists, which might convey human interest as well as some appreciation of scientific method by empathy. Nor is the use of Science made clear, as it easily might be in relating, say, discoveries in medicine to daily life. It is not the fault of the examinations alone, but a very isolated and mechanical concept of Science is being promoted in the Malawian curriculum, both old and new.

4.5. Learning Competencies For All. Essential and Desirable Learning Competencies for Standards 4, 5 and 6 (Abstracts)

Towards a holistic approach to examination reform

Prepared by:

Mauritius Examinations Syndicate
in collaboration with
Ministry of Education and Science,
Mauritius Institute of Education
and ***Mahatma Gandhi Institute.***

LEARNING COMPETENCIES: *AN INTRODUCTION*

'A nation's children are its greatest resource. In only a few decades the prosperity and quality of life of ail nations will be determined By to-day's children...'

Cited in: *Master Plan for Education for the year 2000*

Why the Learning Competency Project?

The Philosophical and Sociological Background

In an age where illiteracy has become a major handicap, every nation owes it to her children to make sure that all of them irrespective of class and creed have access to at least the basic education that will enable them to become literate and functional citizens. This is rightly now the international trend.

Mauritius which has always given due importance and status to education has followed suit: universal free education is available at the primary, secondary and tertiary levels. Yet a closer look at the real situation shows that it is not yet time for us to rest on our laurels.

> *"At present while 99% of our children enter standard I, only a little more than 70% of the cohort pass the CPE examination. One quarter of our children leave school at that point without basic education"*

acknowledges Honourable A Parsuramen, Minister of Education and Science. In other words nearly 30% of our children leave school, after six years, illiterate, innumerate and labelled as failures. This wastage of human potential and of economic and human resources has to be tackled urgently. Again to quote the Minister of Education and Science:

> *"Mauritius needs the talents of all its people. We cannot afford to ignore the potential of large groups of our citizens, nor indeed would it be socially just for us to do so."*

Having achieved the first goal of primary education, we have now a social and moral obligation to improve the quality of education to ensure that *all* our children irrespective of social, regional, economic background are given *quality education* and helped to develop their abilities and the basic life skills and competencies necessary to function in the present society.

The Learning Competency Project was initiated by the MES with precisely these objectives in view:

(1) to identify the basic skills and learning competencies needed by children to become literate functional citizens;

(2) to provide direction for curriculum developers to develop competency-based instructional materials;

(3) to provide broad guidelines to teachers to adapt teaching learning strategies to the learning competencies;

(4) to redesign the examination papers in terms of the learning competencies;

(5) to provide a basis for certifying pupils' achievement.

Pedagogical Basis

While it is necessary and desirable to get the majority of pupils to pass the CPE examination, one major pedagogical concern is to improve the performance of pupils to bring them all up to a reasonable attainment level - to make them really literate and numerate.

By setting clearer and step-by-step attainment targets (expressed in terms of essential and desirable learning competencies), this document proposes an in-built mechanism for more effective teaching. It gives a clearer sense of direction in the day-to-day teaching so that teachers may know step-by-step what they are expected to achieve and they can discover/diagnose at what step a child is facing difficulties.

The document also provides the basis for *target-related assessment* which can take various forms:

(a) diagnostic to identify pupils' difficulties;
(b) formative for improvement;
(c) summative for certification.

What are Essential and Desirable Competencies?

Essential Learning Competencies (ELC) represent the levels of learning in a particular subject comprising such basic knowledge, understanding, skills, abilities, interests, attitudes and values which are considered minimum but essential for all students to acquire at the end of a particular standard or stage. They can be regarded as attainment targets below which learning is not sustainable. In other words, they are the 'minimum vital'.

However, children do not all have the same potential and while it is necessary to bring all children up to the agreed-upon essential level of learning, children with higher abilities must be catered for and attainment levels must be pitched higher to meet their learning needs. Therefore, higher order competencies involving more complex mental processes and/or learning content have been laid down and termed **Desirable Learning Competencies** (DLC). The ELC are a must for *all* students while DLC are optional though desirable, for every one to exercise his higher order mental faculties and can thus be used to discriminate amongst high flyers.

For examination purposes a judicious combination of the two types of competencies will be used. The ELC are more suitable for certification while DLC are more appropriate for ranking purposes.

The theoretical framework of the Learning Competency Model may be depicted as In the figure on page 3.

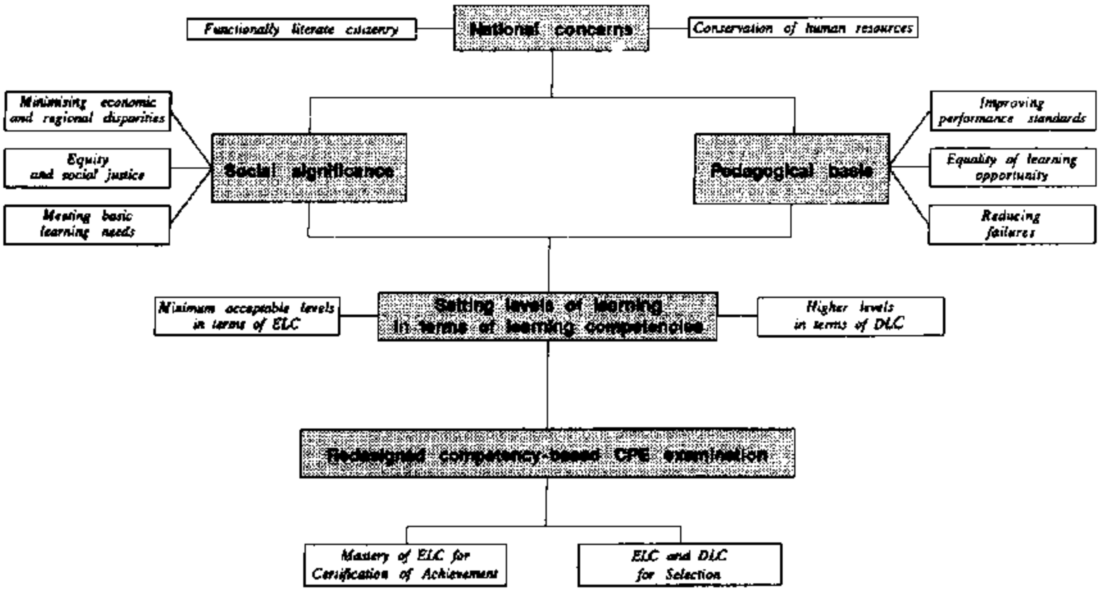

Theoretical Framework for teaming Competencies

Methodology used to formulate Learning Competencies

The **first step** in the project was to analyse the present syllabuses and question papers and to study the international literature on competency-based teaching and testing.

Different models have been used in different countries. *Basic Skills Testing Programmes* are used in Australia where the skills tested include two aspects of literacy (Reading and Language) and three aspects of Mathematics (Number, Measurement and Space) and where the scores represent growth along a continuum. In some Australian states, profiles have been developed within subject areas and each component is further divided into levels of competence representing standards of performance.

England and Hong Kong have specified *“Attainment Targets”* with criteria set at a number of different levels rather than pass/fail at only one level. The USA have *Minimum Competency Testing* and India developed the *Minimum Levels of Learning.*

The Models may vary from country to country but they all acknowledge the impossibility of measuring competence, as such. We can only define objectives and measure the *behavioural outcomes* of these objectives. When we teach a lesson to develop a child’s ability to understand - we cannot examine and certify whether the thought processes involved in understanding were developed and used in that particular lesson, we can only assess his level of understanding by the answers he gives to the questions we ask and depending on his answers - which are measurable - we can decide about his level of understanding. Hence the care with which tests (class tests as well as external ones) should be constructed to ensure that they measure what they are supposed to measure.

The MES chose a taxonomic model which states learning objectives in terms of:

Knowledge, Understanding and Application for content subjects and Knowledge, Comprehension, Expression (which includes Application) in the case of languages.

This model is close to the Indian Experience but different and more adapted to the Mauritian context.

The **second step** in the project was to break down each subject into its major skills and the competencies implied in language subjects or content areas and the corresponding competencies. Thus Learning Competencies were laid down for each subject examined at CPE level giving due importance to certain skills presently neglected and overlooked which are yet essential components of the subject, e.g. the oral skills in languages and the psychomotor skills in EVS. We have also considered some of the non-cognitive elements like attitudes, values that are important not only for the development of competencies in individual subjects but also for the healthy growth and integration of the child in society.

The **third step** was the categorisation of the Learning Competencies into the two groups: ***Essential and Desirable.*** *Essential Learning Competencies* constitute the levels of achievement to be developed in *all* children at the end of the primary stage while *Desirable Learning Competencies* set the attainment levels for children with a *higher ability.*

Strategy for formulating Learning Competencies

To develop the lists of Learning Competencies, the MES adopted a *participative* strategy.

Subject working groups comprising curriculum developers, chief examiners, inspectors, head teachers, deputy head teachers, practising teachers and research officers were constituted to work out the Learning Competencies in each subject.

A Steering Committee was also set up to monitor the progress of the panels.

These were the different stages in the development of the project:

(a) *August to November 1991*

After a careful analysis of the prescribed textbooks, of question papers and of relevant documents, the subject working groups, under the guidance of Prof Pritam Singh laid down the competencies for each subject. This material was regularly reviewed by the Research and Development Section of the MES in accordance with the observations of the Steering Committee.

(b) *10th to 16th December 1991*

The first draft of Learning Competencies was prevalidated by about 250 practising teachers who had been sent the list of competencies in advance. Advantage was taken of their experience (i) to identify the competencies to be deleted, modified or added and (ii) to identify those competencies that can be acquired only by bright students and are not essential. Such competencies - named *Desirable Learning Competencies* are listed in **blue** in the document.

(c) *December 1991*

To ensure further judgemental validity the modified draft of Learning Competencies was submitted for critical and thorough review by senior experts from NCERT, New Delhi, who have experience in this field.

(d) *22 April 1992: National Seminar on Reforms at CPE Level*

The seminar on proposed reforms at CPE level provided some reflections and observations which were incorporated.

(e) *July 1992*

Final Draft.

The following criteria were applied to judge whether a Learning Competency formulated is acceptable for inclusion in the list.

Firstly, it must be *sustainable* in the sense that it represents achievement which can sustain learning from one unit to the other and from one standard to the next so as students can derive benefit from instruction for further learning.

Secondly, it must be *communicable* which means that the levels of learning stated in the document in the form of learning competencies form a common basis for the teachers, evaluators, inspectors and administrators. Each Learning Competency has a common pattern of statement representing two dimensions, namely the content element and the ability aspect, to facilitate communication.

Thirdly, an attempt was also made to provide *learning continuity* in each topic and sequenced in such a way that clusters of competencies of a unit are built upon the clusters of competencies of the preceding unit. An attempt was also made to develop a continuum of learning competencies as far as possible across standards 4 to 6 besides the learning continuum established within each standard.

Fourthly, the criterion of *functionality* was used. It means that teachers are capable of developing these competencies in teaching. Learning Competencies are stated at a proper level of generality, neither too global to be measurable nor so atomistic as to be unwieldy.

Fifthly, unless a learning competency was *measurable, i.e evaluable* it was not to be listed. A learning competency must provide a well defined goal, where a statement in terms of specific learning outcome is necessary, to make it testable.

Sixthly, *achievability* was the final criterion which means that under the given conditions all learning competencies are attainable. They are in accordance with the cognitive development and the maturity levels of students.

Why the hierarchical presentation?

A look at the document shows that the competencies are presented in a hierarchical way both across standards and more importantly within each standard. The reason is that learning objectives have an intrinsic hierarchy

knowledge → understanding → application

which is reflected in both content and competencies as a result of which we have a hierarchy of competencies and a hierarchy of content. Logically we cannot expect a child to multiply till he understands the principle of addition; likewise we cannot expect him to write a sentence correctly in a particular language till he has mastered certain syntactical and grammatical structures of the language and has the required vocabulary. This hierarchical nature of the competencies listed has a direct implication for teaching: given their hierarchical nature, a competency cannot be taught unless the preceding one has been acquired. Teachers must therefore make sure - not necessarily through formal tests - that the pupils have acquired the prerequisite competency before they teach the next one.

To Conclude

The present document is not a teaching syllabus nor an examination syllabus. Its main focus is not on the content elements of the different subjects but on the *acquisition of the competencies.* Although there are certain subjects like EVS and Maths which are more content oriented than others and all subjects have a content component, in the present document content is above all a tool for the development of the identified competencies.

This explains the use of **action words** to define all the competencies to be taught. At the. end at a particular standard we expect the child to be able to *recall, decode, analyse, interpret etc...* It is immaterial whether the teacher uses passage 1 or 2, topic 1 or 2 to achieve this, as long as the child develops the required competency and reaches the level of *knowledge, understanding* and *application* appropriate for his age. The success of the Learning

Competency Project rests on *competency-based teaching and testing.*

The Learning Competency Project is part of a continuing search for standards in education. As such it relates to a particular time frame: as the demands of society change, the acceptable levels of learning and areas of essential learning have to be reviewed and updated. As performance standard goes up with improved instruction and better learning, the list of ELC also changes and some of the present DLC become ELC.

Notes

1. Learning Competencies have been formulated for Standards 4,5 and 6 for all subjects examined at CPE level. The prerequisites for Standard 4 have also been listed.

2. **Code used for the Learning Competencies**

The *first* figure represents the skill/topic referred to, the *second* refers to the standard and the *third to* the competency to be developed.

Thus in the code **2.4.6** for English, **2** represents the second skill listed i.e. *speaking;* **4**- *Standard 4* and 6 **-** the *sixth competency* to be developed.

Topics	Prerequisites	Standard 4	Standard 5	Standard 6
				6.6.12 *Acquire and practice good health and safety habits.*
				6.6.13 Give reasons for taking a balanced diet.
7. Air		7.4.1 Show the presence of air in the environment.	7.5.1 State that air is a mixture of many gases such as oxygen, carbon dioxide and nitrogen.	
		7.4.2. Demonstrate that soil contains air.	7.5.2 Demonstrate that air is necessary for burning.	
		7.4.3 Demonstrate that water contains air.	7.5.3 Name items which easily catch fire.	
		7.4.4 Name some light objects which can float in the air.	7.5.4 List some of the ways to extinguish fires.	
		7.4.5 Conclude that air is present all round us even in ‘empty’ space.	7.5.5 List certain precautions to be taken to prevent fires.	
		7.4.6 Demonstrate that air exerts pressure.	7.5.6 Explain three causes of air pollution.	
			7.5.7 State that air is essential for living things.	

Topics	Prerequisites	Standard 4	Standard 5	Standard 6
			7.5.8 Infer that air exists around us.	
			7.5.9 Demonstrate that air expands on heating and contracts on cooling.	
			7.5.10 Give three reasons why air pollution is dangerous.	
			7.5.11 Infer that air exerts pressure in all directions.	
8. Weather	8.1 Describe prevailing weather (from pictures).	8.4.1 Observe and record weather characteristics.	8.5.1 State that wind is air in motion.	
	8.2 Interpret a simple weather calendar.	8.4.2 Name and recognise the instruments used to measure temperature, rainfall and wind direction.	8.5.2 Show that wind has speed and direction.	
	8.3 Record the weather using symbols in a calendar for a week.	8.4.3 Name the winter months and summer months.	8.5.3 Read the temperature from a thermometer.	
	8.4 Record the weather in a weekly calendar, using symbols.	8.4.4 Mention the weather characteristics of summer and of winter months.	8.5.4 Read and recognise a map with isotherm/isobar/isohyet.	
		8.4.5 Name the prevailing winds.	8.5.5 List the three main types of rainfall.	
		8.4.6 Explain the importance of rain.	8.5.6 Measure rainfall using a simple rain gauge.	
		8.4.7 *Develop an interest in weather reports on radio and television.*	8.5.7 Make models of anemometers and windvanes in small groups.	
		8.4.8 *Develop an awareness that out weather is influenced by cyclones in*	8.5.8 Differentiate between land breeze and sea breeze.	

Topics	Prerequisites	Standard 4	Standard 5	Standard 6
		summer.		
			8.5.9 Interpret isotherm/isobar/isohyet maps.	
			8.5.10 Differentiate between weather associated with cyclones and anticyclones.	
			8.5.11 Interpret cyclone bulletin.	
			8.5.12 Explain how rainfall distribution in Mauritius is related to relief, seasons and the South East trade winds.	
			8.5.13 Interpret a rainfall histogram.	

4.6. Science in the National Curriculum - Attainment target 9: Earth and Atmosphere

Knowledge and understanding of science, communication and the applications and implications of science (ATs2-17)

Pupils should develop their knowledge and understanding of the structure and main features of the Earth, the atmosphere and their changes over time.

LEVEL **STATEMENTS OF ATTAINMENT**

Pupils should:

1
- know that there is a variety of weather conditions.
- be able to describe changes in the weather.

2
- know that there are patterns in the weather which are related to seasonal changes.
- know that the weather has a powerful effect on people's lives.
- be able to record the weather over a period of time, in words, drawings and charts or other forms of communication.
- be able to sort natural materials into broad groups according to observable features.

3
- be able to describe from their observations some of the effects of weathering on buildings and on the landscape.
- know that air is all around us.
- understand how weathering of rocks leads to the formation of different types of soil.
- be able to give an account of an investigation of some natural material (rock or soil).
- be able to understand and interpret common meteorological symbols as used in the media.

4
- be able to measure temperature, rainfall, wind speed and direction; be able to explain that wind is air in motion.

• know that climate determines the success of agriculture and understand the impact of occasional catastrophic events.

5 • know that landscapes are formed by a number of agents including Earth movements, weathering, erosion and deposition, and that these act over different time scales.
• be able to explain how earthquakes and volcanoes are associated with the formation of landforms.
• be able to explain the water cycle.

6 • be able to explain the processes by which igneous, sedimentary and metamorphic rocks were formed and are recycled.
• be able to describe how the properties of minerals and rocks are related to their uses as raw materials.
• understand how different airstreams give different weather.

7 • be able to state qualitatively the relationship between pressure and winds.
• be able to recognise patterns in the distribution of the Earth's major surface features (continents, mountain belts, areas of very old rock, oceans, ocean basins, trenches and ridges) and zones of active crust (earthquakes and volcanoes).

8 • understand that geological time scales are very long compared with human and historical time scales, and have a general knowledge of how geological time scales can be measured.
• be able to interpret evidence of modes of formation and deformation of rocks.

9 • be able to use appropriate scientific ideas to explain how changes in the atmosphere cause various weather phenomena.
• be able to describe in simple terms the layered structure of the inner Earth, and explain the evidence that favours such a model.

10 • understand the theory of plate tectonics and use it to explain some major geological features on the Earth's surface.
• understand how plate tectonic theory brought about a revolution in our understanding of the way the outer part of the solid Earth works.

Source: Department of Education and Science (1991)
Science in the National Curriculum. HMSO. London.

4.7. Boat Building (The Properties, Classification and Structure of Materials) - Worksheet

Statement of attainment

Pupils should:

3/3a be able to link the use of common materials to their simple properties.

Resources

• Copies of the worksheet for this activity

Acceptable responses

A choice of material for each part of the model should be made. The actual materials chosen are less important than the reasons given for choosing them. In total, at least two different properties of materials should be named or described.

Suitable properties would include:

strength	hardness
weight (density)	flexibility
elasticity	non-absorbency

The correct terms need not be used; it is sufficient to convey the meaning of the property (for example, ‘it won’t tear’ or ‘it would be easy to cut’).

Boat Building

Example answers only – others are possible

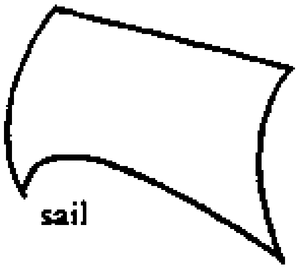

sail

I would use paper / nylon fabric / foil

because it is strong

and catches the wind

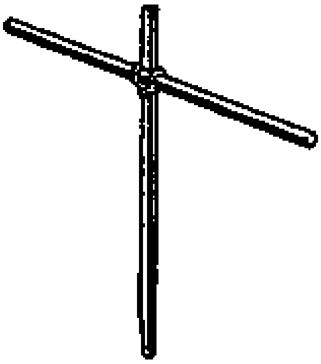

mast

I would use rubber / card / wood

because it is stiff

and light

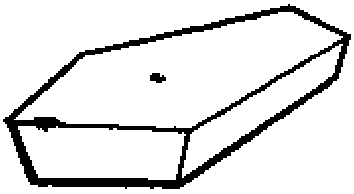

hull

I would use wood / polystyrene / plasticine

because it is light or floats

and easy to cut

Materials - Levels 2-5

Boat Building

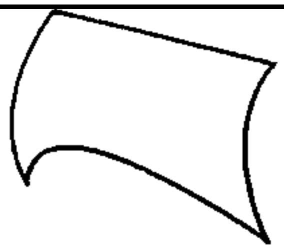 sail	I would use because it is and	paper/nylon fabric/foil ______________________ ______________________
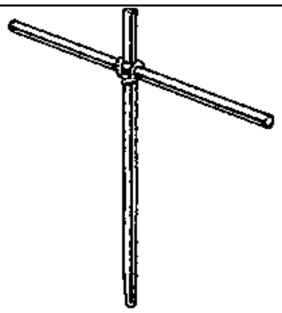 mast	I would use because it is and	rubber/card/wood ______________________ ______________________
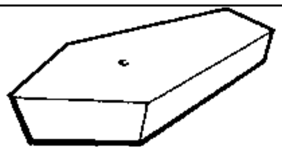 hull	I would use because it is and	wood/polystyrene/plasticine ______________________ ______________________

Code 4285 09 4

DSE in Brief

The German Foundation for International Development (DSE) is an institution which provides a forum for development policy dialogue and the initial and advanced training of specialists and executive personnel from developing and transitional countries. In addition, it supports German experts preparing themselves for their assignments in developing countries and maintains the Federal Republic of Germany's largest centre for documentation and information on development cooperation issues.

Conferences, meetings, seminars and training courses support projects which serve economic and social development, thus contributing to an effective, sustainable and wide-ranging development process.

The DSE cooperates with partners at home and abroad. A considerable number of the programmes take place in the developing countries, and the rest in Germany. Since 1960 the DSE has given advanced professional training to more than 120,000 decision-makers, specialists and executive personnel from over 150 countries. Through its dialogue and training events the DSE currently reaches more than 10,000 participants annually.

Founded in 1959, the DSE contributes to development cooperation on the basis of the guidelines of the German Federal Government's development policy. The institutional donor is the Federal Ministry for Economic Cooperation and Development (BMZ). Some of the DSE programmes are, however, financed by other donors (e.g. other Federal ministries, the Federal Länder, the European Union).

Also, the Federal Länder of Baden-Württemberg, Bavaria, Berlin, North Rhine-Westphalia and Saxony have made conference and training centres available. Since its establishment, the DSE has been jointly financed by the Federation and the Länder. This finds expression in the decentralized structure of the German Foundation with its specialized departments (Centres) and conference centres in a number of Federal Länder.

"Effective Teaching"

A 5-day-workshop for teachers and trainers in professional and technical vocational skills training

This is a born teacher!
Did you ever come across this statement? True, some seem to be naturally good at their job: not only are they liked and their courses favoured, they can almost always attract their students' attention. How do they do it? you might have wondered already. To tell you the truth right away – it is neither born talent nor charm alone!

What makes a good lesson, what stimulates thinking, what helps noting and remembering information, what grips the attention of an audience during a lecture – all this will be part of the workshop "Effective Teaching". Catering for professional and technical skills teachers and trainers, the seminar aims to improve teaching and training skills and to equip participants with the needed know-how. Topics covered are:

- Learning theory
- Learning objectives and lesson planning
- Teaching and training methods
- Visual teaching aids
- Methods of control and evaluation

Since one should practise what one preaches, a lot of exercises will be incorporated into the 5-day-schedule: learning-by-doing-sessions will follow lectures and debates. Some parts of the seminar will be recorded on video to allow for an analysis of each participant's teaching performance. Out of this, recommendations for improvement will be worked out together.

By the end of the seminar you will hopefully be able to apply as much of the theoretical knowledge and practical experience in your daily teaching as possible. Thus, not only you will benefit but your students as well: As much as you will enjoy teaching, as much they will enjoy learning from you!

Number of participants: 8 to 10

Seminar schedule

Effective Teaching

Day 1

Unit 1:	Welcome	Introduction of lecturer, participants and topic
Unit 2:	How human beings learn	Introduction of theory and discussion (Part 1)
Task 1:	Mini-Lesson	Preparing a presentation
		Presenting the presentations (presentations will be videotaped) and feedback
Unit 2:	How human beings learn	(Part 2)

Day 2

Repetition:		Last day's lecture
Unit 3:	Learning objectives	Introduction of theory and exercise
Unit 4:	Teaching methods	Introduction of theory and exercise
To Task 1:	Mini-Lessons	Watching the videos of the presentations
Unit 5:	The lesson	Introduction of theory and discussion
Unit 6:	The 4-Step-Method	Introduction of theory and discussion
Evaluation:		Feedback on the first two days of training

Day 3

Repetition:		Last day's lectures
Unit 7:	Questions in lessons	Introduction of theory and exercise
Unit 8:	The lecture	Introduction of theory and exercise
Unit 9:	Visualization	Introduction of theory
Task 2:	Visual aids	Preparing a visual aid and presenting it
Summary/Outlook		Handing out of handouts/Introducing task 3

Day 4

Task 3:	Model-Lesson	Preparing a presentation
		Presenting the presentations (presentations will be videotaped) Individual feedback

Day 5

Task 3:	Model-Lesson	Continuation of presentations (videotaping) Individual feedback
Unit 10:	Evaluation and control	Introduction of theory and discussion
		Assessment of seminar
Closing		Handing over of certificates

Schedule of the days

start	8.00 am
1. break	according to progress of sessions
lunch	12.00 am to 1.00 pm
2. break	according to progress of sessions
end	5.00 pm

Tasks

Task 1:	Prepare a mini-lesson. Choose out of given topics. Duration: 6 +/- 2 minutes
Task 2:	Prepare a visual aid (media will be assigned) to support a lecture.
Task 3:	Prepare a model-lesson. Choose topic from your field of expertise. Apply what you have learned during the seminar. Duration: 20 +/- 5 minutes

Effective Teaching, Day 1 - 1

No.	Title	Content/Activity	Material	Time
1	Introduction	Registration, putting on name tags Welcome of pax Introduction facilitator	Stickers, markers, registration form Prepared meta-cards	8.00 – 8.30
2	**Partner interview:** Introduction	Each participant draws one piece of postcard, finds partner & asks for: - name - what he/she likes about teaching - what he/she dislikes about teaching - expectations re E.T. seminar to be put on four meta-cards and presented to plenary one by one	5 pairs of postcards diagonally cut in halves; meta-cards, markers manila paper, glue/masking tape	8.30 – 9.00
3	Introduction	Facilitator gives brief feedback on expectations; Outlines objectives, methods, content & schedule of training;	Flipchart 10 copies seminar schedule	9.00 – 9.15
4	Lecture/Discussion “How human beings learn” – part 1	Input on: - Learning – a definition - Different types of learning - Different ways of learning of human beings - Different ways of learning of animals - Learning theory - The three steps of human learning	Transparencies Laminated meta-cards	9.15 – 10.00

	Break			10.00 – 10.15

Effective Teaching, Day 1 - 2

5	**Game** **Exercise**	Option 1: Pax form circle, person who throws ball to another pax says word; last letter of word must be first letter of next word – related to factors influencing memory performance Option 2: Pax work in pairs and find example for learning material from their field of teaching suitable for each of the 9 ways of human learning; results shared in plenary	Softball Exercise sheets "Different ways of human learning"	10.15 – 10.30 20 – 30 minutes
6	Lecture/Discussion "How human beings learn" – part 2	Recap first input; further input on: - The 3 components of the memory - The sequence of learning - How to prepare information for storage - How to remember information - How learning is enjoyable	Transparencies	10.30 – 11.15
7	**Individual work** Mini Lesson	Introducing task 1 "Mini lesson" - audience: aliens - time presentation: 5 – 7 minutes - aim: student can use/understand item - time preparing: 1 hour Then pax work on their own; if approached by pax, allow only restricted use of media	Cord, choice of prepared cards representing items (tools, daily equipment), pegs Band paper, pens/pencils, markers	11.15 – 12.00

	Lunch			12.00 – 13.00

Effective Teaching, Day 1 - 3

8	Continuation of **Individual work** Mini Lesson	Same as # 7	Same as # 7	13.00 – 13.15
9	Introduction Mini Lesson	Drawing of lots to establish sequence of pres. Introducing feedback method Kiss – Kick – Kiss Introducing procedure, reason for video taping Reminder of time frame, rules	Laminated meta-cards with feedback steps Prepared lots 1 – 10 Paper, pencil	13.15 – 13.30
10	**Presentations** Mini Lesson	Presentations by pax: - presentation/video taping of presentation - feedback by presentor - feedback by other pax - feedback by facilitator Time per pax: 15 – 30 minutes approximately	Camera, tripod, extension cord, stop watch, 1 – 2 tapes	13.30 – 13.45 13.45 – 14.05 14.05 – 14.25 14.25 – 14.50 14.50 – 15.10

	Break			15.10 – 15.25

Effective Teaching, Day 1 - 4

11	**Presentations** Mini Lesson	Same as # 10	Same as # 10	15.25 – 15.45 15.45 – 16.05 16.05 – 16.20 16.20 – 16.40 16.40 – 16.55
12	Summary Feedback/Mini Lesson	Facilitator summarizes major learning through presentations; outlines three areas to which feedback was given; introduces three major areas of competence of a teacher/trainer	Transparency	16.55 – 17.05
13	**Feedback**	Pax indicate how satisfied they are with day 1 by marking on the sun rays	Evaluation sheet “Shining sun”	17.05 – 17.10

Effective Teaching – Alternatives for Day 1 schedule

No.	Title	Content/Activity	Material	Time

Effective Teaching, Day 2 - 1

No.	Title	Content/Activity	Material	Time
1	**Review**	Pax choose one colored envelope and try to answer/explain question/statement they find inside; other pax may help or facilitator	10 envelopes, 3 different colors; 10 statements concerning input of day 1	8.00 – 8.45
2	Lecture/Discussion “Learning Objectives”	Input on: - The importance of learning objectives - Implications for objectives - Taxonomy of objectives Explaining by example “Learning how to ride a bike”	Transparencies Laminated meta-cards Pin-board, pins or whiteboard, masking tape	8.45 – 9.30
3	**Group work** Formulating objectives	Pax are grouped according to 3 colors of envelopes and asked to work out objectives for “Learning how to drive a car” for one area each: - psychomotor area - cognitive area - affective area	Meta-cards, markers	9.30 – 10.00

	Break			10.00 – 10.15

Effective Teaching, Day 2 - 2

4	**Presentations** Formulating objectives	Presentation of results of each group to plenary; corrections or comments by pax/facilitator; Facilitator summarizes importance of 3 areas & points out specific feature of each area	Pin-board, pins/whiteboard, masking tape	10.15 – 10.45
5	Lecture/Discussion "Teaching Methods"	Input on: - Definition - The right choice - Didactical arrangements Collecting methods known & used by pax on whiteboard (10 – 15 methods)	Transparencies Whiteboard, markers	10.45 – 11.00
6	**Group work** Teaching Methods	Pax are divided into 2 groups by fitting cut-up postcard segments together, then working on - advantages of methods collected - disadvantages of methods collected per group writing results of discussion on meta-cards; cards have to be divided equally among group members for presentation	2 postcards, cut-up into 5 strips each meta-cards, 2 colors, markers	11.00 – 11.40
7	**Pro – Contra Debate** Teaching Methods	Each method is presented to plenary in form of a pro – contra debate with - advantages - disadvantages - further comments/arguments If needed, facilitator intervenes, corrects, summarizes to facilitate flow of debate, gives also inputs on possible use of methods	Manila paper, glue/masking tape, marker	11.40 – 12.00

	Lunch			12.00 – 13.00

Effective Teaching, Day 2 - 3

8	**Energizer** Ping-Pong-Pang	Pax form circle & conduct game		13.00 – 13.15
9	Continuation of **Pro – Contra Debate** Teaching Methods	Same as # 7 Facilitator summarizes debate; repeats importance of criteria for choice of method	Same as # 7	13.15 – 14.00
10	Video watching Mini Lesson	Facilitator explains reasons for feeling awkward when seeing oneself on tv; Each mini lesson is viewed; facilitator may pause tape to point out body language/mistakes committed during presentation; each pax is asked if they may want to share further observations of own presentation with group	Video camera, tv monitor, tapes with recorded mini lessons, extension cord, linking cord camera – tv	14.00 – 15.30

	Break			15.30 – 15.45

Effective Teaching, Day 2 - 4

11	**Energizer**	Facilitator conducts stretching exercises with group		15.45 – 15.50
12	Lecture/Discussion “The Lesson”	Facilitator summarizes learning from watching mini lessons & develops basic structure of a lesson on the observed examples of mini lessons	Laminated meta-cards, pin-board, pins/whiteboard, masking tape	15.50 – 16.20
13	Lecture/Discussion “The 4-step method”	Facilitator gives brief background info on dual training system in Germany & application of 4-step method in context of skills training, then input on: - the 4 steps of the 4-step method Comparison to basic structure of lesson	Transparencies	16.20 – 16.40
14	**Feedback**	All sit in circle and give oral feedback by passing on the ball; Facilitator introduces task 3 “Model Lesson” and asks pax to think of a possible topic they may want to present	Ball	16.40 – 17.00

Effective Teaching – Alternatives for Day 2 schedule

No.	Title	Content/Activity	Material	Time

Effective Teaching, Day 3 - 1

No.	Title	Content/Activity	Material	Time
1	**Review** Matching exercise	10 different statements/questions & 43 answers are displayed on table. Each pax chooses one statement and searches for correct answers; facilitator checks choices and puts wrong answers back; Each pax elaborates on own statement & explains answers	10 statements/questions indicating number of answers, 43 meta-cards providing correct answers	8.00 – 9.00
2	Lecture/Discussion “Questions in Lessons”	Input on: - The exceptional quality of a teacher’s question - Different kinds of questions - Grade of difficulty - Technique of questioning	Transparencies	9.00 – 9.20
3	**Partner work** Formulating questions	Pax choose end of string to find partner, then read exercise sheet “Philippine Profile” & formulate 1 or 2 questions per category: - knowledge - comprehension - initiating thinking Results are shared/corrected in plenary	5 strings 10 copies exercise sheet band paper, pencils	9.20 – 10.00
4	**Brainstorming** Effect of questions	Pax do collective brainstorming on effect of good & bad questions which are collected on whiteboard; comparison with transparency	Whiteboard, markers Transparency	10.00 – 10.15

	Break			10.15 – 10.30

Effective Teaching, Day 3 - 2

5	**Role play** Lecture	Pax are divided into 2 groups by counting 1, 2, 1, 2…; each group has to prepare worst lecture they can think of presented in a role play (duration: 10 – 15 min) while other group observes & vice versa Processing of presentation, identifying elements which make lecture appear so bad	Choice of pax	10.30 – 11.30
6	Lecture/Discussion “The Lecture”	Input on: - The content & preparation of lectures - The structure of lectures - Comprehensibility of lectures By relating input to role plays whereever possible	Transparencies	11.30 – 12.00

	Lunch			12.00 – 13.00

Effective Teaching, Day 3 - 3

7	**Energizer** Pegs	All pax get 3 pegs each which they try to stick on other pax while avoiding getting any themselves; persons with most pegs has lost	30 cloth pegs	13.00 – 13.10
8	Discussion/Lecture “Visualization”	Input on: - Why visualization is so important - Some basic rules - Examples of design elements - Teaching and visualization	Transparencies	13.10 – 13.40
9	**Individual work** Visual aids	Pax choose 1 postcard out of display; on back is stated the media they will work with; each pax has to prepare a visual aid related to text of “Philippine Profile”	10 Postcards, different motives with choice of media written on back as listed below; manila paper, cartolina, meta-cards, whiteboard, overhead transparencies, black board, flipchart; markers, crayons, rulers, lettering stencil, set square, protractor, correction fluid, glue	13. 40 – 15.30

	Break			15.00 – 15.15

Effective Teaching, Day 3 - 4

10	**Evaluation** Visual aids gallery	All visual aids are displayed and visited one after other as if going through an art gallery; All pax briefly tell what was easy – difficult in executing work; Feedback on work by other pax, facilitator, pointing out ways of improving; Summarizing advantages – disadvantages of each media Brief summary of activity/importance of visualization	Boards/walls for display, masking tape, pins, clips	15.30 – 16.45
11	Outlook	Distribution of handouts Introducing next task “Model lesson” & outlook on procedure for next two days; Clarifying questions	10 copies of handout “Effective Teaching”	16.45 – 17.00

Effective Teaching – Alternatives for Day 3 schedule

No.	Title	Content/Activity	Material	Time

Effective Teaching, Day 4 – 1 + 2

No.	Title	Content/Activity	Material	Time
1	**Individual work** Model lesson	All pax work on preparing model lesson; facilitator puts task on whiteboard: - Prepare a model lesson - choose topic from your field of expertise - apply what you learned during seminar - state topic & objectives in writing - duration of presentation: 20 minutes +/- 5 Facilitator checks on work & progress of each pax in between; is available for giving advice throughout whole morning Shortly before lunch break sequence of presentations is established by drawing lots; pax may trade among each other before sequence is finalized	Sufficient stock of various media & working tools Prepared lots 1 – 10	8.00 – 12.00

	Break			10.15 – 10.30

	Lunch			12.00 – 13.00

Effective Teaching, Day 4 – 3 + 4

2	Introduction Model lesson	Facilitator repeats procedure of presentations & explains rules for feedback: - Presentation model lesson - Feedback of presenter - Feedback of 4 pax assigned prior to presentation - Feedback of facilitator - Pax are asked to use page on feedback in handout as displayed on overhead & briefly explained Assigning first 4 pax for giving feedback	Laminated cards feedback rules, camera, tripod, tapes, extension cord, stop watch Transparency Feedback sequence sheet	13.00 – 13.20
3	**Presentations** Model Lesson	Presentation of first pax, then processing presentation as explained in # 2 Checking for objectives to clarify whether achieved or not Assigning next 4 pax for feedback Time frame per pax inclusive set-up: 40 – 50 minutes; 4 – 5 presentations can be processed depending on flow	Choice of pax	13.20 – 14.05 14.05 – 14.50 15.05 – 16.00 16.00 – 16.45
4	Summary	Brief summary of today's activities Outlook on procedure for last day		16.45 – 17.00

	Break			14.50 – 15.05

Effective Teaching – Alternatives for Day 4 schedule

No.	Title	Content/Activity	Material	Time

Effective Teaching, Day 5 – 1 + 2

No.	Title	Content/Activity	Material	Time
1	**Presentations** Model Lesson	Facilitator welcomes pax & repeats procedure of presentations & explains rules for feedback: - Presentation model lesson - Feedback of presenter - Feedback of 4 pax assigned prior to presentation - Feedback of facilitator - Clarifying objectives Assigning 4 pax for giving feedback Presentations continue Time frame per pax inclusive set-up: 40 – 50 minutes; if not all can finish before lunch break, at least 2 pax should be left for afternoon instead of only 1 in order not to expose one individual	Laminated cards with feedback rules, feedback sequence sheet, Camera, tripod, extension cord, tapes, stop watch Choice of pax	8.00 – 8.20 8.20 – 9.00 9.05 – 9.50 10.05 – 11.00 11.00 – 11.45

	Break			9.50 – 10.05

	Lunch			11.45 – 13.00

Effective Teaching, Day 5 – 3 + 4

2	**Presentations** Model Lesson	Continuation of presentations same as # 1 Facilitator summarizes day's presentations; explains procedure with video tapes (transfer of recordings to vhs which is delivered to pax for later viewing)	Same as # 1	13.00 – 13.45 13.45 – 14.30 14.30 – 14.45
3	**Evaluation**	Brief input on: - The double function of control - Demands on control - The most important kinds of control Which are related to forms used during E.T. seminar Handing out of evaluation forms	10 copies evaluation form	15.00 – 15.20
4	Graduation/Closing	Handing over of certificates Closing of seminar	10 Certificates	15.20 – 15.40

	Break			14.45 – 15.00

Effective Teaching – Alternatives for Day 5 schedule

No.	Title	Content/Activity	Material	Time

Participant Reaction Evaluation Form

Use the scale 1 to 5 to express your reactions to the course based on the following statement: (Please circle only one choice for each statement.)

Strongly DISAGREE 1	Disagree 2	Neither 3	Agree 4	Strongly AGREE 5

Overall, I was satisfied with this course.	1	2	3	4	5
My knowledge and skills increased as a result of this course.	1	2	3	4	5
Knowledge and skills gained in this course are applicable to my work.	1	2	3	4	5
It was easy for me to understand the course content.	1	2	3	4	5
The methods used to deliver the course content were effective.	1	2	3	4	5
I enjoyed the parts with active involvement of the participants.	1	2	3	4	5
Group work and individual exercises stimulated my learning a lot.	1	2	3	4	5
Material for the participants was adequate.	1	2	3	4	5
The instructor explained the subject clearly.	1	2	3	4	5
The instructor answered my questions clearly.	1	2	3	4	5
The instructor was supportive and helpful.	1	2	3	4	5
I got good advice from other participants throughout the seminar.	1	2	3	4	5

What new things/changes can you apply to your job – immediately and after some time?

____

____

____

What parts of the seminar did you enjoy most? Why?

____

____

____

What parts of the seminar did you not enjoy? Why?

____

____

____

Further recommendation/comments not covered by this evaluation form:

____

____

(Continue on the back if you need more space!)

Thank you for your answers!

Deutscher Entwicklungsdienst

Effective Teaching

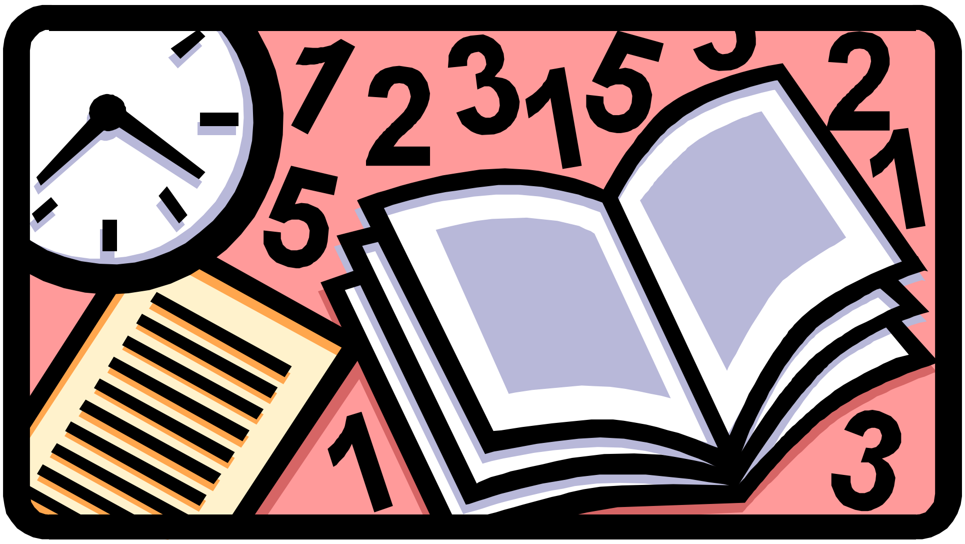

A seminar for teachers and trainers in professional and technical vocational skills training

Unit 1 Introduction

1. General remarks

This handout coming along with the workshop "Effective Teaching" is meant to provide general knowledge on the areas covered during the seminar. Since the training is participant-oriented, some of the topics may not be touched during the training, while others will be looked into with more depth. In any case, the handout cannot substitute the workshop since the training is, to a large extent, based on a "hands-on" approach: The main relevance of the training lies within the concrete workshop experience.

Nonetheless, this collection of basic knowledge can help you with your training: not only can you read in private and without stress about the various topics of the seminar, the handout can also be used like a tool-box from which you can pick the tools needed for your training. It hopefully provides you with general rules of teaching and inspires your planning of your instructions. Although technical knowledge and skills are the basic requirements for a trainer, they loose their value without skills in training and teaching. Thus, training skills are the transmission between trainer and student - they are one of the key factors for successful instruction.

As for content and design, this handout and the related workshop are based on the work of Konrad De Bortoli: A consultant of the German Development Service, ded, to TESDA Region VII, he conducted numerous workshops throughout the Philippines between 1999 and early 2001. All participants were provided with a handout which is the basis for this revised edition. It is hoped that the training continues to be as successful and empowering as it used to be then.

Cornelia Frettlöh

ded-consultant to the University of Southern Philippines Foundation, USPF
Salinas Drive, Lahug, Cebu City
April 2001

2. Content

Unit 2 How Human Beings Learn

1. Learning – a definition

Everybody talks about learning these days: parents, teachers, master craftsmen, bosses, professors, politicians. Very often they refer to the age of information which makes continuous, life-long learning a must. "Human beings learn as long as they live," is a true saying. We experience this every day: we are learning something new again and again, in the factory, at work, on vacation, while we travel. But what really is learning? What do we learn and how do we learn? And what is the best way to learn? In order to answer these questions, let us first look closer into the meaning of learning.

Learning has been defined in various ways. The essence of all these definitions, however, could be put as such: Learning means that we change our behavior due to experiences. This definition excludes changes of behavior due to chemical influence, like taking drugs or, due to momentarily physical changes like being tired or, changes due to genetics while growing up. On the other hand it is broad enough to include the many different ways of what and how we learn.

Definition	=	Learning	=	change of behavior due to experiences

If learning is defined as change of behavior, learning theory can be equated with behavior theory. A good theory in this context then should enable us to explain and to predict behavior. Thus, it should make statements about human learning and under which conditions learning results are best. To understand this relationship between high learning results and the conditions required, let us have a closer look at the different types of learning.

Definition	=	Learning theory	=	behavior theory to explain and to predict behavior

2. Different types of learning

Behavior means doing something or - also - not doing something. The fact that somebody has learned, can be seen in his/her behavior after learning, as stated already in our definition of learning. If, for example, a trainee does not change his/her behavior, then it is impossible for the trainer to know whether s/he has learned anything. This is even more obvious when we look at some examples:

- previously, s/he was not able to explain a concept, but now s/he can!
- previously, s/he was not able to start a stop watch, but now s/he can!
- previously, s/he was not able to be on time, but now s/he can!

Looking at the examples, we can hereby identify different types of learning: Through learning we can acquire knowledge (s/he understands the meaning of the concept and therefore can explain it), skills (s/he can handle the stop watch and therefore start it) and attitudes (s/he values punctuality and therefore is on time)**.** When we have learned something, we are able to change our behavior; we then have acquired new patterns of behavior.

Learning often is quite complex and involves all areas. Let us look at driving: What actually happens when we learn how to drive a car? What knowledge is acquired? What skills are acquired? What attitudes are acquired? What patterns of behavior are acquired? We can easily see that all three areas are involved which then results in the actual behavior of how we drive a car.

So through learning we can acquire new…

…knowledge

We **know** more than before.

…skills

We **do** things better than before.

…attitudes

We hold a different **opinion** than before.

…patterns of behavior

We **behave** differently than before.

These different types of learning can also be expressed in other terms: cognitive, psychomotor and affective type. Pestalozzi, a Swiss educator, speaks of "Head, hand and heart". He recommends that successful learning and teaching has to activate all three types equally.

As we saw already, **cognitive** learning (head) is concerned with the development of ideas and concepts. It covers much of what academic learning demands. It involves, among other things, understanding, reasoning and problem solving.

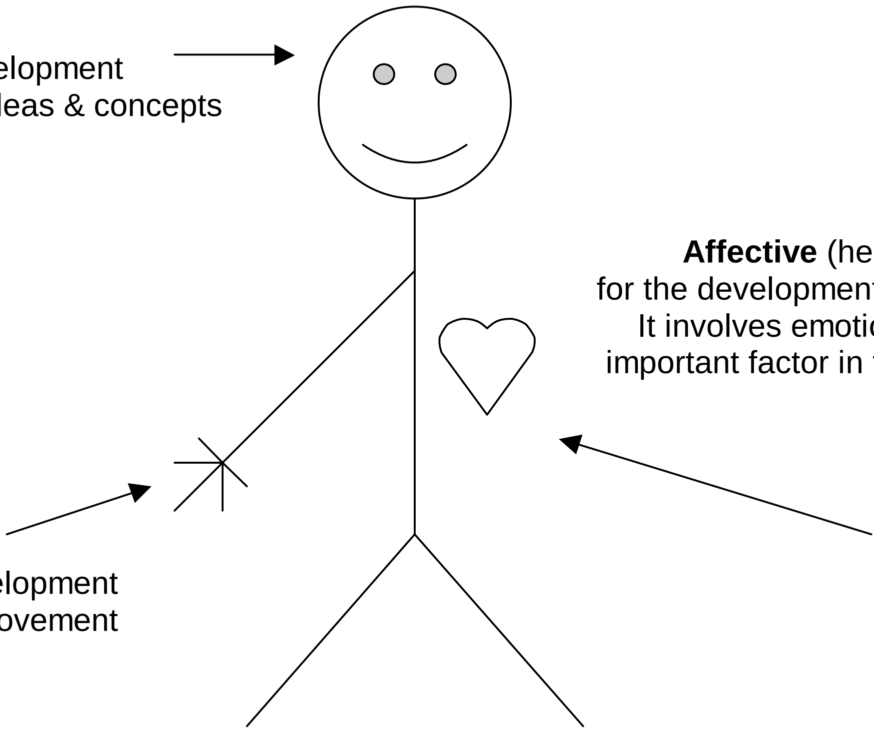

Affective (heart) learning is important for the development of values and attitudes. It involves emotions and affect. The most important factor in teaching appreciation is, of course, the teacher.

Psychomotor (hand) learning involves understanding the external world through the senses and the muscles. It varies from large muscular to fine motor skills based mainly on perception. This type of learning is particularly crucial in vocational training.

Deutscher Entwicklungsdienst

3. Different ways of learning of human beings

By now, we have already defined learning and identified different types of learning. But how do we learn? Let us again look at some examples:

Trial & error

A supervisor holds a stopwatch in his/her hand, and fumbles with the crown and the pushbuttons in order to find out how it can be started, and what function the various knobs have. S/he notes what happens when operating the crown and the pushbuttons on the side. S/he becomes familiar with the functions of the watch, and can operate it to conduct the desired function. S/he has learned by trial and error.

Observation & imitation

It is shown to the supervisor how s/he can start and stop the stopwatch by pressing the various knobs. S/he watches closely and copies until s/he succeeds in operating it. S/he has learned by observation and imitation. (By the way, most of social learning is acquired by observation and imitation.)

Insight

The supervisor reads in the operating instructions that the stopwatch must be wound up carefully so that the spring does not break, and that the crown must be pressed vertically so that the axle is not deformed. S/he appreciates this and follows the advice. S/he has learned by insight.

Repeated perception

Whoever needs to look up the same telephone number frequently in a telephone directory will gradually note this number. S/he has learned by means of repeated perception.

Adaptation

As a heavy smoker a student in a class would like to light a cigarette. S/he looks around, and sees that no one is smoking, even those of his/her colleagues whom s/he knows to be smokers. S/he adapts, and from now on refrains from smoking, mostly also when it does not suit his/her environment. S/he has learned by adaptation.

Instilling in the mind

Somebody reads the definition of learning. S/he repeats it several times until s/he knows it by heart. S/he has learned by repetition, or by instilling it in his/her mind.

Repetition

So we now know that human beings learn and thus change their behavior in various ways. Of course, learning can also be very complex and thus involve different approaches that are combined.

4. Different ways of learning of animals

As in other fields, e.g. drug or food research, research on learning is also carried out on animals because, as research objects, humans are much more complicated than animals. As we all know, not only human beings can learn or change their behavior, other creatures can do so, too. We only need to think of the circus, of dancing elephants, seals playing football, cockfighting, spider-fights or boxing bears. Animals can also acquire new patterns of behavior, they are able to learn. One of the most famous experiments was carried out by the Russian physiologist Pavlov. It is commonly referred to as Pavlov's dog:

Conditioning

A dog is fed on meat. The secretion of salvia in his mouth is measured. Every time the meat is offered, a bell sounds. After about 25 repetitions, the dog secretes saliva as soon as it hears the sound of the bell, without having seen the meat. The dog has learned to respond in a particular way to a certain stimulus that means to behave as required. This is called learning by conditioning: a particular stimulus is followed by a particular response.

Reinforcement

Another famous example is Skinner's rat experiment in the so-called Skinnerbox:
A rat in a cage is given food when it presses a lever while a certain light is on. It is rewarded by food when it behaves as desired. The reward of food reinforces learning. Such learning is called learning by reinforcement. A form of behavior can be promoted and changed by reinforcements.

Trial & error

Thorndike conducted an experiment with a cat in a cage: A hungry cat is locked into a cage; the door can be opened by means of a loop. When the cat draws on the loop, it can leave the cage and reach the food lying outside the cage. The first experimental sequences are characterized by random behavior of the cat: it scratches, bites the bars and runs round the cage. It eventually operates the loop by chance. In the following sequences, the time until the problem is solved becomes shorter and shorter, although the entire learning process is conducted very slowly and unsystematically. Only in the course of the final phases of the experiment does the cat operate the loop immediately it is placed in the cage. We call this learning by trial and error.

Animals can only learn in the ways just illustrated. Like animals, human beings are also conditioned: a certain form of behavior can be achieved by praise or punishment, by devoting or withholding attention (reinforcement), and certain skills, e.g. the operation of a stop-watch, can be learned by trial and error. But these simple forms of learning are not sufficient. We only need to think of learning a foreign language. It can easily be appreciated that it would take considerable effort to teach a person a foreign language only by means of reinforcement. Think of learning how to drive a car by trial and error!

The main difference between animals and human beings is their reason, their intellect, which enables them to think and to understand. They can understand what they learn. They can understand why something has to be done the way the trainer or teacher says.

5. *Learning theory*

Let us now have a closer look at some learning theories and what they have to offer with regard to teaching. Within psychology, there are two major schools of thinking: behaviorism and cognitivism. Behaviorism focuses on human behavior and its conditions. Being influenced by the natural sciences, the emphasis is on measurable and observable components of human behavior. Behaviorists look into the specifics. Learning according to them is based on forming associations between stimuli and responses.

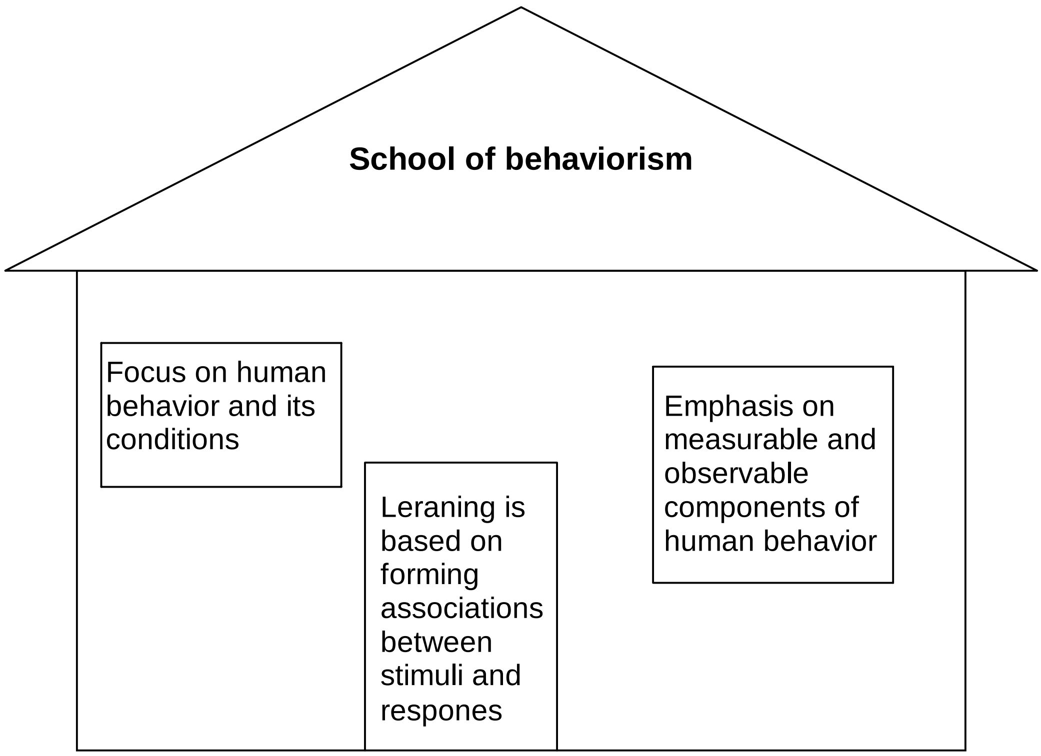

Inspired by **Pavlov, Watson** developed a learning theory of classical conditioning: a particular stimulus will lead to a particular response. **Guthrie** took this concept a step further by linking stimulus and response: once this linkage is established – a certain stimulus is followed by a certain response -, it will repeat itself automatically. He also elaborated on three methods to change behavior: the tiring-method, the threshold-method and the incompatible stimuli method.

Thorndike introduced the law of effect: a positive condition will be reinforced, a negative condition will fade away. The more often a certain stimulus-response-reaction is practiced, the more it is reinforced. This enhanced the drill-approaches in teaching.

Skinner developed the theory of operant conditioning to explain behavior that occurred without a particular stimulus. To him learning is mainly a consequence of reinforcing responses. His most important discovery was that learning is most successful when it is continually reinforced in the beginning and lasts longest by intermittent repetition.

Hull tried to establish a system which would allow to forecast reactions. Central to his theory is the concept of habit: a hierarchy of habits comprises numerous stimulus-response-connections. These are related to each other by a common goal: behavior is useful by aiming for a goal. Thus habits are reinforced, also by antedating goal responses, e.g. a rat in a maze already licks its mouth when entering the last round before it actually reaches the goal.

Spence took this idea a bit further. To him antedating goal responses can by themselves be sufficient to reinforce behavior. The power of a habit does not rely on reinforcement like Hull said, it is a matter of quantity of stimulus-response-reactions.

Cognitivism focuses on brain activities such as cognition and insight. According to this school learning is a process of discovering and understanding relationships, of organizing and re-organizing information into meaningful patterns. The emphasis is on perception, decision making, processing of information, understanding and problem solving.

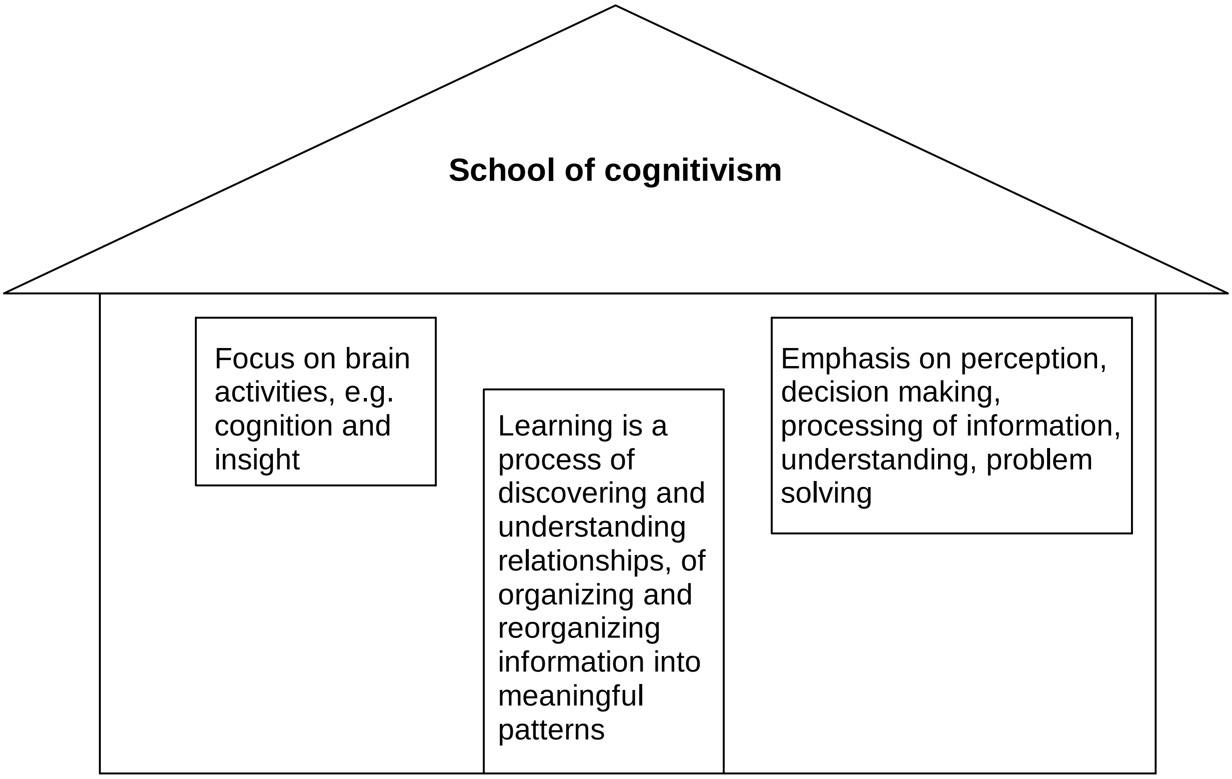

Hebb somehow stands between behaviorism and cognitive psychology. He developed a neuro-physiological theory according to which the phenomenon of neural activity in the brain is responsible for learning. This cell activity creates a state of arousal: The optimum functioning of human beings takes place at a medium level of arousal. The organism tries to maintain that level.

Tolman elaborated the theory of goal-oriented behavior. To him all behavior is goal-oriented which means behavior is not so much influenced by stimuli but by cognition. Learning then is not a result of stimulus-response-connections but cognition: to be aware that a certain behavior leads to reward. This knowledge directs behavior.

Gestaltpsychologists, among them Köhler, Koffka and Wertheimer, concentrated on synthesis instead of the classical analysis as established by Freud: they stated that the whole is bigger than the sum of its parts. Their main interest were the laws of perception which they transferred onto the thinking process. According to them human beings don't learn by trial and error but by insight.

Bruner developed a theory of categorizing. The value of what has been learned is measured by the level to which it can go beyond the given information. To him human beings categorize stimulus-events and out of this develop concepts and systems of related categories with broader validity. He recommended discovery oriented learning.

Piaget's focus was on development of the child. He identifies four stages of development and defines intelligence as an interactive process of two human ways of functioning: to rehearse previously learned activities (assimilation) and to modify behavior (accommodation). The optimum equilibrium between the two equals the maximum intelligent behavior.

Though each of these theories emphasizes their differences, they have much more in common than one thinks at first. Historically the search for a learning theory somehow takes for granted that there is just this one theory. But suppose there isn't just one theory to explain human learning; since there are so many ways of learning, there might also be the need for many different theories to explain them. Bandura and others have developed systems which try to integrate various theoretical positions. In day-to-day teaching we should try to take into account that there are many ways of learning. Therefore our teaching methods should reflect this variety by applying different methods, so that as many students as possible can be reached and benefit from our teaching.

6. The three steps of human learning

Learning, as we have defined it, begins with experiencing something: from a friend, on television, in a book, from the teacher, from the trainer. We receive some – new – information. We then reflect on it, because we also want to understand and comprehend it. We try to find out what the information means which we have experienced. This understanding and appreciating of information ultimately distinguishes human learning from learning of animals. However, it is quite obvious that we also have to remember what we learned. Without memory, we would not be able to learn anything, that is, to instill something in our mind.

Therefore, we have not learned something until we have…

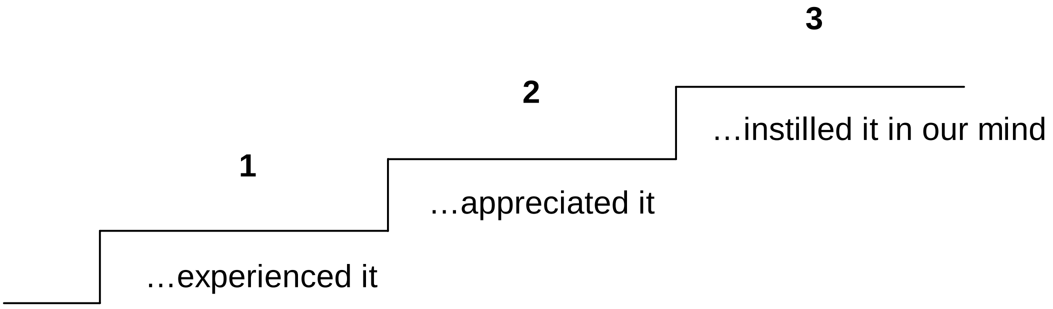

In professional education and training a pupil or a trainee experiences something new in class or in instruction – from the teacher and the trainer, from a book, by way of teaching aids etc. Explanations by the teacher, questions by learners, joint discussions, reflection etc. help the pupil gain his/her own insights or understanding. S/he appreciates and understands why something is as it is. In this way two important steps towards the success of learning are mostly made in class: the students experience something and they understand and appreciate it.

But unfortunately, what has been experienced and understood, has not yet been remembered and instilled. This is also true in class and in instruction. Here, too, only remembering makes learning complete and successful. Generally, more time passes than is available in class or in instruction until one has instilled something in the mind.

To achieve the latter, it is important to know what enhances memorizing information. As for understanding, it has above all something to do with logic, with consideration, with reflection, with inquiry, with explanation. We need someone to answer our questions and to explain the material to us. Remembering and instilling has above all something to do with repetition. We mostly remember only what we repeat to ourselves again and again.

To understand this better, let us look at a model of the human memory that can help us to explain its functioning and therefore understand better how human beings learn.

7. The three components of the memory

We should be aware that at present we are still unable to completely understand how our brain and particularly our memory functions. Therefore we are only looking at a model, which does not represent any physical structures: they are only abstracts or a concept that helps us to understand the human memory.

Accordingly, the human memory consists of three parts: the sensory, short-term and long-term memory.

The sensory memory is very limited in terms of quantity of information which it can make accessible to us and also in terms of duration: It is a phenomenon that only lasts for parts of a second. That means a very limited number of stimuli are accessible – can be remembered or noted – within a very short period of time, even though we have not paid them any attention.

For example, during a cocktail-party we can talk with someone without noting what is being said around us but as soon as our name is being mentioned, we suddenly listen. Or, we walk in the street and a good friend of us passes by. We continue to walk and only two seconds later we stop and turn around because we have recognized our friend: the sensory memory then is like an echo – therefore sometimes the sensory memory is also referred to as the echoic memory.

Nevertheless, these perceptions can lead to vital response. We only have to think of driving a car: a car horn, a pedestrian in the center of the road, a red light. Here, perceptions often trigger off essential reactions, although they only stay in the memory for parts of a second, and then are forgotten.

The short-term memory is a phenomenon that only lasts for about 20 seconds if the information is not repeated. It can store about 7 items plus or minus 2. It allows us, for example, to look up a number in the telephone directory and dial up this number without looking at it again. It allows us to forget this number immediately after we have dialed it. However, should the line be busy and we have to dial it again, we usually will have to look it up a second time.

The short-term memory is an active, ongoing process. It stores information only for a very short time – as long as it is repeated. Afterwards it deletes this information. Basically it can be said that it comprises everything that is within our attention or awareness at a given moment. As such, it can also be called the actual consciousness.

Each day we are exposed to thousands and thousands of sensual impressions through the eye, the ear or the skin. All of these impressions first enter the sensory memory where they leave a sensory mark. At the next stage they enter our short-term memory where they are associated with words and names.

If we are not attentive, these perceptions pass by like noises in the street or like the sound of a foreign language. They are regarded by the short-term memory as uninteresting for storage. Thus, the short-term-memory has the function of a filter or "door-keeper": it decides what to let pass and store and what to dismiss and delete. This is an extremely important function, because it protects us against over-loading with information.

The long-term memory comprises everything else. It consists of encoded, consolidated information out of the short-term memory which then is equated with concepts and meaning. Not only does it store information over a much longer period of time than the short-term memory, it also is much more passive as opposed to the active ongoing process of the short-term memory. It is also much less susceptible to interference and its capacity is much higher. While it is easy to call upon information in the short-term memory, it can take much longer to retrieve information from the long-term memory.

Previous models thought of it as a continuous recording of all our experiences, not unlike a video tape. Recent research has developed different models: they are all of an associative nature. Basically this means that all information is linked with each other and forms knots like in a big web. For example, when we search for a certain item in our memory, we don't just simply produce a long chain of answers and see whether they fit the question or not, we try to limit the area in which the information can be found by linking it with other information.

The three components of the memory – a model

Type of memory

Sensory memory → **short –term memory** → **long-term memory**

Iconic or echoic | primary: kept up through repetition | secondary: encoded out of short-term memory

Content of memory

Input: sensual impressions → words or names kept up through repetition → encoded consolidated → concepts meaning

8. *The sequence of learning*

Looking at the model of the memory, learning has to take into account the three different components. And since the learning process presupposes a time sequence, it follows that learners must go through the 4 phases of learning: the preparation phase, the acquisition phase, the storage phase and the memory phase. To understand the four phases better, let us look at an example: we try to learn the English word " façade".

façade

The preparation phase: concentrating & perceiving

Here we concentrate on our task. We see the word and the explanation. This perception is absorbed in the sensory memory. It is stored there only for a very short time – just as long as to leave a sensory impression.

↓ Sensory memory

Acquisition phase: naming & understanding

Here we become aware of the words as such. We learn that the word façade corresponds to the front side of a building – that is, we understand its meaning. All this takes place in the short-term-memory. There it stays as long as we pay attention to it.

↓ Short-term memory

Storage phase: repeating & encoding

It may happen that we have really understood the meaning of the word façade but when we are asked after a few minutes, we can no longer remember it. In order to remember the meaning and to apply it later, we repeat the word and its meaning several times and encode it. This then will migrate into the long-term memory where it is kept for a very long time.

Memory phase: abstracting & linking

What has been learned, is admittedly absorbed into the long-term memory. But although we know the meaning of the word façade, it may be that we cannot remember it a few days later: The stored information cannot be recalled under every condition or at any time. To retrieve and remember stored information, we have to get abstracts of its meaning and link it with other existing information.

↓ Long-term memory

9. *How to prepare information for storing*

As already outlined, we have to prepare information for storage so that we can retrieve and remember it later. Let us again stay with our example: we want to learn the meaning of the word “façade”. After we have heard the explanation of the word we spontaneously think of the word “face”. We associate the word “façade” with “the face of a building”. Such linking of words is called association. When learning the meaning of the word “façade”, the word “face” is the mediator.

That way we have made use of what we learned at an earlier stage: the meaning of the word “face”. If we had not had such a mediator, we perhaps would not have learned the word “façade” that quickly.

The greater the number of connecting links, the easier and quicker the learning process. These connecting links may be words (“face”) or images (a building can have a face). The material to be learned (“façade = front view of a building”) is encoded by the connecting links. This also reflects the model of the long-term memory: all stored information is linked among itself like in a big web. In the same way encoding and abstracting are important performances in learning. The better the learning material is structured, the better we learn.

Preparing information for storage means:

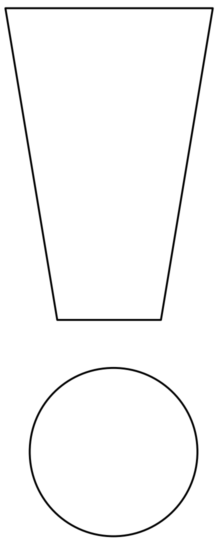

Be conscious of meaning.

Learn sensible material

Structure learning material.

Make abstracts from meaning.

Link unknown to known information.

Make use of mediators, particularly visuals.

10. How to remember information

"I worked through everything and understood everything – and now I have forgotten all!" This is the lament of many students before an examination. S/he has assimilated the material, comprehended it, but is unable to remember it.

Remembering depends on:

- the nature of the material to be learned
- the preparation of the material to be learned
- how often the material has been repeated

The nature of the learning material will have an impact on the learning strategy – learning a language is different from learning how to drive. Next we must prepare the material to be learned – we must organize and portion it. But remembering has above all something to do with repetition. For information to migrate from short-term to long-term memory, it needs to be repeated several times. In the same way, the more often information is repeated, the better it is remembered. As for repetition to be effective, it should take place in intervals: short breaks at the beginning, longer breaks later. Mnemonics can also be very helpful. However, the best review is application of what we have learned: Practice should be conducted in different settings, e.g. learning from a textbook, reviewing in a group together with other learners.

Remembering information means:

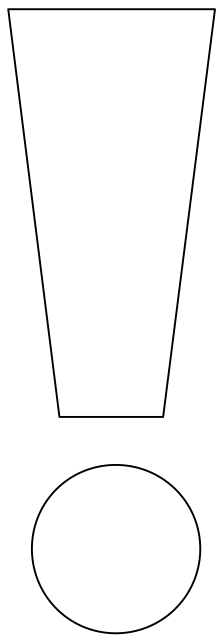

Organize material.

Portion material.

Repeat material.

Learn in intervals (short breaks at the beginning,

longer breaks later).

Make use of memory techniques.

Review material.

Application is the best review.

The retention span of learning material also is related to the way we acquire information: the more senses are involved in the learning process, the higher the learning results. Teaching therefore should try to make use of teaching methods that incorporate as many senses as possible.

Acquiring and remembering information

10%	by reading
20%	by hearing
30%	by seeing
40%	by seeing and hearing
60%	by talking about it
80%	by exploring and phrasing on your own
90%	by exploring and overcoming difficulties on your own

11. How learning is enjoyable

As we have seen, learning is a very complex process: often, it means work, even hard work. However, we know from our own experience that we learn much easier when we are interested in a subject – we even enjoy it! Enjoying to learn is thus associated with readiness to learn, with motivation for learning: it is associated with the why and wherefore of learning.

Wherever interest in a subject is present, occupation with the corresponding material to be learned is felt to be exciting, and pursued again and again. As teachers we should therefore aim to create an interest in the subject and try to motivate our students to explore the material to be learned. Of course, curious people enjoy learning more. Learning is also enjoyable if we can link it to our own problems in life, to our own experiences or to what has been learned earlier.

Learning is also enjoyable if an incentive is created by the new task, since human beings have a need for reward and recognition by other people (extrinsic motivation – coming from without). Admittedly, the level of difficulty may not be so great that the solution is thought to be unachievable. The more frequently the learner has an achievement, that is,

realizing that s/he can solve more and more difficult tasks, the more s/he will like the material and enjoy learning (intrinsic motivation – coming from within).
As teachers we should aim to make learning as enjoyable as possible. The best way to achieve this is to make use of our knowledge about how human beings learn and to apply this knowledge to our lessons. But foremost, we have to enjoy what we are doing ourselves: enjoy the teaching and what we are teaching. Because if we don't enjoy it how can we expect our students to enjoy learning it?

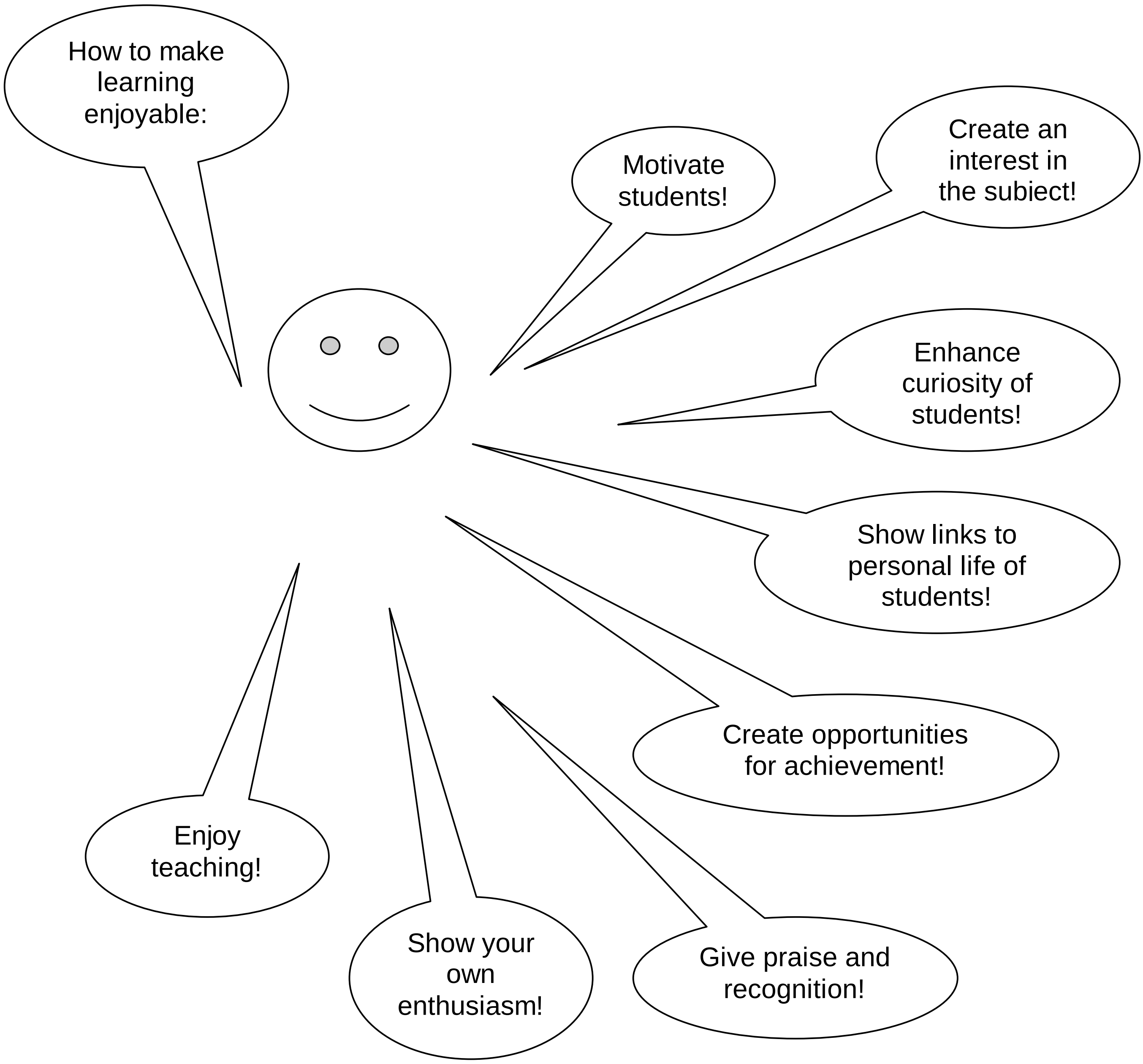

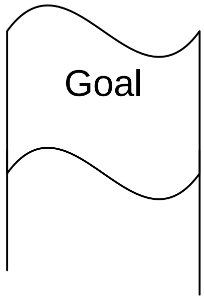

Unit 3 Learning Objectives

1. The importance of learning objectives

In the previous chapter, we had a closer look at general aspects of human learning. We also defined learning as a change of behavior due to experiences. To assess whether someone has learned something or not, therefore requires a clear statement about what is being learned (content) and how it is being demonstrated or performed (behavior) by the end of the learning process.

The precise formulation of learning objectives, with an integrated description of behavior and the contents of learning, is crucial for the learning process. If you name operationalized objectives,

- say what the pupil has to know after the lesson or how s/he has to handle, do or use something
- name the resources at her/his disposal (by using a dictionary, a tool)
- say how s/he has to do it (in which time, with what precision)

This reduces misunderstanding concerning training measures and thus helps both parties involved – the teacher and the student.

Occasionally, goals are expected to be written exclusively in the form of operationalizable objectives. This has admittedly eliminated imprecise formulations of objectives. However, the setting of operationalizable objectives often makes excessive demands on the teachers and is questionable in the case of learning achievements of higher quality resulting from longer term learning process. Complex learning objectives are very difficult to operationalize.

2. Implications for objectives

1. It is sensible – both for pupils and for teachers – to specify as far as possible the objectives of instruction and learning.

2. Objectives for a certain learner group need not be identical for all learners. They can and sometimes must be different for subgroups or individual learners according to their different preconditions of learning. Such objectives may be different with regard to the amount of subject matter covered and/or the level of achievement.

3. It is advisable to ask whether a minimum level (basis) of objectives is to be set for all learners. In that case you have to find out objectives suitable for the poorest pupils.

4. We should inform the pupils about the instructional objectives in advance. We should tell them criteria, which enable the pupil on his/her own to assess or control whether s/he has mastered the instructional objectives.

5. Specifying instructional objectives cannot and must not mean that the teacher tries to reach them in a totally inflexible way, without deviating from his pre-planned lesson structure. Teaching and learning is a process that must leave room for changes during the lesson and for alternative objectives. But we can only know that we deviate from a certain instructional objective or lesson plan, if we first have it defined precisely.

6. Only if you define your objectives precisely in advance is it possible to assess and evaluate the achievements of your students adequately to prior fixed norms. If not, you run the risk of judging out of the moment, which might not be fair to your students' performances, resulting in either over- or underrating them.

Learning objectives should be…

S	specific	stated in action verbs	S
M	measurable	indicating minimum level of concept response	M
A	attainable	according to trainee potential and field of experience	A
R	realistic	resource- and reality-based	R
T	time bound	be in coherence with the training timetable	T

3. *Taxonomy of objectives*

Objectives can be classified in various ways: one way is by their degree of abstraction. So we will normally find three levels: general, rough and individual (detailed) objectives. These then give rise to the pyramid of objectives, which starts from a few abstract objectives at the top, which are then broken down into various concrete and precisely operationalized specific objectives at the bottom.

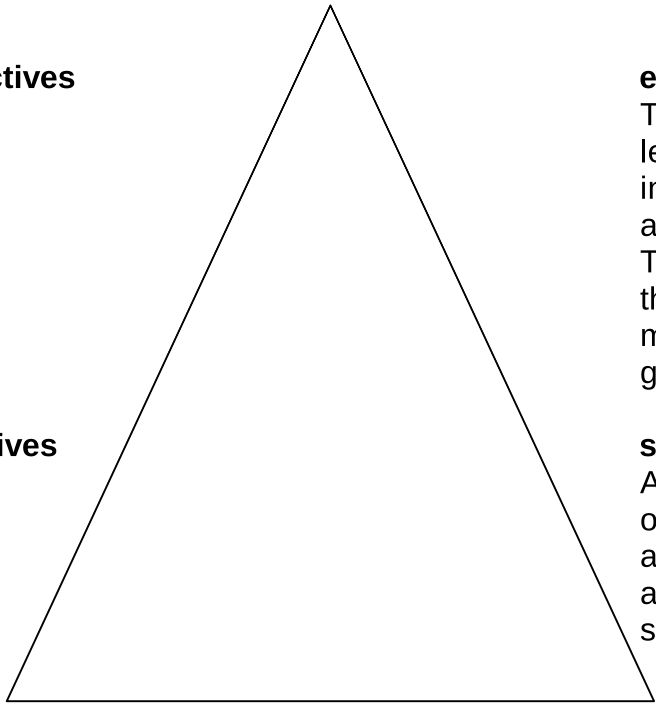

General objectives

educational policy
They constitute the highest level of abstraction and clarify intentions in educational policy and basic education goals. They are normally set out in the educational platforms of ministries or socially influential groups.

Rough objectives

subject/training course
At the middle rough objectives outline the knowledge and abilities, which are to be achieved by means of the subject or training course.

Specific or detailed objectives

actual teaching
Using them, individual or detailed objectives can be formulated for the concrete level of teaching.

Another way to classify objectives is by their degree of difficulty and by their areas: as already outlined in Unit 2, we can distinguish between cognitive, affective and psychomotor learning domains.

The psychomotor domain (hand):
Here the objectives can be ordered according to the degree to which operations have become automatic.

Level	General Instructional Objectives	Action Verbs
Perception	Recognizing a given set of actions. Watching a series of motions.	attend to, listen, look at, notice, observe, view, watch
Set-up	Positioning self for action. Recognizing given procedures as preliminary to action.	adjust, arrange, order, position, prepare, select
Guided response	Imitating and repeating performance of skilled instructor. Assuming roles or situations. Acting out pre-planned actions. Demonstrating procedures and methods.	act, demonstrate, display, exhibit, illustrate, perform, role-play, show, repeat demonstrated skill (drill, fry, paint, sew, type etc.)
Internalized response	Performing skill/task up to or exceeding established standards.	Perfecting demonstrated skill (drill, fry, paint, sew, type etc.)
Complex response	Applying internalized skill to new situations and under any given circumstances. Combining internalized skills to perform complex operations.	Integrate skill into complex actions and problem solving

The cognitive domain (head):
In the cognitive domain the hierarchy of objectives follows the principle of increasing complexity. It is assumed that higher objective levels cannot be reached until those beneath them have been dealt with.

Level	General Instructional Objectives	Action Verbs
Knowledge	Knowledge of common terms, specific facts, methods and procedures, basic concepts, principles.	arrange, define, duplicate, label, list, memorize, name, order, recall, recognize, relate, repeat, reproduce
Comprehension	Understanding of facts, principles, verbal material, charts, graphs etc. Interpreting, translating, summarizing given information.	classify, describe, discuss, explain, express, identify, indicate, locate, recognize, restate, review, select, tell, translate
Application	Applying concepts and principles in practical situations and in different context. Demonstrating correct usage of a method or procedure.	apply, choose, demonstrate, dramatize, employ, illustrate, interpret, operate, perform, practice, schedule, sketch, solve, use
Analysis	Recognizing assumptions and logical fallacies in reasoning. Separating whole into parts, until relationship among elements is clear. Evaluating the relevance of data. Analyzing structures.	analyze, appraise, calculate, categorize, compare, contrast, criticize, diagram, examine, experiment, discriminate, distinguish, inventory, question, test
Synthesis	Writing a well-organized theme, giving a well-organized speech by combining elements to form a new entity from original one. Proposing a plan for an experiment. Integrating different areas of learning into a plan for solving a problem.	arrange, assemble, collect, compose, construct, create, design, formulate, manage, organize, plan, prepare, propose, set up, write
Evaluation	Judging the logical consistency of written material, the adequacy with which conclusions are supported by data, the value of a work by use of external standards of excellence.	appraise, argue, assess, attack, choose, compare, defend, estimate, judge, predict, rate, score, select, support, value

The affective domain (heart):
Here one can produce a hierarchy of objectives according to the degree to which values and attitudes have been brought into the student's consciousness and to what degree they have been internalized and become automatic.

Level	General Instructional Objectives	Action Verbs
Receiving	Listening attentively. Showing awareness of the importance of learning. Paying close attention to the classroom activities.	ask, follow, listen, reply, watch
Responding	Performing according to received input (lecture, demonstration etc.)	answer, comply, conform, execute, follow observe, perform, practice, present, show
Valuing	Developing and demonstrating a preference according to outlined values and standards.	complete, describe, differentiate, explain, form, initiate, invite, join, justify, propose, select, share
Transferring	Appreciating values and high standards in other areas.	adhere, alter, arrange, combine, compare, defend, generalize, identify, integrate, modify, relate, synthesize
Creating	Displaying general awareness with regard to values and standards. Creating standards in which proper conditions prevail. Total behavior is consistent with values internalized.	act, discriminate, display, influence, practice, propose, qualify, question, revise, solve, use, verify

Let us take the process of learning of riding a bicycle as an example for the taxonomy of learning objectives in the different domains.

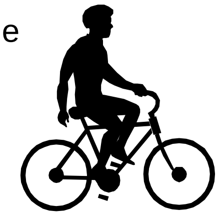

Hierarchy of cognitive learning objectives:

Knowledge	The pupil can name the elements of a bike: frame, fork, handlebars, saddle, wheel, pedal, chain, bell…
Comprehension	The pupil can describe how the movement of the legs causes rotation of the pedals and the front chain wheel. S/he also can describe that the chain as a link between the front chain wheel and the back wheel will advance the bike.
Application	The pupil can describe how a drum brake works by comparing their elements with those of a rim brake.
Analysis	The pupil can calculate the transmission and the speed of a bike, when different chain gears are used.
Synthesis	The pupil can make a plan how to assemble and how to adjust the ball-bearing of the front wheel.
Evaluation	The pupil can decide between two bikes which one is the best: quality of fabrication of the frame, handling, equipment, transmission.

Hierarchy of affective learning objectives:

Receiving	The pupil is listening to the teacher while s/he is telling the advantages of a cleaned bike and an oiled chain.
Responding	The pupil cleans his/her bike and puts oil on the chain, because his/her teacher has recommended it.
Valuing	The pupil prefers to use a bike which is in a proper condition and which has an oiled chain.
Transferring	The pupil likes always to use equipment which is in proper condition.
Creating	The pupil creates standards where proper conditions are integrated.

Hierarchy of psychomotor learning objectives:

Perception	The pupil observes a person who is using a bike.
Set-up	The pupil recognizes the position of pedals and own posture in relationship to the bike.
Guided response	The pupil can ride a bike a certain distance without falling. The pupil on the bike can follow a line drawn on the floor and can pass some obstacles.
Internalized response	The pupil tries other possibilities to ride a bike: Without use of the hands. Taking with him/her another person on the carrier.
Complex response	The pupil can use the bike in any circumstances.

Unit 4 Teaching Methods

1. Definition

According to the dictionary a method means the

Method	=	a way or manner of doing something
	=	the use of an orderly system as opposed to luck

In the context of teaching a method means

Teaching method	=	the way a teacher uses to impart knowledge to students
	=	the way of developing skills and capabilities
	=	the way of facilitating exchange of experiences

We know that we can teach the same knowledge in different ways and that different teachers prefer different methods. However, different objectives demand different structures and methods as do different target groups. Regarding all these facts we can emphasize that we need a variety of different methods to conduct a successful lesson or training.

2. The right choice

To chose the right methods we have to consider a number of aspects: First of all, does this method lead us to our learning goal? This may very much depend on the domain of learning – affective, cognitive or, psychomotor. Next we have to check whether the method is compatible with the subject, e.g. language training is different from math teaching. Another consideration is the target group: how can the participants best be reached? Age is an important fact here to be considered. Of course, participants also have to be comfortable with a method; the same holds for the teacher who has to be able to handle it. Last, not least, we have to assess whether a method can be realized in a given context or not.

?

1. Does this method lead us to our learning goal?
2. Does this method fit to our subject?
3. Does this method address the target group?
4. Are all participants - teacher as well as students - able to handle the method?
5. Is it possible to realize this method?

3. *The most common methods*

The most common methods are now looked at with reagrd to their respective advantages and disadvantages.

The Lecture

Advantages: Easy to plan; teacher pre-determines concept and flow of thought; very effective to impart knowledge.

Disadvantages: Tiring; demands intellectual activity only.

Teacher-Student-Conversation

Advantages: Intellectual activity can be better controlled and managed; freedom to speak is encouraged and is possible; more learner-centered.

Disadvantages: Only intellectual activity; not action intensive.

Discussion/Debate

Advantages: Intense intellectual activity; student can weigh her/his opinion vis-à-vis the group's opinion; creates points of view; develops tolerance.

Disadvantages: Only intellectual activity; result cannot be pre-planned.

Role-play, Planning-Game, Case-Method

Advantages: Exercise to develop complex strategies and persuasive power; exercises presentation skills; satisfies play instinct.

Disadvantages: Only simulating reality; taking much time.

Groupwork

Advantages: Very intensive; including all participants in the process of developing ideas; reduces of inhibitions; generates more solutions at a faster rate.

Disadvantages: Inspite of good preparation time frame difficult to plan and predict.

Fieldtrip/ Interview

Advantages: Close to reality; high independence; recognizes the real capability of students.

Disadvantages: Taking much time; process and result can be planned only partially.

Documentation/ Presentation/ Publication

Advantages: Highly effective for instilling in the students' mind; very good method for self-assessment; exercises presentation skills; good opportunities for generalizing.

Disadvantages: Organizing public participation demands more work; time intensive.

Project/Practicum

Advantages: Very close to the interests of the students; close to reality: creative; high social education components; action intensive.

Disadvantages**:** Much preparation and time required; open ended – unpredictable results.

4. Didactical arrangements

During the preparation we have to take into account the flow of the different methods. The student will get tired and bored if parts of the learning session get too long; s/he will stop listening and start to be restless. When there are parts which are too short, the student will get nervous and loud; s/he will feel that too much is demanded of him/her. These facts also relate to the theory that human beings try to maintain a medium level of arousal. Therefore lectures, presentations and all other activities where the teacher is in the center should not be longer than 20 minutes. As for activities during which the students are in the centre, these should not be shorter than 20 minutes.

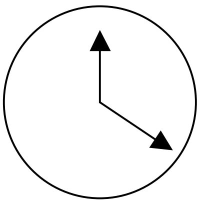

20 – minute – rule

teacher-centered:
each part not longer than 20 min e.g. lecture, presentation

students-centered:
each part not shorter than 20 min e.g. group or partner work

Of course, these activities should alternate – receiving activities (= the students are passive) should alternate with giving activities (= the students are active): breathe in and breathe out! Naturally, that also relates to the retention span of information: the more we are actively involved in acquiring information, the more of it we will remember.

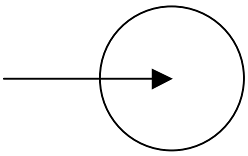

alternation – rule

receiving activities - giving activities

breathe in - breathe out

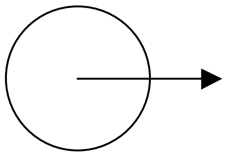

Unit 5 The Lesson

1. General considerations

The basic concept of the „old-school" is often referred to as the funnel model: the teacher imparts knowledge and facts via a funnel to the students who are considered to be empty containers which can simply be filled with knowledge. This model, however, does not comply with modern research results and human learning theory as we have already seen in unit 2; on the contrary, this approach to teaching is quite counterproductive with regard to learning results.

In modern schools we therefore expect interactive lessons where the students play an active role. As we already know learning is much more effective when the students take part, can be creative, are motivated and enjoy learning. The question for pedagogy is: How can we achieve this?

There is not one simple single recipe, but there are some basic rules and experiences. For example, we know that human beings learn almost all their social behavior by imitating other human beings. It is no surprise then that one of the most important rules states: "Learning by doing", as espoused by the American scientist of education John Dewey. As we also know already, human beings learn best, when they have to use most of their senses. There are a lot of methods of interactive/learner-centered lessons. "Copy – Use" exercises are one of the most famous.

Not so frequently used are conversation, discussion, debate, role-play, excursions, interview, documentation, presentation, publication, projects and practicum. Even if we cannot always include methods demanding intense activity, it is important to include activities which improve the lessons concerning creativity, variety and high learning results.

The creative use of these rules - despite the very different conditions of schools and classes - is the real interesting and exciting task of a teacher or trainer.

2. Basic structure of lessons

Taking into account the 20-minute-rule when choosing the right teaching method, the basic structure of lessons consists of four phases, namely: the introduction phase, the acquiring phase (mostly teacher-centered), the exercise phase (mostly students-centered) and the end. Assuming a time span of 60 minutes per lesson, it is divided into a 5 – 25 – 25 – 5 minute rhythm.

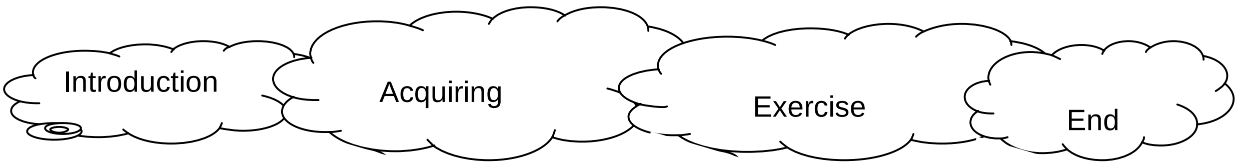

5 minutes 25 minutes 25 minutes 5 minutes

Introduction

A good introduction is as important as all other parts of a lesson. The first impression of the “audience” is formed here at the start. During the introduction most of the students or participants decide whether the subject is interesting for them or not. But that does not only depend on the subject, but also on how it is presented. Therefore a good start is the most important precondition for a good “race”. There are a lot of different ways to start a good lesson; here are some basic features:

Orientation and Motivation:

- Calm down the students
- Create an atmosphere
- Inform about objectives and sequence
- Try to get the interest

Connect to well known subjects:

- Control the homework
- Repeat exercises
- Tell stories out of the surrounding of the subject
- Tell something about a famous person

Catch the attention:

- Include actual or historical linkages
- Use riddles, comics, amazement
- Use cognitive dissonance
- Create contradiction
- Use provocation
- De-familiarize

Acquiring

This is the part where the “knowledge-transfer” takes place, the working out of a subject. Here, very often the teacher is the center of the lesson unless s/he chooses a learner-centered teaching method (discovery approach).

- Impart facts, a theory or show an example
- Show an experiment
- Guide the student to a new insight
- Prompt them to detailed examination
- Let the students examine an object
- Or…..
- Or …..
- Look to “Teaching Methods” and “The Lecture” (Unit 4 and 9)

Exercise/ Apply

During this phase the students should be in the center of activities. Thus, they should explore the presented learning material, apply it etc. in order to find out whether they have really understood what has been presented to them.

- Use exercises with simple tasks
- Let the students try their own experiments
- Discuss in small groups about applying to similar tasks,
- Start to solve more complex problems
- Or or or

End

Here it is important "to tie up all loose ends" – to summarize what has been learned and link the activities of this lesson with further topics and tasks.

- Saving of knowledge
- Consolidation
- Teacher or students repeat/summarize/generalize
- Teacher gives prospect for coming lesson
- Homework or test for consolidation and check
- Teacher checks, assesses, evaluates
- Eventual self-assessment of activity and results
- Assessment from other students

Unit 6 The Four Step Method

1. Introduction

The "Four Step Method" is a simple but very successful method for skills training. The four steps refer to the way human beings learn. The set up is similar to the structure of a lesson: We have to prepare the students, to motivate them, to open their mind (step 1). The acquiring phase here is done by demonstration (step 2). The student’s activity is the applying of the newly learned skill, but still within a learning atmosphere (step 3). The exercising and strengthening take part in the real work situation, but still have to be monitored and evaluated by the trainer (step 4).

For the teacher or trainer this method requires very good explanation skills since each step of what s/he is doing has to be explained. As a skilled person one may take a lot of things for granted. However, the success of the four step method lies, among other things, in the ability of the teacher/trainer to explain exactly what s/he is doing. And remember: quality training is very time consuming!

2. The 4 steps of the Four step method

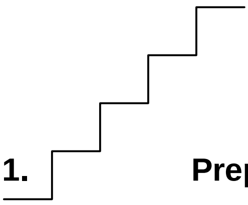

1. **Preparation of student**

- take away the shyness
- motivate
- show the objectives and tasks
- evaluate the knowledge
- familiarize with the work place
- give advice concerning safety

2. **Demonstration and explanation**

- position the student so that s/he is standing in the same direction to the work piece as you are
- demonstrate the whole procedure in original time
- in case of complicate procedures divide them into modules and teach them step by step
- repeat the demonstration and make the single steps visible
- say what you are doing, how and why you are doing it in that way (what? how? why?)
- give the opportunity to ask questions

3. **Student activity**

- encourage the student to try it on his/her own
- don’t interrupt the student in his/her first attempts unless it concerns matters of safety
- make comments on serious mistakes only
- precision is more important than speed
- let the student say what s/he is doing, how and why

4. **Exercising and strengthening**

- give enough time to exercise
- acknowledge progress
- control so that no mistakes are done during exercising
- change conditions of exercising
- slow adaptation to real working condition

Unit 7 Questions in Lessons

1. The exceptional quality of a teacher's question

We remember most of the acquired information when we explore it on our own, phrase it in our own words and overcome difficulties by doing so. Therefore discussions and debates play a vital role in teaching. The active participation of the learner can also help to prevent misunderstandings. At the same time the participants don‘t get tired because they are involved. A very common method to enhance this kind of involvement of students is the teacher-student-conversation. Within this context questions are crucial for success.

As teachers we don‘t ask because we do not know something, but because we want the students to learn something what they didn‘t know before. We want to provoke the students to think about a special item. By asking her/his questions, the teacher attempts to bring the student into a productive embarrassment and to start a learning process.

Teacher's questions are the most important medium to lead a conversation and the most important instrument for…

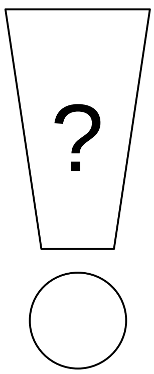

- Guiding the attention of students
- Arousing the curiosity of students
- Arousing appreciation of problems
- Initiating thinking
- Saving of results
- Evaluating students
- Disciplining students

2. Different kinds of questions

As already stated, questions can concern various areas. It will depend on the situation and on the purpose which question a teacher is going to ask. Here are a number of different types of questions:

Questions concerning **knowledge**	*Ex.:*	Who was…? What is the name of….?
Questions concerning the **process**	*Ex*.:	Are you ready now? Does everybody have a copy?
Questions concerning the **relationship**	*Ex*.:	What's the matter with you today? Why are you so tired today?
Questions concerning the **content**	*Ex*.:	What is this article all about? What is the summary of the first paragraph?
Questions concerning **comprehension**	*Ex*.:	Can you tell in your own words….? Can you explain….?
Questions which initiate **thinking**	*Ex*:	How can we solve this problem? What are reasons for this problem?

Open questions — Allow for several and different answers; arouse further thinking and questioning

mostly allow for just one fixed answer — **Closed questions**

It depends on the situation which kind of question we will ask. But there are several forms to avoid:

Chain questions: The teacher asks several questions one after the other without leaving enough time to answer

Leading question: The teacher includes the answer in the question. So it is hard to have a different opinion for the student.

Echo questions: Some teachers repeat the answer of the students by changing them to questions.

Trick questions: The teacher tries to show up the student.

Rhetorical questions: Rhethorical questions are a style of speech. They are not meant to be answered and should be avoided in teaching.

3. Grade of difficulty

To be effective and initiate productive answers of the students a question has to be neither too easy nor too difficult (demanding too much/demanding too little). Here are some samples for demanding too much:

In a **factual** way: The teacher takes knowledge for granted which the students don‘t have yet.

In a **linguistic** way: The teacher uses words, which are not known, or a style, which isn't appropriate.

In an **intellectual** way: The teacher takes a way of thinking for granted for which the students are neither mature nor trained enough for.

Students from whom too much is demanded usually give wrong answers or keep idle and/or silent. The teacher immediately has to try to change the question to give the student a chance to respond with a correct answer. On the other hand, demanding too little often results from the fear of the teacher that the students may no longer be interested in the topic if they give a wrong answer. These students feel bored and get restless.

4. Quality of questions

Getting a feeling for good and bad questions is an important task for a teacher to lead discussions and to initiate a learning process. This also helps to teach students how to ask in the right way. Here are some effects and characteristics of:

Bad questions…

☹ are leading questions.

☹ demand yes/no answers.

☹ serve the self-portrayal of the teacher.

☹ try to emphasize the lack of knowledge of others.

Good questions…

☺ make the class curious.

☺ are answered lightly and fast.

☺ show what is happening in the group.

☺ touch common interest.

☺ include the students' personality.

☺ do not close an issue.

☺ show the targets.

☺ make wishes visible.

☺ may lead to a new question.

5. Technique of questioning

It is very important to ask the right question. Therefore it is necessary to know what question has what effect:

Question formulation	**Effect**
Starting with an interrogative Why What Who When Where HoW	Make a problem evident
Only one question per sentence	Focus on one problem; not demanding too much nor too little
Short, precise questions	Understand the problem easily
Give the question to the whole group	All students are included, start to think
Give enough time	Thinking without time pressure Chance to give reasons for the answer
Formulate open questions	Initiate thinking Opinion forming

Unit 8 The Lecture

1. Comprehensibility of lectures

The most important criterion for effectiveness of lectures is comprehensibility. To make a lecture comprehensible, five major features should be considered which are also related to one another:

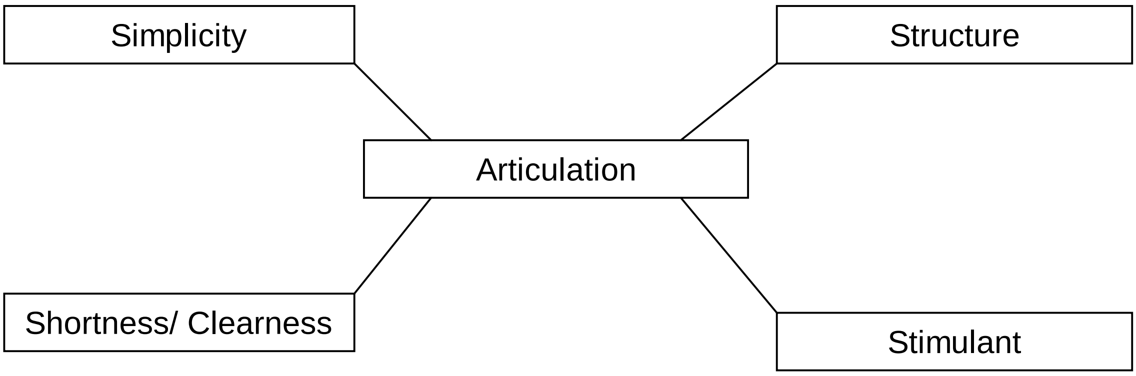

Simplicity:

- Speak in simple terms
- Avoid complicated formulation or foreign words
- Give explanations of specific terms
- Use simple constructed sentences

Shortness/Clearness:

- Use short sentences
- Be exact in what you say
- Concentrated on the objective
- Be precise in your statement
- Give only important and necessary explanations
- Maximize your time

Deutscher Entwicklungsdienst

Structure:

The visible structure:

- What is the topic?
- Reasons for the topic
- Following the structure
- Summarizing

The order of ideas must follow a logical flow:

- Sequence information in a logical way
- Create relationship between different items
- Avoid jumping from one idea to another
- Distinguish between important and unimportant items
- The red thread must be visible

Stimulant:

- Support your statements by stories
- Use a pictorial language, give examples
- Visualize your statements
- Present data and facts by comparison
- Give your own opinion
- Be creative in formulation
- Show that you are interested yourself
- Create an atmosphere
- Include the opinion of a student, if possible
- React to the audience

Articulation:

This is the connector between the other four features. You need a clear and precise articulation to bring your message across. The success of a lecture depends – apart from the content - on the positive body signals the lecturer is showing. Those body signals stand for competence and credibility. There are some general rules:

Voice: speak loud and clear; make pauses, especially when you move; speak slowly; apply verbal emphasis; express enthusiasm.

Posture, bearing: stand upright; face the audience, open, not hidden; stay with both feet on the ground; raised head, but not snooty.

Arms and hands: resting position; pictorial gestures according to the speech; slow, quiet movement; avoid movement below waist; avoid putting hands into trouser pockets.

Face: face the audience, don't look from the corner of your eye, maintain direct eye contact with the audience, 3-5 seconds per person; show facial expressions related to what you say.

Movement: move single-minded, not around; calmly handle your tools, control the movement; move from the front/center of to the side of the room from time to time.

2. Pro and contra of lectures

In modern school systems the lecture is often considered outdated. It is a precept that the teacher has not to talk too much. So many teachers avoid this method and use others. But if we want to create a common base of information or if we want the students to know facts, the lecture is still the cheapest, simplest and most effective method of presentation!

Advantages:
- Efficient transfer of information, explanation, interrelation, facts and dates
- Easy to plan
- Provides opportunity for the creativity of the teacher

Disadvantages:
- Very low activity demand from the students
- Small feedback.
- Tiring
- Demands only intellectual activity

3. The content and preparation of lectures

The most important steps in preparing a lecture are the laying down, the revising and the editing of the content. During a lecture the teacher should try to portray his/her knowledge in a vivid way, therefore s/he needs to edit the information s/he has. That means s/he has to create a colorful, interesting, easily remembered and, of course, attractive material, which „reaches“ the audience best and which will be a useful basis for further reflection, discussion and use. For an expert it is not the problem to get the right information, facts and data, mostly the problem is to choose out of this pool of information those items that fit best to the objectives. To avoid „overloading“ a lecture, regard the following rules:

- Lay down the theme
- Choose the material
- Order it

- Structure it
- Limit it to the essential part
- Make a list of main points and facts
- Show the red thread
- Estimate the time frame
- Shorten

Before elaborating on the lecture it is important to ask yourself the following questions: Which kind of group is the audience? What are their expectations? If you are a teacher you can answer these questions quite fast. To work most efficiently and give an attractive lecture, which includes also talking without a script or even notes, it is important to structure your preparation according to the following steps:

Start and fix the objective of the lecture (Every lecture needs a target)
Keep discarded target formulations; these may serve as captions or key words later
Elaborate the material through brainstorming or mindmap
Work with symbols and colors
Complete and save the ideas found in the brainstorming and mindmap through reading in the literature or in your own notes
Order the key words

1. "talk-think" attempt, note the gaps, but talk
Go on ordering, filling the gaps, changing
Order arguments
Maybe a new brainstorming

2. "talk-think" attempt
Write down the good and important formulation
Work out examples

3. "talk-think" attempt
Fix phrasing, samples and quotations
Pause for inspiration (If possible some days)
Rework
Formulate the end (It is good to fix up some important phrases word by word)
Formulate the introduction (both, introduction and end, should not be more than 20-25 % of the whole lecture)

4. "talk-think" attempt with watch
Shorten (A lecture isn't well prepared if you don't have to shorten it!)
Write your notes on index cards, for every idea one card
The cards must be: well ordered, clearly written, numbered
Use different colors, make tables

Last "talk-think" attempt with watch, again memorize the pictures of the note-cards

Deutscher Entwicklungsdienst

4. The structure of lectures

There are different kinds of models for structures. These models are like "intellectual building plans“, which make it easier to collect and edit the material. The following model is very common:

Introduction - Main part - End

Introduction	Greetings, Theme, Objectives Organizational affaires Motivation
Transition to main part	
Main part Central idea 1 Central idea 2 Central idea 3	4 Structural elements: • Signposts – important information • Bridges – make links • Fences – limit topic • Markings – give meaning 4 Relaxation elements: • Questions • Examples • Comparisons • Persons
Transition to the end	
End	Result/Conclusion Summarize Generalization/Prospects

Unit 9 Visualization

1. Why visualization is so important

As we already know, learning is most effective when all senses are involved in the learning process. Within that context visualization plays a vital role: we apparently can store and remember information far better when it is linked to images. Therefore we should aim to make maximum use of visualization in our trainings and lessons.

Of course, visualization should not be a substitute for the spoken word: It serves to supplement and illustrate what is being said. Sometimes, visualization "tells" even more than all spoken words together: Try, for example, to describe the color red in words. Or think of complex technology processes: here visulaization is a vital element in teaching.

Functions of visualization

- Animation
- Information
- Documentation
- Illustration
- Securing results

Enhancing

- Learning process
- Remembering information
- Retrieving information

2. Some basic rules

When using text, e.g. on transparencies, be aware of the amount and how you structure it. Also pay attention to the letters as such, e.g. size, capital/small letters. Be aware of the use of colours: if not used with thought, the result may just be a colourful image without enhancing the learning process as such.

Some basic rules….

… for writing:

- Form columns
- Avoid whole sentences
- Use key words
- Avoid wide spacing between letters
- Avoid bold letters
- Use capital and small letters
- Same letter size for same importance
- Think of reading habits (top left to down right)
- Use only known abbreviations
- Check writing from the distance
- Show links by same colour and form

…for colour coding:

- Use neutral colour (black) for main parts
- Use red for calling the attention
- Use other colours (green, orange, blue) for emphasis
- Group according to colour (e.g. positive – negative)

3. Examples of design elements

arrows

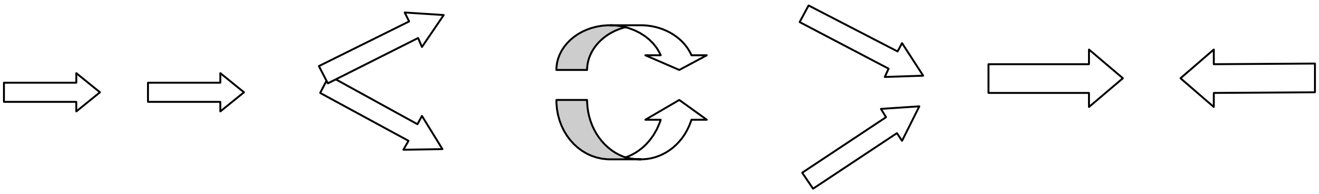

linear diverging cyclic converging contrary

rectangulars, lines, stripes, clouds

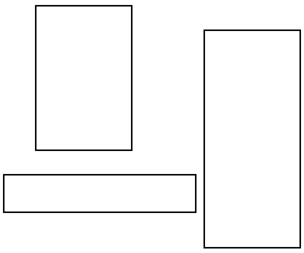

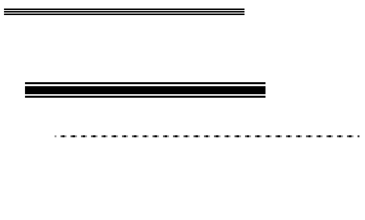

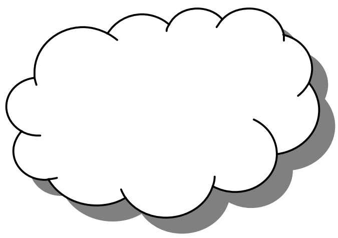

pictograms

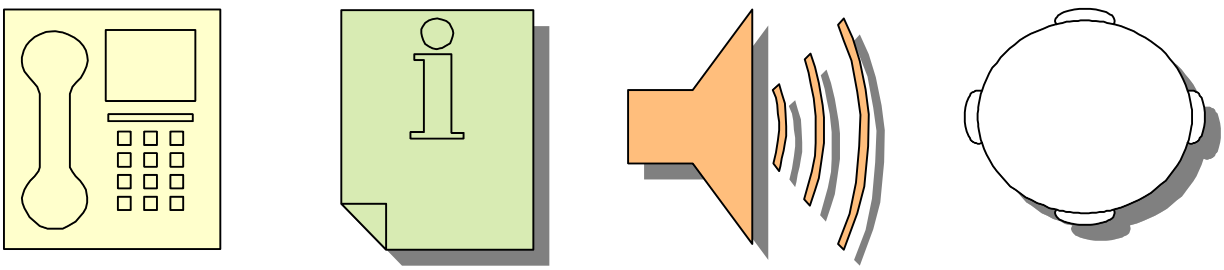

charts

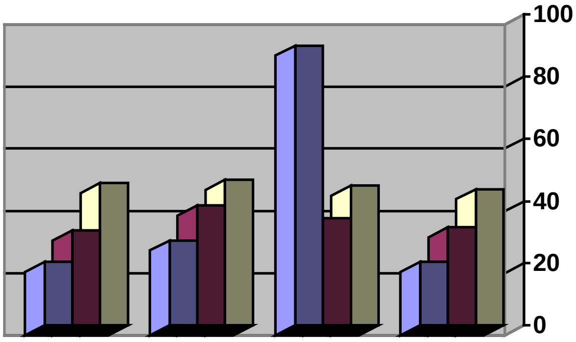

Column chart: comparison of various sizes

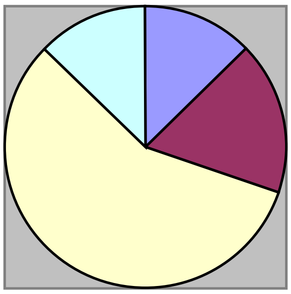

Pie chart: the whole and its parts

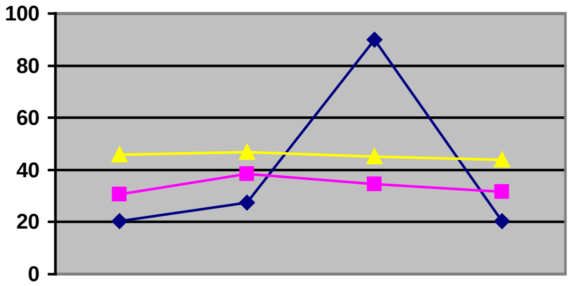

Curve chart: visualizing developments

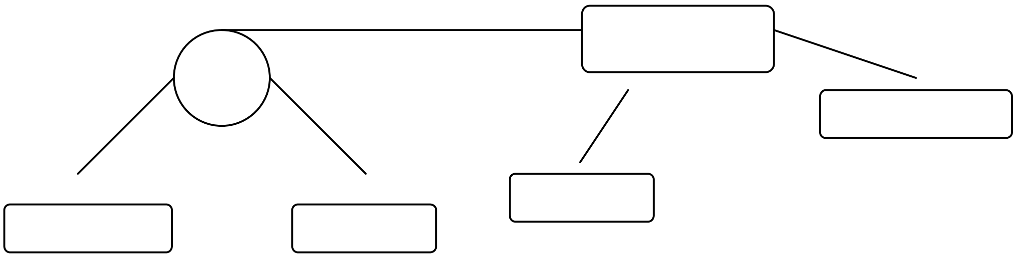

Organigram / flow chart: visualizing structures and procedures

4. Advantages and disadvantages of common visualizing media

Blackboard/Whiteboard:
Advantages:
- Found in almost every classroom
- You can show developments
- Cheap
- Large space for writing

Disadvantages:
- Teacher may tend to speak with back facing the audience
- Most drawings and writings are developed during the actual teaching of the lesson
- Often not well structured

Flipchart:
Advantages:
- Focus is on page that is being displayed
- Easy to prepare in advance

Disadvantages:
- Stand and flipcharts are expensive
- Not easy to handle, particularly for small people

News-print/manila paper:
Advantages:
- Good to prepare in advance
- Good for team work
- Cheap
- Flexible

Disadvantages:
- Needs other tools like markers or crayons and scotch tape or pins
- Needs walls or boards
- Attention: beware of „paper-war“ (too many sheets displayed)
- Does not last long (cheap quality)

Overhead Projector:
Advantages:
- Takes little time to present
- Can be prepared in advance, also with the help of the computer
- You can show colored pictures
- You can keep contact to the audience while presenting

Disadvantages:
- Sometimes loud
- Demands experience in handling
- Not functioning during brown-out

Slides:
Advantages:
- Similar to overhead projector

Disadvantages:
- Not as flexible as overhead projector
- If you make your own slights, it is expensive
- You have to darken the room
- Audience gets easily tired.

Pinboard:
Advantages:
- Often mobile – you can move it around the classroom
- Flexible medium; encourages participation especially together with the use of cards and pins

Disadvantages:
- Participants must be able to express their thoughts clearly in writing
- Participants must write legibly

Power point presentations:
Advantages:
- Makes presentations interesting with the use of colors, graphics and animation

Disadvantages:
- Teacher tends to get glued to the table where the computer is based
- Needs special skill in developing slides
- Requires further expensive equipment (lcd)

5. Teaching and visualization

As we know already, learning results are better when many senses are involved. We therefore should try to activate as many of the students' senses as possible in order to create multi-channel information. Teaching which addresses the students' ears, eyes, sense of taste and feeling, reaches the affective (heart) as well as the cognitive (head) perception and thus can reinforce motivation. As for visualizing, it must be an active process. If the object, for example, is merely presented to the student, there is no guarantee that the information will be stored in the latter's memory. In order to learn, there must be a process of interaction with the object in question.

Direct observation of the real object facilitates spatial orientation and allows sequences of operations to be identified more easily and accurately. The ideal scenario therefore is for the actual object to be shown in a real situation. If the original is too large or the reality is too loud or dangerous, simulations or models should be used. A combination of theoretical and practical learning helps students to understand how they can apply new knowledge in real life situations. Also incorporating professional experience helps to link teaching to real life.

Complex and complicated processes can be simplified: it is important to show the essentials so that the principle of how something functions, for example, is understood. As teachers we should proceed from the simple to the complicated, the known to the unknown, the concrete to the abstract.

The more we involve the students, the higher the learning results. We should give opportunities for exploring and learning by discovery and teamwork; ready made solutions should be avoided.

Requirements for teaching

Address all senses:

- Multi-channel information
- Allow for cognitive and affective perception
- Facilitate active visualization

Link teaching to reality:

- Use originals
- Combine originals with media
- Combine theory and practice
- Incorporate professional experience

Observe teaching principles:

- Show only the essentials
- Simplify complex and complicated processes
- Proceed from the simple to the complicated
- Proceed from the known to the unknown
- Proceed from the concrete to the abstract

Involve students:

- Avoid ready made solutions
- Allow students to work independently with media
- Encourage teamwork

6. The hierarchy of media in teaching

Dale's pyramid of experience

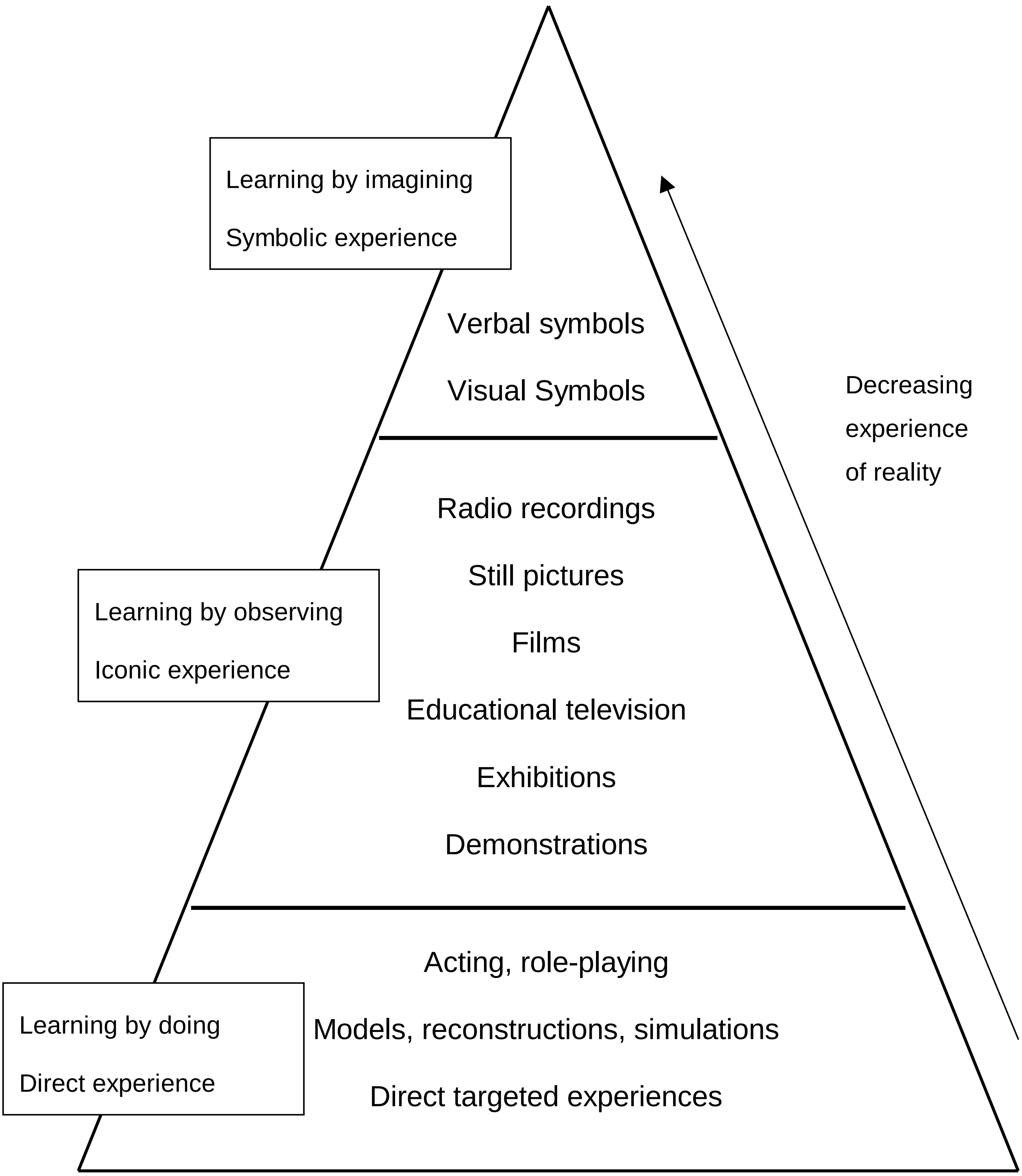

Unit 10 Control and Evaluation

1. The double function of control

Control

….shows the teacher the results of his/her work concerning knowledge, skills and behavior. From the results of control s/he gets clues for the further design of the lessons.	……should enable the students to estimate their performance and their status of development. Assessment should be praise and/or an incentive to change behavior.

The main objective of control is the **stimulation** of high learning results!

2. Demands on control

Control should be:

- objective (measurable)
- comparable (between students, classes)
- possible to evaluate and to compute

Learning objectives and control tests should correspond to a high degree. This relates to the expressions and verbs used (should be the same) and to the incorporation of the three areas of learning in the control tests:

- cognitive (knowledge etc.)
- affective (attitudes, behavior, abilities etc.)
- psychomotor (skills, practical know how etc.)

The students should know the demands made on them: Learning objectives for each part as well as demanded conditions concerning time, quality and quantity. Only what has been taught based on objectives can finally be controlled.

3. The most important kinds of control

3.

Pieces of work,
Examinations

2.

Performance controls,
Tests

1.

Regular control,
Control questions,
Exercises

Regular control, Control questions, Exercises

These are the most important methods for a teacher to get knowledge about the learning results, learning capability and learning success. If possible, regular control exercises should be part of all lessons.

Advantages:

- The teacher always knows the learning results by getting feed back.
- The students have the opportunity of exercising and (hopefully) feeling successful.

Disadvantages:

- Frequent controls can interrupt the ongoing processing of knowledge.
- Positive effects only show, if the control is not in a written form and does not get an important meaning: it is not considered as a test.
- Control is difficult to evaluate and judgment difficult to justify without a written document.

Performance controls, Tests

A bigger learning unit should be ended with an announced, mostly written performance control test.

Advantages:

- The students get the opportunity to see the whole subject and can prepare.
- They get relatively objective information about their level of knowledge.
- The teacher also gets an overview about the results of the last unit.
- Tests offer a relatively objective way of assessment and are easy to evaluate.

Disadvantages

- These kinds of control can easily be perceived as important breaks and opportunities to stand to the test and thus de-motivate the students to study and practice on the other lessons which they believe will not come out in the test.

When formulating tests, a variety of exercises can be used. The most important are:

- Short answer or completing exercises
- Right/wrong answer exercises
- Multiple choice exercises
- Matching and assigning exercises

However, all simple forms of tests cannot control either abilities of understanding connections and correlations or abilities of verbal expression or of applying knowledge.

Pieces of work, Examinations

First of all, pieces of work and examinations should give an objective overview of the level of performance of the whole group. They also should enable the teacher to make a final evaluation of each student. Examinations should be compared with general norms and scales of performance. Their main objective should not be to single out students who are less efficient.

Control of practical skills is fairly easy with regard to quality and quantity since these are measurable. However, to control and judge attitudes and abilities is a far more difficult task.

Controlling and judging skills:

- Ask for quantity only after repeating the particular skill training a couple of times.
- Increase demand for quantity step by step.
- With regard to quality insist on high standards right from the beginning.
- Note down the scale of judgment (e.g. +/- 0,05 mm off target for "well down") and make it known to the students.

Controlling and judging attitudes and abilities:

- Allow for variations to complete an assignment to discover creative potential.
- Ask for proposals to solve a problem to discover creative potential.
- Attitudes of students show when given opportunities to work creatively and on their own.

Appendix Unit 4 Brainstorming

1. General rules for brainstorming

Brainstorming is one of the most common methods to systematically collect new ideas for problem solving. It is most effective in teaching when problems arise that should be solved in a new way.

The ideal number of participants in a brainstorming session ranges between 5 and 10. Since brainstorming needs an atmosphere of trust and mutual respect, it should be only used when participants are quite familiar with each other. Also everybody should be aware of the rules and stick to them:

- Each idea, each proposal is wanted!
- No critique or judgemental comment is allowed!
- Quantity goes before quality – the more ideas the better!
- Ideas of others should be further developed!

The time of the actual brainstorming should be limited to 5 to 15 minutes. The moderator of the brainstorming should secure the ideas mentioned on a black- or whiteboard, flipchart, manila paper, metacards, overhead or other media.

It is the task of the moderator to ensure that all participants stick to the rules. Most important in this context is that no idea should be ridiculed or criticised however funny or strange the suggestion may be. To ensure this, examples should be given, particularly to groups that are not yet familiar with this method. To freely associate and thus come to even seemingly absurd ideas is not easy when never experienced. However, positive effects will show when brainstormings have been conducted several times.

The moderator should encourage participants to come up with ideas, but should refrain from uttering own ideas too often. When the flow of ideas stops, the brainstorming should be ended.

2. Phases of brainstorming

Problem:	Name the problem and explain it to the participants.
Discussion:	Allow for a short discussion (about 5 minutes). First proposals for solution can already be mentioned.
Brainstorming:	Collecting of ideas – watch the rules!
Assessment:	Judging the ideas.
Solution:	Agreeing on solution and/or further steps of action.

3. Assessment of ideas

Usually a lot of new ideas are collected during a brainstorming. It is part of the rules that these ideas are not assessed during the brainstorming as such. Therefore a lot of ideas appear to be unrealistic, not fit for implementation or, even absurd at first mentioning. However, the collection of ideas is a source of inspiration for finding new solutions and/or new approaches to deal with a problem.

To make use of this collection, each idea now needs to be looked at. Sometimes an idea just needs to be modified to be useful. Here are a number of questions that can be applied during the assessment process and thus help to find out whether ideas are useful or not.

Can the idea be…

…used differently?
…modified?
…changed?
…expanded?
…reduced?
…combined with?
…interchanged?
…replaced?

Usually, in problem solving we tend to stick to known solutions. The challenge sometimes, however, is to find new approaches. To allow for creative and unusual ways of thinking, brainstorming is an appropriate method to bring out new ideas – as long as the rules are followed.

Appendix Unit 9 Mind Map

1. Left and right brain

Mind map is a special visualization method. As the words imply, it tries to capture our thoughts in the form of a map, thus taking special features of the human brain into account. The human brain consists of two sides: the left and the right brain. Each side is linked with special abilities:

Left **L**ogic brain	**R**ight c**R**eativ brain
Speech	Creativity (new combinations)
Calculations	Artistic activity
Intellectual Analysis	Musical ability/Rhythm
Reading	Emotions
Writing	Recognition
Naming	Comprehension
Ordering	Perception of abstract patterns
Sequencing	Spatial abilities
Complex motor sequences	Facial expressions
Critique	Holistic ability
Evaluation	Intuition
Logic	Images
	Color

In traditional teaching and training the left brain is usually given a higher preference. Learning results, however, are much higher when both sides of the brain are stimulated and used: analytical exercises should be combined with creative, expressive activities. When the "weaker", that is less used side of the brain is encouraged to co-operate with the "stronger" side, we will get a synergy effect (1 + 1 = 5!).

2. Mind map and thinking process

Mind mapping is a method to visualize the thinking process. It does not process the thoughts; it merely makes them visible.

Thinking doesn't follow any logic. Our thoughts jump from one topic to the next; they switch from general themes to details, or even abandon a subject completely and go on to a totally new one, perhaps coming back to the previous one at a later stage. We choose a trail, then leave it, continue on another trail and yet, we keep an overview of the whole.

This complex, associative process cannot be made visible with common linear, logically ordered and structured writing techniques. If, however, we want to tap our thinking for producing new ideas, concepts for lectures and manuscripts, for planning activities or for preparing exams, mind map is an ideal technique to keep visible track of our thoughts. Thus, it combines the abilities of the creative side of our brain (intuition, new combinations, images etc.) with the abilities of the logical side (naming, writing, ordering).

3. General rules for mind mapping

- The topic of the mind map is written in the center of a black/white board or a sheet of paper and circled. Central aspects of the topic are written all around the circle – they are the main branches. From these, side branches can be drawn. Whatever comes to the mind can now be written down – branches can be added or completed.

- Since boards cannot be turned around and are mostly shaped horizontally, one should try to seek appropriate position for drawing branches and lines.

- To facilitate better perception, the numbers of main branches should be limited. Also, side branches should not be subdivided too often. Branches and side branches can be differentiated by color. Also, links and connections can be made visible by color. Arrows can indicate related topics.

- If presenting a pre-fabricated mind map, write and draw clockwise. This supports better and easier perception.

- As often as possible, words should be replaced by symbols and pictures. This makes remembering easier and stimulates further thinking.

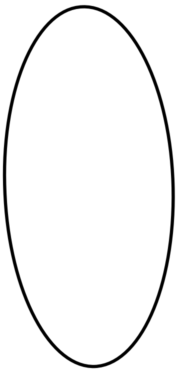

Mind map "Model lesson" – an example

Bibliography

Industrial Occupations Promotion Centre, ZGB (ed.):
„Pedagogical Qualification for Trainers and Instructors in Vocational Training“,
German Foundation for International Development, Mannheim, Germany, 1996

Vogel, Udo (ed):
„Teaching Tools“
IPZ Consult Halle, Germany, 1998

Lefrancois, Guy R.:
„Psychological Theories and Human Learning: Kongor’s Report“
Wadsworth Publishing Company, Belmont/California, 1994 (revised edition)

Further Reading

Andres, Tomas Quintin D.:
„Training a Trainer“
Salesiana Publishers, Inc., Manila, Philippines, 1990

Bustos, Alicia S./Espiritu, Socorro C.:
„Psychological, Anthropological, and Sociological Foundations of Education“ (rev.ed.II)
Katha Publishing Company CO., Inc., Quezon City, Philippines, 1996

Gelb, Michael J.:
„How to Think like Leonardo da Vinci“
Random House, New York, USA, 1998

Hayden, Paul:
„The Learner’s Pocketbook“
Management Pocketbooks Ltd., Hampshire, UK, 1995

Townsend, John:
„The Trainer’s Pocketbook“
Management Pocketbooks Ltd., Hampshire, UK, 1999

Voluntary Service Overseas (VSO) (ed.):
„Creative Training. A User’s Guide“
VSO-Philippines, Quezon City, Philippines, 1998

Criteria for Feedback in Teaching

Kiss

Kick

Kiss

Profession specific skills

Selection of content
- Reduction
- Setting priorities
- Identifying Objectives

Delivery of content
- Content correctness
- Level appropriate for students
- Sequence & structure
- Clarity of explanation

Methodological skills

Methods
- Choice
- Handling

Media
- Legibility
- Handling
- Enhancing understanding
- Enhancing remembering

Further aspects
- Student participation
- Time management
- Structure of lesson
- Innovative potential

Social skills

Articulation
- Voice modulation
- Body language
- Movement

Communication
- Clarity & style
- Interaction teacher – student
- Art of questioning
- Handling of questions

Behavior
- General manner (e.g. calmness, confidence)
- Rapport with students
- Handling of disruptions

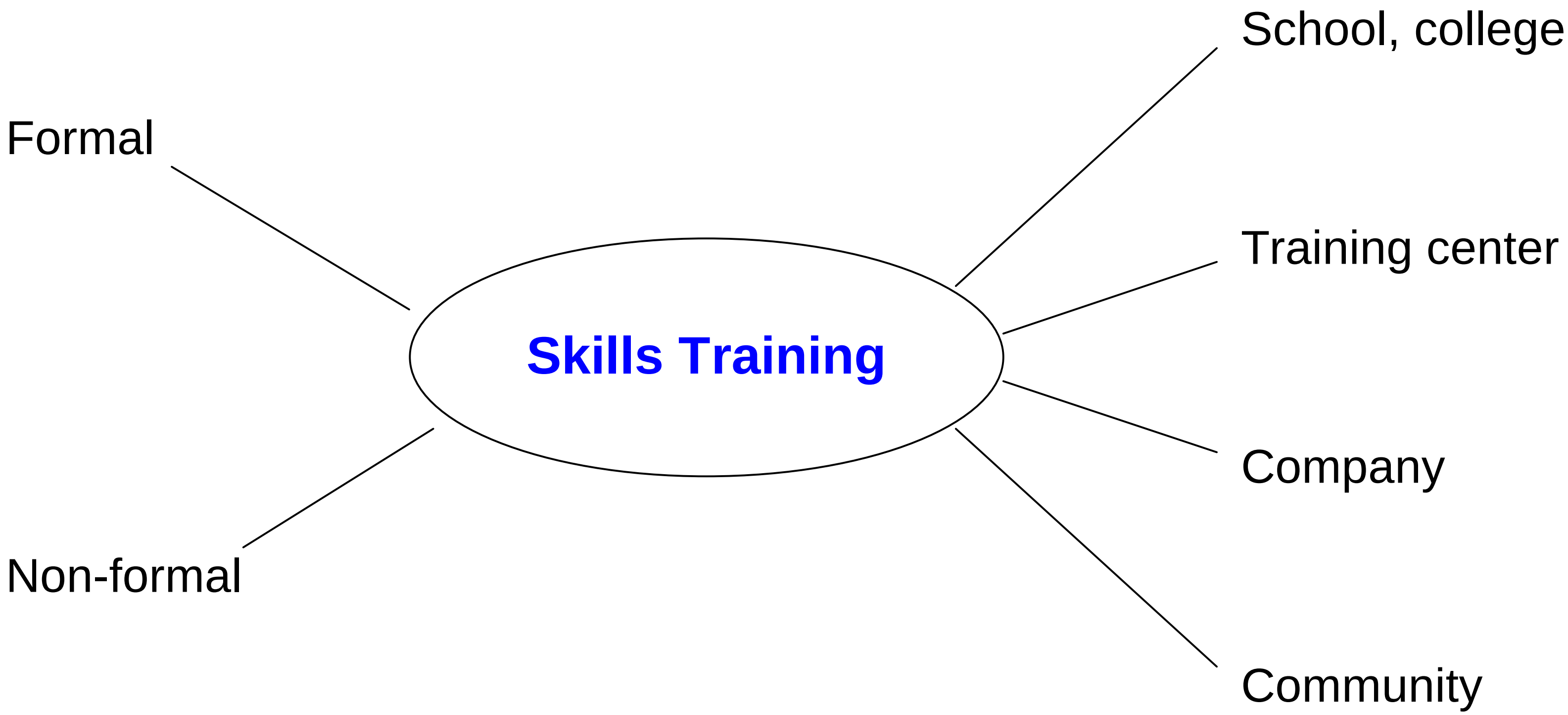
School, college
Formal
Training center
Skills Training
Company
Non-formal
Community

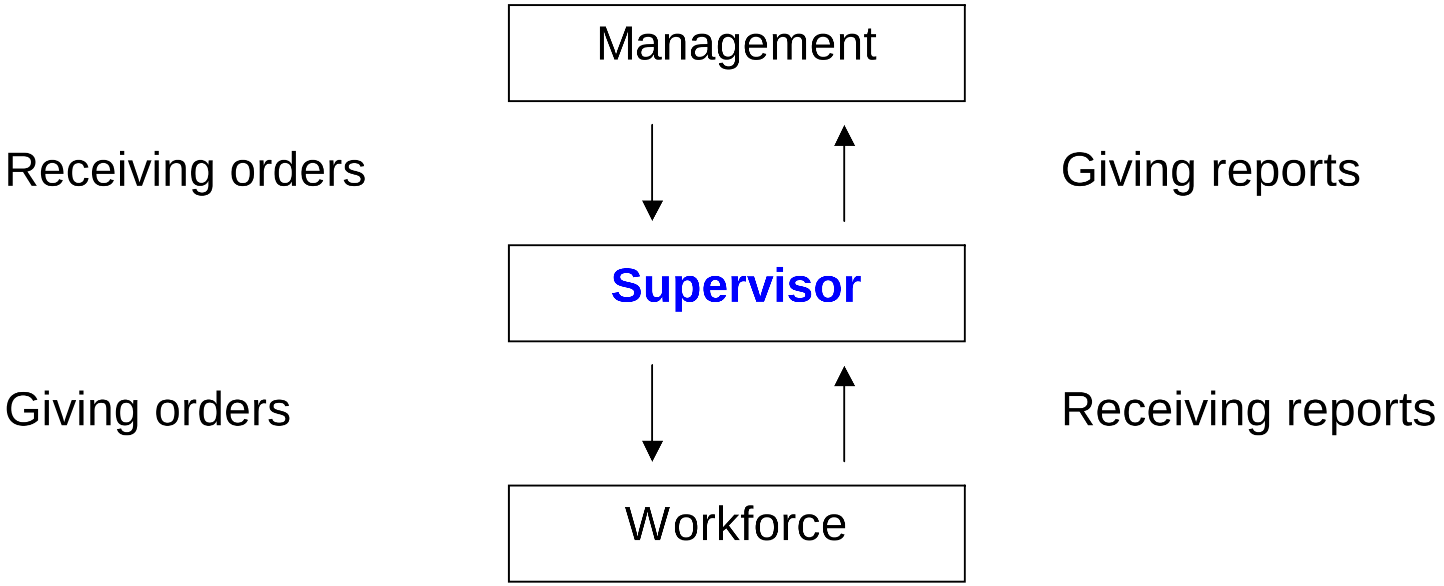
Management
Receiving orders
Giving reports
Supervisor
Giving orders
Receiving reports
Workforce

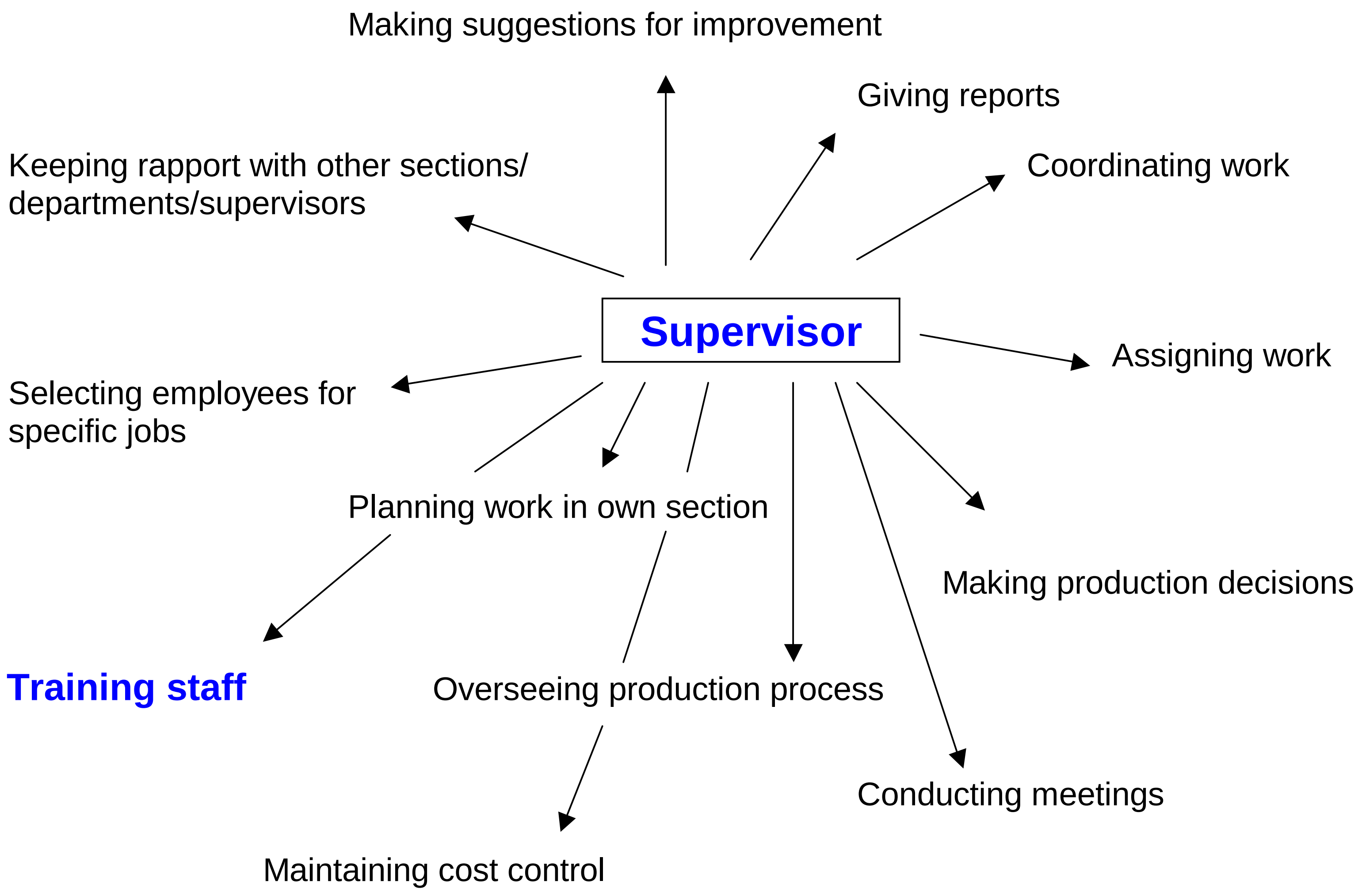
Making suggestions for improvement
Giving reports
Keeping rapport with other sections/ departments/supervisors
Coordinating work
Supervisor
Assigning work
Selecting employees for specific jobs
Planning work in own section
Making production decisions
Training staff
Overseeing production process
Conducting meetings
Maintaining cost control

To train

= to give teaching or practice,

esp. in an act, profession, or skill

= to make ready for a test of skill

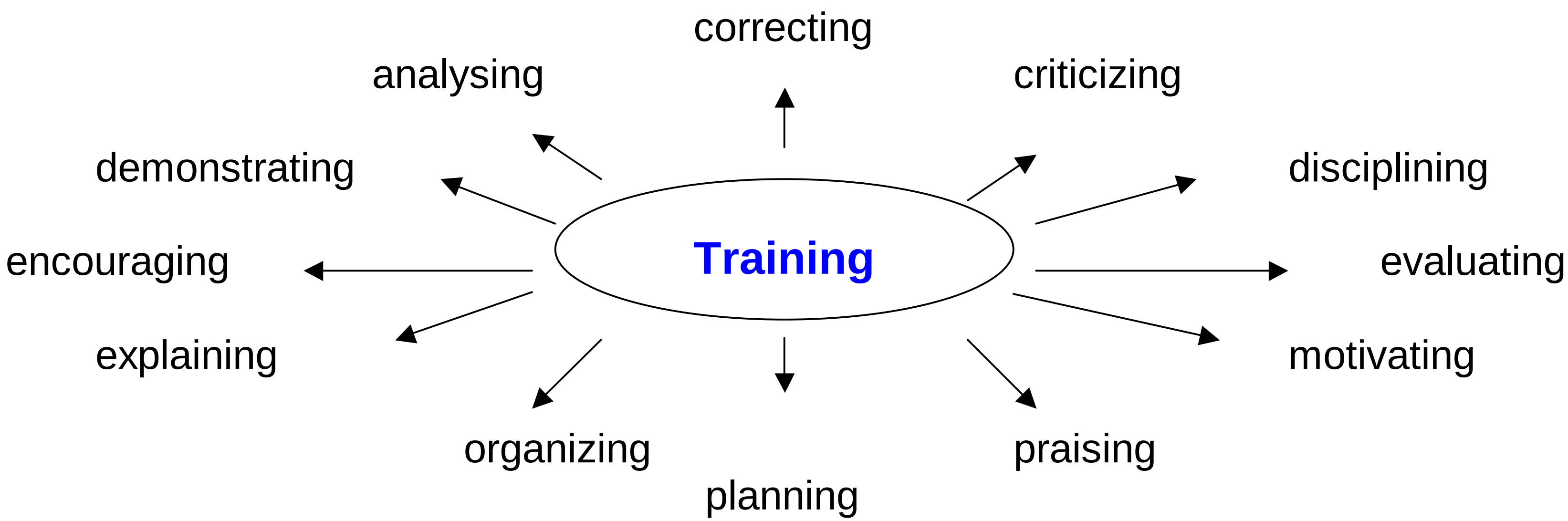
correcting
analysing
criticizing
demonstrating
disciplining
encouraging
Training
evaluating
explaining
motivating
organizing
praising
planning

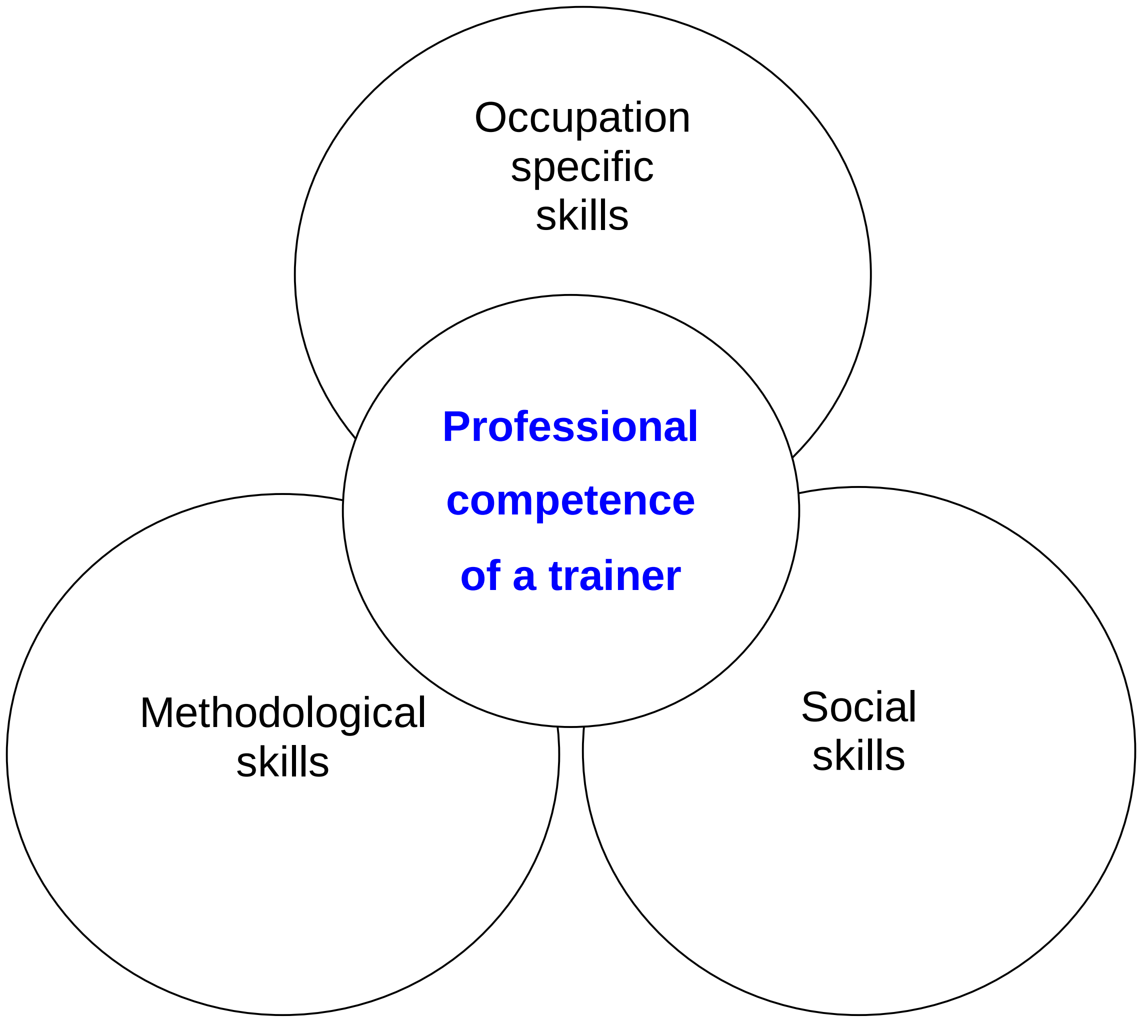
Occupation specific skills
Professional competence of a trainer
Methodological skills
Social skills

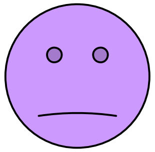

Adaptability	Education	Initiative
Age	Experience	Leadership
Ambition	Habits	Patience
Aptitude	Imagination	Temperament
Dependability	Intelligence	Tolerance
Determination	Interest	Versatility

Make use of **young trainees**'...

- interest in other persons
- urge for experience
- urge for activity
- urge for self-determination & responsibility
- wish for acceptance
- wish for acknowledgement and praise
- wish for applying

- Slower speed of learning
- Less perfect short-term memory -
  better long-term memory
- Reduction in performances of perception -
  greater reaction time

Consider **adult trainees**’

- Greater accuracy
- Greater experience
- Greater attention and perseverance

Advantages

Well kept tools and machines

Well maintained equipment

Maximum and proper use of resources

Good quality of products/service

Low number of rejects/complaints

Faster production

Higher output

High safety standards

High environmental standards

Motivated staff

Learning

= change of behavior

due to experiences

Through learning we acquire new

knowledge

skills

attitudes

patterns of behavior

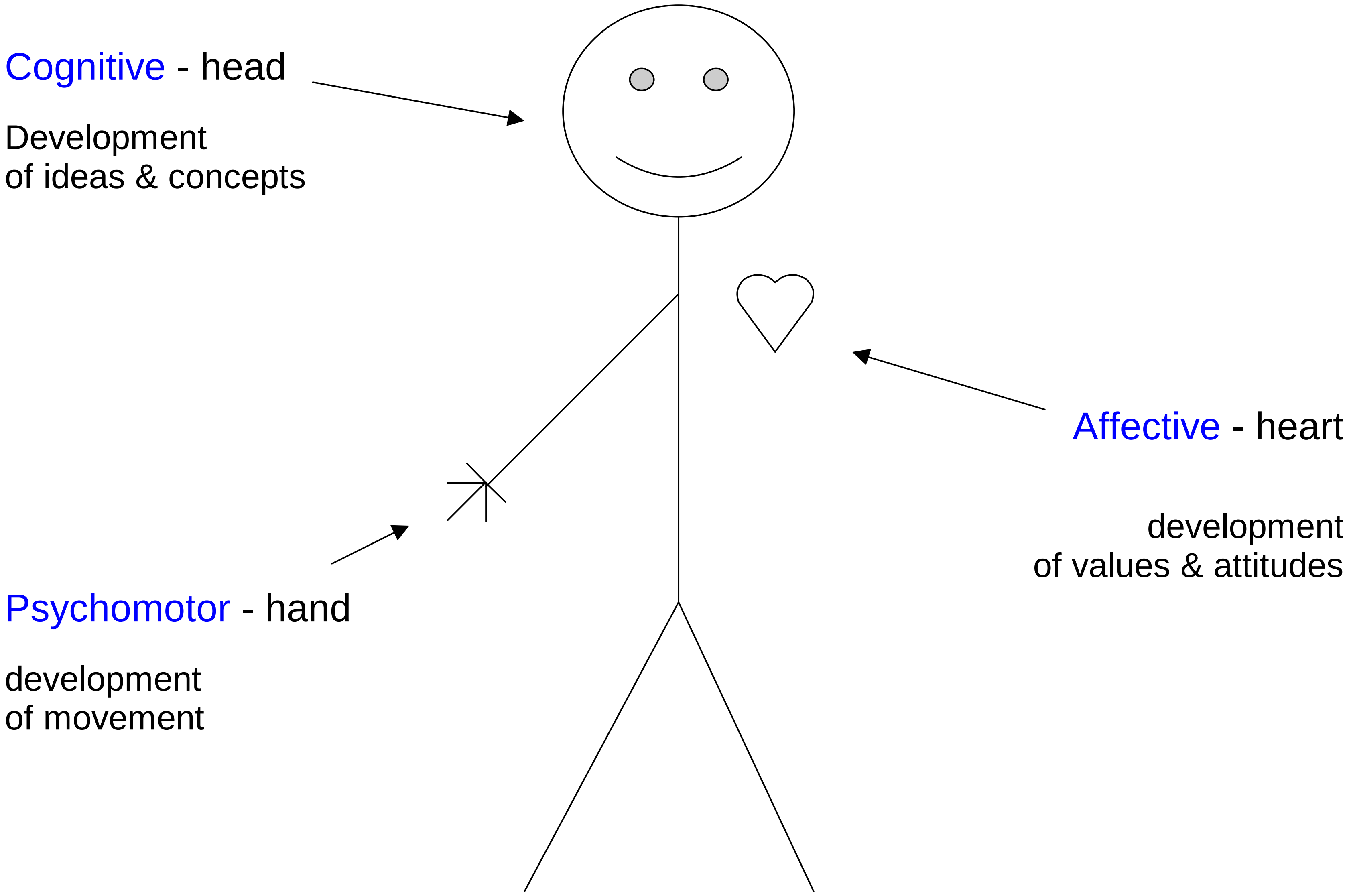
Cognitive - head
Development
of ideas & concepts
Affective - heart
development
of values & attitudes
Psychomotor - hand
development
of movement

G o a l

Learning objectives

- say what the trainee has to know after the instruction or how he/she has to handle something
- list by which help he/she has to do it (by using a dictionary, a tool)
- say how he/she has to do it (in which time, with what precision)

Learning objectives should be…

S	specific	stated in action verbs
M	measurable	indicating minimum level of concept response
A	attainable	according to trainee potential and field of experience
R	realistic	resource- and reality-based
T	time bound	be in coherence with the training timetable

Psychomotor	Cognitive	Affective
perception	knowledge	receiving
set-up	comprehension	responding
guided response	application	valuing
internalized response	analysis	transferring
complex response	synthesis	creating
	evaluation	

To formulate a **training plan** means to identify

- the needs
- the competencies
- the learning modules and learning steps
- the objectives
- the time-frame
- the entry requirements

The importance of good communication

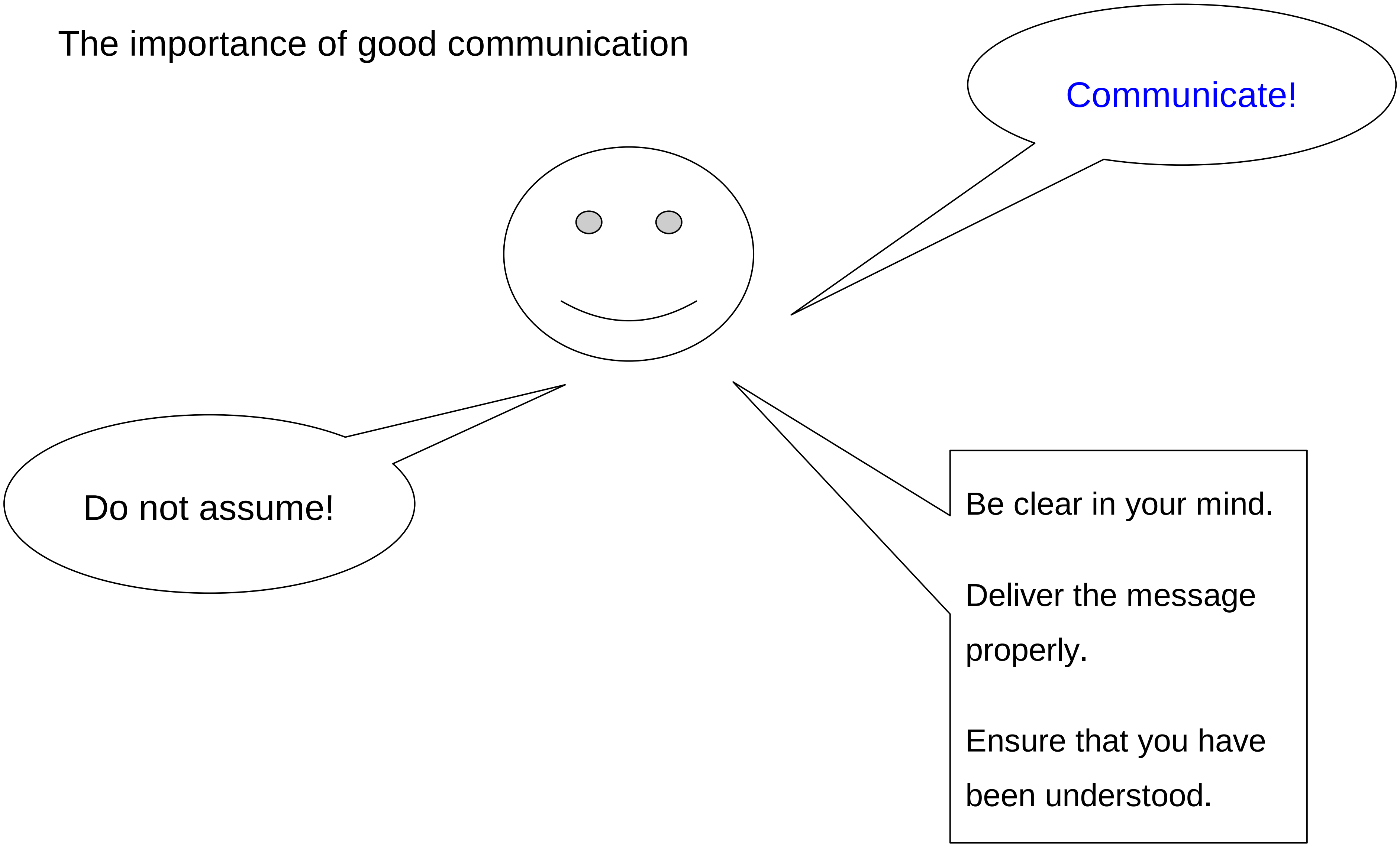

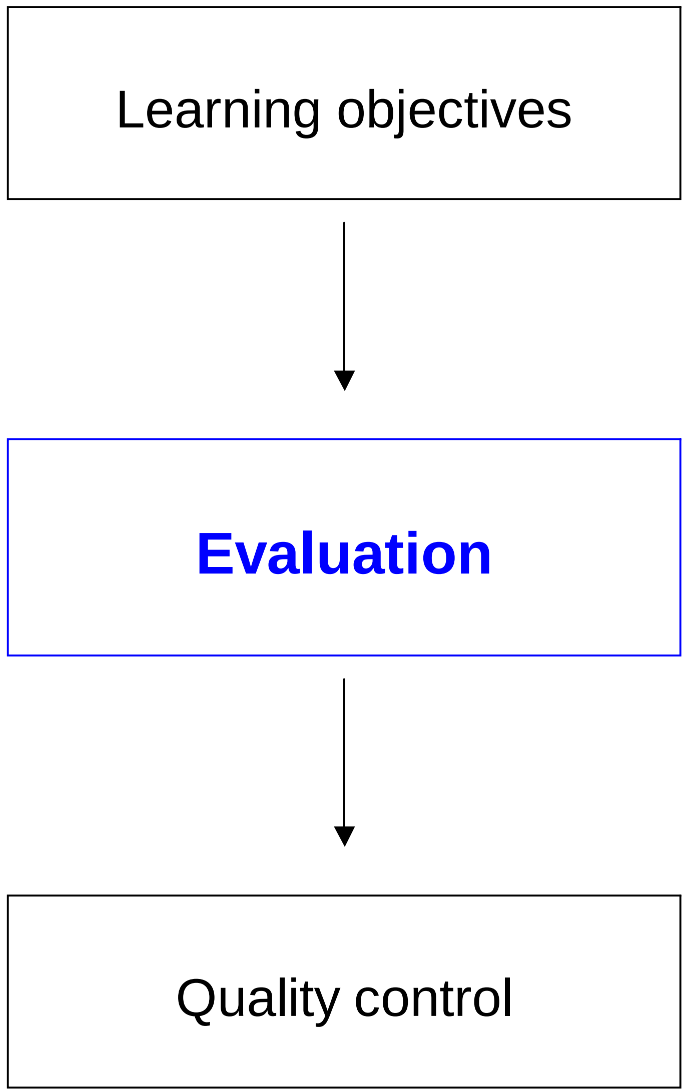
Learning objectives
Evaluation
Quality control

We have not learned something until we have…

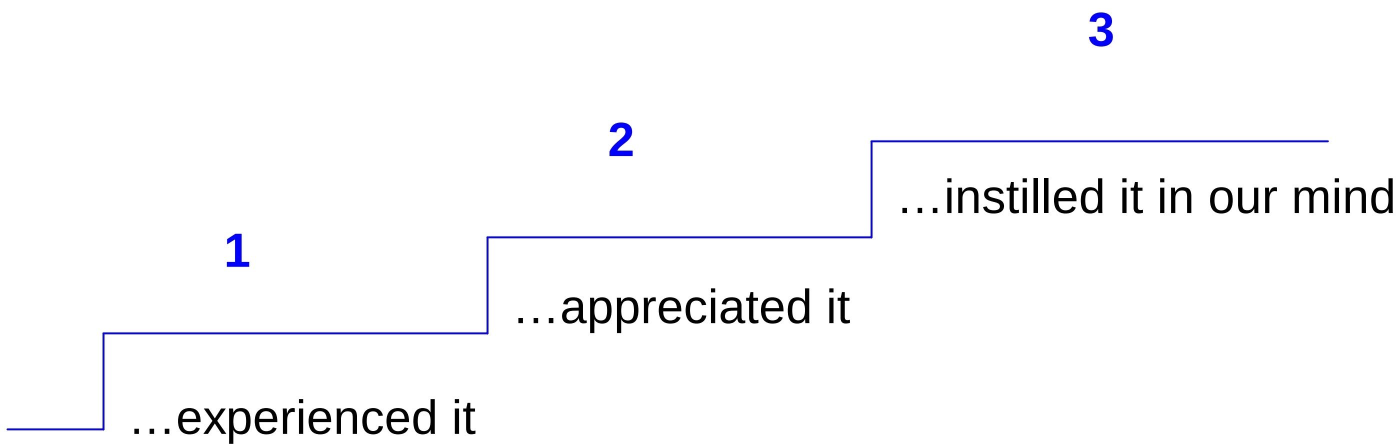

Ways of learning

trial and error

observation and imitation

repetition

instilling something in the mind

insight

repeated perception

adaptation

Method	=	a way or manner of doing something
	=	the use of an orderly system as opposed to luck
Training method	=	a consciously followed way
	=	to achieve specific training objectives

- social form
- sequence of goal-oriented steps
- pedagogical concept

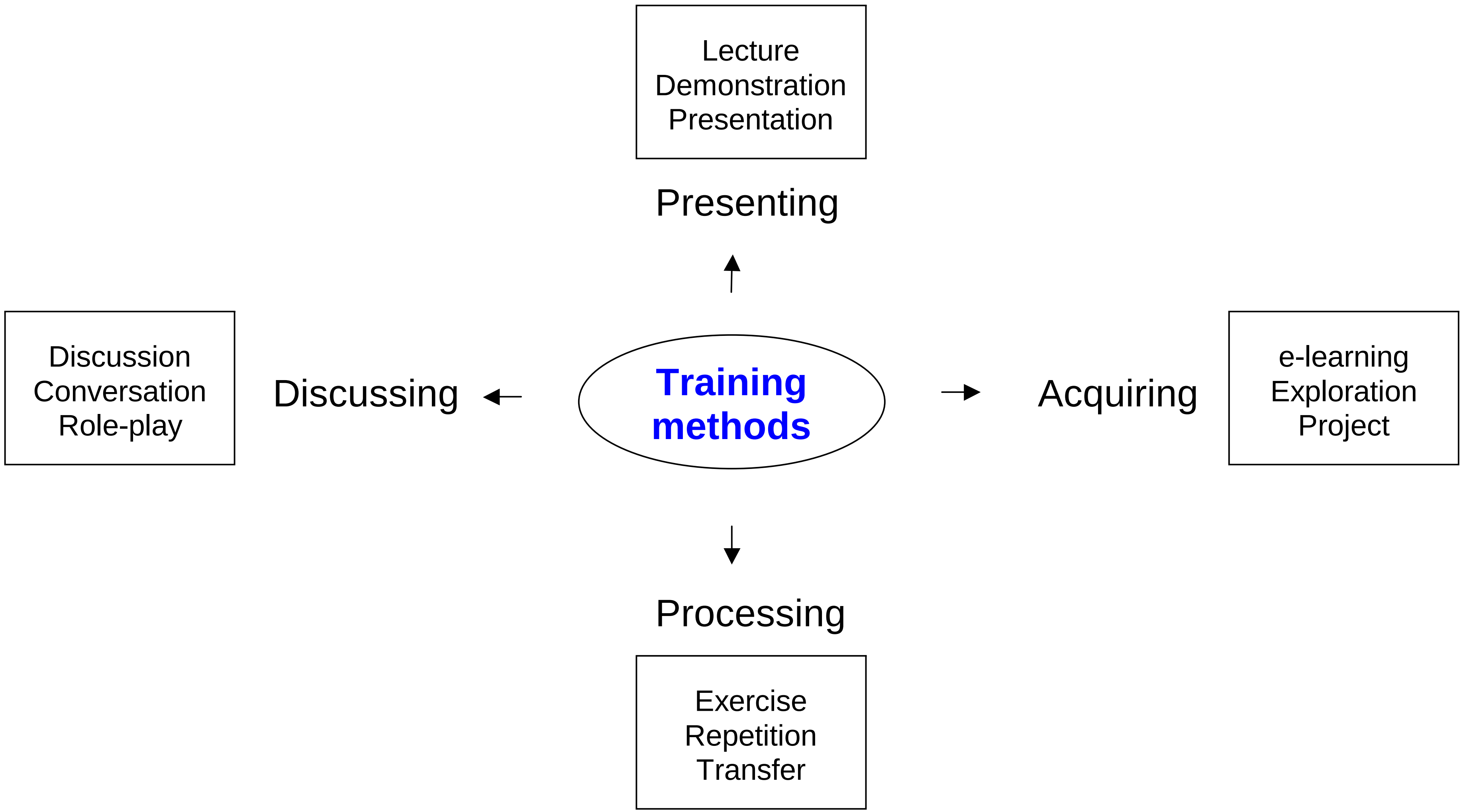
Lecture
Demonstration
Presentation
Presenting
Discussion
Conversation
Role-play
Discussing
Training methods
Acquiring
e-learning
Exploration
Project
Processing
Exercise
Repetition
Transfer

Training methods based on **presenting**

Trainer:	**Trainee:**
Lectures Demonstrates Presents Performs Guides process of perception and thinking	Listens Watches Re-enacts in the mind Imitates Observes Gains understanding, perception, orientation

Training methods based on **discussing**

Trainer:	**Trainee:**
Establishes objectives Explains topic Introduces Asks Gives inspiration Answers Corrects Confirms Summarizes	Answers Asks Contributes experiences Argues Discusses Debates

Training methods based on **acquiring**

Trainer:	**Trainee:**
Introduces problem or task Arranges working method Assesses work attitude Assesses result Assists if necessary	Clarifies objectives Organizes the work Searches for solutions Procures information Solves problems Works out functional solutions Controls results Presents results

Training methods based on **processing**

Trainer:	**Trainees:**
Organizes processing Motivates Imparts exercising and repetition techniques Offers transfer	Memorize learning matter Develop performance speed Develop performance security Transfer learned matter to other topics and areas

The four step method

1. Step	=	Preparation of student
2. Step	=	Demonstration and explanation
3. Step	=	Student activity
4. Step	=	Exercising and strengthening

1. Preparation of trainee

- take the shyness
- motivate
- show the objectives and tasks
- evaluate the knowledge
- familiarize with the work place
- give advice concerning safety

2. Demonstration and explanation

- place trainee facing same direction to the work piece as you
- demonstrate whole procedure in original time
- divide complicated procedures into modules
- repeat demonstration and make single steps visible
- say what you are doing, how and why you (what? how? why?)
- give opportunity to ask questions
- summarize and demonstrate uninterrupted

3. Trainee activity

- encourage trainee to try it on his/her own
- don’t interrupt trainee in first attempts
- make comments only on serious mistakes
- precision is more important than speed
- let trainee say what he/she is doing, how and why

4. Exercising and strengthening

- give enough time to exercise
- acknowledge progress
- control that no mistakes are done during exercising
- change conditions of exercising
- slow adaptation of real working condition

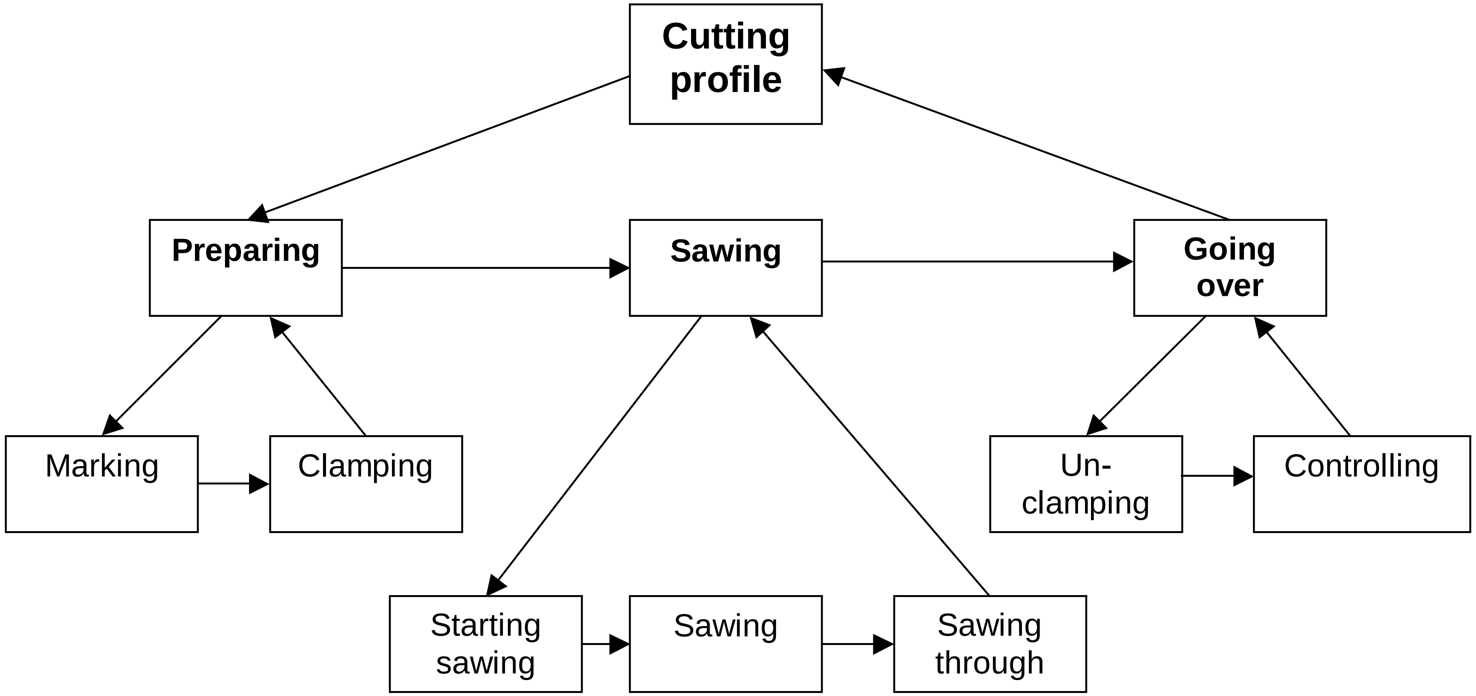

Cutting profile
Preparing
Sawing
Going over
Marking
Clamping
Un-clamping
Controlling
Starting sawing
Sawing
Sawing through

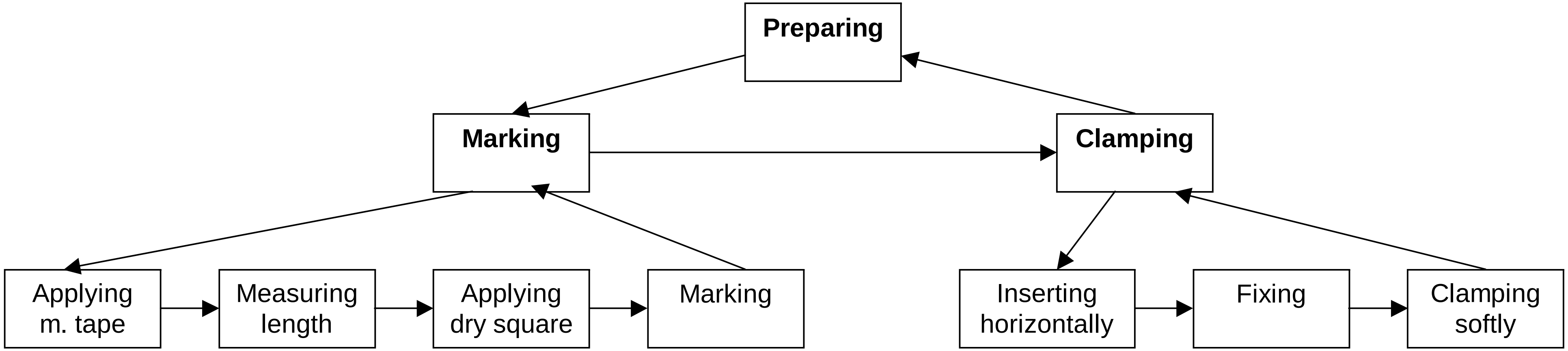
Preparing
Marking
Clamping
Applying m. tape
Measuring length
Applying dry square
Marking
Inserting horizontally
Fixing
Clamping softly

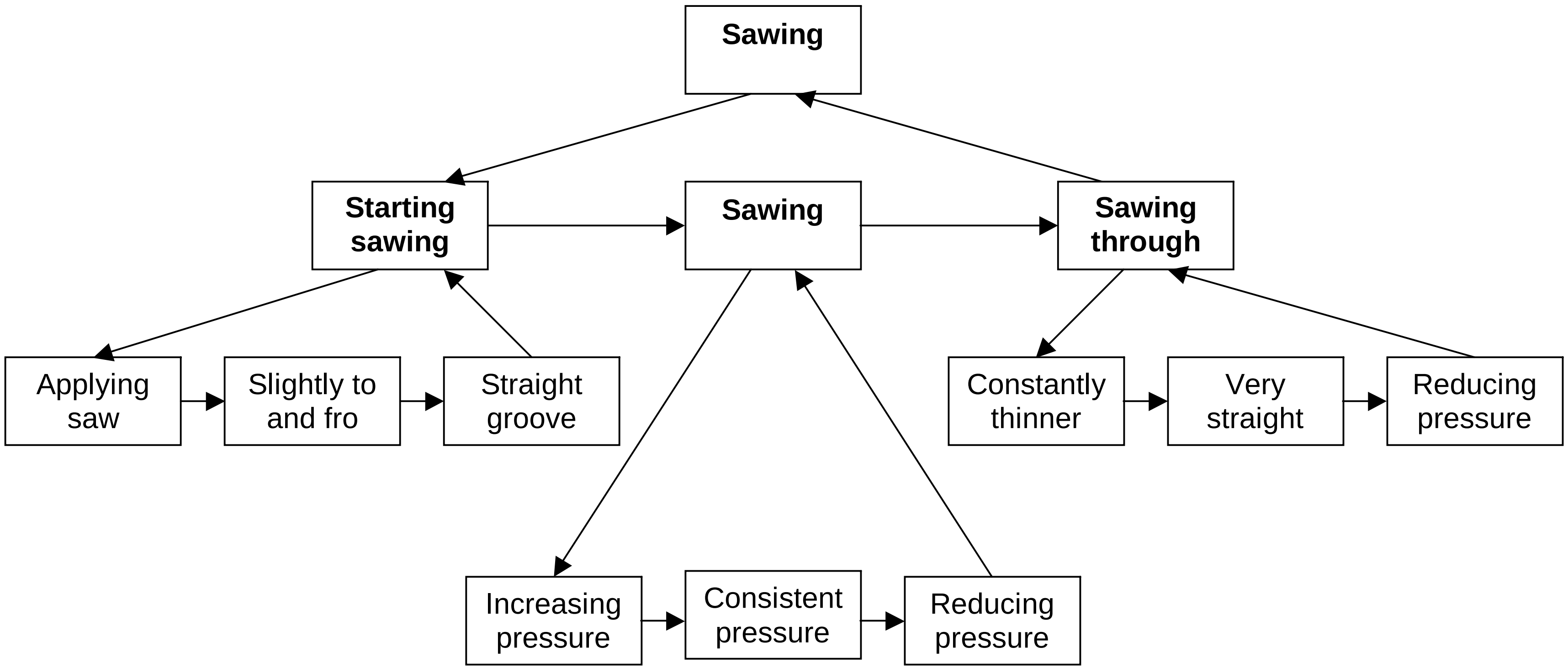
Sawing
Starting sawing
Sawing
Sawing through
Applying saw
Slightly to and fro
Straight groove
Constantly thinner
Very straight
Reducing pressure
Increasing pressure
Consistent pressure
Reducing pressure

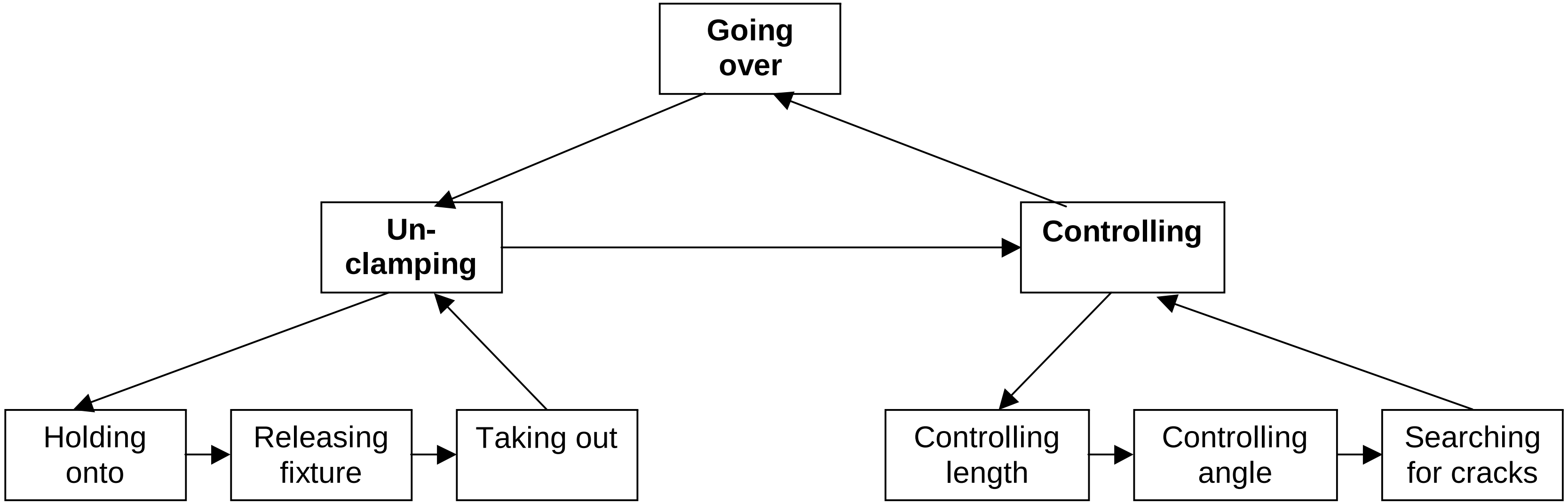
Going over
Un-clamping
Controlling
Holding onto
Releasing fixture
Taking out
Controlling length
Controlling angle
Searching for cracks

„Effective Skills Training“

A three half-days, one whole day workshop

- You are a teacher or trainer at a school, college or training center and are already experienced in training people or have just started to work.
- You are a workshop owner and constantly confronted with the fact that you have to train newly hired staff since they lack the skills required.
- You are part of the human resource department of a company and responsible for the dual training system, DTS, and/or other in-house training activities.
- You are a supervisor at a company and responsible for finding the right people for the right job which often means to train them before they can actually start working.

In short,

- you are one of the people concerned with professional and technical vocational skills training and would like to improve your training skills.

During the workshop „Effective Skills Training“ you will take a closer look at the importance of training, its meaning and what is required of a good trainer. You will examine the relevance of training goals and how they are helpful for evaluation and quality control. You will learn to identify different training methods and understand how you can best make use of them. The seminar, therefore, is focussed around three major areas:

Who – The human factor
What – The training goals
How – The training methods

The inputs consist of general information and basic aspects of learning theory relevant for training. They are given in form of lectures, teacher-student discussions and group work.

The main emphasis of the seminar, however, lies on developing the communication skills of each participant with regard to skills training since these are crucial for any successful training. To achieve the latter, a series of exercises is incorporated into the workshop with some parts being videotaped. Combined together, these exercises lead to one of the most effective skills training methods, the Four-step-method.

By the end of the seminar each participant will be able to deliver a presentation out of his/her field of expertise applying this method. It is hoped that this „hands-on“ approach will also enhance the transfer of what has been learned during the workshop to the various actual training sites.

Number of participants: 8 to 10 (maximum)

Day 1

	Welcome	Introduction of facilitator & participants
Unit 1:	Who – The human factor	Lecture and discussion
Task 1:	Explaining	Preparing a mini-presentation
		Presenting the presentations (presentations will be videotaped)
		Feedback

Day 2

	Repetition	Main results of previous day's inputs
Unit 2:	What – The training goals	Lecture, discussion and group work
Task 2:	Evaluating	Preparing for evaluation of work piece
		Role play "Evaluating trainee's work"
		Feedback

Day 3

	Repetition	Main results of previous day's inputs
Unit 3:	How – The training methods	Lecture and discussion
	The 4-step-method	Watching the video-tapings
		Demonstration
	Summary	Handing out of handouts
Task 3:	Training	Preparing a model training session applying the Four-step-method

Day 4 (whole day)

Task 3:		Presentations/role play “Model training session” (presentations will be videotaped)
		Feedback
	Evaluation	Assessment of seminar
	Closing	Handing over of certificates

Schedule of the days

<u>Day 1 to day 3</u>

Start	8.00 am
Break	according to progress of sessions
End	1.00 pm

<u>Day 4</u>

Start 8.00 am

Breaks and lunch according to progress of sessions

End 5.00 pm

Tasks

Task 1: Prepare a mini-presentation. Choose out of given topics. Work in pairs.
Duration of presentation: 5 – 8 minutes

Task 2: Prepare an evaluation of trainee’s work piece. Work pieces will be provided.
Work in pairs (trainer – trainee).

Task 3: Prepare a model training session applying the 4-step-method.
Choose topic from your field of expertise.
Duration of presentation inclusive Step 3 (student activity): 20 minutes

Effective Skills Training, Day 1

No.	Title	Content/Activity	Material	Time
1	Introduction	Registration, putting on name tags Welcome - Introduction facilitator Introduction of pax (drawing of own portrayal inclusive likings/dislikes w/regard to senses, name/position, expectations for seminar; presentation to group) Outline of seminar/leveling of expectations	Stickers, markers, registration form Sample cartolina, self-portrayal Cartolina, markers Flipchart, handouts	8.00 – 8.45
2	Lecture/Discussion “Who – The Human Factor”	Input on: - General considerations - The supervisor Group activity: - Collecting ideas about activities involved in training Input on: - The trainer Group activity: - Collecting experiences about characteristics of different trainees in general and with regard to age Input on: - The trainee - The trainer – trainee relationship Group activity: - Collecting advantages of well trained staff for company/business Input on: - The human factor as the big difference	Transparencies Manila paper, meta-cards, markers Manila paper, meta-cards, markers Manila paper, meta-cards, markers	8.45 – 9.45

	Break	Working break		10.00 – 10.15

3	Exercise 1 –	Grouping participants into pairs (criteria: at least 1 fluent English speaker per pair)	Strings	9.45 – 10.00
	Introduction	Introducing task: choose one tool out of display & prepare presentation covering: - use - handling - safety - maintenance Both pax are actively involved in presentation	Flipchart Display of various tools related to expertise of pax	
	Preparation	Preparation time: 30 minutes Presentation time: 5 – 10 minutes (min/max)		10.00 – 10.40
	Presentations	Introduction of feedback rules kiss-kick-kiss Drawing of lots for sequence of presentations Distribution of feedback sticks	Feedback sticks Lots	
		Presentations Feedback round (2 presenters – 2 observers – facilitator)	Video cam, tripod, tape	10.40 – 12.00 (3 x 25 min)

	Lunch break			12.00 – 13.00

3	Exercise 1 – Presentations	Energizer Continuation of presentations Summary of presentations		13.00 – 13.15 13.15 – 14.05 (2 x 25 min) 14.05 – 14.15
4	Summary	Each pax draws envelope & tries to answer statement Opportunity to clarify questions related to morning's input	Colored envelopes with prepared statements	14.15 – 14.45
	Break			14.45 – 15.00
5	Lecture/Discussion "What – The training goals"	Input on: - The meaning of learning - The areas of learning Group work or plenary: - Collecting ideas what a trainee needs to learn in a particular field of expertise (plenary or small groups w/related expertise) - Presentation of results Input on: - The importance of learning objectives - Formulating learning objectives - Classifying learning objectives Group work or plenary: - group results according to three domains - put them into sequence - additional: formulate objectives - Presentation of results	Transparencies Manila paper, meta-cards, markers Laminated meta-cards "cashier" Meta-cards, markers	15.00 – 16.30
6	Summary/Feedback	Summary on input Oral feedback round on first day	Ball	16.30 – 17.00

Effective Skills Training, Day 2

No.	Title	Content/Activity	Material	Time
1	Review	Each pax draws one strip and explains why s/he agrees or disagrees with statement Opportunity to clarify questions related to previous day's input	Strips with prepared statements	8.00 – 8.30
2	Lecture/Discussion "What – The training goals	Input on: - The training plan - The importance of communication - Evaluation and quality control	Samples of training plans	8.30 – 9.00
3	Exercise 2 – Introduction/Preparation Presentations	Introducing task: role play on giving feedback on work piece of trainee, dealing with respective behavior Assigning roles of trainers – trainees *Trainer*: choose one model work-piece & study description *Trainee:* study your assigned role & own work-piece Preparation time: 15 minutes Presentation time: 5 – 10 minutes (min/max) Suggestions for observation Presentations Feedback round (Trainee – trainer – observers - facilitator) General recommendations for dealing with particular trainee character Explaining assessment criteria for particular work-piece	Flipchart Display of various work-pieces with project descriptions Description of trainee characteristic & faulty equivalent of chosen work-piece	9.00 – 9.20 9.20 – 10.00 (2 x 20 min)

	Break			10.00 – 10.15

3	Exercise 2 – Presentations	Continuation of presentations Summary of criteria/procedure of feedback		10.15 – 11.15 (3 x 20 min) 11.15 – 11.30
4	Lecture/Discussion “How – The training methods”	Input on: - The three steps of learning - Different ways of learning - The meaning of training method	Transparencies	11.30 – 12.00

	Lunch break			12.00 – 13.00

4	Lecture/Discussion “How – The training methods”	Energizer Group activity: - Collecting methods used in training - Grouping methods into 4 categories - Analyzing roles of trainer – trainee for each category Watching video with day 1 presentations Summary of video presentations	Manila paper, meta-cards, markers Transparencies TV, video cam, tape	13.00 – 13.15 13.15 – 14.00 14.00 – 15.00

	Break	Working break		14.45 – 15.00

4	Lecture/Discussion “How – The training methods”	Input on: - The Four-step-method Demonstration workshop area: - Volunteer is asked to shorten wooden profile 2 cm - Analysis of observed demonstration - Analysis of actions involved - Repetition of demonstration according to action-analysis Input on: - Final conclusions	Transparencies Bench vise, wooden profile, saw, dry square, measuring tape, pencil; Posters sequence-of-actions-analysis	15.00 – 16.00
5	Exercise 3 – Introduction Preparation	Introducing task: - Choose skill - Carry out action analysis - Prepare instruction for model presentation using 4-step-method. Presentation time: 15 – 20 minutes (min/max) Handing out of seminar handouts	Work sheets “Action analysis” Seminar handouts	16.00 – 16.50
6	Outlook/Feedback	Outlook on day 3 of seminar Feedback on seminar day 2 by pax setting points	Barometer for content, methods, atmosphere Points	16.50 – 17.00

Effective Skills Training, Day 3

No.	Title	Content/Activity	Material	Time
1	Introduction	Establish sequence of presentations Assign trainee for role-play Present feedback sequence (trainer – trainee – observers – facilitator) & rules (kiss – kick – kiss)	Lots for sequence Feedback sticks	8.00 – 8.15
2	Presentations “Model training session 4-step method”	Training session presentation Feedback round Duration presentation: 15 – 20 minutes Feedback round: 20 minutes max	Choice of pax Video cam, tripod, tapes	8.15 – 10.20 8.15 – 8.55 8.55 – 9.35 9.35 – 10.15
	Break			10.15 – 10.30
2	Presentations “Model training session 4-step method”	Continuation of presentations	Choice of pax Video cam, tripod, tapes	10.30 – 12.00 10.30 – 11.10 11.10 – 11.50
	Lunch break			12.00 – 13.00

2	Presentations “Model training session 4-step method”	Energizer Continuation of presentations	 Choice of pax Video cam, tripod, tapes	13.00 – 13.15 13.15 – 15.15 13.15 – 13.55 13.55 – 14.35 14.35 – 15.15

	Break			15.15 – 15.30

2	Presentations “Model training session 4-step method”	Continuation of presentations	Choice of pax Video cam, tripod, tapes	15.30 – 16.50 15.30 – 16.10 16.10 – 16.50
3	Evaluation Graduation	Summary of training Oral feedback round Written evaluation Handing over of certificates/closing of seminar	 Ball Feedback sheets Certificates	16.50 – 17.15 17.15 – 17.30

Effective Skills Training, Day 1

No.	Title	Content/Activity	Material	Time
1	Introduction	Registration, putting on name tags Welcome - Introduction facilitator Introduction of pax (drawing of own portrayal inclusive likings/dislikes w/regard to senses, name/position, expectations for seminar; presentation to group) Outline of seminar/leveling of expectations	Stickers, markers, registration form Sample cartolina, self-portrayal Cartolina, markers Flipchart, handouts	8.00 – 8.45
2	Lecture/Discussion “Who – The Human Factor”	Input on: - General considerations - The supervisor Group activity: - Collecting ideas about activities involved in training Input on: - The trainer Group activity: - Collecting experiences about characteristics of different trainees in general and with regard to age Input on: - The trainee - The trainer – trainee relationship Group activity: - Collecting advantages of well trained staff for company/business Input on: - The human factor as the big difference	Transparencies Manila paper, meta-cards, markers Manila paper, meta-cards, markers Manila paper, meta-cards, markers	8.45 – 9.45

	Break	Working break		10.00 – 10.15

3	Exercise 1 – Introduction	Grouping participants into pairs (criteria: at least 1 fluent English speaker per pair) Introducing task: choose one tool out of display & prepare presentation covering: - use - handling - safety - maintenance Both pax are actively involved in presentation	Strings Flipchart Display of various tools related to expertise of pax	9.45 – 10.00
	Preparation	Preparation time: 30 minutes Presentation time: 5 – 10 minutes (min/max)		10.00 – 10.40
	Presentations	Introduction of feedback rules kiss-kick-kiss Drawing of lots for sequence of presentations Distribution of feedback sticks	Feedback sticks Lots	
		Presentations Feedback round (2 presenters – 2 observers – facilitator)	Video cam, tripod, tape	10.40 – 12.45 (5 x 25 min)
4	Summary/Feedback	Summary on input/presentations Oral feedback round on first day	Ball	12.45 – 13.00

Effective Skills Training, Day 2

No.	Title	Content/Activity	Material	Time
1	Review	Each pax draws envelope & tries to answer statement Opportunity to clarify questions related to previous day's input	Colored envelopes with prepared statements	8.00 – 8.30
2	Lecture/Discussion "What – The training goals"	Input on: - The meaning of learning - The areas of learning Group work or plenary: - Collecting ideas what a trainee needs to learn in a particular field of expertise (plenary or small groups w/related expertise) - Presentation of results Input on: - The importance of learning objectives - Formulating learning objectives - Classifying learning objectives Group work or plenary: - group results according to three domains - put them into sequence - additional: formulate objectives - Presentation of results	Transparencies Manila paper, meta-cards, markers Laminated meta-cards "cashier" Meta-cards, markers	8.30 – 10.00

	Break			10.00 – 10.15

2	Lecture/Discussion “What – The training goals”	Input on: - The training plan - The importance of communication - Evaluation and quality control	Samples of training plans	10.15 – 10.45
3	Exercise 2 – Introduction/Preparation Presentations	Introducing task: role play on giving feedback on work piece of trainee, dealing with respective behavior Assigning roles of trainers – trainees Trainer: choose one model work-piece & study description Trainee: study your assigned role & own work-piece Preparation time: 15 minutes Presentation time: 5 – 10 minutes (min/max) Suggestions for observation Presentations Feedback round (Trainee – trainer – observers - facilitator) General recommendations for dealing with particular trainee character Explaining assessment criteria for particular work-piece Summary of criteria for feedback	Flipchart Display of various work-pieces with project descriptions Description of trainee characteristic & faulty equivalent of chosen work-piece	10.45 – 11.10 11.10 – 12.45 (5 x 18 min)
4	Summary/Feedback	Summary on input/presentations Pax set points with regard to content, atmosphere, methods	Barometer for content, methods, atmosphere Points	12.45 – 13.00

Effective Skills Training, Day 3

No.	Title	Content/Activity	Material	Time
1	Review	Each pax draws one strip and explains why s/he agrees or disagrees with statement Opportunity to clarify questions related to previous day's input	Strips with prepared statements	8.00 – 8.30
2	Lecture/Discussion "How – The training methods"	Input on: - The three steps of learning - Different ways of learning Partner work: - Find example for each way of learning Input on: - The meaning of training method Group activity: - Collecting methods used in training - Grouping methods into 4 categories - Analyzing roles of trainer – trainee for each category Watching video with day 1 presentations	Transparencies Cut postcards, work sheet Manila paper, meta-cards, markers Transparencies Tv, video cam, tape	8.30 – 9.45 9.45 – 10.45

	Break	Working break		10.00 – 10.15

2	Lecture/Discussion “How – The training methods”	Summary of video presentations Input on: - The Four-step-method Demonstration workshop area: - Volunteer is asked to shorten wooden profile 2 cm - Analysis of observed demonstration - Analysis of actions involved - Repetition of demonstration according to action-analysis Input on: - Final conclusions	Transparencies Bench vise, wooden profile, saw, dry square, measuring tape, pencil; Posters sequence-of-actions-analysis	10.45 – 12.00
3	Exercise 3 – Introduction Preparation	Introducing task: - Choose skill - Carry out action analysis - Prepare instruction for model presentation using 4-step-method. Presentation time: 15 – 20 minutes (min/max) Handing out of seminar handouts	Work sheets “Action analysis” Seminar handouts	12.00 – 12.50
4	Summary/Feedback	Summary on input/presentation Feedback on seminar day 3	Feedback sheet sun rays	12.50 – 13.00

Effective Skills Training, Day 4

No.	Title	Content/Activity	Material	Time
1	Introduction	Establish sequence of presentations Assign trainee for role-play Present feedback sequence (trainer – trainee – observers – facilitator) & rules (kiss – kick – kiss)	Lots for sequence Feedback sticks	8.00 – 8.15
2	Presentations “Model training session 4-step method”	Training session presentation Feedback round Duration presentation: 15 – 20 minutes Feedback round: 20 minutes max	Choice of pax Video cam, tripod, tapes	8.15 – 10.20 8.15 – 8.55 8.55 – 9.35 9.35 – 10.15
	Break			10.15 – 10.30
2	Presentations “Model training session 4-step method”	Continuation of presentations	Choice of pax Video cam, tripod, tapes	10.30 – 12.00 10.30 – 11.10 11.10 – 11.50
	Lunch break			12.00 – 13.00

2	Presentations “Model training session 4-step method”	Energizer Continuation of presentations	 Choice of pax Video cam, tripod, tapes	13.00 – 13.15 13.15 – 15.15 13.15 – 13.55 13.55 – 14.35 14.35 – 15.15

	Break			15.15 – 15.30

2	Presentations “Model training session 4-step method”	Continuation of presentations	Choice of pax Video cam, tripod, tapes	15.30 – 16.50 15.30 – 16.10 16.10 – 16.50
3	Evaluation Graduation	Summary of training Oral feedback round Written evaluation Handing over of certificates/closing of seminar	 Ball Feedback sheets Certificates	16.50 – 17.15 17.15 – 17.30

Participant Reaction Evaluation Form

Use the scale 1 to 5 to express your reactions to the course based on the following statement: (Please circle only one choice for each statement.)

Strongly DISAGREE 1	Disagree 2	Neither 3	Agree 4	Strongly AGREE 5

Overall, I was satisfied with this seminar.	1	2	3	4	5
My knowledge and skills increased as a result of this seminar.	1	2	3	4	5
I can apply what I learned in this seminar to my work.	1	2	3	4	5
It was easy for me to understand the seminar content.	1	2	3	4	5
The methods used to deliver the seminar content were effective.	1	2	3	4	5
I enjoyed the parts with active involvement of the participants.	1	2	3	4	5
Material for the participants was adequate.	1	2	3	4	5
The instructor explained the subject clearly.	1	2	3	4	5
The instructor answered my questions clearly.	1	2	3	4	5
The instructor was supportive and helpful.	1	2	3	4	5
I got good advice from other participants throughout the seminar.	1	2	3	4	5
I would recommend this seminar to my colleagues.	1	2	3	4	5

What new things/changes can you apply to your job – immediately and after some time?

____

____

____

What parts of the seminar did you enjoy most? Why?

____

____

____

What parts of the seminar did you not enjoy? Why?

____

____

____

Further recommendation/comments not covered by this evaluation form:

____

____

(Continue on the back if you need more space!)

Thank you for your answers!

Deutscher
Entwicklungsdienst

Effective Skills Training

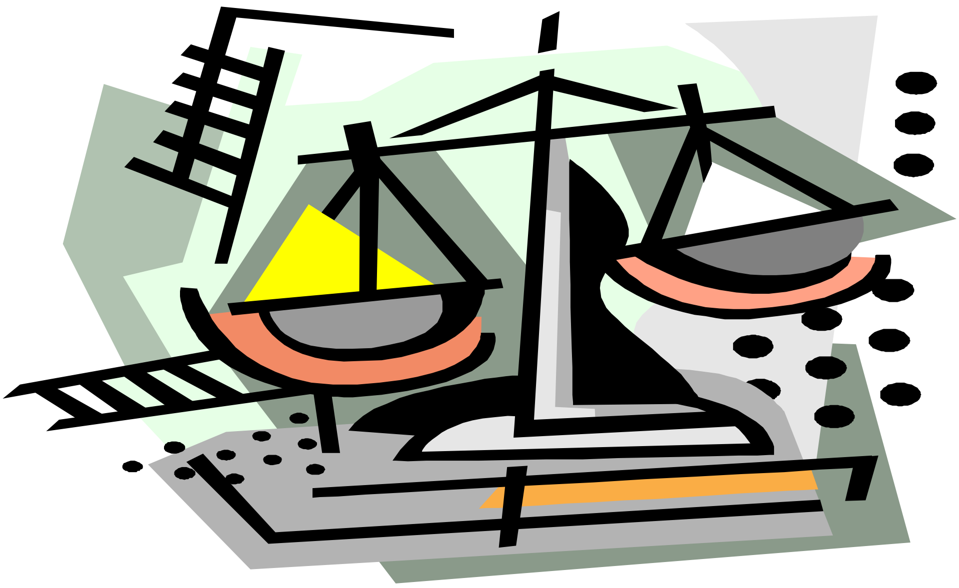

A seminar for teachers and trainers in professional and technical vocational skills training

Content

Introduction

This handout comes along with the workshop „Effective Skills Training". It is meant to cover the main inputs given by the facilitator during the training sessions. It can be read during and after the training to help recall and better understand what has been covered during the sessions. As such, it also provides general information relevant for all who are involved in skills training: trainers, company supervisors, workshop owners, and human resource department staff.

However, it cannot substitute the training as such. While the handout focusses on three main areas – the human factor, the training goals and the training methods -, the emphasis of the seminar itself is on developing the communication skills with regard to training. Though the respective exercises of the workshop are, of course, related to the content of this handout, they are not documented in here: It is rather the actual experience of the workshop than the reading of the written material that facilitates the learning for the participants.

Nonetheless, it is hoped that the material provided can also help to enhance people's awareness of the importance of training and its numerous benefits. Further material promoting training in general and in-plant training in particular is available in form of a cd, vcd or video which can be obtained through the ded. More information on this can be found on the ded homepage www.ded.ph.

Cornelia Frettlöh

Consultant of the German Development Service, ded, to the
University of Southern Philippines Foundation, USPF
Salinas Drive, Lahug, Cebu City
January 2002

Unit 1 The Human Factor

1. General considerations

Skills training today takes place in a variety of set-ups: it can be part of formal and non-formal training, it can be conducted at school, at a vocational training center, at community level, at the factory or in a workshop. Schools, colleges and training centers are usually expected to hire professional part-time or full-time trainers who, apart from the skills training, may also be in charge of classroom instruction.

formal

non-formal

Skills Training

school, college

training center

company

community

Within the private sector, the situation is quite different. If at all, only the bigger companies conduct their own in-house training and, therefore, employ their own in-house trainers. Their job isn't really much different from the jobs of trainers at schools and training centers with the one exception that the respective training measures are tailor-made for the specific needs of a company.

Small- and medium-sized enterprises may also acknowledge the need for in-house training, but to employ a full-time trainer is out of the question for most of them: it may not only be beyond their reach financially, it would perhaps also not meet their real training needs. In that scenario, it is usually the supervisor who will be the one in charge of training. In the same way, also the owner of a business is a trainer with the sole difference to the supervisor that he/she has no management above him/her but simply represents it him-/herself.

Both situations have in common that their training approach is very often not systematically organised, particularly in small enterprises. Skills training there just „happens"; whenever the need arises, the respective person is shown how to perform a certain skill and then again left on his/her own. Depending on the goals, this may be sufficient, but even then it is important to recognize basic principles of skills training in order to achieve high learning results.

As for DTS-programs (Dual Training System), it is envisioned that the training be divided among a training institute and a company, the latter at least providing the exposure to real working conditions, and thus allowing the trainee to apply what he/she has learned. Once again, it is most likely at the supervisory level where the responsibility for the training will lie. Let us therefore first have a look at the supervisor in the company.

2. The supervisor

The role of a supervisor within a company can be described as that of a mediator: positioned between management and workforce, he/she has to relate management decisions to the workforce and ensure their implementation, but also communicate workers' concerns to management.

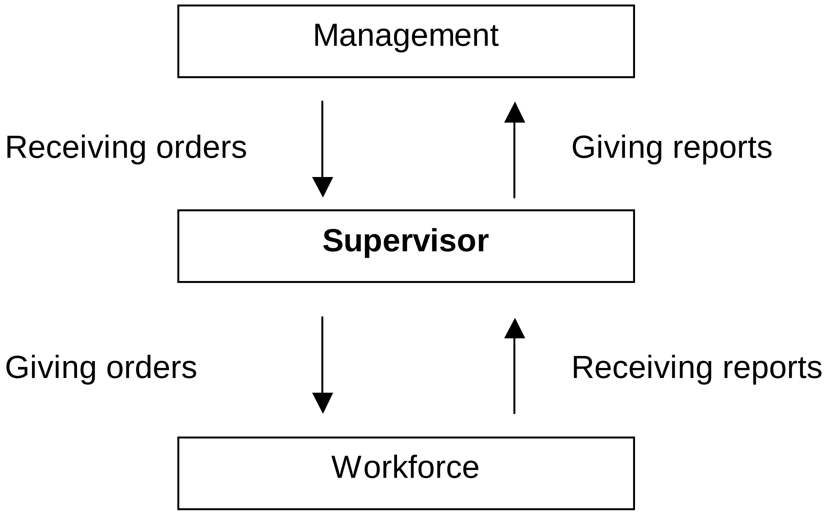

The tasks and responsibilities range from making suggestions for improvement, giving reports, conducting meetings, coordinating work with other sections and keeping rapport with other supervisors and departments such as HRD, personnel/staff; they include planning work, overseeing the production process, making production decisions, maintaining cost control, assigning work to workers and selecting employees for specific jobs. Doing the latter, however, may very well lead to another crucial responsibility: training. Finding the right people for the right job sometimes can simply mean training people.

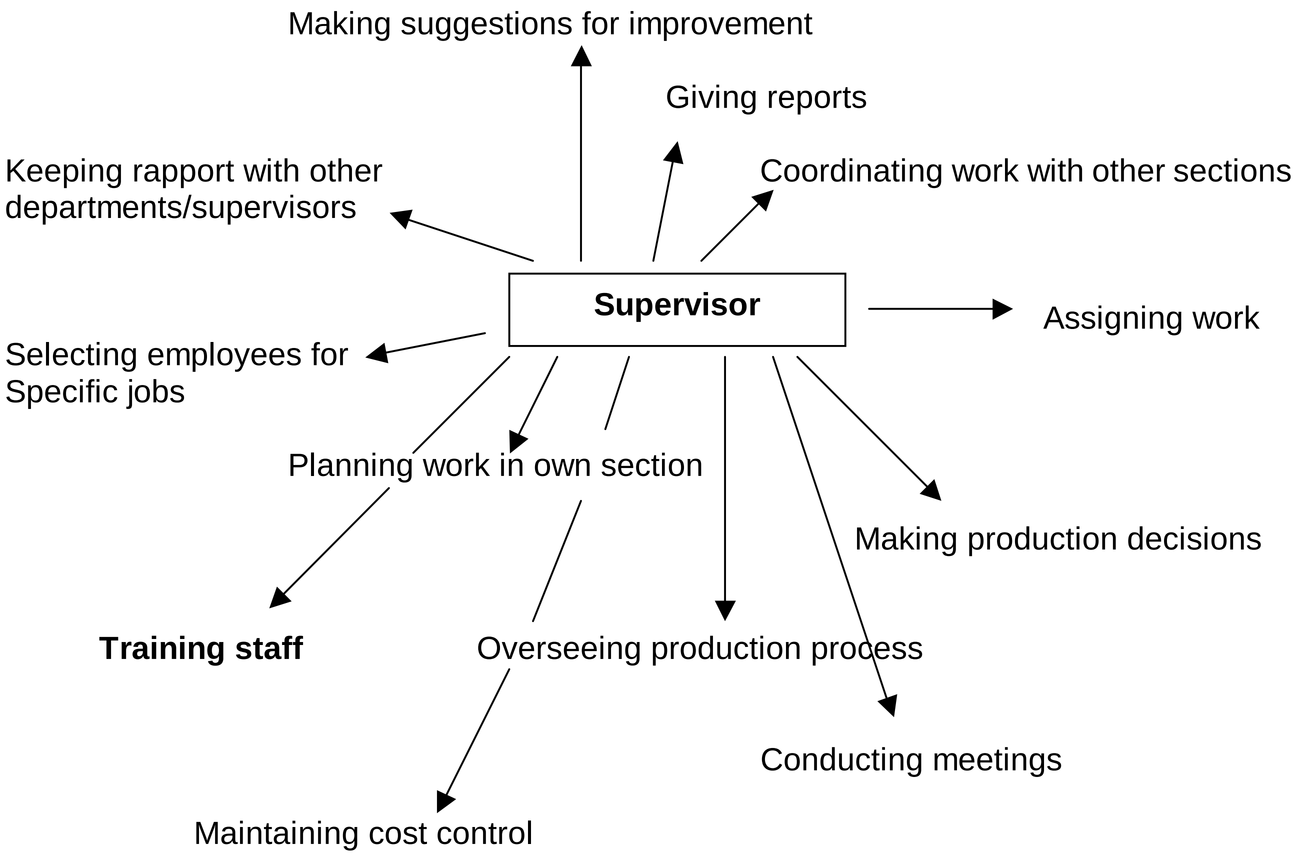

To fulfill the duty of a supervisor, he/she relies to a great extent on the skills of the workers in his/her section since they are the ones who actually do the job. To meet deadlines, to ensure high quality in production, you not only need the proper tools and equipment but people who can handle them skillfully. It is the human factor that makes the difference!

Unfortunately, the labor market does not always provide the staff needed, be it the specialist, be it the operator of a particular machine. As a supervisor, you will be among the first to be confronted with this problem; management will expect you to come up with suggestions for solutions or even expect you to handle it all on your own. For example, they may hire people who meet a minimum level of requirements but still cannot perform the job expected from them unless their skills are being upgraded. Management may also introduce new equipment and send you to a training, and, in return, expect you to train others who will also operate these machines. In any case, chances are that, being a supervisor, you will have to train other people at some point in your working life.

Becoming a trainer, however, should not just be another add-on responsibility of a supervisor. Management has to be aware that quality training is time consuming and therefore proper adjustments have to be made, for the trainers as well as for the trainees. To understand all aspects involved in training, let us now have a look at what it takes to be a good trainer.

3. *The trainer*

The main task of a trainer is to train. When we look into the dictionary, it provides the following definition:

to train	=	to give teaching or practice, esp. in an act, profession, or skill
	=	to make ready for a test of skill

Taking a closer look we will find that training involves quite a range of different activities, such as:

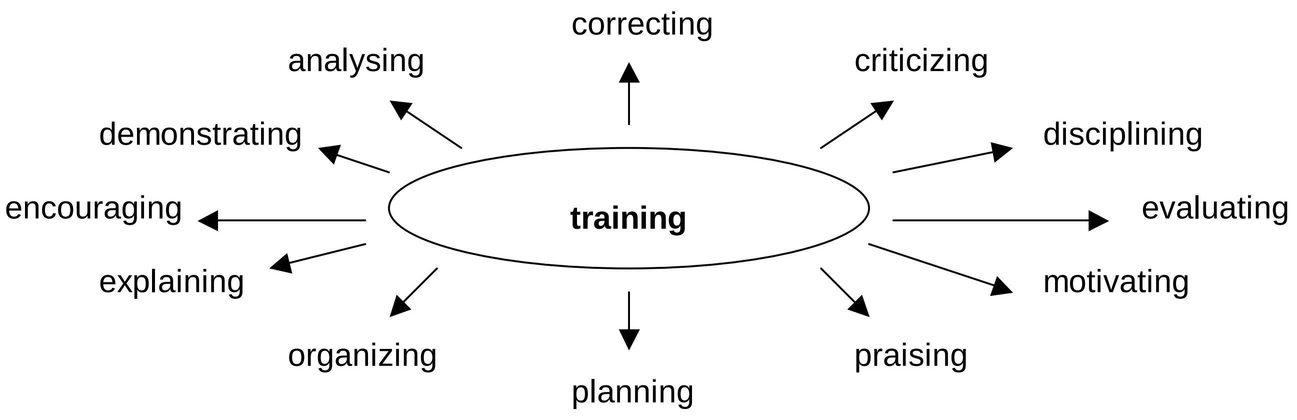

As for demonstrating, it can mean many things, from welding over sawing to cutting, baking, drilling, painting, sewing, typing etc. What is being demonstrated will depend on the skill to be learned. The first requirement for you as a trainer therefore is that you can perform all the occupation specific skills involved in a particular profession and therein meet professional standards. You must also be equipped with the relevant specialized knowledge of your respective craft to be able to explain what you are doing and to give further background information whenever needed.

Analysing, correcting, evaluating, organizing and planning are some of the methodological skills you need as a trainer. You will have to organize training, decide on the sequence, plan and execute it, monitor progress of your trainees, evaluate skills and knowledge and correct mistakes. You may even have to deliver short presentations at times and make use of visual aids for better understanding.

Last, not least, you must be able to display social skills, that is communicating with and relating to others. You have to be able to explain, to encourage, criticize, motivate and praise. Without communication skills and the ability to handle different kinds of people, your professional expertise, e.g. as a welder, is hardly of any use when it comes to training. Unless you can communicate the crucial points to your trainees and explain them how and why something is done in a particular fashion, you will not be successful as a trainer. The professional competence of a trainer therefore comprises three areas:

The similarities to what is required of a good supervisor are quite obvious: He/she also needs technical, methodoligacl and social skills. The focus, of course, is different. While the trainer focusses his/her attention on the training process and the trainees, the supervisor is mainly concerned with all aspects of the production process. Nonetheless, as a trainer you also have to keep the production process in mind, in a way.

Skills training is not a purpose in itself. It is related to the needs of the industry and business sector, thus leading to or even creating (self-)employment. A thorough analysis of the skilled manpower needed in the respective business' sectors should be the foundation upon which the various training schemes of training centers and schools are build. For you as a trainer this means permanently updating your own knowledge on the latest developments in your field of expertise, be it new techniques, be it new procedures or equipment and machines. If you are not company based, staying in close touch with the industry of the area is an indispensable necessity, since the ultimate goal of skills training is to enhance the job opportunities of the trainees. Which leads us to the next set of people involved in training: the trainee.

4. The trainee

Each trainee is different. While some can easily assimilate some subject matters, they encounter difficulties in other areas. As a trainer, you have to consider the individual traits and characteristics which differentiate each trainee and cause each to react in his/her own peculiar way. Some of these individual differences are:

Adaptability	Education	Initiative
Age	Experience	Leadership
Ambition	Habits	Patience
Aptitude	Imagination	Temperament
Dependability	Intelligence	Tolerance
Determination	Interest	Versatility

As a trainer, you also have to adapt the training to the background of the respective trainees. This means being considerate of the level of knowledge they have, whether they are slow learners or fast learners and how they learn best. To recognize the different needs of different people in a training context is a crucial requirement for a trainer since it is his/her responsibility to facilitate learning for all trainees.

As was already said, the differences between learners depend on a wide variety of factors, one of them being age: in general, the ability to learn increases rapidly from early childhood to the early twenties, after which it declines very slowly up to about the age of 45. Somewhere around 55, a steeper decline begins. While manipulative skills are usually learned faster by the younger ones, middle-aged people can be more adept at learning due to their better background of knowledge and experience. Despite of age, continuous learning has become a necessity today because of the constant and rapid changes in procedures, processes etc.

4.1. The young trainee

Youth, the time between childhood and adulthood (10/12 to 18/20 years), is the period in which the growing human being attempts to become an independent personality. The central conflicts of young people stem from that intermediate position. This transition period and the physical changes involved often lead to uncertainty and problems of orientation. The young people’s difficulties with their own development frequently then lead to difficulties with their environment, particularly with adults. The group of persons of their own age (peer group), on the other hand, is an important aid to orientation for young people since it is also the training ground for behavior in adult society.

When dealing with young people as trainees, the following aspects should be considered:

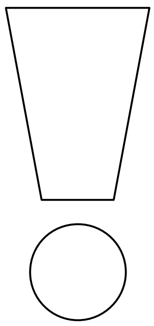

- Young people want to be taken seriously. They would like to take on responsibility.
- They have a great urge for action and wish to press forward into the material sectors of adults but without being patronized.
- They are looking for role models in adults, but are still uncertain in dealing with them. Adults, in particular teachers and trainers, must try to break down this barrier.

Young people enjoy learning whenever

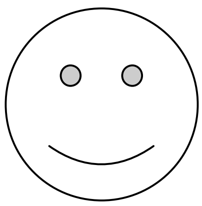

- Teaching makes link to their interest in other persons
- Teaching is eventful and diversified (urge for experience)
- They can do something themselves (urge for activity)
- They can help in planning and organizing and do things on their own (urge for self-determination & responsibility)
- They are invariably accepted with all their idiosyncrasies
- Minor achievements are also acknowledged and praised
- They can apply what they have learned to genuine problems within their life

4.2. *The adult trainee*

Adults generally consist of personalities which are relatively complete. They have increasing experience of life and clearer ideas of themselves and their goals than young people. They are accustomed to acting as persons who are independent and free, who are fully capable of running a business and making sound judgements. All in all, they have developed habits which they are not easily willing to abandon or have questioned. This commitment becomes stronger, the older one becomes.

The tendency towards consistency, towards maintaining and retaining opinions and attitudes can pose a serious problem, though, when it comes to learning. For learning always means change of behavior due to experience: new knowledge, new skills or new attitudes lead to new behavior. It may therefore be difficult for them to accept new approaches, techniques etc. and thus „unlearn“ previous behavior.

It is also a fact that earlier learning experience governs the nature of acquiring and processing new learning experience, that is what we have learned and how we learned. Depending on the experience, previous learning can have a positive or a negative effect; an adult will be motivated by hope of success or fear of failure and be a confident or rather apprehensive learner due to his/her individual learning history. To accept new forms of learning is not impossible, but will take time.

As a trainer, you have to take those aspects into consideration when dealing with adult trainees. Adults also show a:

- Slower speed of learning, therefore require more time
- Less perfect short-term memory, but usually a better long-term memory for matters concerning the profession
- Reduction in individual performances of perception, greater reaction time

On the other hand, they show a:

- Greater accuracy and improved care in the process of learning
- Greater general and professional experience and experience of life with more points of contact for learning
- Greater attention and perseverance

Deutscher Entwicklungsdienst

5. The trainer - trainee relationship

In the transition period between childhood and adulthood, young people develop ideas about who they might be and what they want to become, and orient themselves thereby according to models and prototypes. The latter are generally abstract concepts or characteristics – they prescribe how one is to live, for example. Models can be persons in their own personal environment, such as teachers, trainers, parents or older persons, also personalities of public importance.

A model is only effective when young people can observe and copy how adult models master problems which they themselves also have. For you as a trainer that means that you should avoid giving the impression of being able to do „everything“, and do it perfectly. It may even lead to defiance on the part of the trainees as there is too great a distance between you and them: you are too far away to be a model and you also may cause a feeling of inferiority – I can never be like this model.

Though young people want to be taken seriously, that doesn't mean to treat them in exactly the same way as other adults. On the contrary, it may tempt them to have exaggerated opinions of themselves and even result in considerable disciplinary problems. The art of relating to them means finding the right tone for the right situation and person. For your young trainees you will be a model, a supervisor, and even a counselor at times.

As towards the adult learner, wherever possible you behave in a partner-like and friendly manner; you express criticism carefully and fairly and you show that you have confidence in his/her capability. In your training approach you utilize supportive and reinforcing elements to make learning an experience of success from the very beginning. As much as the young trainee needs to be encouraged, this holds also true for the adult learner.

6. The human factor as the big difference

As we already said, it is the human factor that makes the difference: Whether staff is well-trained or not, will show in many ways. Though quality training is defenitely time consuming and, of course, a cost factor, it is also an investment in the future that will surely pay off. Particularly when it comes to in-house training, a proper cost analysis will show that it is always to the advantage of the business to ensure that their employees meet the qualifications required for a particular job.

When comparing the performance of two imagined companies with the same kind of set-up except for staff – the one working with well-trained people, the other working with people who are not equipped for the jobs that they perform – the advantages of training show easily:

Advantages

Well kept tools and machines

Well maintained equipment

Maximum and proper use of resources

Good quality of products/service

Low number of rejects/complaints

Faster production

Higher output

High safety standards

High environmental standards

Motivated staff

Unit 2 The Training Goals

1. The meaning of learning

In the previous chapter we came to the conclusion that the human factor makes the big difference with regard to production or service: we need the right people to do the right jobs. To ensure that this happens, it is important to specify what a person is required to know and must be able to do for a particular work placement. If we cannot find someone who meets these specific requirements, we then will have to start training somebody: we will have to find a person who is willing to learn. We also said that continuous, life-long learning is a must since there are always changes – new procedures, new machines, new technologies. So learning is really an integral, necessary part of our working life. But what really is learning?

Learning has been defined in various ways by different scientists. The essence of all these definitions, however, could be put as such: Learning means that we change our behavior due to experiences. This definition excludes changes of behavior due to chemical influence, like drinking beer or taking drugs, changes due to momentarily physical strain, like being tired or, changes due to genetics while growing up. On the other hand it is broad enough to include the many different ways of what and how we learn.

Definition

Learning = change of behavior due to experiences

2. The areas of learning

When learning is defined as change of behavior, the fact that somebody has learned something should be seen in his/her behavior after learning. If, for example, a trainee does not change his/her behavior, then it is impossible for the trainer to know whether he/she has really learned anything. This is quite obvious when we look at an example:

- Previously, he/she was not able to explain a band saw, but now he/she can!
- Previously, he/she was not able to cut wood with a band saw, but now he/she can!
- Previously, he/she was not able to cut accurately, but now he/she can!

Looking at this example, we can hereby also identify different types of learning: Through learning we can acquire knowledge (he/she understands the functions of a band saw and therefore can explain it), skills (he/she can operate the band saw and therefore cut wood) and attitudes (he/she values precision and therefore cuts accurately)**.**

So through learning we can acquire new…

…knowledge

We **know** more than before.

…skills

We **do** things better than before.

…attitudes

We hold a different **opinion** than before.

which leads to new…

…patterns of behavior

We **behave** differently than before.

Learning often is quite complex and involves all areas. Let us, for example, look at driving: What actually happens when we learn how to drive a car? What knowledge is acquired? What skills are acquired? What attitudes are acquired? We can easily see that all three areas are involved which then lead to the actual behavior of how we drive a car. These different types of learning are also known as the cognitive, psychomotor and affective type. Pestalozzi, a Swiss educator, speaks of "Head, hand and heart". He recommends that successful teaching and learning has to activate all three types equally.

The **cognitive** learning (head) is concerned with the development of ideas and concepts. It covers much of what academic learning demands. It involves, among other things, understanding, reasoning and problem solving.

Development
of ideas & concepts

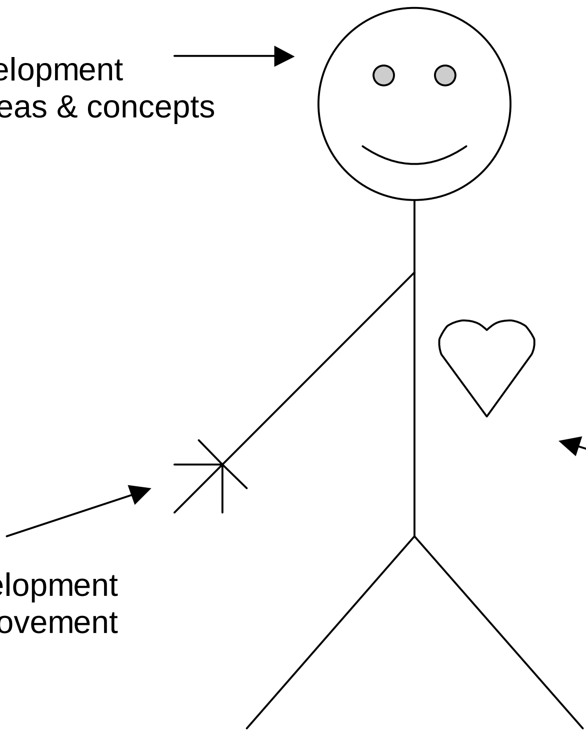

Affective (heart) learning is important for the development of values and attitudes. It involves emotions and affect. The most important factor in teaching appreciation is, of course, the teacher.

development
of values & attitudes

development
of movement

Psychomotor (hand) learning involves understanding the external world through the senses and the muscles. It varies from large muscular to fine motor skills based mainly on perception. This type of learning is particularly crucial in vocational training.

Though skills training mostly is concerned with psychomotor learning – the hand -, also cognitive and affective learning – the head and the heart – are involved in this process, else the training may not meet the desired result or even fail altogether. In the example above, the trainee may be able to operate the band saw, but since he/she lacks the right attitudes, the cuts are not being carried out accurately. Another example: when a trainee learns how to type, he/she not only has to be able to strike the keys on the typewriter in a certain pattern, but also has to display a sound knowledge of spelling and grammar as well as the general willingness to work accurately and with care. If not, the typed document might be full of mistakes and the sheet crumpled or even torn.

3. The importance of learning objectives

As we know already, training means to give teaching or practices, esp. in a profession or skill. It also means to make people ready for a test of skill. In vocational training the skills to be taught range from welding over metal work, woodwork, to tailoring, secretarial work and so on. The goal of the respective training courses therefore, is to produce professional welders, metal workers etc. Even though this is already specific with regard to the craft involved, the goal is still far too general to be of use in daily training.

Each craft in itself is usually composed not just of one, but many different skills. For example, before a plumber can install a water pipe system, he/she has to take the measurement, cut the pipes, cut the threads and so on. To become a plumber then means to learn a whole variety of different skills. To ensure that all aspects of a profession are covered, the overall training goal needs to be broken down into more specific learning goals or objectives. This holds true not only for training courses with a broader goal, it is also a requirement for the learning process of complex procedures that involve more than just one skill.

As a trainer, it will usually be your task to define what are the single learning steps involved in a particular learning process and to put these single steps into a logical sequence. To formulate precise learning objectives also helps you to control whether your training has been successful or not. In a way, the clear formulation of learning objectives is the key starting point for any successful skills training.

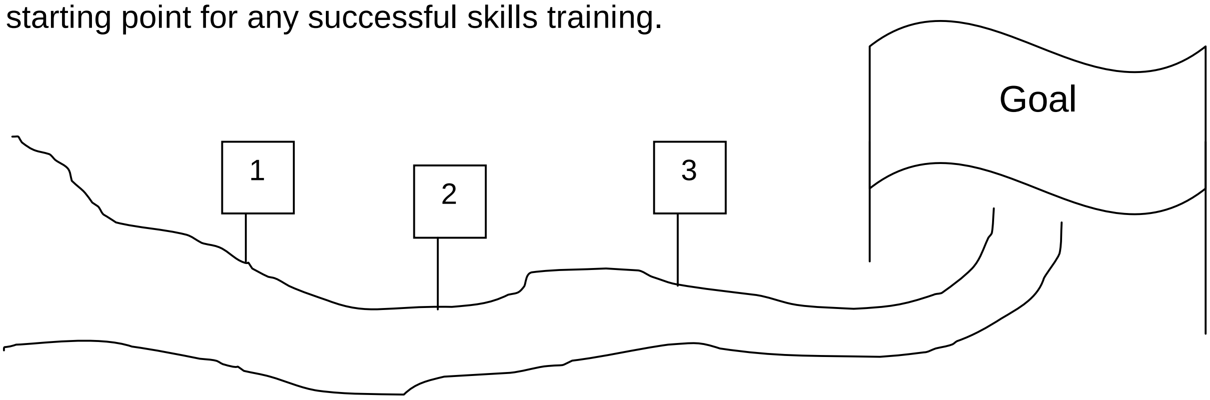

4. Formulating learning objectives

When learning means change of behavior due to experiences, successful training can be measured according to the behavior of the trainees after a learning experience. To assess whether someone has learned something or not, therefore requires a clear statement about what is being learned (content) and how it is being demonstrated or performed (behavior) by the end of the learning process. The precise formulation of learning objectives, with an integrated description of behavior and the contents of learning, is crucial for the learning process. It reduces misunderstanding concerning training measures and thus helps both parties involved – the trainer and the trainee.

Learning objectives

- say what the trainee has to know after the instruction or how he/she has to handle something
- list by which help he/she has to do it (by using a dictionary, a tool)
- say how he/she has to do it (in which time, with what precision)

We should inform the trainees about the instructional objectives in advance. We should tell them criteria to enable them to assess or control on their own whether they have mastered the instructional objectives.

Objectives for a certain learner group need not to be identical for all learners. They can and sometimes must be different for subgroups or individual learners according to their different levels. Such objectives may be different with regard to the amount of subject matter covered and/or with regard to the level of achievement.

If you want to formulate objectives for all learners, you have to find objectives suitable for the poorest trainees. That does not mean to abandon established standards – to let pass trainees for the next level of training when they do not meet the required qualifications.

Only if you define your objectives precisely in advance it is possible to assess and evaluate the achievements of your trainees adequately to prior fixed norms. If not, you run the risk of judging out of the moment, which might not be fair to your trainees' performances, resulting in either over- or underrating them.

Learning objectives should be…

S	specific	stated in action verbs	S
M	measurable	indicating minimum level of concept response	M
A	attainable	according to trainee potential and field of experience	A
R	realistic	resource- and reality-based	R
T	time bound	be in coherence with the training timetable	T

5. Classifying learning objectives

Objectives can be classified in various ways. A useful way to classify them when it comes to actual training is by their degree of difficulty and by their areas. According to the three areas of learning, we distinguish between cognitive, affective and psychomotor learning domains and the respective objectives. In skills training, of course, the emphasis is on the psychomotor domain – the hand, but as we saw already, the other two domains are also important – the head and the heart.

All three domains involve in themselves different levels: in the psychomotor area (hand) operations to be performed become more and more automatic; in the affective area (heart) attitudes become more and more internalized; in the cognitive area (head) the material becomes more and more complex.

On the following pages, you find detailed information for each domain with the different levels of learning involved, a general description with what the objectives of each level are concerned, and suggestions for action verbs to be used. This may particularly helpful for those who will have to develop a training plan, e.g. human resource department. To illustrate the meaning, the learning process of becoming a cashier is added for each domain as an example.

The psychomotor domain (hand):
Here the objectives can be ordered according to the degree to which operations have become automatic.

Level	General Instructional Objectives	Action Verbs
Perception	Recognizing a given set of actions. Watching a series of motions.	attend to, listen, look at, notice, observe, view, watch
Set-up	Positioning self for action. Recognizing given procedures as preliminary to action.	adjust, arrange, order, position, prepare, select
Guided response	Imitating and repeating performance of skilled instructor. Assuming roles or situations. Acting out pre-planned actions. Demonstrating procedures and methods.	act, demonstrate, display, exhibit, illustrate, perform, role-play, show, repeat demonstrated skill (drill, fry, paint, sew, type etc.)
Internalized response	Performing skill/task up to or exceeding established standards.	Perfecting demonstrated skill (drill, fry, paint, sew, type etc.)
Complex response	Applying internalized skill to new situations and under any given circumstances. Combining internalized skills to perform complex operations.	Integrate skill into complex actions and problem solving

Hierarchy of psychomotor learning objectives:

1.	The trainee observes the handling of a cash register.
2.	The trainee prepares the cash register for work: checking power, paper roll, change, laser reader.
3.	The trainee processes cash purchases.
4.	The trainee handles credit card purchases.
5.	The trainee can carry out all transactions involved, e.g. redeeming a voucher, correcting prices, issuing written receipts.

The affective domain (heart):
Here one can produce a hierarchy of objectives according to the degree to which values and attitudes have been brought into the student‘s consciousness and to what degree they have been internalized and become automatic.

Level	General Instructional Objectives	Action Verbs
Receiving	Listening attentively. Showing awareness of the importance of learning. Paying close attention to the classroom activities.	ask, follow, listen, reply, watch
Responding	Performing according to received input (lecture, demonstration etc.)	answer, comply, conform, execute, follow observe, perform, practice, present, show
Valuing	Developing and demonstrating a preference according to outlined values and standards.	complete, describe, differentiate, explain, form, initiate, invite, join, justify, propose, select, share
Transferring	Appreciating values and high standards in other areas.	adhere, alter, arrange, combine, compare, defend, generalize, identify, integrate, modify, relate, synthesize
Creating	Displaying general awareness with regard to values and standards. Creating standards in which proper conditions prevail.	act, discriminate, display, influence, practice, propose, qualify, question, revise, solve, use, verify

Hierarchy of affective learning objectives:

1.	The trainee listens to a lecture about payment and safety precautions involved.
2.	The trainee examines bills for authenticity.
3.	The trainee double-checks all transactions, e.g. received payment, change, credit card signatures, daily account.
4.	The trainee handles all financial transactions with care.
5.	The trainee prefers situations where safety standards are met.

The cognitive domain (head):
In the cognitive domain the hierarchy of objectives follows the principle of increasing complexity. It is assumed that higher objective levels cannot be reached until those beneath them have been dealt with.

Level	General Instructional Objectives	Action Verbs
Knowledge	Knowledge of common terms, specific facts, methods and procedures, basic concepts, principles.	arrange, define, duplicate, label, list, memorize, name, order, recall, recognize, relate, repeat, reproduce
Comprehension	Understanding of facts and principles, verbal material, charts and graphs etc. Translate verbal material into mathematical formulas.	classify, describe, discuss, explain, express, identify, indicate, locate, recognize, restate, review, select, tell, translate
Application	Applying concepts and principles in practical situations and in different context. Demonstrating correct usage of a method or procedure.	apply, choose, demonstrate, dramatize, employ, illustrate, interpret, operate, perform, practice, schedule, sketch, solve, use
Analysis	Recognizing assumptions and logical fallacies in reasoning. Distinguishing between facts and inferences. Evaluating the relevance of data. Analyzing structures.	analyze, appraise, calculate, categorize, compare, contrast, criticize, diagram, examine, experiment, discriminate, distinguish, inventory, question, test
Synthesis	Writing a well-organized theme. Giving a well-organized speech. Proposing a plan for an experiment. Integrating learning from different areas into a plan for solving a problem.	arrange, assemble, collect, compose, construct, create, design, formulate, manage, organize, plan, prepare, propose, set up, write
Evaluation	Judging the logical consistency of written material, the adequacy with which conclusions are supported by data, the value of a work by use of external standards of excellence.	appraise, argue, assess, attack, choose, compare, defend, estimate, judge, predict, rate, score, select, support, value

Hierarchy of cognitive learning objectives:

1.	The trainee can name the different forms of payment: cash, credit card, down payment.
2.	The trainee can explain the single steps involved in cash payment.
3.	The trainee can perform the mathematical operations involved in cash payment.
4.	The trainee can compare the advantages and disadvantages of each form of payment.
5.	The trainee can plan how to settle the daily account of the cash registry.
6.	The trainee can assess possible causes for mistakes in daily account.

Likewise, this can be done for all other professions or crafts. Depending on the complexity of the skills and knowledge involved, one set of learning objectives with the three different domains will not be enough, of course. It is the function of the training plan to cover all the important learning areas.

6. The training plan

The training plan is an instrument to help us to train people. It contains information about the topics to be covered and the time frame of a particular training activity. It can vary from a rough outline to a detailed plan.

To ensure that the right people do the right job, it is important to specify what a person is required to know and/or must be able to do for a particular work placement. Training plans break down the major qualifications – e.g. being a welder, tool and die maker, plumber – into learning modules and single learning steps, along with the respective learning objectives and the time it supposedly takes to achieve them. They incorporate different subjects and topics to be tackled, such as technical drawing, trade mathematics etc.

To formulate a training plan means to:

- Identify the needs with regard to skilled workforce
- Translate the needs into competencies
- Break down competencies into learning modules and single learning steps
- Formulate objectives
- Allocate a time-frame
- Specify entry requirements for potential trainees, e.g. educational background, working experience

Within the business sector, a lot of companies are not conducting training courses as such or follow a particular training plan. Nonetheless, there is a growing awareness that a company will benefit in many ways once a systematic approach to training is established. However, a training plan is only as good as the people who implement it. In that context, once again it must be stressed that the ability to communicate with others is one of the crucial requirements for a trainer.

7. The importance of communication

Very often, we just assume that the other person knows what to do and how to do it and why to do it. The reason why problems arise has partly to do with this assumption. When investigating the real cause of a problem at work, many times we will find that people have not been instructed sufficiently, if at all: how to do things in the correct manner and why this is important. Basically, it is a lack of communication.

To avoid that the same mistakes happen again and again, a company can begin to document and systematize what an employee for a particular position should know and what general company rules and policies are to be followed. This way, important information is not being forgotten or left out. Instructions are laid down and can be referred to in case problems arise. Also, each workstation in a production line can be equipped with a chart that lists the sequence of steps and procedures to be observed at this particular placement. This helps to rule out mistakes, thus increasing quality and safety.

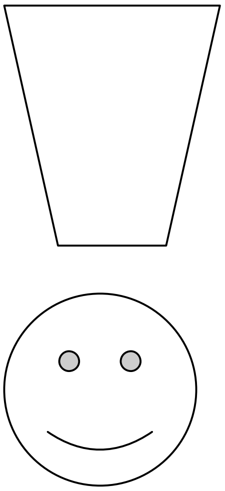

As was said, however, it is not enough to put all these matters just in writing. Once again, it is the human factor that makes the big difference. It is usually up to the supervisor or trainer to communicate what is important to the respective people: to explain the rules, to point out and demonstrate the procedures, to correct, to evaluate etc., thus facilitating learning. To do this successfully, it is useful to plan or reflect in advance on how to proceed with a particular skills training or instruction. This way, you ensure that you don't forget important things, that you are clear about the objectives and sequence of instruction and that you have an idea of how long it may take. And together with your objectives, you already have established the criteria for evaluation.

8. Evaluation and quality control

As we said, learning means change of behavior due to experiences. Learning objectives, therefore, state what kind of behavior we expect at the end of a learning process: what a trainee has to do/know, with what help he/she is going to do it (e.g. with a particular tool), and how he/she is going to do it (with what precision, in what time). Thus, we have already established criteria, which allow us to evaluate the performance of a trainee.

In skills training, evaluation is vital for long-term success. Evaluating means to ensure that things are done in the right way, thus guaranteeing quality work and production and good service in the long run.

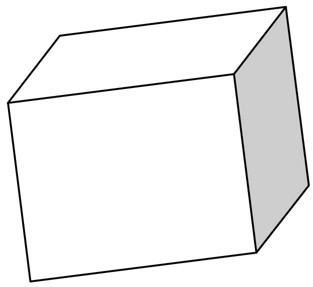

Evaluation is a constant, on-going process. It means not only assessing the results at the end of a learning process, it also means to correct mistakes in between. That may incorporate repeating demonstrations, explaining a matter again, perhaps in a different way, or pointing out reasons why a work piece does not meet the required standards and how it can be improved. It also means to give an opportunity to ask questions and enough time to exercise and strengthen a particular skill.

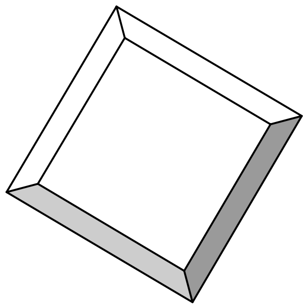

Once more, we can see that communication skills play a vital role: as a trainer, you must be able to criticize the trainees in a way that they are not discouraged, yet understand what you mean. It is of no use “to beat around the bush” - that is to pretend that something is well done when it is, in fact, not. Also, the “This-will-do” attitude is of no help. To approve of a piece of work that does not meet established standards simply because it still somehow functions or satisfies the need, is un-professional! Thus, you will only encourage wrong work attitudes and also damage your own reputation as a good, quality-conscious trainer.

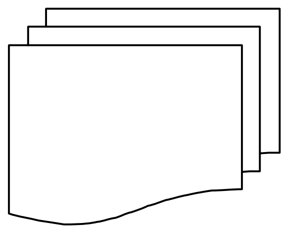

It is quite obvious that a company will benefit from the craftsmanship of their workforce. With globalization and increasing competition, quality will be one of the key factors that determine the success or failure of a business in the long run.

For the individual, the benefit is also obvious: the better skilled and trained a person is, the higher are the chances for employment or successful self-employment. In training people, you as a trainer not only contribute to other people’s life in form of passing on skills and knowledge. You can also nurture and help develop the pride that people have: the pride in their craft and trade and in a job well done.

Unit 3 The Training Methods

1. The three steps of learning

Since learning means change of behavior due to experiences, the first step in learning means that we have to experience something new: new knowledge, new skills, or new attitudes. However, having experienced something does not mean that we have learned it already. Apart from experiencing something new, we also have to understand the meaning of it - we have to appreciate it, the second step in learning. If not, it will be very hard to really learn it – that is, to remember it, the third step in the learning process. Without instilling the new knowledge, skills or attitudes in our minds, the learning process is not complete.

Therefore, we can say that we have not learned something until we have…

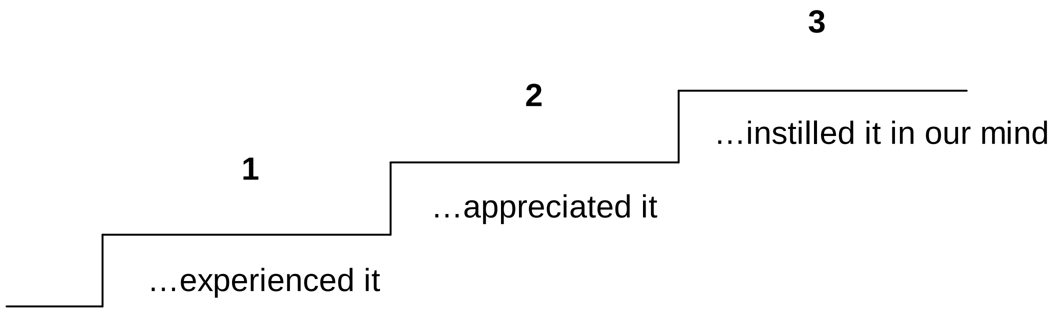

But how do we really learn? Let us take a closer look at different ways of learning of human beings that are also relevant for successful training.

2. Different ways of learning

To understand the different types of learning, let us look at some examples:

Trial & error

A supervisor holds a stopwatch in his/her hand, and fumbles with the crown and the pushbuttons in order to find out how it can be started, and what function the various knobs have. He/she notes what happens when operating the crown and the pushbuttons on the side. He/she becomes familiar with the functions of the watch, and can operate it to conduct the desired function. He/she has learned by trial and error.

Observation & imitation

It is shown to the supervisor how he/she can start and stop the stopwatch by pressing the various knobs. He/she watches closely and copies until he/she succeeds in operating it. He/she has learned by observation and imitation.

Insight

The supervisor reads in the operating instructions that the stopwatch must be wound up carefully so that the spring does not break, and that the crown must be pressed vertically so that the axle is not deformed. He/she appreciates this and follows the advice. He/she has learned by insight.

Repeated perception

Whoever needs to look up the same telephone number frequently in a telephone directory will gradually note this number. He/she has learned by means of repeated perception.

Adaptation

As a heavy smoker a student in a class would like to light a cigarette. He/she looks around, and sees that no one is smoking, even those of his/her colleagues who are known smokers. He/she adapts, and from now on refrains from smoking, mostly also when it does not suit his/her environment. He/she has learned by adaptation.

Repetition

Somebody reads the definition of learning. He/she repeats it several times until he/she knows it by heart. He/she has learned by repetition, or by instilling it in his/her mind.

So human beings learn and thus change their behavior in various ways. Of course, learning can also be very complex and thus involve different approaches that are combined. Also, people have a preference for a particular way of learning: some learn easier by insight, others have to find out on their own, thus learning by trial and error.

By the way, people, children in particular, learn most of their social behavior by observation and imitation. In the context of training this means to display exactly the behavior we expect of our trainees, else our training is unlike to be successful. For example, if we want our trainees to cherish punctuality, we as role models have to be on time ourselves: Practice as you preach!

People also adapt to their surroundings. Just think of a very tidy environment, everything clean, no garbage around; it is quite hard to carelessly throw away something there. But once the environment is already littered, it doesn't take much to add another plastic bag full of garbage or throw away an empty bottle. For successful skills training this means to provide an environment where the desired conditions prevail: It is not enough to put up a poster about "Five S", the Five-S-approach has to be put into practice to be taken seriously!

3. *The meaning of training method*

When it comes to training, there are a variety of different methods that each make use of the various ways human beings learn. Before we have a closer look at those methods, let us first define what a method is.

According to the dictionary a method means:

Method	=	a way or manner of doing something
	=	the use of an orderly system as opposed to luck

Correspondingly, a training method means:

Training method	=	a consciously followed way
	=	to achieve specific training objectives

Furthermore, a training method is identified by:

- The social form (individual, pair, or group instruction)
- A sequence of goal-oriented steps
- A pedagogical concept

If, for example, the pedagogical concept of independent planning, executing and controlling is favored, these steps will also be highly dominant in the respective training method as is the case with the project method. The training itself then takes a typical course; patterns and individual steps can be identified clearly.

Based on these characteristic features and the definition, it is obvious that the widespread "observe – copy" approach in itself cannot be regarded as a training method. Though the trainee may learn something, the major shortcomings are:

- The training and learning is unplanned and unsystematic.
- It is a so-called "stealing with the eyes" instead of training/learning.
- It is copying without any planned and explicit demonstration.
- Beginners cannot cope because it is usually too much for them.

4. The four categories of training methods

Training methods can be grouped into four main categories. Each category puts the emphasis on a different aspect within the learning process, such as presenting, discussing, acquiring, or processing the material to be learned. Within each category, trainer and trainees are differently involved in the training process with regard to giving or receiving activities. Each category also has its particular features with certain advantages and disadvantages.

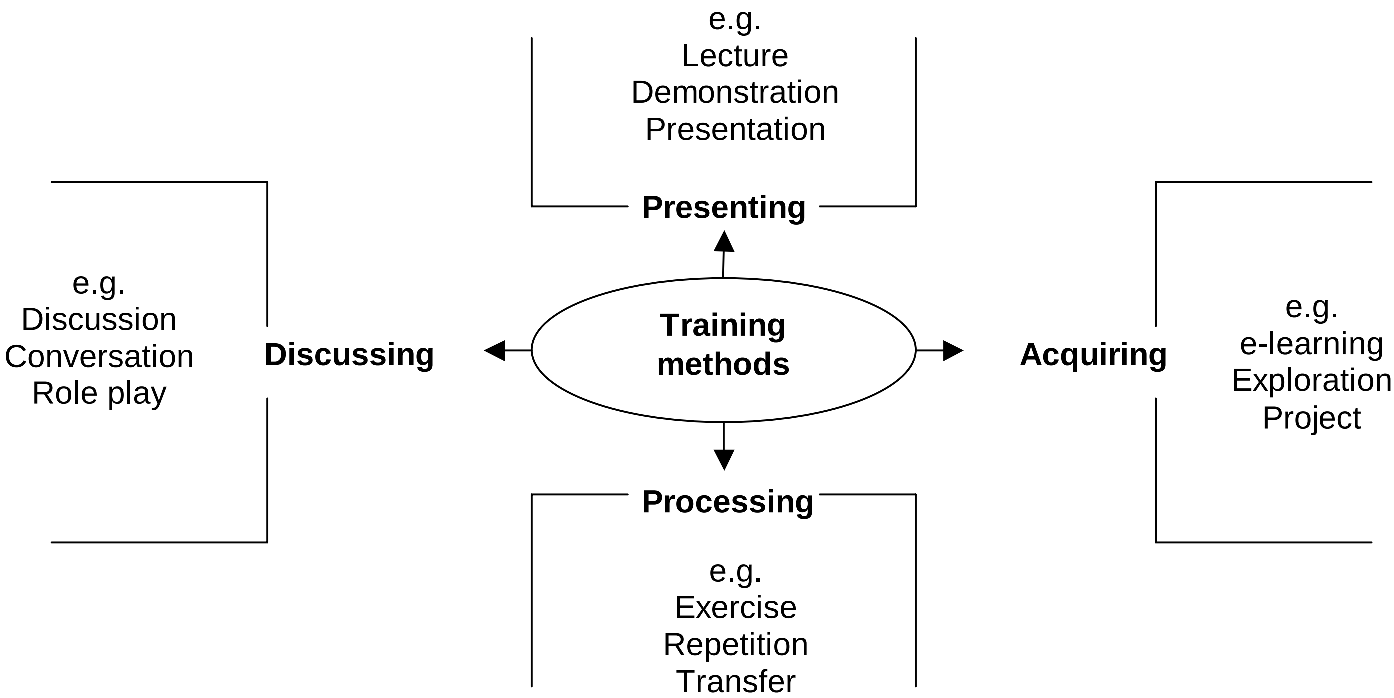

Training methods
based on **presenting**

Trainer:	**Trainee:**
Lectures Demonstrates Presents Performs Guides process of perception and thinking	Listens Watches Re-enacts in the mind Imitates Observes Gains understanding, perception, orientation

Lectures and presentations are used to present abstract topics and training matters, to explain complicated connections, problems, complex structures and non-visible features. To enhance learning, the trainer can make use of visuals such as films, slides, mock-ups, and originals. The trainer is active and giving, the trainees are passive and receiving.

Demonstrations are used to facilitate practical skills learning. Original tools and working materials are preferred. The trainer is active and giving, the trainee is receiving and active only insofar as he/she follows the outlined steps and patterns when imitating the observed behavior. The emphasis is on the trainee re-enacting what has been demonstrated and not on finding own solutions. The broader context of the respective skill is usually neglected.

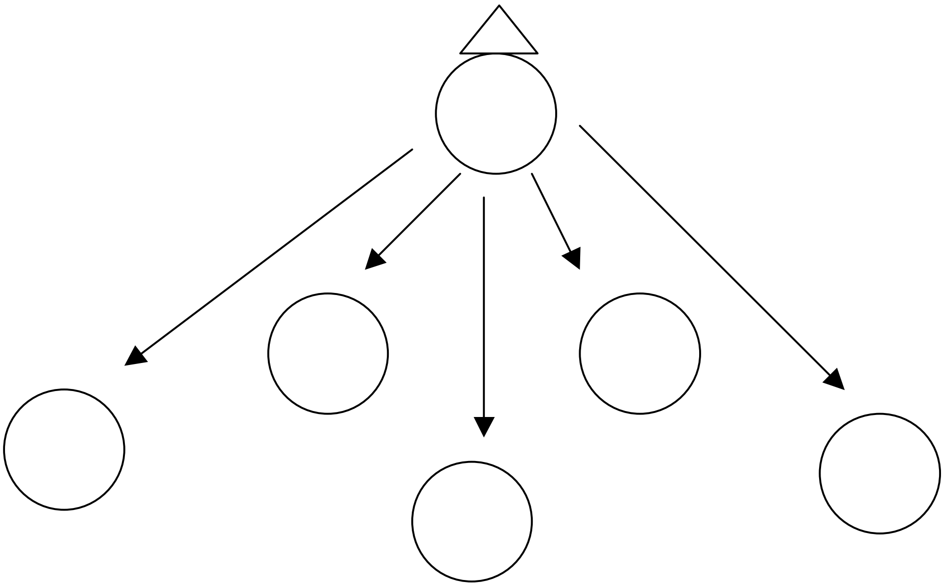

Training methods
based on **discussing**

Trainer:	**Trainee:**
Establishes objectives Explains topic Introduces Asks Gives inspiration Answers Corrects Confirms Summarizes	Answers Asks Contributes experiences Argues Discusses Debates

Methods favoring dialogue, such as discussion, conversation, debate, circle talk, role-play etc. are useful to enhance understanding and analyzing. The trainer guides the trainees by using the questioning technique; he/she gives ideas, makes suggestions etc. The trainees are actively involved in the learning process. They learn how to communicate and express themselves.

Topics can range from factual training matters over problem solving to exchange of experiences and opinions, the latter helping to develop tolerance and understanding. Also, matters concerning the training itself can be tackled. Depending on the choice of method, the trainer is more or less dominant; sometimes, he/she is just the moderator of an exchange.

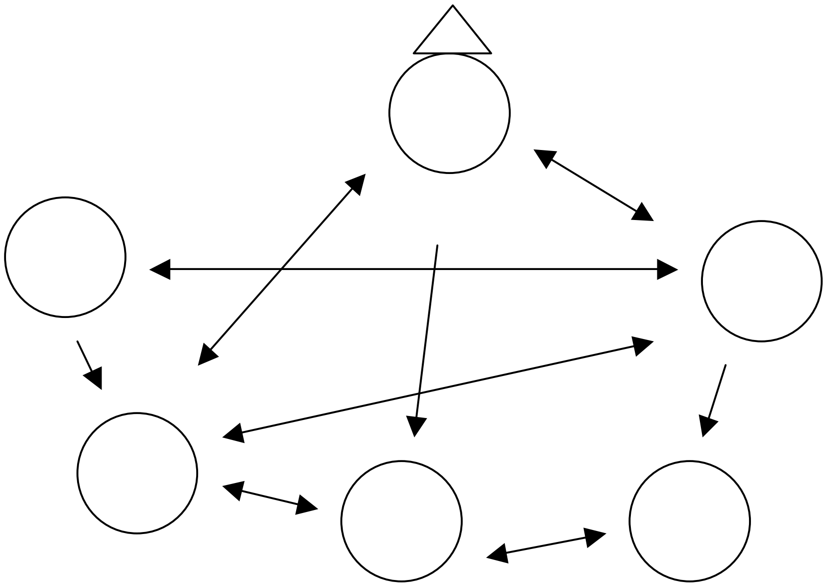

Training methods
based on **acquiring**

Trainer:	**Trainee:**
Introduces problem or task Arranges working method Assesses work attitude Assesses result Assists if necessary	Clarifies objectives Organizes the work Searches for solutions Procures information Solves problems Works out functional solutions Controls results Presents results

Project method, e-learning, exploration, guide text method, planning game, case study etc. are all based on the assumption that you learn most by exploring the subject matter and overcoming difficulties on your own. These methods try to develop independent learning, enhance planning, organizing and executing competence along with social competence since group work is mostly favored.

The trainees are actively involved in the learning process. They approach the trainer for help or advice when needed. The trainer is a counselor and organizer who remains at the background and only interferes when necessary.

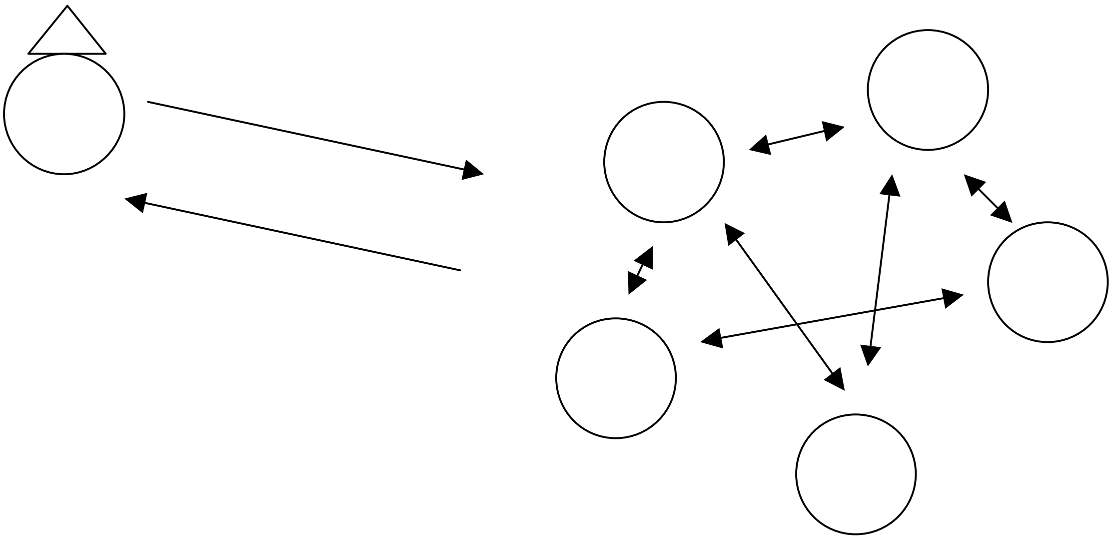

Training methods
based on **processing**

Trainer:	**Trainees:**
Organizes processing Motivates Imparts exercising and repetition techniques Offers transfer	Memorize learning matter Develop performance speed Develop performance security Transfer learned matter to other topics and areas

Methods based on processing are focused on the third step of learning, the instilling in the mind. They aim to strengthen the new skill or knowledge through exercises, repetition and transfer to new areas, that is changing the working conditions and making use of the fact that application is the best revision of learned material.

The trainer organizes this process by motivating and giving exercises and tasks to do. He/she controls the progress of the trainees, corrects when necessary, evaluates and also acknowledges progress.

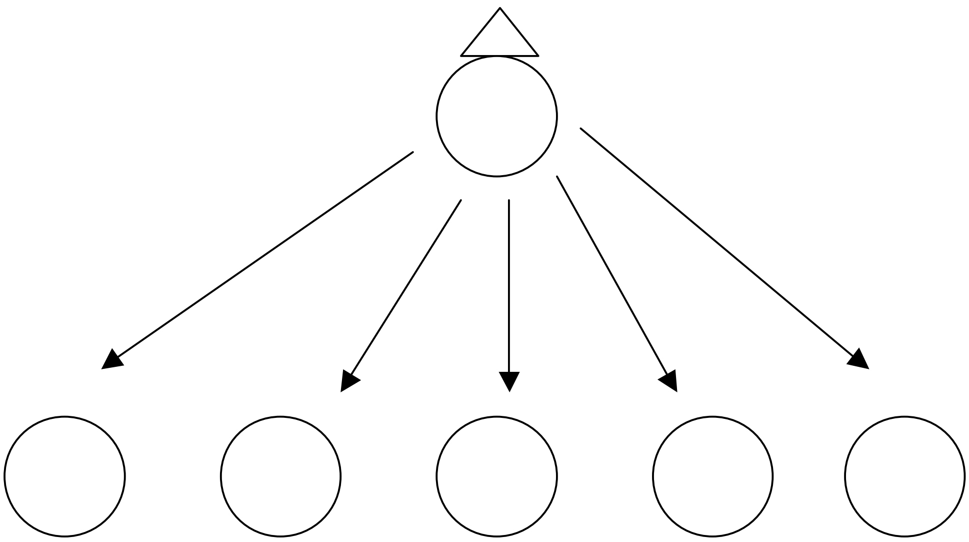

5. The Four-step-method

The Four-step-method is a simple but very successful method for skills training on a one-to-one level. It combines features of two categories: presenting and processing. The four steps refer to the way human beings learn: that they have to experience something new, to appreciate it and, last, not least, instill it in their minds to make the learning process complete.

For you as a trainer this method requires very good communication skills since each step of what you are doing has to be explained in detail. As a skilled person you may take a lot of things for granted. But as we already pointed out, assuming that the other person knows already can lead to serious misunderstandings and cause a lot of trouble. Also, it is not sufficient to simply demonstrate without explicitly telling the trainee what and how and why you are doing something. Without proper explanation, crucial procedures may not be noticed, thus leading to wrong ways of doing something.

The success of the four-step-method lies mainly in the ability of the trainer to explain exactly what he/she is doing. Another crucial feature is the follow-up: the trainee is given enough time and opportunity to strengthen the skill. During these exercises the trainer will observe the trainee and correct him/her when necessary, and acknowledge progress, of course. All in all, this approach can be considered quite effective, even though it is time consuming. But remember: quality training always requires plenty of time!

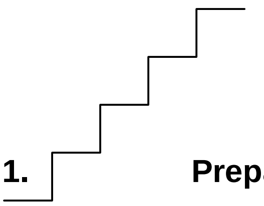

1. **Preparation of trainee**

- take the shyness
- motivate
- show the objectives and tasks
- evaluate the knowledge
- familiarize with the work place
- give advice concerning safety

Deutscher Entwicklungsdienst

2. Demonstration and explanation

- place the trainee that he/she is standing in the same direction to the work piece as you do
- 1. demonstration: demonstrate the whole procedure in original time
- in case of complicated procedures divide them into modules and teach them step by step
- 2. demonstration: repeat the demonstration and make the single steps visible; demonstrate difficult steps repeatedly
- say what you are doing, how and why you are doing it in that way (what? how? why?); go into detail
- give the opportunity to ask questions
- 3. demonstration: summarize and demonstrate uninterrupted

3. Trainee activity

- encourage the trainee to try it on his/her own
- don't interrupt the trainee in his/her first attempts
- make comments only on serious mistakes
- precision is more important than speed
- let the trainee say what he/she is doing, how and why

4. Exercising and strengthening

- give enough time to exercise
- acknowledge progress
- control that no mistakes are done during exercising
- change conditions of exercising
- slow adaptation of real working condition

6. Example of sequence-of-actions analysis

Let us now look at an example of a sequence of actions within the context of a Four-step-method training: the skill to be taught is cutting a profile. First, the task has to be analyzed and broken down into the major steps, such as preparing – sawing – going over. Each of these three major steps once again is analyzed and broken down into the main activities involved: Preparing then really means marking and clamping, sawing means starting, sawing and sawing through, while going over involves unclamping and controllingg. The chart below shows this sequence of activities.

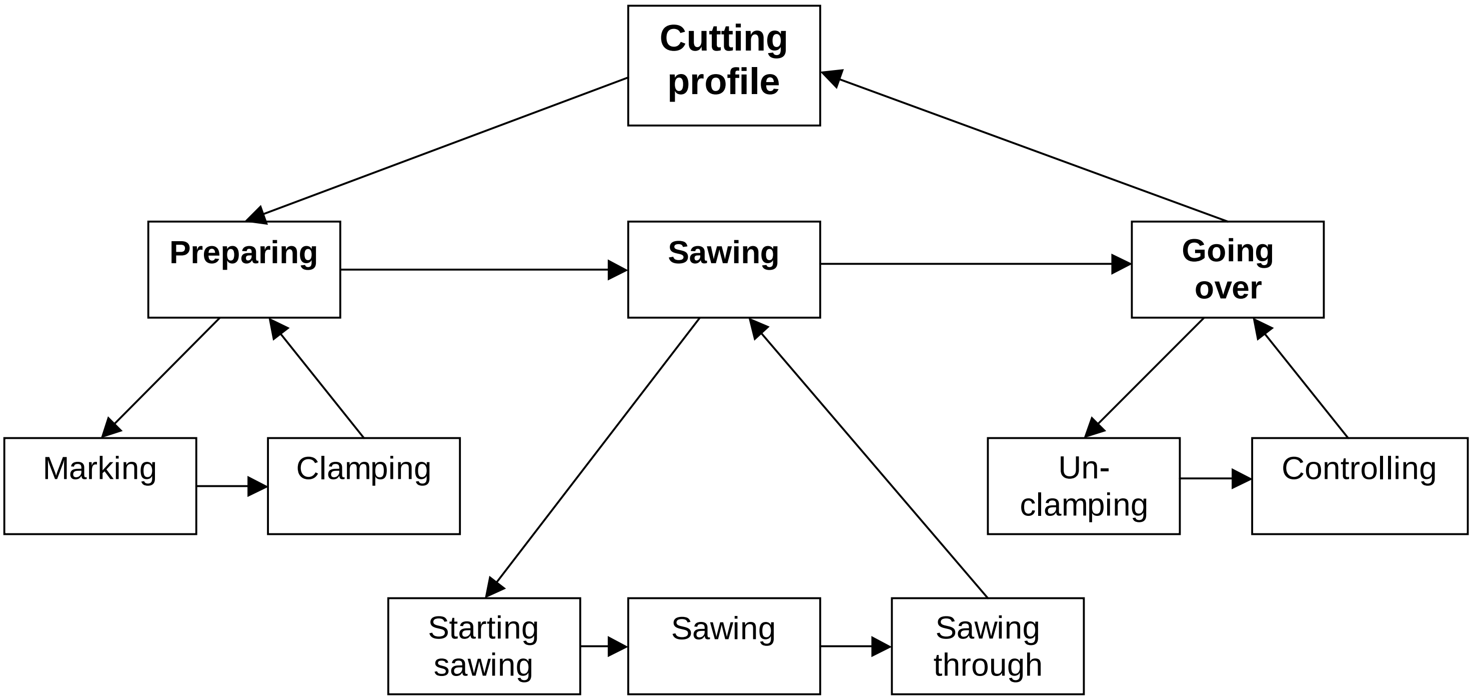

When analyzing each activity, however, we will find that it is not yet enough to describe preparing as marking and clamping. In order to be able to execute these activities, once again they have to be broken down into the various actions involved. Thus it is ensured that all important actions are included and made visible to the trainee. It also helps to prevent assuming the trainee may already know or that he/she may just recognize each action by simply observing the demonstration of the skill.

The following three charts illustrate the sequence of actions for the three major steps involved in cutting a profile: preparing, sawing and going over.

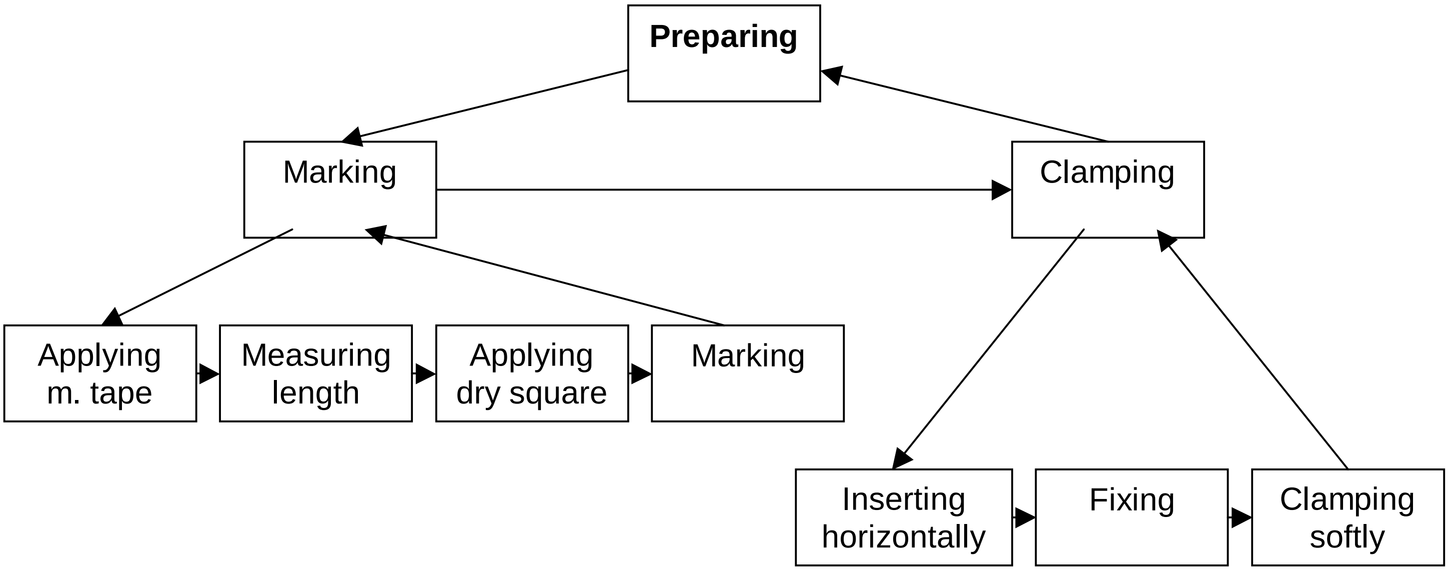

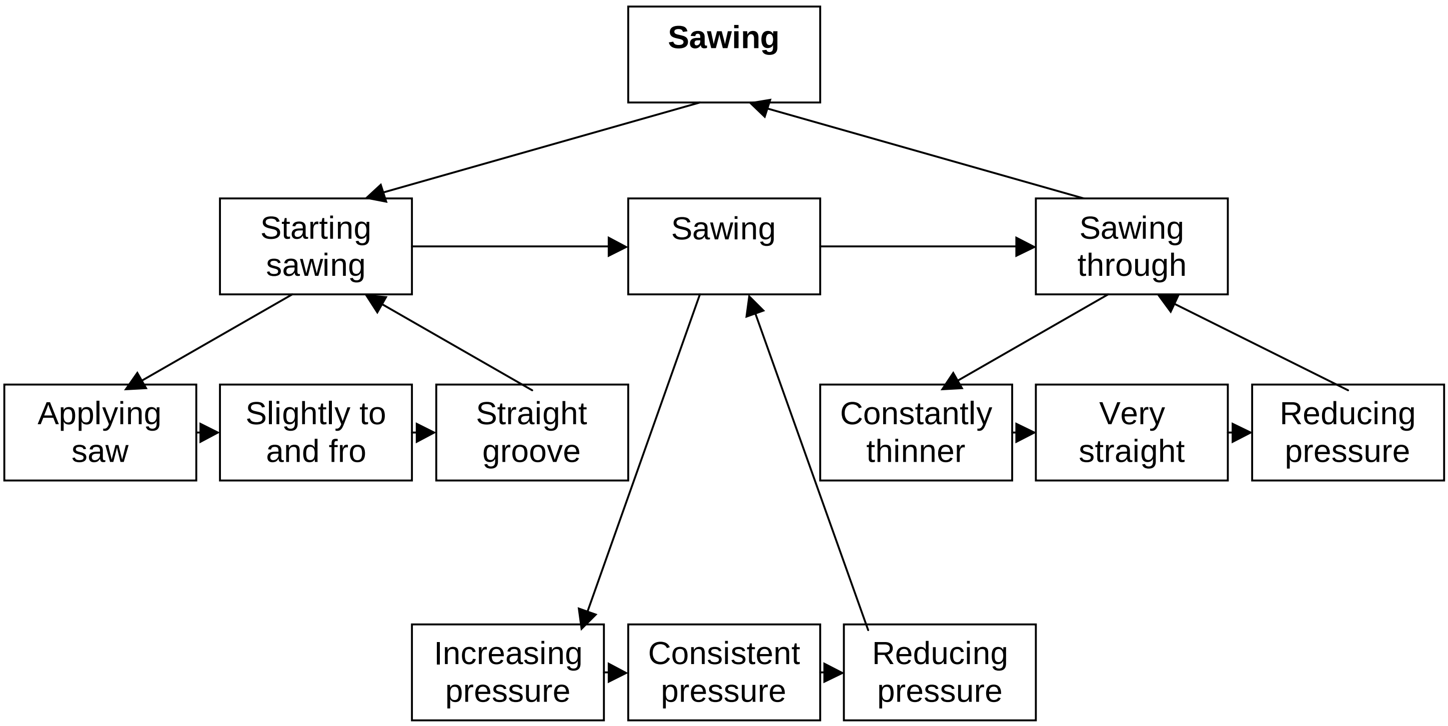

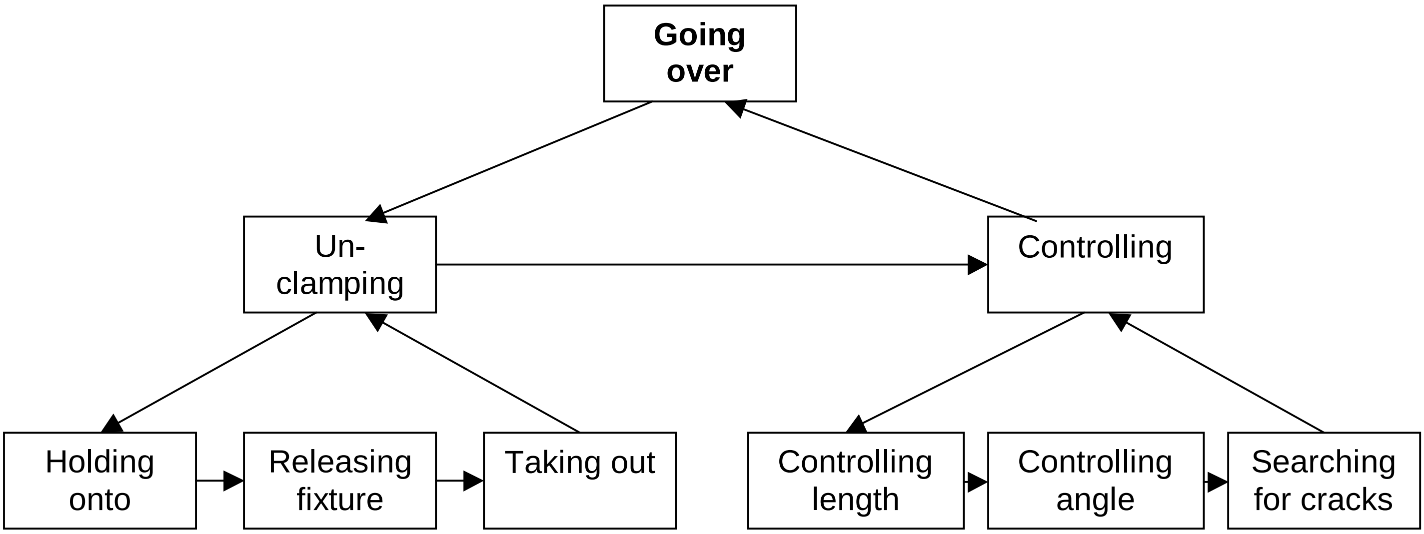

When demonstrating the skill, the trainer explains what he/she is doing (learning segment), how he/she is doing it (learning tip), and why he/she is doing it in that particular way (explanation). The chart below takes up the 22 single actions involved in cutting a profile and lists the learning tip and explanation for each.

No.	What? Learning segment	How? Learning tip	Why? Explanation
1	Applying measuring tape	Putting profile on level surface, hooking tip of measuring tape to pre-cut side and applying tape to upper edge of profile	To ensure correct measurement
2	Measuring length	Marking correct measurement with tip of pencil	To allow for precise marking with dry-square
3	Applying dry-square	Long side is applied alongside marked spot, short side is applied to edge of profile	To guarantuee sawing at right angle
4	Marking	Pulling fine pencil tightly along dry square on top side of profile; apply same procedure for marking both sides of profile using drawn line on top side as point of reference	To minimize deviation from correct measurement

5	Inserting profile horizontally	Edge of profile is level with edge of bench vise; marked line is 1 to 2 cm away from vise	Condition for straight and safe sawing
6	Fixing profile	Tightening vise slightly until profile holds	Final corrections are still possible
7	Clamping vise	With appropriate force, so safe sawing is possible	If clamped too tightly, wood can be damaged
8	Applying saw	Saw blade is lying exactly on drawn line in vertical position to profile using thump as guide with safe position of hands ensured	Starting point determines the whole result
9	Sawing slightly to and fro	Exerting as little pressure as possible on workpiece	Danger of tilting teeth and material breaking off
10	Sawing straight groove	Keeping saw perpendicular	To get proper vertical cut
11	Continuing sawing with increasing pressure	Increasing sawing pressure appropriately	Sawing pressure depends on sawing speed; ensuring quality
12	Sawing consistently through material	Finding optimum for frequence and stroke using whole length of saw blade	To achieve best quality cut
13	Reducing pressure	Reducing sawing pressure appropriately	Sawing pressure depends on sawing speed; ensuring quality
14	Getting constantly thinner	Preparing for sawing through with low pressure while keeping up frequenzy	Too much pressure and too little frequenzy can cause material to break off
15	Sawing very straight	Saw blade has to run parallel to remaining workpiece	Like during start: danger of tilting teeth and material breaking off
16	Reducing pressure	Sawing through with minimal pressure	To reduce parts breaking off, to avoid cracks
17	Holding on to workpiece	Taking clamped part into hand	Falling down of workpiece could cause damage
18	Releasing fixture	Turning vise in correct direction exerting slight pressure	If turned in wrong direction,workpiece will be damaged
19	Taking out profile	Putting workpiece on level surface	Here, final length measurements can best be taken

20	Controlling length	Measuring tape is exactly applied to upper edge of profile	A slanting position would cause inaccuracy of measurement
21	Controlling angle	Putting dry-square on cut end	Divergencies of angle can be made out against light
22	Searching for cracks	Examining area of sawing for cracks	Probability of cracks in that area is highest

7. Final conclusions

As we said earlier, a training method is a consciously followed way to achieve specific training objectives. Depending on these particular objectives and the nature of the material to be taught, you will decide which of the training methods out of the four categories you will choose. Your choice of method will also depend on your trainees – whether they can handle this particular method or not. Also you as the trainer must be able to handle the method you use. For example, it is not advisable to do role play when you are neither confident with the method nor convinced that your trainees will benefit from this exercise!

We also said that a training method is identified by its social form: training can take place on an individual (1 : 1) level, but there can also be pair or group instruction. Once again, this will depend on the objectives and the nature of the training matter.

Group instruction, of course, is favored out of organizational and financial reasons. But there are also other benefits: trainees can compare each other's performance, they can find help and assistance in other trainees, the likeliness of discussions and thus clarifications of problems is higher, and there is also a greater challenge while learning in a group as compared to learning on one's own. Particularly young trainees will favor group instruction since they rely so much on their peers and are usually more comfortable when being with people of their own age. Also the adult trainee will be happy to exchange views with people in similar positions whose advice on matters concerning the training can be asked.

In skills training, however, it is important to ensure that each trainee has an equal chance of learning. This may mean to present background information/theoretical knowledge to the whole group, while the actual demonstration of the particular skill is done on an individual or pair level. When demonstrating a new skill to a whole group, you have to ensure that the trainees' follow-up activities are supervised on an individual level. You also have to ensure that each trainee gets his/her turn and nobody is being left out. Once again, it has to be said that quality training is time consuming.

Whatever method you choose, however, they all have in common that you must have good communication skills: The success of your training efforts will largely depend on your ability to communicate!

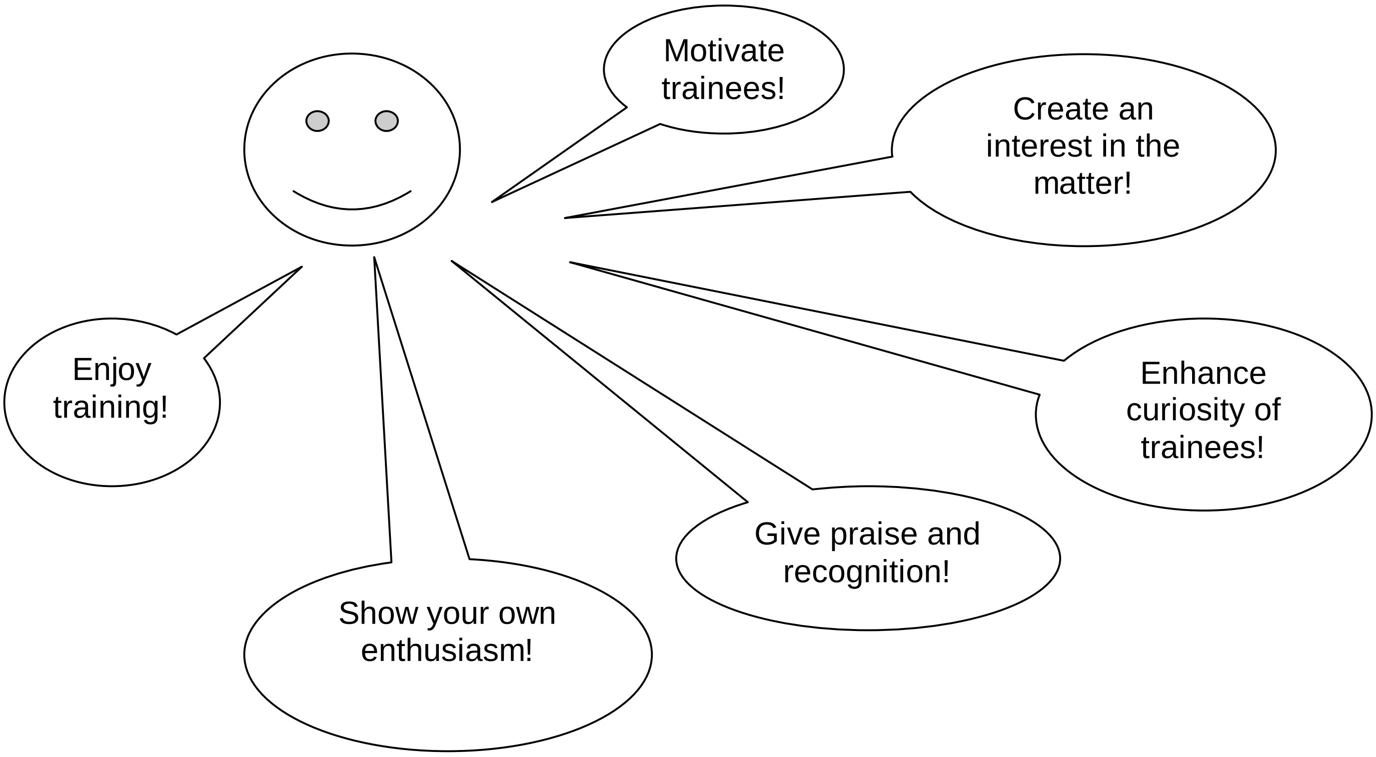

Exercise 1

Explain the use, handling, safety and maintenance of a particular tool.

General remarks	Example: wooden hand saw
Use: State the major purpose. Name the features. Point out variety. Give reason for particular features.	**Use:** A hand-driven tool for cutting wood. Consists of handle and thin flat steel blade with row of V-shaped teeth on the edge. Direction of teeth indicates direction of sawing. Size of saw depends on wood (humidity, hardness, thickness). Wooden saw must have flexible blade. Bigger teeth make a rougher cut, finer teeth make a smoother cut. Set teeth allow blade to cut through wood.
Handling: Explain handling in general. Explain reasons. Give special tips where possible.	**Handling:** Fix piece to be sawn firmly with cut 0,5 to 2 cm off bench vise – if too close, saw gets into bench vise; if too far, material bends or breaks off, no straight cut possible; if not fixed firmly, material bends, no straight cut possible. Position body properly to make use of its force (upright position, body at ease, feet apart, sawing below waist level for proper vision of marking). Start with short strokes. Continue with long strokes using whole blade. Finish with short strokes reducing pressure.

Safety: Point out safety measures. Highlight possible consequences if advice is not followed.	**Safety:** All cutting tools should generally be handled with care. If not, injuries, such as cutting fingers, are likely to happen. Fix piece to be sawn firmly, else piece might fall down or saw might slip. Ensure safe position of fingers. Be aware of piece cut off falling down and hitting your feet. Insure firm grip of saw to avoid saw slipping off work piece. Be aware of sharp teeth.
Maintenance: Explain maintenance measures. Discourage wrong use.	**Maintenance:** Sharpen teeth with triangle file when needed. Apply oil to blade to prevent corrosion. Use wooden saw only for wood, not for metal. Don't cut through nails or screws.
Demonstration: Show how tool is used by demonstrating.	**Demonstration:** (see pages 33 – 37 of handout)
Application: Allow for trainees' exercise.	**Application:** Let trainees practise after they have observed proper demonstration. Vary exercises according to trainee's ongoing performance. Emphasize that accuracy is more important than speed.

Exercise 2

Evaluate and control work piece of trainee and give feedback.

General remarks	**Example: cutting profile**
Task: State trainee's task. Point out particulars.	**Task:** Cut a profile to length of 76 cm. Ensure right angle of cut. Handle material carefully.
Assessment: Assess execution of skills involved. Control particulars.	**Assessment:** Control length. Control angle. Control cut side for cracks. Control profile for other damage.
Diagnosis: Point out achievements. Point out failures. Diagnose cause of failure, e.g.: Has not understood task. Cannot perform skill required. Is afraid to use tool/equipment/machine. Has used wrong tool. Has used wrong material. Displays wrong work attitude. Thinks speed is more important than accuracy.	**Diagnosis:** Possible failures: Too long, too short – not familiar with correct measuring procedure; not able to read metric tape measure; wrong work attitude regarding accuracy. No straight cut/right angle – not familiar with correct marking procedure; wrong sawing technique; lack of sawing exercise; wrong work attitude regarding quality. Cracks – wrong sawing procedure; lack of sawing exercise; wrong work attitude regarding quality. Wood damaged – clamped too tightly in bench vise; tigthening bench vise instead of releasing when taking work piece out; wrong work attitude regarding quality.

Cure: Offer opportunities for overcoming mistakes according to diagnosis, e.g.: Repetition of knowledge required. Repetition of skill involved. Offer of help in general. Special assignments.	**Cure:** Explain metric system. Incorporate practical measuring exercises in daily training. Demonstrate correct measuring procedure again. Let trainee repeat exercise. Demonstrate correct marking procedure again. Let trainee repeat exercise. Demonstrate correct sawing procedure again. Let trainee exercise. Vary exercises. Emphasize importance of accuracy instead of speed. Point out additional costs through careless work (rejects, minor quality, abuse of resources, extra time to correct mistakes). Offer assistance whenever needed.

Dealing with different trainee behavior:

Type of trainee	**Trainer behavior**
The **aggressive** trainee	Remain objective and calm. Do not enter into quarrel. Reject personal attacks. Lead back to subject. Ask other trainees to discuss matter. Keep focus on training issue.
The **bored** trainee	Awaken interest. Emphasize importance of subject. Encourage to participate. Transfer responsibility. Call for attention. Ask selective questions to evaluate knowledge.

The **entertaining** trainee	Call for attention. Interrupt private discussions. Prevent activities that are not related to training. Concentrate on subject. Point out importance of serious attitude. Increase involvement in serious activities.
The **nervous** trainee	Try to calm down trainee. Try to focus trainee's attention on work piece and your feedback. Interrupt trainee politely when talking too long. Ask trainee to be brief and precise in statements. Have main points summarized. Ask selective questions.
The **over-confident** trainee	Call for attention. Emphasize importance of accuracy. Evoke ambition in trainee for good craft. Point out details. Give specific assignment to improve skill. Give responsibility.
The **quiet** trainee	Recognize progress. Ask questions to find out where trainee needs more instruction. Encourage trainee to ask questions himself/herself. Show that you take trainee seriously. Ensure trainee is being recognized despite his/her quiet nature.
The **quick** trainee	Acknowledge interest and result of first attempt. Stress that precision is more important than speed. Give reasons for accuracy. Point out that speed will come with time. Assign exercises. Vary conditions of exercises.

The **shy** trainee	Encourage to cooperate. Encourage to talk. Reinforce self-confidence. Address directly. Praise progress. Entrust with specific task.
The **slow** trainee	Encourage. Support. Talk slowly. Emphasize important points. Let trainee repeat important points to ensure he/she understood.
The **timid** trainee	Encourage. Reassure. Find out cause of fear. Help to overcome fear. Create opportunity for achievement. Acknowledge progress. Assign specific task.

Through learning we acquire new…

Knowledge

Learning = Change of behavior due to experiences

Skills

Attitudes

New patterns of behavior

The 4 steps in learning

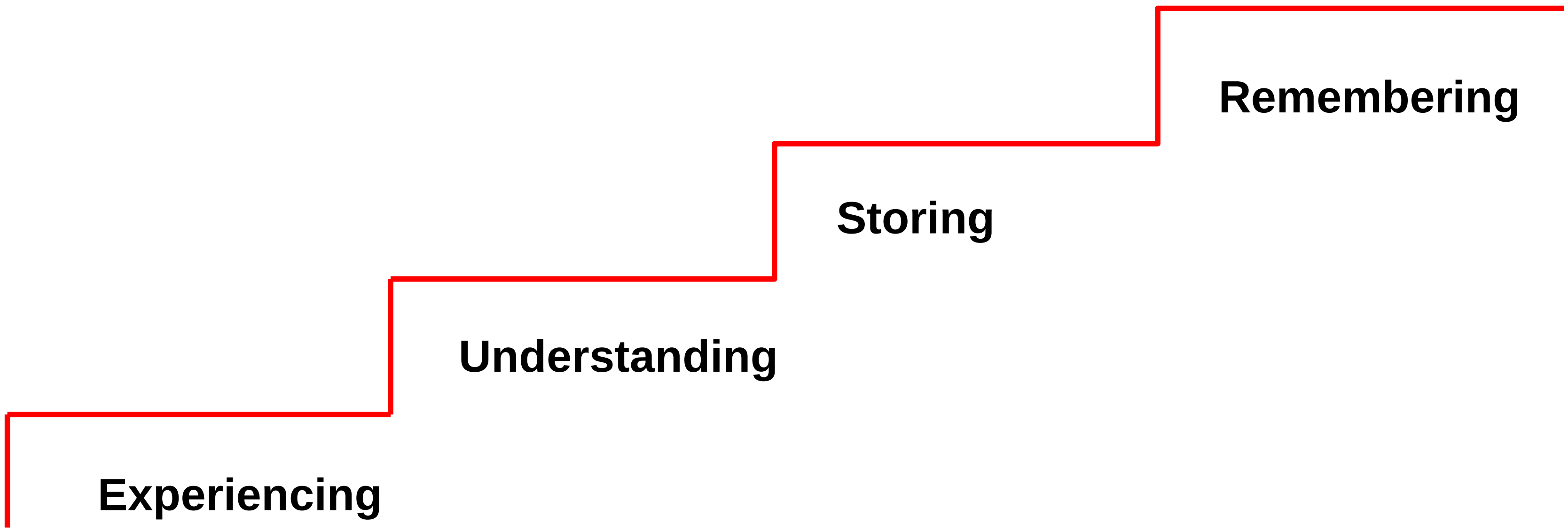

Neuron

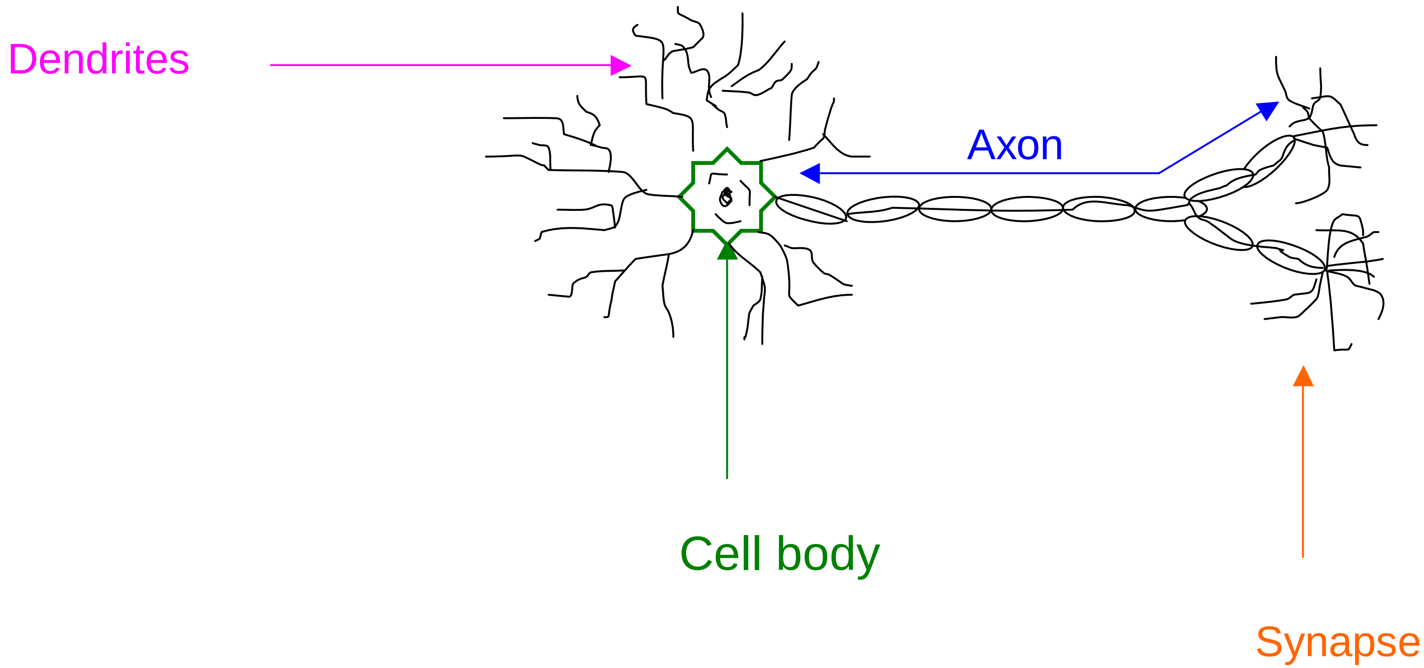

Brain development

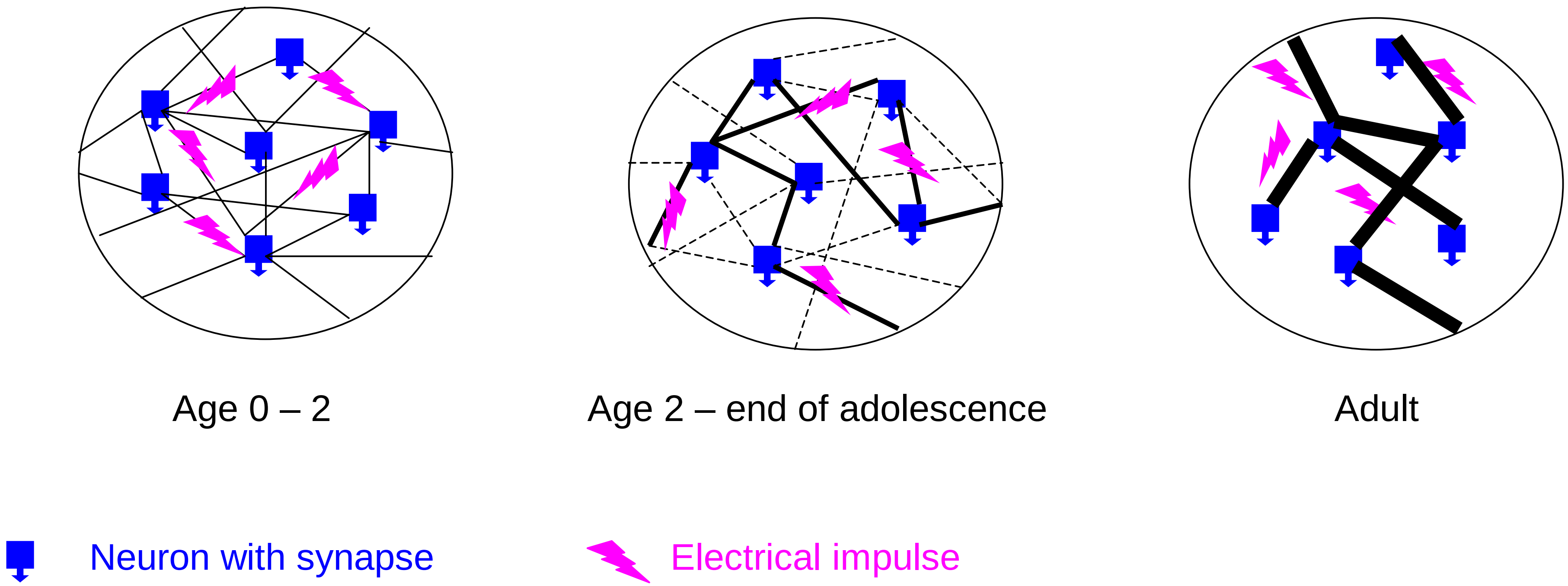

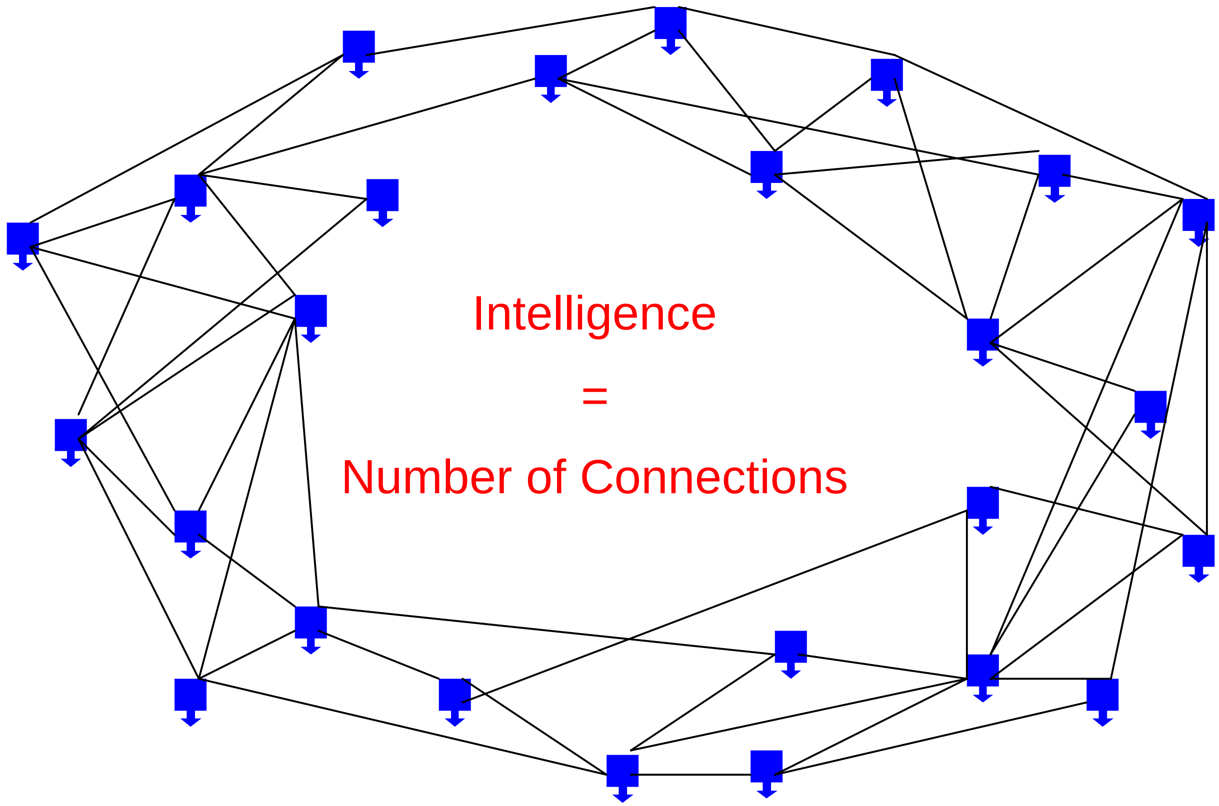
Intelligence
=
Number of Connections

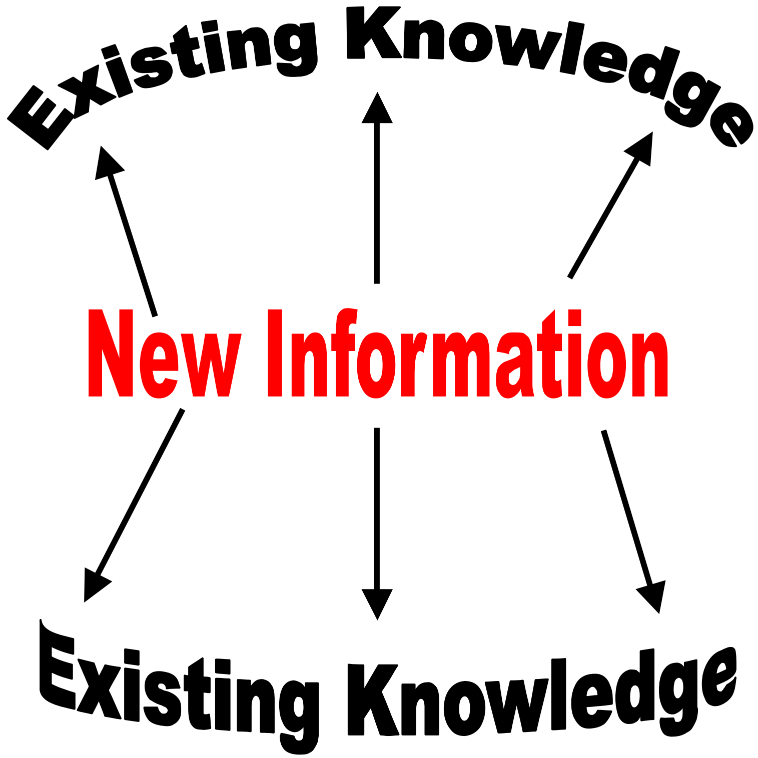
Existing Knowledge
New Information
Existing Knowledge

Recognizing individual differences

Connecting links & prior knowledge

Number of verbal & pictorial links to existing knowledge

Reference to life

Relationship to our own life

Style of learning

Preference for style of learning depending on exposure

Basic patterns of perception

Preference for input channel depending on first months of life

Recognizing individual differences

Auditory Learners	**Listening & Hearing**
	Fundamental principles explained
	Misunderstandings clarified in discussion
Visual Learners	**Observing & Seeing**
	Observing demonstration
	Reading & apprehending by insight & reasoning
Kinesthetic Learners	**Touching & Feeling**
	Experiencing meaning by handling & feeling
	Executing experiment

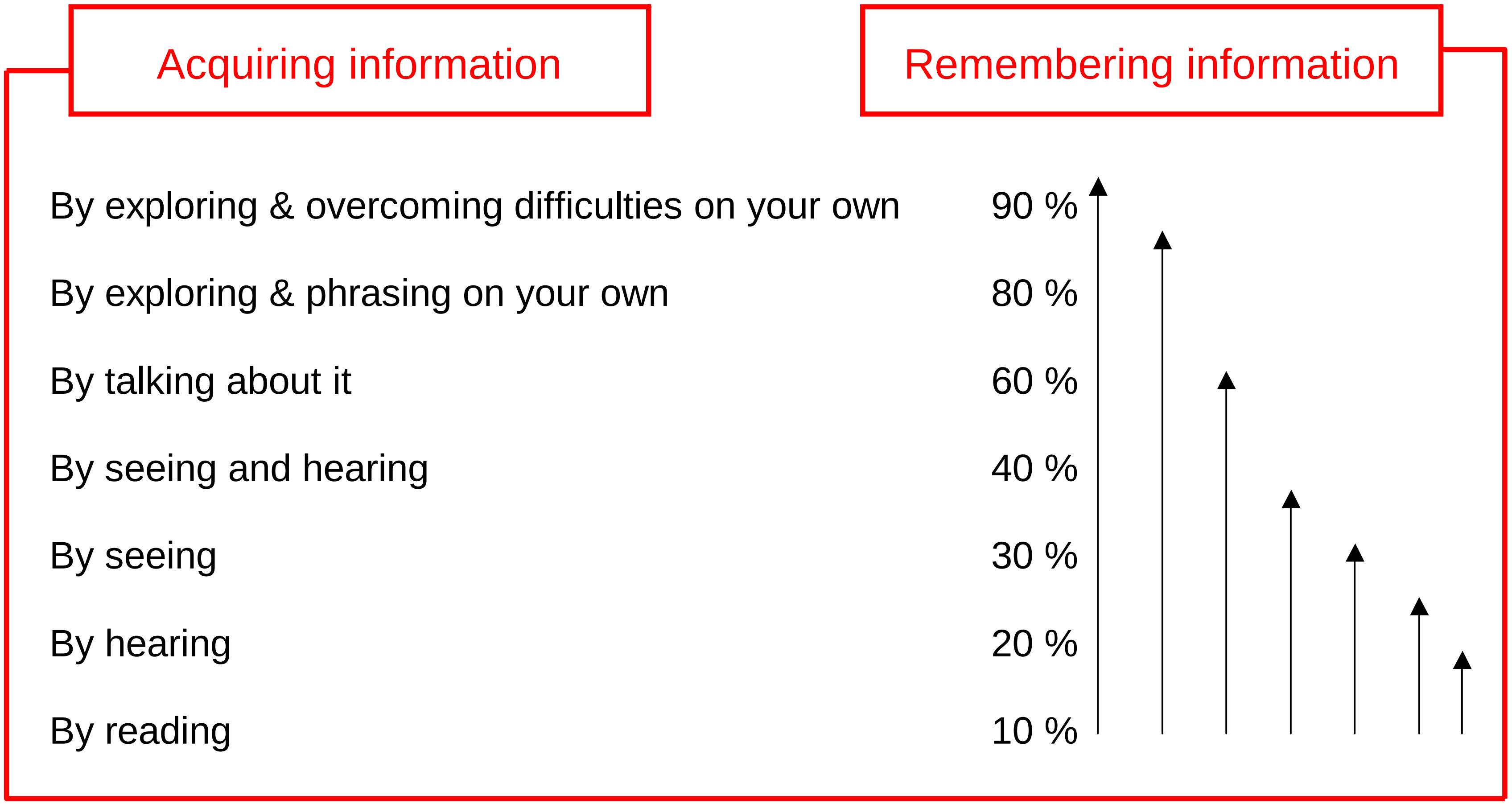
Acquiring information
Remembering information
By exploring & overcoming difficulties on your own
90 %
By exploring & phrasing on your own
80 %
By talking about it
60 %
By seeing and hearing
40 %
By seeing
30 %
By hearing
20 %
By reading
10 %

The Human Memory

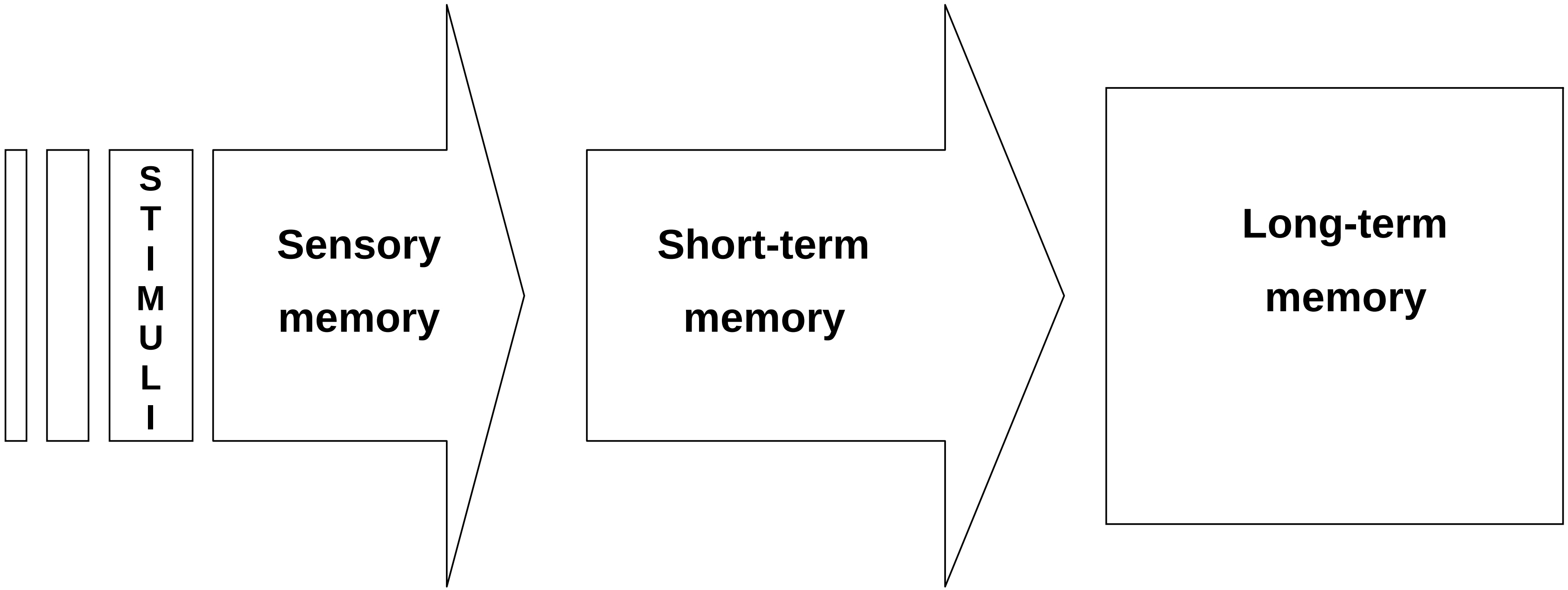

Storing information

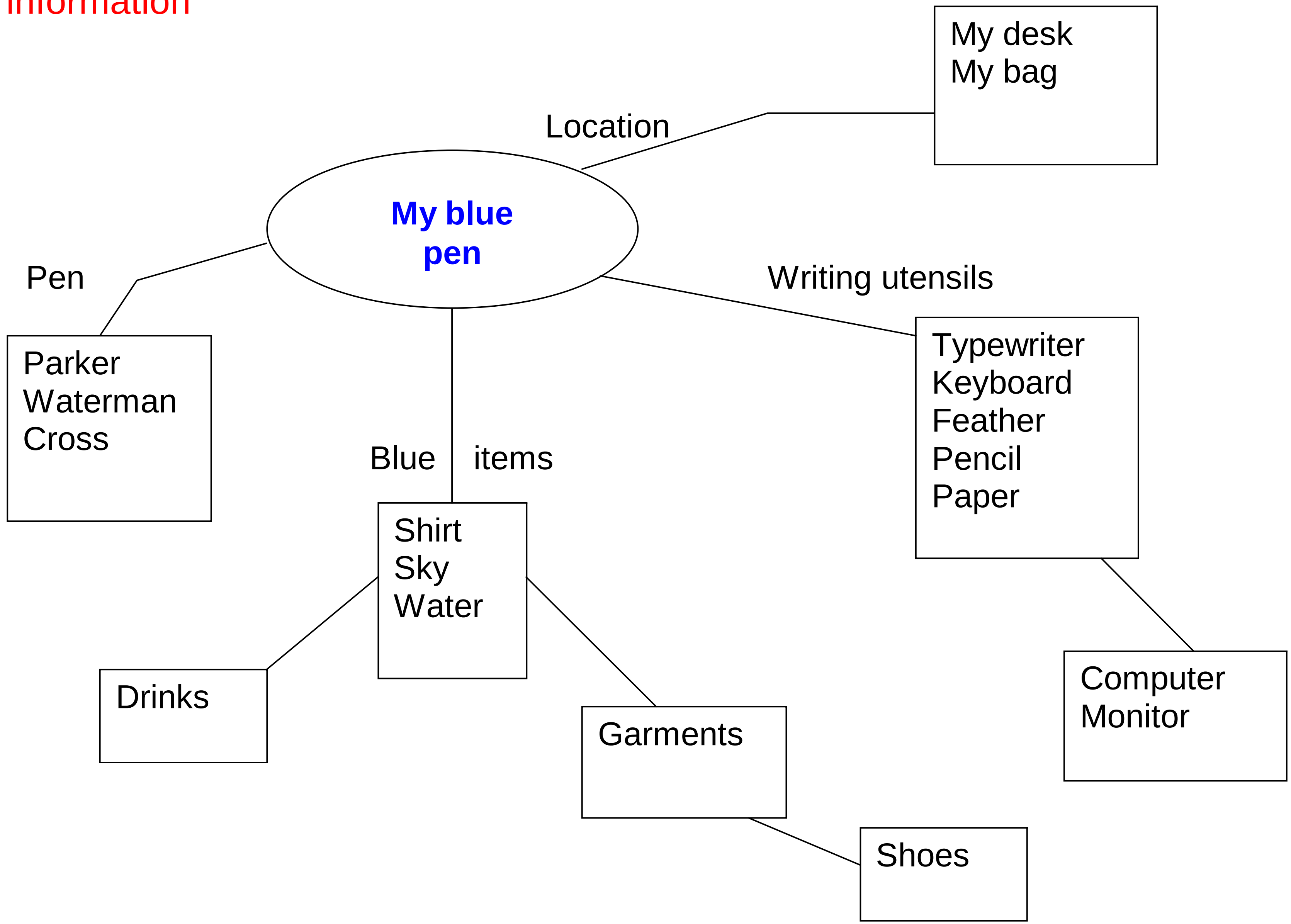

The left & the right brain

Left **L**ogic brain	c**R**eativ brain **R**ight
Speech	Creativity (new combinations)
Calculations	Artistic activity
Intellectual Analysis	Musical ability/Rhythm
Reading	Emotions
Writing	Recognition
Naming	Comprehension
Ordering	Perception of abstract patterns
Sequencing	Spatial abilities
Complex motor sequences	Facial expressions
Critique	Holistic ability
Evaluation	Intuition
Logic	Images
	Color

Learning how to learn should be part of the curriculum

Visual

Visual learners find it easier to take in new information through pictures, diagrams, charts, films etc.

Auditory

Verbal learners find it easier to take in new information through the spoken word.

Kinesthetic

Kinesthetic learners find it easier to take in new information through copying demonstrations and getting physically involved.

- [ ] When I touch an object and play with it, I can describe it much better as opposed to just thoroughly looking at it.
- [ ] Only when I have made a paper airplane myself do I know how it works. From observing alone I cannot remember it.
- [ ] Explaining me how to operate a machine or equipment, or being able to observe an experiment during instruction, I remember the process much better as opposed to only having a hands-on experience.
- [ ] I can find a way through town easier when I not only have been explained or shown it on the map, but also traced the route with my finger.
- [ ] I understand the design of a blossom or leaf better when looking at a drawing in a book than by examining it myself.
- [ ] I remember experiences better than conversations or what I read.

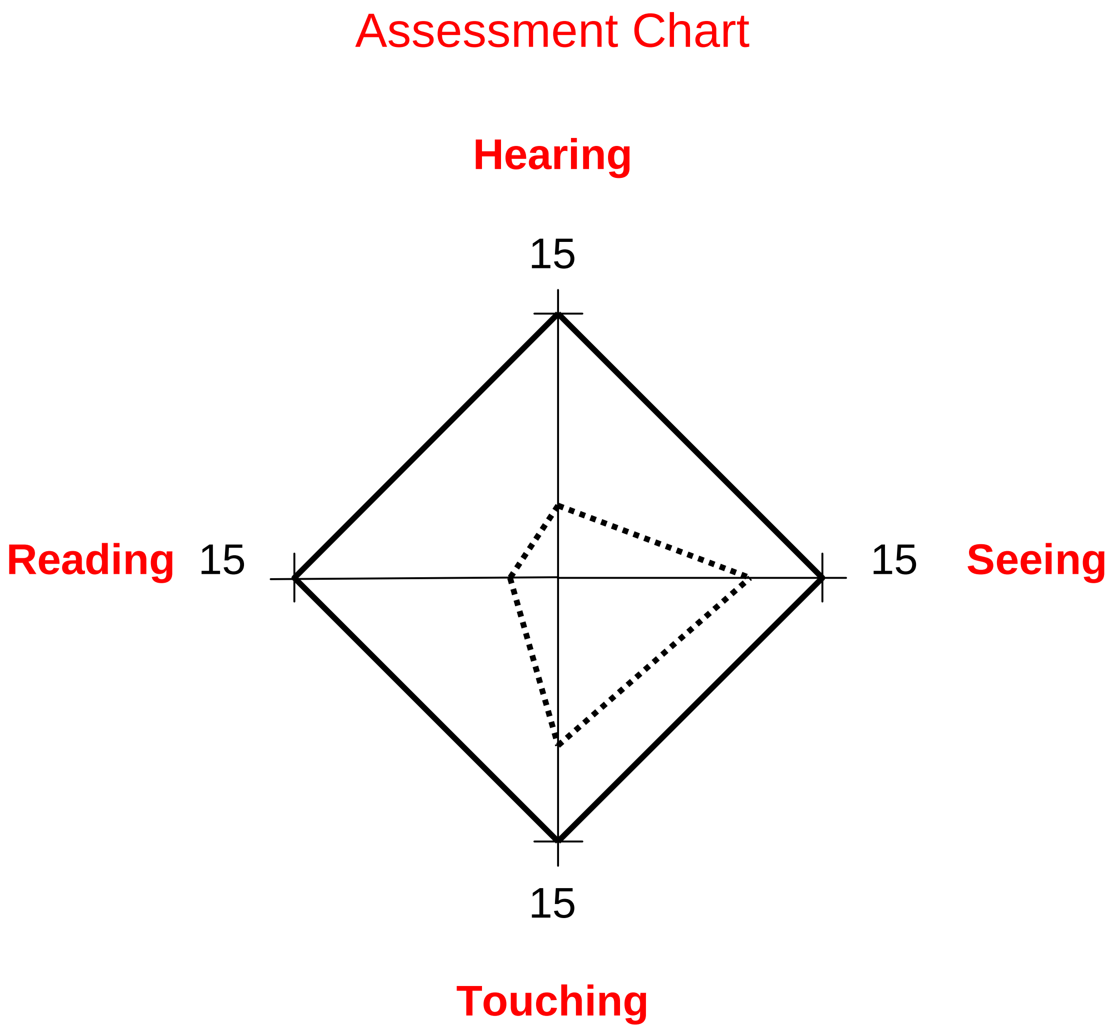

Assessment Chart
Hearing
15
Reading
15
15
Seeing
15
Touching

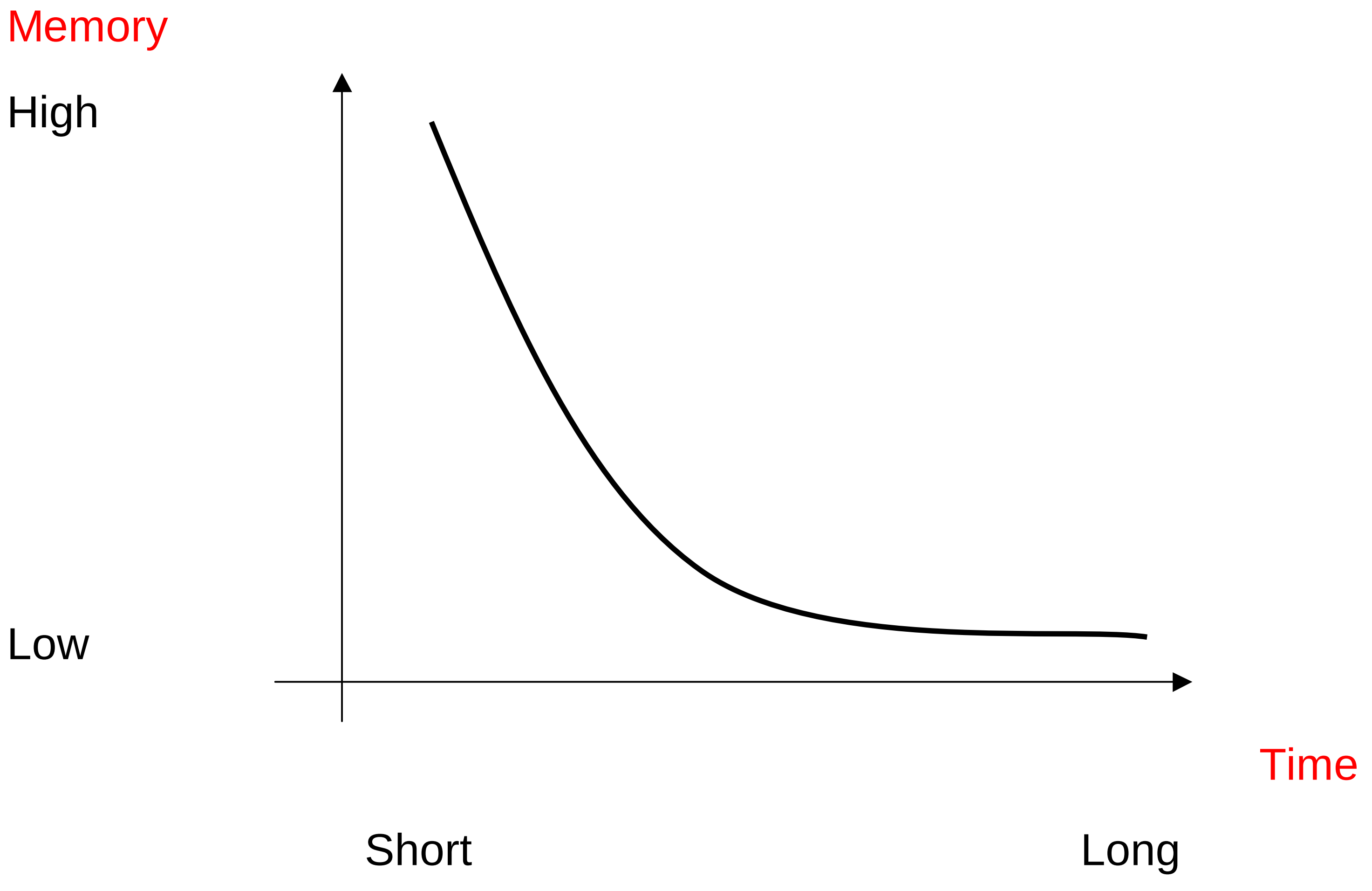

Chart 1: No repetition

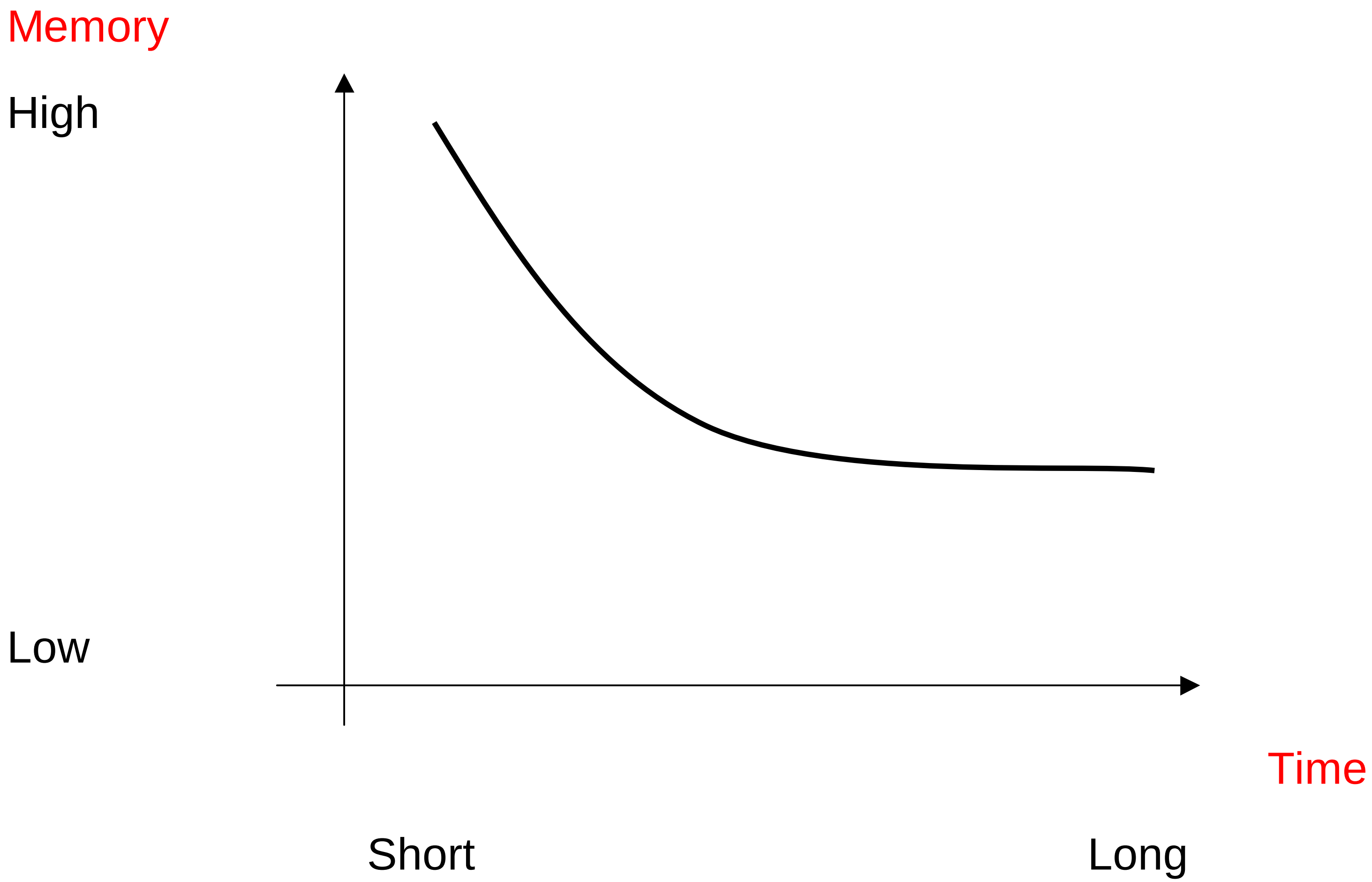

Chart 2: Repetition after 1 day

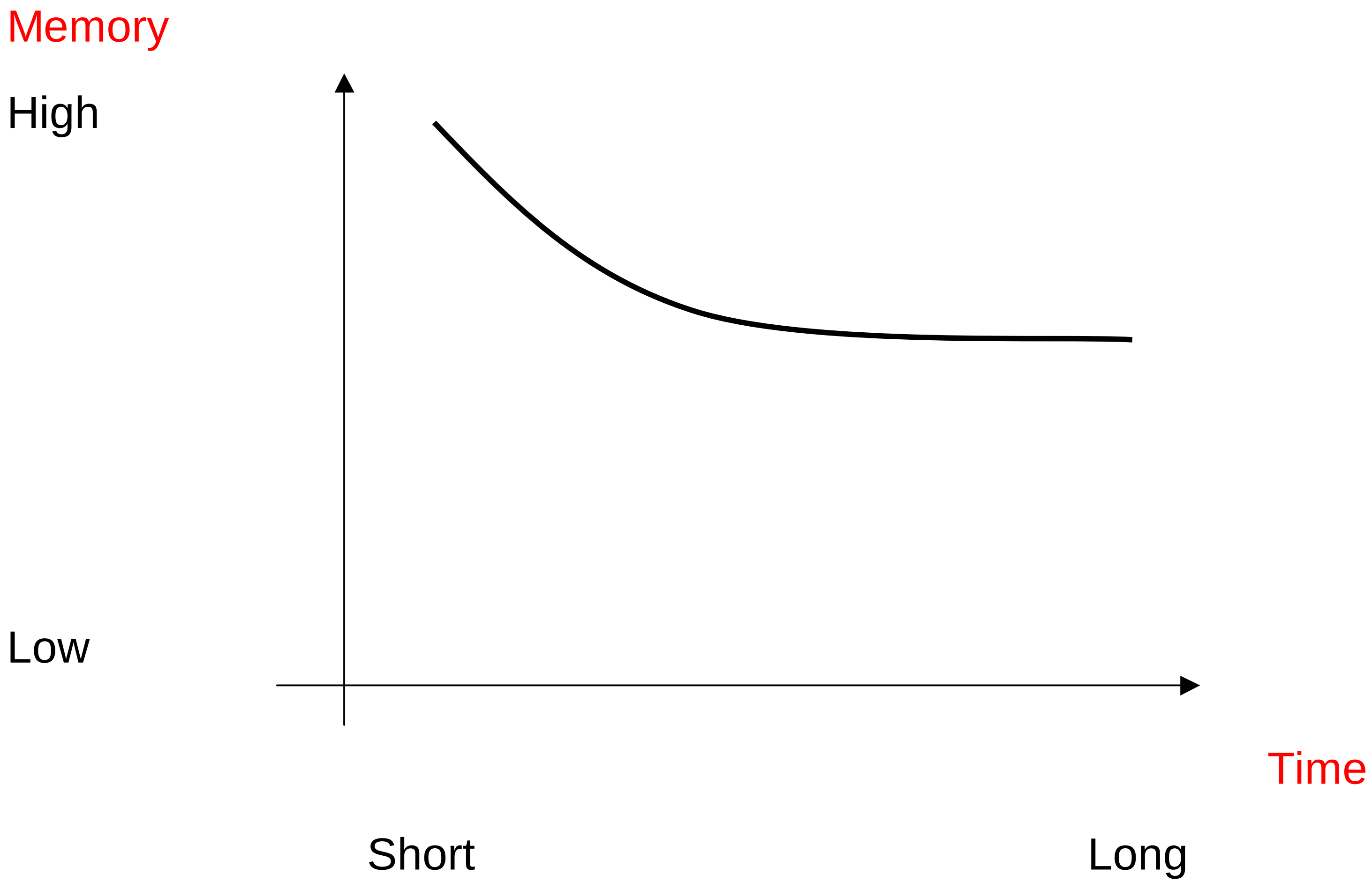

Chart 3: Repetition during same day

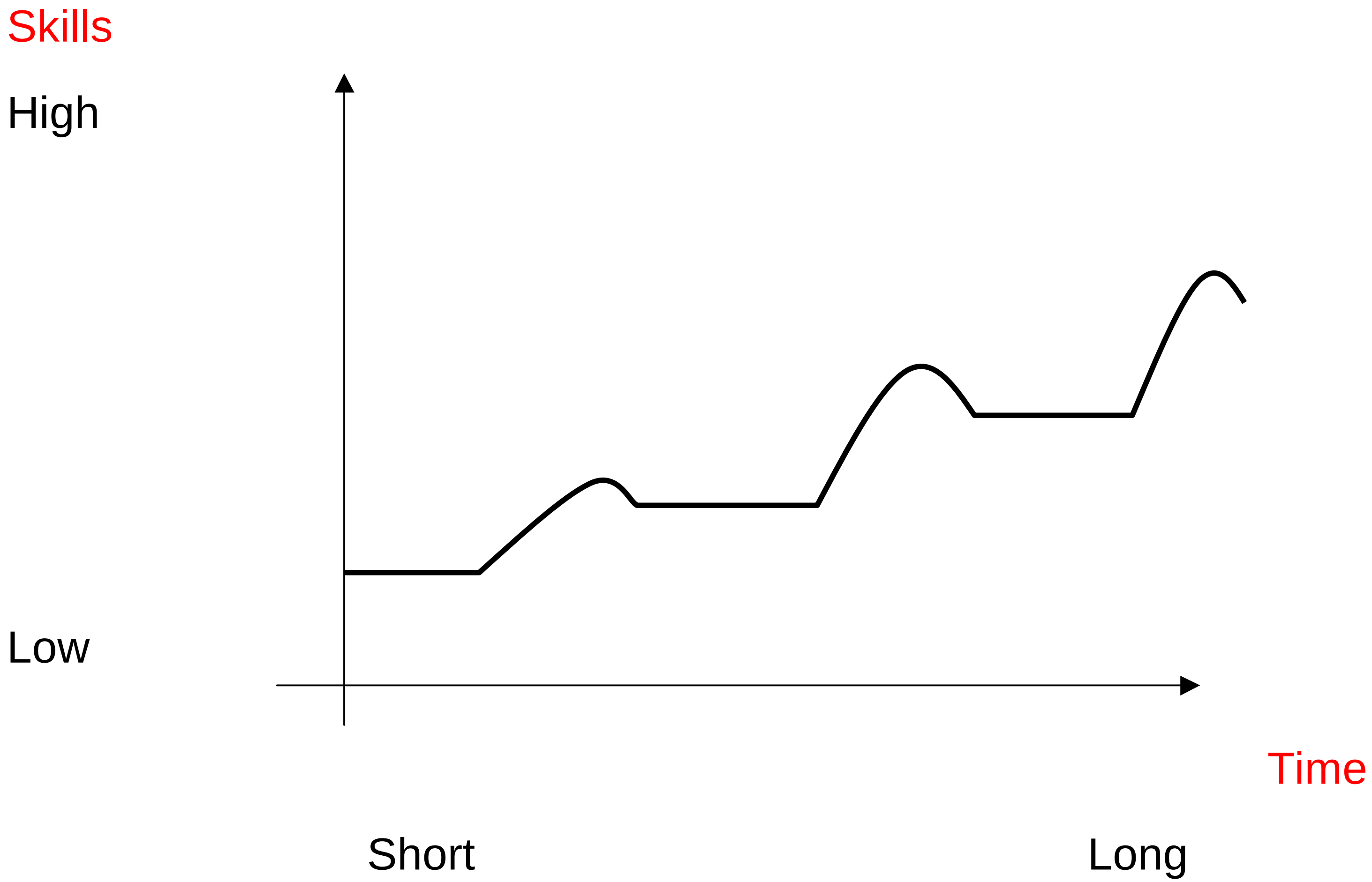

Chart 4: Ongoing repetition/exercise

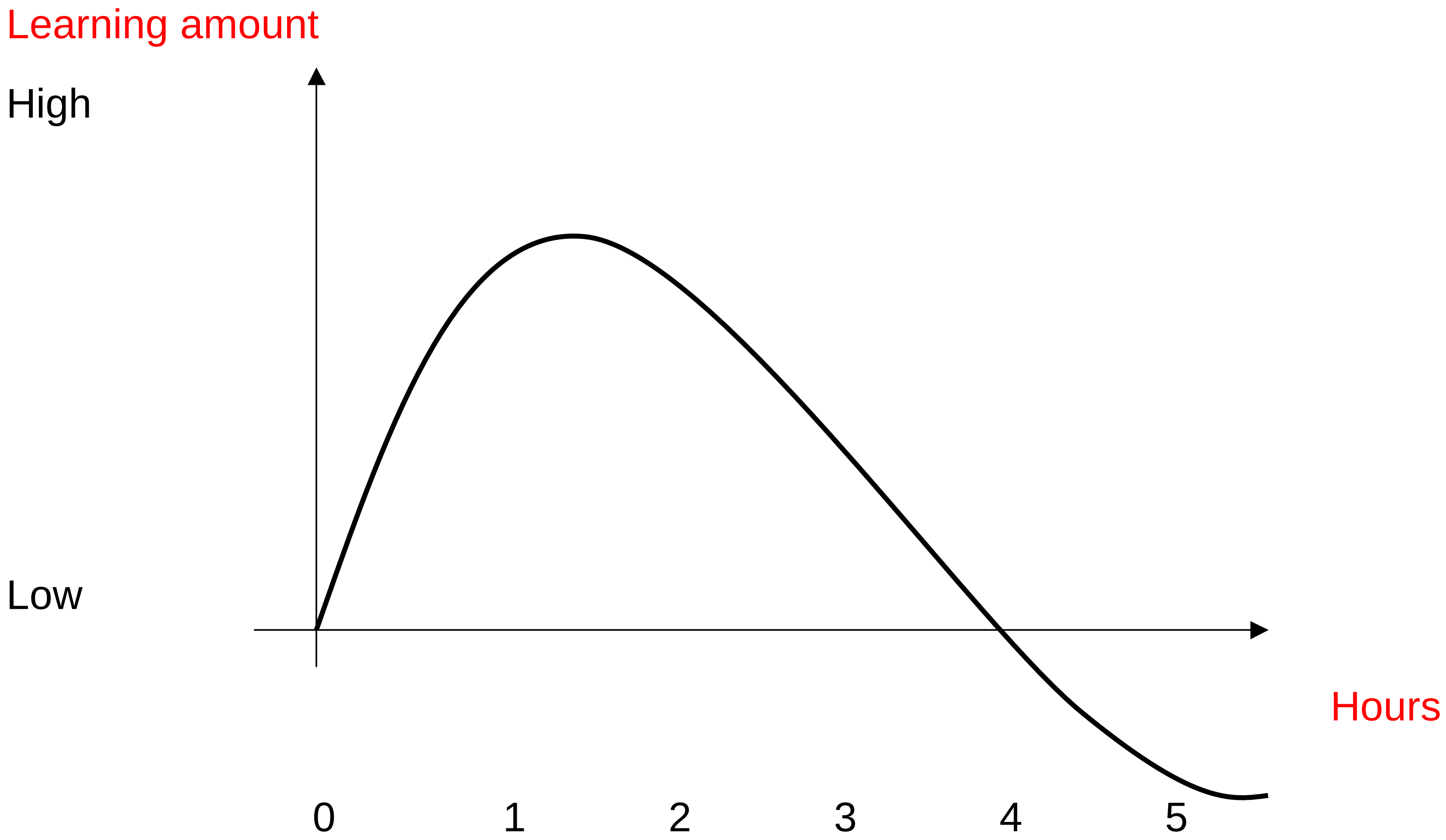

Chart 5: Continuous learning without breaks

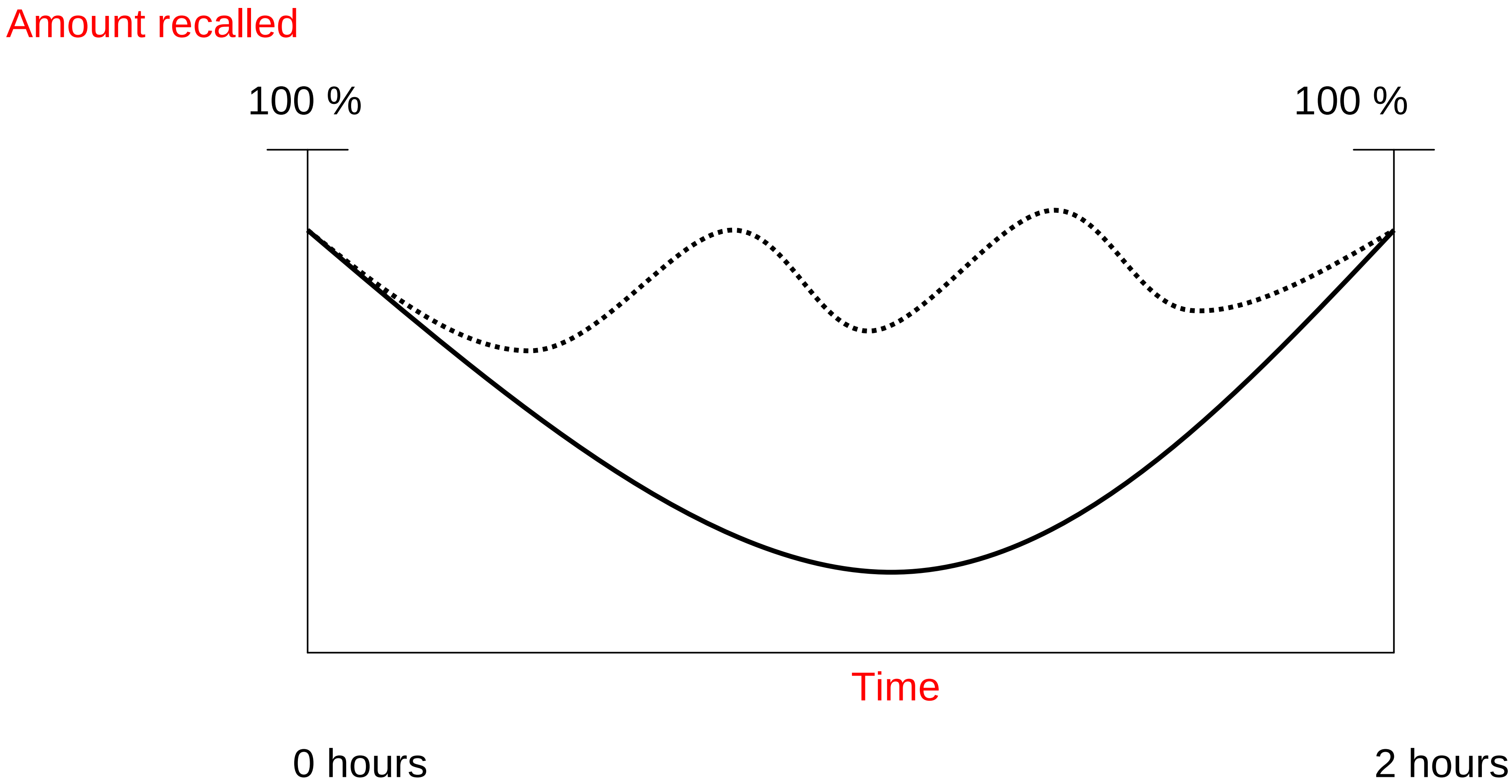

Chart 6: Learning with regular breaks

Planning Learning Activities

Sequencing

Variety

Easy start

Break-time

Portioning

Scheduling

Preparing for Exams

Planning

Working under time pressure

Staying calm

Clarifying the demands

Sticking to the topic

Rewarding ourselves

The Learning Environment

My learning results are best

- When music is played during learning
- When I am not distracted by any kind of noise
- When I am alone in the room
- When someone I like stays with me in the same room
- When I am together with my classmates
- When I am surrounded with strangers (atmosphere of a café)
- When I have eaten before I start learning
- When I can eat or drink during learning
- When I am in a good mood
- When I am angry or frustrated
- When I am looking forward to something nice after I finish learning

The Learning Atmosphere

Statements describing the learning atmosphere at school:

- I can follow some teachers very well, with others I have difficulties
- There are teachers I am afraid of
- With these teachers my marks are usually low
- With these teachers my marks are usually high
- I feel inhibited by my classmates or colleagues
- In a certain environment, I can concentrate myself very well, in others not
- I often experience thinking blockades and I do not understand despite repeated explanation

Learning Difficulties

Mental sphere:

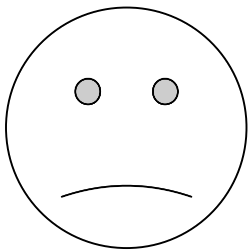

- Reduced ability to structure when acquiring information
- Reduced ability to abstract and conceptualize
- Limited ability to transfer known facts to new situations
- Restricted imagination
- Restricted perception
- Reduced memory performance
- Reduced ability to concentrate
- Language deficits

Learning Difficulties

Emotional sphere:

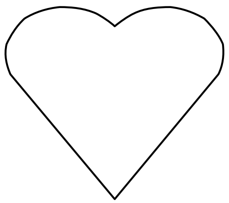

- Lacking emotional stability
- Strong orientation on needs when acting
- Rather passive drift approach than active problem solving and shaping of life
- Tendency for depression or aggression
- Deficiency in acknowledging and expressing own feelings
- Strong fear of failure
- Negative self-image with low self-esteem
- Low staying power, little perseverance
- Aversion against school and school tiredness

Learning Difficulties

Social sphere:

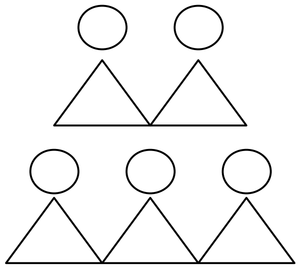

- Reduced ability and willingness for cooperation
- Difficulties with accepting and coping of social role
- Social behavior ranging between being the clown or being strongly inhibited
- Loner
- Emotional outbursts
- Problems to subject to social rules

Learning Difficulties

Physical sphere:

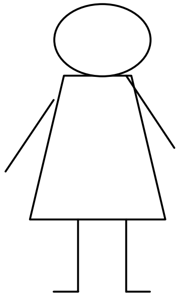

- Frequent delays in physical development such as muscle development, growth, sexual maturity etc.
- Reduced performance with regard to speed, coordination and strength during work proceedings
- Weakness with fine motor skills and therefore with precision
- Poor coordination between muscle activity and perception

Easy to remember:	Hard to remember:
Meaningful	Senseless
Connected	Isolated
Systematic	Unsystematic
Clearly arranged	Confusing

Structured Information Unstructured

Why skimming through a text?

Survey reading is useful when…

1 topic of text is not totally unknown to us

2 we look for specific information to answer given or self-constructed questions

3 we deal with a longer text of which only a part is important for us

4 we want to get a first impression before reading it in detail

5 we are already knowledgeable about a topic and only like to verify whether a text contains any new information for us

6 we quickly want to know whether a text contains any interesting or important information for us

Questions

Knowledge	Comprehension			Values
	Causes	Results	Countermeasures	
Asking for: Terms Numbers Names Details to be memorized	Lead further into topic and require thinking, combining and arguing			Concern personal opinions and values

Who?

What?

Where?

When?

Why?

How?

Frameworks for organized writing

1. ....
    1.1. ....
    1.2. ....
2. ....
    2.1. ....
    2.2. ....
    2.3. ....

Plan for outline

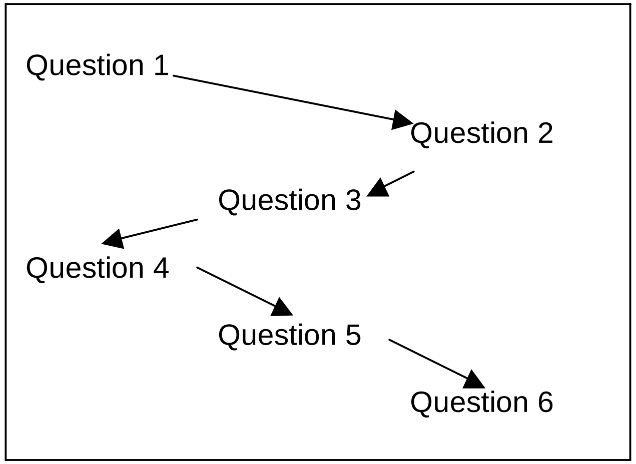

Chain of questions

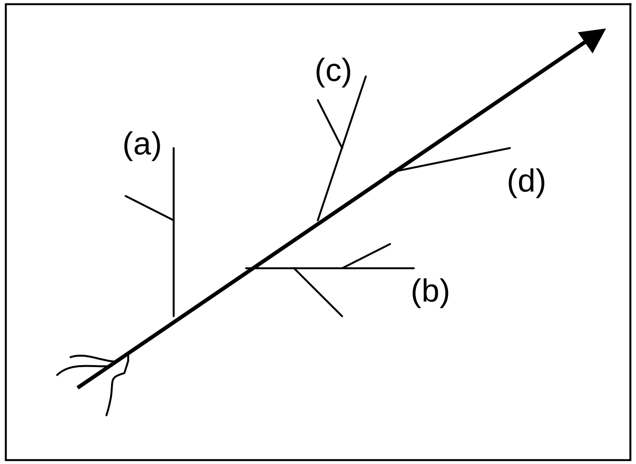

Tree frame

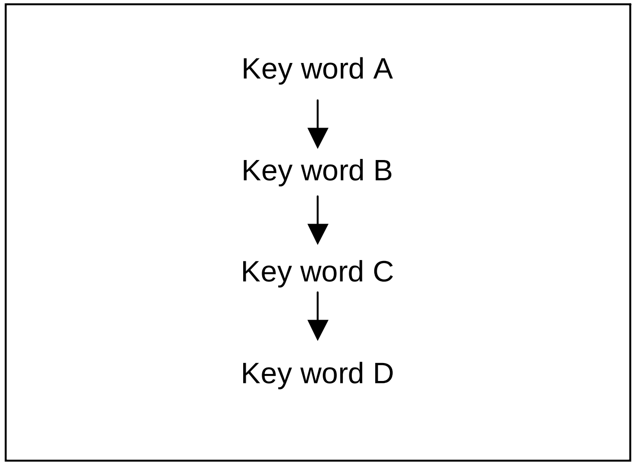

Chain of key words

Rules for Mind Mapping

1. We begin with a word, symbol or picture representing our topic.

   We put it at the center of a blank page.

   We use the paper in landscape format.

2. We write down key words.

   We connect them with lines (branches) radiating from our central image.

   We print key words for easier reading.

   We print one key word per line/branch.

   We create side branches for points related to the key words.

3. We use colors, pictures, dimensions and codes for emphasis/association.

   We highlight important points, e.g. using text marker.

   We illustrate relationships using colors, arrows etc.

Seminar Papers

Introduction	Topic, reasons for topic, importance of topic
Main part	Development of central ideas/main bulk of information
End	Summary/Result/Conclusion

Title page	Title/topic, subtitle, author, purpose of presentation, month & year
Table of content	List of numbered chapters and respective page number
Bibliography	List of books used for writing the paper stating name of author, title, place and year of publishing, appearing in alphabetical order
Quotes	Identified by quotation marks, statement of source inclusive page number

Requirements at work

1. Organizing and carrying out assignments

- Determination
- Accuracy
- Systematic course of action
- Organizational ability
- Coordinative ability

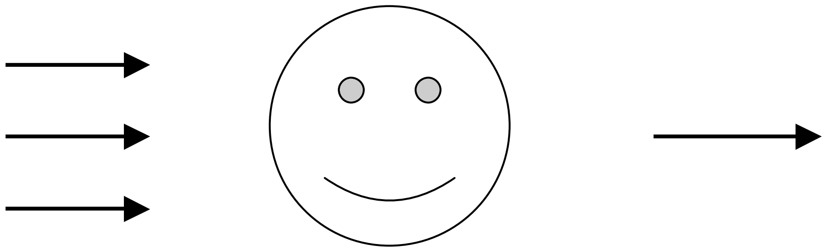

Requirements at work

2. Communication and cooperation

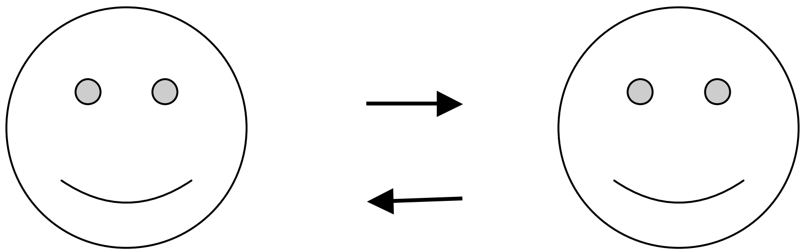

- Open-mindedness
- Ability to cooperate
- Ability to work in teams
- Appropriate behavior towards customers
- Appropriate behavior towards colleagues
- Intuition

Requirements at work

3. Application of learning techniques

- Using learning techniques
- Deductive thinking
- Ability to transfer methods to other areas
- Thinking in systems

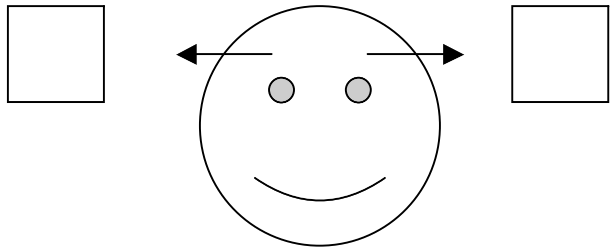

Requirements at work

4. Independence and responsibility

- Involvement
- Reliability
- Acting prudently
- Ability to criticize oneself
- Ability to express own opinion

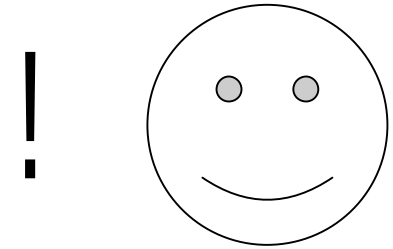

Requirements at work

5. Ability to work under stress

- Ability to concentrate
- Perseverance
- Adaptability

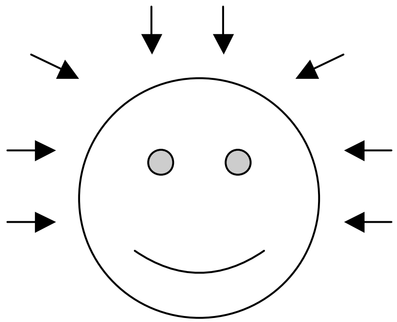

Importance of group work

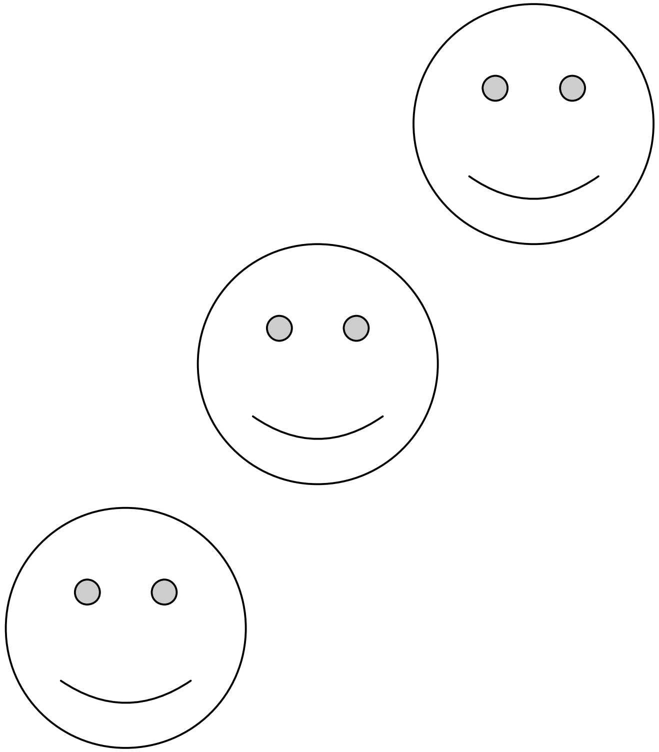

Associations

Explanations

Assistance

Activation

Check of performance

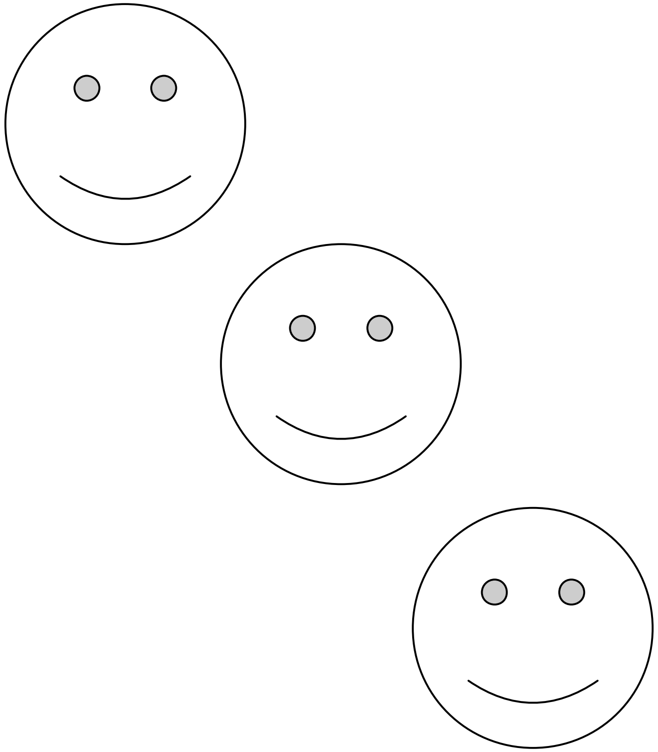

Group work & Social skills

Fair sharing of workload

Finding a compromise among different views

Using convincing technical arguments

Dealing with criticism

Accepting the superiority of other teams’ results in a fair appreciation

Effective Classroom Learning

A 4-day workshop for classroom teachers in high schools, colleges and professional technical skills training institutes

„Tell me - and I forget.
Show me - and I remember.
Let me do it - and I understand."

Confucius, 551 – 479 BC

Already Confucius, a Chinese philosopher of ancient times, knew what modern learning research recommends teachers and instructors of today's training facilities: in order to achieve high learning results, students have to be involved actively throughout the whole learning process. How to apply this simple but most effective rule to classroom teaching and learning, is the main focus of this seminar.

The essence of classroom teaching can be described as imparting new knowledge to students. A major requirement in that context is handling information, both for teachers and students alike. How the process of procuring, understanding and processing information can be enhanced, is one focus of the seminar: Through a variety of exercises, participants will learn how to apply reading, summarizing, researching and visualizaing techniques using the appropriate working tools.

Furthermore, participants will be exposed to the results of modern brain research and the resulting consequences for learning and teaching: While concepts and ideas are explained in brief lectures, a variety of tests, experiments and games will let participants experience the concrete meaning of these findings.

Topics covered during the training are:

- Brain Power
- Learning Strategies
- Handling Information
- Conclusions

All activities used during the training such as tests, games, experiments, exercises etc. can easily be used in the real classroom setting. The question of transfer of the seminar inputs to day-to-day teaching is constantly addressed throughout the training. The overall objectives of this seminar are to enable teachers to prepare lessons that cater for the different learner styles and focus around students' activities, to equip students with learning methodology, to diagnose major learning problems, and to counsel students with learning difficulties.

Number of participants: 12 to 14

Effective Classroom Learning, Day 1 - 1

No.	Title	Content/Activity	Material	Time
1	Introduction Associations	Each participant introduces him/herself by using one of the postcards displayed	Postcards with different motives	8.00 – 8.45
2	**Exercise:** Associations	Each participant is asked to find a way to learn name of facilitator	Whiteboard: Cornelia Frettloh	8.45 – 8.50
3	**Group work:** Associations Expectation setting	Pax are divided in 3 – 4 groups and invited to draw, write, scribble what they associate with learning on a big sheet On a separate sheet they note expectations and possible fears for this seminar	Big flipchart paper Crayons, markers Manila paper	8.50 – 9.10

4	Introduction: Outline workshop	Overview - objectives - content - methods	Flipchart	9.10 – 9.20
5	**Experiment:** Forming categories	Two volunteers (male/female) are asked to put all meta cards with words in respective labeled envelopes	2 sets of meta cards, envelopes	9.20 – 9.30
6	Lecture/Discussion Brain Power 1	Learning – general considerations Modern brain research: Neurons Brain development	Transparencies	9.30 – 10.00

	Break			10.00 – 10.15

Effective Classroom Learning, Day 1 - 2

7	**Game** Sensual Awareness Touching & Feeling 1	Walk around in room & shake hand with all other participants; note the difference in each handshake	Flipchart	10.15 – 10.25
8	Lecture/Demonstration Brain Power 2	Recap first input Developing neuronal network	Transparencies	10.25 – 10.40
9	**Test:** Learner Type	Each participant gets a test sheet and is asked to answer questions to find out which learner type he/she is; Assessment of test, comparison	Copies of test sheet Posters 3 learner types	10.40 – 10.55
10	Lecture/Demonstration Brain Power 3	Recognizing individual differences Demonstration of physic law: “Pressure equals force divided by area” Creating multi-channel information	Transparencies Hammer, different nails, wood Various pencils Clay, water bottle, coins, stand	10.55 – 11.30
11	**Exercise:** Learner types & lesson plan	Individual work: Pax select next topic in their teaching & work out how it can be presented catering for all three learner types	Matrix for lesson planning	11.30 – 12.00

	Lunch			12.00 – 13.00

Effective Classroom Learning, Day 1 - 3

12	**Game** Sensual Awareness Touching & Feeling 2	All pax touch item in sachet and try to identify content	Flipchart 14 sachets with different items	13.00 – 13.15
13	Assessment exercise Learner types	Participants present their work in groups of similar teaching expertise & decide which is the one to be presented to plenary 4 presentations of lesson plan to plenary	Manila paper for presentations	13.15 – 14.15
14	Lecture/Discussion Brain Power 3	The human memory	Transparencies	14.15 – 14.30
15	**Exercise:** Linking	Participants go back to groups and discuss how topic presented can be linked in manifold ways; 4 presentations to plenary	Manila paper for presentations	14.30 – 15.00

	Break			15.00 – 15.15

Effective Classroom Learning, Day 1 - 4

16	**Game** Sensual Awareness Touching & Feeling 3	Choose partner and write with finger on his/her back a word; let person guess the word; repeat if necessary; Change roles and execute exercise again	Flipchart	15.15 – 15.25
17	**Test:** Left & right brain	Participants are divided in 2 groups. One group gets information in form of a drawing, other group in written form. Both groups have to draw what they remember. Assessment of results	Copies of information/drawing Paper Stopwatch (5 min/8 min)	15.25 – 15.45
18	Lecture/Discussion Brain Power 4	The left and the right brain **Exercise:** “Folding hands” exercise “Brain Jogging” exercise Stimulating learning	Transparencies	15.45 – 16.10
19	**Presentations:** Consequences for teaching	Each participant gets a statement outlining a particular consequence for teaching. They present it to group, explain meaning & agree/disagree with statement (reasons!).	Statements	16.10 – 16.30
20	**Test:** Forming categories	2 volunteers are asked to retrieve particular cards from envelopes. Assessment of results/reasons for difficulties	Envelopes	16.30 – 16.45
21	Feedback	Complete sentence exercise: Most surprising insight/experience/sensation… for me today was….throw wool to next pax	Whiteboard with sentence Ball of wool	16.45 – 17.00

Effective Classroom Learning, Day 2 – 1

No.	Title	Content/Activity	Material	Time
1	**Exercise:** Repetition Day 1	Each participant chooses one copy of “Brain Power” transparency. Transparencies are put on OV, respective part. Explains meaning to group	Transparencies, paper copies	8.00 – 8.30
2	**Exercise:** Evaluation name learning	Pax write name of facilitator on card Exchange on strategies how to learn unusual material (association patterns)	Whiteboard: Cornelia Frettloh	8.30 – 8.40
3	**Exercise:** Learning deficits	Brainstorming on reasons for bad performance of students considering learning results; Clustering of cards; Outline of importance of learning methodology	Meta-cards, manila paper Transparency	8.40 – 9.00
4	**Test:** Input channel & memory performance	Participants reflect on 6 statements on OV on individual preference; Test executed & reflection on results; Display of all results to plenary Conclusions & transfer to daily teaching	Transparencies Test papers & utensils Stopwatch Posters 3 learner styles	9.15 – 10.00

	Break			10.00 – 10.15

Effective Classroom Learning, Day 2 - 2

5	**Game** Sensual Awareness Looking & Seeing 1	Gym exercises for the eyes: - circle your eyes - near/far - enlarge vision horizontally/vertically - increase perception closing eyes w palms	Flipchart information	10.15 – 10.20
6	Lecture/Discussion: Learning Strategies 1	Recap test result Enhancing memory & skills performance	Transparencies	10.20 – 10.40
7	**Exercise:** Time-management 1	3 groups prepare schedule for student Comparison of results Reasons for decisions	Exercise sheets Manila paper	10.40 – 11.45
8	Lecture/Discussion: Learning Strategies 2	Planning learning activities Preparing for exams	Transparencies	11.45 – 12.00

	Lunch			12.00 – 13.00

Effective Classroom Learning, Day 2 - 3

9	**Game** Sensual Awareness Looking & Seeing 2	Work in pairs: I am seeing something you cannot see and its color is… Once guessed, repeat other way round		13.00 – 13.10
10	**Assessment/Exercise:** Time-management 2	Self-Assessment: Use of time Sharing of results/transfer to teaching reality Recap input: Reconsideration of learning schedule: Any changes? Work in 3 respective groups	Assessment sheet “Time thieves”	13.10 – 13.35
11	**Field trip:** Learning Environment	Assessment of study place What changes should be made? Why? Input learning set-up, diet, rest etc.	Set-up of learning space (table, chair, utensils)	13.35 – 13.50
12	Lecture/Discussion Learning Strategies 3	Self-assessment: best individual learning environment; best atmosphere at school	Transparencies Voting cards	13.50 – 14.00
13	**Exercise:** Case Study	Work in 2 groups: Discuss case of Bong and find answers to questions 1 – 3	Exercise sheets “Case study” Manila paper	14.00 – 14.45
14	**Lecture/Discussion** Learning Strategies 4	Learning difficulties Comparing input with answers to question 1	Transparencies	14.45 – 15.00

	Break			15.00 – 15.15

Effective Classroom Learning, Day 2 - 4

15	**Game** Sensual Awareness Looking & Seeing 3	Visualizing: Participants make inner journey to favorite place…	Instructions	15.15 – 15.25
16	**Exercise:** Asking questions	Round 1: Give instructions for drawing. No questions allowed Round 2: Repeat. Questions allowed Compare results, time consumption	Band paper Instructions for drawing Stopwatch	15.25 – 15.35
17	**Lecture/Discussion** Learning Strategies 5	Overcoming difficulties: Pax read statements to plenary & give example Comparing input with answers to question 2 – 3	Transparency Cards with statements Learning index box	15.25 – 16.00
18	**Counseling circle:** Learning Difficulties	Choose from provided cards or make up own problem; 2 circles: Students/teachers students in outer circle present their problem to teacher in inner circle & ask advice; repeat 2 x change of inner/outer circle; repetition; Plenary: state your problem and share advice given to you; comment on quality	Pre-prepared meta-cards with problems, plain meta-cards Stopwatch (3 x 3,5 min, repeat)	16.10 – 16.50
19	Feedback	Participants write on cards what was useful for them & what they could do without	Manila paper harvest truck - garbage truck, meta-cards	16.50 – 17.00

Effective Classroom Learning, Day 3 – 1

No.	Title	Content/Activity	Material	Time
1	**Exercise:** Repetition Day 2	Participants are grouped in 4 sets and furnished with one learning dice per group: First round: They throw the dice and answer the question in group; others can help Second round: all questions are answered by respective group members in plenary	4 learning dices	8.00 – 8.45
2	Lecture/Discussion: Handling Information 1	General importance Reading techniques: - survey reading - enlarging the view span - 5 step reading method	Transparencies Poster “5-step reading method”	8.45 – 9.05
3	**Exercise:** Enlarging view span	Work in pairs: Each pair gets one set of reading pyramid + sheet for pulling; repeat exercise with partner	7 sets of 2 reading pyramids, one sheet for pulling	9.05 – 9.15
4	**Exercise:** 5 step reading method	Survey reading: 1:30 min Formulate 2 questions Execute other 3 steps of method	Exercise sheets “The human memory” Stopwatch	9.15 – 10.00

	Break			10.00 – 10.15

Effective Classroom Learning, Day 3 - 2

5	**Game** Sensual Awareness Smelling	Each participant is asked to establish the smell in each container	Flipchart information Containers with different products: brown sugar, soap, cinnamon, alcohol, vinegar, garlic…	10.15 – 10.30
6	Lecture/Discussion: Handling Information 2	Summarizing techniques - rules for marking	Transparency Poster "Marking rules"	10.30 – 10.40
7	**Exercise:** Marking	All participants mark exercise sheet & compare results of marking: - Planning learning activities	Exercise sheets: " Planning learning activities" red fine felt pens, pencils, text markers, rulers, erasers	10.40 – 11.00
8	**Exercise:** Visualizing	All participants prepare visualization of sheet "Human memory" All results get displayed and are compared	Exercise sheets: "The human memory" Band paper	11.00 – 11.30
9	**Competition game:** Re-enforcing rules for marking & reading	Pax work individually: - Rules for marking - Rules for fast survey reading - 5-step reading method	Exercise-sheets Stopwatch Prizes (6)	11.30 – 12.00

	Lunch			12.00 – 13.00

Effective Classroom Learning, Day 3 - 3

10	**Competition game** Reference books	Work in pairs: Check at all the 8 work stations & complete your answers	Work sheets Reference books (atlas, telephone directory, dictionary, handout seminar) Prizes (2)	13.00 – 14.00
11	Lecture/Discussion Handling information 3	Researching techniques: - Use of reference books, libraries, internet - Importance of questions - Different questions	Transparencies Example “Bird” in handout p 46 Example “What makes the light shine?” on whiteboard	14.00 – 14.15
12	**Exercise:** Formulating questions	Work in groups (expertise related): Choose topic & prepare questions Present to plenary Process importance for teachers/students	Manila or band paper	14.15 – 14.45
13	**Competition game:** Working tools	Work in 2 groups: Solve crossword puzzle “Effective Learning”	2 sheets with crossword puzzle; question sheet Prizes (7)	14.45 – 14.55
14	**Game** Sensual Awareness Tasting	Try out 2 types of same basic ingredient and state the difference in taste	Flipchart information Food for tasting (mango, peanuts)	14.55 – 15.00

	Break			15.00 – 15.15

Effective Classroom Learning, Day 3 - 4

15	Lecture/Discussion Handling information 4	Working tools - use of different tools - how to introduce in teaching (exercises) Visualizing techniques - charts - diagrams - tables - cluster - definition networks	Tools on display Handouts pages 47 – 54 Transparencies	15.15 – 15.45
16	**Exercise:** Visualizing information	Participants choose one workstation and visualize the information given in a sketch drawing. When completed, they move on to the next station. Outputs are exhibited and compared in plenary. Importance for teachers/students is processed.	Band paper Exercise sheets for 8 workstations	15.45 – 16.50
17	Feedback	Participants are asked to evaluate by setting their points in relation to content/methods and barometer atmosphere	Charts Points	16.50 – 17.00

Effective Classroom Learning, Day 4 – 1

No.	Title	Content/Activity	Material	Time
1	**Exercise:** Repetition Day 4	Participants choose one type of exercise that they want to use in their teaching; explain exercise to plenary	Meta-cards with samples of learning exercises	8.00 – 8.30
2	**Brainstorming**	Expectations of employers towards trainees/staff	Meta cards	8.30 – 8.45
3	Lecture/Discussion: Conclusions 1	Learning methodology and the world of employment The importance of group work Mind mapping	Transparencies Poster "Concept Learning"	8.45 – 9.15
4	**Exercise:** Group work	Individual preparation for group work: Mind map on topic "Overhead projector" Participants divided in 2 groups: Each group has to present how to work with the overhead projector; presentations will be judged on: - knowledge - communication - creativity - team work	Different transparencies, ov markers, 2 projectors, band paper	9.15 – 11.00

	Break			9.45 – 10.00

Effective Classroom Learning, Day 4 - 2

5	**Game** Sensual Awareness Listening	Participants are asked to close eyes & identify noise one by one	Flipchart information Items to produce noises: water jug, cup, teaspoon, ball, handkerchief, book, paper…	11.00 – 11.15
6	**Exercise:** Group work	Presentations of group work - Feedback - Assessment presentations - Transfer to teaching reality	Voting cards	11.15 – 12.00

	Lunch			12.00 – 13.00

7	**Lecture/Discussion** **Conclusions 2**	Recap/analysis of - Learning difficulties - Expectations employers - Learning – a broadened concept	Results brainstorming on "Learning problems" "Expectations employer" Transparency	13.00 – 13.10
8	**Role play:** Pro & contra debate	All participants are asked to convince their director why it is important to introduce learning methodology in curriculum	2 Pro & 1 Contra chair	13.10 – 13.45
9	**Game** Sensual Awareness Listening	Participants are asked to close eyes & listen to music and input going mentally through 4 seminar days	Flipchart information Cd, player	11.00 – 11.15
10	**Evaluation/Graduation**	Distributing evaluation forms Feedback circle Handing over of certificates	Evaluation forms Ball Certificates	13.45 – 14.30

Participant Reaction Evaluation Form

Use the scale 1 to 5 to express your reactions to the course based on the following statement: (Please circle only one choice for each statement.)

Strongly DISAGREE 1	Disagree 2	Neither 3	Agree 4	Strongly AGREE 5

Overall, I was satisfied with this seminar.	1	2	3	4	5
My knowledge about learning increased as a result of this seminar.	1	2	3	4	5
I can apply what I learned in this seminar to my work.	1	2	3	4	5
It was easy for me to understand the seminar content.	1	2	3	4	5
The methods used to deliver the seminar content were effective.	1	2	3	4	5
Games, exercises and tests stimulated my learning a lot.	1	2	3	4	5
Material for the participants was adequate.	1	2	3	4	5
The instructor explained the subject clearly.	1	2	3	4	5
The instructor answered my questions clearly.	1	2	3	4	5
The instructor was supportive and helpful.	1	2	3	4	5
I also learned from other participants throughout the seminar.	1	2	3	4	5
I would recommend this seminar to my colleagues.	1	2	3	4	5

What new things/changes can you apply to your job – immediately and after some time?

____

____

____

What parts of the seminar did you enjoy most? Why?

____

____

____

What parts of the seminar did you not enjoy? Why?

____

____

____

Further recommendation/comments not covered by this evaluation form:

____

____

(Continue on the back if you need more space!)

Thank you for your answers!

Effective Classroom Learning

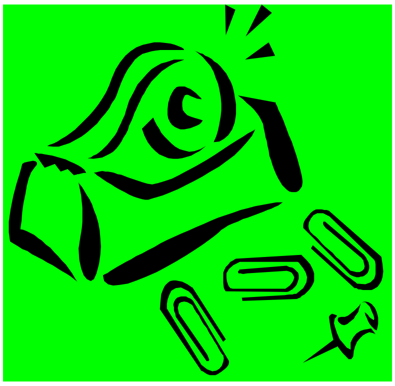

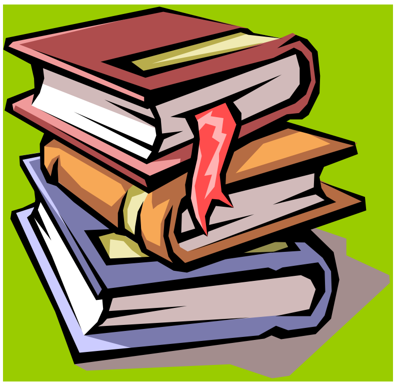

A seminar for teachers and trainers in professional and technical vocational skills training

Content

Introduction

“Tell me – and I forget. Show me – and I remember. Let me do it – and I understand.”

This saying of the Chinese philosopher Confuzius is, in a way, the essence of the seminar coming along with this handout: “Effective Classroom Learning” aims to make teachers and trainers aware that achieving high learning results means to get students actively involved throughout the whole learning process.

In order to understand this simple but most effective rule the first part of the training is centered round the function of the brain in the context of learning. The second part of the training translates these findings to day-to-day teaching: How teachers and trainers can assist their students in becoming self-reliant learners, how they can diagnose major learning problems and how they can counsel students with learning difficulties, all of which leads to a new concept of learning.

This handout coming along with the training covers the main inputs given during the seminar. It also provides the background information for the various exercises executed. While the seminar itself is built around different learning experiences for its participants, the handout provides further elaboration on the respective topics for those who want to go deeper into the subject. By itself, this material is intended to create understanding of the numerous factors influencing learning and to raise the awareness for the importance of learning in modern societies.

Cornelia Frettlöh

Ded-consultant to the University of Southern Philippines Foundation, USPF
Salinas Drive, Lahug, Cebu City
April 2003

Unit 1 Brain Power

1. Learning – general considerations

Learning has gained more and more attention over the past years. Be it policy makers, be it business people, be it teachers or parents, all stress the importance of learning: not only is there far more information available than it used to be, it is also outdated much faster than in previous days, which again leads to changes in the working environment. Hence, continuous lifelong learning has become an indispensable part of our working lives.

But what really is learning? Which factors influence learning? And how can the process of learning be improved? Before we try to answer these questions, let us first agree on what we mean by learning. One of the broadest definitions states that learning means change of behavior due to experiences: Being exposed to new knowledge, experiencing new skills, exploring new attitudes leads to new patterns of behavior. We know more than before, we can do things better than before, we hold a different opinion than before - all of which allows us to behave differently than before.

Through learning we acquire new…

Knowledge

Learning = **Change of behavior due to experiences**

Skills

Attitudes

New patterns of behavior

However, behaving differently than before requires that we can recall what we have learned previously. Prior to that, it also requires that we really understand what we learn. The learning process therefore involves four major steps: experiencing something new, appreciating and understanding this new experience, storing it in our memory and recalling it later.

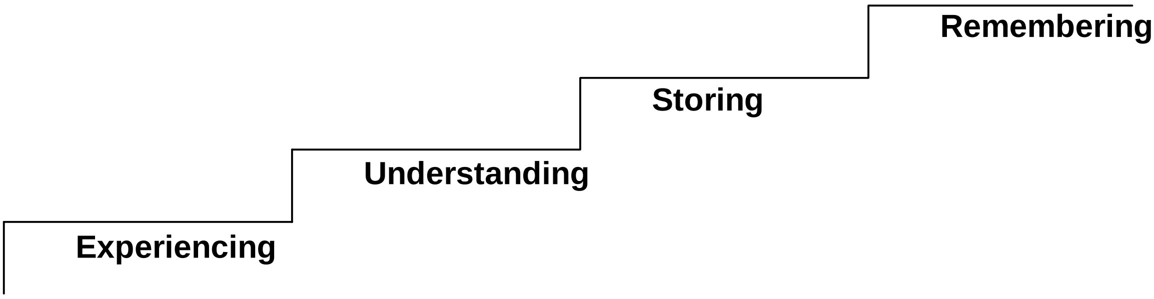

The question now is: How can this process be enhanced? Modern brain research has come up with interesting insights, which help us to find answers to this question.

2. Learning and modern brain research

In order to remember what we have learned new information needs to be stored in our memory in a way that it can be retrieved any time. One of the biggest difficulties within that context is to protect ourselves from learning too much: Since innumerable impressions and perceptions compete with one another for our attention, our memory has to decide what to store. If not, within no time we would just drown in senseless data trash. Therefore, our memory has to perform two major tasks:

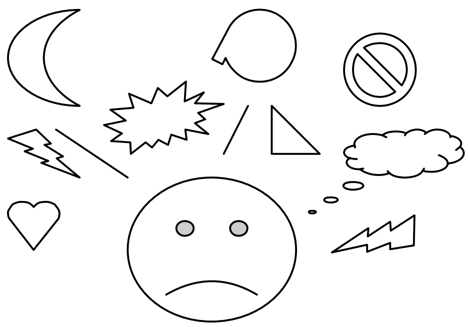

At first, it has to distill what it considers worth-while remembering from all the thoughts, ideas, impressions, experiences and perceptions we are exposed to. So our brain has to differentiate between important and unimportant information.

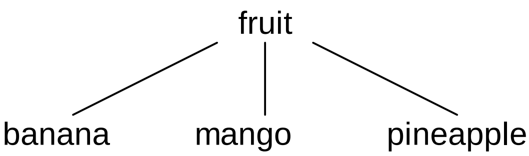

Next, this extract has to be put in a certain order. For this reason we need categories. For example, to remember mango, banana and pineapple, we need the category *fruit*. Categories allow us to link different bits of information among each other and to put them in a systematic order. In return, this also allows us to retrieve stored information more easily.

Modern brain research has identified neurons as the crucial elements in performing these two major tasks: A network of 10 – 15 billion neurons filters and sorts all information that is stored in our memory.

Neurons are the units that make up the human nerve system. They are mainly found in the brain (approximately 10 – 12 billion), the spinal cord, the brain stem (connection between brain and spinal cord) and the whole body in form of threadlike branches. A bundle of neurons are called a nerve.

A neuron consists of the *cell body*, *dendrites* (hair-like extensions of the cell body), the *axon* (an extension of the cell which can have lots of branches), and *synapses* (the point where the axon of one neuron connects with the dendrite of another). The function of neurons is to transmit impulses in form of electrical and chemical changes. The receiving structure of electrical impulses are the dendrites, the transmitting structure are the axons.

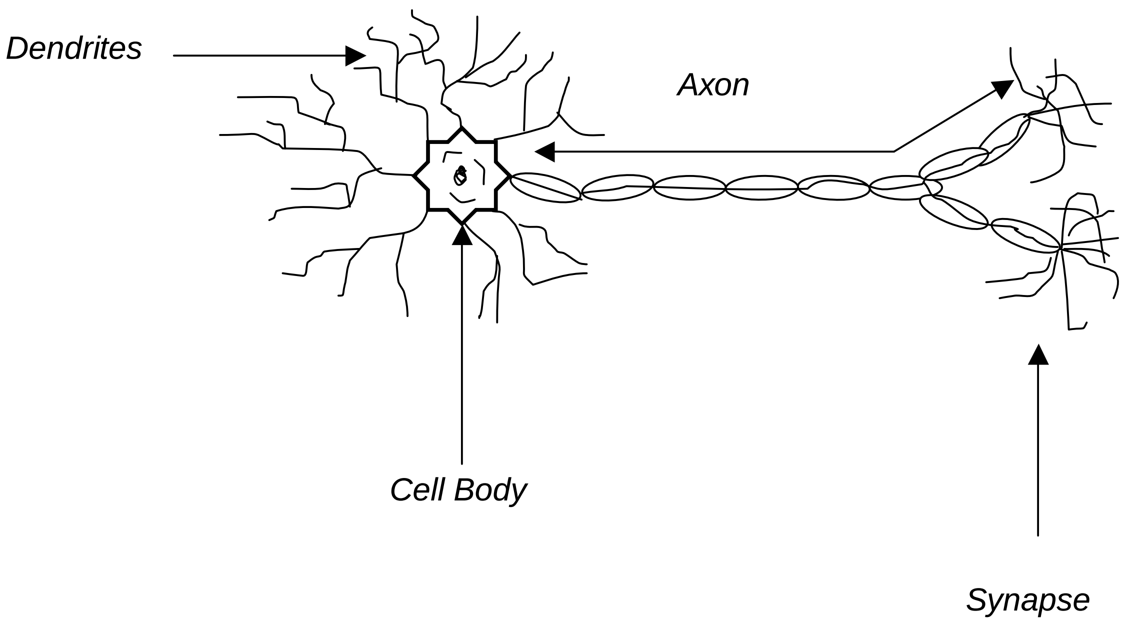

Schematic drawing of a neuron: 20,000 neurons would fit on a pin head.

Repeated transmission of impulses between two cells enhances these activities; pathways are being established. Each stimulus a human being is exposed to changes this neuronal network by strengthening a particular connection and, eventually, weakening another. All learning experiences can be translated into this basic reaction pattern. A closer look at the development of the human brain will reveal further insights.

Deutscher Entwicklungsdienst

3. Brain development

When we are born, the major part of our brain is already developed. Its actual growth is finally completed during the following months. With regard to the neuronal net itself, its maturation takes place in two phases: from birth until the age of 2 and from childhood until the end of adolescence.

The neurons of a newly born baby are connected among each other like in an even, densely woven net. This neuronal net passes on impulses in all directions. Until the age of two the number of these connections (synapses) increases.

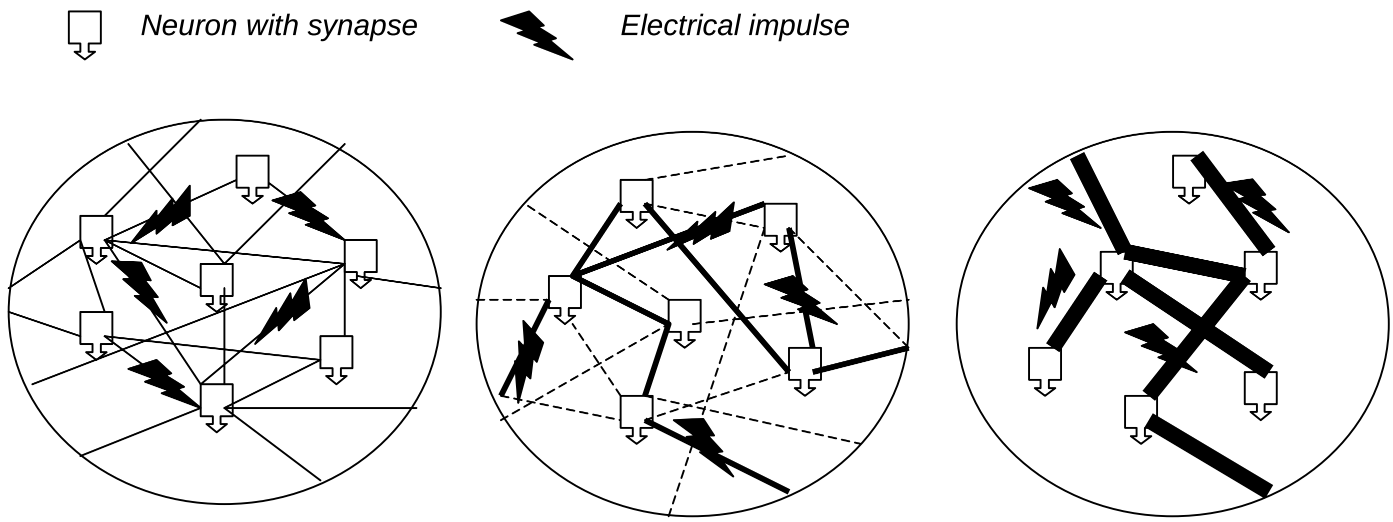

Age 0 – 2 *Age 2 – end of adolescence* *Adult*

With the process of learning setting in, connections between particular neurons (synapses) are strengthened since the number of impulses increases. On the other hand, connections rarely used will slowly wither.

After adolescence, learning mainly consists of using the existing connections. During adulthood, hardly any new neuronal connections will be added.

This shaping of the brain is strongly influenced by the environment each individual is exposed to. Particularly during the first two years, sensual impressions like noise, smell, taste have as much influence on the brain's development as the type of food a baby gets, the air it breathes, the people it is relating with. As adults we cannot recall these first experiences, yet they have a strong impact on our whole life. They determine the way we think by establishing perception patterns. These patterns differ from individual to individual, family to family, region to region, country to country, culture to culture.

The way the brain is structured is irreversible. It corresponds and is highly compatible with the immediate environment we have been exposed to during our first months of life. Likings and dislikes are being developed, preferences for visual, audio or touch established. For example, an African baby that is being carried around on its mother's back during its first months is likely to develop a high preference for touch. Likewise, the brain of a baby growing up in a very deprived environment or suffering malnourishment will never develop its full potential.

This process can also be expressed in computer language: during the first months the hardware is installed. Correspondingly, at the age of two until the end of adolescence the installation of the software takes place. In a way, the circuit diagram of the neurons is being established. The decision is made which neurons are connected among each other. Thus the structure of thinking of the future adult is basically being determined.

As adults, we almost exclusively rely on this existing neuronal network since hardly any new connections are being established. This also helps to explain why adult learners usually have problems accepting ways of learning they are not familiar with: in a way, they lack the software. This difficulty is also expressed in the saying, "You can't teach an old dog new tricks". On the other hand, the more varied the stimulation during childhood and adolescence, the more complex structures are being formed which, in return, offer more points of reference for future learning.

Looking at these findings, we can already draw two major conclusions: First, it is quite obvious that human beings need a stimulating environment right from the start for the optimal development of their brain since intelligence is not so much depending on the number of neurons but on the number of connections. Second, it is also obvious that the numerous individual differences among learners need to be recognized in the learning and teaching process.

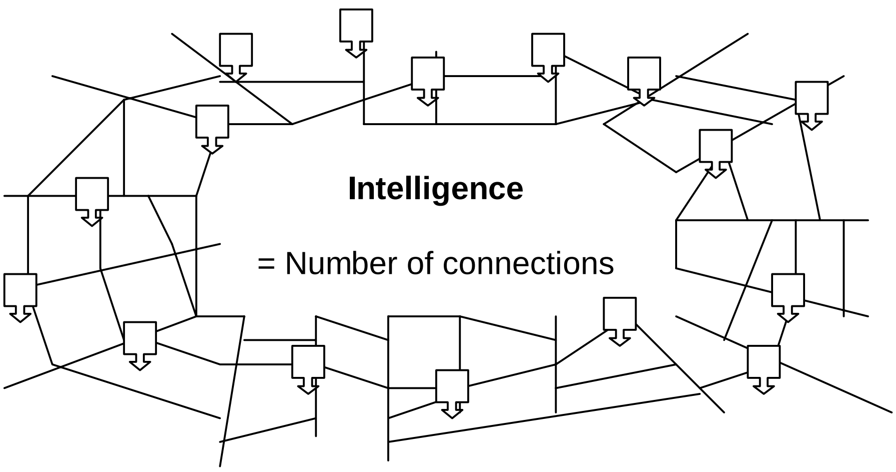

4. Developing the neuronal network

Learning is a self-stimulating process: the more we know, the easier we learn. The more English a student knows, the easier and faster he/she learns even more English. The secret behind this formula is very simple: whenever we can link new information to already existing information – unknown to known information -, we stand a good chance that our learning efforts will be successful. We stand an even better chance, when we can link new information not only in one but manifold ways – when new information appears in different connections, when we can incorporate it into our existing net of information by linking it to various other points of reference.

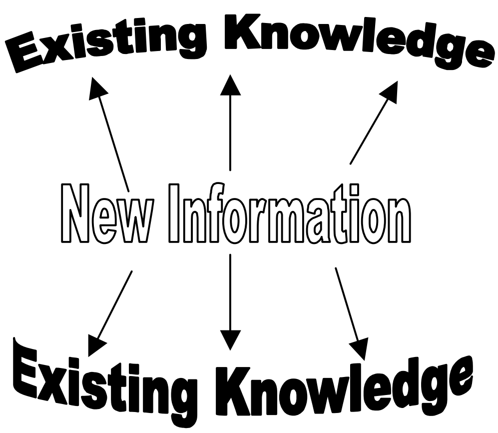

The more we know, the more we can perceive. Our knowledge influences everything we perceive, since perception relies on the ability to recognize. What we don't know, we can only perceive very vaguely, if at all. For example, words and letters in a foreign language are only noise and lines without meaning for us. Increasing our knowledge means to enhance our ability to perceive. The best basis for learning – perceiving, understanding, storing and remembering – is a broad network of knowledge.

This also explains the advantage adult learners have over young learners: grown-up people have a much greater professional and life experience which offers far more points of reference for connecting new information.

To support the development of the neuronal network of children and young students, they should be exposed to challenging tasks from early age on. Teaching approaches that lead to sudden insights should be fostered. Instead of providing students with ready-made solutions (spoon feeding), they should be encouraged to come up with their own ideas on how to solve a particular problem (discovery method). The feeling of pleasure that goes along with the successful, independent solving of a task is far more sustainable than any reward from outside. Thus, a positive attitude towards learning is reinforced.

The more students can try on their own and experiment with familiar day-to-day items during the process of learning, the faster they acquire new knowledge. Whenever possible, the learning content should also relate to daily life experience. Not only does it stir the interest of students and motivate them, it once again means applying the very simple but most effective teaching principle: establishing links between known and unknown information.

5. Recognizing individual differences

Though there are a lot of common features with regard to the learning process, there are many differences when it comes to the individual learner. Considering the development of the brain, we know that every human being is different. These differences also influence the style of learning of each individual. They depend on a wide variety of factors:

Connecting links & prior knowledge

As we said already, understanding means linking and incorporating new information to and into knowledge already stored. Thus, how quickly we understand something is also dependent on the number of verbal and pictorial connecting links and prior knowledge.

Reference to life

The assimilation of an item of information, attention, interest, motivation for a subject are associated with the question whether we can draw a relationship to our own life, whether we see a sense or use in the subject matter.

Style of learning

Whether we can learn facts better through lecture or group work or through other methods, whether we can learn better by heart or by discovering the solution to a problem ourselves, also depends on the style of learning we have experienced.

Basic patterns of perception

During the first months of our lives, the basic patterns of perception are developed, likings and dislikes for audio, visual, touch etc. are established. They influence our preference for learning by reading, hearing, seeing, feeling or experiencing what is new.

Learning success and good school results do not only depend on the absolute intelligence of a person (the ability to perceive, combine, memorize), but also on the compatibility of learning patterns. As students, we always have a partner – the teacher, a book, other students – and we are learning well when we recognize ourselves in the other, when our pattern is in accordance with the pattern of the partner. Therefore, the same content, regardless of its degree of difficulty, can be learned easily or with great effort. An example taken from a physics class will illustrate this.

The students are asked to learn the law “Pressure equals force divided by area”.

Listening

The first student attempts to assimilate the information by listening. Fundamental principles are explained in the course of discussion and misunderstandings are clarified.

Observing

The second student apprehends the law by observation and experiment. He/she observes how a sharp nail is driven into the wall more quickly than a blunt nail, because there is a minimum contact area of the point of the nail thus increasing the pressure.

Handling

A third student apprehends the law by means of handling and feeling. He/she takes hold of two pencils. First he/she presses one finger against the flat surface of the pencil, then a finger against the sharp tip of the other pencil. Here, he/she experiences pain, because the point noticeably increases the pressure as a result of its low surface area.

Reading

The fourth student apprehends the law by insight and reasoning; he/she reads about the abstract formula.

Had the subject matter only been explained in writing, the first three trainees would have had considerably more difficulties in learning the law. Today’s teaching still favors mostly one single learner type with a preference for verbal expression and abstract thinking. However, the number of students equals the number of different learner types. While it is obvious that a teacher cannot take account of each individual learner in a class over a long period of time, he/she should still try to give all of them an equal chance for learning. This means recognizing different needs of different students by making the link to the conditions pupils bring with them and by adapting the teaching to the various forms of learning.

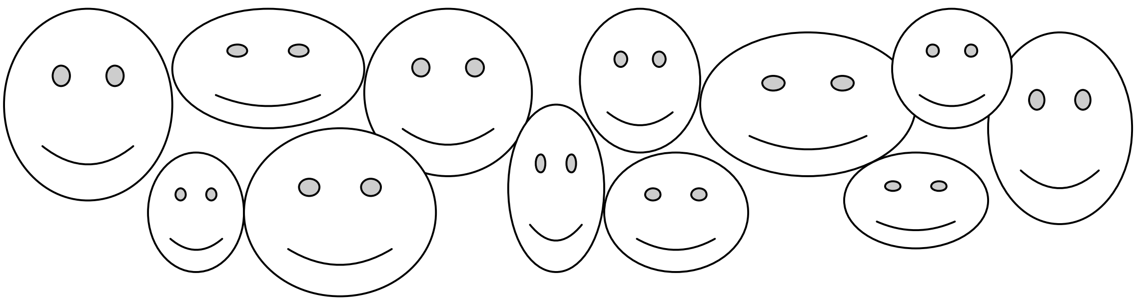

Even though we cannot cater for all the different learner types in our daily teaching, at least we should allow the development of these different types, such as the reading loner, the teacher-fixated contributor, the discussion loving talkative type, the curious listener, the competition-driven and the competition-frustrated – just to name a few out of many others.

It means to relate individually to the different students and to make use of different teaching methods in order to provide for as many students as possible.

For good learning results, it is also crucial to make students aware that they each favor a certain learning style. Students become more relaxed and can listen better to a lecture even if it is not their learning channel. Knowing how we learn best helps us to compensate for instructions that are not favoring our particular way of learning.

6. Creating multi-channel information

As we know, each learner favors a particular way of learning. This usually includes a preference for a certain input channel, like audio, visual or kinesthetic. The physic class was a good example when the same content – pressure equals force divided by area – was presented in different ways, thus facilitating learning for as many students as possible.

We also know that we remember new information better when it appears in more than just one particular context. To make learning successful, it is important to present new information in different ways using different input channels. The retention span of newly learned information is also related to the way we acquire it: the more senses are involved, the higher the learning result.

Acquiring information	Remembering information
By exploring & overcoming difficulties on your own	90 %
By exploring & phrasing on your own	80 %
By talking about it	60 %
By seeing and hearing	40 %
By seeing	30 %
By hearing	20 %
By reading	10 %

A lot of people complain they cannot remember new information or have a hard time learning something new. Usually, they hold their memory responsible for this. Though it is true that the memory is the most crucial factor for successful learning, it is most often not the one to be blamed for low learning results.

What we remember depends to a large extent on the way we prepare new information for storage – how we encode it will influence our ability to decode it later. The quality of our encoding determines the quality of our decoding. The difficulties we have with recalling something is not so much a problem of recalling itself but very often of the previous step: the encoding. To understand this better, let us have a closer look at our memory.

7. The human memory

As we said, learning means change of behavior due to experiences. Memory then equals the impact left by experiences. In other words: there is no proof of learning without any change in the memory. And, vice versa, a change in the memory indicates a learning process.

The role of attention is by no means less important. What we learn depends on our attention. Despite being exposed to numerous impressions and stimuli each day, we only remember a fraction of them: what we learn and remember is to a large extent a function of our attention.

At present we are still unable to completely understand how our memory functions. Therefore we are only looking at a model: It does not represent any physical structures. It is just a concept that helps us to understand the human memory and how it works better. According to this model, the human memory consists of three parts: the sensory memory, the short-term memory and the long-term memory.

The sensory memory is very limited in terms of quantity of information which it can make accessible to us and also in terms of duration: It is a phenomenon that only lasts for seconds. That means a very limited number of stimuli can be remembered or noted within a very short period of time, regardless of whether we pay them any attention or not.

For example, during a cocktail-party we can talk with someone without noting what is being said around us but as soon as our name is being mentioned, we suddenly listen. Or, we walk in the street being deeply in thought when a good friend of us passes by. We continue to walk and only two seconds later we stop and turn around because we have recognized our friend: the sensory memory then is like an echo – bringing back the information to us that we just saw someone we know. The sensory memory represents the fact that we can avail of a stimulus for some time after it occurred.

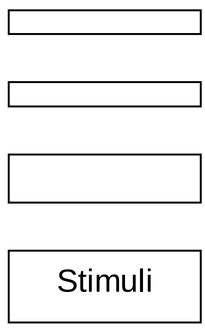

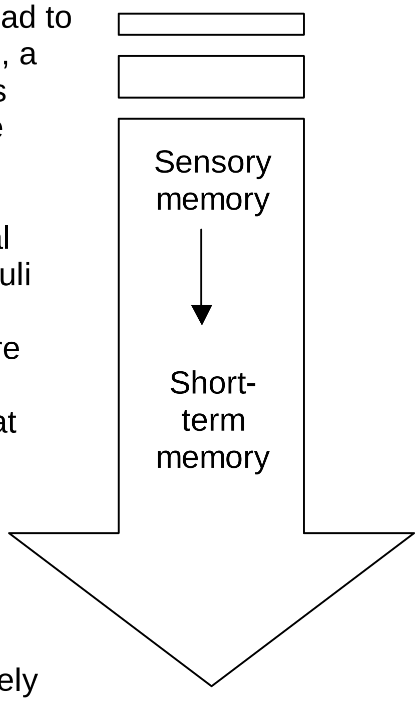

As short-lived as these stimuli or perceptions may be, they can lead to vital responses. We only have to think of driving a car: a car horn, a pedestrian in the center of the road, a red light. Here, perceptions often trigger off essential reactions, although they only stay in the memory for parts of a second, and then are forgotten.

Each day we are exposed to thousands and thousands of sensual impressions through the eye, the ear or the skin. All of these stimuli first enter the sensory memory where they leave a sensory mark. At the next stage they enter our short-term memory where they are associated with words and names. From the fact that we only remember a fraction of all these impressions we can conclude that there must be a filter:

If we are not attentive, these perceptions pass by like noise in the street or like the sound of a foreign language. They are regarded as uninteresting for storage. Thus, the sensory memory has the function of a filter or "door-keeper": it decides what to let pass and store and what to dismiss and delete. This is an extremely important function, because it protects us against over-loading with information.

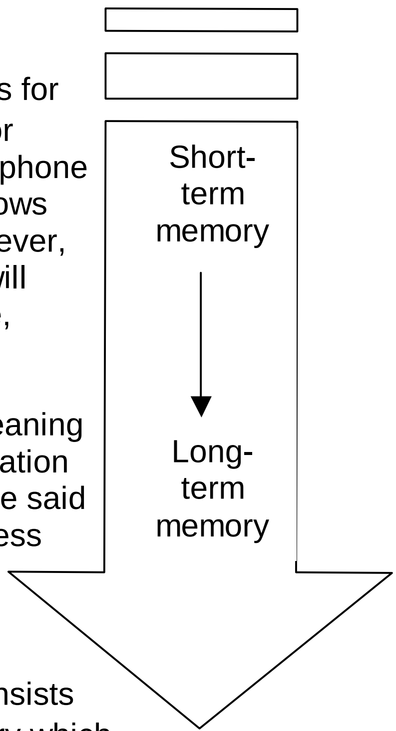

The short-term memory is a phenomenon that only lasts for about 20 seconds up to minutes. It can store about 7 items plus or minus 2. It allows us, for example, to look up a number in the telephone directory and dial up this number without looking at it again. It allows us to forget this number immediately after we have dialed it. However, should the line be busy and we have to dial it again, we usually will have to look it up a second time. To remember it for a longer time, we have to repeat it constantly.

The short-term memory is an active, ongoing process. It gives meaning to the information that is perceived. However, it stores this information only for a short time unless it is being repeated. Basically it can be said that it comprises everything that is within our attention or awareness at a given moment. As such, it can also be called the actual consciousness.

The long-term memory comprises everything else. It consists of encoded, consolidated information out of the short-term memory which then is equated with concepts and meaning. Not only does it store information over a much longer period of time than the short-term memory, it also is much more passive as opposed to the active ongoing process of the short-term memory. It is also much less susceptible to interferences and its capacity is much higher. While it is easy to call upon information in the short-term memory, it can take much longer to retrieve information from the long-term memory.

Previous models thought of the long-term memory as a continuous recording of all our experiences, not unlike a videotape. Recent research has developed different models: they are all of an associative nature. Basically this means that all information is linked with each other and forms knots like in a big web. For example, when we search for a certain item in our memory, we don't just simply produce a long chain of answers and see whether they fit the question or not, we try to limit the area in which the information can be found by linking it with other information. In the example below, “My blue pen” is linked to various other bits of information or knots which themselves are linked to many more knots, which are not displayed in this illustration.

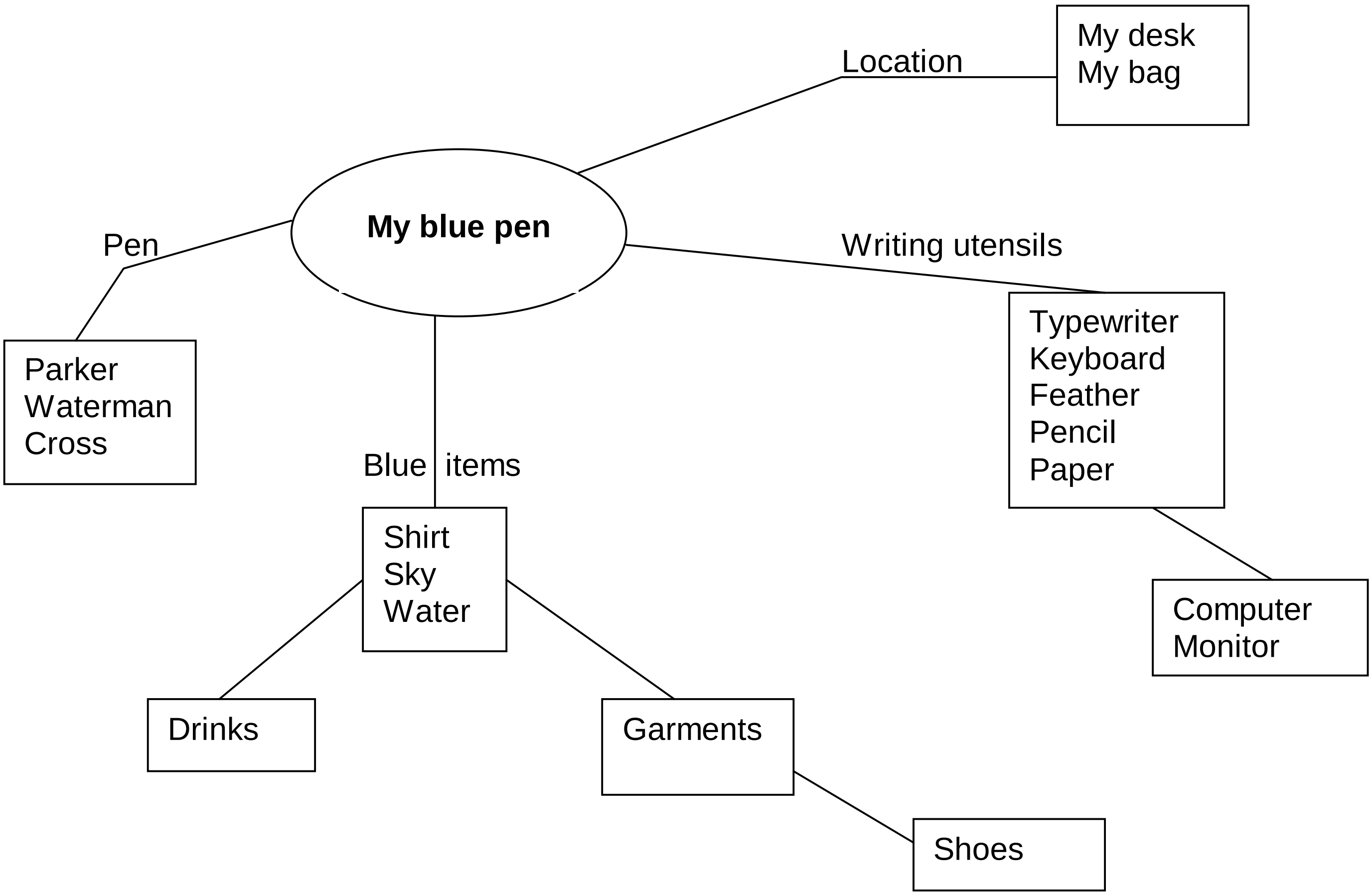

As we already said, we remember new material better when we incorporate it into already existing information: It reflects the way our memory is structured. With regard to learning strategies, memorizing alone is not very helpful. Synapses are only strengthened mechanically, so to speak, without giving this new information any particular meaning. New synapses are mainly being established when new information is being applied. Affections reinforce this process. For example, newly learned English words used when talking to a girl- or boyfriend will migrate much easier to the long-term-memory since there is a link between these words and a strong emotion such as love. Also, remarkable material is remembered much easier and longer than insignificant material as well as outstanding, important or very emotional events: we can recall them more clearly and longer than other events.

8. The left & the right brain

Traditional teaching and training favors a certain learner type with a preference for verbal expression and abstract thinking. This involves usually activities such as thinking in words, talking, writing, reading, calculating, analyzing, which corresponds with abilities of our human brain such as speech, ordering, sequencing, intellectual analysis etc. However, that only makes up half of our abilities.

From modern brain research we know that our brain is divided into two parts, the left and the right brain or the left and right hemisphere. They each are identified with different abilities:

Left — **L**ogic brain	**R**ight — c**R**eativ brain
Speech	Creativity (new combinations)
Calculations	Artistic activity
Intellectual Analysis	Musical ability/Rhythm
Reading	Emotions
Writing	Recognition
Naming	Comprehension
Ordering	Perception of abstract patterns
Sequencing	Spatial abilities
Complex motor sequences	Facial expressions
Critique	Holistic ability
Evaluation	Intuition
Logic	Images
	Color

As we can see, traditional teaching and training highly favors the left side of the brain. Learning results are much higher, though, when both sides of the brain are stimulated and involved in the learning process: analytical exercises should be combined with creative, expressive activities. When the less used side is encouraged to cooperate with the stronger side, we usually get a synergy effect meaning 1 + 1 = 5 (instead of 1 + 1 = 2). The ability to see relationships and patterns, and make unfamiliar combinations and connections, is the core of creativity. To ignore these abilities and not involve the right side of our brain in the learning process means to limit ourselves unnecessarily and to neglect our full potential. As we already know we learn best whenever we can link the learning material with corresponding images, drawings, associations, and emotionally touching impressions. It should be a prerequisite for all teachers and trainers to equally involve both sides of the brain of their students during instruction in order to achieve better learning results.

9. Stimulating learning

Thinking requires a lot of energy. To keep our brain active, we use up 18% of our daily input of calories, infants even use up almost 50%. Therefore, before each learning operation the brain asks unconsciously: Is it really worth the effort? The neuronal network of a student needs to be convinced again and again that learning is worthwhile. This cost-benefit-analysis is influenced by prior experiences: If new information can be linked to an existing point of interest, attention increases and the desire for more information develops. Generally speaking, the brain wants to be enticed.

Of course, students have certain preferences, some of which are genetically influenced. Those with an inclination for mathematics will have no trouble learning how to execute mathematical operations. On the other hand, those with a strong aversion against languages will find it very hard learning them. For teachers the latter group of students poses the big problem: How can they be motivated to learn? How can they achieve at least a minimum result?

To equip students with the right learning strategies is one answer to this question. When we are aware of how we learn best we will have far less problems in achieving at least minimum results. How we find out about the individual learner types, how we can plan and organize our learning efforts, and further important details with regard to learning strategies will be the focus of the next unit.

The more associations are touched by a new information, the greater the chance that attention is aroused. If there are no associations that signal points of interest, new information just passes by without getting any attention. Worse, new information can even frighten our students: it is a normal reaction embedded in our genes to be careful when confronted with the unknown or unfamiliar. Our hormones signal “danger” and they prepare our body for running away. In the learning context this means there is a blockade; we are unable to grasp anything. Instead, we build up a strong aversion or resistance, thus preventing any learning at all.
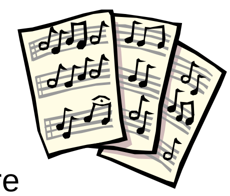
To overcome this blockade, we can make use of the so-called secondary associations, which are related to the environment in which the learning takes place. Secondary associations can be music we listen to while learning something, a particular method like group work or any other feature to which the learning material is tied. If these secondary associations are positive, it is much easier to recall the information linked to them.

The advantage for learning means that we can package new information in familiar ways, which recall positive feelings. This helps to reduce the fear and stress when confronted with unknown material. We recognize something familiar which in itself is already an achievement and therefore a stimulant for learning. In that context, curiosity is a crucial factor for overcoming this fear; it is a strong motivator for learning new material. Whatever is associated with fun, pleasure and delight, is learned and remembered much easier.

As teachers and trainers, it is our task to motivate students. Motivating means creating an atmosphere conducive for learning: it means to stimulate curiosity, to identify points of interest, to mobilize positive affections and, of course, to present the learning material in a way that recognizes the findings of modern brain research relevant for learning.

10. Consequences for teaching

In teaching and training, the following rules should be considered:

Knowing the learning objectives

The student always needs to be aware of the value and meaning of the learning material. Only then attention and the urge to learn are aroused, and the content is stored sensibly.

Sensible curriculum

When the practical use of learning material cannot be concluded from prior learning units or its relation to reality, it is stored badly in the memory. Hence, it is also useless for later use since it is stored in an isolated way without any linkages. Sequence and structure of a topic have to take the process of understanding into account rather than any specific subject concerns.

Mobilizing affections

When curiosity, fascination, enthusiasm etc. are lacking, the readiness to learn is not aroused. On the other hand, whatever is linked to affections is remembered more clearly and longer, since affections reinforce the input and allow for cognitive and affective perception. Curiosity in particular is a great stimulant for learning and can also help to overcome the fear of the unknown. Presenting new material in a familiar way also helps to reduce this fear and bypass related learning blockades.

Creating associations

Examples and pictorial additional explanations furnish new information with further points of reference for storage in the brain. Graphic description guarantees better transition from the short- to the long-term memory and offers varied possibilities for recalling the information later. The more associations we have when exposed to new information, the higher the possibility of remembering. Associations help to store details and they also arouse attention and interest.

Creating multi-channel messages

The more senses are involved in learning, the higher the retention span. Different input channels offer different possibilities for associations for deeper understanding. This enhances attention and the motivation to learn. It is also easier to remember the new information later. Multi-channel messages also recognize the fact of different learner types with various preferences.

Applying didactical principles:

From the whole to the detail

The whole usually offers linkages to the day-to-day experiences, something familiar. This allows for incorporating new information on different levels. With many points of reference available, also details can be remembered better.

From the known to the unknown

Explaining facts or connections helps to recall known association patterns. To link a new term to known information is much easier than first learning a new term without any point of reference.

From the concrete to the abstract

Whenever a principle, law, proceedings or any other abstract material has to be learned, it is much easier when described as real action. It can be visualized and conclusions can be drawn accordingly to help understand the abstract résumé.

From the simple to the complicated

Complex and complicated processes can be simplified: it is important to show the essentials so that the most important - the basic principle, for example - is understood. This also creates an interest for the details and the more complex matters of a topic.

Deutscher Entwicklungsdienst

Linking teaching to reality

Establishing links to real life enhances curiosity and interest and offers more points of reference for storing new information. In the same way, exposure to reality and direct observation of the real object facilitates spatial orientation and allows easier and more accurate understanding. Putting students actively to the test outside of school in a real life situation where they can make use of what they learned usually has a great motivating effect on their performance.

Repeating new information

Each learning material needs to be repeated at intervals. It enhances remembering since the learning material appears in a different context and different connections, which once again allows for more associations and linking points. Application – using what has been learned – is the best way of repeating and reviewing.

Involving students actively

Avoid ready-made solutions. Allow students to come up with own solutions for problems and to work independently with media as well as to conduct experiments during natural science classes. Give challenging, suitable tasks already at an early age to foster a positive attitude towards learning.

Making learning enjoyable

Fun and a sense of achievement create an atmosphere conducive for learning. Information linked with positive events and feelings are learned and remembered much easier. Create opportunities for achievement and give praise and recognition as often as possible. Correct mistakes casually; if they are emphasized too much, the contrary may happen and students will just store and recall the wrong information.

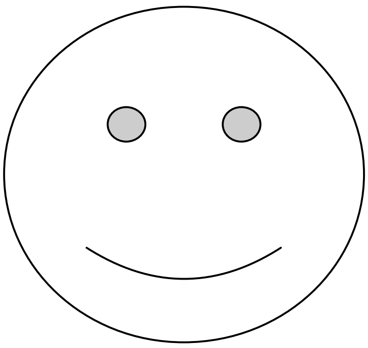

Unit 4 Conclusions

1. Learning methodology and the world of employment

As we have seen in the previous units, learning is quite a complex process. While some factors simply have to be recognized, such as the brain's structure in form of the neuronal network, others can be influenced and changed, like learning strategies.

The more we know about learning in general and about our individual learning profile in particular, the better we can organize our learning efforts in order to achieve good learning results. Hence, it is quite obvious that students and trainees will benefit tremendously when they are equipped with learning methodology and knowledge about learning as such.

These benefits, however, are not limited to the time of study and training. The rapid spread of new technologies and the changes in work organization and process sequences in production are dramatically influencing the profile of work. Today's and future graduates from schools and training centers are not only required to have expertise in a particular professional area, they are also expected to have so-called key qualifications or core skills. While workers are still asked to carry out orders, they also have to be able to handle unforeseeable situations: They must identify problems and find the optimum solution. This requires both social and methodological skills. Some of these core skills with examples of essential individual qualifications are:

1. Organizing and carrying out the assignment

- Determination
- Accuracy
- Systematic course of action
- Organizational ability
- Coordinative ability

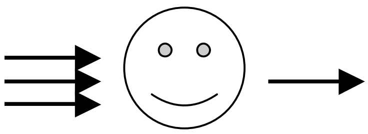

2. Communication and cooperation

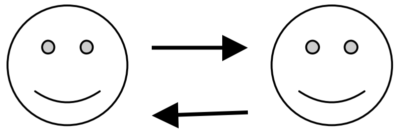

- Open-mindedness
- Ability to cooperate
- Ability to work in teams
- Appropriate behavior towards customers
- Appropriate behavior towards colleagues
- Intuition

3. Application of learning techniques

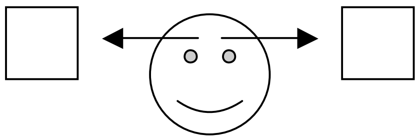

- Using learning techniques
- Deductive thinking
- Ability to transfer methods to other areas
- Thinking in systems

4. Independence and responsibility

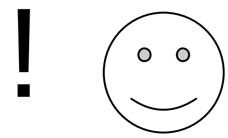

- Involvement
- Reliability
- Acting prudently
- Ability to criticize oneself
- Ability to express own opinion

5. Ability to work under stress

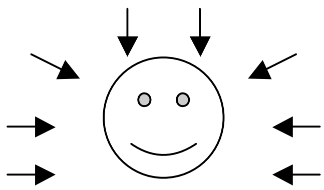

- Ability to concentrate
- Perseverance
- Adaptability

For teaching and training this means to equip students and trainees not only with the professional expertise, but also with methodological and social skills. Introducing learning methodology in the curriculum is one major step to prepare graduates for the demands and challenges of the work of employment: It helps them to deal with the constant changes due to new technologies and to upgrade knowledge faster and easier.

2. *The importance of group work*

As mentioned already, the world of employment has undergone tremendous changes with regard to organizing work and production processes. To a large extent, modern manufacturing technology is based on teamwork: Single working steps are united into working procedures and executed by teams. The whole team is responsible for the way they organize work and for the result in terms of quality and quantity.

The ability to work in a team is also required in other work areas. When it comes to research and problem solving, solutions are no longer found by individuals but by whole teams: people with different expertise have to work hand in hand to come up with the optimum solution for a particular problem. Instead of working isolated (one brain), different ideas are put together (many brains), discussed etc. to find the best possible option.

Working together as a team, however, also has to be learned. In daily teaching and training, assignments should therefore be given not only to individuals but also to groups. While teamwork is beneficial for the demands of future work and employment, it also has a favorable effect on learning as such:

Associations

When trying to understand the learning material, it provides more associations, which help to link the new information and remember it better; mixed learning styles also ensure better learning and make it more enjoyable.

Explanations

Difficulties of understanding can be revealed and clarified in discussion; in addition, different opinions and viewpoints can be gained.

Assistance

In cases of uncertainty, it is possible to find assistance and support in another person in the same position; it also saves time since tasks are divided among group members.

Activation

There is a greater challenge to the activity of the individual in a group than in learning on one’s own; participating and contributing increase the learning commitment.

Check of performance

By comparison with others, one's own performance can be assessed more realistically; this can lead to new or additional incentives to learn, thus raising the quality of the work.

Depending on the task the groups are given, there are two major types of group work: the common job group work and the job sharing group work.

Common job group work

means that all groups are intensively working on the solution of the same problem: all groups are given the same task, materials and questions. At the end, each group is asked to present its results. This embodies a repetition, which means reinforcement. The other positive side effect is that the output is higher – more groups mean more ideas, solutions, and contributions. There is also the element of competition and self-critique – which group has the best solution, what are other solutions lacking. At the end of the common job group work, every student and trainee should be familiar with the new knowledge without additional homework.

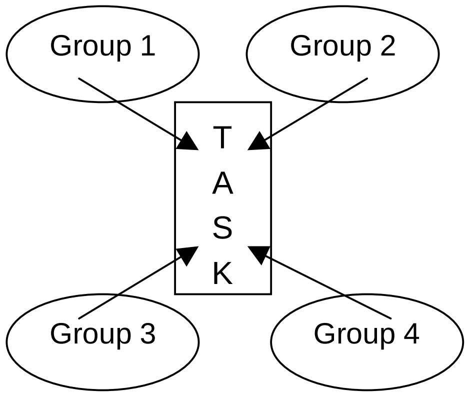

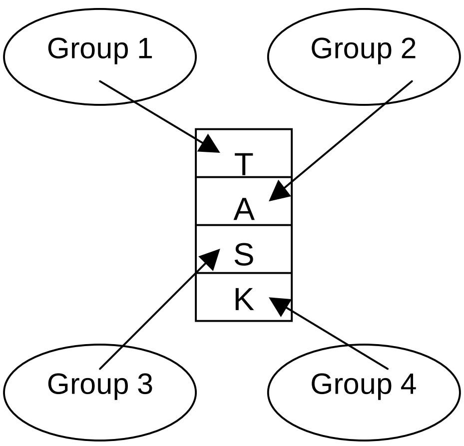

Job sharing group work

means that every group is working on a particular part of a solution. At the end every group presents the results; these partial contributions are assembled and put together into a final complete result like pieces of a puzzle to a picture. Though this form of group work saves time, learning is not as intensive, since there is no repetition and the results of other groups are usually presented in lecture form without any active involvement of the other students and trainees. In addition, the output tends to be lower because fewer people work on a particular task.

The ability to efficiently work in a team requires a number of social skills such as:

- Fair sharing of work load
- Finding a compromise among different views
- Using convincing technical arguments
- Dealing with criticism
- Accepting the superiority of other teams' results in a fair appreciation

These abilities cannot be trained in conventional ways. They have to be experienced and practiced. Measuring progress in that field is based on observation over longer periods.

As for assessing results of group work, these criteria can be helpful:

- Correctness of matter presented (knowledge)
- How well explained (communication)
- Format of presentation (creativity)
- Team work (social)

As already mentioned earlier, group work is also a good learning strategy: Instead of learning alone, we can form a learning group. The ideal group consists of 2 to 6 people. Among these a kind of working contract is established to define the common objective and goal. The learning then is divided into parts and assigned to group members; the group works together until the plan is completed. While individual strengths can be used, especially with regard to different learning styles, group members can support each other also in other ways by sharing opinions, experiences, knowledge and fears. The learning group is also a good audience to present results to; the feedback helps to tell how well a subject is understood. At the end, learning groups should review how they worked together, so they can improve when tackling future learning projects.

3. Learning – a broadened concept

For many years the focus of teaching and training has been the content level of a particular subject. In its approach this style of instruction is concentrated on imparting knowledge (facts, rules, terms, definitions etc.), facilitating comprehension (phenomena, arguments, explanation etc.), creating understanding (connections, systems, processes etc.) and enabling evaluation (judgment of theories, statements, measures etc.).

While this is still of major importance, other areas of learning, such as learning methodology, social skills and affective learning become the focus of attention: As mentioned earlier, information is outdated much faster than it used to be. Consequently, employers ask for employees who are able to handle information and constantly upgrade their knowledge – in short, employees who have learned how to learn. At the same time, the organization of work processes asks for staff used to work in teams and capable to take on responsibility.

These new requirements should, of course, be reflected in the curricula of schools and training centers. If taken seriously, they will lead to a new approach in instruction based on a broadened concept of learning.

Broadened concept of learning			
Content-subject related learning	**Methodological-strategic learning**	**Social-communicative learning**	**Affective learning**
• Knowledge (facts, rules, terms, definitions…) • Comprehension (phenomena, arguments, explanations…) • Understanding (connections, systems…) • Evaluation (judging theories, statements, measures) etc.	• Excerpting • Looking up • Structuring • Organizing • Planning • Deciding • Designing • Keeping order • Visualizing etc.	• Listening • Explaining • Arguing • Asking • Discussing • Cooperating • Integrating • Facilitating discussions • Presenting etc.	• Developing self-confidence • Enjoying a topic/ a method • Developing identification and commitment • Building up values etc.

Unit 3 Handling Information

1. General considerations

One of the core requirements for successful learning is the ability to handle information. As recipients of information in the context of teaching and training, students and trainees are daily confronted not only with inputs in form of lectures, presentations, experiments etc., but also with printed material such as textbooks, articles from newspapers and magazines, internet printouts and the like. All these inputs have to be understood, analyzed, sorted and processed in a way that they can easily be stored and recalled later.

At the same time, students and trainees also have to present information: They can be asked to give a lecture, to inform about the results of group work, to submit a report etc. Oral and written exams also require them to give inputs; the results of these tests indicate how successful they were in handling information.

While of major importance for the time of study and training, the ability to handle information is also vital for the working world: not only is information outdated faster and faster these days, the amount of new information is also constantly increasing.

This unit focuses on the main methodological skills required for handling information in the context of teaching and training. While basic information is given on the areas covered, exercising these respective skills is a necessity for long-term success.

2. Reading techniques

Efficient reading is a crucial step for successful learning. Apart from mere reading skills it involves the ability to stay concentrated to the task and topic, to grasp the content, to filter out the important information and to process it in a way it can be used and/or recalled later. Depending on the amount of information involved, it is also quite time-consuming.

To make maximum use of time, it can be useful to just skim through a text instead of reading it thoroughly. For example, when we want to get a first impression or obtain certain key information of a text, survey reading is a helpful method. The common word-by-word reading approach is not only tiresome and ineffective in that context; it is also very often a waste of time since only very selective text utilization is required. The following criteria help us to decide when survey reading should be practiced:

Why skimming through a text?

Skimming through a text (survey reading) is useful and makes sense when…

1 the topic of a text is not totally unknown to us

2 we are looking for specific information in a text answering given or self-constructed questions

3 we deal with a longer text of which only a certain part is important for us

4 we want to get a first impression of a text before reading it in detail

5 we are already knowledgeable about a topic and we only like to verify whether a text contains any new information for us

6 we quickly want to know whether a text contains any interesting or important information for us

Rules for survey reading

In survey reading it is important…

➡ That we remain concentrated so we don't have to read a previous paragraph again since these deviations prevent reading success and reduce reading pleasure

➡ That we search for something particular during reading: for terms, numbers, explanations and other information we consider important

➡ That we do not focus our eye on single words but on whole word clusters. This extension of the view span can be practiced and learned.

➡ That we concentrate on items with special emphasis such as headlines, words in bold print and summaries at the end

- That we don't take every single word serious and try to remember it since our memory could not keep up with this demand. We have to be selective. Focusing on the essential is a must!
- That we identify the crucial words representing the meaning and the mental structure of the author, working from top to bottom
- That we, if required, jump from paragraph to paragraph to get an overview and to judge whether there is anything important for us

When conducting exercises in survey reading, a time limit should be given according to the level of the reading ability of a respective class/group. Important is that the work is done under real time pressure. With the help of the word pyramid below we can exercise to enlarge the view span, thus increasing reading speed: we take a sheet of paper or cardboard and cut out a window at the top as high and broad as the last line of the pyramid. Then we cover the pyramid with the paper and start pulling it slowly downwards, thus revealing one line after the other. We make a note of the word/sentence we see or any questions we may have.

Enlarging the view span

Test

Success

Text marker

Concentration

Reading pleasure

Overhead projector

Marking and underlining

Preparing for exams and tests

Fast reading has to be practiced

Instruction can be fun and enjoyable

The reading speed is constantly increasing

Headlines and subtitles usually stick out in text

With ongoing practice, the view span is increasing

This reading exercise and training has been a success

Focusing on the important and essential is surely a must

The best way to practice is with a partner who pulls the sheet for us and controls our answers of what we have seen. Other pyramids can be made for further practice. This helps to improve reading speed by enlarging the view span.

Reading speed and survey reading are both used in the 5-step reading method: This method is a systematic approach for reading. While it may not be needed all the time, it should be explained and practiced often enough since it improves reading results considerably. Else, students and trainees may just spend a lot of time reading without arriving at useful results.

The 5-step reading method

1 Skimming through information
At that stage, we look out for headlines, bold printed matter and other emphasized items, the beginnings of paragraphs or, in case of books, at the table of content. During the first step we want to obtain a rough idea of the content and the composition of the text.

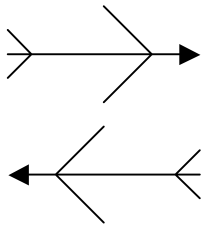

2 Forming questions
Now we try to find out which questions are tackled in this text. For which questions does the text provide us with answers? In the beginning, we write down these questions; later on, these questions can be clarified mentally.

?

3 Reading thoroughly
Next we read the text thoroughly while keeping our questions in mind and the reason for reading – what do we want to know? During reading we make brief “just-a-second pauses” so what we have read can settle.

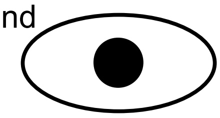

4 Summarizing
After each basic idea we stop and reflect on what we read and whether we understood everything. We summarize the reading content in own words – in written form or mentally. For this step, loud talking to one self can be very useful.

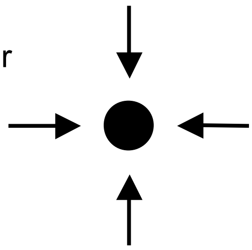

5 Repeating
At the end we repeat the major statements and information of the text. We consider our questions we formulated during step 2 and our markings of the text we may have done during reading. The repetition can be executed in writing, mentally or as a monologue.

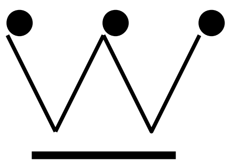

3. Summarizing techniques

Evaluating a text and summarizing the information in short statements, charts, sketches or other graphic drawings is a major skill in handling information. A first step can be marking and underlining. If executed in the right manner, it helps us to recall the important information of a text.

In that context, a text marker is a very useful tool since it makes important parts of a text catching one's eye. When reading the same text for repetition purposes later, it is usually enough to concentrate on the marked parts: they bring back all the other important information of the text. In a way, the marked parts have the function of a key: they open up areas of our memory in which we have stored the connected information. For example, when marking the word "high pressure", this word helps us to retrieve other information that we have associated with it when reading the text for the first time. (What happens when we have high pressure as a weather condition? How does it occur? In what way does it affect people's health? Etc.) We hardly have to read this sideline information again since it reappears with the respective key word.

However, this requires that we use the text marker only for the key words. If we mark whole sentences or even paragraphs, the eye does not know on which part to focus. When marking too much, our memory fades and for repetition purposes we have to read the whole text again. This is time consuming and also boring. Therefore, we should only mark key words and make sparing use of text markers, so our eye immediately catches the key words which trigger off our memory. We should also stick to one marker color; various colors may lead to confusion. Important sideline information can be marked with a fine red felt pen: Red as a signal color can easily be recognized and the fine line distinguished from the bold marked parts.

Rules for marking

1 We keep a pencil, ruler, marker and fine red felt pen ready for use on our desk

2 We skim through the text to get a first impression

3 We underline important parts with pencil to recognize the text structure. Pencil can be easily erased, so it is no problem if too much is underlined at this stage

4 We skim through the underlined parts to identify the key words, which, after careful consideration, we finally mark. Yellow has proven to be a good color.

5 We underline sideline information with a fine red felt pen. We are careful not to underline too much.

6 We write down the key words on a separate sheet to check whether we have understood everything.

7 When we remember the important sideline information at this point, we know we have chosen the right key words.

8 We will finally see that we can remember easily the key words, which will help us to recall most of the other information. The details are linked to the key words! And, after all, we cannot remember everything.

As said already, information can also be summarized in charts, sketches or other graphic drawings. Most of us remember information much better once it is associated with images. The crucial factor in that context is that we develop our own individual summaries and structures, which we then translate into graphics. While students and trainees may have difficulties structuring a text, their learning results will improve when they get sufficient assistance and practice in these techniques.

Here are two examples how information can be translated into graphic structures:

Example 1:

A text about the problems heavy traffic causes in a city like Manila

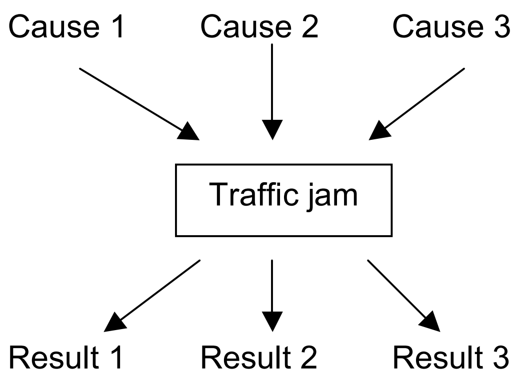

This visual aid is not only useful for processing information, it can also be useful when delivering a short speech on the topic: While it ensures that all important inputs are mentioned, it allows for free phrasing which makes any speech always far more attractive than just reading a pre-written text.

Example 2:

A text about the structure of a company

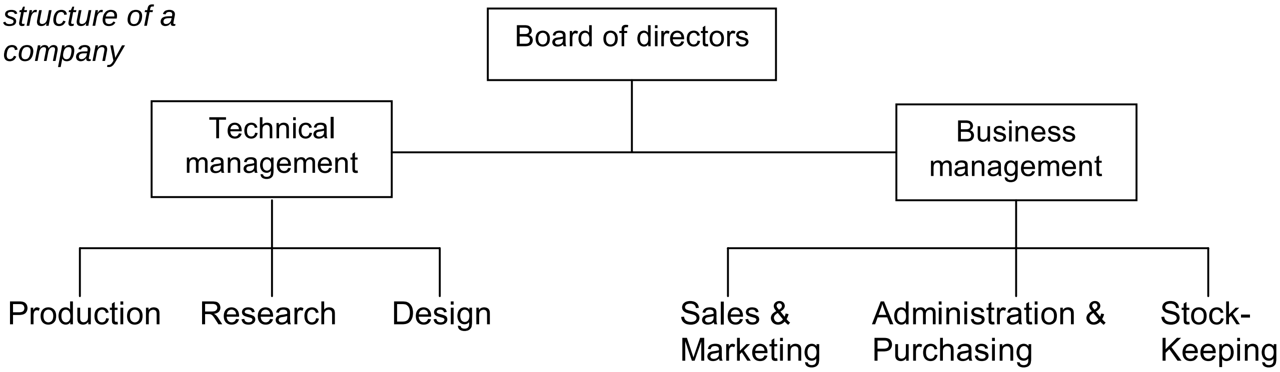

This visual aid not only helps to structure and understand information given purely in words, it also enhances remembering this data.

4. Researching techniques

So far, we looked at handling information on condition that it is already available. However, handling information can require to research for it: a particular problem has to be solved, an answer to be found for a question, material for a presentation to be put together. To obtain or verify information, we can make use of libraries, the Internet or special resource persons who are experts in their field. The requirement here is that we know how and where to look for what particular information.

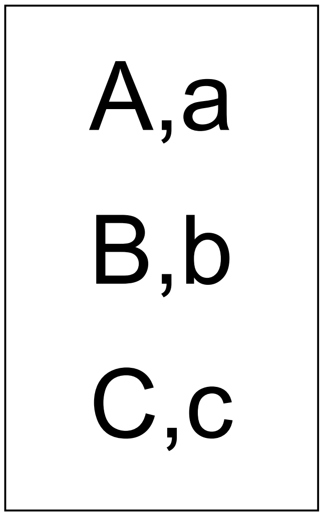

With regard to reference books such as dictionaries, subject catalogues or encyclopedias, it entails dealing with content tables and catchwords, managing the alphabet, quick leafing through books to get a first impression, fast skimming through a text and recognizing the wanted terms of information.

Once again, exercising how to work with reference books is crucial for success. Competing games with material such as an atlas, various specialized dictionaries, telephone directories etc. combined with crossword puzzles, sorting and spell check exercises can be very helpful. Like in survey reading, a tight time limit should be set to stimulate quick and speedy looking up.

Whenever a library is at hand, a visit should be made to ensure students and trainees know how to avail of the respective books. As for the Internet, they should be familiarized with the basic research strategies when using search engines. What holds true in general, holds particularly true for the Internet: the more specific the question (meaning the term for the search request), the more specific the answer. In the age of information we usually do not suffer of lack of information, we are rather confronted with too much information!

When we are conducting research, we usually try to find an answer to a given topic and/or problem. Here, the art of questioning can be very helpful. In general, those who ask questions usually benefit more from learning. Questions are like focal points in our memory to which the answers are glued. This tie between question and answer, however, requires that we ask goal-oriented and well thought-out questions. Although all of us started life with an insatiable curiosity, most of us learned that answers are more important than questions. Hence, the art of questioning is usually underdeveloped. A varied questioning training helps us to develop topic-centered questions, to relate questions to particular areas and to establish question-answer connections. Thus we not only further our ability to ask, but also to understand and answer questions.

The ability to ask questions not only helps us in research, it can also enhance our problem-solving skills. For most of us this will require shifting the initial emphasis away from focusing on “the right answer” and toward asking, “Is this the right question?” and “What are different ways of looking at this problem?” Successful problem solving often requires replacing or reframing the initial question. Questions can be framed in a wide variety of ways, and the framing will dramatically influence our ability to find solutions.

Questions can be grouped according to three major areas:

Knowledge	**Comprehension**			**Values**
	Causes	Results	Countermeasures	
Asking for: Terms Numbers Names Details to be memorized	Lead further into topic and require thinking, combining and arguing			Concern personal opinions and values

Who?
What?
Where?
When?
Why?
How?

How can we sharpen our question-asking skills so that solutions will start to come to us? We can begin by asking simple, “naïve” questions children might ask, such as, “Why the hammer blow causes the nail to jump?”, “Why is the sky blue?”. Aiming to ask questions we have not raised before is a way to stimulate our curiosity, which again stimulates learning. Creating questions is also a good start to research on a particular topic. Here is one example focusing on the image of a bird in flight:

How does a bird fly?

- Why does it have two wings?
- Why does it have feathers?
- How does it take off?
- How does it slow down?
- How does it accelerate?
- How high can it fly?
- When does it sleep?
- How good is its eyesight?
- What does it eat?

Other topics for creating questions could focus on images such as flowing water, the human body, a landscape, reflected light, a knot or braid.

When we want to obtain and/or verify information by conducting an interview with a resource person, we also need well thought-out, goal-oriented questions. Only when we are aware of what we want to know can we ask the kind of questions that prompt the answers we are looking for. What stimulates our own mind, can also stimulate the mind of our resource person: Asking surprising, unexpected questions can lead to interesting, unique insights and may also help to reveal the personality of our interview partner!

5. *Working tools*

Once we have compiled the information we need, the next step in handling information usually includes processing and/or storing it. For that matter, we have a number of useful tools, which help us to keep order in terms of filing and presenting information. Exercises on how to use these learning aids help us to be aware of their purpose and correct use. Once familiarized with these items, competitions among students can be held who comes up with the most creative learning poster.

Correcting mistakes:
- Eraser
- Correction fluid
- Correction tape
- Plain stickers

Writing utensils:
- Pencil
- Fountain pen
- Felt pen
- Ballpoint pen
- Marker
- Text marker
- Crayon

Storing notes
- Card-index box
- Index card
- Alphabetical index card

Cutting & Sticking
- Scissors
- Cutting knife
- Puncher
- Sharpener
- Glue stick
- Fluid glue
- Scotch tape
- Masking tape

Fastening papers
- Paperclip
- Stapler
- Fastener
- Binder

Designing
- Ruler
- Dividers
- Set square
- Protractor
- Lettering guide
- Curve stencil
- Drawing board

Design elements
- Symbols
- Stickers
- Frames
- Backdrops
- Ready-made letters

Filing papers
- Filing tray
- Clear sheet protector
- Folder
- File
- Index sheet
- Divider

While basic skills such as precise cutting out of shapes and figures, tidy gluing, accurate drawing of lines etc. are usually learned at an early stage, proper execution should be monitored and, if necessary, reinforced through exercises. Often the state of students' exercise and notebooks leaves a lot to be desired, an indicator that they are not aware of the importance of good visual presentation of learning material in achieving high learning results: It is much easier to learn material that is well structured and presented than confusing, unsystematic material hardly legible. The following page displays a variety of samples that can be used in design and layout.

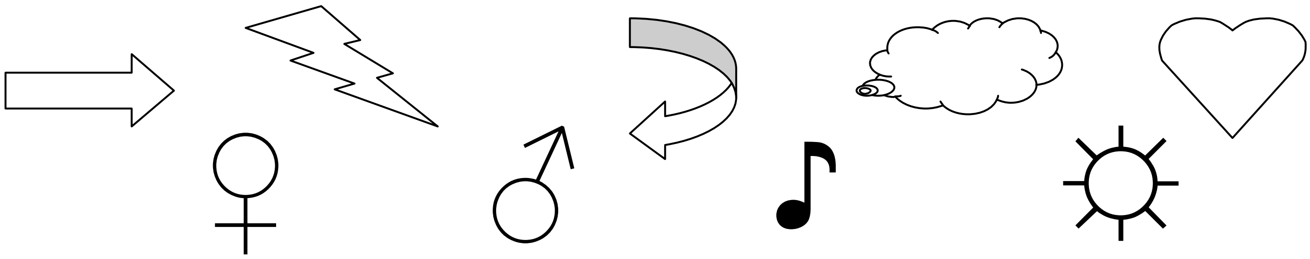

Examples of symbols and design elements

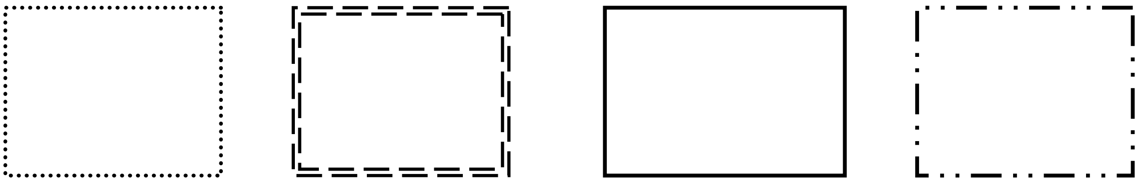

Examples of border designs

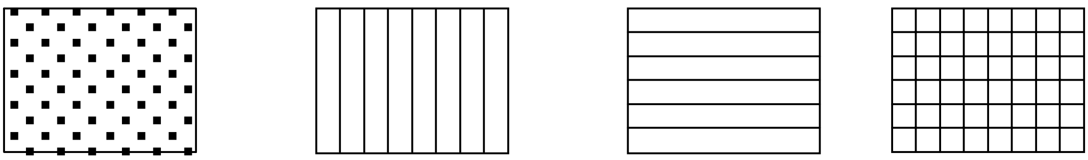

Examples of marking areas

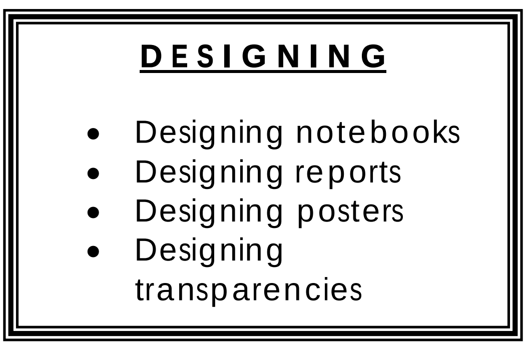

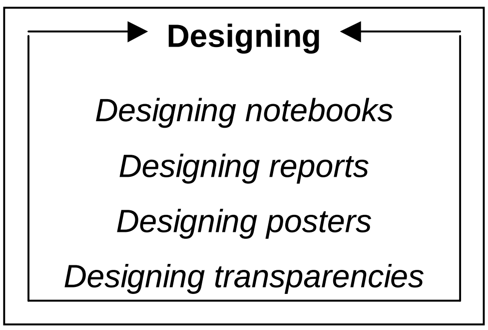

Examples for layout & design

The next set of examples shows how the same information can be presented in different ways: While example 1 and 2 only differ with regard to the lay out, example 3 is also shortened and reduced to the essential information.

Example 1

THE USE OF SCAFFOLDS
Definition: A scaffold is a framework of metal or wooden/bamboo poles and planks used as a temporary platform from which building repair or construction is carried out. Dependent scaffolds are usually fixed on a house or a wall and cannot stand freely while there are poles only on one side of the scaffold while the other side is connected with the building, which gives it a proper stability. Independent scaffolds do not require the support of any wall or building because of having poles on both sides, which allow erecting them in-dependently. Scaffolds can carry workers and material but one must be careful not to put too much load like blocks and mortar so that the planks cannot carry the load and will break down.

Example 2

The Use of Scaffolds

<u>Definition:</u>
A scaffold is a framework of metal or bamboo/wooden poles and planks used as a temporary platform from which building repair or construction is carried out.

<u>Dependent scaffolds</u> are usually fixed on a house or a wall and cannot stand freely while there are poles only on one side of the scaffold while the other side is connected with the building, which gives it a proper stability.

<u>Independent scaffolds</u> do not require the support of any wall or building because of having poles on both sides, which allow erecting them independently.

Scaffolds can carry workers and material but one must be careful not to put too much load like blocks and mortar so that the planks cannot carry the load and will break down.

Example 3

The Use of Scaffolds

Scaffolds are put up when work has to be done above men's height.
They carry persons and construction material.

Types of scaffolds

<u>Dependent Scaffold</u> | <u>Independent Scaffold</u>

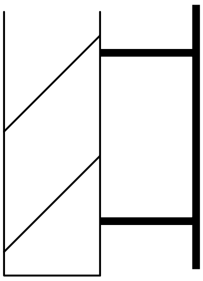

Are fixed onto the building and cannot stand alone.

Are more stable but cannot be erected freely.

Can be erected without connecting it to a building.

Can be erected everywhere but are not as stable.

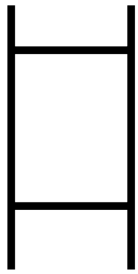

<u>Do not overload scaffolds! Be careful when working on them!</u>

6. *Visualizing techniques*

Good visualization not only enhances understanding, it also helps to remember new information. The various degrees of improvement can easily be seen in the examples above: While number 1 just gives a 1:1 information, number 2 already structures it by simply introducing paragraphs and underlining the key words. Number 3 goes a step further by incorporating illustrations and reducing the information to the most important parts.

While it is important that teachers and trainers make use of visual aids during instruction, it can be of great benefit for students and trainees to be actively involved in the visualization process themselves: Instead of presenting them with the finished product, they can be asked to "translate" text, figures and statistics into meaningful charts and tables on their own. The more they practice this skill, the more they can apply it when learning by themselves, e.g. when summarizing information. At the same time, this kind of constructive thinking also improves their understanding capability when asked to interpret charts and tables.

Charts can be used for different purposes. The main are:

Column chart

Comparison of various sizes

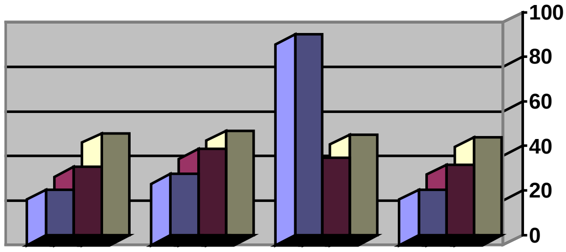

Pie chart

The whole and its parts

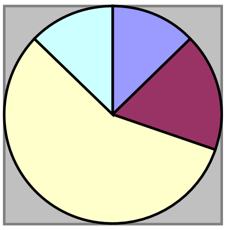

Curve chart

Visualizing developments

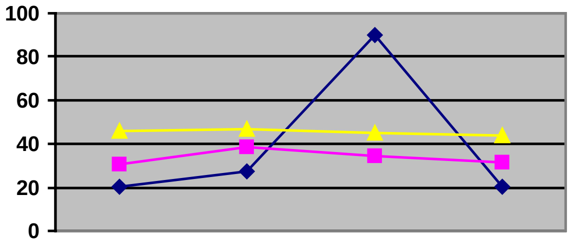

Flow chart

Visualizing structures & procedures

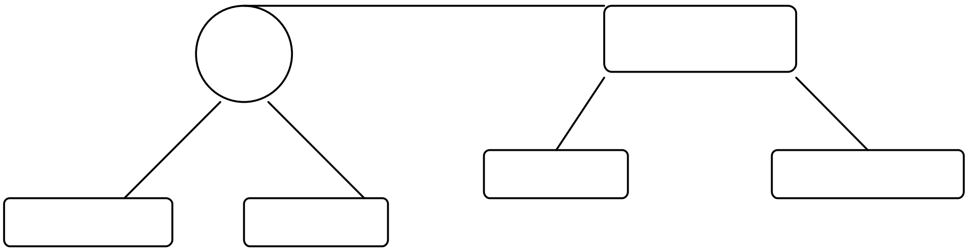

Apart from charts, many other forms can be used to visualize information, such as diagrams, tables, word clusters, definition networks, structural trees and so on. As we said already, visualizing techniques are also very useful for summarizing information.

When doing group work, students and trainees can also be asked to prepare a visual aid that supports the report on results they give to the whole class. While the visualizing process itself will already enhance understanding and learning of those actively involved, it will also be of benefit to the whole class: If only presented verbally, we remember about 20% of information. If an oral presentation is combined with visual aids, the retention span already increases up to 40%.

Whatever form we choose for visualizing information, the most important requirement is that it is clearly arranged and easy to remember.

Example **"Diagram"**
A schematic drawing can be used to illustrate and simplify complicated technical and other learning material, e.g. engines, machinery, the human body etc. Diagrams help us to understand and remember information better, particularly when having been drawn by ourselves. In textbooks, they usually are labeled already; for reviewing purposes we can cover the proper terms and try to label the diagram ourselves. Terms we find hard to learn can be covered with another color so they immediately stick out when we do another review.

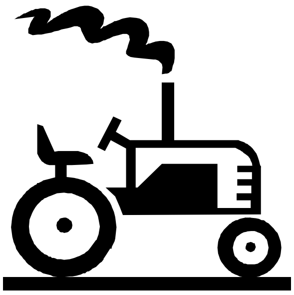

Exhaust pipe

Steering wheel

Driver's seat

Engine

Wheels

Example **"Table"**
Tables are useful to list information that can be grouped according to categories. They help to structure and clearly arrange information, which else may be confusing if only presented as plain text.

Continent	**Country**	**Capital**
Asia	Philippines	Manila

Example **“Cluster”**

Clusters are another way to group information. While the heading or generic term is in the center, terms related to it are arranged around the center by groups. Clusters can also be used to visualize key words with regard to a particular topic. They are also very useful in processing the results of brainstorming that have been noted on meta-cards.

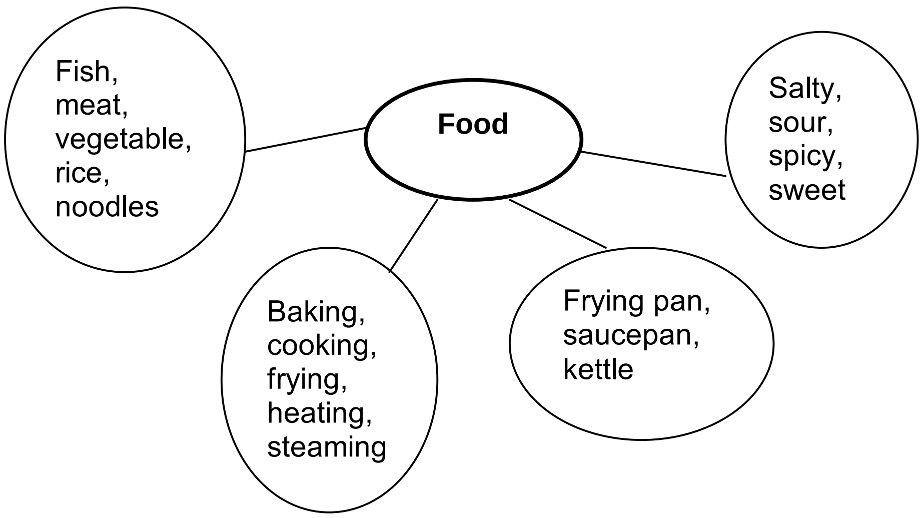

Example **“Definition network”**

Definition networks can take on many different forms. The one below is hierarchically structured; others can display a causal structure visualizing causes and consequences of a particular problem.

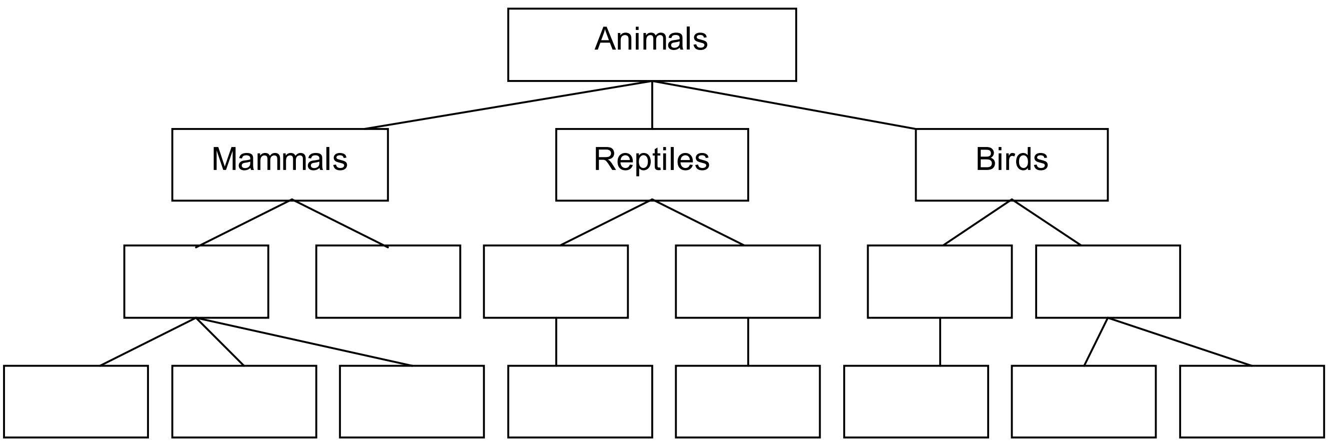

Visualizing techniques are not only useful when summarizing or presenting available information to others, they can also be used in preparation for a presentation. Though students and trainees are mostly required to copy, make notes or use other forms of reproductive writing, training and study also involve writing reports, presenting papers and giving a lecture.

Usually, it is not enough just to start writing about a topic. If not given any thought beforehand, we may forget important aspects or not keep to the point. The first step therefore is to collect information and ideas, after which the material has to be sorted and sequenced in a way, that one point leads to the next. This outlining guarantees a logical flow of information and arguments. A very helpful exercise in that context is preparing a visual framework for writing. If executed thoroughly, the writing process itself will hardly pose any serious problems.

Frameworks for organized writing

1. ....
    - 1.1. ....
    - 1.2. ....
2. ....
    - 2.1. ....
    - 2.2. ....
    - 2.3. ....

Plan for outline

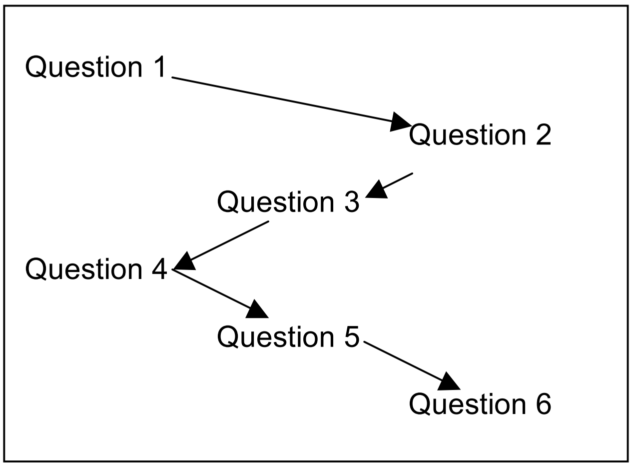

Chain of questions

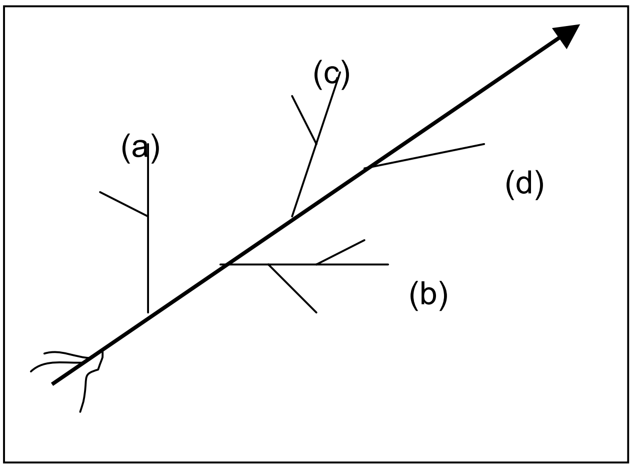

Tree frame

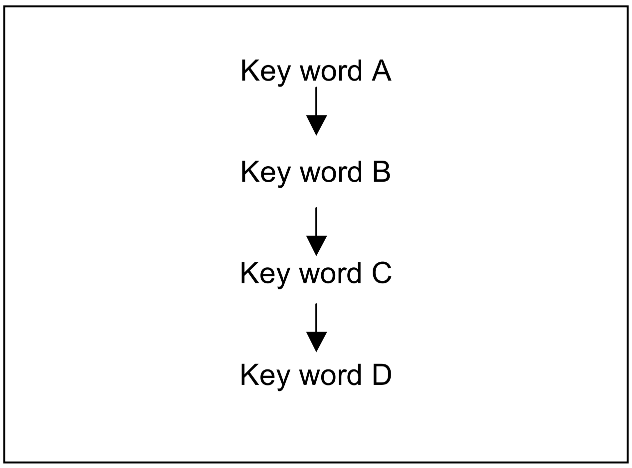

Chain of key words

7. Mind mapping

Although valuable as a tool for structuring ideas in a formal, orderly fashion, outlining is useful only after the real thinking has been done. Trying to generate ideas by outlining, we will find that it slows us down and stifles our freedom of thought. We could also say it is illogical to try to organize our ideas before we have generated them!

Outlining is a linear note-making system, which excludes our brain's capacity for color, dimension, synthesis, rhythm and image. Instead of variety, it guarantees monotony; it only involves the left hemisphere of our brain, the logical brain, while suppressing the creative half. However, when we start to think about a particular topic, chances are that ideas, key words, and images float into mind, one associating with the next. Instead of constructing whole paragraphs or ordered outlines, our mind jumps from one idea to the other; we daydream and doodle all of which is part of the creative thinking process. Mind mapping is a method for visualizing and continuing this natural thinking process on paper.

The example below shows a sketch of a mind map about "Training". While the topic of the mind map is printed in bold letters at the center, major key words related to it are arranged around it and linked to the center by branches. Whenever possible, symbols and drawings are used instead of words.

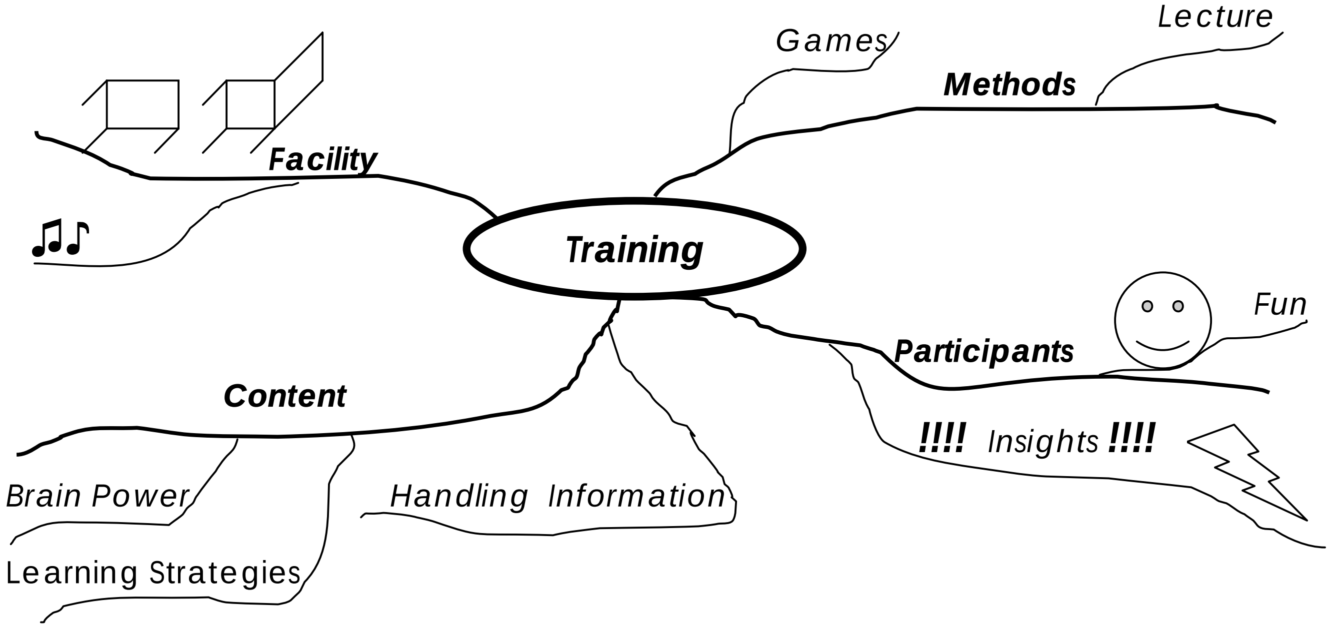

Mind mapping allows us quickly to start and generate more ideas in less time. While all outlines tend to look the same, each mind map looks different. Thus, the result can be remembered much easier due to its particular characteristics.

Mind mapping nurtures our unique, individual self-expression; regular practice will help us to discover our own originality. All we need to begin mind mapping is a topic, a few colored pens, and a large sheet of paper.

Rules for Mind Mapping

1. We begin with a word, symbol or picture representing our topic.

   We put it at the center of a blank page.

   We use the paper in landscape format.

2. We write down key words.

   We connect them with lines (branches) radiating from our central image.

   We print key words for easier reading.

   We print one key word per line/branch.

   We create side branches for points related to the key words.

3. We use colors, pictures, dimensions and codes for emphasis/association.

   We highlight important points, e.g. using text marker.

   We illustrate relationships using colors, arrows etc.

Mind maps are mirrors; they show us how the brain looks and works. At the same time, they also stimulate the right and the left hemisphere of the brain. While they make use of linking, their visual excitement helps the memory: ideas are easier to recall. Therefore, they are also easy to review, that is to be recreated from memory and checked against the original. They save time since they only record key words.

We can use mind maps for:

- Teaching/training
- Making a speech/presentation
- Project planning
- Writing reports/essays/books
- Brainstorming sessions
- Problem solving
- Creativity
- Taking minutes

8. Seminar papers

When asked to present a paper, we can make use of all the various techniques in handling information: from researching information over reading and evaluating it to structuring, sequencing and designing it. As for students and trainees, they must be familiarized with these techniques and made aware of the features to be considered when preparing a paper.

Papers usually consist of three major parts:

Introduction	Topic, reasons for topic, importance of topic
Main part	Development of central ideas/main bulk of information
End	Summary/Result/Conclusion

The following features should be considered:

Title page	Title/topic, subtitle, author, purpose of presentation, month & year
Table of content	List of numbered chapters and respective page number
Bibliography	List of books used for writing the paper stating name of author, title, place and year of publishing, appearing in alphabetical order
Quotes	identified by quotation marks, statement of source inclusive page number

Unit 2 Learning Strategies

1. The importance of learning methodology

When learning, many students feel insecure since they lack the needed methodological competence and routine. In the classroom, methods are usually teacher-oriented: it is the teacher who prepares the learning units for the students. In turn, students often feel helpless when not given instructions by a teacher. Simply calling on students from time to time to use different learning methods on their own is not enough: methods have to be taught as well. Since they can only be learned through applying them, repeated and varied exercises must be part of the classroom activities.

The emphasis on the subject matter as such in most curricula leads to the neglect of learning methods. The importance, however, of methodological skills is increasing in many job related areas. Also, life-long learning has become a regular feature of the working life. Therefore, education should be more than just teaching the subject matter. Education should also aim to equip students with sound methodological skills so that they will become competent, self-reliant learners.

This will also help to improve learning results: Students, who have learned how to learn on their own, are usually higher motivated and thus perform better.

Learning how to learn should be part of the curriculum.

A first step in that context is to assist students to become knowledgeable about their own preferences for learning. Being aware of our own learning style allows us to make use of tips and suggestions that comply with our individual pattern. Thus we can also compensate for inputs delivered in a way we do not favor.

2. Input channels and learning styles

As we saw in Unit 1, we all develop individual learning patterns. These can be grouped according to three major learning styles related to the sensory input channels of looking & seeing, listening & hearing and touching & feeling:

Visual

Visual learners find it easier to take in new information through pictures, diagrams, charts, films etc.

Auditory

Verbal learners find it easier to take in new information through the spoken word.

Kinesthetic

Kinesthetic learners find it easier to take in new information through copying demonstrations and getting physically involved.

We may dominate in one style and have a preference for another. Previous learning may have been hindered if it did not cater for our learning style. Schools for that matter usually are not geared to kinesthetic learners. To find out which channel we have an inclination for, the following statements will give us a first idea.

- ☐ When I touch an object and play with it, I can describe it much better as opposed to just thoroughly looking at it.
- ☐ Only when I have made a paper airplane myself do I know how it works. From observing alone I cannot remember it.
- ☐ Explaining me how to operate a machine or equipment, or being able to observe an experiment during instruction, I remember the process much better as opposed to only having a hands-on experience.
- ☐ I can find a way through town easier when I not only have been explained or shown it on the map, but also traced the route with my finger.
- ☐ I understand the design of a blossom or leaf better when looking at a drawing in a book than by examining it myself.
- ☐ I remember experiences better than conversations or what I read.

The following statements help us to double-check whether we are aware of our preferred learning style followed by some tips.

Visual learners

◊ Use phrases such as ‘I *see* what you mean’, ‘I get the *picture*’, ‘That *looks* right’

◊ When relaxing, prefer to watch a film or video, go to the theatre or read a book

◊ Prefer to talk to people face to face

◊ Fast talkers, dislike listening to others

◊ Forget names, remember faces

◊ When lost or need directions, prefer a map

◊ When inactive, tend to doodle or watch someone/something

◊ When angry, are silent and seethe

◊ Reward people with a note or card

◊ Well dressed, tidy and organized

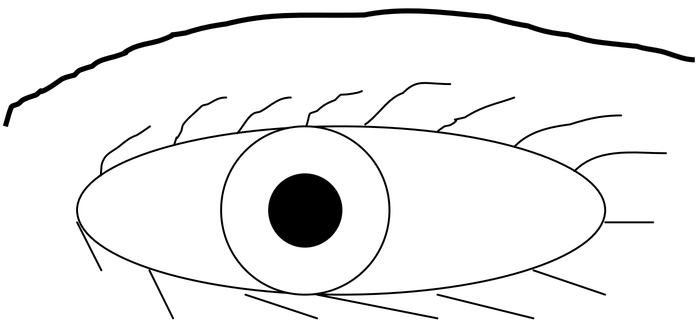

Visual learners learn best by:

- Writing down key facts or, better still, mind map
- Visualizing what they are learning
- Creating pictures/diagrams from what they are learning
- Using time lines, for remembering dates
- Creating their own strong visual links
- Using pictures, diagrams, charts, film, video, graphics etc.

Auditory learners

◊ Use phrases such as 'I *hear* what you are saying', 'That *sounds* right', 'That *rings* a bell'

◊ When relaxing, prefer to listen to music or radio

◊ Prefer to talk to people on the phone

◊ Enjoy listening to others, but impatient to talk; talk in a rhythmic voice

◊ Forget faces, remember names

◊ When lost or need directions, prefer to be told

◊ When inactive, tend to talk to themselves or others

◊ When angry, express themselves in outbursts

◊ Reward people with oral praise

◊ Do not like reading books or instruction manuals

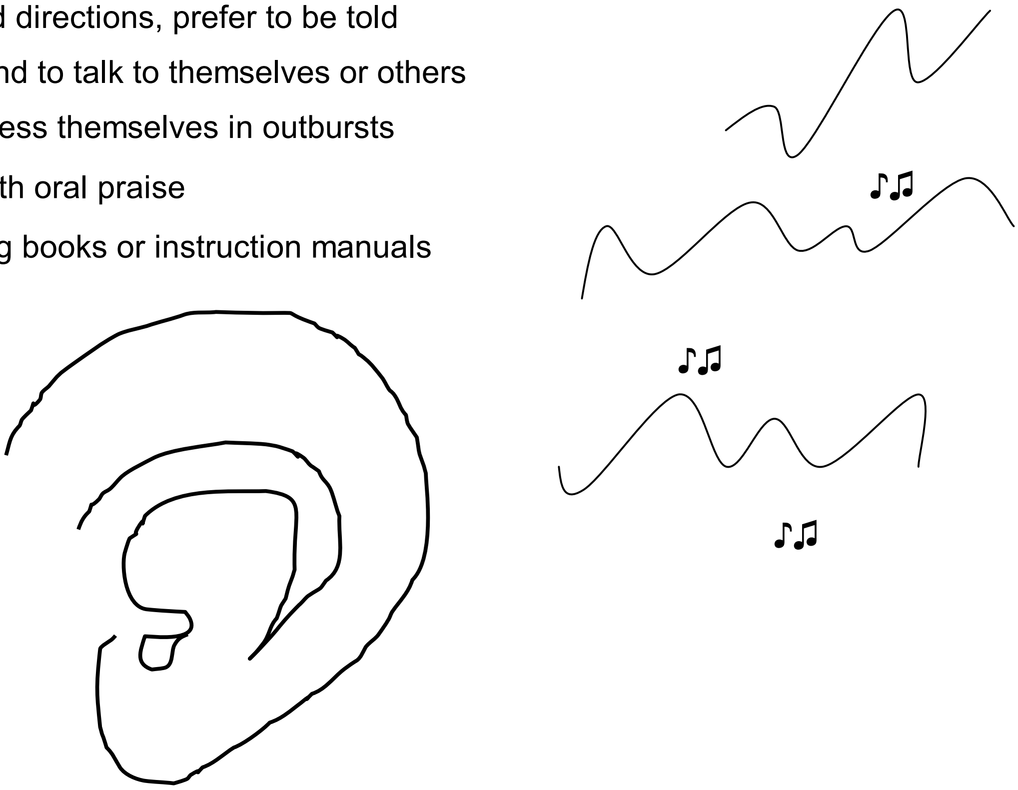

Auditory learners learn best by:

- Hearing a seminar, presentation or explanation
- Reading aloud to themselves
- Reading with emotion or accent
- Making a tape of key points to listen to in the car, whilst ironing etc.
- Verbally summarize in their own words
- Explain the subject to someone else
- Use their own internal voice to verbalize what they are learning

Kinesthetic learners

◊ Use phrases such as ‘That *feels* right’, ‘I found it easy to *handle*’, ‘That *touched* a nerve’

◊ When relaxing, prefer to play games and sport

◊ Prefer to talk to people whilst doing something else

◊ Slow talkers, use gestures and expressions

◊ Shake hands with people they meet

◊ When lost or need directions, prefer to be shown the way

◊ When inactive, fidget

◊ When angry, clench their fists, grit their teeth and storm off

◊ Reward people with a pat on the back

◊ Cannot sit still for long periods of time

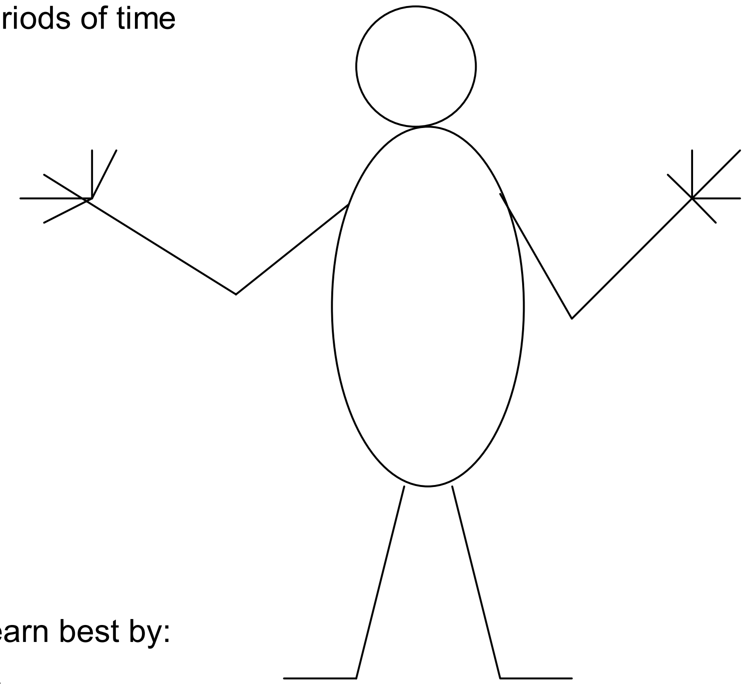

Kinesthetic learners learn best by:

- Copying demonstrations
- Making models
- Recording information as they hear it, preferably in a mind map
- Walking around whilst they read
- Underlining/highlighting new information/key points
- Putting key points on to index cards and sorting them into order
- Getting physically and actively involved in their learning

Learner Type Test

Described below are different ways of learning. To each statement put in a number in the box at the right according to how much you remember using this particular way of learning:
Put 3 when you remember a lot by using this way of learning.
Put 2 when you remember a number of things by using this way of learning.
Put 1 when you remember only a few things by using this way of learning.

Ways of Learning

a) I prepare a chart when working with a factual text. … … … … … … ☐

b) The teacher gives a lecture on the lesson topic. … … … … … … ☐

c) In biology, I collect various plants, dry them, stick them in a folder and write short explanations. … … … … ... … … … … … … … … … … ☐

d) Our teacher shows us a cartoon (no comments) about smoking. … … ☐

e) A student reads a text from the textbook to the class. … … … … … … ☐

f) I look at the pictures and drawings in the textbook. … … … … … … … ☐

g) I prepare a drawing covering a learning unit. … … … … … … … … ☐

h) I listen to an English language audiocassette. … … … … … … … … ☐

i) The teacher shows us slides concerning a learning topic. .. … … … … ☐

j) The teacher explains to me how the President is elected. … … … … … ☐

k) I write the words I have to learn on a notepad. … … … … … … … … ☐

l) I look at an exhibition in the museum. … … … … … … … … … … ☐

m) I read a text in the textbook. … … … … … … … … … … … … … … ☐

n) A student reports on the results of his/her working group. … … … … … ☐

o) I conduct a simple experiment during the chemistry lesson. … … … … ☐

p) I listen to a debate in the radio on an actual topic. … … … … … … … ☐

q) I look at a picture book about daily life in India. … … … … … … … … ☐

r) I note down the most important information of a text. … … … … … … ☐

Add the numbers you entered in the boxes!

Auditory learner type (hearing):	b + e + h + j + n + p	=	☐
Visual learner type (seeing):	d + f + i + l + m + q	=	☐
Kinesthetic learner type (doing):	a + c + g + k + o + r	=	☐

All previous tests and exercises may indicate that we favor a certain input channel but that we also remember well when involving another input channel. As we know already, multi-channel messages in general are most successful to achieve high learning results. For reading, for example, this could mean to

- Visualize the key message
- Read aloud or hear the words internally
- Get physically involved – underline, highlight, mind map etc.

Thus, various input channels are catered for and involved in the learning process. This is a good way to improve learning results.

3. *Input channels and memory performance*

How well we remember newly learned information, depends to a large extent on the input channel involved in acquiring this new information. The following test is related to the performance of our sensory and short-term memory while it also helps us to find out what preference we have with regard to the input channel.

The test involves the three major learning styles: kinesthetic, audio and visual, the latter being divided between reading and observing. After each presentation of words to be remembered, mental arithmetical exercises are being conducted for 30 seconds (see box below). Then, 30 seconds are given to recall the words/terms presented. The result of correctly remembered words has to be transferred to the assessment sheet.

First, the person conducting the test shows different words one by one for about two seconds each followed by 30 seconds mental arithmetic and 30 seconds for recall.

Reading:

Plastic bag	rice	candle	newspaper	basket
Bicycle	cat	soap	forest	money
Horse	television	shop	guitar	bucket

Next, he/she reads a list of 15 words loud and clearly with an intermission of two seconds between each word followed by the same procedure as described above.

Hearing:

Street	mountain	pig	bread	slippers
Plate	wardrobe	bus	lamp	river
Umbrella	stamp	hut	radio	flower

Then, 15 drawings are shown representing one item for two seconds, again followed by mental arithmetic and 30 seconds for recall.

Seeing:

Tree	house	car	cup	key
Airplane	faucet	clock	telephone	bottle
Hat	suitcase	boat	table	book

Finally, day-to-day items are given to participants; they can be held for 2 seconds each and are then passed on to the next participant. After mental arithmetic and time for recall the final assessment is made.

Touching:

Scissors	ruler	paper clip	envelope	eraser
Pencil	ball	coin	sharpener	pocketknife
Rope	stone	spoon	diskette	ring

The results of each exercise are noted in an assessment chart. The diamond with continuous line in the example below shows the result of a person who has remembered all 15 words in each category, which is the maximum result. The diamond with the dotted line shows the result of a person with a preference for seeing and touching while having problems with reading and listening. This person should try to visualize the learning material and put emphasis on graphic presentation. He/she will probably have problems when just listening to lectures or reading textbooks without getting physically involved. The bigger the diamond, the better the memory performance. The more even the diamond stretches to all four sides the more the different input channels are equally good.

Assessment chart

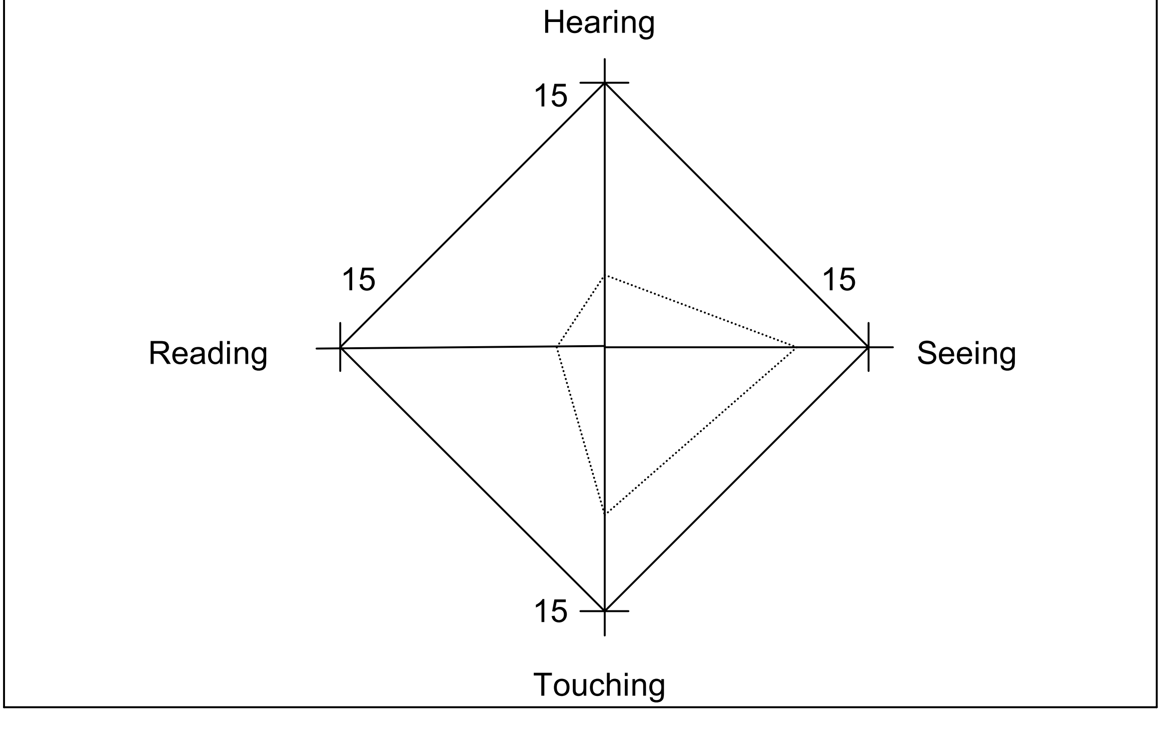

Mental arithmetic exercise box

3 x 7	3 : 3	6 x 5	2 x 10	5 x 5
2 + 17	8 x 5	11 – 4	1 + 6	35 – 6
9 – 3	10 – 7	8 : 4	7 x 2	2 : 2
4 x 4	5 : 1	17 – 4	8 x 7	6 x 7
9 + 3	7 x 7	7 + 3	8 x 4	4 – 3
15 – 9	18 + 2	9 : 3	3 x 3	4 x 2

4. Enhancing memory and skills performance

A great part of learning is devoted to memorizing terms, definitions, names, words, dates and other facts. As already explained in unit 1, learning is most successful when both sides of the brain are involved, that is as many senses as possible. Another significant approach includes the systematic and active repetition of the learning material. Instead of just reading a text, a list of words or some historical dates it is much more effective to actively and consciously instill this information in the memory. This can be achieved through written summaries, structuring, marking and reading aloud of new information, talking about it, question and answer games, mind maps etc.

The importance of repetition can be seen in the following charts: Chart 1 shows how much we remember of new information without repeating it. After one day, we already have forgotten half of the new information, and after 14 days we only can recall 10 %, quite a dramatic decline!

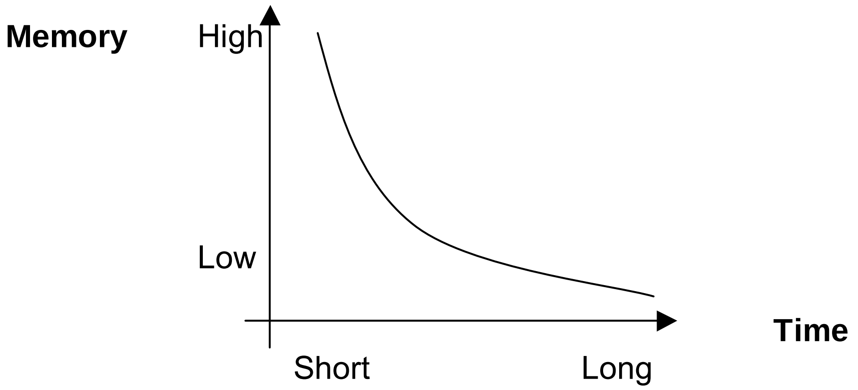

Chart 1

Chart 2 shows how much of the new information we remember after repeating it after one day: a considerable portion of the new information already is deleted after this short period of time. Chart 3 features a repetition of the learning material already during the same day we were exposed to it. Even if we don’t repeat it during the following days, we still recall quite a big portion.

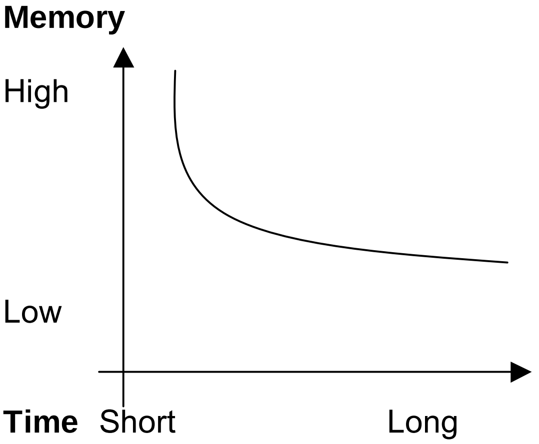

Chart 2

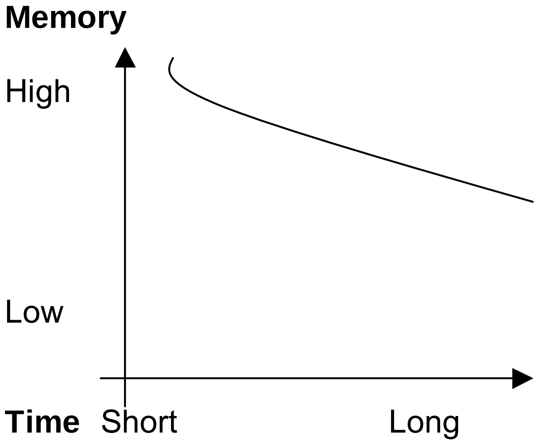

Chart 3

Of course, the result will also depend on the way we repeat – whether we get actively involved in the process or not, whether we repeat systematically or not. There are also other factors influencing the outcome of our efforts. For example, newly learned English words compete with a lot of other information. About ten units of more or less complex news can be remembered per day as an average. If we spend a lot of time in front of television or the computer each day, the newly acquired information will have a hard time to find its way to the long-term-memory. What is being stored there is also decided during night: Sleep stabilizes the content of the memory – but only when the new information has been used during the day. If the day-to-day relation is lacking, the whole learning effort is useless in the long run.

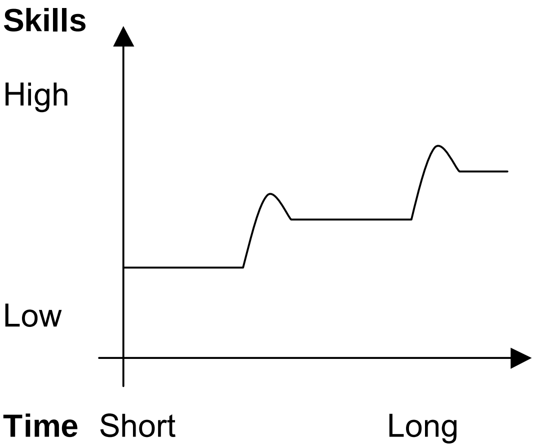

With regard to skills, repetition in the sense of exercising is also crucial for the long-term success. However, this learning curve looks quite different: As shown in the left, it starts at a certain level with a steady base line called a plateau. After continuous exercising, it rises sharply and immediately after drops a little bit: it has reached another plateau on which it continues steadily until there is another sharp rise or ‘learning high’.

This curve tells us that training is a continuous, ongoing process. We first have to pass through a plateau before we can move on to the next level. The decline after the experienced ‘high’ is part of this process to stabilize our achievements and is the confirmation that learning takes place. In other words: We have to learn to love the plateau!

Though repetition is crucial for the success of our learning efforts, a lot of learners commit a serious mistake when preparing for an exam: Instead of planning and scheduling their work properly, they wait for the last day and then start repeating all the learning material. They believe they will not forget so much when they repeat it just briefly before the exam. This, however, is quite a wrong assumption.

Since our memory needs some time before it reliably stores new information in a way that it can be recalled later, it is useless to start learning completely new material just one day before an exam. On the contrary, this may cause simply confusion and chaos, which, in return, lead to insecurity, nervousness and lack of concentration. Finally, starting late also means that too much information has to be reviewed. This attempt will lead to learning for hours on end, which will have just the contrary effect: instead of remembering what we learned, we begin to forget it. This is illustrated in the chart below: the longer we learn without a break, the lesser we remember. The result of this unfruitful learning effort is very often confusion paired with self-doubts and exhaustion.

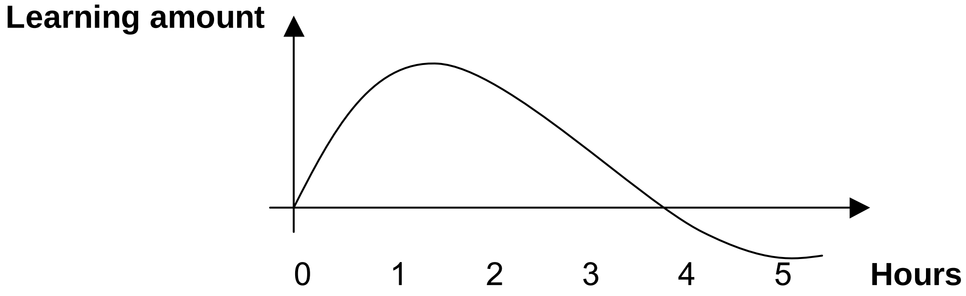

Instead we should start reviewing manageable portions early and regularly. Learning with regular breaks (dotted curve line) keeps the recall high, due to increased effects of primacy and recency: the start and the end of a learning session are more memorable than the middle. Also, during breaks the subconscious processes the new information as well as it relieves physical and mental tension. The amount we recall while learning without breaks is much lesser (continuous line).

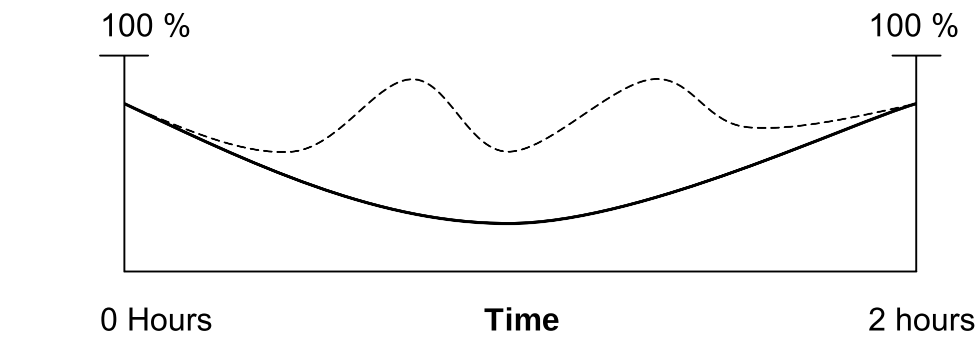

5. Planning learning activities

Portioning

The first step in planning our learning activities is the portioning: Before we start with our homework or preparation for an exam, we divide the material to be learned in manageable units and tasks. These can be written on small pieces of paper and put on a pin-board. Thus, we not only have a clear idea of the work to be undertaken, we can also plan and schedule minor or major breaks between the different units. We can also see how the amount to be learned slowly decreases – it provides us with a sense of achievement!

Easy start

The next important step is the sequencing of our learning: with what to start? In order to get into the proper learning mood, it is recommended to start with an easier assignment. Also, the first 15 minutes are usually spent to get going and concentrated on the task before we reach our full efficiency. So if we have an interesting and promising first job to be done, the more stimulating it is to continue with learning since our self-confidence grows with success, thus increasing the chance that we can also handle difficult assignments.

Sequencing

Once successfully started, the performance chart usually stays high for quite some time. Therefore, more difficult tasks are completed during this time, after which we again switch to tackle easier tasks. We may finish with a final complicated assignment, which is easier to be executed with leisure time just waiting around the corner.

Variety

For sequencing, variety is an important factor: it prevents monotony thus increasing the percentage of recall. It also makes learning more interesting. For example, similar subjects should not be learned one after the other, like learning languages. Also written and oral exercises should alternate, difficult with easy ones and son on.

Break-time

With regard to breaks, shorter and longer intermissions help to keep mentally fit. After 30 minutes, a 5 minutes break is useful for getting up, stretching the body, fetch a drink etc. If we learn for a longer period of time, we should include a longer break of 20 minutes after one to one and a half hour working time. The break should really be used for relaxing, e.g. listening to music, going for a short walk outside or just doing some physical exercises and not for other strenuous activities like watching television or working on the computer. Activities like these would interfere with the learning process and reduce attention, jeopardize the learning success and unnecessarily prolong the working time.

Scheduling

To prevent having to learn too much, learning activities need to be properly scheduled. This means to be aware of how we use our available time. If, for example, we always complain about shortage of time, a proper monitoring of all our activities for one week can be very helpful: We can find out whether our time management is effective or whether we are wasting time. Based on these findings, activities can be properly scheduled – learning as well as leisure. The following statements may give you an idea how you make use of your time.

Tracking down the time thieves

- I talk too frequently and long to my friends on the phone.
- I spend too much time in front of the tv or computer.
- I am dawdling too often and avoid unpleasant tasks.
- Often, I work too grimly; this deprives me of mental fitness and costs me time in the end.
- I have so many hobbies that I have hardly any time left for schoolwork.
- I search far too long for certain items because I do not keep things in order.
- I am distracted too much through visitors and other disruptions.
- I like to listen to music when learning; that way, I cannot keep to the point and need more time.
- Very often, I just start working without any plan, which prevents proper progress.
- I can hardly say No when others try to keep me from working.
- I tend to keep putting off my work, which strains me somehow and paralyzes my work.
- Often, I make things difficult for myself, I brood and can’t move on.
- I do too many irrelevant things and am not concentrated on the important tasks.
- Usually, I only work under pressure; as a consequence, I tense up.

The evaluation of this exercise and the detailed monitoring of our activities for one week help us to assess how we spend our time and which are the problem areas. The next step is to introduce proper planning. For this, we use our diary and schedule important activities such as when to start preparing for exams etc. When scheduling, we consider the time of the day for our activities – whether we perform best during morning or afternoon. We also plan days off as a reward or a special treat for good results: We commit to learning, but we also reward ourselves and enjoy the days off!

6. Preparing for exams

Planning

As we already said, it is important to start preparing for an exam early enough: last-minute learning can have the contrary effect. Therefore, we have to schedule our exercising and reviewing activities well in advance. Like for learning in general, all rules are also applicable to exam preparation: portioning, sequencing, keeping the learning varied, getting actively involved through talking about it, preparing charts, drawings etc. The more graphic we prepare the learning material and the more we get actively involved, the more we remember. Preparing a codigo is also a good form of preparation: we don't have to take it with us for the exam; the preparation itself helps us to memorize the most important!

Working under time pressure

Another important preparation step involves working under time pressure. Exams only allow limited working time; we can test to work under time pressure by working through previous exams under a given time limit. We can also pick out particular exercises and set a clock so we know whether we can cope or not. Thus, we not only exercise how to work under time pressure, we also develop a feeling for time.

Staying calm

The morning before the exam we should avoid repeating the learning material since it will increase our tension and nervousness. We also try to stay away from heated discussions among classmates about the exam's topic: all what causes insecurity or stress is of disadvantage!

Clarifying the demands

As soon as we obtain our exam papers, we check all the exercises in order to assess whether we understand what we are asked to do. If we are still unclear what is expected of us despite intensive thinking, we ask the teacher, even though this might not be welcomed. Afterwards, we arrange on the sequence of the tasks and allocate the available time. For the start, we tackle something easy – not necessarily the first exercise – so we have already achieved something, which, in return provides self-confidence and optimism. If we get stuck with a difficult exercise later on, we switch and work on exercises we can solve. Thus, we ensure to collect as many points as possible.

Sticking to the topic

During work we make sure we stick to the topic. Writing too much, not concentrating on the essential or avoiding getting to the point only does more harm than good. It also leads to waste of time, which, as we all know, is scare during an exam.

Rewarding ourselves

When we finally receive our results, we make sure to recognize and reward our successes: It encourages positive emotions about learning, ensures that learning is fun, enjoyable and worth doing again. Although incentives should be given along the way, the end deserves most of the attention. All too often, rewards are overlooked and any success passes unrecognized, never to be repeated.

7. The learning environment

The following statements will help us to find out what kind of learning environment is most conducive for us. First, we look into the personal learning atmosphere.

My learning results are best

- When music is played during learning
- When I am not distracted by any kind of noise
- When I am alone in the room
- When someone I like stays with me in the same room
- When I am together with my classmates
- When I am surrounded with strangers (atmosphere of a café)
- When I have eaten before I start learning
- When I can eat or drink during learning
- When I am in a good mood
- When I am angry or frustrated
- When I am looking forward to something nice after I finish learning

The next set of statements describes the learning atmosphere at school.

- I can follow some teachers very well, with others I have difficulties
- There are teachers I am afraid of
- With these teachers my marks are usually low
- With these teachers my marks are usually high
- I feel inhibited by my classmates or colleagues
- In a certain environment, I can concentrate myself very well, in others not
- I often experience thinking blockades and I do not understand despite repeated explanation

Our answers to these statements make clear what learning conditions are favorable for us and what conditions cause stress or even mental blocks. Though there are individual preferences and dislikes, some general aspects should be considered:

The Workspace should be inviting and encouraging to study. Distractions should be removed while everything needed should be at hand: books, pens, rulers etc. Posters and mind maps on display can help to stimulate the mind and get into the right learning mood.

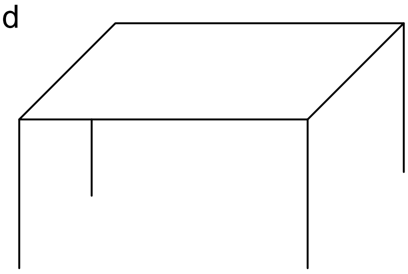

The desk or table should have navel height and as much space as necessary: Beware of cramping! The chair should be comfortable, straight backed and high enough so our feet are flat on the floor and the thighs parallel to the ground. A good posture increases the supply of blood to the brain.

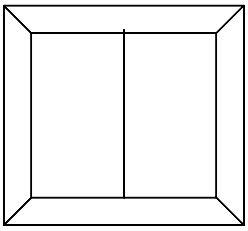

The Working Conditions should allow for proper light – natural light is best, such as sitting next to a window. For artificial light, a standard bulb is better than fluorescent. Since oxygen is essential for the brain to function, the cleaner and fresher the air the better. At breaks, spending time outside in fresh and clean air is most recommendable.

Mind & Body should be in the right condition: While sufficient sleep and regular rest is a must for our brain to function properly, unlimited television viewing and hour-long playing of computer games is a clear no.

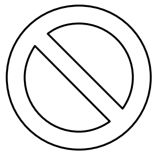

Regular exercises help to clear the arteries and provide oxygen for the blood: Our brain uses 25 % of our body's oxygen and blood supply. A healthy, balanced diet also contributes to learning success; too much sugar, starch, caffeine, alcohol and other unnecessary drugs lead to mental dullness.

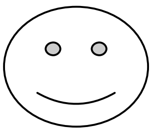

Energy for learning is released through relaxation. Before starting to learn, we should try to get into a calm and positive mood. Simple relaxing exercises at the start and during break times can help us.

With our eyes closed we

- Sit or stretch out and listen to relaxing music
- Tense and relax each muscle in turn, starting with our feet and working up our body
- Imagine walking down a flight of stairs; after each step, we exhale and say 'I am even more relaxed now'

8. Learning difficulties

A common complaint of students is that they spend a lot of time for learning, yet the test result is not satisfactory. Possible reasons for the low success rate can be found in the previous paragraphs on learning strategies; when the suggestions mentioned there are followed over a longer period of time, it surely will show in the results. However, students may need guidance and advice when encountering problems. They may not be aware of the mistakes they are committing when learning. Also, they need to be familiarized with learning methodology during school time so they can make use of it for their own individual learning efforts eventually.

Causes for learning difficulties are of varied nature. Particularly young people may display certain characteristics or behavior that affect their learning success:

Mental sphere:

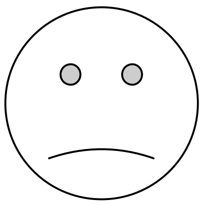

- Reduced ability to structure when acquiring information
- Reduced ability to abstract and conceptualize
- Limited ability to transfer known facts to new situations
- Restricted imagination
- Restricted perception
- Reduced memory performance
- Reduced ability to concentrate
- Language deficits

Emotional sphere:

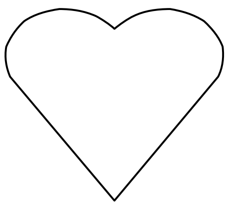

- Lacking emotional stability
- Strong orientation on needs when acting
- Rather passive drift approach than active problem solving and shaping of life
- Tendency for depression or aggression
- Deficiency in acknowledging and expressing own feelings
- Strong fear of failure
- Negative self-image with low self-esteem
- Low staying power, little perseverance
- Aversion against school and school tiredness

Social sphere:

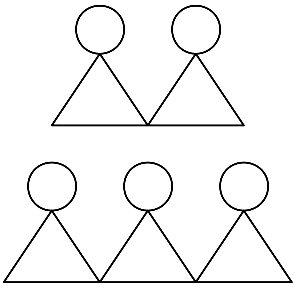

- Reduced ability and willingness for cooperation
- Difficulties with accepting and coping of social role
- Social behavior ranging between being the clown or being strongly inhibited
- Loner
- Emotional outbursts
- Problems to subject to social rules

Physical sphere:

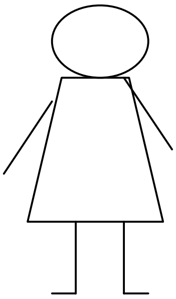

- Frequent delays in physical development such as muscle development, growth, sexual maturity etc.
- Reduced performance with regard to speed, coordination and strength during work proceedings
- Weakness with fine motor skills and therefore with precision
- Poor coordination between muscle activity and perception

9. Overcoming difficulties

When comparing research studies on normal young people and young people with learning difficulties, the latter group shows a reduced performance when receiving and processing information. This means these young people have more difficulties than others to receive and process new information in their short-term memory in a way that it can be stored in the long-term memory.

This seems to suggest that they don't have problems in general to store and recall information later on provided that they were able to store it in their long-term memory. Therefore these learners need more time, more repetition and more assistance on how to memorize the learning content, so it will migrate from the short-term to the long-term memory.

Students and trainees can remember sharply outlined and well-structured learning material much better since it also offers a structure to process it in the short-term memory and then store it in the long-term memory.

Easy to remember:		Hard to remember:
Meaningful		Senseless
Connected		Isolated
Systematic		Unsystematic
Clearly arranged		Confusing
Structured	Information	**Unstructured**

As teachers and trainers we can enhance the learning process, particularly in skills training, by:

- Counting the working steps with the fingers, thus recalling the sequence of actions
- Formulating What-How-Why questions and answers and asking the trainee to repeat them while he/she tries on his/her own
- Speaking out loud while conducting work: loud thinking along, loud imagining, so the trainee can follow the thinking process
- Creating mnemonics
- Linking learning material to reality of student/trainee
- Developing association patterns
- Drawing a flow chart to visualize a procedure/process

Repetition is crucial for storing new information in the long-term memory. As teachers and trainers, we can encourage students/trainees to enhance the results of review by:

Learning with a partner or in a group

Being in a group among peers, it is much easier to ask questions, which may be considered “stupid questions” in class. Thus the student can ask all the things he/she may be expected to have understood or to know already without loosing face. At the same time, the student can help to answer questions of others: We are learning most when we have to explain something to somebody else.

A learning group can be formed part-time to prepare for an exam or as a regular way of learning together – subject related or doing homework in general.

Preparing visual aids

Students should be advised to prepare visual aids like mind maps, charts etc. on their own while learning. It will enhance the understanding of the learning material since it needs to be processed for visualization. At the same time it supports the remembering of information since the learning material is linked with a visual.

Using a learning index-box

A learning index-box is very useful for learning vocabulary or any other material, which has to be repeated for memorizing it well.

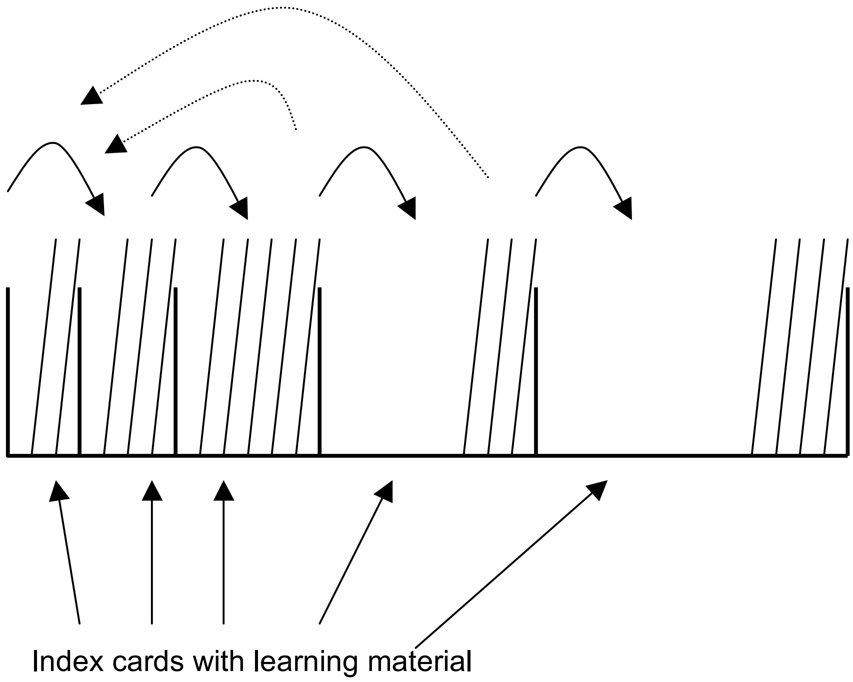

All index cards start in the first compartment. When learning and reviewing, index cards we have processed correctly move on to the next compartment until, after five rounds of reviewing, they reach the final compartment. Index cards we have not memorized stay or are transferred back into the first compartment. Each learning session involves all first four compartments until all index cards have reached the fifth compartment. This process can be repeated after some time meaning all index cards go back to the first compartment until we decide to sort out those we really have learned well. Of course, new index cards with new learning material can be added all the time.

Deutscher
Entwicklungsdienst

Bibliography & Further Reading

Gelb, Michael J.:
„How to Think like Leonardo da Vinci“
Random House, New York, USA, 1998

Hayden, Paul:
„The Learner's Pocketbook“
Management Pocketbooks Ltd., Hampshire, UK, 1995

Industrial Occupations Promotion Centre, ZGB (ed.):
„Pedagogical Qualification for Trainers and Instructors in Vocational Training“,
German Foundation for International Development, Mannheim, Germany, 1996

Lefrancois, Guy R.:
„Psychological Theories and Human Learning: Kongor's Report“
Wadsworth Publishing Company, Belmont/California, 1994 (revised edition)

Klippert, Heinz
„Methodentraining: Uebungsbausteine fuer den Unterricht“
Beltz Verlag, Weinheim und Basel, Germany, 2000 (11th, revised edition)

Robert Schrembs
„Teaching in the TVET System: A concept for the training of vocational teachers“
Triga Verlag, Gelnhausen, Germany, 2001

Vester, Frederic
„Denken, Lernen, Vergessen: Was geht in unserem Kopf vor, wie lernt das Gehirn, und wann laesst es uns im Stich?“
Deutscher Taschenbuch Verlag, Munich, Germany, 1978

WOOD PRODUCERS ASSOCIATION OF CEBU

WOPAC Training and Service Center (WTSC)
Cebu, Philippines

Training Manual
on

SUPERVISORY SKILLS

These Handouts are part of the training manuals for a Two Year Training Course on Furniture and Cabinet Making

Author:	Organisation:	Contact Address:	Edition:
Jürgen Hierold	German Development Service Philippines (DED)	7 Juan Luna St., San Lorenzo Village, Makati 1223, Manila, Philippines e-mail: dedphil@pacific.net.ph	09 / 1998

BASIC SUPERVISORY SKILLS

This course was used for trainees from the furniture industry but can be adapted to any other industry.

The reason to give a small insight into the Supervisory Skills for vocational trainees was the fact that quite a few of the graduates were promoted into supervisory level soon after starting their contracts in the company and that they did not have any knowledge about it.

SUPERVISORY SKILLS Edition 9/98 Prepared by: Jun Lim / Emil Torrejas / Juergen Hierold	Handout Nr: **SP01**	Subject: **ORGANIZATIONAL STRUCTURE /RESPONSIBILITY**

1. 0. 0. INTRODUCTION

Just imagine: Until a few weeks ago you were a normal worker in the production line and you received your orders from your boss or a supervisor. They gave you instructions of what to do and how do to it and you were doing it. Two weeks ago the production manager of your company talked to you and offered you a job to be a supervisor yourself. You happily agreed because it means 30 Peso more every day and you do not have to do all the dirty work yourself anymore.
Last Monday you started your new assignment and you suddenly realize that this new job is not so easy after all. Before you had to deal only with the work itself but now you have to tell other people what they have to do!

Just think about some of the problems you suddenly have to deal with:

- Machines are not adjusted properly — Dimensions of the product are not accurate
- Wrong tools are used for the job — Wrong materials have been used
- Accidents are happening — Products are not finished in time
- The quality of the product is not good — Jobs take too long to be finished
- Your former buddies in the production line don't want to have a beer with you after work!!!!!!!

You wonder what is going wrong because you actually thought that you were a skilled wood worker.
Actually there is a big difference between the two jobs and you have to learn some new skills before you are really able to do your new job properly.

Exercise 1:
Make a list of a supervisor's duties and responsibilities individually, discuss them in the class, make a poster on the wall, keep it as a reminder as long as the course runs.

2. 0. 0. ORGANIZATIONAL STRUCTURE / SUPERVISORS RESPONSIBILITIES

Let us have a look at the organizational structure of your company to get an idea of what changed in your work life. In the picture on the right side you can see a rough layout of a company's structure. Now, you moved up from the workforce into your new position as a supervisor and that means that you moved up from being a **"Follower"** to being a **"Leader".**

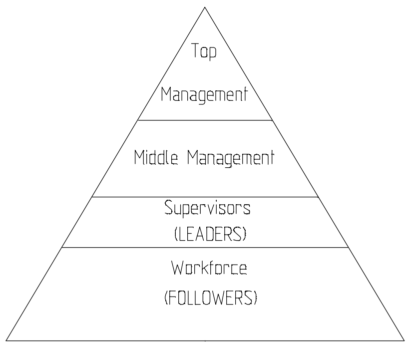

Here in this course we want to give you a first idea of what it means to be a leader instead of a follower.

As a follower you received your orders from the supervisor or the middle management and you were following these orders. Sometimes they would ask you for a statement about some problems and you had to report to them.
Your main task was to function as a worker and to do what you were told. The skills you had to provide were mainly technical, on how to run a machine and to use tools. Most of your labor was physical, like planing a piece of wood, the dimensions of the final product were given to you and you had to do it according to the order.

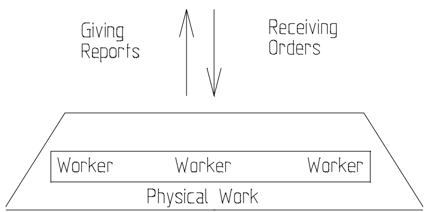

In your new position as a supervisor you will find a completely different situation to handle:

- You have to receive orders from the management and give reports to them **And**
- You have to give orders to the workers and receive reports from them.

Now it should be easy to understand that most of your work as a supervisor will be more mental and not so much physical. You need a better theoretical understanding of woodworking, that's what we provide you with in the other lectures like Technical Drawing, Mathematics…

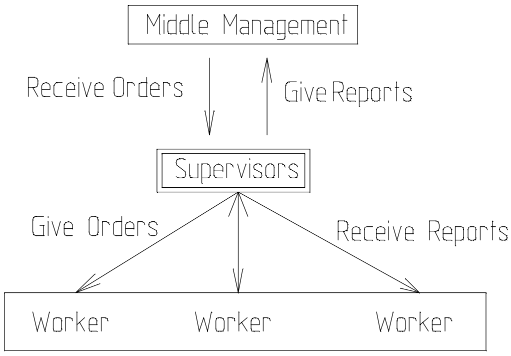

<u>Exercise 2:</u>
Split into groups of 3 – 4 people, go to the workshop and pick a machine like the circular saw, each one of the group should explain a certain function of the machine or a setup for a certain job to the others in about 5 minutes, discuss the results in 10 minutes.

If we have a closer look at the organizational structure we can see that you have even more responsibilities in your new work life:

2. 1. 0. Responsibility to the Middle and Top Management

The management is expecting from you to do a lot of things in your department or section. They want to be able to rely on you when it comes to the planning of the work in your section and the coordination of work with other sections (Example: You are the supervisor in the assembly, so you have to report problems to the management regarding the supply of parts from the machining section). You have to be able to train and select employees for specific jobs. It is very important that you are able to communicate with the workers so that they do understand their work assignments. To maintain work discipline and morale in your section you need to have a natural authority which has to be based on knowledge and skills. To make your section an efficient one you have to make production decisions (Which job has priority? When do we start with the next order? Which worker will be assigned at which machine? Will the spindle molder work more efficient if you assign two workers?). At the same time the management expects from you that you will maintain a proper cost control (Material waste, proper production flow, unproductive workers). In order to improve the productivity of your section the management expects written comments and suggestions about the situation.

2. 2. 0. Responsibility to the Workers of your Department

The workers in your section are the ones who will do the actual jobs like machining, assembly and so on. To achieve a high quality and In Time production you have to rely on your workers. A good working morale is a very important factor, get to know the special skills of your workers in order to assign them to the right jobs and explain all the matters connected to this assignments (special jigs, deadline, tools to use). If necessary you have to instruct and train workers for special jobs.
Try to create a trusting working climate were the workers will be able to talk openly about problems in meetings. Treat all workers equally, do not favor your old buddies from the production line because this will make others jealous. Handle workers problems correctly, have a good relationship with the personnel / staff department because they can help you in all sorts of explanations and problems like workers payment and benefits. Sometimes you might have to take over the role of a counselor but be careful that you do not get involved personally into the problems, it is very important that you stay objective in all department matters. Your workers will be efficient if you provide them with a predictible and stable work load.

2. 3. 0. Responsibility to Other Supervisors

It is very important that you get to know all the other supervisors very well in order to establish good working relationships with them. (Improve the work flow between the departments, exchange of information like deadlines for parts and products, quality and tolerance problems, create a supervisor team that can communicate and coordinate properly with the management)

2. 4. 0. Responsibilities to the Staff / Personnel Department

The staff department will approach you first regarding information about workers. You have to be able to judge requests for information from staff managers, try to be a middle man in these situations. Coordinate standardized reporting forms and instruments with the staff managers in order to judge the employees performance. Consult with appropriate staff managers to utilize their special expertise on staff problems (work attitude, late, drinking, fighting…)

2. 5. 0. Responsibility in Labor Matters (if company is unionized)

You have to know the basics of the CBA (Collective Bargaining Agreement) to keep a professional relationship with the union. You have to respect the terms of the agreement as a representative of the employer, even though you may personally disagree with it. Treat all workers equally, union members or not.

Exercise 3:
Split into groups of 3 – 4, in each group act as supervisors from: Machine Section, Assembly Section, Finishing Section. Discuss common problems between the three different departments like quality control, production flow between departments.

3. 0. 0. SUPERVISORY SKILLS

Now that you have an idea of all the responsibilities (quite a lot, don't you think???) we should try to think about skills you might need to fulfill all these responsibilities and do a good supervisor job. You realized already that your technical skills and knowledge are only a part of the skills needed to be a good supervisor.

3. 1. 0. Communication with Others

3. 1. 1. Giving Instructions and Orders

As a result of Exercise 2 we found that it is easy to follow the instructions of one student, but very hard to follow another one. Obviously one has the gift of being able to communicate very well, the other one not.
Which factors are important to instruct another person in the workshop?

- Knowledge of the technical facts and details
- Theoretical knowledge to support the demonstrations
- Authority
- Ability to demonstrate
- Self confidence
- Planning

It is very important that you know the technical details of the process you want to explain to somebody else, so, if you come from the production line yourself, you should be capable of doing so. All the processes of woodworking should be easy for you to explain, or are you using "This thing there" for words like "saw blade" and "fence" ?? If you do so, you have to familiarize more with the machine and the process before you start explaining things to somebody else.

You have to be able to demonstrate the work process, this will support your explanations very much. Think about safety aspects before you make a demonstration because you have to consider that the worker will copy your action later on.
Theoretical background knowledge is quite an important factor as well because it enables you to answer questions of the worker, especially when you are asked “Why is this like that” ??
You can only be self confident and have some authority if you learn and practice the above mentioned factors. The workers will only accept you as a supervisor if you have authority based on knowledge.
If you only scream and shout at them in order to be an authority, they will laugh about you at your back and not follow your explanations.
In order to give good instructions you have to plan them, especially when you are new in the job of supervisor. Before you give instructions, take a piece of paper and write down keywords for the processes you want to explain.

Exercise 4:
Write down the keywords on how to change a saw blade in a circular saw. Discuss the results in the class, come up with a final solution for this machine setup.

3. 1. 2. Receiving Instructions and Orders

When you were a worker you received your orders from a supervisor and now you receive them from somebody from the middle management. What is the difference between the two?

- As a worker you normally received an instruction for one job and when that was finished you got the next one. The communication was pretty easy because you and the supervisor spoke the same “technical language” and he could even help you with some complicated setups or jigs.
- Now you have to communicate with somebody from the middle management and you might have problems understanding him. What is wrong? The fact is that you and him are not speaking the same “language” anymore because you are a ”technician” and he is a “manager”. You have to learn to follow his instructions even so his technical knowledge might be limited. Apart from that you will not only receive one single instruction, but most probably orders for the whole day. You have to translate these instructions into technical language and distribute the different jobs to your workers. It is very important to write down the instructions you receive because there might be many of them and you might forget some details. With the help of these written notes you can make a plan for the day and you will be able to give proper instructions to your workers.

Exercise 5:
Your manager will give you instructions for today's workload of your department. Make written notes of these instructions. Ask questions about details you might not understand. Put the instructions you received from the manager into orders for your workers.

3. 1. 3. Importance of Staff Meetings

Hopefully there are regular staff meetings in your company because they are very important in order to improve the communication problems. It is necessary to create an open working atmosphere on these meetings, telling the truth and not using permanent excuses is very important. Only if facts are stated on these meetings you can start planing and changing problems in the production. Meetings have to be prepared, the main purpose of a meeting is discussing problems and not having a snack! Make an agenda of the topics you want to discuss and make notes while the meeting goes on! If you want to discuss production problems, do not say: “Our production is not working!” The result will be frustration because the problem you state is too big and as such unsolvable.

Try to break down one big problem into many small ones, delegate them to different workers and collect results. You will find that suddenly it is much easier to solve a big problem.

Exercise 6:
One of your workers comes to you and tells you: "The Circular Saw is not working accurately!" Try to break this big problem into small ones! Make a list of things that might be wrong on the saw.

Different meeting situations are possible in your situation:
1. The manager will ask you to **give a report** in front of the top management about the situation in your department.
2. You conduct a meeting with your workers in order to **give orders** on how to improve the situation in your department.

In both situations you have to be the **active person**, so again, better be prepared for the meetings:
- In the first case you might be asked why your department is not working properly. You should be able to explain the situation clearly, state facts and numbers, so it would be good to make some written notes before the meeting because you might forget things especially when you are excited about the situation. Try to take written notes of the management's recommendations in order to implement them later on.

- With the help of your written notes you will be able to come up with the right orders for your workers. Make a list of jobs for each worker before you conduct a meeting with them. If possible give them the instructions in writing with a deadline to finish the job. Try to split big jobs which will take weeks to do into many smaller ones, it will be easier for the worker to do these jobs. In general, be always open for discussions with your workers about how do to a job. Now, these guys are the ones who really have to do the job, so maybe they have some suggestions on how to do a job faster and better. Maybe talk with the management about rewards for good ideas in this respect.

Exercise 7:
Split into groups of 3 – 4, conduct staff meetings with your fellow students, discuss the situation in the lumberyard with them, give orders to them and check whether they understood them by letting them report.

3. 2. 0. Planning Process

3. 2. 1. Determination of Goals

Before we can start with the planning of the production we have to determine the goals we want to achieve. Normally you will do that first with the management, most of the time they will give you the production numbers (goals) to achieve in one day, week, month. Study the given information like Drawings, Bill of Materials carefully!
You have to consider some aspects for the determination of your goals:

- Output of the production = number of items to produce in which time (50 chairs in 1 week)
- Quality and workmanship = determine the quality of the product in relation to the time available
- Cost and Budget control = consider the costing when you produce the chair, production time and quality are relevant

Clarify these aspects before you start your production planning in order to achieve the right number of chairs before the deadline, in the right quality and within the cost frame.

3. 2. 2. Plan the Accomplishment of Goals

Now that we have predetermined the goals to achieve we have to ask: “How can we achieve these goals?”
You have to think about some given facts before you can continue:

- How many skilled workers do I have to do the job?
- Which machines / tools are suitable for the job and are they available at that time?
- Which jigs are necessary and are they available or do you have to prepare them?
- Are the right materials available / prepared for the job? (Contact Lumberyard, Machining)
- In a small company you even might have to do the costing, so you need the necessary data like material prices, available dimensions and machine hour rates.

With this information and the drawing etc. you are able to start the planning of the production for the next period. Discuss it again with the manager if the production goal is too high, be specific, have facts and numbers when you go to him.

3. 2. 3. Development of Plans and Actions

After you gathered all the data, you should be able to proceed with your planning to the implementing stage. You have to prepare for example **routing sheets** where all the processes for a certain work piece are described. You state as well the equipment used for each process, plus the estimated time for the process. Depending on your system you can determine the workers on the routing sheet as well. This way it is easy to utilize the manpower properly and you can inform the workers easily about their daily duties.

In a normal workshop you do not have only one order at a time but maybe three to four, so you have to make a **production plan** in order to coordinate the different orders with each other because they have different deadlines, materials, need different equipment and manpower. You are the one who has to know, at which stage each order is. This production plan can help you when you have to consider changes in your production line and the timing of deadlines. A proper production plan makes the discussion with the management much easier.
When you start making a production plan, try to incorporate your best workers into this process because they have the most practical experience and good judgement.
Try to update the production plan daily to make the most use of it. Check for “bottle necks” in your production line, machines like circular saw and spindle molders are often overloaded with work and the whole production line has to slow down because of one machine. Try to think of alternatives like: second shift for special equipment, different production processes where different equipment is used, more manpower in certain sections.

3. 2. 4. Controlling and Review Procedures as Part of Planning

Controlling is the work a supervisor performs to assess and regulate work in progress and to assess the results secured. In order to do so, we have to be able to establish some activities to analyze this progress:

- **Setting Performance Standards**

Before we can actually evaluate performance we have to set some standards and criterias to be able to do so. (Example: 2500 Table legs, Model # 23432 in 100 hours production time in the quality of the sample given to the customer)

- **Measuring Performance**

After setting the standards we can now record the results of the worker or production line. (After 50 hours production time, only 500 legs are finished, quality is lower than the sample)

- **Evaluating Performance**

Now that we have our actual production results, we can compare them with the standards from before and we will find out whether we reached our production goals or not. (Evaluation compares standards with results: 500 legs finished after 50 hours = lower than the standard, quality is not as good as sample = lower than standard)

- **Taking Corrective Action**

You have to take corrective action especially if you do not reach your production goals, meaning your production is too slow, the quality too low… (How can you make your production faster? Training of workers, better machines and equipment, use of jigs, bottleneck in the production, more workers necessary, another order is still blocking some machines, no materials allocated for this order)
Controlling and review procedures are essential for the implementation of plans. Without them you will never be able to tell whether you could accomplish the goals or not.
The above mentioned production plan is already one very important tool for controlling because you can follow the production process on it and you can identify bottle necks and other problems.
Try to set a **quality standard** for each specific product. This is especially true if you were sending a sample to the customer. Once the customer accepted the sample, you have to keep this quality standard and you can not send him products with a lower standard! If you have a **Quality Control Department** in your company, try to work together with them, so that you know all the quality factors before you start the production of the item.

If you are involved in costing, establish a proper **post calculation process** in order to check on the accuracy of your costing.
Check on the **physical accomplishments** (number of work pieces, in specific time, in a certain quality) of the workers, it is an important thing to know about the efficiency of each single person in the production line. The easiest way is to evaluate a worker's data from his punsh card and the routing sheets.

3. 3. 0. Technical Competence

Your technical skills are very important to be a good supervisor because like mentioned before you have to be the mediator between the management and the workforce. Talking to the management, they will be expecting from you some proper explanations of work processes, especially if you want them to invest in new equipment or tools. The workers will only accept you as a supervisor if you have at least the same technical knowledge compared to them Talk to the management about sending you not only to Supervisory courses, but as well to some technical courses in order to improve your theoretical and hands on knowledge. Before you were ordered to do things in a certain way, now you are the one who has to tell others how they should do things. Before you give instructions, think about what you say !!!!!!!

3. 4. 0. Teamwork and Sharing of Knowledge

Once you are accepted by the workforce as a supervisor, it will be easy to incorporate the best workers into your production planning and implementing processes. Treat them as part of a team, give them some responsibilities that they can handle and which will make them feel as part of the production team. Do not give them too much responsibility because they might get frustrated. Introduce the principle of sharing of knowledge; make them aware that they learn when they share knowledge. It is very important that you are the first one to share your technical knowledge with the others to make them aware of the advantages.

Exercise 8:
Discuss the importance of proper machine setup in relation to joint accuracy in small groups.

3. 5. 0. Training and Development of Workers

You get some new workers into your department and you want to assign them to some jobs. What should you do?

- Interview them one by one about their background and work experience (take notes which you can use as your personnel file of a specific worker)
- Find out where they worked before and why they stopped working there
- Brief them about your companies / departments working policies
- Assign them to some jobs in their field of experience and observe them one by one
- Take notes about their performance
- Sit down again one on one and discuss the working results (safety, productivity, quality, housekeeping, proper use of equipment and tools)
- Assign them to tasks which they are able to accomplish

To further enhance the quality and productivity of the workers you have to conduct some training:

You can develop these workers either in **informal training**, meaning to say you train them within the production while you assign a job to them. This training has the advantage that you can take care of each worker by himself. On the other hand communication is not so easy because of the noise in the workshop. Mostly you will only have time to show him HOW something works but not WHY. When it comes to the next assignment you might have to start from zero again.

On the long run your staff development will be more efficient if you try to introduce some **formal training** to your department / company:

- Before you can actually start with a formal training, you should evaluate the workers strength's and weakness' in order to know WHAT you should teach them
- Try to classify them into maybe three different skills levels (Beginner, Advanced, Experienced) and make training plans according to these results
- Talk to the HRD department and the management about time and a room to conduct some of this formal training for the three different levels on a Saturday or as evening classes
- Do not put all workers into one class because the experienced ones will be bored and the beginners will be overcharged and can not follow your explanations
- Give them some basic theoretical background knowledge about woodworking so that they can follow your instructions later on much easier because they will understand WHY you need this saw blade or another (Make photocopies of some of the WTSC Training handouts)
- Accompany the theoretical lectures with some hands on practices in a quiet workshop
- Try to convince the HRD department to introduce a company internal grading and certification system. At the end of a "Circular Saw Training Module" the worker should undergo a hands on exam and if he passes should receive a certificate as a "Circular Saw Operator". This system should be accompanied as well by some financial incentives, workers who undergo these training and take them seriously should be paid a little bit higher than workers without the certificate. Try to convince somebody from the management to hand out the certificates to stress the importance of the program
- Make a Manpower Development Plan with HRD to send some workers to Skills Training Centers like WTSC, especially if you do not have time and facilities to conduct training in your own workshops
- Be serious about the training and explain it to your workers according to that. While courses are conducted, discipline, attendance and active participation should be valued very high

3. 6. 0. Maintain Workers Discipline and Productivity

After you trained your workers in the technical skills you will still encounter problems. Here the workers attitude towards his work is an important factor. Even if he is a very skilled craftsman, a worker can show a very bad overall performance because of his attitude towards work, being punctual, finishing work at the given deadline and so on.

3. 6. 1. Provisions by the Company to Strengthen Discipline and Productivity

But before we think about how to improve the workers attitude and discipline we should not forget about what the company should provide to create a proper working environment:

- A safe working space is important, in the machining section use fences and guides, build proper jigs, in the finishing section provide masks to keep the workers from inhaling fumes and dust.
- Proper lighting has to be provided, how can you expect a worker to work accurate if he can not see what he is doing?
- Is the workshop floor out of concrete and are you able to use trolleys for the workshop internal transport? (If you have to carry all the work pieces by hand, how much time will be wasted by doing so and how many pieces will be dropped and the machined edges spoiled?)
- How much is the company paying the workers and do they take care of SSS? Is the payment realistic and according to the workers capabilities? Do **not** tell your workers about commitment by the heart, they can **not** feed their children on it!!
- Is the workshop cleaned daily, as dust free as possible and are the machines maintained regularly by a mechanic?
- Are the tools organized in a tool room and are they kept sharp all the time?
- Does the company provide good quality raw materials or is it the cheapest Gemilina with lots of knots, pith, cracks…? Maybe more expensive material will turn out cheaper because you have less waste and less work in planing it?
- Does the company have rules and regulations for disciplinary action? Get to know them! Talk with the staff department about the problems of disciplinary action. If you have to apply them, treat all the workers the same, do not privilege old buddies!!!!
- Observe the workers on the machines and equipment while they are working on it. Think about jigs and fixtures to improve the quality and speed of their work! Sometimes small things can help speeding up the work very much! Involve the workers in the process of improving the for example the setup of the machine!
- Is there an existing production administration system implemented? Do you use Routing Sheets, Cutting Lists, Drawings, and Samples to speed up the production?

Check this list, partly you will find that it is your own responsibility to change and improve the situation, other aspects have to be discussed with the management before you can act on them. You are like a mediator between workers and management; you have to have good relationships with both parties!

Exercise 9:
Write down a list of improvements for your company.

3. 6. 2. Department Organization and Motivation of Workers

If you can implement all the things mentioned in the list above you will find that you have created a good basic environment of job motivation: the worker receives a good salary and his work situation allows him to work productive. Looking back to the beginning of the course we said that there are “Leaders” and “Followers” in every production line. Your manager identified you as a leader, now you have to do the same thing in your department! Try to figure out in individual talks WHY people work in your company. A lot of them are just working because they need some money to survive, but they do not have any ambitions in their “career”. It will be very hard for you to motivate them to take over more responsibility. If you are new in your position, identify the possible leaders who have some ambitions and start working with them firstly.

Create a production team and involve them actively in the planning and decision making. Give them some responsibilities in the production and you can concentrate more on the management of the production. It is a little bit like having your “own company”, now you are in the higher management and you have your own “group leaders” as supervisors supporting you in the day to day activities. Try to convince the management to accept your new department structure and some salary increases for the motivated group leaders. You have to be careful not to overburden your group leaders, in the end it is still you who has the final responsibility for the department. If you overburden them, they will get frustrated easily, so set realistic and attainable goals for the group leaders and the workers.

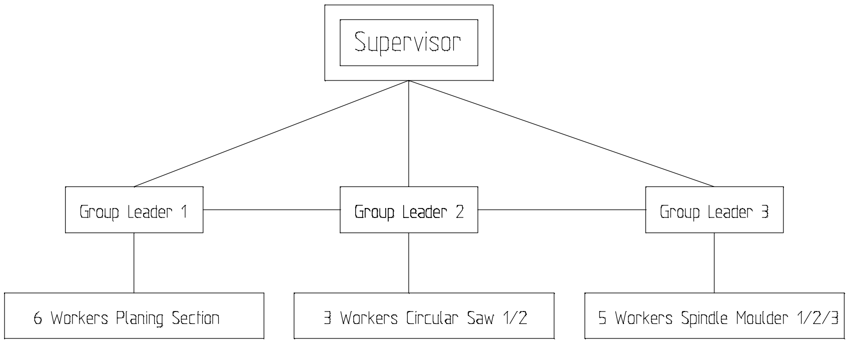

By creating such an internal department structure you can solve some of the problems related to motivation: By delegating work and responsibilities to your group leaders they feel treated as individuals and they can implement some of their ideas, in the end they feel that their work is meaningful.

- Try to work down with this system to the workers who do not have a lot of self motivation
- Try to get them involved in the system in small steps
- Make notes of their performance, set regular individual meetings to discuss their improvement or the lack of it
- You might have to give some of the guys a deadline, if they do not improve, talk to the staff department about laying-off some workers in order to replace them with more motivated ones
- If you see potential in a worker but he lacks certain skills, give him some individual attendance or send him to some training courses outside

3. 6. 3. Rules and Regulations and their Implementation

The "Rules and Regulations" of your company is a very important tool to keep up work discipline. Most probably the rules and regulations are existing but like with so many other things, are they really implemented?
When you start your job as a supervisor, get a copy of the rules and regulations and read them carefully! Go to the staff department and discuss the contents and the routines with the responsible managers. Sit down and “translate” them into terms the workers can easily understand. Conduct a meeting with the workers and explain the rules and the consequences of possible misbehavior.
Give them examples: How much money does it cost the company if 50 workers come 30 minutes late 20 days a month at an average salary of 150 Peso/day?
8 hours x 60 minutes = 480 minutes a day 150 Peso / 480 minutes = 0.3 Peso / minute
0.3 Peso / minute x 30 minutes late x 20 days / month x 50 workers = **9000 Pesos / month**
Apart from that the productivity is lower because they are only 450 minutes on their work place instead of 480, only 94 % instead of 100 %.
Clarify with the workers that once they sign the working contract with the company, both parties agree to certain terms, which should be binding for both parties.

Clearly state in front of the workers that you will make no exceptions when it comes to disciplinary action, you have to treat all the workers equal, whether you like one personally or not.

3. 6. 4. Implementing Disciplinary Action

Check with the staff department on implementation guidelines and forms for disciplinary action. Keep written proof of misbehavior! Ask the worker for a one on one discussion and:

- Describe the performance problems and review past discussions and reminders
- Ask for reasons for the situation and listen openly to the employee's response (do not get involved too deeply into personal problems because you will loose your objective position and your judgement will be spoiled!)
- Indicate what kind of disciplinary action you must take, and explain why
- Discuss and agree on ways to improve the workers performance and set a follow - up date
- Ask the employee to summarize the discussion in order to find out whether he takes the situation seriously and whether he understood the problems
- Indicate your confidence in the employee's ability to improve and give hints on how to do so!

Like mentioned before your role as a supervisor is to be a mediator between the workforce and the management! You have to try to stay objective. Leave personal emotions out of a meeting like that! You have to learn to live with the problem that suddenly some of the workers are **not** your friends anymore!

Exercise 10:
Discuss the following situation: You caught some workers drinking Tanduay in the lunch break and the rules and regulations of your company state clearly: No alcohol on the job!!
What do you do?
What do you think happens if one of the workers will cut his hand off on the circular saw because he was drunk and you did not report him?

3. 7. 0. Department Administration

If you read these handouts carefully you will realize that you are not only a leader now, but a "pencil pusher" as well. Before all your work was physical but now you have to take written notes all the time; conduct meetings were you have to give written reports and suggestions!
All this writing helps you to administer your department, you can not memorize all the information any more which is given to you and which you want to give to others! We mentioned already the paperwork, which you have to do to administer your department well. Do you have a desk and a shelve where you can store all the information? If not, go to the management and ask them for a quiet spot or even a small office space close to your production area where you can put these administration tools! As a worker you can **not** work without a saw, so as a supervisor you can **not** work without a desk!

4. 0. SUMMARY

To sum up all the responsibilities and abilities a supervisor has in his day to day work we can say that he has to "manage resources". These resources can be of very different nature:

- Machines and equipment
- Energy and utilities
- Materials and supplies
- Human Resources
- Information
- Money

The most important resource the supervisor has to deal with is the human resource. Every human being is different in character, attitude, experience in private and work life, so you have to treat them all as individuals.

On the other hand you are a representative of the management as well, so you have to be very careful in taking sides in any discussions with the workers. You can see that it is not an easy job to be on one hand considerate with all the individual characters and on the other hand you are supposed to treat them all the same!

You have to learn to think before you talk and act because you are a:

MEDIATOR / ORGANIZER / INTERPRETER

BETWEEN

WORKFORCE **AND** **MANAGEMENT**

5. 0. 0. Daily Sequence of Work Activities for a Production Supervisor

5. 1. 0. Before Start of Shift (15 – 30 minutes)

- Check production schedule and/or work orders for the day
- Check equipment to be used
- Check supply of materials for the day
- Check tools needed for the day
- Line up equipment, materials, and tools for the day
- Line up firm work schedule for the day

5. 2. 0. Beginning of the Shift (15 – 30 minutes)

- Check attendance and assign employees to work stations, get support from your "group leaders"
- If necessary (because of absences), balance the work force by changing assignments or by securing additional help from other departments (discuss with management)
- Assign production and/or work orders
- Stress critical qualities to watch
- Specify when the work should be completed

5. 3. 0. During the Shift (6 – 7 hours)

- Check workmanship with each employees, approve, correct, instruct or train as needed
- Check work progress with each employee. Add help, allow more time, or assign additional work
- Check housekeeping, this is a continuos process! Good work cannot be done in an untidy place!
- Check back when production or quality appears unsatisfactory, especially with new employees
- Stay on the shop floor supervising and/or available for questions, assistance, and instructions most of the time
- Be on the floor immediately before and after breaks and for 15 minutes before quitting time
- Inspect critical quality areas as work progresses. Correct problems as soon as they are detected
- Perform final inspection of parts, subassemblies, and so on, before they move to next department (if possible, get group leaders involved)
- Check/Report/Conduct a study on recurring quality problems
- Check periodically to see that materials and supplies are on hand
- Check periodically to see that tools and equipment are in proper operating condition
- Report material shortages or recurring defects
- Report and/or request maintenance, repair, or replacement of defective tools or equipment

5. 4. 0. Once a Day

- Observe one employee or work station continuously for 15 minutes
- Look for time wasted, dull or improper tools, need for work positioning jigs and fixtures, interference, delays and bottlenecks, and expenditure of excessive time to get parts and materials. Do find ways to cut costs or make improvements in any of these

5. 5. 0. End of Shift (15 minutes)

- Make a list of unsolved problems that came up during the day. Consider ways to handle them
- Think about jobs that have to be done the following day / shift like checking production and/or work orders, materials and tools
- Complete all paperwork. Avoid holding any paperwork for the following day.
- Make a list of jobs that must be done the next day. Take it home with you and complete it before coming to work. Use this form to make your own daily plan!

The Four Step Method

1. ***Step:*** **Preparation of student**

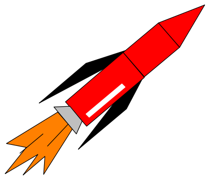

2. ***Step:*** **Demonstration and explanation**

3. ***Step:*** **Student activity**

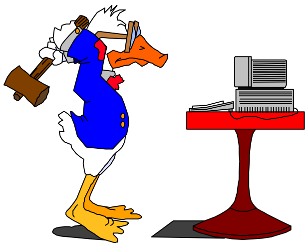

4. ***Step:*** **Exercising and strengthening**

1.Step: Preparation of Student

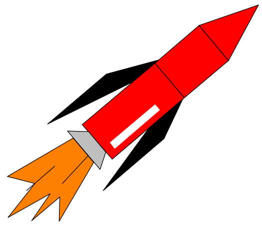

➔ **take the shyness**

➔ **motivate**

➔ **show the objectives and tasks**

➔ **evaluate the knowledge**

➔ **familiarize with the workingplace**

➔ **give advices concerning safety**

<u>2.Step: Demonstration and Explanation</u>

- **place the student so that he is standing in the same direction to the workpiece than you.**

- **demonstrate the <u>whole</u> procedure in original time.**

- **in case of complicate procedures devide them into modules and teach them step by step.**

- **repeat the demonstration and make the single steps visible.**

- **say <u>what</u> you are doing, <u>how</u> and <u>why</u> you are doing it in that way.**

- **give the opportunity to ask questions.**

<u>3. Step: Student Activity</u>

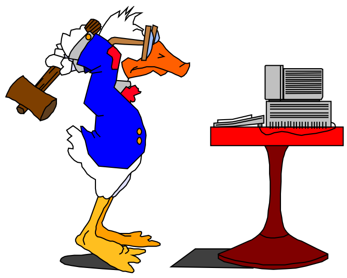

➔ enhance the student to try it on his/her own.

➔ don’t interrupt the student in his/her first attempts.

➔ make comments on serious mistakes.

➔ precision is more important than speed.

➔ let the student say <u>what</u> he/she is doing, <u>how</u> and <u>why.</u>

4. Step: Exercising and Strengthening

- ➔ give enough time to exercise.

- ➔ acknowledge progress.

- ➔ control that no mistakes are done during exercising.

- ➔ change conditions of exercising.

- ➔ slowy adapt to real working conditions.

TWO-WAY COMMUNCATION

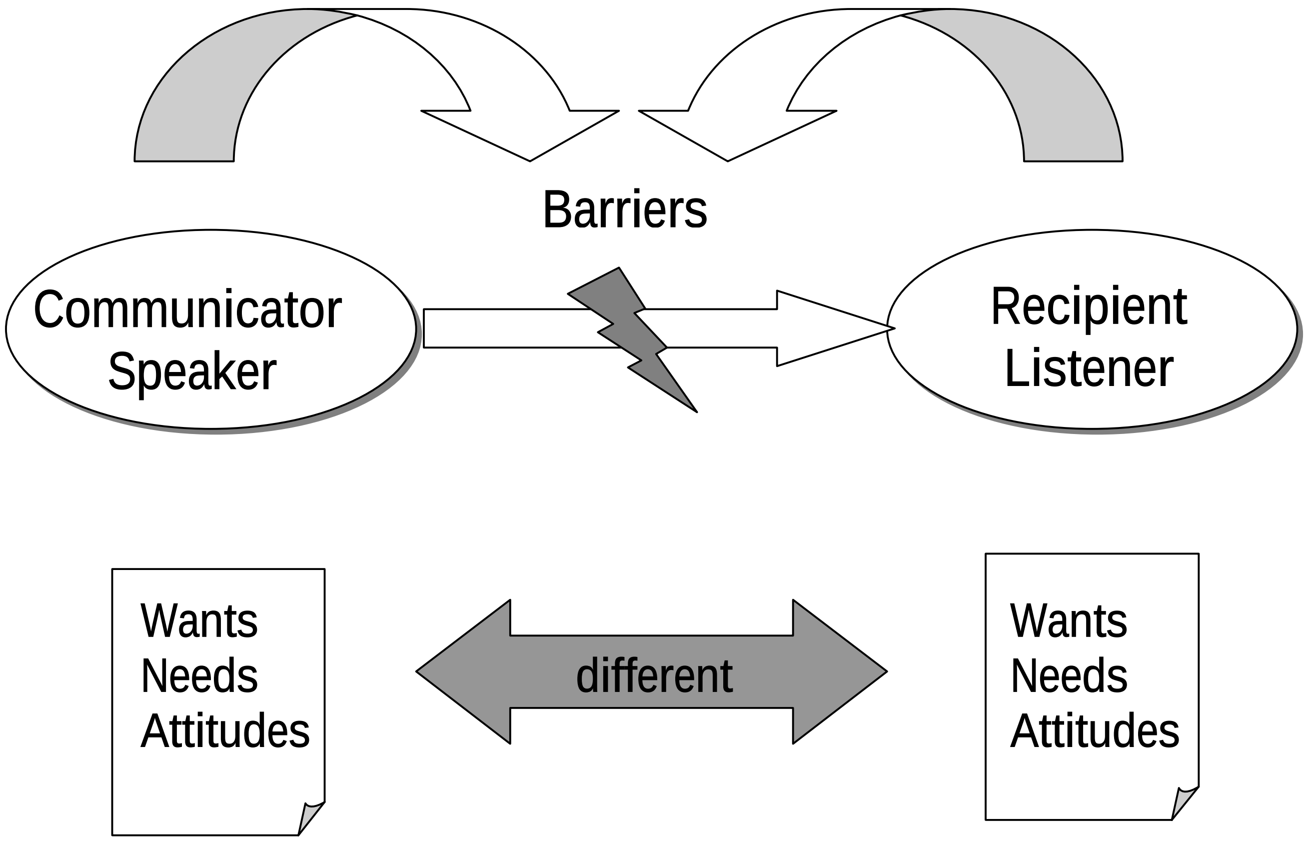

- Maintaining eye contact
- Listening to what the other person is saying
- Mirroring body language

The **three rules** that govern good communication are all **associated with clarity**:

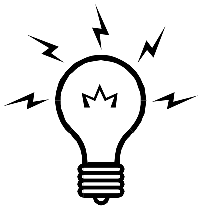

- Be clear in your own mind about what you want to say
- Deliver the message properly
- Ensure that the message has been correctly understood

Good communication means
saying what you mean –
and fully comprehending any feedback.

The **three rules** that govern good communication are all **associated with clarity**:

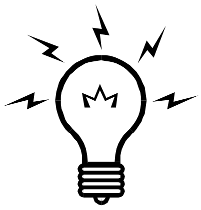

- Be clear in your own mind about what you want to say
- Deliver the message properly
- Ensure that the message has been correctly understood

Good communication means saying what you mean – and fully comprehending any feedback.

Type of Listening
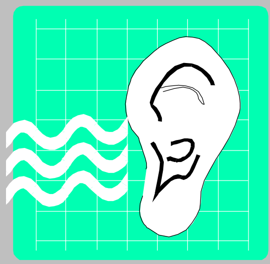
<u>EMPATHIZING</u> Drawing out the speaker and getting information in a supportive, helpful way.
<u>ANALYZING</u> Seeking concrete information and trying to disentangle fact from emotion.
<u>SYNTHESIZING</u> Proactively guiding the exchange towards an objective.

GIVING FEEDBACK

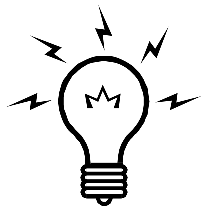

- Show an understanding of exactly what went wrong and why.
- Draw out ways in which poor performance or behaviour can improve.
- Use questioning to let the staff member know what you think and why.
- Aim to express your negative opinions honestly, but in a positive manner.
- Above all, take negative feedback away from the emotional zone by being objective, not personal.

Questions to ask yourself

?

- ☐ Am I devoting enough time and resources to strategic planning and overall monitoring?
- ☐ Is my desk overflowing with uncompleted tasks?
- ☐ Am I delegating routine but necessary tasks to staff?
- ☐ Is staff training given priority to ensure effective skills for future delegation plans?

Questions to ask yourself

?

- ☐ Can I learn from the way my own boss delegates to me?
- ☐ Why should it upset me if a subordinate performs part of my job brilliantly?
- ☐ How much spare work capacity is there in my unit?

Questions to ask yourself

?

- ☐ Is the task suitable for delegation?
- ☐ Is the delegate competent to perform the task?
- ☐ Will I brief them fully and correctly?
- ☐ Will I give them all the right backup, authority, and resources?
- ☐ How much spare work capacity is there in my unit?

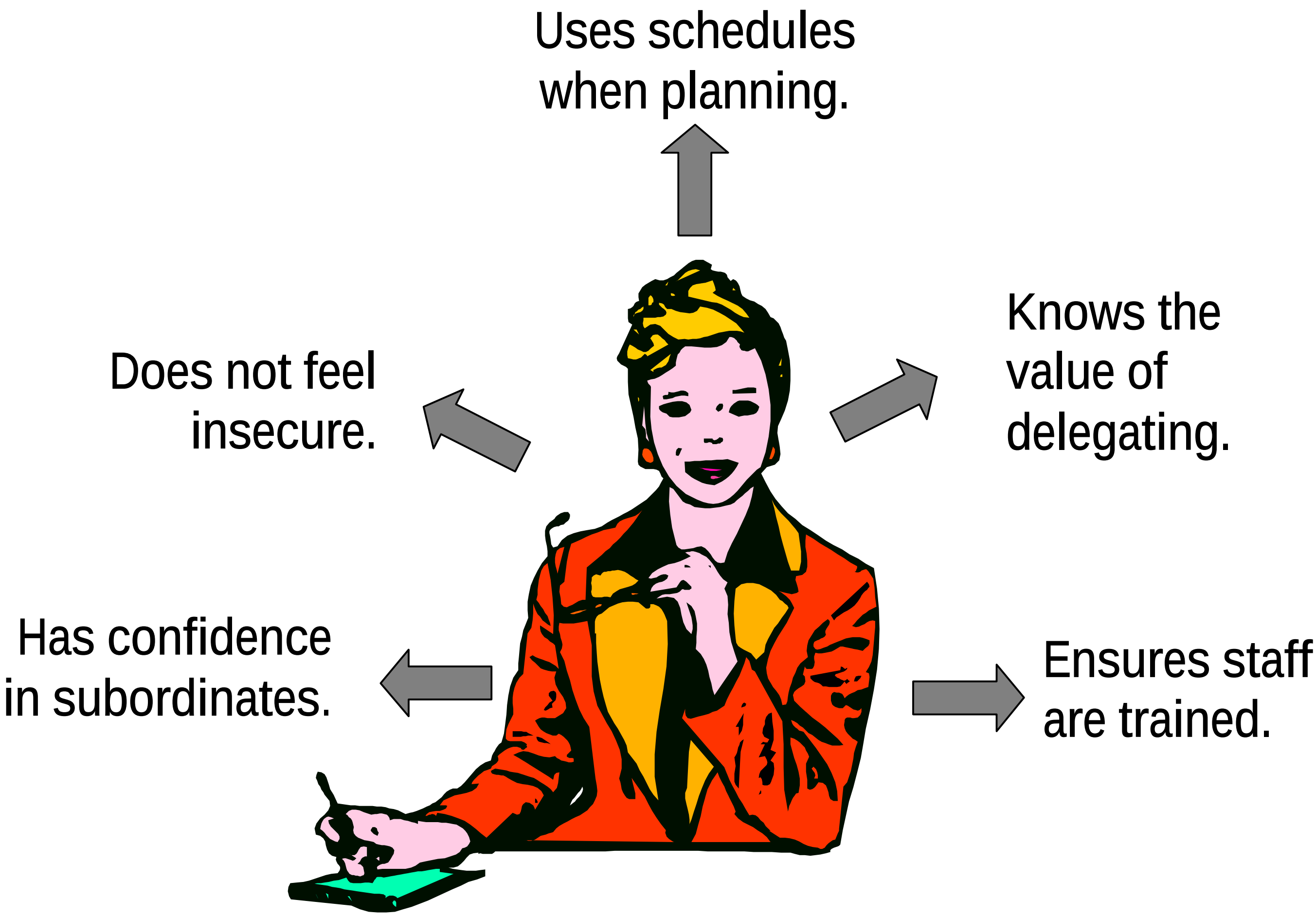

THE EFFECTIVE DELEGATOR

Keep always in mind

!

Repetition of the same error is inexcusable, since it shows failure to learn from mistakes

Selecting tasks

1. Keep a detailed time log (2 weeks)
2. Note all activities (tasks)
3. Note the time they take
4. Divide the tasks in 3 groups

What task am I doing that need not to be done?	Do not complete them yourself or delegate them.
What am I doing that could be done by somebody else?	Delegate these tasks to subordinates.
What task am I doing that can only be done by me?	You cannot delegate these, so prioritize them

Planning a structure

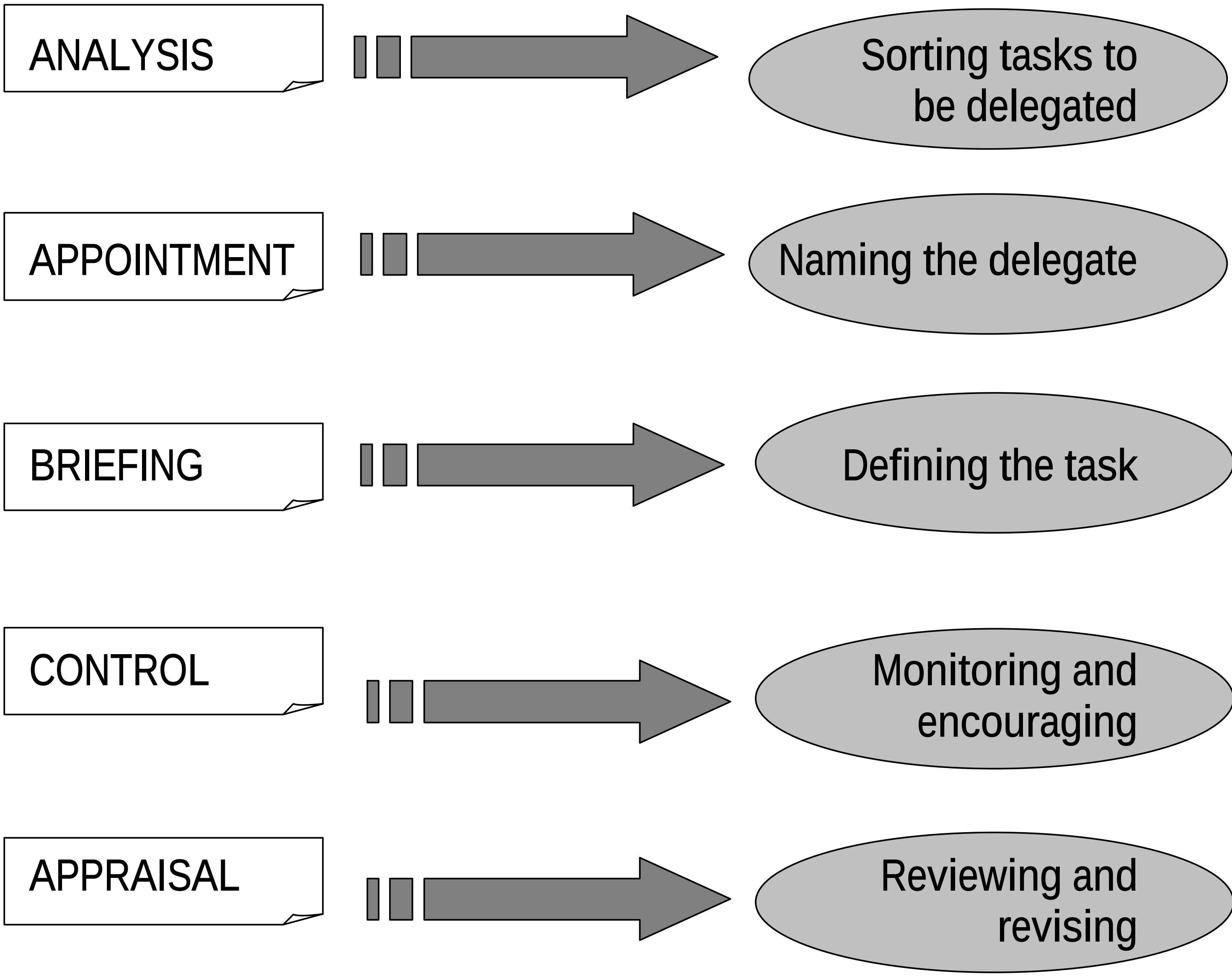

Checklist for avoiding dublication

KEY ACTIVITIES						
No. 01						
No. 02						
No. 03						
No. 04						
No. 05						
No. 06						
No. 07						
No. 08						
No. 09						
	Peter	John	Mary	Dodong	June	Name 6
	Names of those with delegated resposibilities					

APPOINTING SUB-LEADERS

Supervisor

Group Leader 1 Group Leader 2 Group
Leader 3

Six Workers Three Workers Five
Workers
Planing Section Circular Saw 1/2 Spindle
Moulder 1/2/3

Things to do for a good briefing

- ☐ Keep objectives as clear and concise as possible.
- ☐ Build a certain amount of flexibility into the brief.
- ☐ Base the objectives on requires outcomes.
- ☐ Make a checklist to avoid overlaps and omissions.
- ☐ Ensure that the delegate is fully aware of the aims.
- ☐ Allow the delegate to comment on the brief.

Structuring a brief

OBJECTIVES Defines the task, listing the major objectives and sub-objectives in clear and concise language.
RESOURCES Specifies what personnel, finance, and facilities are available or need to be obtained.
TIMESCALE Sets out the schedule with review points, stage completion dates, and final deadlines.
METHOD Describes procedures, as agreed with the delegate, and summarizes the key points.
LEVELS OF AUTHORITY Specifies the range of the delegate's authority and to whom they will report.

DO'S and DONT'S in Delegating

DO'S
▪ Do encourage all delegates to make their own decisions. ▪ Do move from hands-on to hands-off as soon as possible. ▪ Do intervene when absolutely necessary, but only at that time. ▪ Do ask delegates if they feel thoroughly prepared for their task.

DONT'S
▪ Don't say or hint that you doubt the delegate's ability. ▪ Don't miss any stage in the briefing process. ▪ Don't place seniority above ability. ▪ Don't deny a delegate the chance to learn by interfering to much. ▪ Don't take back a task without a good reason.

Questions to ask yourself

?

- ☐ Was I too hasty in making the appointment?
- ☐ Is there somebody available who would do better?
- ☐ How can I prevent this problem from recurring?
- ☐ What would I do differently if I could start again?
- ☐ What are the delegate's strength and weaknesses?

Questions to ask yourself

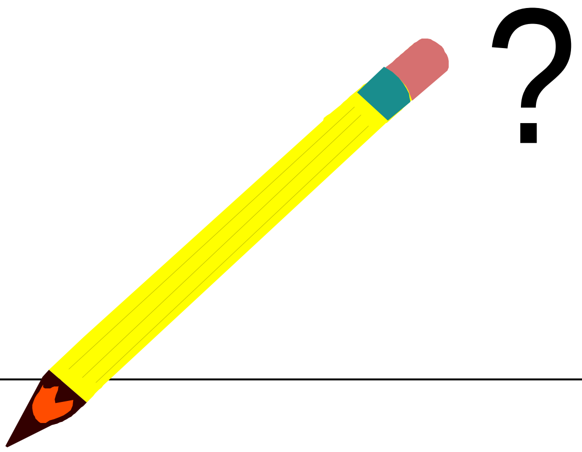

- ☐ What is the meeting for?
- ☐ Why is it being called?
- ☐ How will I know if it has been successful?
- ☐ Who should attend?

Workplace Motivators

MOTIVATORS
ACHIEVEMENT The urge to achieve is a basic human drive. Is a great source of satisfaction.
RECOGNITION Enhance self-esteem. May be reviewed as a reward itself.
JOB INTEREST Responsibilities should be matched to individuals' interest.
RESPONSIBILITY Opportunity to exercise authority and self-direction.
ADVANCEMENT Promotion, progress and rising rewards. Feeling that advancement is possible.

<u>Management Styles</u>

THEORY X

- ☐ If I did not drive my people constantly, they would not get on with their work.
- ☐ I sometimes have to fire somebody or tongue-lash them to encourage others.
- ☐ Leaders have to lead by taking all key decisions themselves.
- ☐ I find that most people are unambitious and must be forced to raise their sights.
- ☐ I keep my distance from the team since it is necessary for effective command.

Management Styles

THEORY Y

- ☐ If somebody falls down on the job, I first ask myself what I did wrong.
- ☐ I should sometimes take a back seat at meetings and let others take the lead.
- ☐ If I ask someone for their opinion on an issue, I try to do as they suggest.
- ☐ People should appraise their bosses as well as be appraised by them.
- ☐ Anyone can have creative, innovative ideas if they are encouraged.

Keep always in mind

!

Establish a system that is constructive

– not obstructive –

in which people can hope to perform at their best.

Keep always in mind

!

Repetition of the same error is inexcusable, since it shows failure to learn from mistakes

Questions to ask yourself

?

- ☐ What precisely went wrong, when and where?
- ☐ What were the root causes of the failures?
- ☐ When were the deviations first signaled?
- ☐ Why were the warning signals not acted upon?
- ☐ What could have prevented the failures from occuring?

SOLVING PROBLEMS WITHOUT ATTRIBUTING BLAME

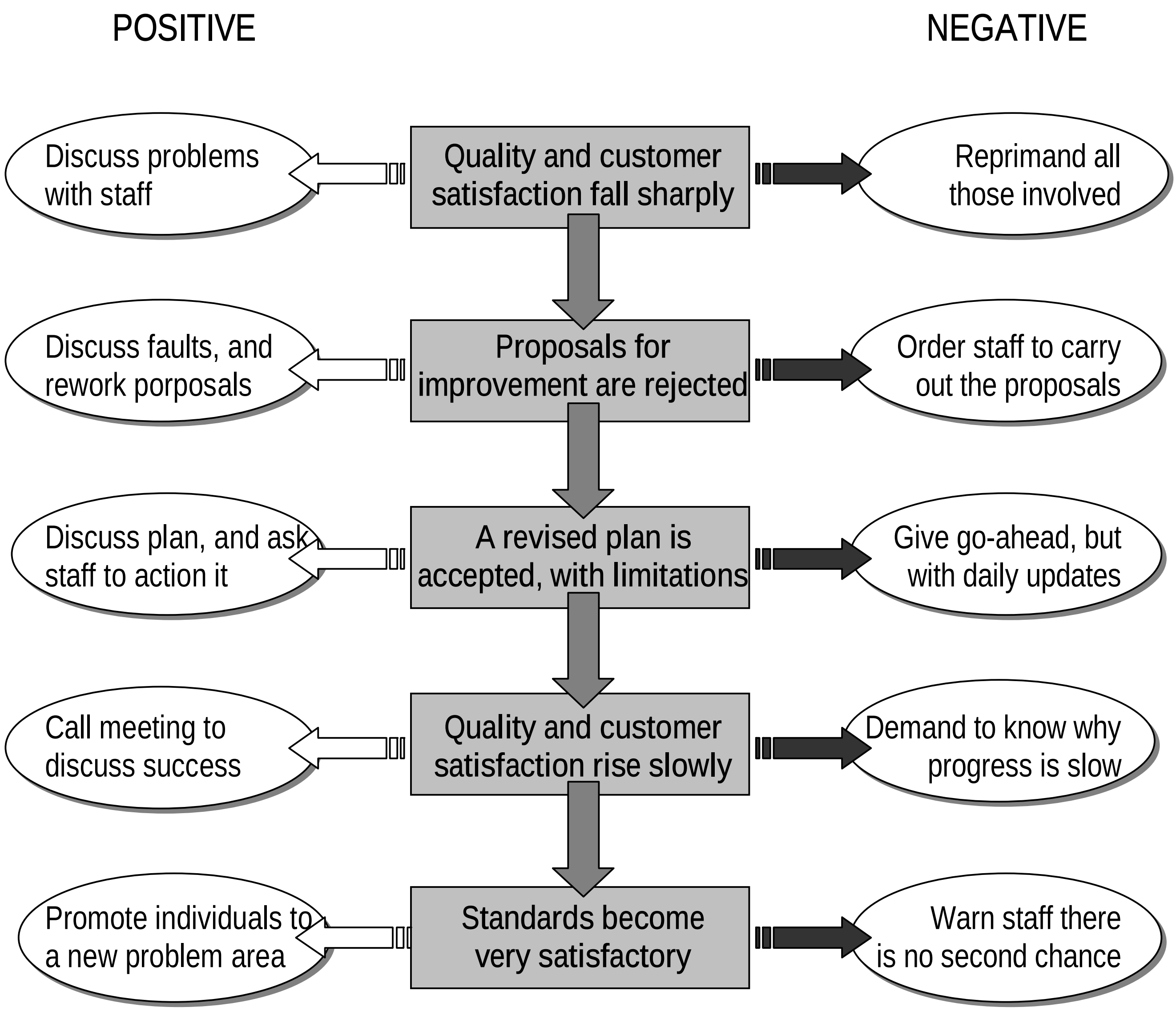

Disciplinary Action

- Set one-to-one Meeting
- Describe performance problems.
- Review past discussions.
- Ask for reasons for the situation.
- Listen openly to the employee's response.
- Indicate what kind of disciplinary action you must take.
- Explain why.
- Discuss and agree on ways to improve the workers performance.
- Set a follow-up appointment.
- Ask the employee to summarize the discussion.
- Indicate your confidence in the employee's ability to improve.

Composition of a Price

Solid timber: Mahagoni
Finish: Matt Finish
Gross amount: 156,080.00 Pesos

Cost of Sales: 100% (122,800 Pesos)

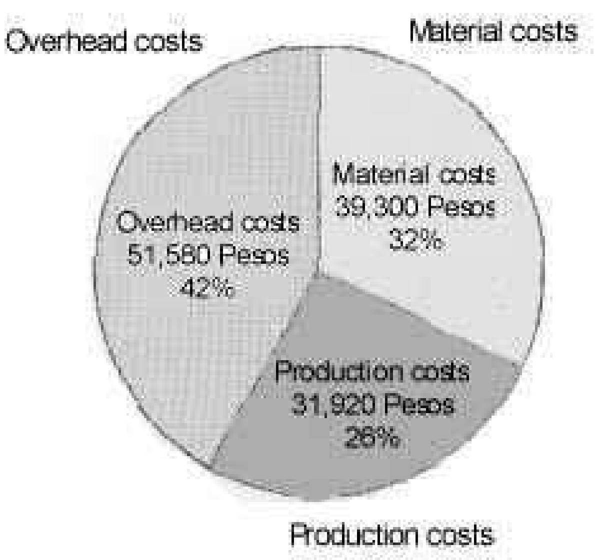

Material costs 39,300 Pesos 32%	Chipboard Solid timber Veneer Plywood Glue, screws Hinges Laquer, etc.
Production costs 31,920 Pesos 26%	Machine rates Operator rates
Overhead costs cost 51,580 Pesos 42%	Taxes Insurances Administration Rents Electricity Maintenance Repairs Depreciation Interest, etc.
Margin 13,540 Pesos 11% investments	Rate to cover risks and for further
VAT tax 20,460 Pesos 15%	Value added

SELLING PRICE (Gross amount)

Example for a Technical Drawing

Technical drawing for an entrance door

All measurements in mm

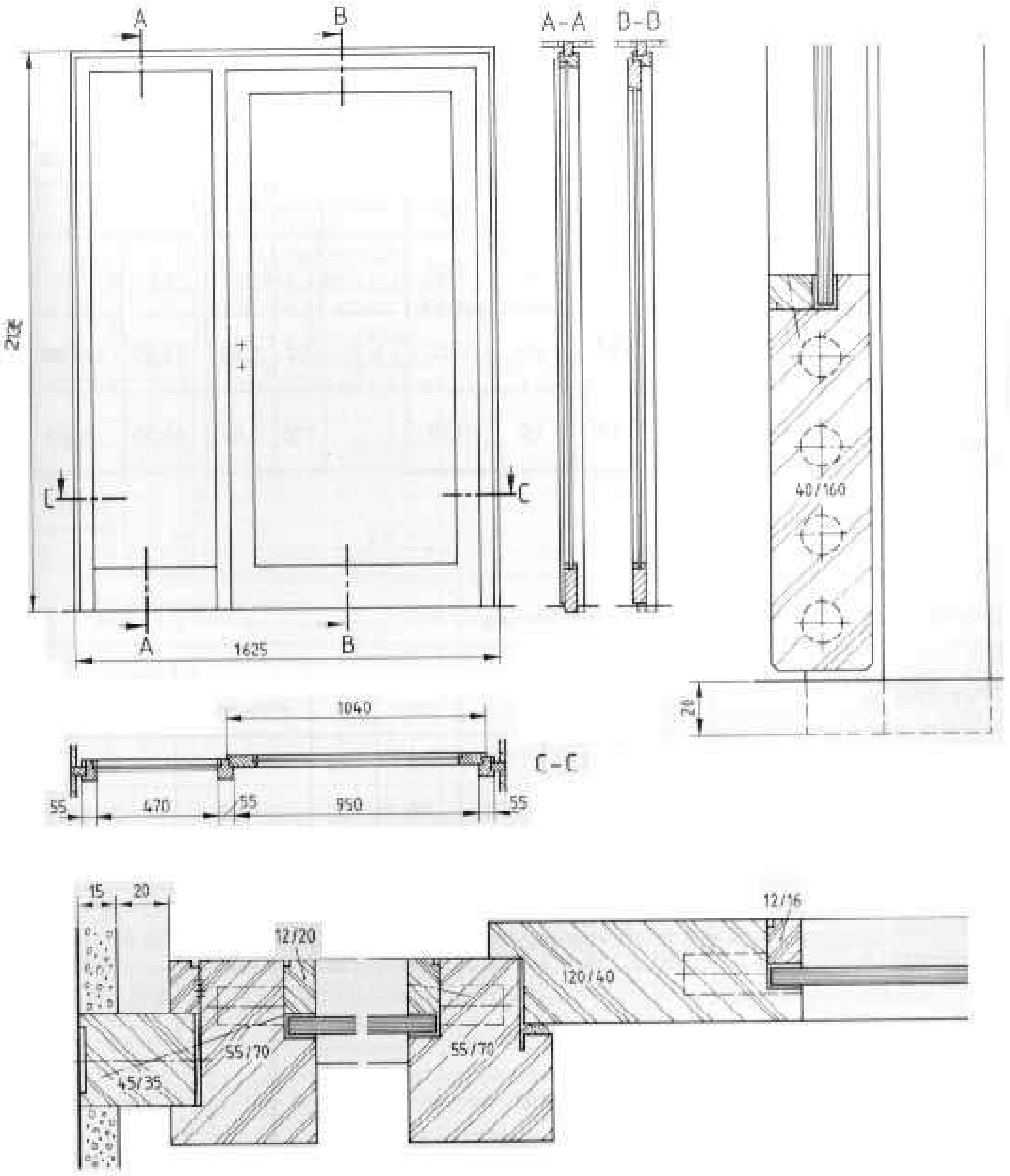


```
Overall measurment: 1625 x 2135 mm
Solid timber:       Philippine Mahagoni
Finish:             Polyurethan laquer, glossy
Joints:             Dowel
Glass:              Security glass, 12 mm
```

Form for a Cutting List

Part No.	Part Name	Material Used	Rough Dimensions			Final Dimensions			No. of Pieces	Cost / Unit	Material Cost
			Length	Width	Thickn.	Length	Width	Thickn.			
									Total Cost:		

Form for a Routing Sheet

Company Name	ORDER ID
ROUTING SHEET FOR: (Part Name)	

CUSTOMER		LENGTH ROUGH/FINAL		
ORDER ITEM		THICKNESS		
ORDER QTY		WIDTH		
MATERIAL				
NO. OF PIECES		DRAWING NO.		

Process No.	Equip-ment used	Process Description	Time (min)	Setup Time (min)	Jigma-king (min)	Worker ID	Date	Addit. Worker	Actual Time Needed	Qty. Bal.	Worker Sign.
1											
2											
3											
4											
5											
6											
7											
8											
9											
10											
11											
12											
13											
14											
15											
16											
17											
		TOTAL:									

Form for a Calculation Sheet

Company Name				ORDER ID	
PRECALCULATION SHEET	for Item:				
Customer:				Material:	
Adress:				Drawing No:	
				Quantity:	
Material Costs					
Material Overhead		%			
(Plus)					
Production Costs	Prod.	Mach.	Worker	Mach . Rate	
(Machine/Section)	(hrs.)	Rate	Rate	incl. Wages	
(Equals)					
Total Production Costs					
(Plus)					
Administration Overh.		%			
Sales Overheads		%			
Product Developm. Overh.		%			
(Equals)					
Total Costs					
(Plus)					
Mark up		**%**	(Total Cost / ((100 - Mark Up)*.01))		
(Equals)					
Retail Price					
Profit		Peso			

CHARACTERISTICS OF A GOOD JOB

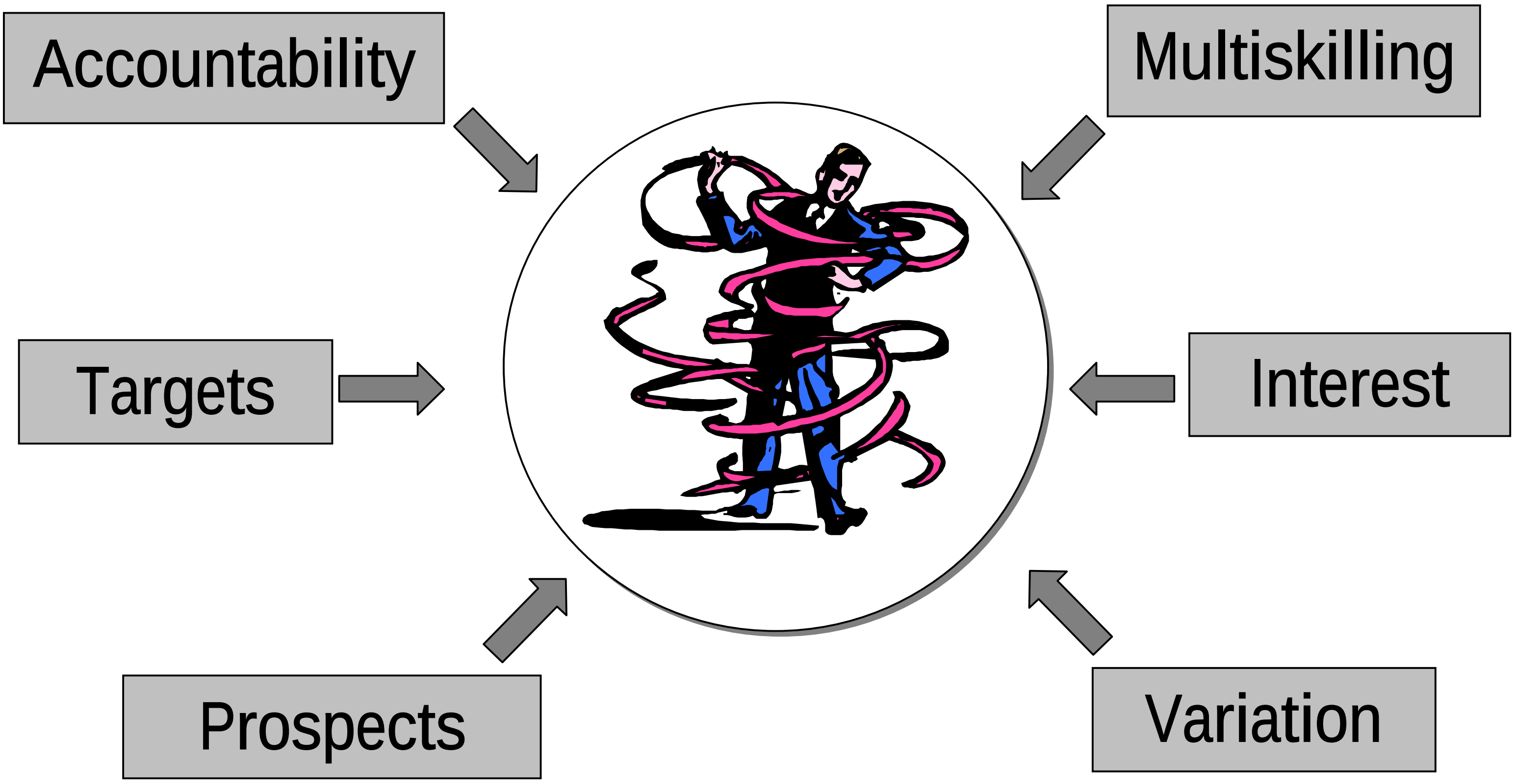

How to break down a working process

Scheme of a work analysis			
Workprocess: Tools required:			
No.:	Work Steps WHAT?	Explanation of process HOW?	Reasons WHY?
01.			
02.			
03.			
04.			
05.			
06.			
07.			
0.8			

Questions to ask your staff

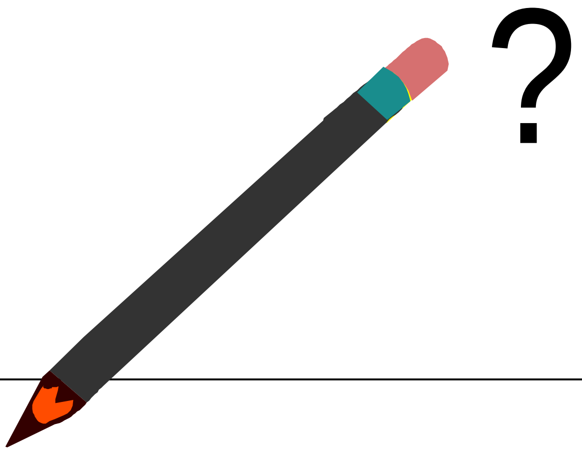

- ☐ Can I do anything to help you to perform better?
- ☐ Am I doing anything that hinders your performance?
- ☐ What do you see as your strengths and weaknesses?
- ☐ Have you any ideas about how you can improve yourself?
- ☐ How could your job or the system be improved?

Non-financial rewards

REWARD	FACTS TO CONSIDER
RECOGNITION Handwritten note, engraved trophy	Reward that is personal as well as being effective in both the short and the long term.
GIFTS AND PRIVILEGES Holidays, sports facilities, merchandise	Immediate, and stimulating in the short term. May not meet long-term motivational needs.
SPECIAL EVENTS Weekends away, parties, gatherings	Involve staff from all levels. Can stimulate, relax, bond, and motivate staff.
PROFESSIONAL TRAINING On- or off-site courses	Effective, focused training brings high returns. Company gains a qualified employee, who feels valued.
SELF-DEVELOPMENT Personal, non-vocational training	Very high motivational value. Enhancing self-image raises performance level at work.
EQUIPMENT Company car, lap-top	Expensive equipment is highly motivational. Need to ensure that equipment is fully utilized.

Financial rewards

REWARD	FACTS TO CONSIDER
SALARY INCREASES Increases in basic rate of pay	
COMMISSIONS AND BONUSES One-off payments linked to targets	
PERFORMANCE RELATED PAY Regular wage increases based on target-linked performance	
SHARES/STOCK OPTIONS Gifts of shares, or the chance to buy shares at a fraction of actual value	
SPECIAL RATES Help with mortgage/rent, insurance, and other items.	
FAMILY HEALTH BENEFITS Paid or subsidized schemes offering privat family health care	

How to make your production faster:

- Training of workers
- Better machines and equipment
- Use of jigs
- Identify bottleneck in the production
- Allocate materials for each order right in time
- Reduce set-up times

The idea of KAIZEN

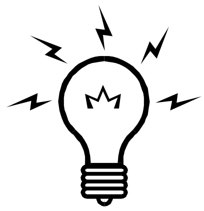

- ➔ "In its broadest sense, quality is anything that can be improved."

- ➔ "There is always a better way."

- ➔ "There is no acceptable best way."

The management should provide you with:

- ☐ Technical drawing of the item
  (or a sample)
- ☐ Specification of material, hardware and the quality standard (or a sample)
- ☐ Quantity of items that should be produced
- ☐ Machine rates for each machine in the workshop
- ☐ Operator rates (if they are not included in the machine rates)
- ☐ Material prices

Determination of time

➔ Define the different steps of work to be done in the correct order.

➔ Fix the appropriate machines you want to use.

➔ Determine the amount of work (number of pieces, m^2, etc.).

➔ Consider the time for the machine set-up.

➔ Compute the time for each working process based on your experience.

➔ Add a percentage for transportation inside the workshop.

Table of Contents

Supervisory Development Program

A seminar for improving supervisors skills

Before we start talking about supervisors and supervision we should have a proper definition for this word. One way is having a look in the dictionary:

The dictionary defines supervision
in the following words:
"the act of supervising, the authority to direct or supervise".
It comes from the Latin ***supervidere***.
Super signifying "**over**" and *videre* meaning "**see**".

Supervision as a management function refers to the act of keeping a close eye on the work of workers and employees in the performance of the jobs assigned to them. Thus, the individual who is in charge with this function and responsibility is generally called a supervisor. Supervision is the process of **"looking over their shoulder"** to see that things are operating correctly.

This seminar is desined to help you to better understand the tasks and responsibilities of a supervisor and give you ideas how to improve your supervisory skills.

Hopefully the outcome of the seminar will enable you to transfer your new knowledge into your company and thus enhance the productivity and quality.

Sabine Schacknat

1.0 Particulars about Supervision

Just imagine:

Until a few weeks ago you were a normal worker in the production line and you received your orders from your boss or a supervisor. They gave you instructions of what to do and how do to it and you were doing it. Two weeks ago the production manager of your company talked to you and offered you a job to be a supervisor yourself. You happily agreed because it means some Pesos more every day and you do not have to do all the dirty work yourself anymore.

Last Monday you started your new assignment and you suddenly realize that this new job is not so easy after all. Before you had to deal only with the work itself but now you have to tell other people what they have to do!

Think about the problems you suddenly have to deal with:

- ➔ Machines are not adjusted properly
- ➔ Dimensions of the product are not accurate
- ➔ Wrong tools are used for the job
- ➔ Wrong materials have been used
- ➔ Accidents are happening
- ➔ Products are not finished in time
- ➔ The quality of the product is not good
- ➔ Jobs take too long to be finished
- ➔ Your former buddies in the production line don't want to have a beer with you after work!

You wonder what is going wrong because you actually thought that you were a skilled wood worker!

Actually there is a **big difference** between the two jobs and you have to recognize what these differences are.

And you have to **learn some new skills** before you are really able to do your new job properly.

2.0 Organizational Structure and Responsibilities

2.1 Organizational Structure in a company

Let us have a look at the organizational structure of a company to get an idea of what changed in the work life if you change from a worker to a supervisor. In the picture you can see a rough layout of a company's structure. Now, you moved up from the workforce into your new position as a supervisor and that means that you moved up from being a **"Follower"** to being a **"Leader".**

As a follower you received your orders from the supervisor or the middle management and you were following these orders. Sometimes they would ask you for a statement about some problems and you had to report to them.

Your main task was to function as a worker and to do what you were told. The skills you had to provide were mainly technical, on how to run a machine and to use tools. Most of the labor was physical, like planing a piece of wood, the dimensions of the final product were given to you and you had to do it according to the order.

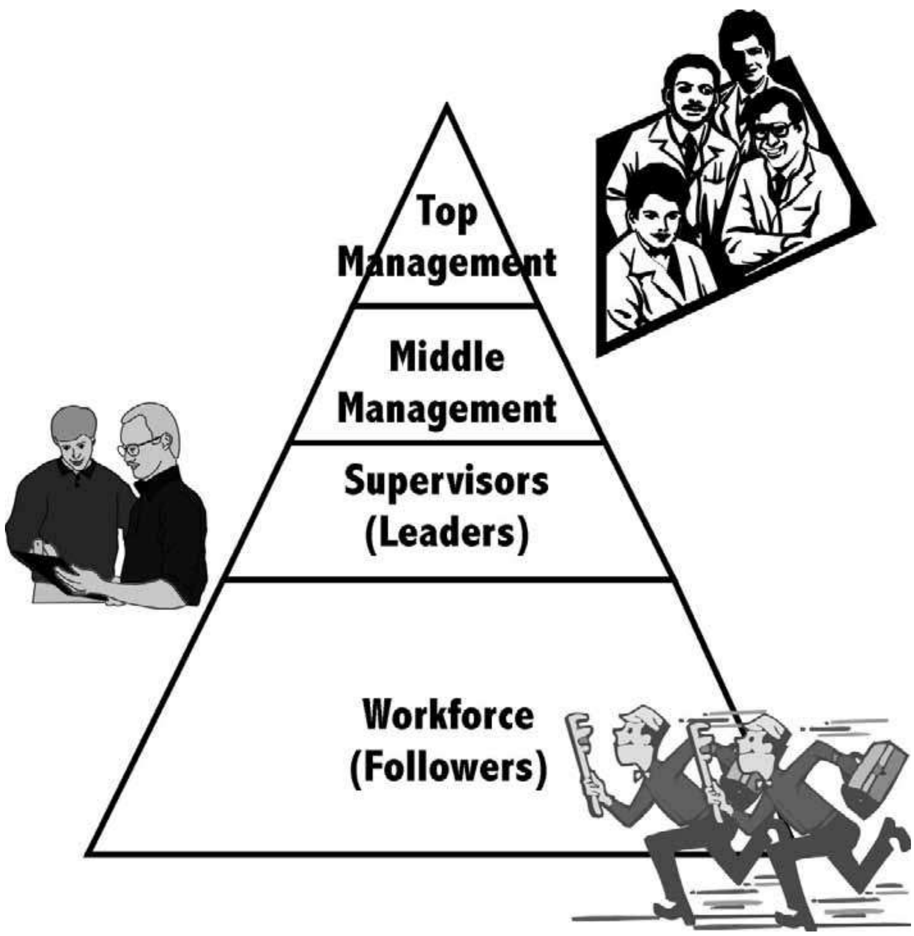

In the new position as a supervisor you will find a completely different situation to handle:

You have to receive orders from the management and give reports to them.

and

You have to give orders to the workers and receive reports from them.

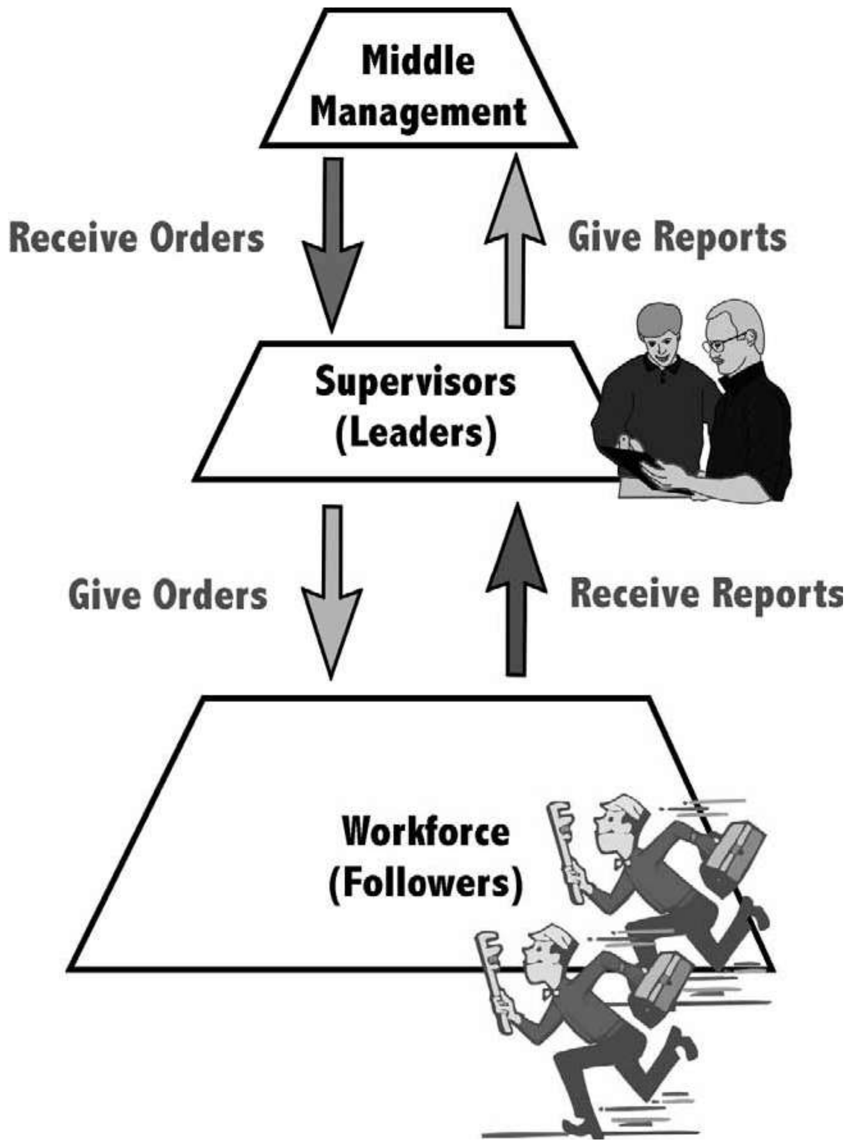

Now it should be easy to understand that most of your work as a supervisor will be more mental and not so much physical.

1.2 Responsibilities

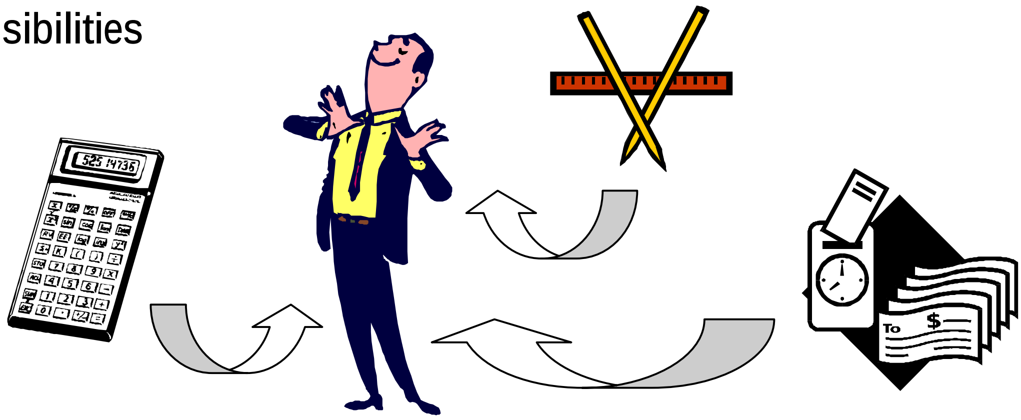

If we have a closer look at the organizational structure we can see that a supervisor has a lot of different responsibilities in his work life:

1.2.1. Responsibility to the Middle and Top Management

The management is expecting from a supervisor to do a lot of things in the department or section. They want to be able to rely on him when it comes to the planning of the work in the section and the coordination of work with other sections *(Example: You are the supervisor in the assembly, so you have to report problems to the management regarding the supply of parts from the machining section).* The supervisor has to be able to train and select employees for specific jobs. It is very important that he is able to communicate with the workers so that they do understand their work assignments.

To maintain work discipline and morale in the section he needs to have a natural authority which has to be based on knowledge and skills. To make the section an efficient one he has to make production decisions such as:

➔ *Which job has priority?*
➔ *When do we start with the next order?*
➔ *Which worker will be assigned at which machine?*
➔ *Will the machine work more efficient if you assign two workers?*

At the same time the management expects from the supervisor that he will maintain a proper cost control *(Material waste, proper production flow, unproductive workers).* In order to improve the productivity of the section the management expects written comments and suggestions about the situation.

1.2.2 Responsibility to the Workers of the Department

The workers in the section are the ones who will do the actual jobs like machining, assembly and so on. To achieve a high quality and In Time production the supervisor has to rely on his workers. A good working morale is a very important factor, the supervisor has to get to know the special skills of his workers in order to assign them to the right jobs and explain all the matters connected to this assignments *(special jigs, deadline, tools to use)*. If necessary he has to instruct and train workers for special jobs.

The target is to create a trusting working climate were the workers will be able to talk openly about problems in meetings. The treatment of all workers has to be equally. The workers problems have to be handled correctly, a good relationship with the personnel / staff department has to be established because they can help in all sorts of explanations and problems like workers payment and benefits. Sometimes the supervisor might have to take over the role of a counselor but he has to be careful that he does not get involved personally into the problems, it is very important that he will stay objective in all department matters. The workers will be efficient if the supervisor provide them with a predictible and stable work load.

1.2.3 Responsibility to Other Supervisors

It is very important that each supervisor gets to know all the other supervisors very well in order to establish good working relationships with them. This will improve the work flow between the departments, the exchange of information like deadlines for parts and products, it will help to solve problems with quality and tolerance problems. It is the target to create a supervisor team that can communicate and coordinate properly with the management.

1.2.4 Responsibilities to the Staff / Personnel Department

The staff department will approach the supervisor first regarding information about workers. He has to be able to judge requests for information from staff managers, try to be a middle man in these situations. A supervisor should coordinate standardized reporting forms and instruments with the staff managers in order to judge the employees performance. He should consult with appropriate staff managers to utilize their special expertise on staff problems (work attitude, late, drinking, fighting…)

1.2.5 Responsibility in Labor Matters (if company is unionized)

The supervisor has to know the basics of the CBA (Collective Bargaining Agreement) to keep a professional relationship with the union. He has to respect the terms of the agreement as a representative of the employer, even though he may personally disagree with it. The treatment of all workers has to be equally, union members or not.

1.2.6 Responsibility in general

The main purpose of supervision is to determine whether the individual who is responsible for the action **understands the information** and the directions that were given to him previously, and whether he is **following them satisfactorily**. The executive seeks to learn where further advice and instruction are needed by the subordinate. Another chief importance of supervision is that it can **catch deviations** of actual from planned results at a time when **corrective action** may be taken immediately. The executive, however, should remember several things about supervision. Many subordinates do not ordinarily like close supervision. As a matter of record, **successful managers do not over-supervise.** Subordinates who have been properly selected and indoctrinated need less supervision than a group seeking a complex of objectives, the significance of which they do not understand.

> Subordinates who have been properly selected and indoctrinated need less supervision

- ➔ Directing
- ➔ Guiding
- ➔ Leading

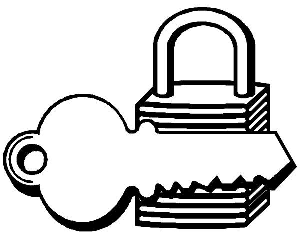

> Create an atmosphere where workers perform their assignments because they want to perform.

Directing, guiding, and leading are three **key words** that sum up the whole spectrum of supervision. Directing is a verbal or written function. It is telling subordinates **what they have to do and how they are to do it.** As a function of order-giving, it may range from a simple request to an authoritative command. The secret of effective leadership is not ordering people, but creating an atmosphere where they perform their assignments because they want to perform them. Exhibiting their leadership qualities, supervisors are able to guide and lead their subordinates grow and develop into capable and reliable workers and employees of which every organization would have reason to be proud of. To be able to direct, guide, and lead, in line with the function of a supervisor of "watching over", he must know what is going on, who is doing what, and what the working conditions are.

> The supervisor must know what is going on, who is doing what, and what the working conditions are.

2.0 Skills required by Supervisors

Based on all the responsibilities a supervisor has in a company we can summarize all the skills a supervisor should have to do a proper job. For the purpose of effective supervision, three sets of skills are required, namely:

3.1 Interaction Skills	3.2 Analysis Skills	Technical Skills
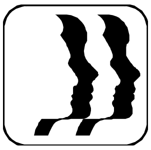		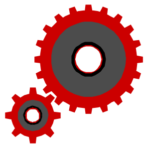
3.1.1 Communicate clearly 3.1.2 How to delegate 3.1.3 Successful meetings 3.1.4 Motivating people 3.1.5 Discipline 3.1.6 Rewarding performance 3.1.7 Training and developing the staff	3.2.1 Planning a process 3.2.2 Improving a process 3.2.3 Reducing costs 3.2.4 Daily Routine Activities	
Interaction skills include all the techniques managers and supervisors use to relate to their employees for purposes of providing direction and feedback. Basis for all interaction is the ability to communicate clearly!	**Analysis skills** enable managers as well as supervisors to study problem situations and other aspects of management, break into the minutest details and as such have a clear grasp and understanding of them. With everything set in clear perspective, they are able to formulate and implement the steps that may be found warranted by the circumstances in relation to the whole work system.	**Technicals skills** are very important for a supervisor. If a supervisor is not able to understand the working process and has not the knowledge which is required in his specific area of the production, he will not be able to make the right decisions and to plan properly. The workforce will not respect him because of his lack of experience and knowledge. If a former, excellent worker is promoted to a supervisor or foreman, he usually has enough technical skills.

3.1 Interaction Skills

3.1.1. Good Communication

3.1.1.1 Communicate clearly

Good communication is the lifeblood of organizations. It takes many forms, such as speaking, writing, and listening, though its purpose is always to convey a message to recipients. Use it to handle information and improve relationships.

Effective communication hinges on people understanding your meaning, and replying in terms that move the exchange forward – preferably in the direction you would like it to go. Communicating is always a two-way process. There are always at least two parties involved in any communication, each of whom may have different wants, needs, and attitudes.

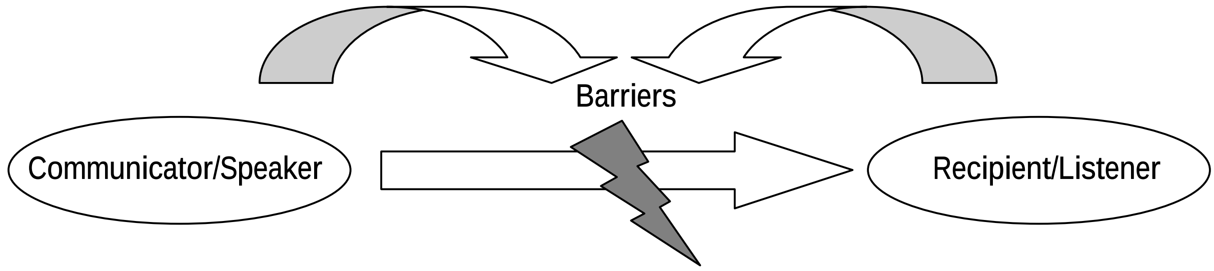

These wants and needs can present barriers if they conflict with those of the other party, and such barriers may stop you conveying or receiving the right message. Breaking down barriers is one of the first steps towards good communication.

- Maintaining eye contact
- Listening to what the other person is saying
- Mirroring body language

all help you to communicate successfully.

The three rules that govern good communication are all associated with clarity:

- Be clear in your own mind about what you want to say
- Deliver the message properly
- Ensure that the message has been correctly understood

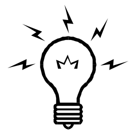

Good communication means saying what you mean – and fully comprehending any feedback.

2.1.1.1 Understanding Body Language and Gestures

Your body language – a huge range of unconscious physical movements such as posture, facial expression, and gestures – can either strengthen communication or damage it. Even if you are sitting completely still, you may be unknowingly communicating a powerful message about your real feelings. Because of its subtlety and range, body language is difficult to read and to control. However, a broad understanding of body language is one route to understanding the real opinions of others.

Make sure you are not unintentionally showing a hostile expression or posture.

Conquering Nerves

The nervousness people feel before making a presentation or attending a meeting is very natural. Use body language to appear more confident than you feel by making a conscious effort to smile and to relax your arms. Look people in the eye while you are talking or listening to them, keep your posture comfortably straight, and do not fiddle with your hands.

Keeping your Distance

Leaving an acceptable distance between people is part of body language, and this distance changes depending on situation. For instance, guests at a social gathering stand closer to each other than strangers in a non-social situation. Always take care not to intrude into another's personal territory in case you arouse defensive or hostile reactions.

Supportive gestures

Supportive gestures such as making eye contact and nodding while somebody is talking, create empathy – unless the person to whom you are speaking can tell that you are concealing your true feelings. Everyone can control their body language to an extent, but not totally. To avoid that the body language is contradicting you, try to be as honest as possible and show always respect to the one you are talking to.

Communicating by Body Language

Posture is all-important in body language. On a first meeting, these three postures would create very different impressions. The positive posture might have the best effect on the outcome by encouraging open communication, while the negative one would make communication difficult.

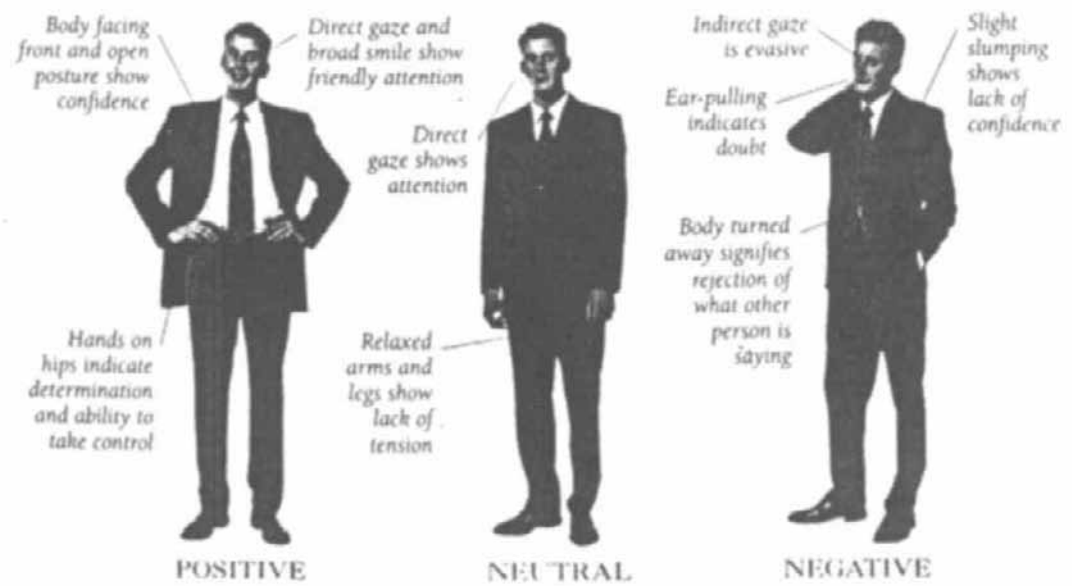

Recognizing Gestures

All skilled public speakers use gestures for emphasis. Devices like smacking your fist into an open palm, pointing, or spreading your palms can all reinforce points you make verbally. Remember that over-assertive gestures, such as banging a table, or other signs of anger, can alienate people.

> Practise a range of gestures in front of a mirror to find those that look natural for you.

2.1.1.2 Learning to Listen

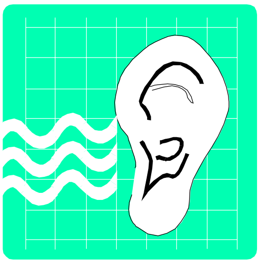

The two-way nature of communication – so that both sides understand each other – is widely ignored. Listening techniques are vital, since how you listen conveys meaning to the other person and helps to make the exchange successful.

Showing Attentiveness

When you are in search of information, consensus, or a working relationship, the more obviously you listen attentively the better. You may need to speak to get a respons, but show you do not wish to dominate the conversation. Ask open questions, which lead to discussion, and keep your responses brief. Repeat key words silently as you hear them to help you to remember what is said.

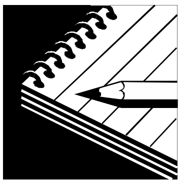

If you are taking notes while people are speaking, do not try to write their words in longhand and in sequences or you will fail to keep up. Instead, listen to what is being said and note down the key points in your own words. Try writing a succinct explanation of each point, and use headings and numbers to structure your notes.

Interpreting Dialogue

Keep an open mind about what people say.

Take statements at face value without reading hidden meanings into what is being said. Test your understanding by rephrasing statements and repeating them to the speaker. It should then be clear that you have understood each other – or they may correct you and clarify their statement. However, watch for physical signs, such as evasive eye contact, and verbal signs, such as hesitation or contradiction, that provide clues to the thruthfulness of the message. Be careful not to hear only what you want to hear and nothing else.

Recognizing Prejudice

Think about the words you hear, not the person saying them.

When what you see or hear only fulfils your own expectations you probably have an inflexible mind-set. Most people have this problem and are unconsciously influenced by stereotypical views. We are also influenced by others, and often adopt their opinions without thinking. Prejudices block good communication. If you can recognize your prejudiced ideas, you will be a better listener. A frequent mistake is to assume that you know what somenoe is going to say, and not to listen to the actual message. However, people do not always behave according to stereotype or expectation. Listen very carefully to what people are saying to you and do not let your prejudices get in the way.

Type of Listening	Putting Methods into Practice
EMPATHIZING Drawing out the speaker and getting information in a supportive, helpful way.	Empathize by imagining yourself in the other person's position, trying to understand what they are thinking, and letting them feel comfortable – possibly by relating to their emotional experiences. Pay close attention to what the person is saying, talk very little, and use encouraging nods and words.
ANALYZING Seeking concrete information and trying to disentangle fact from emotion.	Use analytical questions to discover the reasons behind the speaker's statements, especially if you need to understand a sequence of facts or thoughts. Ask questions carefully, so you can pick up clues from the answers and use the person's responses to help you form your next set of questions.
SYNTHESIZING Proactively guiding the exchange towards an objective.	If you need to achive a desired result, make statements to which others can respond with ideas. Listen and give your answers to others' remarks in a way that suggests which ideas can be enacted and how they might be implemented. Alternatively, include a different solution in your next question.

Acting on what you hear

In some cases, communication is an end in itself – an update on progress, for example. In others, action is vital – clearing a bottleneck in the production, say. What you must never do is promise an action and fail to deliver. A classic example is the employee attitude survey, which always raises expectations of action to remedy management errors. Failure to act on the survey findings means you have not listened and instead delivers a harmful message. Keep your promises – and take action as soon as possible.

> Keep promises in writing as soon as you can to avoid misunderstandings.

Listen → Respond → Act

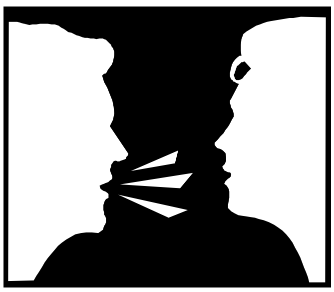

3.1.1.3 Asking Questions

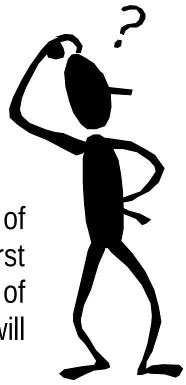

Knowing what to ask

The right questions open the door to knowledge and understnding. The art of questioning lies in knowing which questions to ask when. Address your first question to yourself: if you could press a magic button and get every piece of information you want, what would you want to know? The answer will immediately help you compose the right questions.

Choosing questions

Ask a specific question if you want to hear a specific answer

When preparing questions in advance, always look at the type of question that best meets your aims. You may want to initiate a discussion, obtain specific information, attain aparticular end, or send a command cloaked as a query. However, be aware that prepared questions will rarely be enough – answers to them may be incomplete or may prompt a whole new line of questioning. Keep asking questions until you are satisfied that you have received the answers you require. When asking prepared questions, watch out for clues in the answers that you can follow up later with a new set of questions.

Striking the right tone

Your tone of voice is a part of communication in itself – for example, you may convey anger by speaking harshly or sympathy by speaking softly. The wrong tone may generate a counter-productive response, so work on improving your ability to manage your voice. Practise until you are happy with how you sound. You can often steer pople towards agreement by using an optimistic and confident tone of voice.

Type of Question	Examples
OPEN Question does not invite any particular answer, but opens up discussion.	What do you think about the company setting up a canteen for all members of the staff? I think it is a good idea.
CLOSED Question is specific and must be answered with a yes or a no.	Do you ever read the company magazine or newsletter? No.
FACT-FINDING Question is aimed at getting information on a particular subject.	What percentage of staff has replied to the employee survey? Out of 2,000 questionnaires we got 70 per cent.
FOLLOW-UP Question is intended to get more information or to elicit an opinion.	Is this a good response compared with last time? Two-third is average, so this indicates reasonably good morale.
FEEDBACK Question is aimed at getting a particular type of information.	Do you think that the content of the newsletter has improved? Yes, I like especially the new reports about the sections.

3.1.1.4 Working with Feedback

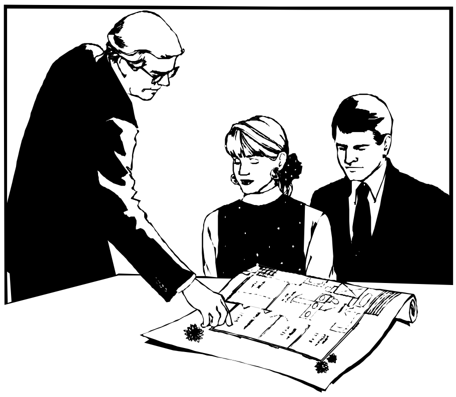

Managers and supervisors spend much of their time delivering and receiving messages in person. This can be the most critical – and satisfying – arena of communication. Honesty and feedback are both essential if you are to achieve clarity and progress.

Being Understood

Delivering a message that may be misunderstood is all too easy. It may happen because you are not clear about what you want to say; or because your language is vague even though your objectives are clear; or your body language contradicts your verbal message. A useful way to avoid misinterpretation is to **get the recipients to repeat your message –** you can then use their feedback to try to correct any misapprehensions. Use positive body language to emphasize your verbal message.

Giving Feedback

Feedback is essential to communication – to check that you have understood the other person's message, and to react to what they have said and done. It is vital that you react honestly to the statements or actions of your employees or staff members. Give reasons for positive feedback, and use questions when giving negative feedback. It can be difficult to give negative feedback, but remember that it is bad management to avoid doing this. When giving negative feedback, follow these simple rules to avoid any antagonism:

- Show an understanding of exactly what went wrong and why.
- Draw out ways in which poor performance or behaviour can improve.
- Use questioning to let the staff member know what you think and why.
- Aim to express your negative opinions honestly, but in a positive manner.
- Above all, take negative feedback away from the emotional zone by being objective, not personal.

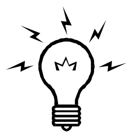

Below are some examples that you can use:

"I especially like how you found a solution for using an existing cutter block in producing the item."

"You are the right person for this job, because..."

"Would you agree that this sample is very unsatisfactory?"

3.1.1.5 Giving and Receiving Orders

When you were a worker you received your orders from a supervisor and now you receive them from somebody from the middle management. What is the difference between the two?

- As a worker you normally received an instruction for one job and when that was finished you got the next one. The communication was pretty easy because you and the supervisor spoke the same “technical language” and he could even help you with some complicated setups or jigs.

- Now you have to communicate with somebody from the middle management and you might have problems understanding him. What is wrong? The fact is that you and him are not speaking the same “language” anymore because you are a ”technician” and he is a “manager”. You have to learn to follow his instructions even so his technical knowledge might be limited. Apart from that you will not only receive one single instruction, but most probably orders for the whole day.

Receiving Orders

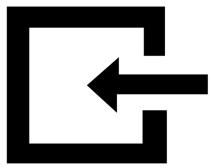

You have to translate the instructions you received from the middle management into technical language and distribute the different jobs to your workers. It is very important to write down the instructions you receive because there might be many of them and you might forget some details. With the help of these written notes you can break down the work into small steps, decide what machinery you want to use and which worker would be the right one to choose. You have to prepare a time schedule for the work and compare it with the ongoing processes in the workshop so that you will know which machine and which worker is available when. Than you can make a plan for the day(s) and you will be able to formulate proper instructions to your workers.

Giving Orders

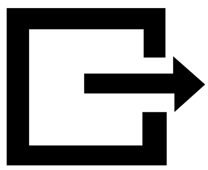

It is very important that you know the technical details of the process you want to explain to somebody else. All the processes of the work should be easy for you to explain. If you are not certain in a specific area you have to familiarize more with the machine and the process before you start explaining things to somebody else. In order to give good instructions you have to plan them. Before you give instructions, take a piece of paper and write down keywords for the processes you want to explain.

You have to be able to demonstrate the work process, this will support your explanations very much. Think about safety aspects before you make a demonstration because you have to consider that the worker will copy your action later on.

You can only be self confident and have some authority if you learn and practice the above mentioned factors. The workers will only accept you as a supervisor if you have authority based on knowledge.

3.1.1.6 Compiling Reports

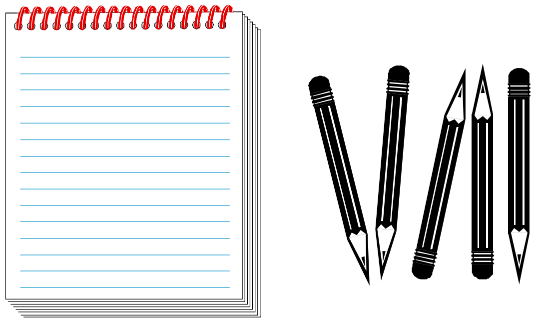

Reports are formal documents that will be read by others. They must always be accurate and well laid out, finishing with a definete conclusion.

Researching a report

If you are reporting on an activity of your own, check every fact to ensure acccuracy. If you have been asked to report on a subject – say, a new market for a product – write down what you need to know as a series of points. Then note the sources you can tap and match them to the points, making sure everything is covered. Before finalizing, get information supplied by one source confirmed by at least one other reliable authority.

Structuring a report

Write the purpose of a report and summarize its main conclusions in your opening paragraphs. In the body of the report, support your findings with evidence, set down in logical sequences, in numbered paragraphs. Use headings, subheadings, and bullet points, all of which are effective structural aids, drawing attention to key facts. Use underlining and bold type for emphasis. End the report with recommendations for action in summary form.

Ensuring clarity

Reports are not works of literature, but good ones follow the rules of good writing. Avoid ambiguities. If you are unsure about your conclusions, state the alternatives and invite the readers to make up their own minds. Express yourself in short sentences. Above all, put yourself in the readers' shoes. Will they understand what you mean? If you can, get a friend or colleague to read the report before you distribute it.

Be ruthless:
Cut out all unnecessary words in your report.

DO'S	DONT'S
▪ Do make each report interesting. ▪ Do emphasize your most important findings and facts. ▪ Do use numbered paragraphs to make cross-referencing easier and to keep points separate. ▪ Do use headings for changes of subject and sub-headings for related themes.	▪ Don't write long, unbroken paragraphs. ▪ Don't overuse the first person singular (I) or allow your personal prejudices to show. ▪ Don't draw conclusions from insufficient evidence. ▪ Don't print your report without thoroughly checking your sources.

3.1.2. How to delegate

3.1.2.1 What is delegation and why to do it

Explaining Delegation

Delegation involves intrusting another person with a task for which the delegator remains ultimately responsible. Delegation can range from a major appointment, such as the leadership of a team developing a new product, to one of any number of smaller tasks in the everyday life of any organization – from arranging an annual outing to interviewing a job candidate.

> Delegate to boost staff morale, build confidence, and reduce stress.

Increasing your time

Managers and supervisors commonly claim that the short-term demands of operational and minor duties make it impossible to devote sufficient time to more important, long-term matters. Strategic planning, control, and training are among the higher level activities which will suffer under the burden of undelegated, routine tasks which you wrongly attempt to do yourself. To create more time for yourself, more routine work must be handed down by delegation. Also, the more frequently you delegate the more experienced staff become, and the less time you need to spend on briefing.

> Set aside enough time each day for concentrating on your long-term projects.

The costs of avoiding delegation

Delegation takes time to organize and prioritize but the costs of avoiding it are high. The manager who does not delegate will not only seem disorganized, but will spend many hours each week completing low-priority tasks. This can result in:

- Excessive hours worked by senior managers or supervisors
- Low morale among under-employed staff
- Basic processes slowed down by bottlenecks
- Poor quality of work
- Missed deadlines

Questions to ask yourself

- ☐ Am I devoting enough time and resources to strategic planning and overall monitoring?
- ☐ Is my desk overflowing with uncompleted tasks?
- ☐ Am I delegating routine but necessary tasks to staff?
- ☐ Is staff training given priority to ensure effective skills for future delegation plans?

3.1.2.2 Recognizing and dealing with barriers

Barrieres preventing delegation are often based on negative feelings of insecurity and mistrust.

Doing it yourself

As a supervisor, you will probably be more efficient at many tasks than your staff. But if you attempt to do everything because you are quicker, surer, and more proficient you will inevitably find yourself overburdened. As a result you will not have sufficient time to spend on the higher-level tasks that only you can do.

Avoid keeping work because you do it better

Overburdening staff

The fear of overburdening staff is a strong barrier to delegation – it is natural for good supervisors to want to ensure that staff workloads are not excessive. If staff members appear to be working to full capacity, how can you delegate tasks without overburdening them? One solution is to keep back tasks and find time to do them yourself. A more sensible approach is to make employees analyze their own use of time and free capacity for more work. If staff shortage is truly the problem, the answer is to take on more staff.

Loosing control of tasks

The desire to be in total control is a common human trait. Delegation involves the loss of direct control, and this loss is a potential barrier to the delegation process. When delegating, the supervisor passes on responsibility for completion of a task to a chosen delegate. The delegator retains overall control by appointing the right person, having a clear idea of how the task should progress, and exchanging regular feedback.

Questions to ask yourself

- ☐ Can I learn from the way my own boss delegates to me?
- ☐ Why should it upset me if a subordinate performs part of my job brilliantly?
- ☐ How much spare work capacity is there in my unit?

Dealing with fear

Fear is a major barrier to delegation. Sometimes supervisors fear that delegates will perform so well that they challenge the delegator's own position. A parallel fear is that loosing part of the job diminishes personal importance. These fears may underlie a third – that the delegate will do badly. Tackle the fears by asking yourself four questions:

- ☐ Is the task suitable for delegation?
- ☐ Is the delegate competent to perform the task?
- ☐ Will I brief them fully and correctly?
- ☐ Will I give them all the right backup, authority, and resources?

If the answers are positive, then there is nothing to fear, and the delegation should succeed. Once you have overcome your initial fears, your efficiency as a delegator and supervisor will be greatly increased.

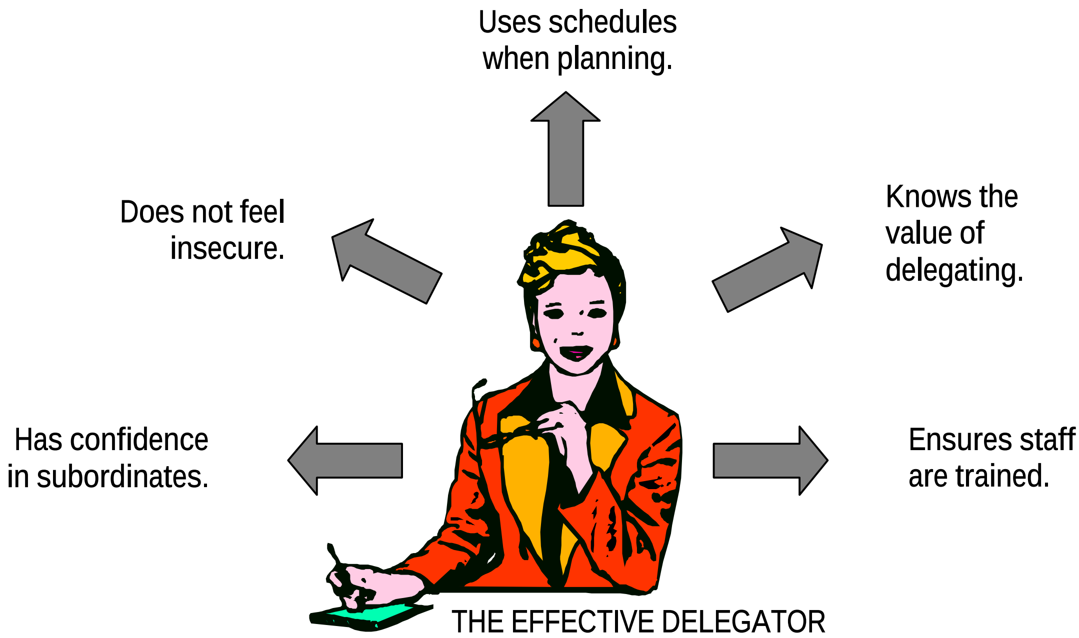

Being to busy

Some supervisors do not delegate enough because they lack the time to explain or monitor the tasks which should be delegated. Therefore, they are always busy doing the tasks that should have been delegated and they don't have time to delegate tasks – a vicious circle. Organize your schedule to ensure that you have enough time available to plan and manage a delegation properly, including writing an effective brief and the actual monitoring of your delegates.

> If you often say "I don't have time", you are badly organized.

Lacking trust

If both sides in the delegation process do not trust each other, the process will be hindered. A manager must have complete confidence in a delegate's ability to perform the task, and delegates should feel that their supervisors are consistent and fair in their approach. Subordinates must feel assured about their supervisors integrity, competence and loyalty. On both sides, trust is conditional. Maintain trust by showing respect to your delegate and by giving honest and constructive feedback during the delegation.

3.1.2.3 Selecting tasks

Before you can start delegating you must decide which tasks you could, or should, be delegating.

Analyzing your time

The way you, as a supervisor, distribute your work and how much time you allocate is probably under your control. A useful exercise is to determine how your actual expenditure of time matches the areas or tasks for which you are responsible. Start the analysis by keeping a detailed time log for at least two weeks: note all activities you undertake and the time they take. You will probably find that only a small amount of your time has been spent on the high-level activities that only you can do. Far more time will have been taken up by routine activities that could have been delegated.

Breaking down your tasks

After analyzing your use of time, analyze the tasks you are undertaking. Do this by dividing the tasks listed in your time log into the three groups outlined below:

Use this breakdown as a basis for reducing any unnecessary activities, delegating more tasks, and concentrating on tasks that only you can complete.

Where delegation seems to be necessary it has to be cleared with your own supervisor.

What tasks am I doing that need not be done at all? → Do not complete them yourself or delegate them.

What am I doing that could be done by somebody else? → Delegate these tasks to subordinates.

What tasks am I doing that can only be done by me? → You cannot delegate these, so prioritize them.

Prioritizing tasks

Having decided which tasks to delegate, your first concern is to allocate these tasks. Then prioritize the tasks you have decided to handle yourself according to their importance and urgency. Start each day by listing these tasks and tackle them one by one in order to priority. If circumstances allow, always complete a task before starting a new one. The closer you keep to this system, to more effective you will be.

Do not attempt to undertake more than seven tasks in one day.

3.1.2.4 Planning a structure

Exploring the fundamentals

The basis issues involved in delegation are **autonomy** and **control**. How much authority is the delegate able to exercise without referring back to the delegator? How far should the delegator exercise direct influence over the work of the delegate? When choosing a delegate, you are assessing whether a particular person is fully capable of performing the task within available resources. Having appointed a delegate, you must ensure that they are allowed sufficient autonomy to undertake the task in their own way, subject to an initial briefing and regular reports on progress.

Understanding the stages:

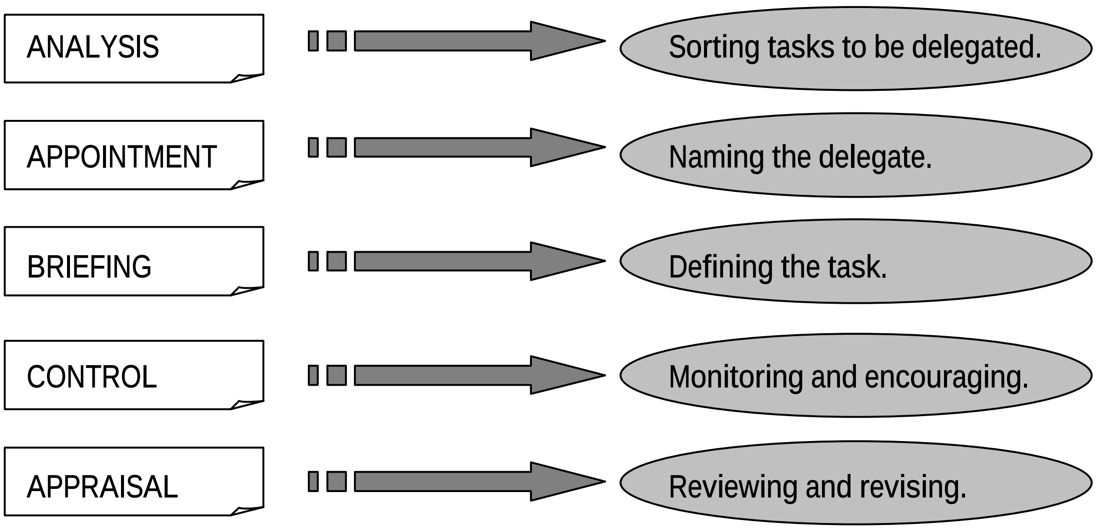

Setting up a structure

When setting up a structure, your priority will be to ensure that the organizational framework is balanced and responsive to any of the inevitable changes that can occur. Do this by ensuring that each delegate has sufficient support and back-up when unforseen problems arise and that, as far as possible, adequate cover will always be made available in any absence. Inform each delegate of the support structure you have devised so that each knows where they can go to seek assistance immediately in a crisis.

> Ensure to provide enough support and back-up to each delegate.

Avoiding duplication

When planning a structure, delegating, and distributing tasks, avoid giving the same task to more than one person. To prevent confusion, create a chart with all key activities listed on the left-hand side, and the names of those with delegated resposibility along the bottom line. Tick off each box in the chart with both a task and a delegate to reveal any gaps or overlaps in the distribution and structure of the tasks.

Defining the tasks

To delegate effectively, you need to define the tasks and also have a good understanding of a proposed delegate's abilities. So for each task in your planned delegation, work out a clear definition, including the skills required and the range of responsibilities to be delegated.

Setting guidelines

> Make clear to delegates the areas for which they are accountable.

Delegation operates within guidelines, and the most important of these is an understanding that each delegate will be accountable for a specific task. It follows that you must define the tasks very clearly, and the delegate must confirm that they fully understand what the task involves. However clear the delegation, and however much you wish to avoid interference, there are likely be occasions when the delegate does not know what to do. The guideline here is: when really in doubt, ask.

Appointing Sub-Leaders

Create a production team and involve them actively in the planning and decision making. Give them some responsibilities in the production and you can concentrate more on the management of the production. It is a little bit like having your "own company", now you are in the higher management and you have your own "sub-leaders" as supervisors supporting you in the day to day activities. By creating such an internal department structure you can solve some of the problems related to motivation: By delegating work and responsibilities to your group leaders they feel treated as individuals and they can implement some of their ideas, in the end they feel that their work is meaningful.

- Try to work down with this system to the workers who do not have a lot of self motivation
- Try to get them involved in the system in small steps
- Make notes of their performance, set regular individual meetings to discuss their improvement or the lack of it
- If you see potential in a worker but he lacks certain skills, give him some individual attendance or send him to some training courses outside.
- Sharing authority does not mean giving it away. You as a supervisor always remain ultimately responsible.

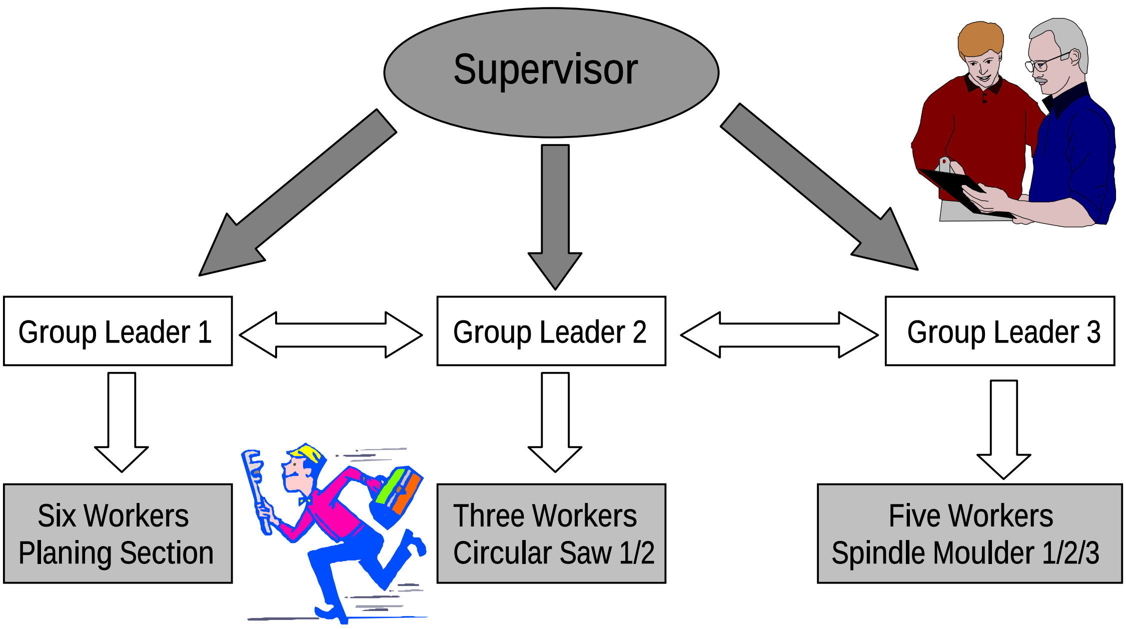

3.1.2.5 Briefing effectively

Using a checklist

When planning a brief, first define your objective and compile a full checklist to ensure that all the individual aspects of a task are included. The more complete the final brief, the more confident you can be that the task will be successfully executed. Your delegation should be based on breaking down a task into all aspects, naming the person who is responsible for each item, and eliminating overlaps of responsibility. Use the checklist to ensure that nothing significant has been omitted from the brief, and that component tasks have an explicit timetable.

Things to do:

- Keep objectives as clear and concise as possible.
- Build a certain amount of flexibility into the brief.
- Base the objectives on requires outcomes.
- Make a checklist to avoid overlaps and omissions.
- Ensure that the delegate is fully aware of the aims.
- Allow the delegate to comment on the brief.

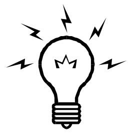

Structuring a brief

Parts of a brief	Factors to Consider
OBJECTIVES Defines the task, listing the major objectives and sub-objectives in clear and concise language.	List all the objectives and discuss them with the delegate before finalizing any agreement. Ensure that this list is referred to continually.
RESOURCES Specifies what personnel, finance, and facilities are available or need to be obtained.	Finalize resource needs after the objectives have been set. Ensure you include the limits to spending authority in the delegate's budget.
TIMESCALE Sets out the schedule with review points, stage completion dates, and final deadlines.	Use the schedule to motivate the delegate and to provide the basis for a critical path analysis showing all the completion stages.
METHOD Describes procedures, as agreed with the delegate, and summarizes the key points.	Devise and agree a thorough outline plan that will provide the delegate with a concrete but flexible methodology within which to work.
LEVELS OF AUTHORITY Specifies the range of the delegate's authority and to whom they will report.	Apply autority limits that tell the delegate when it may be appropriate to refer to you, and when they should use their own initiative.

Briefing sessions

The supervisor's task primary at the briefing is to communicate effectively and ensure the delegate's full understanding of the assignment: Explain the task objective clearly and state your expectations in terms of deadlines and levels of measured achievement. Be clear about which areas of the brief are flexible and which must be followed to the letter

Ending a briefing

Draw the briefing session to a conclusion by summarizing the key points of the delegation. End the meeting by thanking your delegate for taking on the task and communicate your confidence that the assignment will be carried out successfully – it is important to emphasize that you have appointed this delegate because you trust his or her abilities. Finally, establish a date for a follow-up meeting to review progress

3.1.2.6 Monitoring progress

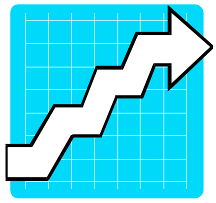

Reviewing progress

Once a task is underway, you will need to review its progress and the performance of the delegate. There are a number of ways in which you can keep tabs on proceedings, including face-to face discussions with the delegate, written reports, and personal observations. Choose a system that suits you, is appropriate to the task, and gives you all the informantion you need to review what has been achieved so far. It must also enable you to check that you are on course to achieve the objective and pinpoint any corrective action that may be required.

Avoiding interference

Supervisors who can maintain a distance between themselves and their delegates are more likely to see positive results. Nobody will work in exactly the same way as you, so resist the temptation to intervene the moment you suspect the task is not being performed your way. Instead, set up a system of regular checks, meetings, and reports, wether formal or informal, to ensure that the task objectives are being met. Heavy intervention, in which the delegator makes all the decisions, will frustrate the delegate and deny him or her the chance to gain experience.

Operate on the assumption that every process can be improved.

DO'S	DONT'S
▪ Do encourage all delegates to make their own decisions. ▪ Do move from hands-on to hands-off as soon as possible. ▪ Do intervene when absolutely necessary, but only at that time. ▪ Do ask delegates if they feel thoroughly prepared for their task.	▪ Don't say or hint that you doubt the delegate's ability. ▪ Don't miss any stage in the briefing process. ▪ Don't place seniority above ability. ▪ Don't deny a delegate the chance to learn by interfering to much. ▪ Don't take back a task without a good reason.

3.1.2.7 Analyzing Difficulties

Both the delegator and delegate need to analyze, and learn from, any difficulties encountered during a delegation. The first step towards finding a solution to a problem is to ascertain whether it stems from you, your delegate, the task brief, or procedure.

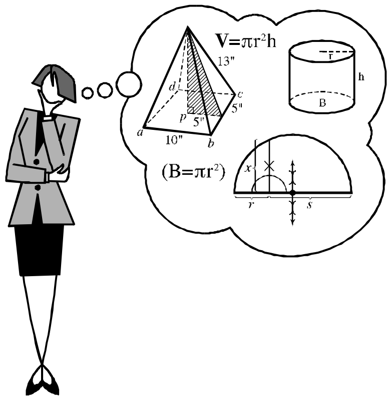

Questioning yourself

If a delegated task has not been performed to your satisfaction, look first at your own actions. Perhaps you should have kept this particular task to yourself, or been more selective when choosing a delegate. Go over the brief to find out if you could have made it clearer, and examine your monitoring procedures to be sure that they were adequate for the task. Maybe you made yourself too remote, or did not provide sufficient guidance when problems arose. Be as objective as possible in this self-examination so that you can identify and deal with your own weakness.

> Deal with any known difficulties at once.

Questions to ask yourself

- ☐ Was I too hasty in making the appointment?
- ☐ Is there somebody available who would do better?
- ☐ How can I prevent this problem from recurring?
- ☐ What would I do differently if I could start again?
- ☐ What are the delegate's strength and weaknesses?

Looking at Performance

Results alone will not necessarily tell you all you need to know about the performance of a task. More accurate indicators can be gathered from your **feedback sessions** with your delegate, and other **personal observations**. However, remember that you cannot maintain a delegate's trust if you make inquiries behind his or her back. Be open about seeking relevant information from trusted colleagues and inviting comments from those who are affected by the delegation. If any defects come to light, it is your responsibility to take steps to improve the delegate's performance.

Learning from Failure

Knowing how to deal with failure may be as valuable as the successful outcome of the task. Take the opportunity when things go wrong to extract as many useful lessons as possible. Naturally, managers and delegates alike will be tempted to come up with excuses rather than explanations when a failure occurs, but excuses elucidate very little and are usually smokescreens that obscure the reals causes of error. When you have identified a failure, carefully analyze the causes and discuss these with the delegate. Always stress that the sin is not to fail but to make the same mistake again.

> The sin is not to fail but to make the same mistake again.

3.1.3 Successful meetings

3.1.3.1 Participating a meeting
3.1.3.2 Running a meeting
3.1.3.3 One to one meetings

Most managers and supervisors feel they spend too much time in meetings. However, a well-run meeting can be a productive way to communicate.

3.1.3.1 Participating a meeting

If you as a supervisor are a participant in a meeting you are not active in the way you are when you are running your own department staff meeting. But you have to be active as a participant.

Being properly prepared
Usually the manager will ask you to give a report about the situation in your department or want to consult you concerning some problems with customers or the production. You have to be properly prepared for the meeting, otherwise you will hinder a productive and positive outcome of the meeting. You should be able to explain the situation in your department clearly by stating facts and numbers. So it would be good to make written notes before the meeting because you might forget things especially when you are excited about the situation. Take also written notes of the management's recommendations in order to implement them later on. If you are not sure that you got all the important points of the meeting do not hesitate to ask.

3.1.3.2 Running a meeting

When you are chairing a meeting, stay in control of the proceedings, and never let arguments get out of hand.

Preparing for a meeting
When preparing for a meeting, ask yourself four key questions:

- ☐ What is the meeting for?
- ☐ Why is it being called?
- ☐ How will I know if it has been successful?
- ☐ Who should attend?

Theses questions will determine wether the meeting is necessary. All meetings should have a purpose that will be achieved by their end. If final decisions are not made, there should at least be a plan of action. The most effective meetings are usually small with only vital people attending.

Circulate all relevant papers before th e start of a meeting.

Opening a Meeting

After making any necessary introductions, remind all those present of the meeting's purpose, what outcome it is expected to deliver, and when it will end. If there are ground rules, state them straight away. Check that everybody has any relevant papers and that the agenda is approved. If there has been a previous meeting, minutes may need approval and discussion, but do not discuss anything that already features on the agenda. Instead, go straight into the first item, preferably calling upon another participant to initiate the discussion.

Conducting a Meeting

Strike a balance between keeping the discussion process moving briskly forward and ensuring that everyone who wants to speak has a chance to state their opinion. The custom of debating an issue until a decision is made can be time-consuming and lead to tension. To prevent this, act as a timekeeper (make sure you have a watch to hand). Set time limits to discussions so you can end the meeting at the appointed time.

> Make sure you stick to the time limit for each item on an agenda.

Closing a meeting

Allow yourself enough time for winding up a meeting. Summarize the discussion and check that others agree with your account. Make decisions about unfinished business, which may include nominating someone to deal with it, and, finally, run through the implementation of any decisions taken. These decisions determine the actions, which will be the result of the meeting. Assign each action to a person, and attach a time target for completion.

3.1.3.3 One to one Meetings

A meeting with a staff member can be formal or informal. Use one-to-one meetings to check performance and find out if coaching or counselling is needed.

Meeting formally

For formal one-to-one meetings the rules are the same as for any other meeting. Get to the point quickly, stick to the agenda, sum up at the end, and make sure that the other side agrees with the summary. In any one-to-one meeting the relationship between the supervisor and subordinate has a tendency to move into one of dominance and submission. To make meetings productive, listen to the other person, aim for rational discussion, and be courteous. Remember that a certain degree of confrontation may be perfectly healthy – and also unavoidable.

- ☐ Try to meet staff for formal one-to-one meetings at least monthly.
- ☐ Stick to an agenda, and make sure you agree on any decision.
- ☐ Remember to listen to what is being said, and do not dominate the meeting.

Being prepared

For regular meetings, preparation can make all the difference between a satisfactory or unsatisfactory outcome. Some companies stage one-to-ones between supervisors and subordinates every month to discuss any problems, define objectives, and deliver written performance reviews. For these one-to-ones, the supervisors distribute the reviews a few days beforehand. This preparation time gives the staff a chance to consider their response.

Coaching Staff

Good managers must be good coaches who know how to encourage staff to raise their performance at work, improve their knowledge, and realize their full potential. Coaching is inherent in the whole management process and should not be confined simply to performance reviews and annual appraisals. As a supervisor, take the initiative by setting staff goals, by regularly encouraging staff to achieve higher standards, and by discussing any strength or weaknesses. As the people being coached gain in confidence and performance, they will take on more responsibility for setting personal targets for improving at work.

> Listen to your staff. Coaching and counselling may provide solutions to discontent.

Counselling Staff

Problems that arise either from work or from personal life can be helped by counselling. But unless you are a trained counsellor or have considerable experience, leave this to a professional, who will help people to confront and resolve their problems. If an employee has become unhappy over a situation, offer to arrange a counselling interview, and be sympathetic. The counsellor will try to help the individual get to the root of any problem. Give practical support when you can.

3.1.4 Motivating people

3.1.4.1 What is Motivation

Defining Motivation

Motivation is the will to act. It was once assumed that motivation had to be injected from outside, but it is now understood that everyone is motivated by several differing forces. In the workplace, seek to influence your staff to align their own motivations with the needs of the organization. To release the full potential of employees, organizations are rapidly moving away from **"command and control"** and towards **"advise and consent"** as ways of motivating. This change of attitude began when employers recognized that rewarding good work is more effective than threatening punitive measures for bad work.

Motivating long term

Self-motivation is long-lasting. Inspire self-motivated staff furtherby trusting them to work on their own initiatives and encouraging them to take responsibility for entire tasks. Highly motivated individuals are vital to supply organizations with the new initiatives that are necessary in the competitive business world.

3.1.4.2 Recognizing Needs

Satisfying Basic Needs

A well-known psychologist developed a "two-factor" theory for motivation based on **"motivator"** and **"hygiene factors"**. Hygiene factors – basic human needs at work – do not motivate but failure to meet them causes dissatisfaction. These factors can be as seemingly trivial as parking space or as vital as sufficient holiday time, but the most important hygienic factor is finance. A manager should try to fulfil staff members' financial needs. People require certain pay levels to meet their needs, and slow income progression and ineffective incentives quickly demotivate. Fear about lack of security in a job also greatly demotivates staff.

Ensuring Motivation

The second factor is a set of "motivators" that actually drive people to achieve. These are what a manager should aim to provide in order to maintain a satisfied workforce. How much a person enjoys achievements depends purely on its recognition. The ability to achieve, in turn, rests on having an enjoyable job and responsibility. The greater that responsibility, the more the individual can feel the satisfaction of advancement. Motivators are built around obtaining growth and "self-actualization" from tasks. You can raise motivation in your staff by increasing their resposibility, thereby "enriching" their jobs.

Heightening Workplace Motivation

MOTIVATORS	WHY THEY WORK
ACHIEVEMENT	Reaching or exceeding task objectives is particularly important because the "onwards-and-upwards" urge to achieve is a basic human drive. It is one of the most powerful motivators and a great source of satisfaction.
RECOGNITION	The acknowledgement of achievements by senior staff members is motivational because it helps to enhance self-esteem. For many staff members, recognition may be viewed as a reward itself.
JOB INTEREST	A job that provides positive, satisfying pleasure to individuals and groups will be a greater motivational force than a job that does not sustain interest. As far as possible, responsibilities should be matched to individuals' interest.
RESPONSIBILITY	The opportunity to exercise authority and power may demand leadership skills, risk-taking, decision-making, and self-direction, all of which raise self-esteem and are strong motivators.
ADVANCEMENT	Promotion, progress, and rising rewards for achievment are important here. Possibly the main motivator is the feeling that advancement is possible. Be honest about promotion prospects and the likely tirmescale involved.

3.1.4.3 Assessing your own Management Style

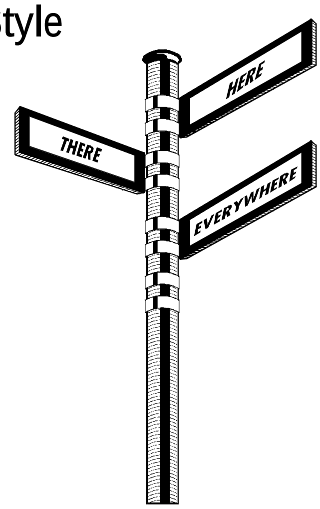

It is important that you understand your attitide towards your subordinates. Your thinking will be influenced by your experience, and will shape the way in which you behave towards all the people you meet.

Knowing your style

The forces that drive managers will strongly influence motivational behaviour. It is important, therefore, to understand your own assumptions and priorities, paying paritcular attention to your personal and corporate ambitions, so you can motivate others effectively. If you put your job first, you are probably highly motivated and know your career will benefit from success. Success is not just about meeting task objectives, but also about building an efficient, creative team that will succeed even in your absence. For this, a "share-and-collaborate" style may be more effective than an authoritarian "command-and-control" method.

Evaluating your Tendencies

Theorist Douglas McGregor defined two sets of management styles, which he labelled Theory X and Theory Y. Theory-X managers believe their staff respont mainly to the rewarding carrot and the disciplinary stick. Theory-Y managers believe their staff find work a source of satisfaction and will strive to do their very best at all times. Most people are not entirely X or Y, but fall somewhere in between. The X and Y theories apply not only to individuals but to organizations as well. Theory-X managers and habits will often be found in Theory-X organizations, and vice versa. Study the statements below to judge which of the theories best describes you and your organization.

THEORY X

- ☐ If I did not drive my people constantly, they would not get on with their work.
- ☐ I sometimes have to fire somebody or tongue-lash them to encourage others.
- ☐ Leaders have to lead by taking all key decisions themselves.
- ☐ I find that most people are unambitious and must be forced to raise their sights.
- ☐ I keep my distance from the team since it is necessary for effective command.

Managing by Theory X

A typical Theory-X manager is likely to keep away from his or her workforce much of the time. In fact, the only time the two meet is when orders or reprimands are to be given.

THEORY Y

- ☐ If somebody falls down on the job, I first ask myself what I did wrong.
- ☐ I should sometimes take a back seat at meetings and let others take the lead.
- ☐ If I ask someone for their opinion on an issue, I try to do as they suggest.
- ☐ People should appraise their bosses as well as be appraised by them.
- ☐ Anyone can have creative, innovative ideas if they are encouraged.

Managing by Theory Y

Collaborating with staff over decisions to be made, and getting feedback before implementing decisions, are traits that tend to be typical of a Theory-Y manager. This approach is often more motivating than that of Theory X.

Managing to Motivate

An essential foundation for motivation is a positive workplace environment created by you , the supervisor. Employees have the right to expect fair treatment and understanding. They also expect professional competence, part of which includes delegating tasks in order to increase staff members' self-management and participation.

Establish a system that is constructive – not obstructive – in which people can hope to perform at their best.

3.1.4.4 Creating a no-blame culture

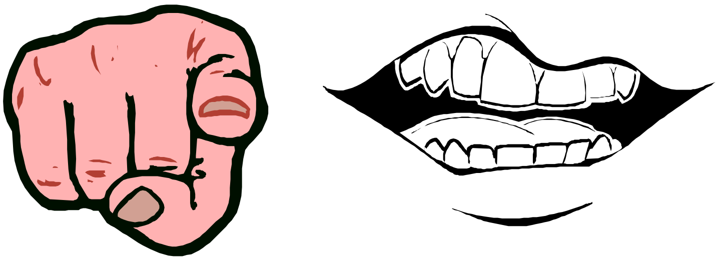

Anyone with responsibility – including yourself – must accept their failures. However, to motivate effectivly you need a culture in which no blame is laid for failure. Errors should be recognized, then used to improve changes of future success.

Learning from mistakes

The lessons of failure are valuable, not only to the individuals involved, but also to the organization. Discuss the reasons for failure, so that you can eliminate them and strengthen the platform for success. Taking a constructive and sympathetic attitude to failure will motivate and encourage staff. If you choose to punish failure or motivate by fear, you will not create lasting success. Make it clear that tolerance of error has its limits. Repetition of the same error is inexcusable, since it shows failure to learn from mistakes.

Repetition of the same error is inexcusable, since it shows failure to learn from mistakes.

Using action review

Action review is the process of systematically reviewing the success or failure on any project in order to learn from mistakes. The selected participants in the review agree on the lessons to be learned. These are put on record and circulated to everyone involved in the project, helping to establish what went right and what went wrong, and the reasons why. Use action review to inform staff what they should and should not do in futrue, and to spotlight the parts of the system that are in need to reform.

Be firm but fair when you are drawing attention to error, and do not pull any punches.

Questions to ask yourself

- ☐ What precisely went wrong, when and where?
- ☐ What were the root causes of the failures?
- ☐ When were the deviations first signaled?
- ☐ Why were the warning signals not acted upon?
- ☐ What could have prevented the failures from occuring?

Solving problems without attributing blame

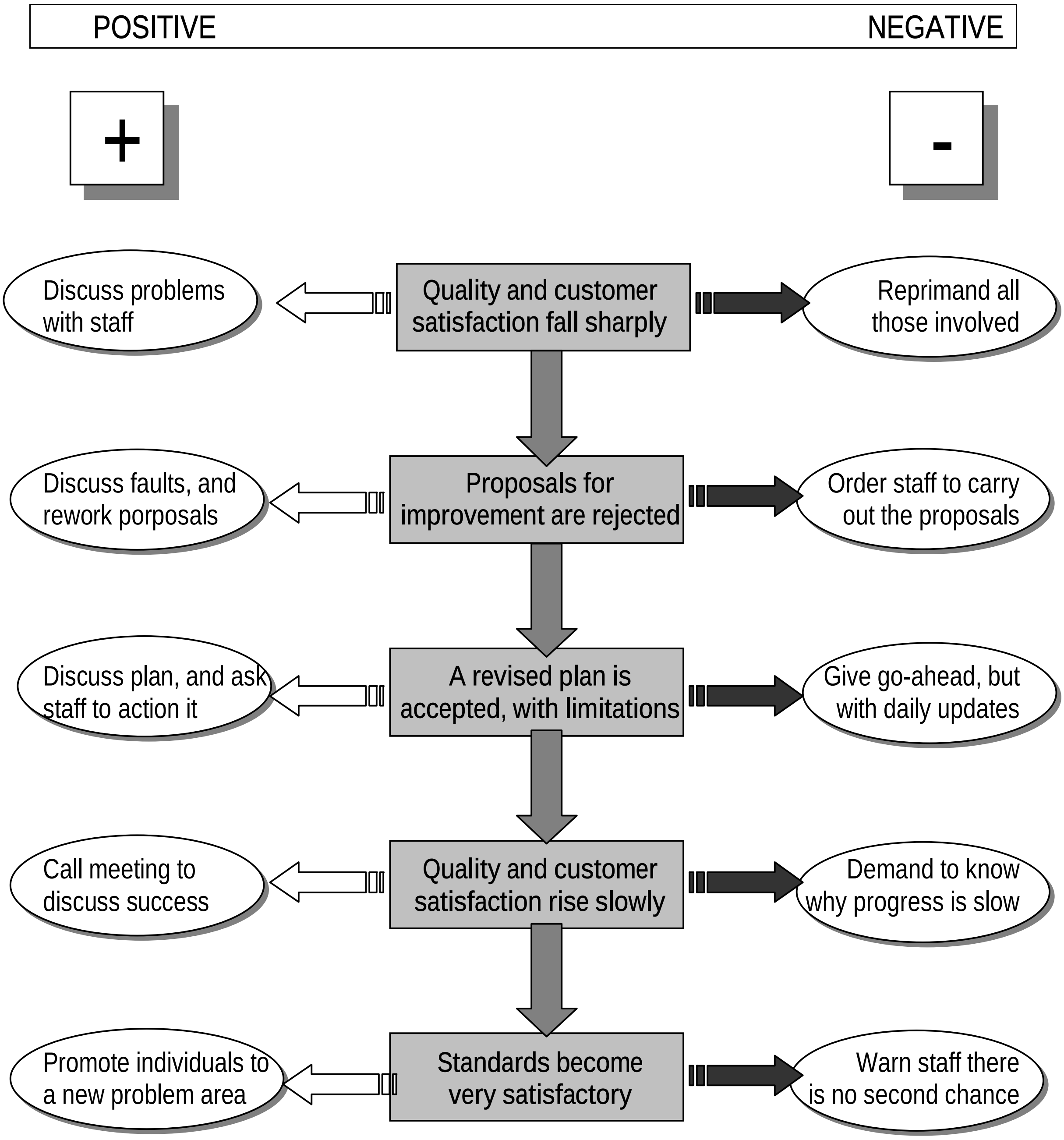

3.1.4.5 Winning Co-operation

The basic component of a motivational environment is co-operation, which you must give to your staff, as well as expect from them.

Helping Staff

Two key motivational questions to ask your staff are:

- "What do I do that stops you from doing a better job?"
- "What should I do to help you perform better?"

If you co-operate by acting on the answers, for example by investing in new tools or training if requested, you can bring about major improvements in motivation. Not acting on such feedback will demotivate. The prime objective is to **help staff to help themselves.**

Moving Control Levels

Levels of control vary from an insistence on checking and approving every action, to laissez-faire, in which people are free to perform as they wish and be judged only by the results. Increase motivation by moving towards less rather than more control. To do this, discuss and agree tasks, objectives, and methods beforehand, then allow the implementation to proceed independently, subject only to reports on progress and major deviations. In case of problems, do not blame, but consider potential remedies.

> Do remember that the best discipline is self-discipline.

Taking an overview

When analyzing staff motivation, stand back and look at the overall situation. Do not concentrate solely on one set of needs – wether they be team, individual, or task needs. Think about atmosphere, team complaints, and results achieved. Above all, ask a lot of questions – you will then form a picture of how the system operates and how well it works.

Using free incentives

Free or easy-to-supply incentives are a simple and essential way to win and maintain co-operation. Start by thanking people for a job well done, and follow this up with a written acknowledgement. It comes hard to many managers, but is an essential counterweight to criticism. Other ways to increase co-operation include acknowledging staff achievments publicly and holding specific meetings for the purpose of boosting morals. Be friendly and polite at all times – bad manners demotivate – and deal sympathetically with personal requests, such as time off for a special purpose. Play the helpful friend, not demanding employer, in these circumstances.

Working conditions

When we are talking about winning the co-operation of the workforce we should not forget about what the company should provide to create a proper working environment. A proper workplace shows the staff that you value them and will increase their co-operation. Ask yourself the following question about the workshop situation and try to improve until you reach the proposed conditions. Formulate similar questions for other workspaces such as packaging area, administration office, etc.

- ☐ A safe working space is compelling. Do they use in the machining section fences and guides, proper jigs and other safety equipment?
- ☐ Does the finishing section provides masks to keep the workers from inhaling fumes and dust?
- ☐ Is proper lighting be provided?
- ☐ Is the workshop floor out of concrete and are you able to use trolleys for the workshop internal transport?
- ☐ Is the workshop cleaned daily and as dust free as possible?
- ☐ Are the machines maintained regularly by a mechanic?
- ☐ Has the workshop a dust exhaust for the machines?
- ☐ Are the tools organized in a tool room and are they kept sharp all the time?
- ☐ Does the company provide good quality raw materials or is it the cheapest available?
- ☐ Is there an existing production administration system implemented? Do you use Routing Sheets, Cutting Lists, Drawings, and Samples to speed up the production?

Asking for suggestions

The result from one survey showed that in the typical company only 4 per cent of the ideas for improvement ever reach the top. Do not let that happen. Invite suggestions via a suggestive box, or hold brainstorming meetings. Respond positively to all volunteered ideas. Use marketing devices such as "Idea of the month" to recongnize and encourage good contributions. If at all possible, accept each suggestion, even if it must be modified. If you must reject any ideas, explain to the staff why – and do it with sincere regret.

Using Individual Efficiency Projects

When you find a suggestion that you are keen to implement, allow the person from whom it came to see it through to fruition. The idea behind this action is that the staff member whose suggestion it was is likely to have the most enthusiasm for it and be very motivated to ensure that it is a success. He or she should be free to delegate the whole task or any of its parts, but it remains their responsibility. Use this as one of your chief motivating factors when requesting suggestions from your staff and you are likely to be much encouraged by the increased enthusiasm that will result.

3.1.4.6 Dealing with Demotivation

The course of people management seldom runs smooth, and emotions often run high on both sides of the process. The most valuable technique you can use for preventing demotivation is a sympathetic and understanding human response.

Identifying causes

Demotivation must first be analyzed before you can do anything about it. It may be caused by stress, emotional problems, or physical illness. Alternatively, there may be something wrong with the job itself, or with the person's approach to it. Talk to the demotivated person in order to identify where the problem lies, and tailor the remedy to the cause, for example by arranging secretarial help for someone who is overworked.

Tackling Problems

Personal difficulties and workplace problems are both potential causes of demotivation at work. Never ignore your staff's emotional strains, even if performance is going well, because there is a high probability that the personal troubles will eventually affect work. Your first responsibility must be to the job. At the same time, you must also look after the individual. Approach emotional upsets in the same way as workplace difficulties. First, get the problem clearly defined, then seek the root cause. See if there is a solution that the individual will accept. If so, act upon it. It is important not to let the situation worsen. If you are unable to provide enough help, make sure that you find someone who can.

Encouraging Teamwork

When team members of your staff seem to be constantly at loggerheads, masterly tact is usually required to replace the element of confrontation with collaboration. One course of action is to move the couple into a larger team, insisting that they co-operate with and not ignore each other. Another approach is to have the two people swap roles for a while, so that they can gain an understanding of each other's workload. If all else fails, separate the two warring parties permanently to avoid disrupting the work of the entire team.

3.1.5 Discipline

3.1.5.1 Rules and regulations

The "Rules and Regulations" of your company is a very important tool to keep up work discipline. When you start your job as a supervisor, get a copy of the rules and regulations and read them carefully! Go to the staff department and discuss the contents and the routines with the responsible managers. Sit down and “translate” them into terms the workers can easily understand. Conduct a meeting with the workers and explain the rules and the consequences of possible misbehavior. Clarify with the workers that once they sign the working contract with the company, both parties agree to certain terms, which should be binding for both parties.

Give them examples!

How much money does it cost the company if
50 workers come 30 minutes late 20 days a month at an average salary of 150 Peso/day?

8 hours x 60 minutes = 480 minutes a day
150 Peso / 480 minutes = 0.3 Peso / minute

0.3 Peso / minute x 30 minutes late x 20 days / month x 50 workers = <u>9000 Pesos / month</u>

Productivity is lower because the attendance per day is only 94 % instead of 100 %.

3.1.5.2 Disciplinary Action

Check with the staff department on implementation guidelines and forms for disciplinary action. Keep written proof of misbehavior. Ask the worker for a one on one discussion and:

- Describe the performance problems and review past discussions and reminders
- Ask for reasons for the situation and listen openly to the employee's response (do not get involved too deeply into personal problems because you will loose your objective position).
- Indicate what kind of disciplinary action you must take, and explain why
- Discuss and agree on ways to improve the workers performance and set a follow - up date
- Ask the employee to summarize the discussion in order to find out whether he takes the situation seriously and whether he understood the problems
- Indicate your confidence in the employee's ability to improve and give hints on how to do so.

Your role as a supervisor is to be a **mediator** between the workforce and the management. You have to stay objective. Leave personal emotions out of a meeting like that.

3.1.6 Rewarding performance

3.1.6.1 Evaluating each job
3.1.6.2 Appraising effectively
3.1.6.3 Rewarding exceptional preformance

3.1.6.1 Evaluating each job

Before you can start to evaluate the performance of somebody in a job, you have to find out about the features of the job and if these features are still appropriate. Conduct a thorough evaluation of all aspects of each job and the way you measure performance before you start appraisals.

Defining performance
Every job has its own skills, necessary knowledge, and attributes, so be sure to know and to specify them. Whatever level of job you are looking at, it should be of interest and give satisfaction to the worker. Including the factors below will help to make any post more appealing in the long term and motivate the job holder to perform more effectively. Check each job if the different areas are covered or if you have to make adjustments.

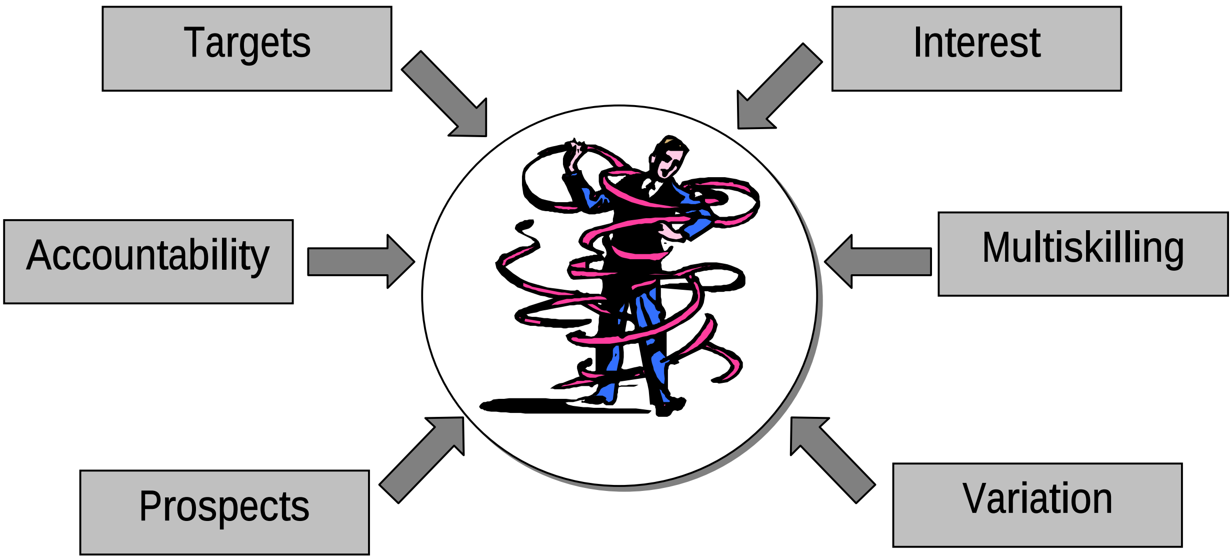

Another part of the process of evaluating an exsisting job involves looking at past performance levels and deciding what new qualities or tasks are needed to improve them. Arriving at a single measure of performance is difficult. Financial results are the best all-inclusive measure, but do not rely solely on them, since they will convey the wrong message – that only profit counts. To measure quality, rather than just quantity, include staff morale, customer satisfaction, inter-team collaboration, and other specific areas.

Using grading systems

Your organization may run its job and reward system in a rigid, graded way. And you may be in a situation where almost all of the factors are outside of your control. If that is the case, make the most of the rewards that you are able to distribute. If you are in a position to make such decisions, remember that grading jobs and their occupants, and assigning to each grade a salary band may be useful. Aim to keep the number of grades as small as possible, the pay bands as wide as possible, and the importance to staff of the grading system as low as possible.

Regard grading systems with caution – not as sacred.

Putting the job first

The key point to remember when evaluating jobs is that the job is more important than the grade, which is merely an administrative convenience. The lure of rising one or two grades may well be motivational, but rules for how many grades staff can advance at any one time, or stating that "a lower grade cannot be the manager of a higher grade" are nonsensical and unnecessary. Get the right person for the right job, and make it clear that the grade goes with the job, not vice versa.

3.1.6.2 Appraising effectively

The true objective of appraisal systems is not to blame, reward, or praise, but to develop. In some progressive organizations, the appraisal is not labelled as such, but is called a "personal development plan" or something similar. Conduct your appraisals properly, and you will help people to form an objective view of their past performance. More importantly, you will also be equipped to encourage better staff performance as well as to enable and assist the interviewee to take on greater responsibility in the future.

Discussing weaknesses

In appraisals, emphasize what the people being appraised have done well – their strength. You must, of course, also remark on and discuss their weaknesses, but only for improvement´s sake. Eliminating weaknesses strengthens performance. It is not just staff performance that should be discussed. How does the person being appraised perceive the contribution of the appraiser? Has the supervisor been helpful and motivating throughout the year? If not, the appraiser has just as great a responsibility to improve performance as the others.

Questions to ask your staff

- ☐ Can I do anything to help you to perform better?
- ☐ Am I doing anything that hinders your performance?
- ☐ What do you see as your key strengths and weaknesses?
- ☐ Have you any ideas about how you can improve or develop yourself as a team member?
- ☐ How could your job or the system be improved?

Listening to opinions

Appraisal interviews provide a chance to talk widely over external and internal matters, so do not confine them to issues of personal performance. Remember that all employees are sources of ideas and opinions. Discuss these throughout the year, not just at appraisals. Note the ideas and opinions that you think the company could benefit from, and consider implementation. The appraisal is ideal for constructive question-and-answer sessions, and you, as the suppervisor and appraiser, should do more listening than talking.

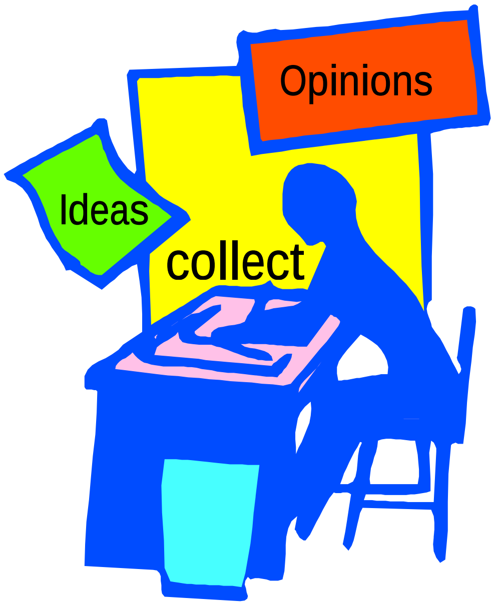

Following-up after appraisals

The fact that formal appraisals tend to take place annually does not mean that appraisal is a once-a-year-only process. In particular, the formal appraisal contains elements that need to be followed up more regularly – perhaps monthly or quarterly. For instance, if a weakness was diagnosed, and training followed, has this been effective? Is the person now confident with that element of his or her job, and able to use the new-found knowledge effectively at work? Follow up any interpersonal problems on a quarterly basis. Such follow-up is essential for maintaining the high level of motivation that the appraisal should have triggered. If an appraisal did not motivate, use the follow-up to find out why, and how to get better results.

Developing ability

Write a list of the key qualities that are needed for a particular task, and assess how they match the qualities of the jobholder. If you feel there is a mismatch – especially one that is likely to cause demotivation – do not reallocate the task, but take immediate action to develop the missing attributes. Abilities are learned, and rarely inborn. In almost every case it is possible to be taught a necessary skill, and where abilities are weak they can nearly always be developed. If you feel certain qualities need to be acquired, be sure to provide the training.

Evaluate strengths and weaknesses → Ensure job makes full use of strengths → Provide training to improve weaknesses

3.1.6.3 Rewarding exceptional performance

Defining exceptional performance
The term "exceptional performance" is not a fixed, scientific measure. It varies from task to task, and job to job. As a supervisor, it is important that you recognize and reward what you consider to be genuinely exceptional. To do this, carefully work out, and fix solidly, the levels at which both financial and non-financial rewards are triggered off. Seek to ensure not only that good work gets good rewards, but also that top standards are not so high as to be impossible to achieve.

Offering non-financial rewards
Achievement is its own reward – but it is never enough. Achievers also want recognition. Even a simple "thank you" is an important, underused reward that costs nothing. Staff also value inclusion in events like away-days to discuss company strategy. Such events fit into development programes that are central to sustaining job satisfaction, increasing responsibility, and enhancing career progress and personal growth. Other non-financial rewards such as gifts and holidays may prove cheaper than cash rewards – and everyone loves to receive presents. However, these provide less motivation than individual recognition, and are not substitutes for good, year-round management.

Considering non-financial rewards

REWARD	FACTS TO CONSIDER
RECOGNITION Handwritten note, engraved trophy	An often overlooked form of reward that is personal as well as being effective in both the short and the long term.
GIFTS AND PRIVILEGES Holidays, sports facilities, merchandise	Immediate, and stimulating in the short term. May not meet long-term motivational needs.
SPECIAL EVENTS Weekends away, parties, gatherings	Involve staff from all levels. Can stimulate, relax, bond, and motivate staff.
PROFESSIONAL TRAINING On- or off-site courses	Effective, focused training brings high returns. Company gains a qualified employee, who feels valued.
SELF-DEVELOPMENT Personal, non-vocational training	Very high motivational value. Enhancing self-image raises performance level at work.
EQUIPMENT Company car, lap-top computer	Expensive equipment is highly motivational. Need to ensure that equipment is fully utilized.

Offering cash rewards

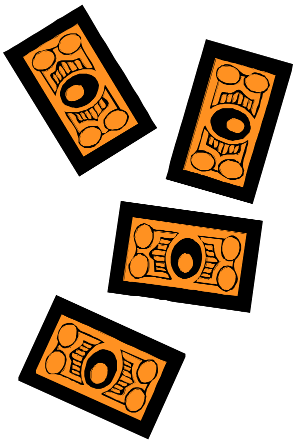

Use rewards in the form of pay increases or financial benefits to recognize achievement, prevent a high-flying staff member from leaving the company, or encourage an individual to take a greater level of responsibility in his or her job. Remember, however, that this type of reward often has only short-term motivational value. It can also lead to resentment among other staff members, and discourage interaction within a team.

Considering financial rewards

REWARD	FACTS TO CONSIDER
SALARY INCREASES Increases in basic rate of pay	Money is a powerful short-term motivator: the bigger the rise the higher the motivation. The impact wears off relatively quickly.
COMMISSIONS AND BONUSES One-off payments linked to targets	Increases motivation and job satisfaction. There can be difficulties in fixing rates and relating these rewards to base pay.
PERFORMANCE RELATED PAY Regular wage increases based on target-linked performance	Is motivational and can be a tax-effective incentive. There may be a delay between earning and receiving PRP, therefore weakening its impact.
SHARES/STOCK OPTIONS Gifts of shares, or the chance to buy shares at a fraction of actual value	Encourages long-term loyalty and sense of involvement. Reward is not immediate, and initial benefit may be small.
SPECIAL RATES Help with mortgage/rent, insurance, and other items.	Has considerable staff-retention value and can act as "golden handcuffs". Has low motivational value.
FAMILY HEALTH BENEFITS Paid or subsidized schemes offering privat family health care	It is in an organization's interest to have healthy staff. Has low motivational value as healthcare provision is increasingly expected from companies.

Celebrating success

Personal thanks for exceptional performance are powerfully reinforced by being repeated or given at a public celebration. Celebrate success, and you can motivate everybody in the unit, not just the achiever. External awards and dinners have proliferated, and few industries are now without them. Pay for entries and tables at these events, and make a fuss of any winners. The same format applied internally is also effective. If a whole team, rather than an individual, is involved, celebration is highly appropriate. Parties give you the chance to motivate by words and by singling out special contributions. Ensure that any event of this type is carefully planned and well staged. Skimping on any element, especiallly on catering, is a false economy in terms of motivation.

3.1.7 Training and developing the staff

3.1.7.1 The importance of training

Training helps to improve the technical skills of team members and develop the managerial and interpersonal relations within a unit. Review and upgrade the skills of a unit constantly to meet current and future challenges successfully.

Assessing costs

Despite the expense involved in training, it is cheaper than the cost of persisting without it, which will damaging the performance. Calculate the costs of training, including training staff, materials, room hire, course fees, subsistence, travel, and loss of work hours. Weigh up these costs against the expected financial gains and improvements evident in team performance following training.

Training unit members

When trying to optimize the various skills in a unit, involve the whole unit/team in planning its own development. The aim is to reinforce the strengths and eliminate the weaknesses of all the unit members, and develop those skills necessary to seize future opportunities and see off any threats. Discuss these aims with the whole team, draw up a training plan, and work out with each individual what his or her own needs are now and what will benefit projects and the unit as a whole in the future. It is ineffective and demoralizing to delegate a task to someone who lacks the necessary skills. Never place people in new or changed roles without first providing the training they need, and always keep the option of further training available. Always build delegation on a foundation of on-going training at all levels so that suitably qualified people will be available whenever you need them.

> Listen to the feedback given by trainees about training courses.

Training leaders

As a supervisor, you should be exemplifying the qualities necessary to manage a unit/team successfully. Ensure that you receive the requisite training to develop prioritizing, process-chasing, delgation, and motivating skills. Make these an integral part of your personal development plan, and ensure that unit members – especially your sub-leaders – also develop their own leadership skills. Listening carefully, criticizing constructtively, being tolerant of error while correcting mistakes, and retaining objectivity are leadership qualities that members should use within a team and in future projects.

> Set an example to your staff by being trained yourself.

3.1.7.2 Developing a training plan

Since you want to get the best out of your staff you should think about training and developing them in a structured and planned way. You as a supervisor can not do it alone, you need the co-operation of the HRD department and the top management. Formulate well planned proposals and emphasize on the advantages of a successful training program.

Informal training

You can develop your staff in informal training, meaning to say you train them within the production while you assign a job to them. This training has the advantage that you can take care of each worker by himself. On the other hand communication is not so easy because of the noise in the workshop. Mostly you will only have time to show him HOW something works but not WHY. When it comes to the next assignment you might have to start from zero again. To avoid this, you have to use a specific training method that assures a good and long-term training effect. We call the method the Four-Step Method, which will be explained in the following chapter.

Formal training

On the long run your staff development will be more efficient if you try to introduce some formal training to your department / company. A formal training will be done either through you or part of your more experienced staff in a planned and organized schedule or mostly through other training institutions.

- ☐ Before you can actually start with a formal training, you should evaluate the staffs strengths and weaknesses in order to know WHAT you should teach them.
- ☐ Try to classify the staff in each training relevant area into three different skills levels (Beginner, Advanced, Experienced) and make training plans according to these results.
- ☐ Talk to the HRD department and the management about time and a room to conduct some of this formal training for the three different levels on a Saturday or as evening classes.
- ☐ Do not put all staff members into one class because the experienced ones will be bored and the beginners will be overcharged and can not follow your explanations.
- ☐ Accompany the theoretical lectures with some hands-on practices in a quiet workshop.
- ☐ Try to convince the HRD department to introduce a company internal grading and certification system. At the end of a “Circular Saw Training Module” the worker should undergo a hands on exam and if he passes should receive a certificate as a “Circular Saw Operator”. This system should be accompanied as well by some incentives, workers who undergo these training and take them seriously should be acknowledged. Try to convince somebody from the management to hand out the certificates to stress the importance of the program.
- ☐ Make a Manpower Development Plan with HRD to send some staff members to Training Centers, especially if you do not have time and facilities to conduct training in your own company.
- ☐ Be serious about the training and explain it to your staff according to that. While courses are conducted, discipline, attendance and active participation should be valued very high

3.1.7.3 Effective teaching with the 4-step method

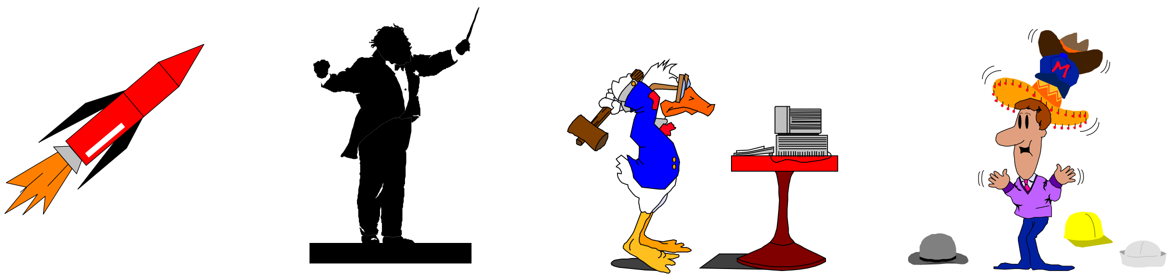

1. 2. 3. 4.

The informal training in a company to teach technical or handicraft skills of any kind should be done in an appropriate way to ensure a successful impact. There is a special method for this kind of teaching that was developed by taking into consideration the principle of learning of the human being. This method is taught in Germany and many other countries to mastercraftsmen to equip them with a proper knowledge to teach effectively and successfully. You have to break down each working process in very small steps and make a kind of work analysis that will help you to apply the four-step method. You find a form for the work analysis on page 47.

The four-step method

Learning is not only done by explanation but also by imitation, repetition and exercise. To manifest the learned topic in the long term memory you have to concentrate on all of these parts to assure a positive result. The four steps are the following:

1. Step: Preparation of the trainee
2. Step: Demonstration and explanation
3. Step: Trainee activity
4. Step: Exercising and strengthening

<u>1. Step: Preparation of the trainee</u>

- ➔ Take the shyness
- ➔ Motivate
- ➔ Show the ojvectives and tasks
- ➔ Evaluate the knowledge
- ➔ Familiarize with the working place
- ➔ Give advices concerning safety

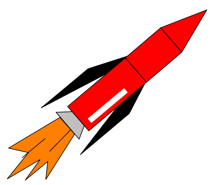

2. Step: Demonstration and explanation

- ➔ Place the trainee so that he is standing in the same direction to the workpiece than you.
- ➔ Demonstrate the whole procedure in the original time.
- ➔ In case of complicated procedures devide them into modules and teach them step by step.
- ➔ Repeat the demonstration and make the single steps visible
- ➔ Say **what** you are doing, **how** and **why** you are doing it in that way.
- ➔ Give the opportunity to ask questions.

3. Step: Trainee activity

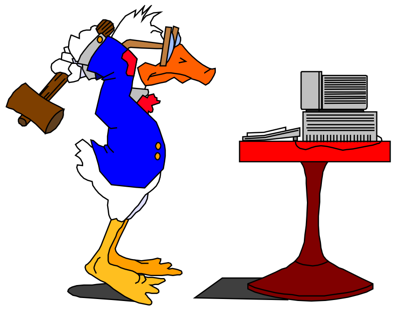

- ➔ Enhance the trainee to try it on his/her own.
- ➔ Don't interrupt the trainee in his/her first attempts.
- ➔ Make comments on serious mistakes.
- ➔ Precision is more important than speed.
- ➔ Let the trainee say **what** he/she is doing, **how** and **why**.

4. Step: Exercising and strengthening

- ➔ Give enough time to exercise.
- ➔ Acknowledge progress.
- ➔ Control that no mistakes are done during the process.
- ➔ Change the conditions of exercising.
- ➔ Slowly adapt to real working conditions.

How to break down a working process

Scheme of a work analysis

Workprocess:

Tools required:

No.:	Work Steps WHAT?	Explanation of process HOW?	Reasons WHY?
01.			
02.			
03.			
04.			
05.			
06.			
07.			
0.8			

3.2 Analysis Skills

3.2.1 Planning a process

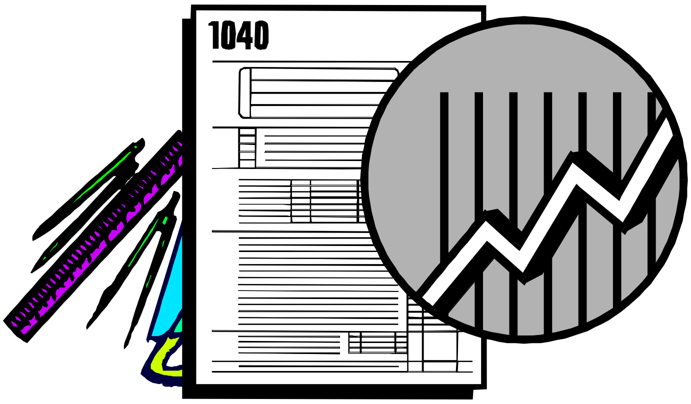

3.2.1.1 Determination of goals

Before we can start with the planning of the production we have to determine the goals we want to achieve. Normally you will do that first with the management, most of the time they will give you the production numbers (goals) to achieve in one day, week, month. Study the given information like technical drawings, bill of materials, etc. carefully.

You have to consider some aspects for the determination of your goals:

Output of the production	=	number of items to produce in specific time
Quality and workmanship	=	determine the quality of the product in relation to the time available and the requirements of the customer
Cost and Budget control	=	consider the costing when you produce an item, production time and quality are relevant

Clarify these aspects before you start your production planning in order to achieve the right output before the deadline, in the right quality and within the cost frame.

3.2.1.2 Plan the accomplishment

Now that we have predetermined the goals to achieve we have to ask: “How can we achieve these goals?”
You have to think about some given facts before you can continue:

- How many skilled workers do I have to do the job?
- Which machines / tools are suitable for the job and are they available at that time?
- Which jigs are necessary and are they available or do you have to prepare them?
- Are the right materials available / prepared for the job? (Contact Lumberyard, Machining)
- In a small company you even might have to do the costing, so you need the necessary data like material prices, available dimensions and machine hour rates.

With this information and the drawing etc. you are able to start the planning of the production for the next period. Discuss it again with the manager if the production goal is too high, be specific, have facts and numbers when you talk to him.

3.2.1.3 Development of Plans and Actions

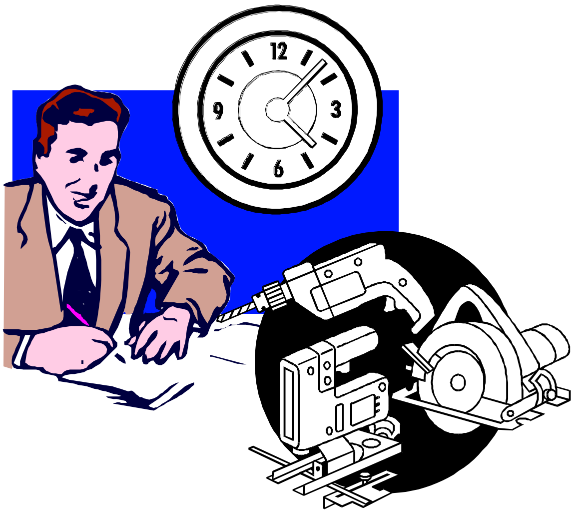

The implementing stage

After you gathered all the data, you should be able to proceed with your planning to the implementing stage. You have to prepare for example routing sheets where all the **processes** for a certain work piece are described. You state as well the **equipment** used for each process, plus the **estimated time** for the process. Depending on your system you can determine the workers on the routing sheet as well. This way it is easy to utilize the manpower properly and you can inform the workers easily about their daily duties.

The use of a production plan

In a normal workshop you do not have only one order at a time but maybe three to four, so you have to make a production plan in order to coordinate the different orders with each other because they have different deadlines, materials, need different equipment and manpower. You are the one who has to know at which stage each order is. This production plan can help you when you have to consider changes in your production line and the timing of deadlines. A proper production plan makes the discussion with the management much easier. When you start making a production plan, try to incorporate your best workers into this process because they have the most practical experience and good judgement. Try to update the production plan daily to make the most use of it. Check for “bottle necks” in your production line, machines like circular saw and spindle molders are often overloaded with work and the whole production line has to slow down because of one machine. Try to think of alternatives like: second shift for special equipment, different production processes where different equipment is used, more manpower in certain sections.

3.2.1.4 Controlling and Review Procedures

Controlling is the work a supervisor performs to assess and regulate work in progress and to assess the results secured. In order to do so, we have to be able to establish some activities to analyze this progress:

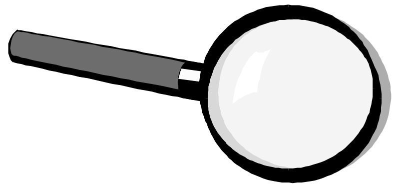

Setting Performance Standards

Before we can actually evaluate performance we have to set some standards and criterias to be able to do so. (Example: 2500 Table legs, Model # 23432 in 100 hours production time in the quality of the sample given to the customer). Try to set a quality standard for each specific product. This is especially true if you were sending a sample to the customer. Once the customer accepted the sample, you have to keep this quality standard and you can not send him products with a lower standard. If you have a Quality Control Department in your company, try to work together with them, so that you know all the quality factors before you start the production of the item.

Measuring Performance

After setting the standards we can now record the results of the worker or production line. (After 50 hours production time, only 500 legs are finished, quality is lower than the sample).

Evaluating Performance

Now that we have our actual production results, we can compare them with the standards from before and we will find out whether we reached our production goals or not. (Evaluation compares standards with results: 500 legs finished after 50 hours = lower than the standard, quality is not as good as sample = lower than standard).

Taking Corrective Action

You have to take corrective action especially if you do not reach your production goals, meaning your production is too slow, the quality too low, etc.. Controlling and review procedures are essential for the implementation of plans. Without them you will never be able to tell whether you could accomplish the goals or not. The above mentioned production plan is already one very important tool for controlling because you can follow the production process on it and you can identify bottle necks and other problems.

How can you make your production faster?

- ➔ Training of workers
- ➔ Better machines and equipment
- ➔ Use of jigs
- ➔ Identify bottleneck in the production
- ➔ Allocate materials for each order right in time

If you are involved in costing, establish a proper post calculation process in order to check on the accuracy of your costing. Check on the physical accomplishments (number of work pieces, in specific time, in a certain quality) of the workers, it is an important thing to know about the efficiency of each single person in the production line. The easiest way is to evaluate a worker's data from his punsh card and the routing sheets.

3.2.2 Improving a process

3.2.2.1 The principle of continuous improvement
3.2.2.2 The process of contiuous improvement
3.2.2.3 Case study: Shortening customers' telephone waiting time
3.2.2.4 The idea of Total Quality Management

3.2.2.1 The principle of continuous improvement

Usually you look for a problematic area in your production to improve the working process. When the cause of a problem has been identified, and a "cure" found, it must be implemented and evaluated once again, to confirm that the solution is working. If not, the analysis starts once again. But if the cure was the right one and the problem was solved you stop thinking about it and consider it as a solved problem. That was the traditional way of handling situations like that. If you want to implement the idea of "continuous improvement" in the company your way of thinking has to change.

Reasons to implement
You might ask, if a problem has been fixed, why can't it be checked off the list of things to correct, and fogotten about? Because nothing is static: suppliers may change some aspect of their materials; equipment may develop problems that, however slight, affect output; technology may be upgraded, requiring new and different training, and so on. A modern company which considers Total Quality Management (TQM) should allow for this **ongoing cycle of continuous quality improvement**, a concept that Japan has been using for a long time but which is still quite a revolutionary idea to most western organisations.

Learning from the Japanese
The principle behind the continuous improvement is **Kaizen**, a Japanes term which can be translated:
#

Kai = change
Zen = good

Kaizen means improvement. Moreover it means continuing improvement in personal life, home life, social life, and working life. When applied to the workplace Kaizen means continuing improvement involving everyone - managers and workers alike.

Kaizen can be stated the following:

- "In its broadest sense, quality is anything that can be improved."
- "There is always a better way."
- "There is no acceptable best way."

It is through Kaizen that the processes which bring forth or sustain the product are made more competitive. If customer satisfaction (the larger the better) and cost (the smaller the better) are choosen as the primary quality characteristics, then the focus of workplace Kaizen is to improve value, and hence competitive advantage. Total Quality Control is the system to implement Kaizen.

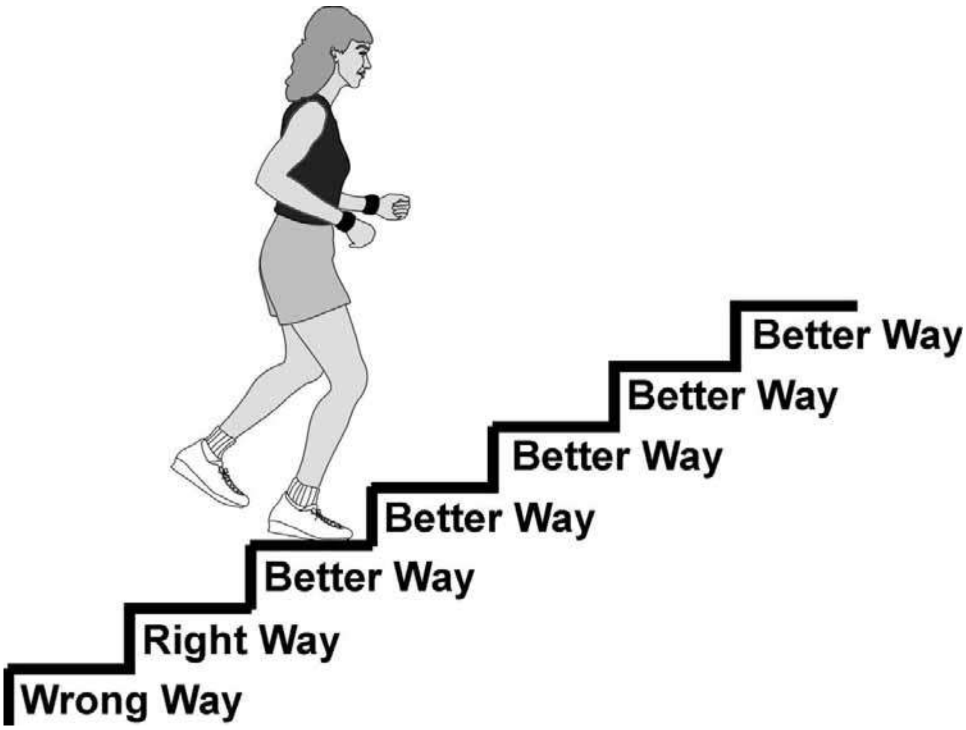

3.2.2.2 The process of continuous improvement

The Deming Wheel

The process of continuous improvement, called PDSA or, alternatively, PDCA (Plan/Do/Study or Check/Act), is often referred to as the *Deming Wheel*. The impact of Dr. Deming's teachings on American manufacturing and service organizations has been profound. He led a sweeping quality revolution that is improving the competitive position of the United States. Dr. Deming himself called the cyle the *Shewhart Cycle* (after its inventor, Dr. Walter Shewhart, a statistician and author of Statistical Methods from the Viewpoint of Quality Control), illustrated below:

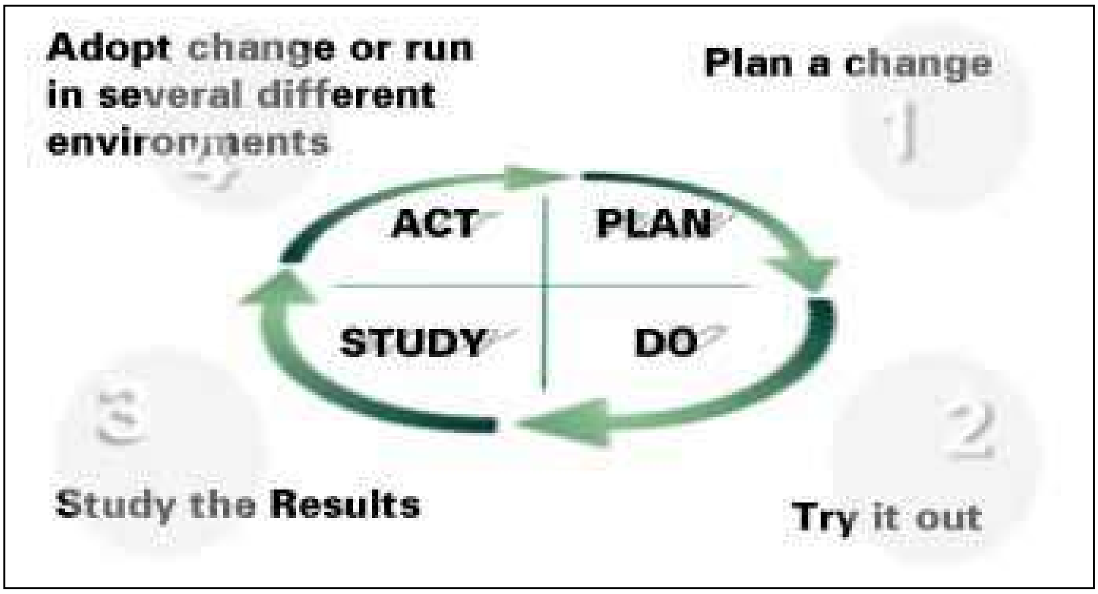

Continuous improvement focuses on examining the processes in an operation, to learn where mistakes are being made, why they are happening and if it is possible, practical and economically desirable to prevent them from recurring. Inspection has its place in this practice, but it is inspection of the process, not the product -- a principle in line with Dr. Deming's teachings.

So how do you improve a process?

1. **First, you need to recognize the problem**
   The recognition of a problem may come from internal (worker) or external (supplier/customer) sources. Both sources are invaluable, but unfortunately not all organisations provide feedback opportunities. Identify a problem area or the opportunity for improvement, the reason for working on it, and an indicator- with an emphasis on the customer-for measuring improvement.

2. Define and identify the problem

Then the process giving rise to the problem has, likewise, to be identified and documented. *Flow charts* often prove to be the most useful form of documentation, as they are geared to breaking any operational process down to its nuts and bolts. Break down the problem area to determine its subparts, identify the components with the most impact on the customer, clarify the problem statement, and set a target for improvement.

3. Measure and analyse the performance

Once a process has been documented, its performance can be measured and analysed. There are a number of methods available to do this, but the method used will be determined by both the type of measurements being taken and what is being analysed. Evaluate the information gathered, and identify and verify the root causes of the problem. Utilize cause and effect analysis and the questions, "What causes this?" and "Why does this condition exist?" to eliminate the problem's symptoms and identify the underlying or root cause.

4. Find a solution for the problem

Identify and select the proposed solutions or countermeasures to correct the root cause of the problem identified and verified in step 3. Evaluate potential countermeasures for effectiveness and feasibility, and support the one chosen for implementation with appropriate data such as cost-benefit analysis, barrier/aid identification, and an action plan to assure any barriers are overcome.

5. Implement and evaluate

Confirm that the problem and its root causes have been identified, countermeasures implemented, and the problem decreased and the target for improvement met. Assure that once a problem and its root causes have been identified and countermeasures implemented, the problem doesn't reoccur. Once the data obtained confirm that the countermeasures have been successful, the improvement can be standardized, using control charts and/or standards or procedures. Replication should be utilized where the results are successful and can be shared with other areas doing similar work.

6. Evaluate

Decide what will be done with any future problems, evaluate the team's effectiveness and lessons learned, and develop an action plan for remaining problems. This step identifies the Deming Wheel as a tool, which should continue to be used to evaluate the problem and any changes in circumstances. By continually turning the wheel, adjustments can be made as circumstances change.

3.2.2.3 Case study: Shortening customers'telephone waiting time

This is the story of a Quality Control program that was implemented in the main office of a large bank. An average of 500 customers call this office every day. Surveys indicated that the callers tended to become irritated if the phone rang more than five times before it was answered, and often would not call the company again. In contrast, a prompt answer after just two rings reassured the customers and made them feel more comfortable doing business by phone.

1. **Selection of a Theme.**

   Telephone reception was chosen as a QC theme for the following reasons: (1) Telephone reception is the first impression a customer receives from the company, (2) this theme coincided with the company's telephone reception slogan, "Don't make customers wait, and avoid needless switching from extension to extension", and (3) it also coincided with a company-wide campaign being promoted at that time which advocated being friendly to everyone one met.

   First, the staff discussed why the present method of answering calls made callers wait. Figure 3.1 illustrates a frequent situation, where a call from customer B comes in while the operator is talking with customer A. Let's see why the customer has to wait.

   At (1), the operator receives a call from the customer but, due to lack of experience, does not know where to connect the call. At (2), the receiving party cannot answer the phone quickly, perhaps because he is unavailable, and nobody can take the call for him. The result is that the operator must transfer the call to another extension while apologizing for the delay.

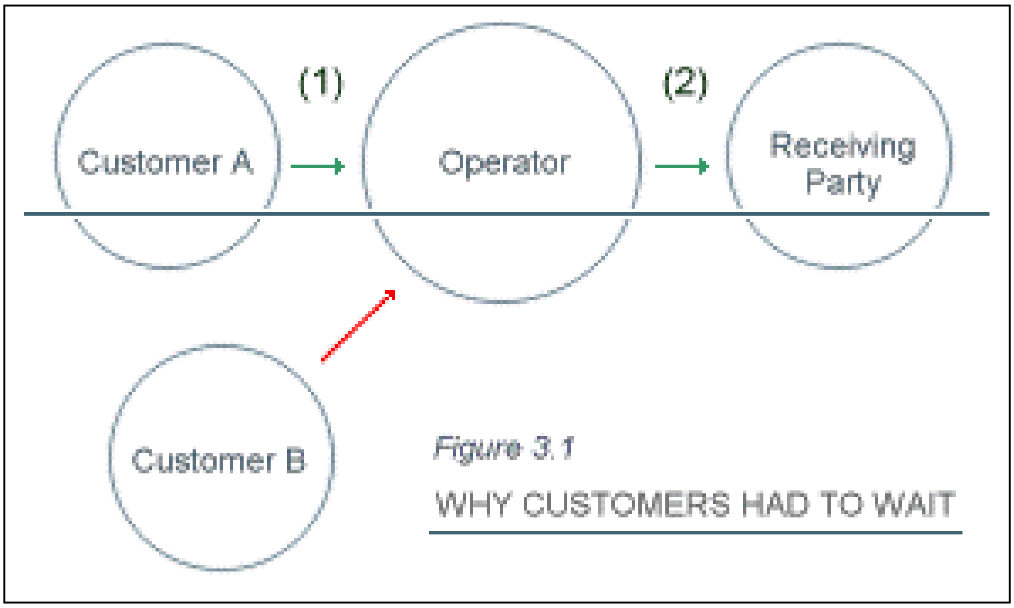

Figure 3.1

WHY CUSTOMERS HAD TO WAIT

2. Cause and Effect Diagram and Situation Analysis

In order to fully understand the situation, the circle members decided to conduct a survey regarding the callers who waited for more than five rings. Circle members itemised factors at a brainstorming discussion and arranged them in a cause-and-effect diagram (Figure 3.2). Operators then kept check sheets on several points to tally the results spanning 12 days from June 4 to 16. (See Figure 3.3.)

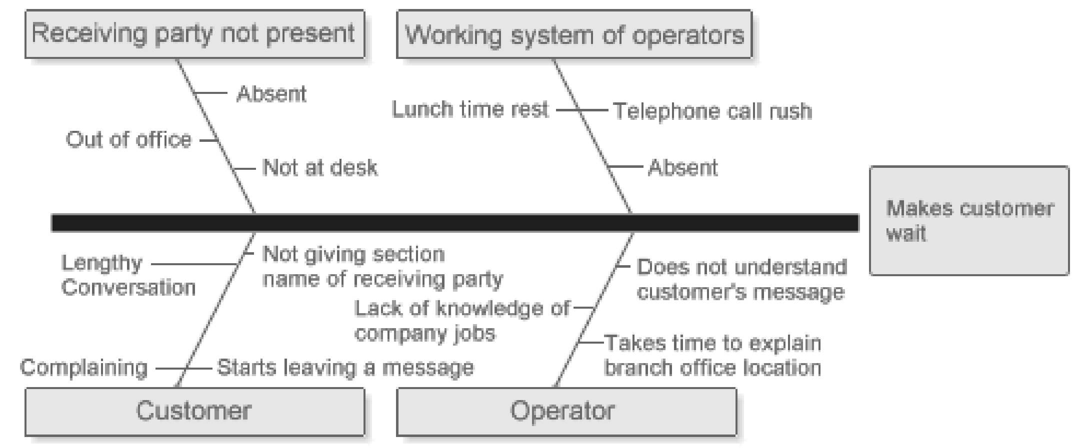

Fig. 3.2 Cause and Effect Diagram

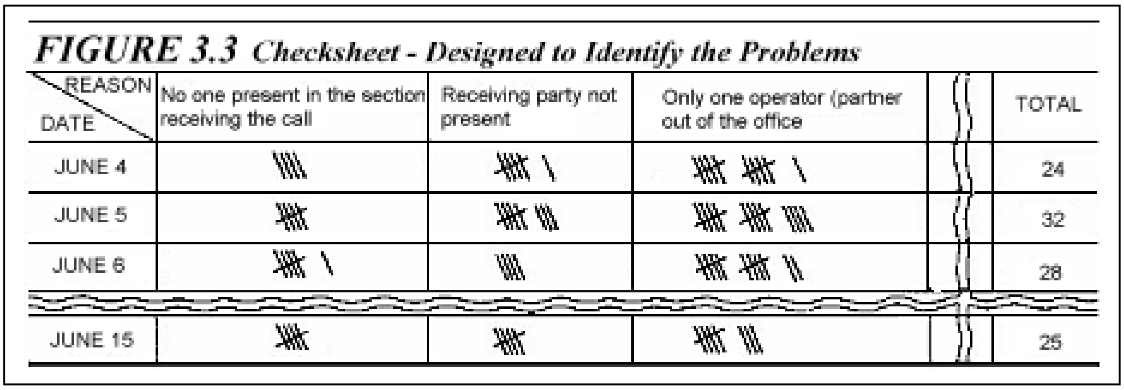

FIGURE 3.3 Checksheet - Designed to Identify the Problems

REASON / DATE	No one present in the section receiving the call	Receiving party not present	Only one operator (partner out of the office		TOTAL
JUNE 4					24
JUNE 5					32
JUNE 6					28
JUNE 15					25

3. Results of the Checksheet Situation Analysis

The data recorded on the checksheets unexpectedly revealed that ‘one operator (partner out of the office)’ topped the list by a big margin, occurring a total of 172 times. In this case, the operator on duty had to deal with large numbers of calls when the phones were busy. Customers who had to wait a long time averaged 29.2 daily, which accounted for 6% of the calls received every day. (see figures 3.4 and 3.5)

FIGURE 3.4 ***Reasons Why Callers Had to Wait***

		Daily average	Total Number
A	One operator (partner out of the office)	14.3	172
B	Receiving party not present	6.1	73
C	No one present in the section receiving the call	5.1	61
D	Section and name of receiving party not given	1.6	19
E	Inquiry about branch office locations	1.3	16
F	Other reasons	0.8	10
	Total	29.2	351

Figure 3.5

Reasons why callers had to wait. (Pareto Diagram)

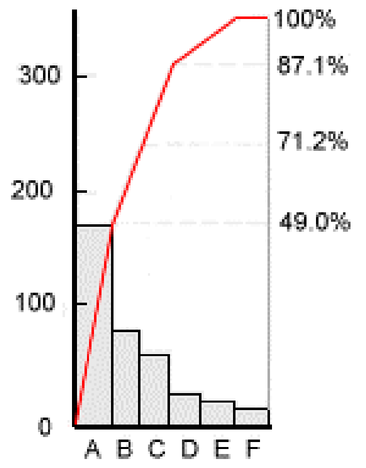

4. Setting the Target
After an intense but productive discussion, the staff decided to set a QC program goal of reducing these waiting callers to zero. That is to say that all incoming calls would be handled promptly, without inconveniencing the customer.

5. Measures and Execution.
(1) Taking lunches on three different shifts leaving at least two operators on the job at all times. Up until this resolution was made a two-shift lunch system had been employed, leaving only one operator on the job while the other was taking a lunch break. However since the survey revealed that this was a major cause of customers waiting on the line, the company bought in a helper operator from the clerical section.
(2) Asking all employees to leave messages when leaving their desks. The objective of this rule was to simplify the operator's chores when the receiving party was not at his desk. The new program was explained at the employees' regular morning meetings, and company-wide support was requested. To help implement this practice, posters were placed around the office to publicize the new measures.
(3) Compiling a directory listing of the personnel and their respective jobs. The notebook was specially designed to aid the operators, who could not be expected to know the details of every employee's job or where to connect his incoming calls.

6. Confirming the Results.

Although the waiting calls could not be reduced to zero, all items presented showed a marked improvement as shown below. The major cause of delays, ‘one operator (partner out of the office)," plummeted from 172 incidents during the control period to 15 in the follow-up survey.

FIGURE 3.6 Effects of QC (Comparison of Before and After QC)

	Reasons why callers had to wait	TOTAL NUMBER BEFORE	TOTAL NUMBER AFTER	DAILY AV. BEFORE	DAILY AV. AFTER
A	One operator (partner out of the office)	172	15	14.5	1.2
B	Receiving party not present	73	17	6.1	1.4
C	No one present in the section receiving the call	61	20	5.1	1.7
D	Section and name of receiving party not given	19	4	1.6	0.3
E	Inquiry about branch office locations	16	3	1.3	0.2
F	Other reasons	10	0	0.8	0
	Total	351	59	29.2	4.8

Period: 12 days from Aug. 17 to 30.

FIGURE 3.7

Effects of QC (Pareto Diagram)

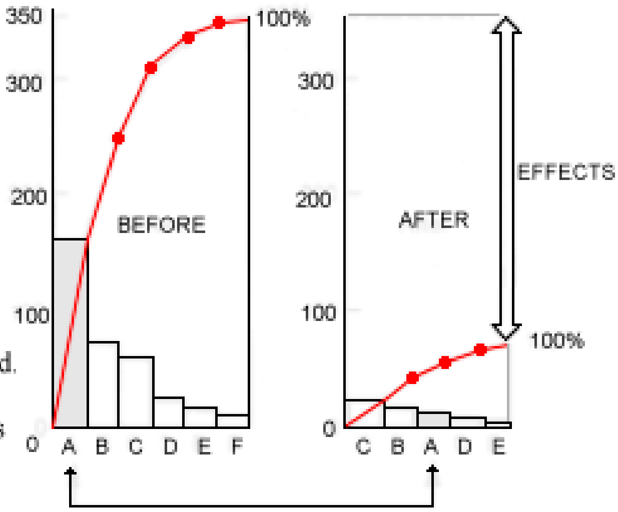

Problems are classified according to cause and presented in order of the amounts of time consumed. They are illustrated in a bar graph. 100% indicates the total number of time consuming calls.

from 'The Quest for Higher Quality - the Deming Prize and Quality control," Ricoh Company Ltd.

3.2.2.4 The idea of Total Quality Management

Total quality management is a holistic, dynamic approach to management. It involves all of the aspects of quality, but takes them further and integrates them completely into an organisation. TQM focuses on:

- Customer satisfaction.
- Involvement
- Continuous improvement.

Customer satisfaction.

Whether the customer is external or internal to the company, this is what keeps a company in business. Marketing departments often take on the task of determining what the customer wants, via methods such as customer surveys. But surveys may have design pitfalls: if you don't ask the right questions, you won't get the right answers. TQM must consider both current and future customer needs, while keeping in mind such possibilities as the development of new products that customers might not think of on their own but which they would respond positively to.

Involvement.

To achieve TQ, everyone in an organisation must be committed. Achieving this commitment is not easy and takes a long time. This is why most authors suggest that organisations need strong leadership and commitment from the top. Companies use mechanisms such as Quality Circles (which nowadays are cross-functional teams that meet regularly) and suggestion schemes to include people in the TQ objective. However, if these are not complete with training and information sharing, they won't work. The best results come when people work on issues which are relevant to them, using techniques they are familiar with, and they have the responsibility and often the resources to effect changes. Prior to practical and effective implementation of the TQ the following breakthrough concepts are necessary:

- Change the way of thinking of the individual
- Change the way of doing things in the company

Continuous improvement

In the ideal TQM environment, all processes are constantly under examination, and everyone in the company is committed to the concept of continuous improvement. If an organisation recognises that analysis and improvement of processes must be never-ending in order to achieve and retain customer satisfaction, provides avenues for both customer and employee feedback, and uses all the quality tools available, Total Quality Management can be realised.

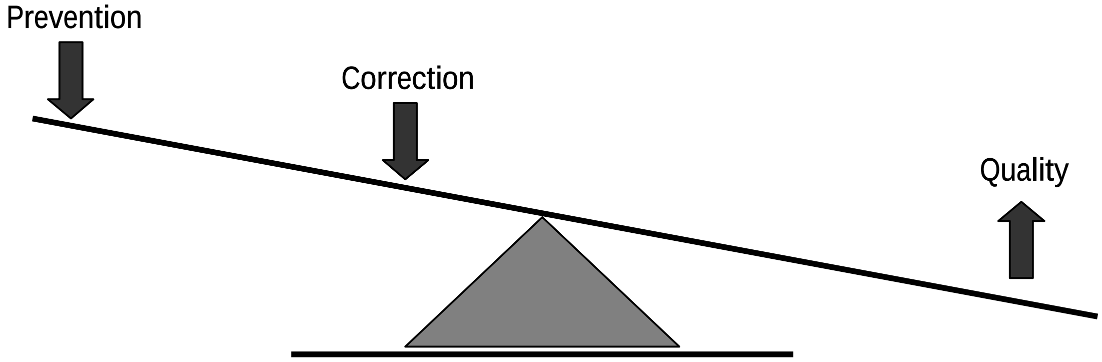

3.2.3 Reducing costs

3.2.3.1 Different kind of costs

Costing is a very complex and sensible topic in managing a business. In this supervisory module we cannot cover the whole area of costing because this subject would cover a complete seminar by itself. But as a supervisor you should have in general a good understanding of the different kind of costs you will find in any company or workshop. Without this knowledge you will not be able to calculate properly or to recognize areas where you could reduce costs. You should identify the difference between direct costs and overhead costs.

Direct costs: Can be related directly to a job order. Direct work, materials, etc.
Overhead costs: Can not be related directly to a job order. Insurances, repairs, rents, etc.

To look more specific at different kinds of costs which play an important role in the workshop we have to divide them further. Mainly you have to deal with three types of cost:

- Material costs
- Production costs
- Overhead costs

Material costs
The material costs contain actually of two different kind of costs. One is easy to understand: the material costs are the costs for producing a specific item (direct costs). So the costs are directly related to a job order. But materials also causes overhead costs like storage, administration, work that you have during ordering materials, etc.. If we talk about real material costs we have to consider that they should consist of the two different types mentioned above, the direct and the overhead costs of material. Therefore your selling price for a specific material cannot be the same than the one you payed your supplier. Usually the management provides you with the material costs you have to use if you are the one the make a calculation.

Production costs
The production costs are all the costs created through work in the production for one job order. They can be related directly to the job order and include the work on machines, work done manual with hand tools, the set-up for the machines etc.. To determine the production costs you have to know the different machine rates you have to relate to each machine, the rates for the workers and the exact time for each operation. Production costs are also direct costs. A lot of companies include in the production costs the overhead costs for the machines and hand tools. Then the production cost is also a combination of direct and overhead costs for production. If your company don't do it this way, you have to include these overhead costs in the general overhead rate.

Overhead costs

As mentioned before overhead costs are no direct costs, which means you cannot relate them to a job order. To run a company you have to pay a lot of additional costs such as SSS, taxes, insurances, rents, electricity, administration costs, repairs, maintenance, payment of interest, depriciation costs, vacation allowance, etc.. But nevertheless somehow the money for the overhead costs has to be earned. So you have to include these expenses partly in the costs for producing a job order/product. This is usually done by an overhead rate (in per cent) which you add to the production and material costs of a product.

Reducing costs

Since you are now familiar with the different types of costs you can determine in which area you can mostly influence the saving of costs:

	Material costs	Production costs	Overhead costs
Measures how to reduce the costs	➲ Proper storage of material should be implemented. ➲ Implement measures that reduce the waste material. ➲ Prepare effective cutting lists/schemes that consider the measurement of the raw material. ➲ Train the staff in not wasting materials.	➲ Follow the 5 S program, which enhance the cleanliness and order in the workshop. ➲ Train your staff regularly in all necessary areas. ➲ Provide regular maintenance to secure effectivly running machines. ➲ Shorten the set-up times by improving the way of doing it (training, specialize staff). ➲ Use always sharp tools. ➲ Prepare good jigs and other devices which will speed up the production ➲ Take care of right-in-time delivery of the materials. ➲ Always try to avoid bottle-necks. ➲ Make a proper production plan which you revise every day. ➲ Follow safety instructions, accidents do not speed up the production!	➲ Provide regular maintenance that will lower the costs for expensive repairs. ➲ Save energy whenever you can (electricity, fuel,...). ➲ Insist on following all necessary saftey instructions so that there will be no accidents.

3.2.3.2 Basis for proper calculations

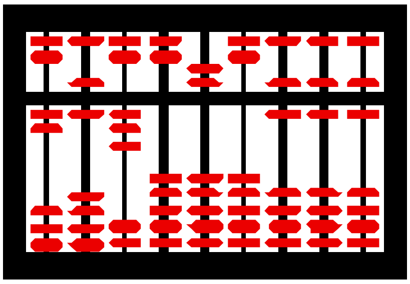

If you as a supervisor are also responsible for preparing calculations for new items you need a specific knowledge for doing it. But you also need specific information from your management or your superior. Without these information you will not be able to come up with a proper costing.

The management should provide you with the following:

- ☐ Technical drawing of the item (or a sample)
- ☐ Specification of material, hardware and the quality standard (or a sample)
- ☐ Quantity of items that should be produced
- ☐ Machine rates for each machine in the workshop
- ☐ Operator rates (if they are not included in the machine rates)
- ☐ Material costs

With these information you can come up with the cost of sales for an item. If they expect you to give the net amount, you need the margin and the overhead rates they ususally add to the cost of sales.

Machine rates

The correct computation of the machine rates does not belong to your responsibilies, since it is a very complicated business management skill and usually done by specialized personnel like plan managers. They have to consider for example the depreciation, the interest and the expenses for the machine in relation to the space it requires and also the extimated operating life for a year.

Technical knowledge in woodworking

In general you need a lot of technical knowledge for preparing a calculation. You have to be able to perform the following:

- ➔ Interpret technical drawings properly.
- ➔ Recall the different materials and the hardware.
- ➔ Memorize the operations of all woodworking machines.
- ➔ Recognize the fastest production processes.
- ➔ Describe the working process step by step.
- ➔ Predict possible bottle-necks.
- ➔ Estimate the time for each working operation.
- ➔ Consider and estimate set-up times for each machine.

Measuring of materials

The first step for making a calculation is to determine the need of the different materials. We usually prepare a **cutting list** and an additional **list for accessories** such as hardware. For the accessories list you have to check not only for the supplier but also if the items are available in time. A cutting list is not only used for calculation but also afterwards in the production process. Below you can see an example for a very detailed cutting list, which provides all the necessary information for calculation and production process. The use of the metric system in your workshop should be trained and carried out since it is already an international standard.

Item:		Order number:
Customer:		Date:

Cutting List (including computation)

1	2	3	4	5	6	7	8	9	10	11	12	13	14
No.	Part	Material	No. of pieces	Length mm	Width mm	Thickn. mm	Area m^2		Volume m^2	Waste	Vol. + Waste	Price m^2	Price
1	Leg	Gimelina	4	477	50	50	0,10	60		40	0,14	162,-	22,68
2	Rail	Gimelina	2	1130	10	50	0,02						
2	Rail	Gimelina	2	630	10	50	0,01	60	0,03	150	0,08	162,-	12,96

Title of column		Comment
1.	No.	Number of the item
2.	Part	Name and use of the different parts of the item (Leg, rail, profile,...)
3.	Material	Type of the solid timber, of the wooden material, quality standard
4.	No. of pieces	Number of the same pieces
5.	Length	Exact measurement (length) of the finished item in mm
6.	Width	Exact measurement (width) of the finished item in mm
7.	Thickness	Exact measurement (thickness) of the finished item in mm
8.	Area	Surface area: length x width x number of pieces
9.	Raw thickness	Thickness of material when it comes from lumber yard
10.	Volume	Volume in m^2
11.	Waste Material	Waste in per cent, specified from the company for each material
12.	Vol. + Waste	Volume plus waste amount to the volume needed (in m^2)
13.	Price m^2	Price per m^2 for solid timber, wooden materials, or veneers
14.	Price	Price for the computed items

With a complete cutting list you can compute the material costs for your job order.

Determination of time

The second step for making a calculation is to determine the time that is needed for each working operation. You need this for the computation of the costs of production. The more experience you have in the production process the easier it will be for you to estimate the time for a working procedure. The scheme for the determination of working time is the following:

- ➔ Define the different steps of work to be done in the correct order
- ➔ Fix the appropriate machines you want to use
- ➔ Determine the amount of work (number of pieces, m^2, etc.)
- ➔ Consider the time for the machine set-up
- ➔ Compute the time for each working process based on your experience
- ➔ Add a percentage for transportation inside the workshop

When you have gathered these information you can prepare with the help of machine rates and operator rates the **costs of production**. But you can also use the information for the preparation of **routing sheets** and your further production planning process since they are vital for the production process.

Machine set-ups

A special cost factor is the time for the set-up of machines. The lower the number of items you have to produce the more important are the costs for the set-ups. It is advisable in general to lower the time for machine set-ups as much as possible to minimize the costs in production. Below you find some measures for lowering the time for machine set-ups:

- ☐ Look for set-up "friendly" machines when you buy a new one
- ☐ Train your staff in setting up all the machines
- ☐ Store tools and devices for set-ups clearly arranged and close to the machine
- ☐ Use fences, jigs and measuring devices
- ☐ Use only carbide tipped tool since they last much longer
- ☐ Specialize some workers for complicated and costly set-ups
- ☐ Very frequent set-ups can be avoided by buying a second machine of the same type
- ☐ Pay attention to the need of only a few set-ups during the design process of a product (choose suitable measurments)

The time you need for the most frequent set-ups can be determined by time and motion studies so that you have a proper estimation for the duration of them.

To have an overview of the basis for proper calculations look at the picture below. You as a supervisor can be responsible for determining the material and the production costs as long as you get the required information form your superior. For coming up with the cost of sales or even the net amount of an item you need to know what the overhead rates and the margin are.

Basic Scheme for Calculations

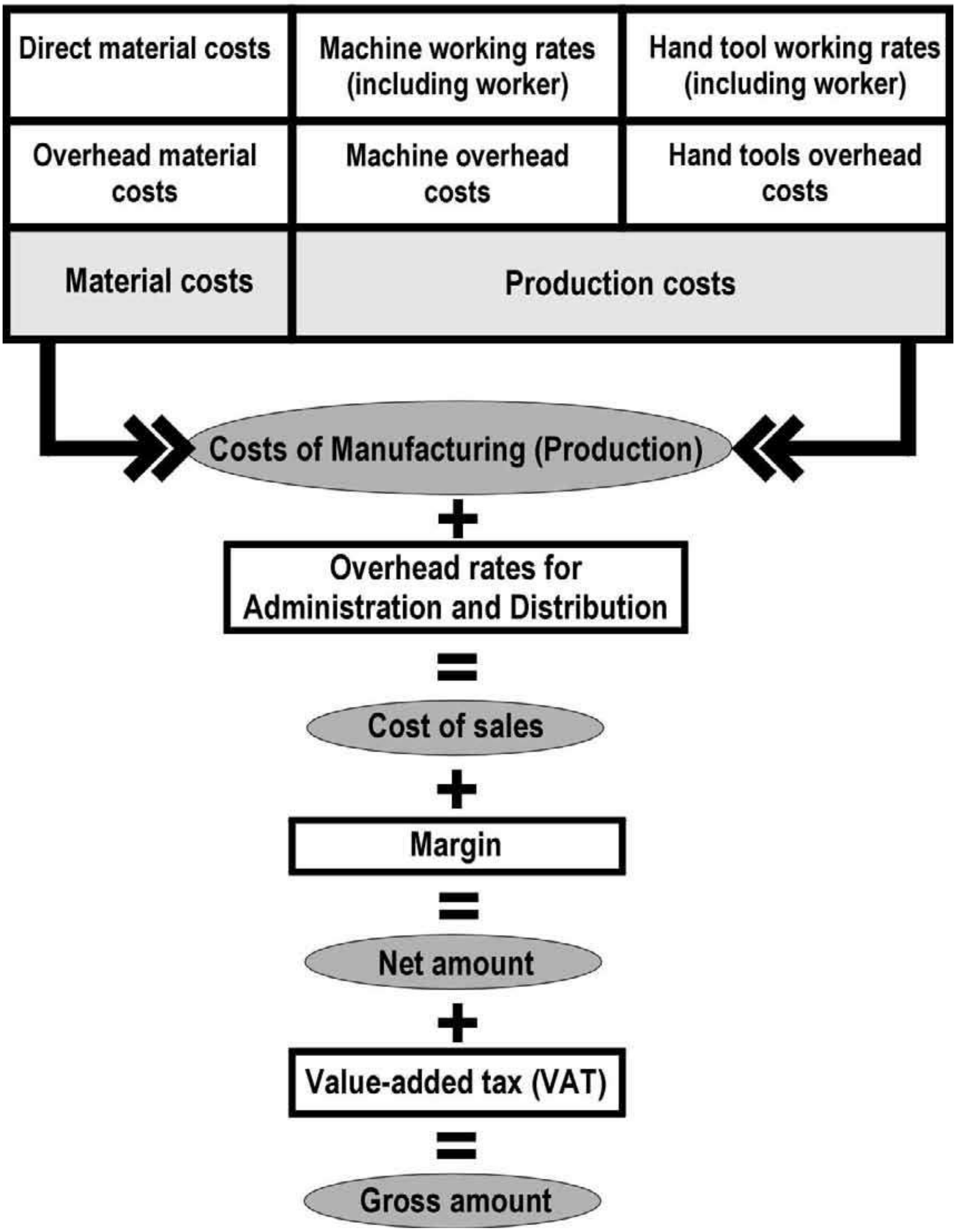

Let us have a look at a example. Here you can see the composition of the **cost of sales** for a product and how to come up with a **gross amount** the customer has to pay.

Composition of a Price

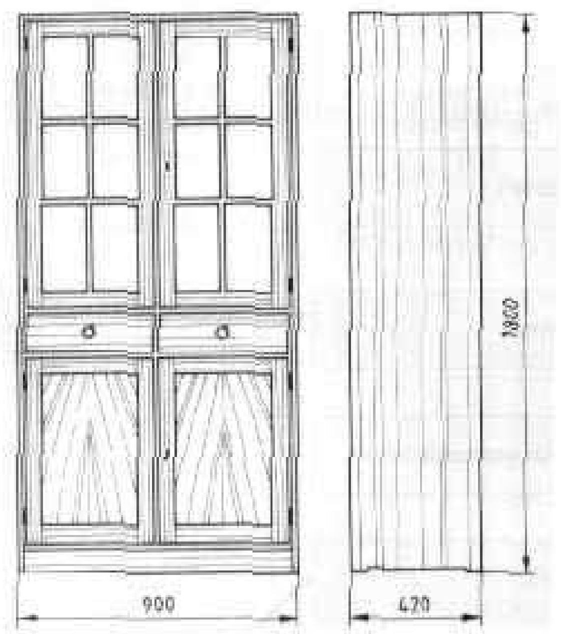

Solid timber: Mahagoni
Finish: Matt Finish
Gross amount: 156,080.00 Pesos

Cost of Sales: 100% (122,800 Pesos)

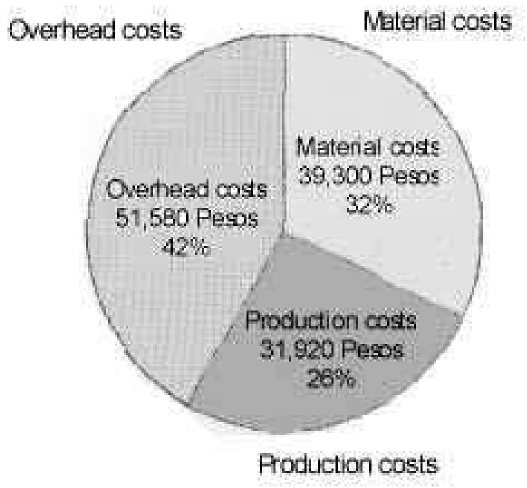

Material costs 39,300 Pesos 32%	Chipboard Solid timber Veneer Plywood Glue, screws Hinges Laquer, etc.
Production costs 31,920 Pesos 26%	Machine rates Operator rates
Overhead costs 51,580 Pesos 42%	Taxes Insurances Administration cost Rents Electricity Maintenance Repairs Depreciation Interest, etc.
Margin 13,540 Pesos 11%	Rate to cover risks and for further investments
VAT 20,460 Pesos 15%	Value added tax

<u>SELLING PRICE</u>
(Gross amount)

Example for a Technical Drawing

Technical drawing for an entrance door

All measurements in mm

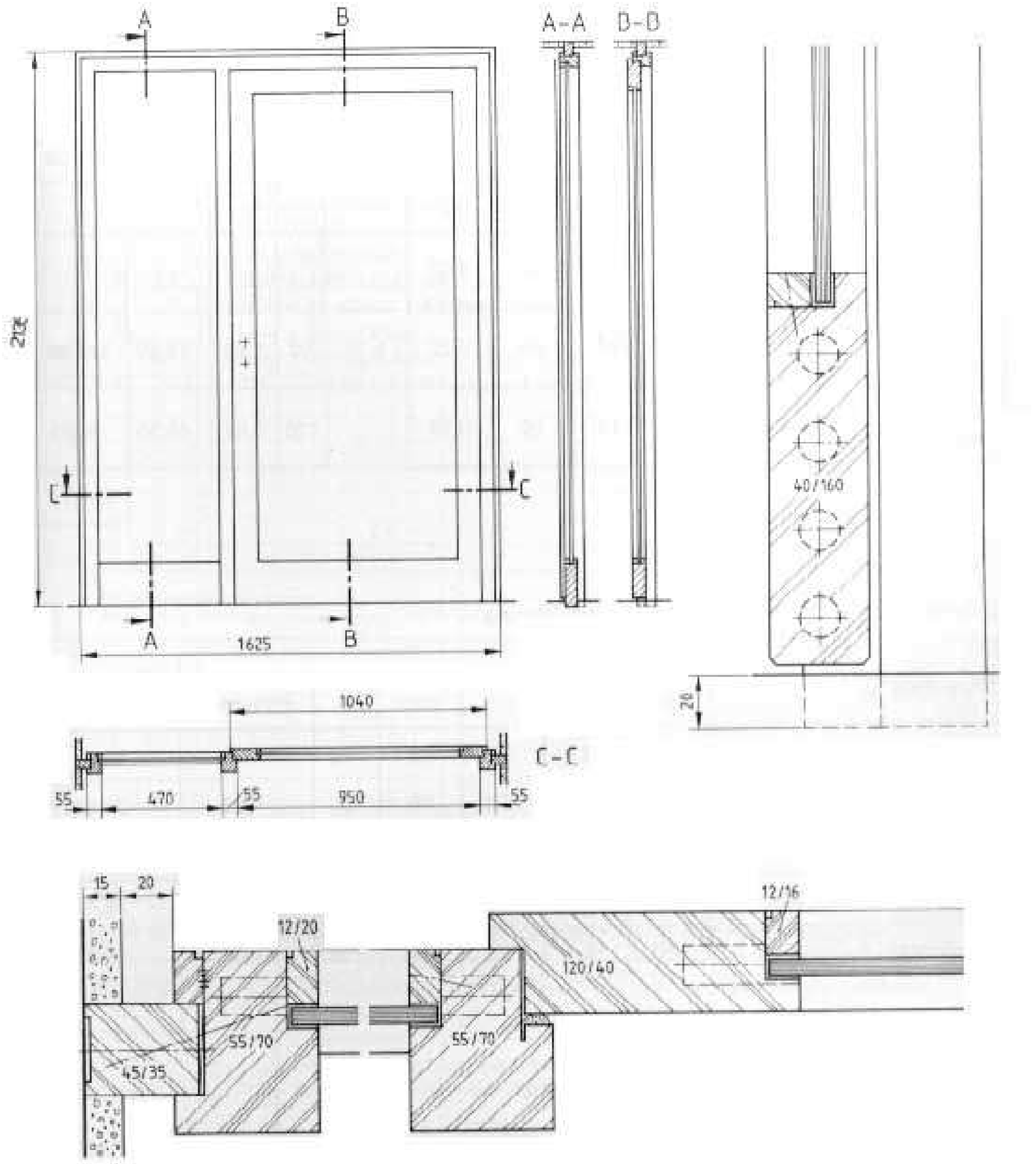

Overall measurment: 1625 x 2135 mm
Solid timber: Philippine Mahagoni
Finish: Polyurethan laquer, glossy
Joints: Dowel
Glass: Security glass, 12 mm

Form for a Cutting List

Part No.	Part Name	Material Used	Rough Dimensions			Final Dimensions			No. of Pieces	Cost / Unit	Material Cost
			Length	Width	Thickn.	Length	Width	Thickn.			
									Total Cost:		

Form for a Routing Sheet

Company Name

ORDER ID	

ROUTING SHEET FOR: (Part Name)

CUSTOMER	
ORDER ITEM	
ORDER QTY	
MATERIAL	
NO. OF PIECES	

LENGTH ROUGH/FINAL			
THICKNESS			
WIDTH			

DRAWING NO.	

Process No.	Equip-ment used	Process Description	Time (min)	Setup Time (min)	Jigma-king (min)	Worker ID	Date	Addit. Worker	Actual Time Needed	Qty. Bal.	Worker Sign.
1											
2											
3											
4											
5											
6											
7											
8											
9											
10											
11											
12											
13											
14											
15											
16											
17											
		TOTAL:									

Form for a Calculation Sheet

Company Name				ORDER ID	
PRECALCULATION SHEET		for Item:			
Customer:				Material:	
Adress:				Drawing No:	
				Quantity:	
Material Costs					
Material Overhead		%			
(Plus)					
Production Costs	Prod.	Mach.	Worker	Mach . Rate	
(Machine/Section)	(hrs.)	Rate	Rate	incl. Wages	
(Equals)					
Total Production Costs					
(Plus)					
Administration Overh.		%			
Sales Overheads		%			
Product Developm. Overh.		%			
(Equals)					
Total Costs					
(Plus)					
Mark up		**%**	(Total Cost / ((100 - Mark Up)*.01))		
(Equals)					
Retail Price					
Profit		Peso			

3.2.4 Daily Routine Activities

5. 1. 0. Before Start of Shift (15 – 30 minutes)

- Check production schedule and/or work orders for the day
- Check equipment to be used
- Check supply of materials for the day
- Check tools needed for the day
- Line up equipment, materials, and tools for the day
- Line up firm work schedule for the day

5. 2. 0. Beginning of the Shift (15 – 30 minutes)

- Check attendance and assign employees to work stations, get support from your "group leaders"
- If necessary (because of absences), balance the work force by changing assignments or by securing additional help from other departments (discuss with management)
- Assign production and/or work orders
- Stress critical qualities to watch
- Specify when the work should be completed

5. 3. 0. During the Shift (6 – 7 hours)

- Check workmanship with each employees, approve, correct, instruct or train as needed
- Check work progress with each employee. Add help, allow more time, or assign additional work
- Check housekeeping, this is a continuos process! Good work cannot be done in an untidy place!
- Check back when production or quality appears unsatisfactory, especially with new employees
- Stay on the shop floor supervising and/or available for questions, assistance, and instructions most of the time
- Be on the floor immediately before and after breaks and for 15 minutes before quitting time
- Inspect critical quality areas as work progresses. Correct problems as soon as they are detected
- Perform final inspection of parts, subassemblies, and so on, before they move to next department (if possible, get group leaders involved)
- Check/Report/Conduct a study on recurring quality problems
- Check periodically to see that materials and supplies are on hand
- Check periodically to see that tools and equipment are in proper operating condition
- Report material shortages or recurring defects
- Report and/or request maintenance, repair, or replacement of defective tools or equipment

5. 4. 0. Once a Day

- Observe one employee or work station continuously for 15 minutes
- Look for time wasted, dull or improper tools, need for work positioning jigs and fixtures, interference, delays and bottlenecks, and expenditure of excessive time to get parts and materials. Do find ways to cut costs or make improvements in any of these

5. 5. 0. End of Shift (15 minutes)

- Make a list of unsolved problems that came up during the day. Consider ways to handle them
- Think about jobs that have to be done the following day / shift like checking production and/or work orders, materials and tools
- Complete all paperwork. Avoid holding any paperwork for the following day.
- Make a list of jobs that must be done the next day. Take it home with you and complete it before coming to work. Use this form to make your own daily plan!

TRADITIONAL QUALITY CONTROL

Under traditional quality control, inspection of goods and services (checking to make sure that what's being produced is meeting all expectations) takes place at the end of the operations process. The problem with this sort of inspection is that it doesn't work. It won't ensure quality, however you define it. Think about a simple test, like the F-Test, that shows how difficult it is to realise a specific sign or characteristic in a limited time range. Imagine how much more difficult inspection is at the end of a process for a product with several hundred or thousand parts, such as a car -- or a forklift.

There are three main problems with inspection under traditional quality control:

- it's **costly**, in terms of both tangibles and intangibles (e.g. materials, labour, time, employee morale, customer goodwill, lost sales)
- it's **done too late in the process**, often resulting in defective or non-acceptable goods actually being received by the customer
- it's **done by the wrong people**--by separate "quality inspectors" rather than by the workers themselves

Another problem with inspections is often the lack of operational definitions between upper management and "quality inspectors", inspectors and workers, and even between inspectors, as to what constitutes a "quality product". For example, to meet quotas, inspectors may approve goods that don't meet 100% conformance, giving the message to workers that it doesn't matter if their work is a bit slipshod here and there. Or one inspector may be following different procedures from another, or using different measurements.

According to one of the quality "gurus", W. Edwards Deming,

> **"Inspection with the aim of finding the bad ones and throwing them out is too late, ineffective, costly. Quality comes not from inspection but from improvement of the process."**

To prove his point, Dr. Deming would demonstrate the "red bead test" in his lectures:

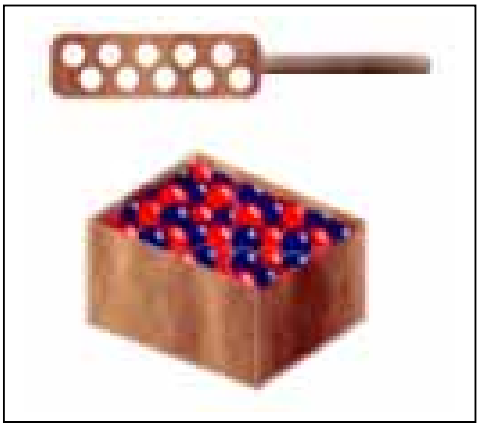

Audience members would be selected to perform one of several roles in a business (worker, inspector, or foreman). The "workers" would be supplied with raw materials (red and white beads, mixed together in a large container) and equipment, in the form of a paddle with 50 holes in it. The beads would be poured into a smaller vessel, then back into the larger vessel to simulate a production process; and then each worker would dip the paddle into the vessel, filling each hole with a bead. This would represent one day's production for each worker. Inspectors counted each red bead in the paddle as a defect, and records were kept for each "worker". Low number of total defects, over several days, might result in promotions or pay raises, while a high number might result in dismissal.

It doesn't take the workers long to realize that it is random luck, not their innate skill or ability to learn, that determines the number of "defective" red beads that end up in the paddle. Under the conditions given, every worker will experience good (fewer red beads) and bad (more red beads) days, without any means to tip the scales to their advantage. Nor would any amount of inspection have an affect. The only thing that could lead to improvement would be to improve the process -- i.e., reduce the number of red beads in the incoming material -- and that would be management's job, not the workers. In Deming's view, **management is responsible for 94% of quality problems**.

Other quality experts, like J.M. Juran, think that there is a place for inspection in a quality process -- just not the traditional method. Inspection occurs at varying places "upstream" in the process, right from the point of incoming materials, in order to detect and correct errors long before the final product emerges. This is usually much less costly than having to scrap or rework final products that don't conform or are judged unfit for use. Juran also supported the concept of workers being allowed to self-inspect their work, given the appropriate information and tools to do so.

TOTAL QUALITY CONTROL

Total quality control focuses on examining the processes in an operation, to learn where mistakes are being made, why they are happening and if it is possible, practical and economically desirable to prevent them from recurring. Inspection has its place in TQC, but it is inspection of the process, not the product -- a principle in line with Dr. Deming's teachings.

So how do you improve a process?

1. First, you need to recognize the problem
   The recognition of a problem may come from internal (worker) or external (supplier/customer) sources. Both sources are invaluable, but unfortunately not all organisations provide feedback opportunities.

2. Define and identify the problem
   Then the process giving rise to the problem has, likewise, to be identified and documented. *Flow charts* often prove to be the most useful form of documentation, as they are geared to breaking any operational process down to its nuts and bolts.

3. Measure and analyse the performance
   Once a process has been documented, its performance can be measured and analysed. There are a number of methods available to do this, but the method used will be determined by both the type of measurements being taken and what is being analysed. For example, *control charts* using can provide a highly effective visual indication of the points where a process is not in control, as well as when corrective action should or should not be taken. Deming and other quality "gurus" teach that some variation in a process is inevitable and is not cause for concern, but it should be held to a minimum in most cases. *Pareto analyses* arrange data in order of priority or importance, and often reflect a high percentage of problems arising from a few causes (the "vital few"). *Fishbone diagrams* concentrate on one problem effect (result), and attempt to show all the causes contributing to it which may be negatively affecting it.

THE SEVEN QUALITY CONTROL TOOLS

1. Cause and Effect Diagram

The cause and effect diagram is also called the fishbone chart because of its appearance and the Ishakowa chart after the man who popularized its use in Japan. Its most frequent use is to list the cause of particular problems. The lines coming off the core horizontal line are the main causes and the lines coming off those are sub causes.

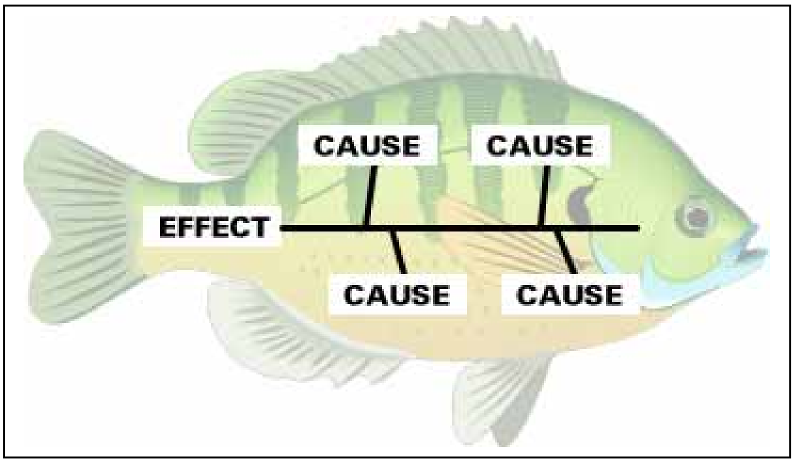

A CAUSE AND EFFECT DIAGRAM IS USED FOR:

1. Identifying potential causes of a problem or issue in an orderly way (example: Why has membership in the band decreased?; why isn't the phone being answered on time?; why is the production process suddenly producing so many defects?)
2. Summarizing major causes under four categories (e.g., People, Machines, Methods, and Materials or Policies, Procedures, People, and Plant)

STEPS IN CONSTRUCTING A CAUSE AND EFFECT DIAGRAM:

1. Prepare a flip chart or an overhead transparency of the following template:

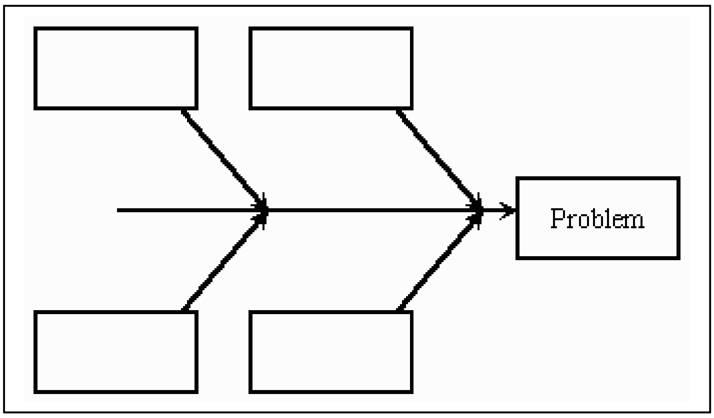

2. Write the issue (problem or process condition) on the right side of the Cause and Effect Diagram.
3. Identify the major cause categories and write them in the four boxes on the Cause and Effect Diagram. You may summarize causes under categories such as:

- Methods, Machines, Materials, People
- Places, Procedures, People, Policies,
- Surroundings, Suppliers, System, Skills

4. Brainstorm potential causes of the problem. As possible causes are provided, decide as a group where to place them on the Cause and Effect Diagram. It is acceptable to list a possible cause under more than one major cause category.
5. Review each major cause category. Circle the most likely causes on the diagram.
6. Review the causes that are circled and ask "Why is this a cause?" Asking "why" will help get to the root cause of the problem.
7. Reach an agreement on the most probable cause(s).

2. Run Chart

The run chart shows the history and pattern of variation. It is helpful to indicate on the chart whether up is good or down is good. This tool is used at the beginning of the change process to see what the problems are. It is used at the end (check) part of the change process to see whether the change has resulted in a permanent improvement.

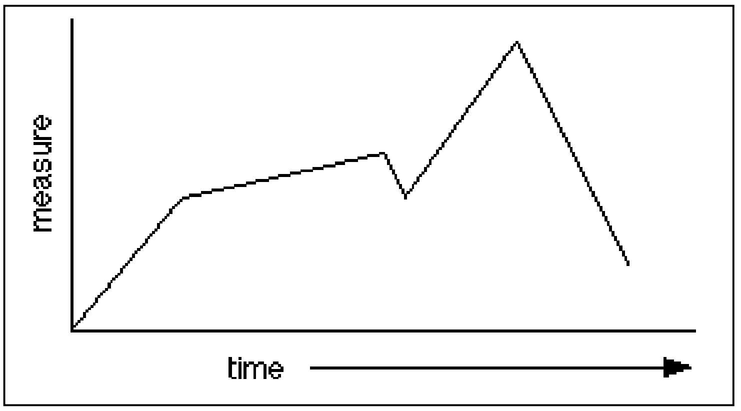

3. Scatter Diagram

The scatter diagram show the pattern of relationship between to variables that are thought to be related. For example is their a relationship between out side temperature and cases of the common cold? As temperatures drop, do colds increase. The closer the points hug a diagonal line the more closely there is a one to one relationship.

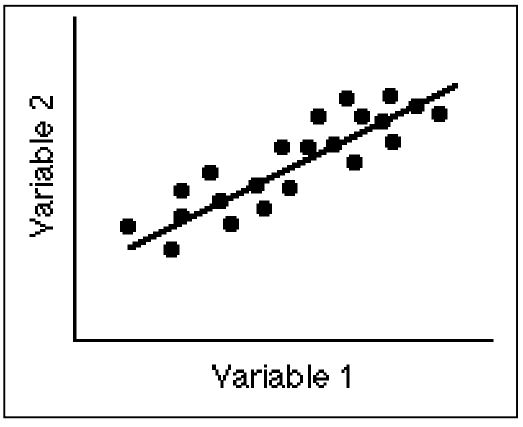

4. Flowchart

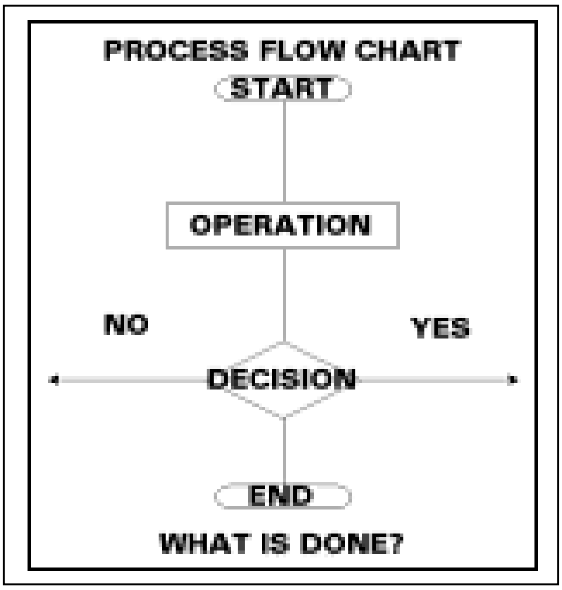

The flowchart lists the order of activities. The circle symbol indicates the beginning or end of the process. The box indicates action items and the diamond indicates decision points. A beneficial technique is to map the ideal process and the actual process and identify the differences as targets for improvements.

A flow chart is a pictorial representation showing all of the steps of a process.

A Flowchart is used for:

1. Defining and analyzing processes (example: What is the registration process for entering students?)
2. Building a step-by-step picture of the process for analysis, discussion, or communication purposes (example: Is it possible to shorten the length of time it takes for a student to complete the program?) Defining, standardizing, or finding areas for improvement in a process

STEPS FOR CREATING A FLOWCHART ARE:

1. Familiarize the participants with the flowchart symbols
2. Brainstorm major process tasks. Ask questions such as "What really happens next in the process?", "Does a decision need to be made before the next step?", or What approvals are required before moving on to the next task?"
3. Draw the process flowchart using the symbols on a flip chart or overhead transparency. Every process will have a start and an end (shown by elongated circles). All processes will have tasks and most will have decision points (shown by a diamond).
4. Analyze the flowchart for such items as:

- Time-per-event (reducing cycle time)
- Process repeats (preventing rework)
- Duplication of effort (identifying and eliminating duplicated tasks)
- Unnecessary tasks (eliminating tasks that are in the process for no apparent reason)
- Value-added versus non-value-added tasks

5. Pareto Chart

The Pareto shows the distribution of items and arranges them from the most frequent to the least frequent with the final bar being misc. The tool is named after Wilfredo Pareto, the Italian economist who determined that wealth is not evenly distributed. Some of the people have most of the money. This tool is a graphical picture of the most frequent causes of a particular problem. It shows where to put your initial effort to get the most gain.

A PARETO CHART IS USED FOR:

1. Focusing on critical issues by ranking them in terms of importance and frequency (example: Which course causes the most difficulty for students?; which problem with Product X is most significant to our customers?)
2. Prioritizing problems or causes to efficiently initiate problem solving (example: Which discipline problems should be tackled first? or, What is the most frequent complaint by parents regarding the school?; solution of what production problem will improve quality most?)
3. Analyzing problems or causes by different groupings of data (e.g., by program, by teacher, by school building; by machine, by team)
4. Analyzing the before and after impact of changes made in a process (example: What is the most common complaint of parents before and after the new principal was hired?; has the initiation of a quality improvement program reduced the number of defectives?)

STEPS IN CONSTRUCTING A PARETO CHART WITH STEP-BY-STEP EXAMPLE:

1. Determine the categories of problems or causes to be compared. Begin by organizing the problems or causes into a narrowed down list of categories (usually 8 or less).

2. Select a Standard Unit of Measurement and the Time Period to be studied. It could be a measure of how often something occurs (defects, errors, tardies, cost overruns, etc.); frequencies of reasons cited in surveys as the cause of a certain problem; or a specific measurement of volume or size. The time period to be studied should be a reasonable length of time to collect the data.

3. Collect and Summarize the Data. Create a three-column table with the headings of "error or problem category", "frequency", and "percent of total". In the "error or problem category" column list the categories of problems or causes previously identified. In the "frequency" column write in the totals for each of the categories over the designated period of time. In the "percent of total" column, divide each number in the "frequency" column by the total number of measurements. This will provide the percentage of the total.

Error Category	Frequency	Percent of Total
Punctuation	22	44 %
Grammar	15	30 %
Spelling	10	20 %
Typing	3	6 %
TOTAL	50	100 %

4. Create the framework for the horizontal and vertical axes of the Pareto Chart. The horizontal axis will be the categories of problems or causes in descending order with the most frequently occurring category on the far left (or at the beginning of the horizontal line). There will be two vertical axes-one on the far left and one on the far right. The vertical axis on the far left point will indicate the frequency for each of the categories. Scale it so the value at the top of the axis is slightly higher than the highest frequency number. The vertical axis on the far right will represent the percentage scale and should be scaled so that the point for the number of occurrences on the left matches with the corresponding percentage on the right.

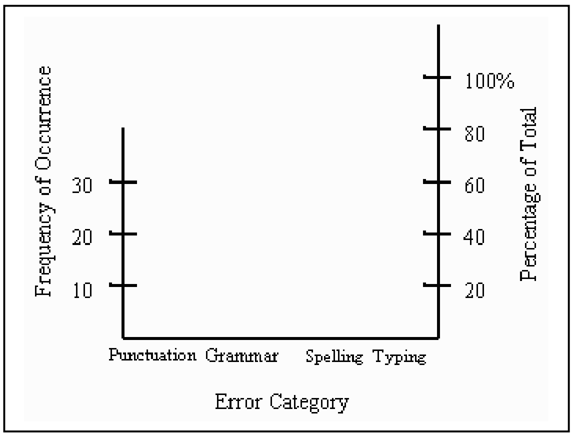

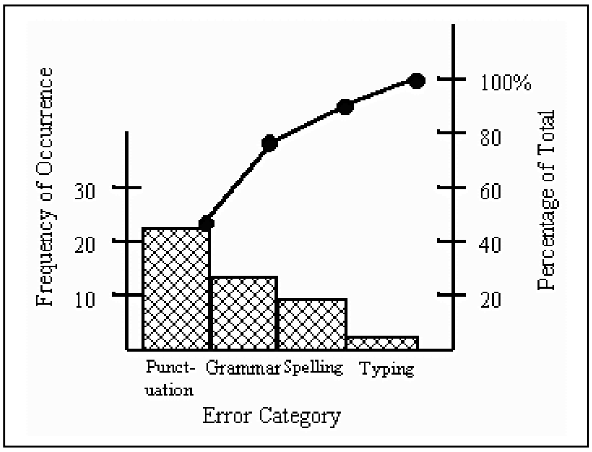

5. Plot the bars on the Pareto Chart. Using a bar graph format, draw the corresponding bars in decreasing height from left to right using the frequency scale on the left vertical axis. To plot the cumulative percentage line, place a dot above each bar at a height corresponding to the scale on the right vertical axis. Then connect these dots from left to right, ending with the 100% point at the top of the right vertical axis.

6. Interpret the Pareto Chart. Use common sense-just because a certain problem occurs most often doesn't necessarily mean it demands your greatest attention. Investigate all angles to help solve the problems-What makes the biggest difference? What will it cost to correct the problems? What will it cost if we don't correct this problem?

6. Histogram

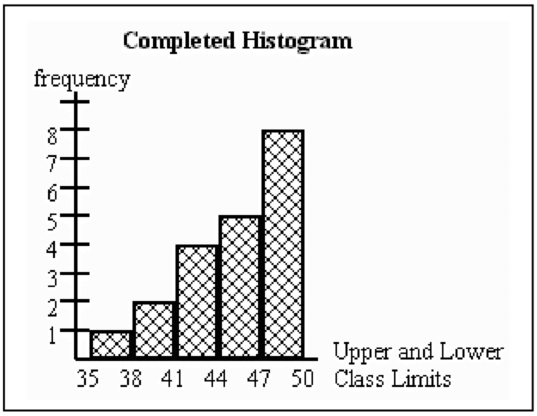

The histogram is a bar chart showing a distribution of variables. An example would be to line up by height a group of people in a course. Normally one would be the tallest and one would be the shortest and there would be a cluster of people around an average height. Hence the phrase "normal distribution". This tool helps identify the cause of problems in a process by the shape of the distribution as well as the width of the distribution.

7. Control Chart

The control chart is a line chart with control limits. It is based on the work of Shewhart and Deming. By mathematically constructing control limits at 3 standard deviations above and below the average, one can determine what variation is due to normal ongoing causes (common causes) and what variation is produced by unique events (special causes). By eliminating the special causes first and then reducing common causes, quality can be improved.

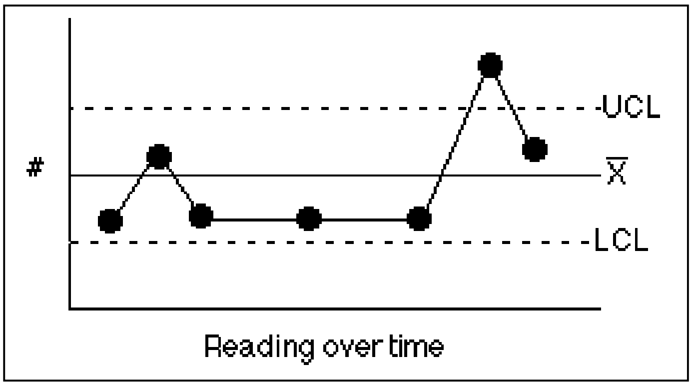

TOTAL QUALITY CONTROL

CASE STUDY:SHORTENING CUSTOMERS' TELEPHONE WAITING TIME

This is the story of a QC program that was implemented in the main office of a large bank. An average of 500 customers call this office every day. Surveys indicated that the callers tended to become irritated if the phone rang more than five times before it was answered, and often would not call the company again. In contrast, a prompt answer after just two rings reassured the customers and made them feel more comfortable doing business by phone.

1. Selection of a Theme.

Telephone reception was chosen as a QC theme for the following reasons: (1) Telephone reception is the first impression a customer receives from the company, (2) this theme coincided with the company's telephone reception slogan, "Don't make customers wait, and avoid needless switching from extension to extension", and (3) it also coincided with a company-wide campaign being promoted at that time which advocated being friendly to everyone one met.

First, the staff discussed why the present method of answering calls made callers wait. Figure 3.1 illustrates a frequent situation, where a call from customer B comes in while the operator is talking with customer A. Let's see why the customer has to wait.

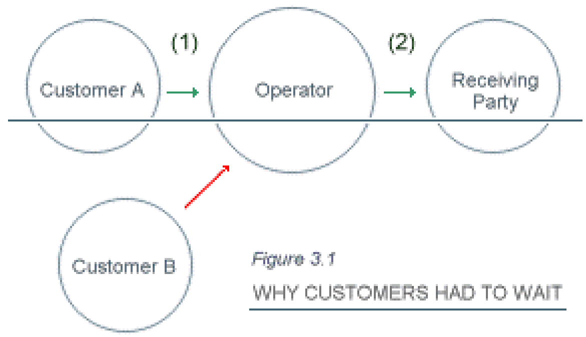

Figure 3.1

WHY CUSTOMERS HAD TO WAIT

At (1), the operator receives a call from the customer but, due to lack of experience, does not know where to connect the call. At (2), the receiving party cannot answer the phone quickly, perhaps because he is unavailable, and nobody can take the call for him. The result is that the operator must transfer the call to another extension while apologizing for the delay.

2. Cause and Effect Diagram and Situation Analysis

In order to fully understand the situation, the circle members decided to conduct a survey regarding the callers who waited for more than five rings. Circle members itemised factors at a brainstorming discussion and arranged them in a cause-and-effect diagram (Figure 3.2). Operators then kept check sheets on several points to tally the results spanning 12 days from June 4 to 16. (See Figure 3.3.)

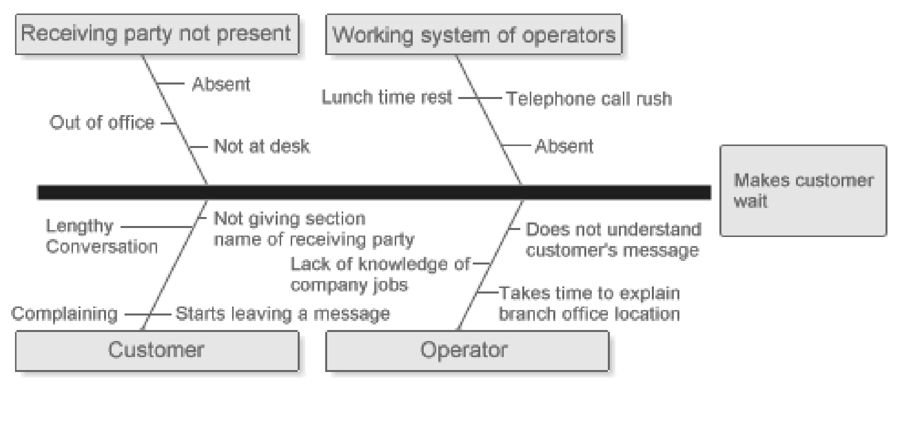

Fig. 3.2 Cause and Effect Diagram

***FIGURE 3.3** Checksheet - Designed to Identify the Problems*

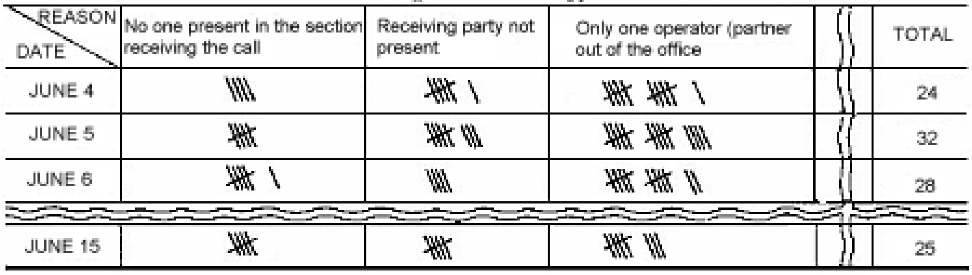

3. Results of the Checksheet Situation Analysis

The data recorded on the checksheets unexpectedly revealed that ‘one operator (partner out of the office)’ topped the list by a big margin, occurring a total of 172 times. In this case, the operator on duty had to deal with large numbers of calls when the phones were busy. Customers who had to wait a long time averaged 29.2 daily, which accounted for 6% of the calls received every day. (see figures 3.4 and 3.5)

***FIGURE 3.4** Reasons Why Callers Had to Wait*

		Daily average	Total Number
A	One operator (partner out of the office)	14.3	172
B	Receiving party not present	6.1	73
C	No one present in the section receiving the call	5.1	61
D	Section and name of receiving party not given	1.6	19
E	Inquiry about branch office locations	1.3	16
F	Other reasons	0.8	10
	Total	29.2	351

Figure 3.5

Reasons why callers had to wait. (Pareto Diagram)

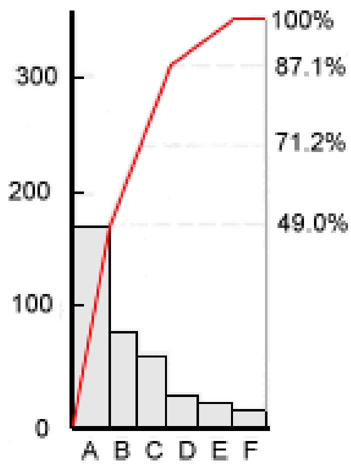

4. Setting the Target

After an intense but productive discussion, the staff decided to set a QC program goal of reducing these waiting callers to zero. That is to say that all incoming calls would be handled promptly, without inconveniencing the customer.

5. Measures and Execution.

(1) Taking lunches on three different shifts leaving at least two operators on the job at all times. Up until this resolution was made a two-shift lunch system had been employed, leaving only one operator on the job while the other was taking a lunch break. However since the survey revealed that this was a major cause of customers waiting on the line, the company bought in a helper operator from the clerical section.

(2) Asking all employees to leave messages when leaving their desks. The objective of this rule was to simplify the operator’s chores when the receiving party was not at his desk. The new program was explained at the employees’ regular morning meetings, and company-wide support was requested. To help implement this practice, posters were placed around the office to publicize the new measures.

(3) Compiling a directory listing of the personnel and their respective jobs. The notebook was specially designed to aid the operators, who could not be expected to know the details of every employee’s job or where to connect his incoming calls.

6. Confirming the Results.

Although the waiting calls could not be reduced to zero, all items presented showed a marked improvement as shown below. The major cause of delays, ‘one operator (partner out of the office)," plummeted from 172 incidents during the control period to 15 in the follow-up survey.

FIGURE 3.6 Effects of QC (Comparison of Before and After QC)

	Reasons why callers had to wait	TOTAL NUMBER BEFORE	TOTAL NUMBER AFTER	DAILY AV. BEFORE	DAILY AV. AFTER
A	One operator (partner out of the office)	172	15	14.5	1.2
B	Receiving party not present	73	17	6.1	1.4
C	No one present in the section receiving the call	61	20	5.1	1.7
D	Section and name of receiving party not given	19	4	1.6	0.3
E	Inquiry about branch office locations	16	3	1.3	0.2
F	Other reasons	10	0	0.8	0
	Total	351	59	29.2	4.8

Period: 12 days from Aug. 17 to 30.

FIGURE 3.7

Effects of QC (Pareto Diagram)

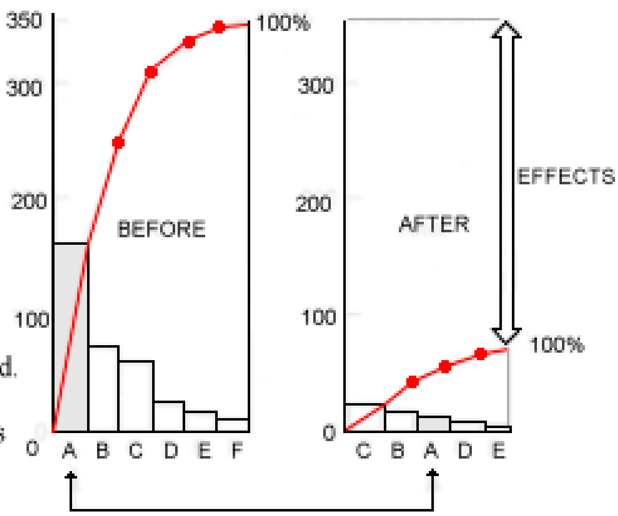

Problems are classified according to cause and presented in order of the amounts of time consumed. They are illustrated in a bar graph. 100% indicates the total number of time consuming calls.

from 'The Quest for Higher Quality - the Deming Prize and Quality control," Ricoh Company Ltd.

4. Find a solution for the problem

5. Implement and evaluate

   When the cause of a problem has been identified, and a "cure" found, it must be implemented and evaluated once again, to confirm that the solution is working. If not, the analysis starts once again. See also the case study "Shortening customers' telephone waiting time". This cycle needs to be applied to every process in every operation, and it should never stop.

   You might ask, if a problem has been fixed, why can't it be checked off the list of things to correct, and fogotten about?

   Because nothing is static: suppliers may change some aspect of their materials; equipment may develop problems that, however slight, affect output; technology may be upgraded, requiring new and different training, and so on.

   Total quality control should allow for this ongoing cycle of continuous quality improvement, a concept that Japan has been using for a long time but which is still quite a revolutionary idea to most western organisations.

The principle behind the continuous improvement is Kaizen, a Japanes term which can be translated:

Kai = change Zen = good

Kaizen means improvement. Moreover it means continuing improvement in personal life, home life, social life, and working life. When applied to the workplace Kaizen means continuing improvement involving everyone - managers and workers alike. Kaizen can be stated the following:

- "In its broadest sense, quality is anything that can be improved."
- "There is <u>always</u> a better way."
- "There is <u>no</u> acceptable best way."

It is through Kaizen that the processes which bring forth or sustain the product are made more competitive. If customer satisfaction (the larger the better) and cost (the smaller the better) are chosen as the primary quality characteristics, then the focus of workplace Kaizen is to improve value, and hence competitive advantage. Total Quality Control is the system to implement Kaizen.

Tools for continuous improvement

1. The Deming Wheel

The process of continuous improvement, called PDSA or, alternatively, PDCA (Plan/Do/Study or Check/Act), is often referred to as the *Deming Wheel*, although Deming called it the *Shewhart Cycle* (after its inventor, Dr. Walter Shewhart, a statistician and author of Statistical Methods from the Viewpoint of Quality Control), illustrated below:

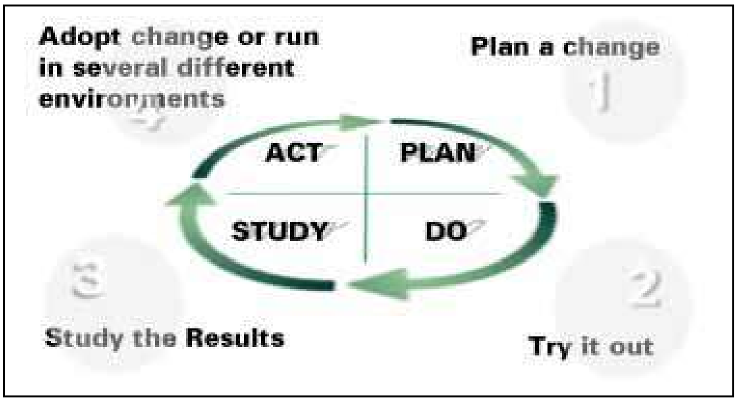

Step 1: Identify a problem area or the opportunity for improvement, the reason for working on it, and an indicator- with an emphasis on the customer-for measuring improvement.

Step 2: Break down the problem area to determine its subparts, identify the components with the most impact on the customer, clarify the problem statement, and set a target for improvement.

Step 3: Evaluate the information gathered, and identify and verify the root causes of the problem. Utilize cause and effect analysis and the questions, "What causes this?" and "Why does this condition exist?" to eliminate the problem's symptoms and identify the underlying or root cause.

Step 4: Identify and select the proposed solutions or countermeasures to correct the root cause of the problem identified and verified in step 3. Evaluate potential countermeasures for effectiveness and feasibility, and support the one chosen for implementation with appropriate data such as cost-benefit analysis, barrier/aid identification, and an action plan to assure any barriers are overcome.

Step 5: Confirm that the problem and its root causes have been identified, countermeasures implemented, and the problem decreased and the target for improvement met.

Step 6: Assure that once a problem and its root causes have been identified and countermeasures implemented, the problem doesn't recur. Once the data obtained in step 5 confirm that the countermeasures have been successful, the improvement can be standardized, using control charts and/or standards or procedures. Replication should be utilized where the results are successful and can be shared with other areas doing similar work.

Step 7: Decide what will be done with any future problems, evaluate the team's effectiveness and lessons learned, and develop an action plan for remaining problems. This step identifies the Deming Wheel as a tool, which should continue to be used to evaluate the problem and any changes in circumstances. By continually turning the wheel, adjustments can be made as circumstances change.

2. Benchmarking

Another method employed in continuous quality improvement is known as benchmarking. Benchmarking involves the comparison and measurement of similar processes, and might take place on any of three levels:

- Within a company (e.g., between departments)
- Between a company and its competitor(s) or
- Against other industries.

It may not be known beforehand whether the process selected for comparison is better, equivalent or worse than the one being measured, but often those doing the benchmarking will look for the "best in class" -- a top-notch yardstick against which to measure and which, it is hoped, will aid in their own process improvement.

Benchmarking is not new. We all perform it to some extent every day, and never give it a second thought. For example, we may realize that our colleague has found a quicker route to work. The majority of us will be keen to learn how this improvement has been achieved, so we ask. We get the maps out and clarify exactly the route taken, and implement the action to achieve the improvement...until an even better route is identified. Improvement is a never ending journey.

What can be so difficult about examining how other organizations have achieved improved performance?
The answer is nothing, but "examining others" is a world away from really learning "how" they achieved the improvement.

1. How do you identify a suitable activity to benchmark?

As with all improvement activities, it is better to start with a known problem area that is able to be defined, or an activity where improvement will provide maximum benefit.
Once the subject activity is identified, spend as much time as possible defining it. The more clearly you know your problem, the easier it will be to identify differences that will lead to major improvement.

2. How do we gather the information?

- Develop a questionnaire with all the information you want to obtain. Remember to phrase questions to gain maximum comparative information. Ask open-ended questions-How? Where? When? Who? What?-and allow for scaled answers (very important, important, not important). Review the questionnaire with a team of others to identify ways to improve it.
- Complete the questionnaire for your own organization. This is a good test of the questions and also ensures that you can respond to similar requests for information from your benchmarking partners.
- Write down your reasons for asking each question. Again, this will test if all the questions are really necessary, and will provide you with a ready-made answer when the partner asks, "Why do you want to know that?"
- Talk to the benchmarking partner. Describe and clarify your areas of interest, objectives and primary questions. Ask if these areas have been covered before (the information you seek might already be available).
- Arrange a visit (eyes are as useful as ears-and they double your chances of learning).

3. How should a visit be performed?

- Prepare thoroughly. Find out as much as possible about the benchmarking partner from other sources (publications, consultants, trade associations, etc.) so that you can maximize knowledge gained from direct contact with the partner.
- Use a small team (two people is ideal) and nominate one as the leader. Thank the partner (again and again). Debrief as soon as possible after the visit.

4. What to do with the information gained?

- Use it to compare the similarities and differences in your two organizations and activities, in order to clearly identify improvement opportunities. Share the knowledge with all interested parties in your own organization, and then take the improvement action!

But several of the quality "gurus" warn of the limitations in benchmarking, some of which include copying a more successful competitor's performance without understanding the underlying reasons for the performance, and seeing it as an end in itself. Even if your company found it was the "best in class", that doesn't mean it's time to stop looking for ways to improve quality. The search for total quality control should be never- ending.

QUALITY ASSURANCE

Quality assurance is the method by which organisations try to ensure that their product conforms to specifications and meets customer expectations. "Assurance" consists of a system of rules or procedures setting standards for activities in an organisation. It is possible to develop this for one company, but having one which several conform to has its benefits. For example, the need for Quality System Standards was recognised in the 1960's by UK armed forces, which had suffered from high levels of equipment failure. Successful implementation there led to similar standards being applied to other high-risk industries (e.g., nuclear plants).

Once the benefits of applying such standards had become apparent, the concept spread to industries in general, leading to the development by the British Standards Institute in 1979 of a standardised, formal quality assurance system known as BS5750. Although companies could follow their own, internally developed quality standards, it also become apparent that implementing a formal, nationally approved system could give a distinct edge in an increasingly competitive marketplace, and more and more companies chose to go with BS5750. This, in turn, led to the development of an internationally recognised Quality System Standard known as ISO9000. Instituted by the Geneva-based International Organisation for Standardisation, and directly based on BS5750, ISO9000 (and no, it is not an incorrect acronym, but simply usage of the prefix "iso", meaning "equal") was formally adopted by a number of countries in 1987.

Like BS5750, ISO9000 has three levels, the first, ISO9001, is the most demanding. The second level concerns only production and installation, while level 3 is limited to final inspection and tests. ISO9001 covers the following areas:

Although the standards were originally developed for use in manufacturing, they have been expanded to apply to service industries as well. Sometimes ISO9000-type procedures are in place even if the system has not been formally adopted.

ISO9000 has a lot to recommend it: it's well laid out and easy to follow, provides opportunities to discover and implement quality improvements in operational processes, and reassures customers that a company is both in compliance with industry - wide system specifications and has a commitment to providing the best possible product. It would seem that ISO9000 is the perfect way to ensure quality. But is it? Rules are not always what they seem or appropriate:

Businesses often think that, once they "have ISO9000", they automatically have a quality product, but that may not be the case. Take another look at the list of areas above for ISO9001: each process is being monitored, but there's no guarantee that the process itself -- no matter how long or recently it's been in place -- is any good. It's been pointed out that, under ISO9000 rules, you could produce a lifejacket made out of concrete.

ISO9000 is a good starting point, and should be customised for individual organisations. But in its current form, it doesn't cover enough ground; opportunities for quality improvements to a process are not necessarily spotted or acted upon; it doesn't allow for customer feedback, and it can be too inflexible.

CASE STUDY - FOUNTAIN BREWERY - FORKLIFTS

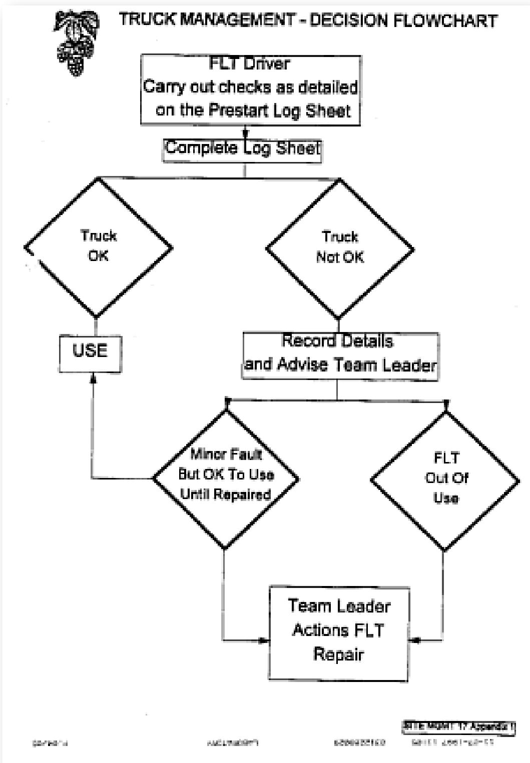

Forklifts are important pieces of equipment at the Brewery, as they are used to transport the completed packages of beer from their pallets to loading areas and then onto delivery trucks.

Scottish Courage follows ISO9002 procedures, adapted for the company's use, for the management and maintenance of their forklifts. A Truck Management Decision Flowchart is appended to this basic outline of procedures, which, when used in conjunction with the "FLT Prestart Log Sheet", helps the employees decide whether a forklift is operational, faulty but operational, or not fit for use. Scottish Courage implemented BS5750 in 1991 solely for its Small Packaging area. Quality System Manager *Terry McLaughlin* says there were two reasons for the implementation: it was seen as a good commercial advantage, and they were under external pressure from customers. "When Scottish Courage and Scottish & Newcastle merged in 1995," he recalls, "management looked at its business strategy and decided to make Quality System the foundation of operations. ISO then became the objective for everybody." Systems were phased in over several years, and the entire site received full ISO registration in July 1996.

"We've decided as a company that we want to base management on ISO and Total Quality; it enhances our business opportunities", says Terry. ISO procedures add consistency to the Brewery's operations, but "it's not seen as set in stone. It's an organic system, is being developed and will continue to be developed. Procedures are subject to regular change if we feel things are not as good as they could be."

TOTAL QUALITY MANAGEMENT

Total quality management is a holistic, dynamic approach to management. It involves all of the preceding aspects of quality, but takes them further and integrates them completely into an organisation. TQM focuses on:

- Customer satisfaction.
- Involvement
- Continuous improvement.

Customer satisfaction.

Whether the customer is external or internal to the company, this is what keeps a company in business. Marketing departments often take on the task of determining what the customer wants, via methods such as customer surveys. But surveys may have design pitfalls: if you don't ask the right questions, you won't get the right answers. For example, it's an asset if your salespeople are perceived by all concerned as polite and cheerful, but that won't improve your sales figures if they can't supply your customers with necessary product on a timely basis. TQM must consider both current and future customer needs, while keeping in mind such possibilities as the development of new products that customers might not think of on their own but which they would respond positively to.

Involvement.

To achieve TQ, everyone in an organisation must be committed. Achieving this commitment is not easy and takes a long time (for example, Juran would say five years). This is why most authors suggest that organisations need strong leadership and commitment from the top. Companies use mechanisms such as Quality Circles (which nowadays are cross-functional teams that meet regularly) and suggestion schemes to include people in the TQ objective. However, if these are not complete with training and information sharing, they won’t work. The best results come when people work on issues which are relevant to them, using techniques they are familiar with, and they have the responsibility and often the resources to effect changes. Prior to practical and effective implementation of the TQ the following breakthrough concepts are necessary:

- Change the way of thinking of the individual
- Change the way of doing things in the company

Continuous improvement

In the ideal TQM environment, all processes are constantly under examination, and everyone in the company is committed to the concept of continuous improvement. If an organisation recognises that analysis and improvement of processes must be never-ending in order to achieve and retain customer satisfaction, provides avenues for both customer and employee feedback, and uses all the quality tools available, Total Quality Management can be realised.

Maintenance & Repair
Module 2

(32 hours Course)

With technical assistance from:

GERMAN DEVELOPMENT SERVICE

General Survey –"Maintenance & Repair"- Module 2 Course

TARGET PARTICIPANTS
min 18 years old, at least High School graduates, experienced workers, supervisors or leadsman

LENGTH OF COURSE
32 hours / 4 days

OBJECTIVES

At the end of the course, the participants should be able to:

- know the importance of maintenance for an industrial plant in general.
- know the common types of bolts, nuts, stud bolts, parallel- and taper pins, keys, snap ring and make use of them.
- know different types of bearings, the tolerances for shaft and housing, the arrangement of bearings, different methods on how to locate them, different mounting and dismounting methods and the tools needed during these operations.
- know the most important types of seals, e.g. face seal, O-ring, Radial shaft ring, V-ring, Labyrinth ring, Packings …….
- know typical operation materials e.g. lubrications, gaskets, sealing materials, cleaner, cleaning cloth and how to use them efficiently.
- know the importance of safety check and environment conscious before starting a repair job. Use the proper safety procedures and the safety equipment
- Study a typical method on how to repair a machine: Verify, dismount, clean, repair and mount one type of enclosed gear drive. Lubricate the unit and make a test run.

COURSE OUTLINE

THEORY (50 %)	HANDS-ON TRAINING (50 %)	METHOD
• Joint Connections • Rolling Bearings • Seals • Repair job procedure • Safety during repair activities	• Dismount a speed reducing gear completely, incl. ball bearings and gaskets • Mount the gear and choose the right lubrications • Assemble the gear together with an electric motor on a mounting plate and align their coupling and make a test run	• Lectures / Discussions • Worksheets • Practical Sessions • Case studies/Group discussions • Videos

Table of Contents

August 2000

Dear Reader,

I would like to comment this handout, because otherwise you might get a little confused while studying it.
The most important thing to know is, that this handout is developed for a **non-formal** Training Center. The participating government officials and the involved companies were not interested in long-term courses. So, I had to respect the wish of my project partners for a course with this length and was limited on the most important subjects.

One or two of the modules are still under construction. Sorry for this.

DED – Development Worker

1. INTRODUCTION IN MAINTENANCE & REPAIR MODULE II

1.1 Importance of Maintenance in General

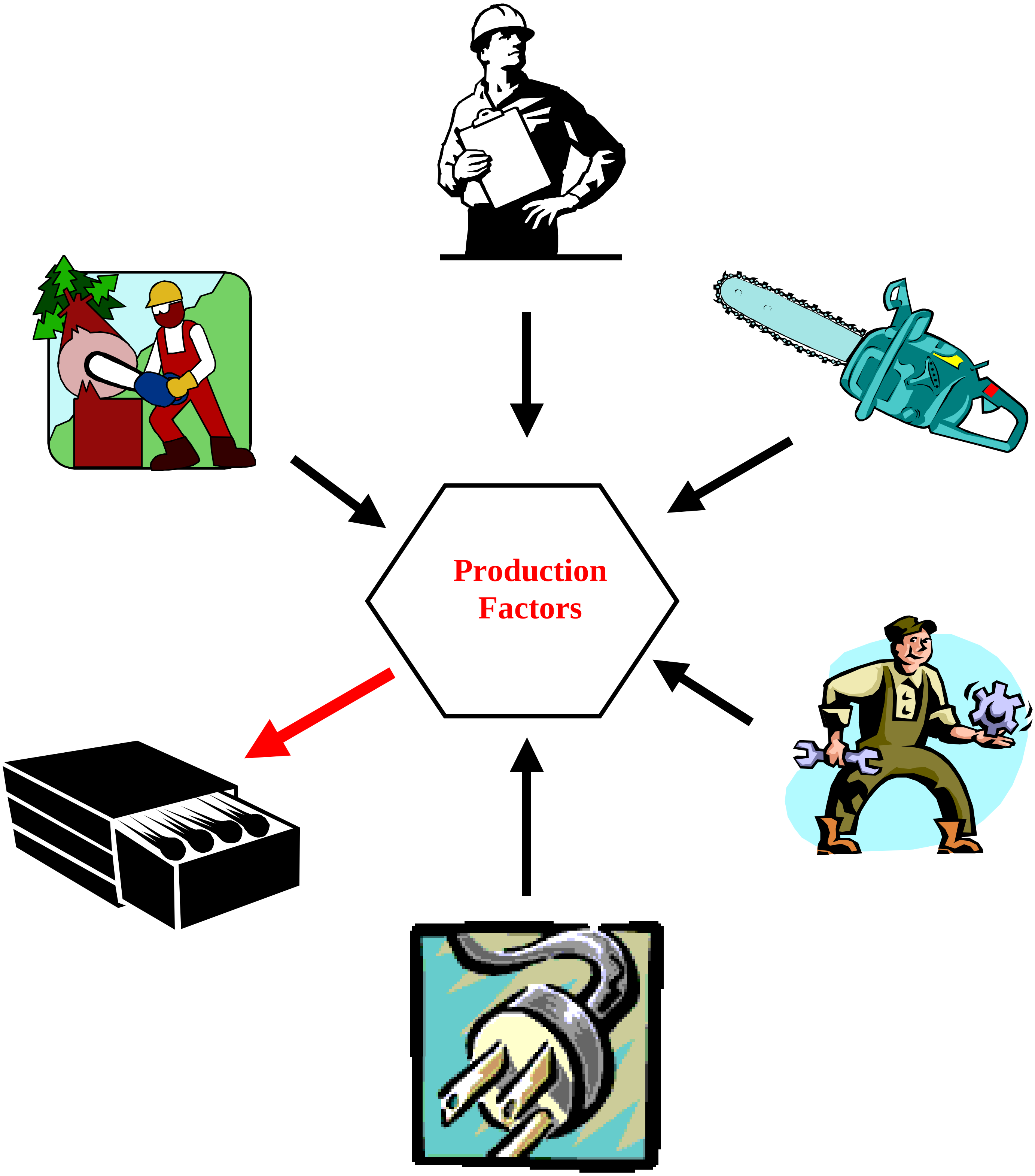

1.2 Examples of typicall Machinery and the common Repair Tasks

Machine	A	B	F	S	M	L	EM	DB	H	P	RW
Elelectric Motor	X	X	X	X	X	X	X	X			
Gear Drive	X	X	X	X	X	X	X				
Pump	X	X	X	X	X	X	X	X			X
Exhaust Fan	X	X	X	X	X	X	X	X			X
Drier	X	X	X	X	X	X	X		X		X
Disintegrator		X	X	X	X	X	X				X
Centrifuge	X	X	X	X	X	X	X	X	X	X	X
Compressor	X	X	X	X	X	X	X			X	
Injection Moulding	X	X	X	X	X	X			X	X	X
Rollers	X	X	X	X	X	X	X				
Conveyor Belt System	X	X	X	X	X	X					
Stirring Aparatus	X	X	X	X	X	X	X				X

Legend:

A = Alignment
B = Ball Bearing
DB = Dynamic Balancing
EM = Exact Measuremment
H = Hydraulic
M = Machine Shop

S = Sealing
L = Lubrication
F = Fastening
P = Pneumatic
RW = Repair Welding

2. JOINING

The joints we will explain in this chapter can be applied universally as ready-to-mount machine elements. This is especially due to the fact that the dimensions of the popular joints are standardized according ISO (International Standardization Organization).

2.1 Screw Joints

2.1.2 Types of Screws and Bolts

Practically we distinguish screws through the form and size of head, through dimensioning of shaft and thread and through the material from which they are produced.

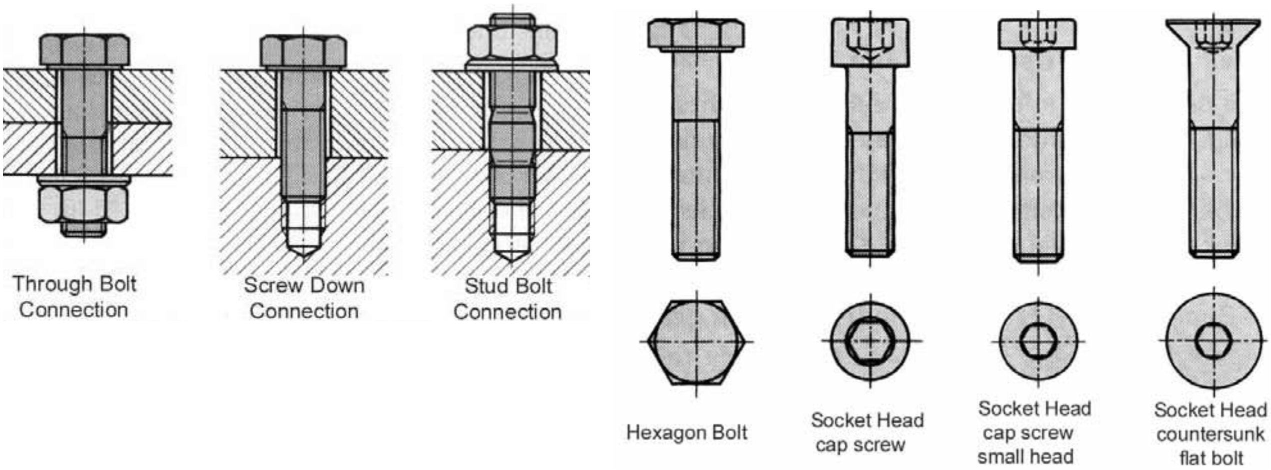

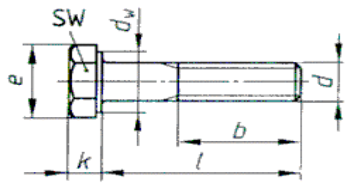

Hexagon Bolt

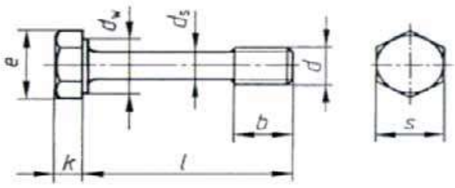

Anti-Fatique Bolt

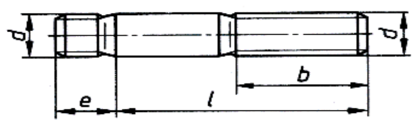

Stud Bolt

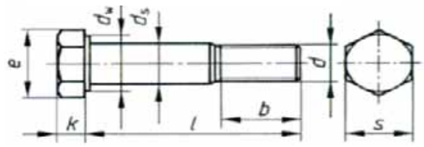

Body Fit or Dowel Bolt

Hexagonal Head Screws and bolts are used with nuts in through holes and without nuts in threaded holes, in which an internal thread is cut in the actual work piece.
Stud Bolts are used if the joint is to be separated frequently. The shorter threaded end of the stud is screwed into the workpiece.
Hexagon Socket Head Screws save space because of their cylindrical heads, which can also be countersunk.
Body-Fit Bolts are used if movement between the workpieces must be prevented, and shear forces are high. Their shank diameter is slightly higher than the thread diameter.
Anti-Fatigue Bolts are used in screwed joints subject to continous alternating loads. The anti-fatique bolts are tightened with wrench to a specific value specified by the manufacturer. Anti-fatique bolts have a longer life under the condition of alternating loads than normal bolts.

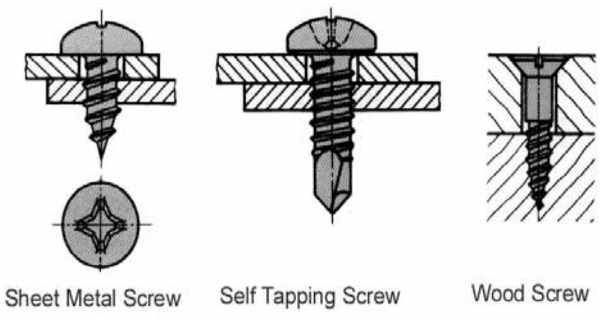

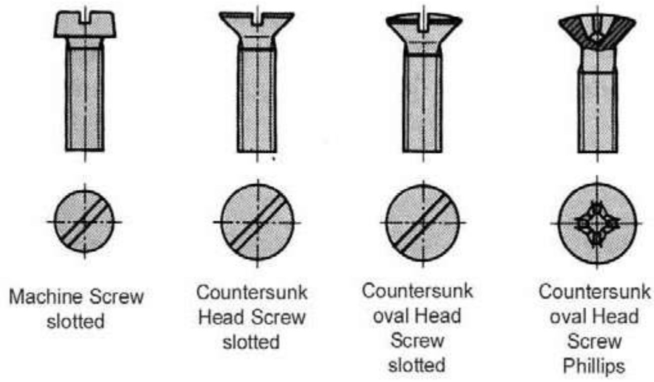

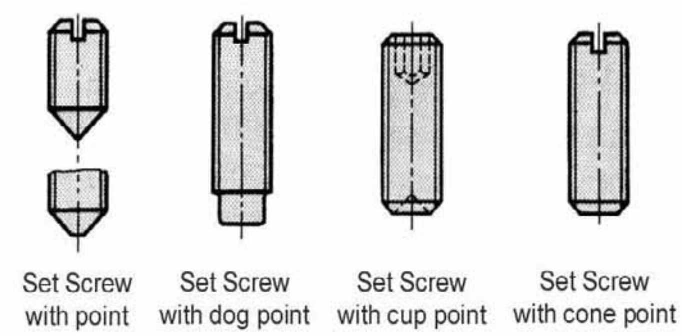

Slotted Head Screws and cross-recessed (Phillips head) screws can have various head patterns: half round (domed head), cheesehead, countersunk, raised cheesehead or raised countersunk

Set Screws are screws without a head, threaded for their entire length. Depending on the application they can have various ends: coned point, full dog point, cupped point. Grub screws (setscrews) are used for the clamping or locking of hubs, bushes or bearings.

Wood Screws are available with slotted, square or hexagonal heads. They are used for joints between wooden parts.

Sheet Metal Screws (self-tapping screws) are used to make joints with sheet metal. Their threads are similar to wood screws. As they are tightened, they cut their own thread in the sheet metal. The hole in the sheet should have the same diameter as the core of the screw. Clamp nuts (sheet-metal nuts) are also frequently used. The joints are vibration-resistant and can be separated any number of times. Sheet metal screws are available with slotted, cross-recessed or hexagonal heads.

Thread Bushes are used if the thread is to be cut in a soft material and/or if the screwed joint has to be detached often.

Thread Inserts (Heli-Coil) are used if the thread already cut in the workpiece has been damaged. Thread inserts consist of a rhomboid-form chrome nickel steel wire formed into a coil to produce an inner and an outer thread. Procedure to repair a damaged thread:

- Drill out the damaged threads using the drill size specified in the manufacturers catalog
- Tap the hole using the special Coil Tap specified in the manufacturers catalog
- Install the replacement Coil. Wind the Coil into the hole. To brake the tang using the recommended special tool.

2.1.2 Designation of Screws, Bolts and Nuts

The designation of all screws, bolts and nuts are world wide standardized in the **ISO Norm:** For further information ask your supervisor or your supplier.

Example for Hexagon Bolt:
Hexagon Bolt ISO 4017 M12 x 80 - 8.8

ISO 4017	=	Specific ISO Norm
M12	=	Metric thread 12 mm outside diameter
80	=	Length of Shaft is 80 mm
8.8	=	Tensile Grade 800 N/mm^2, Offset Yield Stress 640 N/mm^2

Property Classes for Bolts:

Steel screws are marked with the manufacturer's symbol and the strength rating. This consists of two numerals separated by a point, for example 8.8. The first number is one-hundredth of the minimum tensile strength in N/mm^2, in our example the strength of 800 N/mm^2. The second number is ten times the apparent yield point ratio. Just multiply the first number with the second number (8 x 8 = 64) and multiply it by ten (10 x 64 = 640 N/mm^2).

Property Class	3.6	4.6	4.8	5.6	5.8	6.8	8.8	10.9	12.9
Tensile Grade in N/mm^2	300	400	400	500	500	600	800	1000	1200
Offset Yield Stress in N/mm^2	180	240	320	300	400	480	640	900	1080

2.1.3 Materials for Bolts and Nuts

- Black (standard bolt)
- Chrome-plated
- Nickel-plated
- Black finishing (Gunmetal look)
- Zinc coated (galvanized)

2.1.4 Minimum Screw-In length for bolts

To give a bolt connection its full strength, the minimum screw-in length should be at least 1 times the outside diameter of the thread.

Minimum screw-in length = 1 x D of thread

2.1.5 Nuts

Type	Use	Type	Use
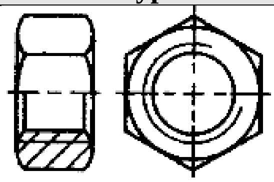	Hexagon Nut For general use in combination with all kind of bolts. Thickness of about 0.8 x d	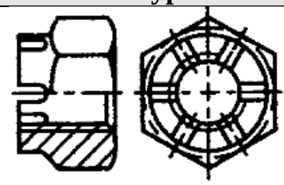	Castle Nut To secure the bolt connection with split-pin
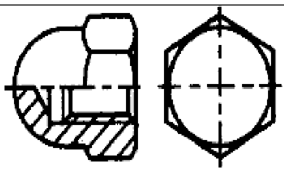	Cap Nut • Protection for the end of the thread • Protection against injury	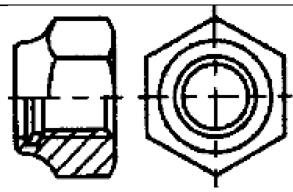	Self-locking Nut with plastic Ring This type will protect the bolt connection against loosening
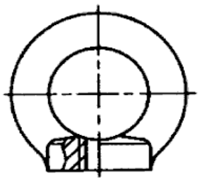	Ring Nut or Lifting Eye Ring for transportation of equipment	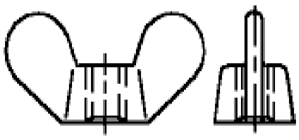	Wing Nut For often to loose/ fasten bolt connections. Can be tightened by hand.
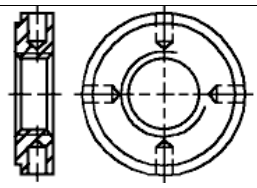	Capstan Nut (Cross Hole Nut) For adjustment of axial play and for fixing bearings on shafts	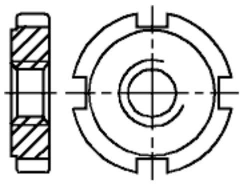	Groove Nut For adjustment of axial play and for fixing bearings on shafts

2.1.6 Bolt Connection Locking

Screw joints are subject to vibration. They can loosen by themselves. Screw lockings are necessary and specified when human lives or expensive/sensitive equipment depend upon stability of such joints, e.g. in motor vehicles, elevators.

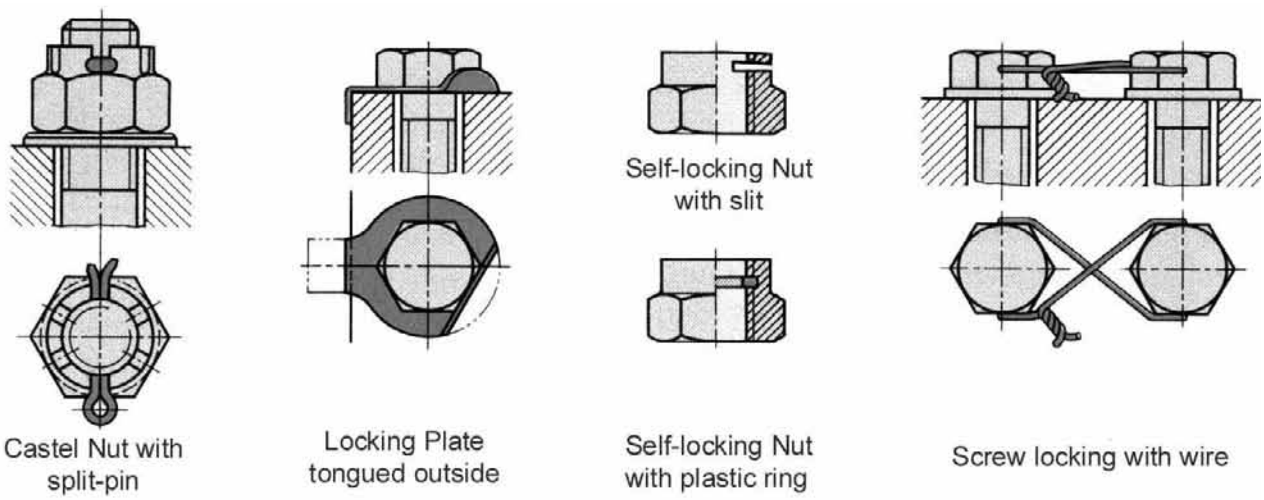

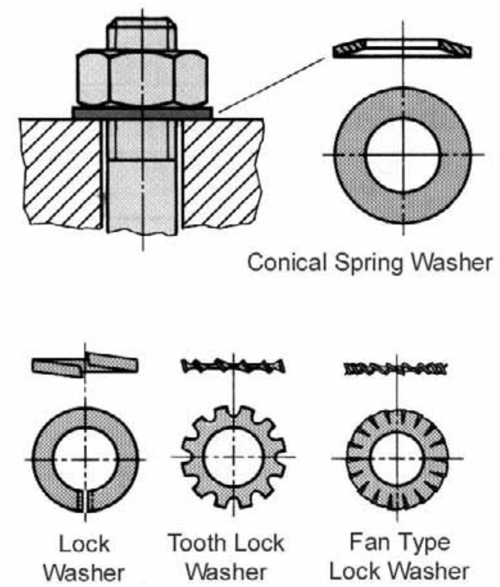

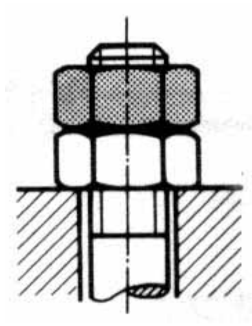

Counter-Nuts

Spring **washers** and toothed or **serrated lock washers** apply a load to the nut and also bite into its surface and that of the workpiece. Convex or corrugated spring washers are also used. In the case of double nuts (locknuts, counter-nuts or check nuts), the top nut elongates the end of the screw or bolt within the elastic range as it is tightened down against the lower nut. This presses the two nuts together and prevents them from coming loose.

Lock **washers** are made from thin steel sheet. If a **wire keeper is** specified, a soft steel wire is inserted through holes in the screw head and twisted to tighten it. The wire must be attached in such a way that it is stressed in tension if a screw tends to work loose.

Castle nuts can be locked very reliably by means of split pins. However, the range of adjustment is limited by the number of slots on the nut.

Elastic stop nuts (self-locking nuts) have a firmly located polyamide ring at the end of the thread, which is pressed into the bolt threads when the nut is screwed on, and prevents the screwed joint from working loose. The friction exerted by the polyamide ring means that greater tightening torque is required. These nuts must be used only once.

One common method of locking bolt connections is the use of glue (**LOCTITE**). The bolt thread and the female part of the thread must be free of oil, grease or any other contamination.

2.1.7 Screw Tightening Tools

Screwdrivers with a plain blade are used for slotted-head screws. To prevent damage to the screw head, the screwdriver blade must be of the correct width and thickness. It must be flat and not ground to a wedge shape**.** For the various types of cross-recesses screws there are special patterns of screwdriver.

The force exerted by a spanner or wrench should be sufficient to obtain an adequately firm screwed joint after tightening, with no risk of overstressing or stripping the thread. This can occur if the spanner is extended by attaching a length of tube to its handle, in which case the thread may well be damaged beyond repair. Spanners should always be an exact fit on the bolt head or nut.

If the spanner is too large, the bolt head or nut will be damaged and will tend to become round, so that even the correct size of spanner no longer fits; furthermore, a slipping spanner could cause an accident.

Torque wrenches indicate the amount of torque being exerted on a suitably calibrated scale. If the values specified by the automobile manufacturer, for instance, are adhered to, all threaded connections on the vehicle will be tightened correctly.

Screws and nuts should not be tightened with too much force or they may be damaged; if they are too loose, on the other hand, they could fail to grip and work loose.

Most torque wrenches can be set to a definite value. If this is exceeded, the wrench slips and therefore cannot overtighten the joint. There are many plug-in heads and inserts for torque wrenches, particularly for tightening various sizes of hex bolts and nuts.

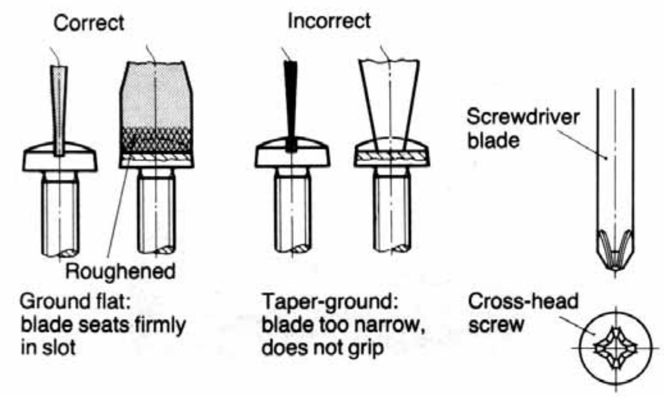

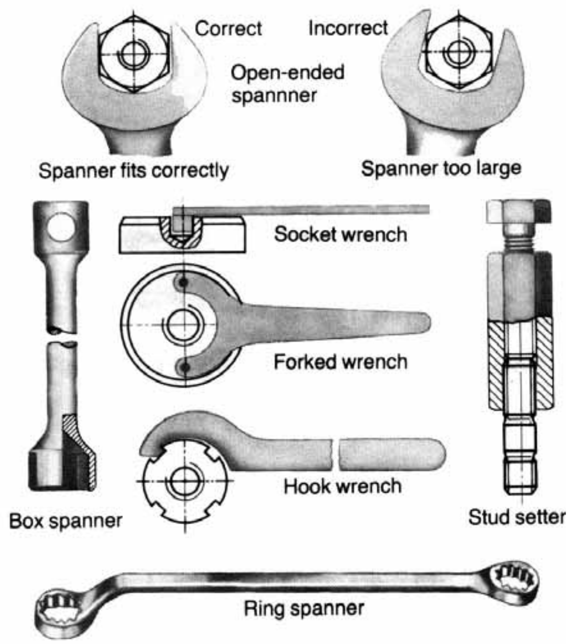

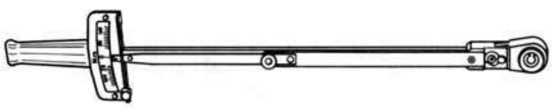

Torque Wrench

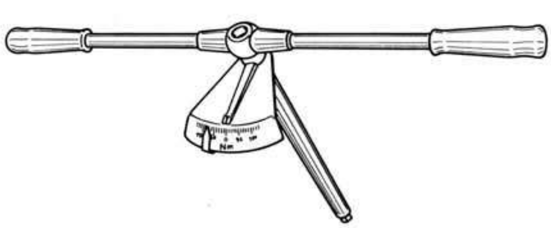

2.2 Pin Connections

Pin connections fulfill two functions:

a) Connection of components such as hand wheels, small gears, cranks, etc., to shafts
b) Fixing components such as housing covers, stops, parts of cutting tools, etc., against shifting and to ensure that they occupy their original position, even after detaching and reassembling. Pins are subject to shearing stress.

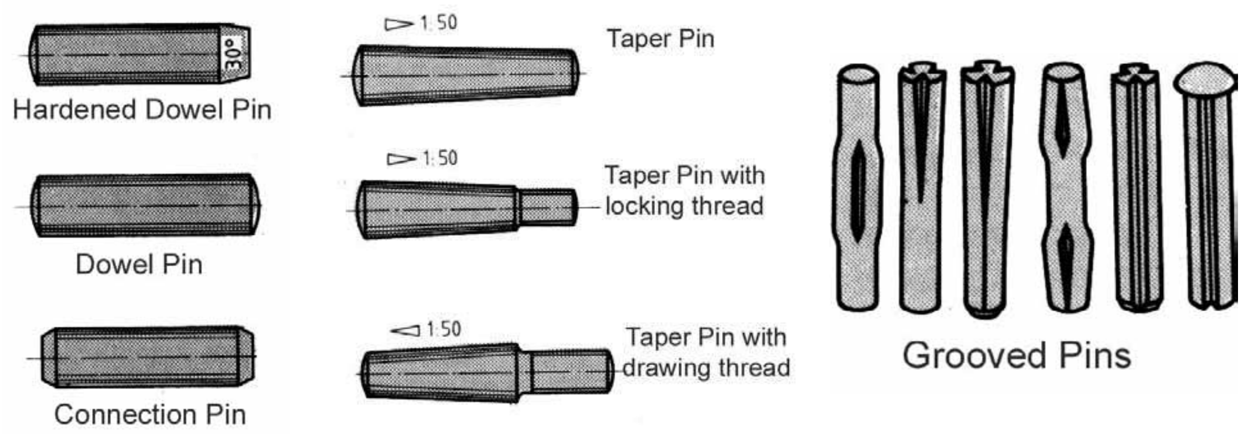

2.3 Snap Rings

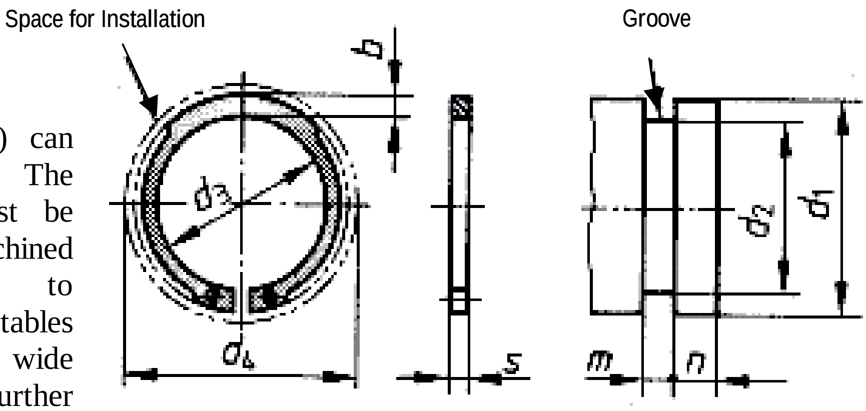

Snap Rings (Seeger Rings) can absorb great axial forces. The grooves for the ring must be sharp-edged and machined precisely according to measurement tables. Those tables are following the world wide accepted ISO standard. For further information ask your supervisor or check with the supplier manual.

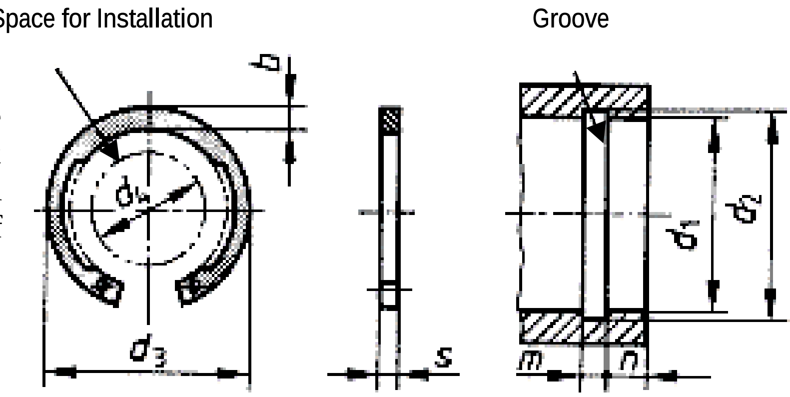

To measure and order a snap ring just measure for shafts, the shaft diameter. For holes, just measure the hole diameter. In addition measure the thickness of the ring.

Example for Shaft:
Shaft 40 x 1.75 is a ring for a 40 mm shaft with a thickness of 1.75 mm.

2.4 Feather Keys

The feather key connection is transmitting torque by positive locking. Depending on the type of connection the fit between the feather key and the keyway needs a different layout.
For example: For sliding gears there should be a loose clearance fit between the hub keyway and the feather key. Between the shaft keyway and the feather key there should be a transition fit.

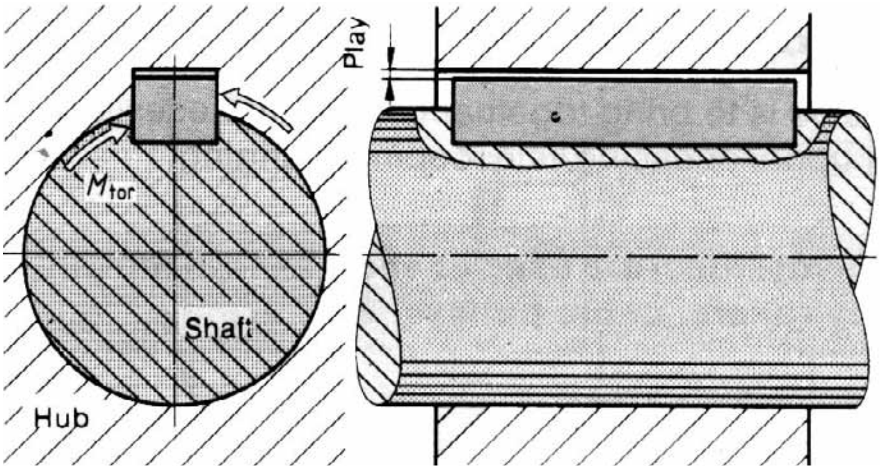

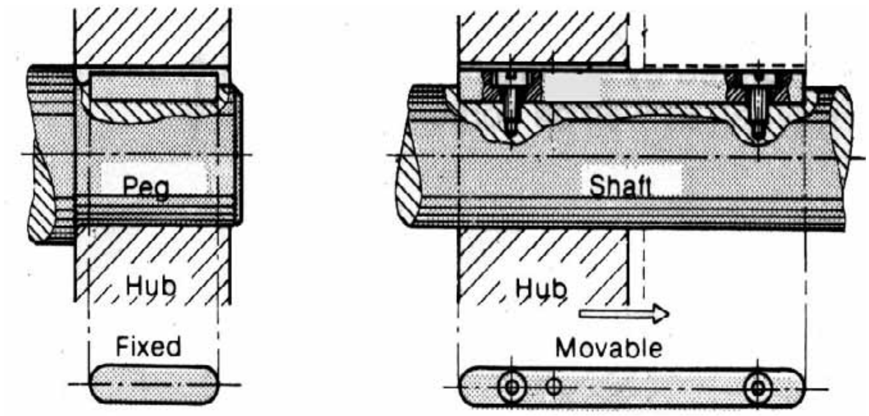

The size of feather key depends on the diameter of the shaft. The table below shows the standardized sizes according ISO.

Diameter	**6 to 8 mm**	**8 to 10 mm**	**10 to 12 mm**	**12 to 17 mm**	**17 to 22 mm**	**22 to 30 mm**	**30 to 38 mm**	**38 to 44 mm**	**44 to 50 mm**
Width	2 mm	3 mm	4 mm	5 mm	6 mm	8 mm	10 mm	12 mm	14 mm
Height	2 mm	3 mm	4 mm	5 mm	6 mm	7 mm	8 mm	8 mm	9 mm

3. ROLLING BEARINGS

Bearings, especially large heavy-duty bearings are a major capital expense for many industries, with each one costing several hundred to thousands of dollars. Even more significant is the replacement cost for such bearings, since lost production and labor cost must be included in total cost involved when a bearing fails. Premature failure can happen through:

- Poor Fitting (fits to tight or to loose, wrong mounting tools) = 16 % of all bearings
- Poor Lubrication = 36 % of all bearings
- Contamination = 14 % of all bearings
- Fatigue (overloaded, or incorrectly serviced) = 34 % of all bearings

3.1 Introduction

All bearings that transfer loads via rolling elements are named rolling bearings. They use balls or other rolling elements, located between bearing rings, to minimize friction. The rolling elements are separated and held in position by "cages".

The fundamental purpose of a bearing is to transmit a load between a stationary part of a machine **(most likely a housing)** and a rotating part of a machine **(most likely a shaft)** with a minimum of resistance.

A rolling bearing has to transmit loads between the inner and outer rings of the bearing via the rolling elements. Depending on the type of rolling element that are used, the rolling bearing are classified into two groups:
- Ball Bearing – Load is carried over a very small surface – **Point Contact**
- Roller Bearing – Load is carried over a bigger surface **– Line Contact**

In general we can say, that ball bearings will generate under the same load more friction than roller bearings.

Bearings are further classified by the specific shape of their rolling elements:
- Ball, Cylindrical, Spherical, or Tapered.

Bearings are also classified by function depending on the direction of the applied load.
- Radial, Thrust or Combined

Rolling Elements

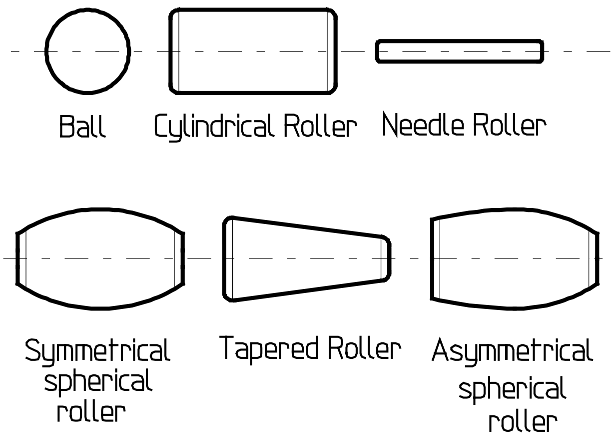

3.2 Components of Bearings

Outer Ring The outer ring is mounted in the housing of the machine and in most cases it does not rotate. The raceway against which the rolling elements run have different forms – sphered, cylindrical, tapered – depending on the type of rolling elements.

Cage The cage separates the rolling elements preventing contact between them during operation, which would cause poor lubrication conditions. With many bearings types the cage holds the bearing together during handling.

Inner Ring The inner ring is mounted on the shaft of the machine and is in most cases the rotating part. The bore can be cylindrical or tapered. The raceways against which the rolling elements run have different forms - sphered, cylindrical, tapered – depending on the type of rolling elements.

Rolling Elements The rolling elements can be balls, cylindrical rollers, spherical rollers, tapered rollers or needle rollers. They rotate against the inner and outer ring raceways and transmit the load acting on the bearing via small surface contacts separated by a thin lubrication film.

Seal Seals are essential for a long and reliable life of the bearing. They protect the bearing from contamination and bearings with integral seals are becoming increasingly popular.

Guide Ring Guide rings are used in spherical roller bearings. The function of the guide rings is to guide the rollers in the bearings so that they rotate parallel to the shaft and to distribute the load evenly. The quality demands for guide rings are extremely high and even the slightest ovality is totally unacceptable.

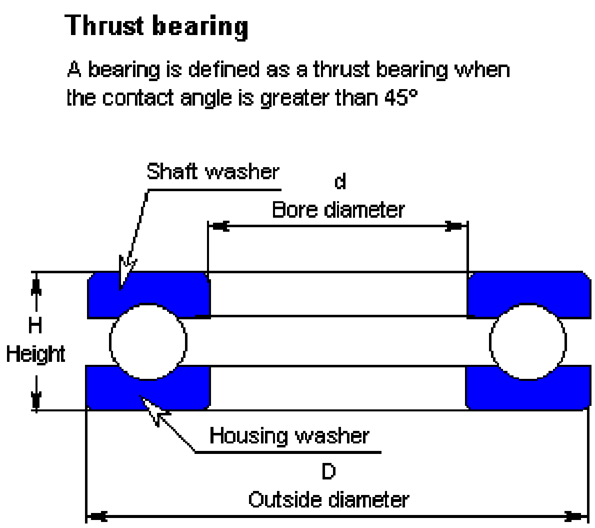

Ball Bearing

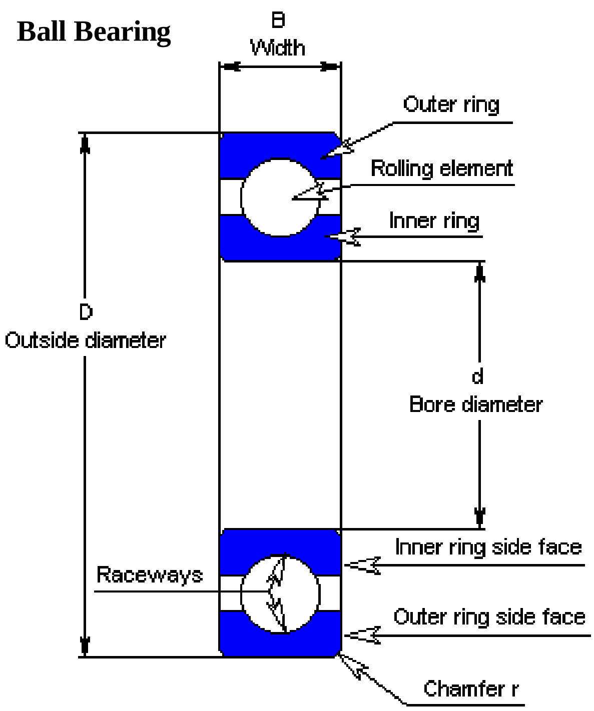

Materials used in bearings production:

- Through hardening steel, very clean for outer and inner ring
- Hardening steel, very clean for rolling elements
- Cages are made out of steel, brass or light alloy and plastic
- Side shields are made out of rubber, metal sheet or polyurethane or synthetic

3.3 Types of Bearing

There are more than 20,000 different bearings available on the market. The weight for example can be only a few grams up to more than 70 tons. Below you can find the most common types:

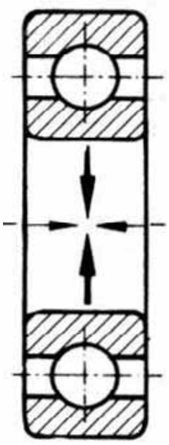

Deep Groove Ball Bearing

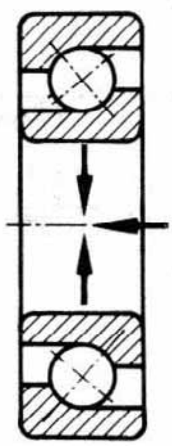

Angular Contact Ball Bearing

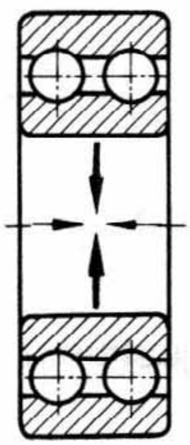

Double Row Deep Groove Ball Bearing

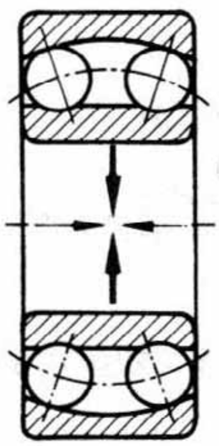

Self-Aligning Ball Bearing

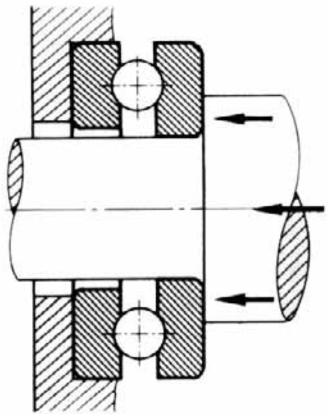

Thrust Ball Bearing

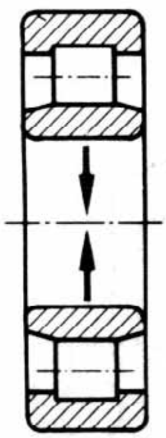

Cylindrical Roller Bearing

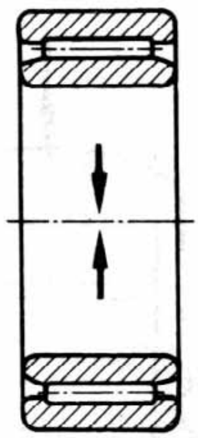

Needle Roller Bearing

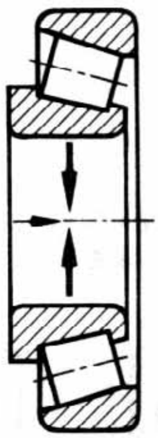

Taper Roller Bearing

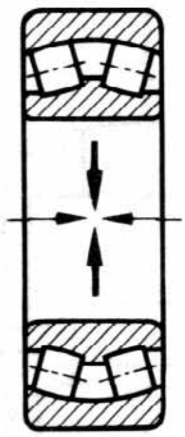

Spherical Roller Bearing

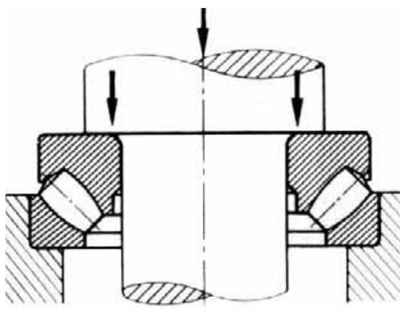

Spherical Roller Thrust Bearing

Note: The arrows show the possible load (radial, axial or combined)

3.4 Bearing Properties

Bearing Type	Loads	Comments
Deep Groove Ball Bearing	• High radial loads at very high speed • Combined loads	Most popular and cheap bearing. Used in a wide variety of applications. Simple in design, non-separable. High to very high speeds. Low friction and quit running. Double row available.
Angular Contact Ball Bearing	• Combined loads	Raceways in the inner and outer ring. Used in general engineering. Double row available as well as four point contact ball bearings. Suitable for combined loads
Self Aligning Ball Bearing	• Combined loads	Two rows of balls with a common spherical raceway in the outer ring. Particular suitable to correct misalignment.
Thrust Ball & Cylindrical Thrust Bearing	• Purely axial loads only	Are composed of washer-like bearing rings with raceway grooves for the balls. The ring attached to the shaft is called the inner ring or tight washer and the ring attached to the housing is called the outer ring or loose washer. Suitable for axial loads in one direction. But there are also double direction bearings available.
Cylindrical Roller Bearing	• Purely radial loads at high speed if there are no flanges • Moderate combined loads if flanges	Rollers are guided between integral flanges on one of the bearing rings. Suitable for high speeds and high radial load. Double row available. Inner and outer ring separable. Available in N (separable outer), NU (separable inner), NJ (separable inner, one direction), and NUP (non-separable).
Needle Roller Bearing	• Purely radial load	Roller bearing with cylindrical rollers, which are thin and long to their diameter. Best suitable for high radial loads with limited radial space.
Taper Roller Bearing	• Combines loads	Taper roller bearings have tapered inner and outer ring and tapered rollers. Separable designed. Double row bearings available.
Spherical Roller Bearing	• Combines loads	Two rows of rollers. Common raceway in the outer ring. Particular suitable to correct misalignment. Bearings available with cylindrical bore and tapered bore.
Spherical Roller Thrust Bearing	• Combined loads	Have a spherical raceway in the outer ring with the rollers diagonally arranged in a single row. These bearings have a very high axial load capacity and are capable of taking moderate radial loads. Capable of handling misalignment and are suited for moderate speed operation.

When selecting a rolling bearing the following points should be always considered:

Property	Comments
Loads	What kinds of loads are to expect with this type of machine? Is this bearing suitable for this application?
Misalignment	It is always important to align auxiliary drives exactly. But if misalignment is a permanent problem, then self-aligning bearings should be chosen.
Temperature	Is the chosen bearing suitable for the temperature condition? Especially plastic cages and plastic bearing seals are sensitive against higher temperatures.
Speed	Deep groove bearings are most suitable for very high speeds. But more speed means also more friction this could generate a temperature problem. There are special high speed/high precision bearings available.
Mounting & Dismounting	Mounting & Dismounting is a cost factor. Consider this if you design or redesign a machine. Bearings with cylindrical bore and separable parts are most suitable if dismounting is often required.
Available space	If there is a space problem deep groove bearings are useful when shaft is small. Needle roller bearings for radial loads only should also be considered.
Quit running	Especially deep groove ball bearings are designed for quit running. If noise is a factor, than consider choosing a bearing type with special design for quit run.
Stiffness	Roller bearings have a higher stiffness than ball bearings.
Axial displacement	If axial displacement (shaft is moving) is a problem, then bearings with the ability to stand combined loads should be selected. Or cylindrical/needle bearings with one flange.
Precision	Some machines, especially with high rotation need high precision bearings.

3.5 Bearing Designation System

3.5.1 Basics

Rolling bearings can be applied universally as ready-to-mount machine elements. This is especially due to the fact that the main dimensions of the popular bearings are standardized according ISO (International Standardization Organization).
In this chapter we like to enable you to understand the bearing designation system. For further information study the manufacturer catalogue.
The basic designation system consists of three, four or five figures of a combination of letters and figures.

The first letter (not the Prefix) represents the bearing type

0 Angular contact ball bearings, double row
1 Self-aligning ball bearings
2 Spherical roller bearings and spherical roller thrust bearings
3 Taper roller bearings
4 Deep groove ball bearings, double row
5 Thrust ball bearings
6 Deep groove ball bearings, single row
7 Angular contact bearings, single row
8 Cylindrical roller thrust bearings
N Cylindrical roller bearings (N = outer ring no groove; NU = inner ring no groove; NJ = only one shoulder on inner groove; NUP = only one shoulder on inner groove plus one loose inner flange)

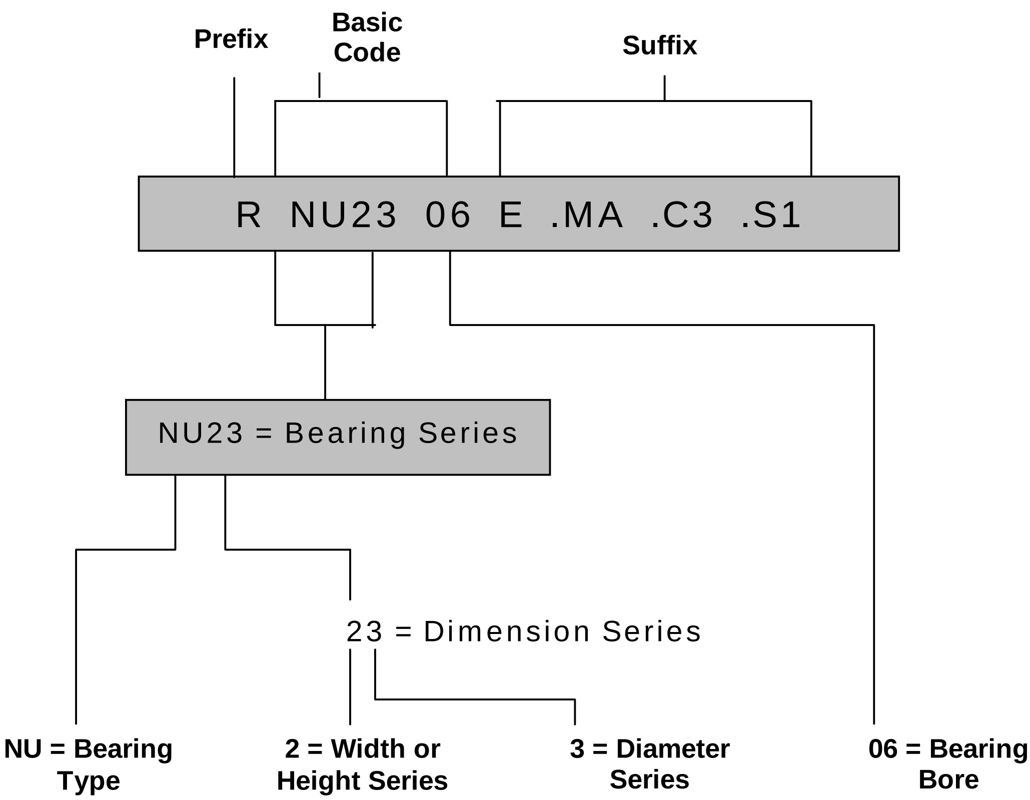

- The first figure of the two-digit number for the dimension series indicates the width series (the height series for thrust bearings) and the second figure the diameter series.
  Popular diameter series are 8, 9, 0, 1, 2, 3, 4 (increasing outside diameters in this order). There are several width series in each diameter series e.g. 0, 1, 2, 3, 4 (the higher the figure the greater the width).
- The last (or the last two numbers) indicate the bore diameter. Just multiply the number by 5 and you will get the bore diameter in mm.
  For bearings which have a bore diameter smaller than 10 mm and equal to or greater than 500 mm, the bore diameter is generally given in millimeters direct, the size identification being separated from the rest of the bearing designation by an oblique stroke, e.g. 618/8 (d = 8 mm) or 511/530 (d = 530 mm). This is also true of standard bearings to ISO 15, which have bore diameters of 22, 28 and 32 mm, e.g. 322/28 (d = 28 mm). Bearings with bore diameters of 10, 12, 15 and 17 mm have the following size identifications:
  00 = 10 mm
  01 = 12 mm
  02 = 15 mm
  03 = 17 mm
  For some deep groove, self-aligning and angular contact ball bearings having a bore diameter smaller than 10 mm, the bore diameter is also given in millimeters (un-coded) but is not separated from the basic designation by an oblique stroke, e.g. 629 or 129 (d = 9 mm).

3.6.2 Additional Designation Codes

Code for Bearing Bore Normally: Number x 5 = bore ∅	
Bore Reference number	**Bore ∅**
3 to 9	3 to 9 mm
00	10
01	12
02	15
03	17
04	20
96	480
/500	500
/530	530

Codes for special design characteristic	
A	New modified model
B	Internal design
DA	Spli inner ring
E	Reinforced design
K	Tapered Bore 1:12
K30	Tapered Bore 1:30
N	Groove for snap ring –outer ring
RSR	With one seal
2RSR	With two seals
S	Lubrication groove and holes – outer ring
ZR	With one dust shield
2ZR	With two dust shield

Suffix for cage design The cage suffixes P, H, A, B are often added to the material code	
F	Machines steel cage
L	Machined light metal cage
M	Machined brass cage
T	Machined cage of laminated textile
TV	Cage of polyamide
J	Pressed steel cage
Y	Pressed brass cage
P	Window type cage
H	Snap type cage
A	Outer lip riding
B	Inner lip riding

Code for accuracy and bearing clearance Precision and Clearance are often combined e.g. P52 = Precision P5 & Clearance C2	
Without suffix	Normal tolerance PN (PO) Normal bearing clearance
P6	Tolerance < PN (PO)
P5	Tolerance < P6
P4	Tolerance < P5
P4S	Reduced P4 tolerance
P2	Special precision
SP	Ultra Precision
C1	Bearing clearance < C2
C2	Bearing clearance < CN (CO)
C3	Bearing clearance > CN (CO)
C4	Bearing clearance > C3
C5	Bearing clearance > C4

Special codes e.g. for heat treatment	
S1 to S4	Special heat treatment, dimensionally stable above 150 degrees C.

3.6.3 Examples to Bearing designation

1st number	Deep groove ball bearing, single row
2nd number	Width series - 2
3rd number	Diameter series - 0
4th number	Bore hole: 6 x 5 = 30 mm

6206

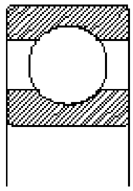

1st number	Angular contact bearing, single row
2nd number	Width series – 3
3rd number	Diameter series - 0
4th number	Bore hole: 5 x 5 = 25 mm

7305

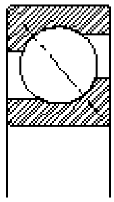

1st number	Taper roller bearing
2nd number	Width series – 0
3rd number	Diameter series - 2
4th number	Bore hole: 9 x 5 = 45 mm

30209

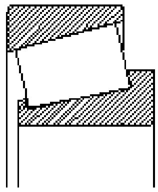

1st number	Cylindrical roller bearing
2nd number	/
3rd number	/
4th number	Bore hole: 17 x 5 = 85 mm
NU	No flange on inner ring. Flange on outer ring.

NU 417

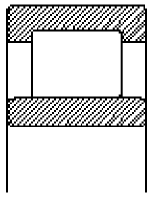

3.6 Internal Bearing Clearance

Bearings are designed with a specific internal clearance that measures the total clearance between the rings and the rolling elements. Internal clearance provides:

- Free rotation of rolling elements
- Compensation for thermal expansion
- Optimum load distribution

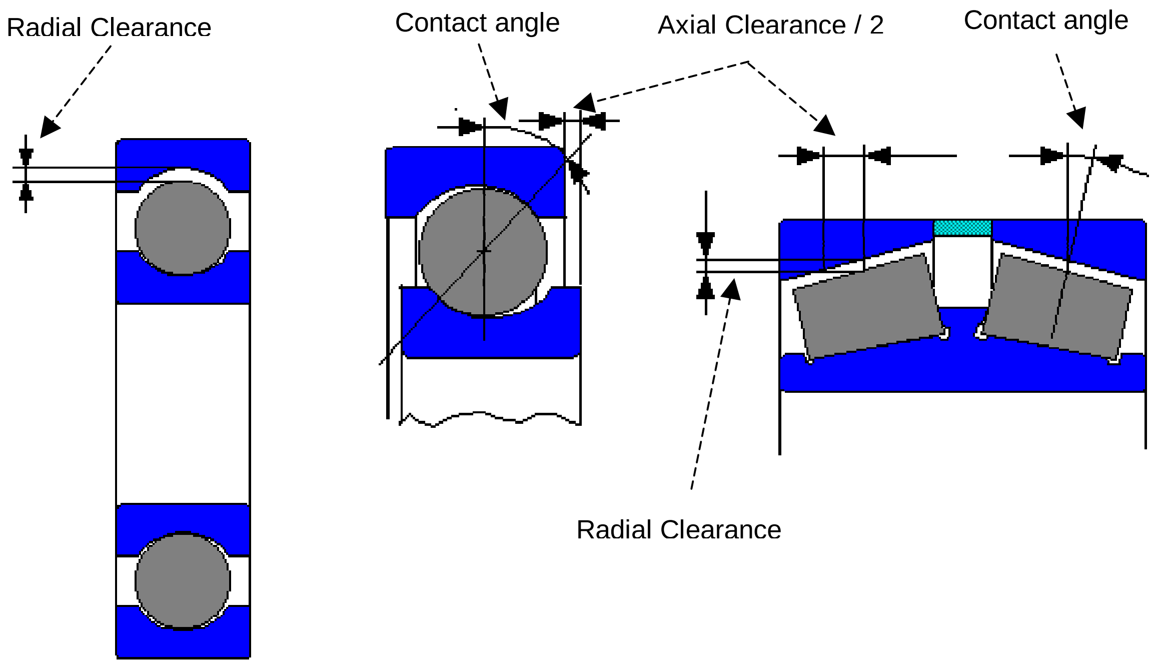

Choosing the correct internal clearance is important because bearings hold shafts, armatures, gears and other rotating devices in proper alignment. The amount of internal clearance influences noise, vibration, heat build-up and fatigue life. Impact loads, severe vibration, and ring fit also affect internal clearance. To obtain the optimal internal clearance for specific application, those parameters must be balanced.

Internal clearance can be separated into two categories: **radial and axial**. The total internal clearance is the amount that one ring can be displaced relative to the other ring, either radial or axial.

Radial clearance of Deep Groove Ball Bearing

Dimensions in mm

Nominal bore diameter									
	over	**2.5**	**6**	**10**	**18**	**24**	**30**	**40**	**50**
	to	**6**	**10**	**18**	**24**	**30**	**40**	**50**	**65**
Bearing clearance in microns (0.001 mm)									
Clearance group C2	min	0	0	0	0	1	1	1	1
	max	7	7	9	10	11	11	11	15
Clearance group CN (normal)	min	2	2	3	5	5	6	6	8
	max	13	13	18	20	20	20	23	28
Clearance group C3	min	8	8	11	13	13	15	18	23
	max	23	23	25	28	28	33	36	43
Clearance group C4	min		14	18	20	23	28	30	38
	max		29	33	36	41	46	51	61

3.7 Tolerance of Housing and Shaft

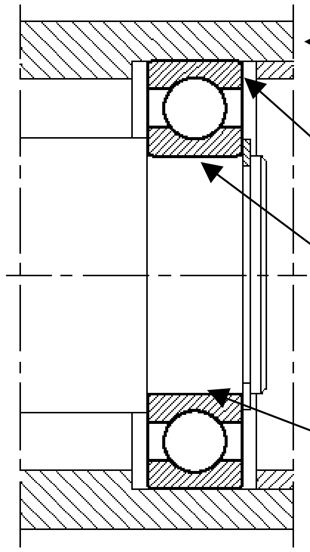

Even a properly selected bearing will fail prematurely if the shaft and housing fits are incorrect. Too much or too little interference between the mating parts can cause early failure. This becomes even more critical when bearings are replaced. A failed bearing can damage the shaft and housing, causing them to be out of tolerance.
A loose fit between the shaft and bearing inner ring (or the housing and the outer ring) can lead to relative movement, or "creep" between these parts. Creep wears out the mating surfaces, increasing the clearance between them. Eventually, the process can generate abnormal heat and vibration and possible contamination from wear particles.

At the other end of the spectrum, excessive interference causes other problems that can decrease service life. Two key concerns are fracturing the inner ring and reducing the bearing's internal clearance. Too much interference builds high stress, which can sometimes fracture inner rings.
Also, an interference fit can decrease the internal clearance of a bearing due to growth of the inner ring or shrinkage in the outer ring. When the interference is too great, internal clearance becomes negative, resulting in excessive heat buildup and premature bearing failure.

Proper fit selection has a narrow margin for error. As a rule of thumb, the rotating part should have the interference fit. To specify the correct fit, the main factors that influence fit recommendations should be understood:

Which ring rotates, the inner or outer one? Is the load stationary? These factors determine which ring should have the interference fit. There are three possible combinations:

- Tight (or interference) fit on the inner ring - a common approach
- Tight fit on the outer ring - also common
- Tight fit on both rings - rarely seen

Normal fits for engineering are:

	Shaft	Housing
Ball bearings	j5...k5	H6...J7
Roller bearings	k5...m5	H7...M7

Examples to show how narrow the tolerances are:

Ball Bearing	Bearing Dimension	Shaft Tolerance j5	Housing Tolerance H6
61804	d = 20 mm D = 32 mm	+ 0.005 mm - 0.004 mm	+ 0.016 - 0 mm
6320	d = 100 mm D = 215 mm	+ 0.006 mm - 0.009 mm	+ 0.029 - 0 mm

3.8 Bearing Arrangement

Locating and Floating Arrangement

In order to guide and support a rotating shaft, at least two bearings are required, which are arranged at a certain distance from each other. A bearing arrangement with locating and floating bearings can be selected, depending on the case. The floating bearing has the function to compensate the moving of the shaft because of the thermal expansion during operation.

Cylindrical roller bearings of N and NU designs are ideal floating bearings. These bearings allow the roller and cage assembly to shift on the raceway of the lipless bearing ring.
All other bearing types, e.g. deep groove ball bearings and spherical roller bearings only function as floating bearings when one bearing ring is provided with a loose fit. The ring under point load is therefore given a loose fit; this is generally the outer ring.

Locating Bearing Deep Groove Ball Bearing | **Floating Bearing Cylindrical Roller Bearing NU**

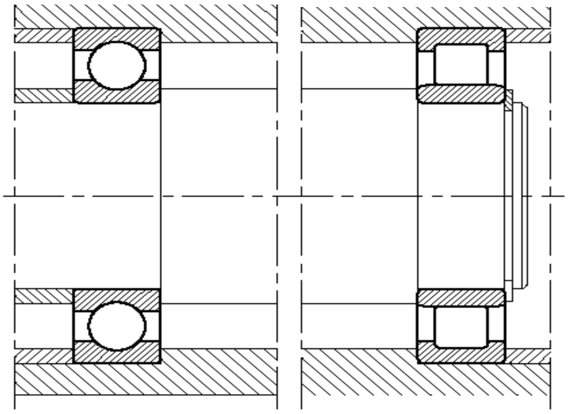

Adjusting Bearing Arrangement

As a rule, an adjusted bearing arrangement consists of two symmetrically arranged angular contact ball bearings or tapered roller bearings. This arrangement is particularly suitable for those cases in which a close guidance is required.
Adjusted bearing arrangements are also possible by preloading with springs. This elastic type of adjustment compensates for heat expansion. They are also used when bearings are in danger of vibrations when stationary.

Adjusted Angular Ball Bearings in "O" Arrangement

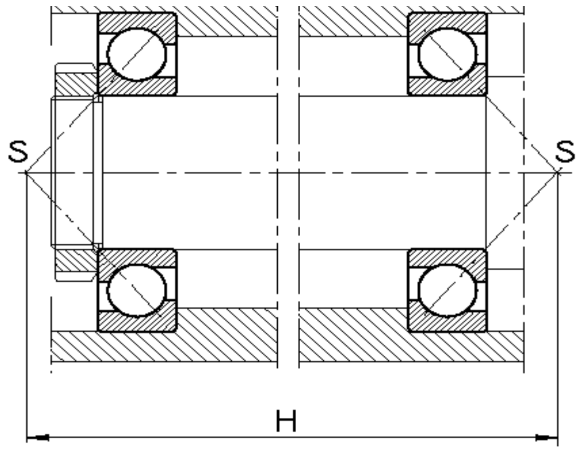

Floating Bearing Arrangement

The floating bearing arrangement is an economical solution where a close axial guidance of the shaft is not required. Its design is similar to that of the adjusted bearing arrangement. In a floating bearing arrangement, the shaft, however, can shift by the axial clearances relative to the housing. Deep groove ball bearings, self-aligning ball bearings and spherical roller bearings, for example, are bearing types, which are suitable for the floating bearing arrangement. One ring of both bearings - generally the outer ring - is fitted to allow displacement.

Floating Bearing Spherical Roller bearing

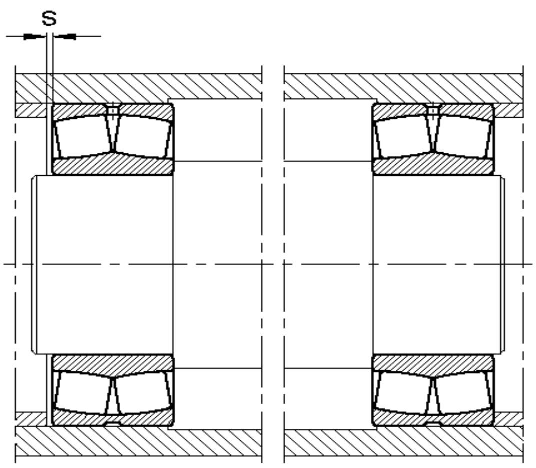

Arrangement of Angular Contact Bearings

Single row angular contact ball bearings of universal design are intended for mounting in pairs, either in X arrangement (face to face), O arrangement (back to back) or T arrangement (tandem) or for group mounting.

O-Arrangement: Two angular contact bearings are mounted with the pressure center of the left-hand bearing pointing to the left and the pressure center of the right-hand bearing pointing to the right. With the O-arrangement the bearing clearance is obtained by adjusting the inner ring.

X-Arrangement: Two angular contact bearings are mounted with the pressure center of the left-hand bearing pointing to the right and the pressure center of the right-hand bearing pointing to the left. With the X-arrangement the bearing clearance is obtained by adjusting the outer ring.

Tandem-Arrangement: Two angular contact bearings are mounted with the contact lines parallel. The thrust load is evenly distributed between the bearings.

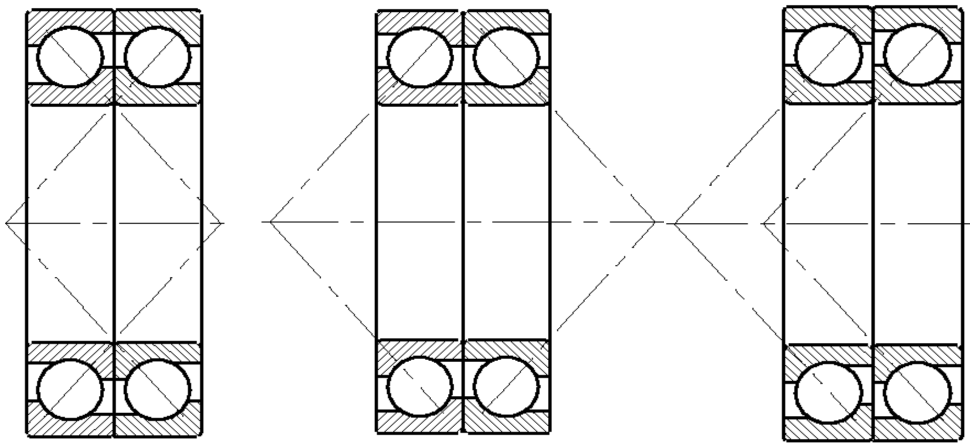

X-Arrangement **O-Arrangement** **Tandem-Arrangement**

3.9 Axial Location of Bearings

Locating bearings and floating bearings

Locating bearings have to accommodate axial forces, which the holding element has to stand. Examples of holding elements are: shoulders on shafts and housings, snap rings, housing covers, shaft end caps, nuts, spacers, etc.

Floating bearings

They have to transmit only small axial forces resulting from thermal expansions so that the axial location has to prevent lateral displacement of the ring. A tight fit frequently does the job. With non-separable bearings, only one ring has to be firmly fitted; the other ring is held by the rolling elements.

Adjusted and floating bearing arrangements

Since adjusted and floating bearing arrangements transmit axial forces only in one direction, the bearing rings need to be supported only on one side. Another bearing, which is symmetrically arranged, accommodates the opposite force. Locknuts, ring nuts, covers or spacers are used as adjusting elements. In floating bearing arrangements, the movement of the rings to the side is restricted by shaft or housing shoulders, covers, snap rings etc.

3.9.1 Bearing with cylindrical bore

Axial adjustment:

- using a shoulder of a shaft: a, b, c, d, e, f
- using a shaft nut or an end plate or an thread ring: a, b, d, f,
- using a house end cover: c
- using spacer sleeves or collars: c, f
- using a snap ring: e, f

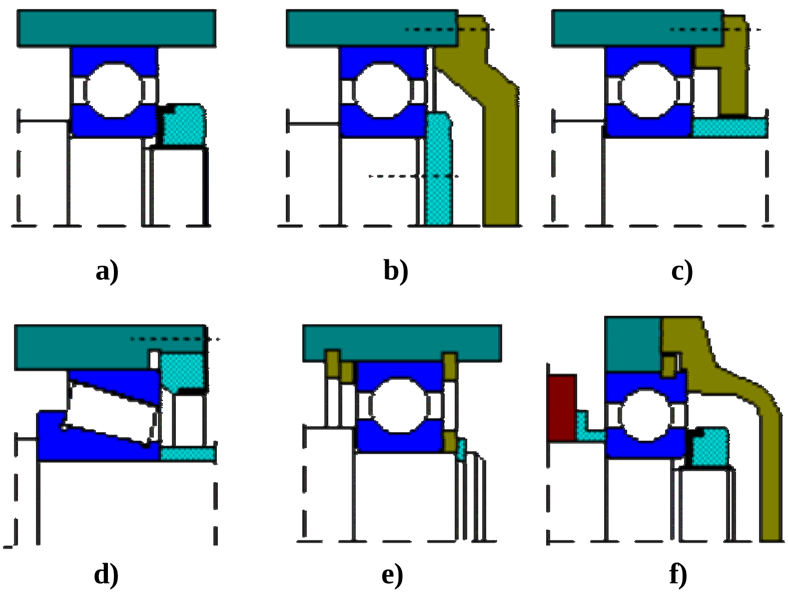

3.9.2 Bearing with tapered bore

Axial adjustment:

- using a shoulder of a shaft and a shaft nut: **a)**
- using a spacer ring and a mounting sleeve with shaft nut: **b)**
- using a mounting sleeve and a shaft nut: **c)**
- using an end plate and a withdrawal sleeve and a shaft nut: **d)**

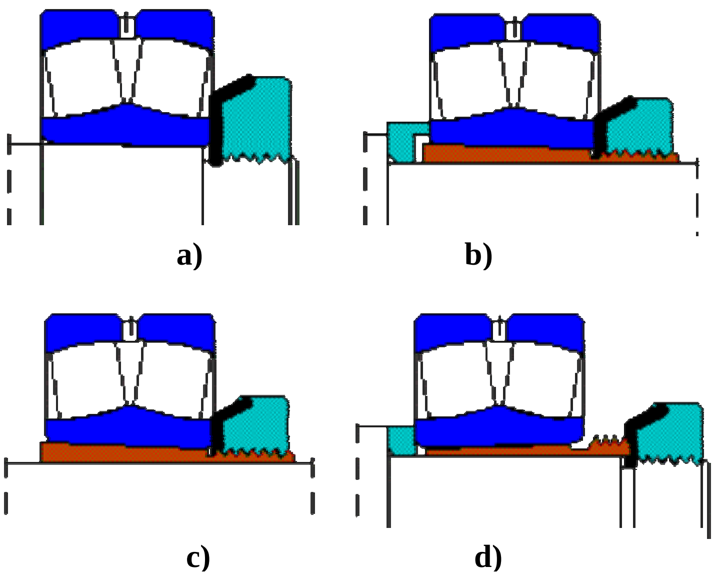

3.10 Mounting Rolling Bearings

Just to make you aware on how accurate bearings are manufactured and therefore to be treated with care, study the table below.

Tolerance of Bearing Fabrication - Example with Ball Bearing 6202 (d=15 mm, D=35 mm)

Tolerance Classes	Inner Ring	Outer Ring
PN	0 -0.008 mm	0 -0.011 mm
P6	0 -0.007 mm	0 -0.009 mm
P5	0 -0.005 mm	0 -0.007 mm
P4	0 -0.004 mm	0 -0.006 mm

3.10.1 Before Mounting

- All the necessary parts, tools and equipment should be at hand
- Drawings or instructions should be studied to determine the correct order in which to assemble the various components.
- Housings, shafts and other components of the bearing arrangement should be checked to see that they are clean, particularly any threaded holes, leads or grooves where chips of previous machining operations might have collected. Burrs should be removed.
- The dimensions of all components, which will be in contact with the bearing, should be checked. The diameter of cylindrical shaft and housing seats is usually checked using a micrometer gauge either outside or inside type. Tapered bearing seats are checked using ring gauges or special taper gauges, which, can be supplied by the manufacturer.
- In many cases it is advisable to keep a record of the measurements. When measuring it is important that the components being measured and the measuring instruments have approximately the same temperature. This means that it is necessary to leave the components and measuring equipment together in the same place to reach the same temperature.
- The bearings should be left in their original packages until immediately before mounting so that they do not become dirty. Normally, the preservative with which new bearings are coated before leaving the factory need not be removed; it is only necessary to wipe it off the outside cylindrical surface and from the bore. If, however, the bearing is to be grease lubricated and used at very high or very low temperatures, or if the grease is not compatible with the preservative, it is necessary to wash and carefully dry the bearing.
- If there is a risk that the bearings have become contaminated because of improper handling (damaged packaging etc.), they should be washed before mounting. Any bearing which, when taken from its original packaging, is covered by a relatively thick, greasy layer of preservative (this may be the case for some large-size bearings with D >= 420 mm) should also be washed and dried.
- Bearings, which are supplied ready greased and which have integral seals or shields at both sides should never be washed before mounting.

3.10.2 Mounting

Skill and cleanliness when mounting ball and roller bearings are necessary to ensure correct bearing performance and prevent premature failure.

- Anything that may come into contact with bearings should be kept clean, including workers' hands, benches, tools, solvents, and cloths. Perspiration, condensation - any type of moisture should also be kept away from bearings. Handle bearings with clean cloths.
- When bearings have to be mounted in unprotected places, which is often the case with large bearings, steps should be taken to protect the bearing and mounting position from contamination by dust, dirt and moisture until installation has been completed. This can be done by covering bearings, machine components etc. with waxed paper or foil.
- Avoid nicks - and damage from compressed air. Use extreme caution when using compressed air around bearings. Compressed air is a source of moisture, which can cause corrosion in bearings.
- Depending on bearing type and size, **mechanical, hydraulic or thermal methods** are used for mounting. Make every effort to avoid nicking bearings, which can be caused by striking them with hardened steel tools or sharp objects. Even though bearings are heat-treated, surfaces are brittle and fractures can easily occur. Nicks on the exposed surfaces can cause bearings to be improperly mounted, which will reduce bearing life.
- Never apply major loads through the ball complement when mounting bearings.
- Prevent loose particles from falling into bearings while being mounted. This danger might occur on a hydraulic press or while using the drift tube technique.
- In heating bearings for easier mounting heating temperatures should, in general, **not exceed 100 degrees Celsius**. There are several heaters available (e.g. Induction heaters, Heating oven or aluminum heating rings). Because of economical reasons, use the best fitting heating-device to heat the bearings.

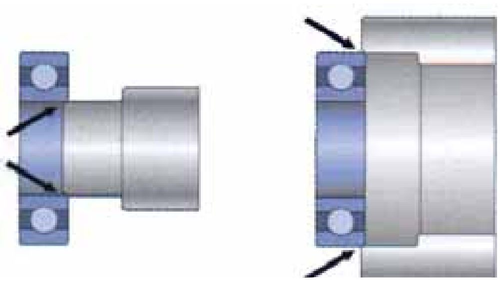

Shaft and Housing Interference Fit

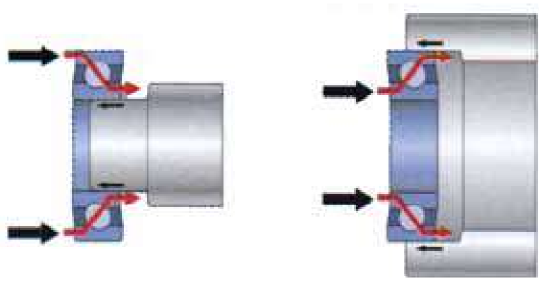

Wrong! Uneven distributing of forces can result in raceway damage

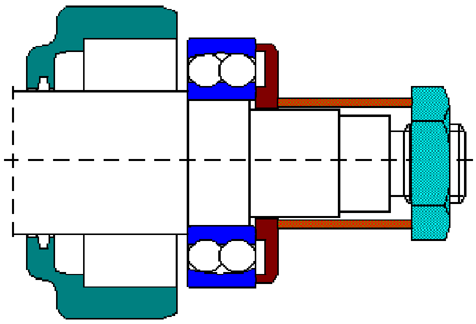

Screw down method

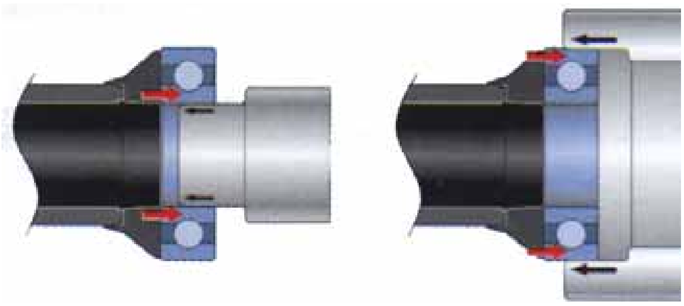

Use the correct tools to prevent raceway damage

Mounting Tapered Bearings

The bearing or the sleeve has to move from the zero-position to the final position

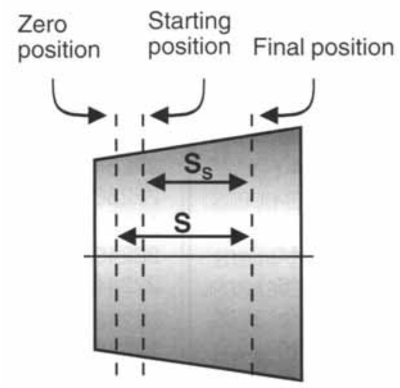

Manual Mounting with a) Hookspanner or b) Impact spanner

a)

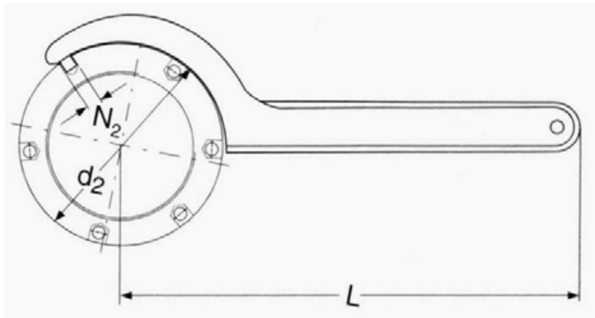

b)

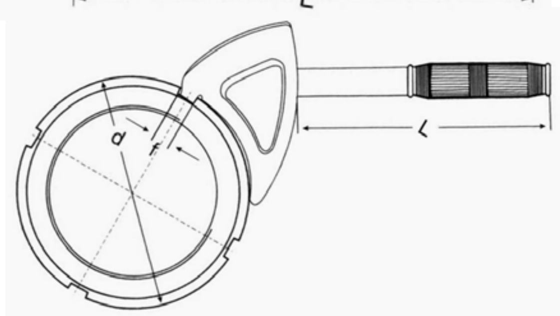

Mounting with Hydraulic Equipment

a) **Set up - ready to mount**
b) **Mount on a sleeve**
c) **Two sliding surfaces**
d) **Two sliding surfaces**

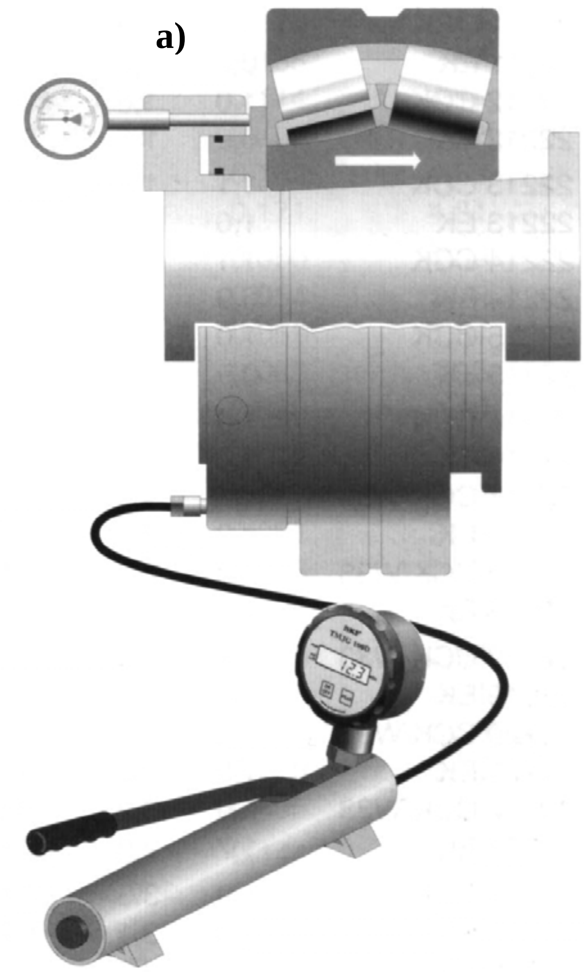

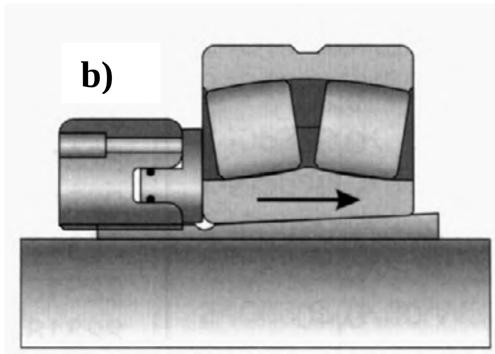

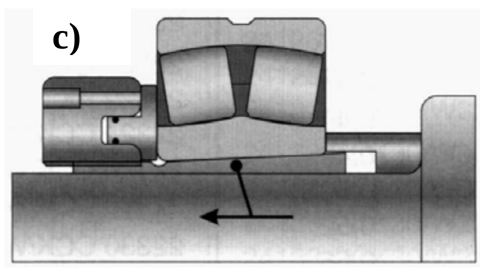

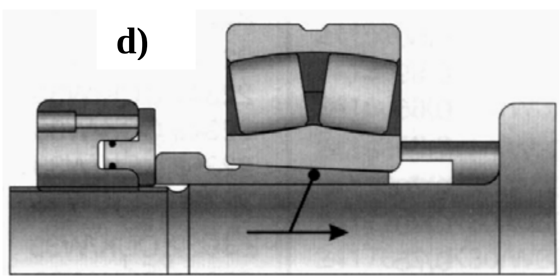

By driving up the inner ring on the shaft or sleeve, the tight fit required is obtained and is measured by checking the radial clearance reduction due to the expansion of the inner ring or by measuring the axial drive-up distance. Feeler gauges are suitable accessories for measuring the radial clearance.

With spherical roller bearings the radial clearance must be measured across both roller rows

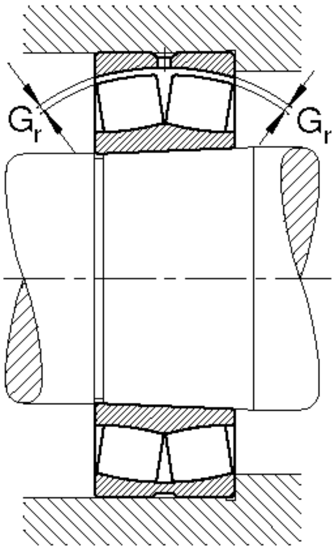

Radial clearance reduction in sherical roller taper 1:30

Nominal bearing bore		Reduction of the bearing clearance		Axial displacement on taper 1:30				Check values for the smallest radial clearance after mounting		
d				Shaft		Sleeve		CN	C3	C4
over mm	to	min mm	max	min mm	max	min	max	min mm	min	min
80	**100**	0.045	0.06	1.7	2.2	1.8	2.4	0.035	0.05	0.08
100	**120**	0.05	0.07	1.9	2.7	2	2.8	0.05	0.065	0.1
120	**140**	0.065	0.09	2.7	3.5	2.8	3.6	0.055	0.08	0.11
140	**160**	0.075	0.1	3	4	3.1	4.2	0.055	0.09	0.13
160	**180**	0.08	0.11	3.2	4.2	3.3	4.6	0.06	0.1	0.15
180	**200**	0.09	0.13	3.5	4.5	3.6	5	0.07	0.1	0.16
200	**225**	0.1	0.14	4	5.5	4.2	5.7	0.08	0.12	0.18
225	**250**	0.11	0.15	4.2	6	4.6	6.2	0.09	0.13	0.2
250	**280**	0.12	0.17	4.7	6.7	4.8	6.9	0.1	0.14	0.22
280	**315**	0.13	0.19	5	7.5	5.2	7.7	0.11	0.15	0.24
315	**355**	0.15	0.21	6	8.2	6.2	8.4	0.12	0.17	0.26
355	**400**	0.17	0.23	6.5	9	6.8	9.2	0.13	0.19	0.29
400	**450**	0.2	0.26	7.7	10	8	10.4	0.13	0.2	0.31
450	**500**	0.21	0.28	8.2	11	8.4	11.2	0.16	0.23	0.35
500	**560**	0.24	0.32	9.2	12.5	9.6	12.8	0.17	0.25	0.36
560	**630**	0.26	0.35	10	13.5	10.4	14	0.2	0.29	0.41
630	**710**	0.3	0.4	11.5	15.5	12	16	0.21	0.31	0.45
710	**800**	0.34	0.45	13.3	17.5	13.6	18	0.23	0.35	0.51
800	**900**	0.37	0.5	14.3	19.5	14.8	20	0.27	0.39	0.57
900	**1000**	0.41	0.55	15.8	21	16.4	22	0.3	0.43	0.64
1000	**1120**	0.45	0.6	17	23	18	24	0.32	0.48	0.7
1120	**1250**	0.49	0.65	18.5	25	19.6	26	0.34	0.54	0.77

Radial clearance reduction in sherical roller taper 1:12

Nominal bearing bore		Reduction of the bearing clearance		Axial displacement on taper 1:12				Check values for the smallest radial clearance after mounting		
d				Shaft		Sleeve		CN	C3	C4
over mm	to	min mm	max	min mm	max	min	max	min mm	min	min
30	**40**	0.02	0.025	0.35	0.4	0.35	0.45	0.015	0.025	0.04
40	**50**	0.025	0.03	0.4	0.45	0.45	0.5	0.02	0.03	0.05
50	**65**	0.03	0.04	0.45	0.6	0.5	0.7	0.025	0.035	0.055
65	**80**	0.04	0.05	0.6	0.75	0.7	0.85	0.025	0.04	0.07
80	**100**	0.045	0.06	0.7	0.9	0.75	1	0.035	0.05	0.08
100	**120**	0.05	0.07	0.7	1.1	0.8	1.2	0.05	0.065	0.1
120	**140**	0.065	0.09	1.1	1.4	1.2	1.5	0.055	0.08	0.11
140	**160**	0.075	0.1	1.2	1.6	1.3	1.7	0.055	0.09	0.13
160	**180**	0.08	0.11	1.3	1.7	1.4	1.9	0.06	0.1	0.15
180	**200**	0.09	0.13	1.4	2	1.5	2.2	0.07	0.1	0.16
200	**225**	0.1	0.14	1.6	2.2	1.7	2.4	0.08	0.12	0.18
225	**250**	0.11	0.15	1.7	2.4	1.8	2.6	0.09	0.13	0.2
250	**280**	0.12	0.17	1.9	2.6	2	2.9	0.1	0.14	0.22
280	**315**	0.13	0.19	2	3	2.2	3.2	0.11	0.15	0.24
315	**355**	0.15	0.21	2.4	3.4	2.6	3.6	0.12	0.17	0.26
355	**400**	0.17	0.23	2.6	3.6	2.9	3.9	0.13	0.19	0.29
400	**450**	0.2	0.26	3.1	4.1	3.4	4.4	0.13	0.2	0.31
450	**500**	0.21	0.28	3.3	4.4	3.6	4.8	0.16	0.23	0.35
500	**560**	0.24	0.32	3.7	5	4.1	5.4	0.17	0.25	0.36
560	**630**	0.26	0.35	4	5.4	4.4	5.9	0.2	0.29	0.41
630	**710**	0.3	0.4	4.6	6.2	5.1	6.8	0.21	0.31	0.45
710	**800**	0.34	0.45	5.3	7	5.8	7.6	0.23	0.35	0.51
800	**900**	0.37	0.5	5.7	7.8	6.3	8.5	0.27	0.39	0.57
900	**1000**	0.41	0.55	6.3	8.5	7	9.4	0.3	0.43	0.64
1000	**1120**	0.45	0.6	6.8	9	7.6	10.2	0.32	0.48	0.7
1120	**1250**	0.49	0.65	7.4	9.8	8.3	11	0.34	0.54	0.77

3.11 Dismounting

In general we can say, that if bearings are to be used again after removal, the force used to dismount them must on no account be applied through the rolling elements.

3.11.1 Dismount bearings with cylindrical bore

If the bearings are to be used again, the extraction tool should be applied to the tightly fitted bearing ring. With non-separable bearings, the following procedure is recommended:

- If the outer ring is tightly fitted, the bearing and the housing are removed from the shaft and then the bearing is extracted from the housing by pressing off the outer ring.
- If the inner ring is tightly fitted, the shaft with the bearing is removed from the housing and then the inner ring pressed off.

Common dismounting tools:

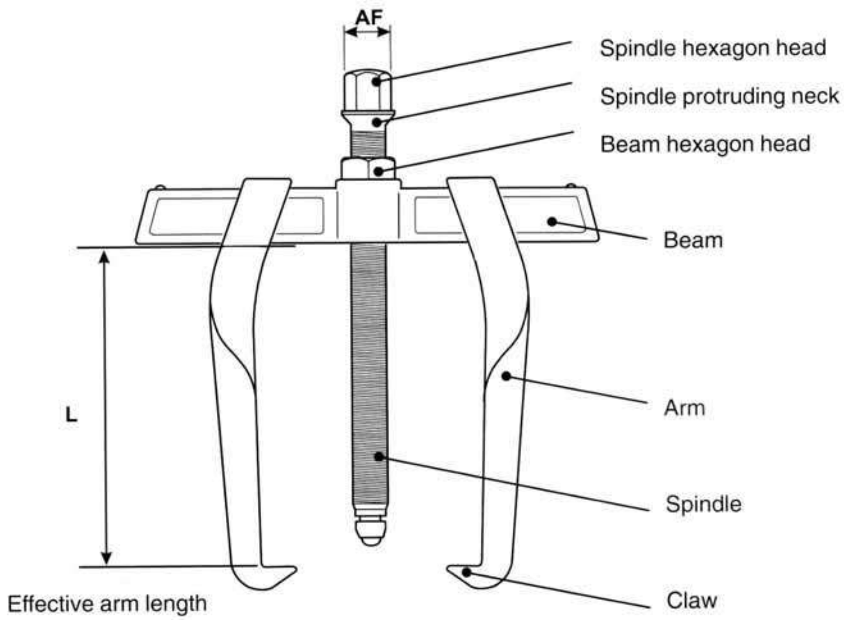

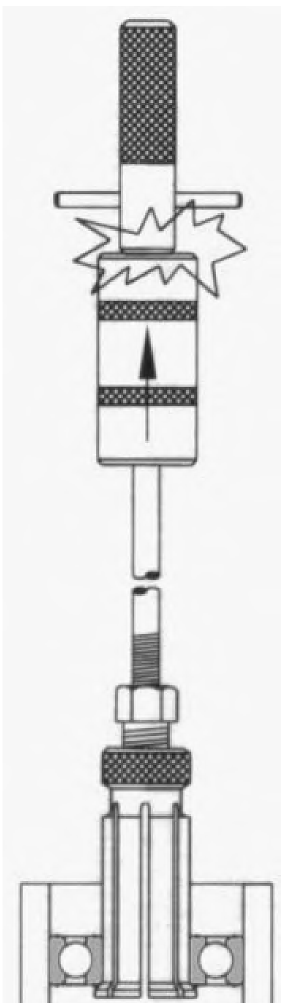

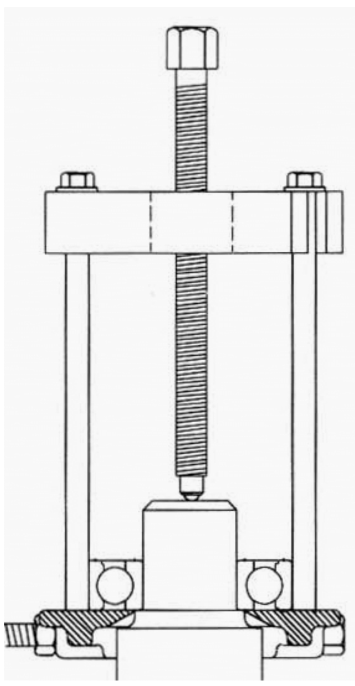

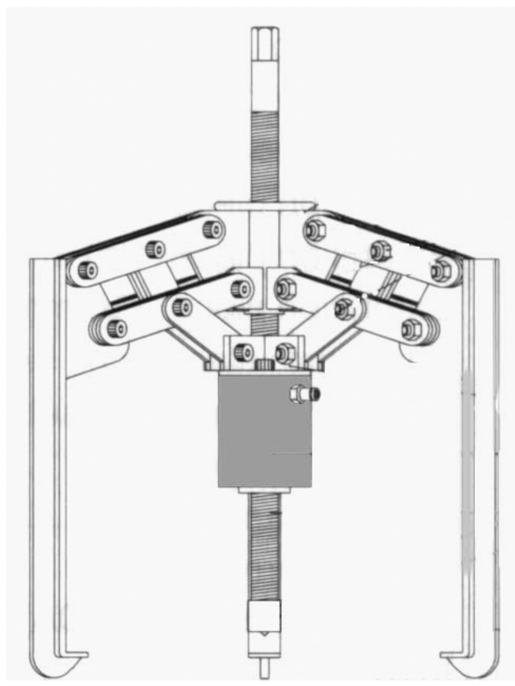

With separable bearings, the ring with the rolling element and cage assembly can be removed independently of the other ring. The inner ring can be removed using a “Heating Ring”. If the method with the heating ring will not work, than it is possible to grind carefully the inner ring on the shaft. Through the tension, given from the interference fit, the inner ring will split. But take care of the shaft!

3.11.2 Dismounting Bearings with tapered adapter sleeves – 5 Methods

a) The inner ring is driven off the sleeve using a metal drift or a piece of tubing.
b) Dismounting a withdrawal sleeve with an extraction nut.
c) Dismounting with nut and thrust bolts applied to the inner ring via a washer.
d) Dismounting a withdrawal sleeve with a hydraulic nut.
e) Dismounting a spherical roller bearing from the withdrawal sleeve with the hydraulic method. Oil is pressed between the surfaces of the bearing and sleeve. The withdrawal sleeve is released abruptly. (Not shown in the picture)

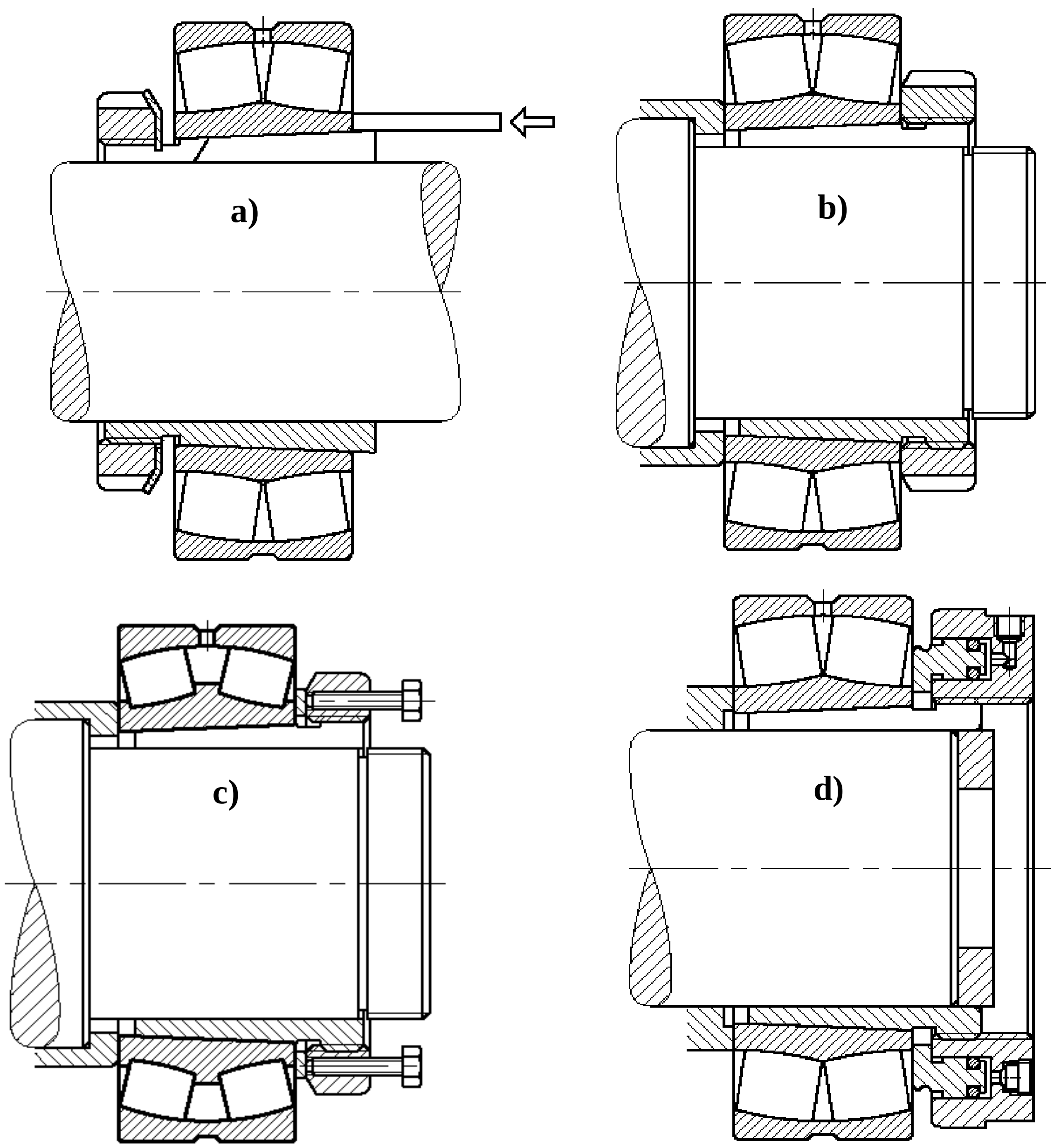

3.12 Storage

Before the manufacturer will pack the bearings, they are normally treated with a rust preventive compound. To preserve your bearing properly, do not unwrap it until you are ready to mount it. A tag on the outside of the packaging carries the exact part number and normally a serial number as well. Record this information when you receive the bearing, along with its arrival date. In this way they can be stored in a cool and dry place for several years. But there are some critical points to consider:

- The humidity should not exceed 60 %. Moisture can cause problems.
- The storage rack should be free of permanent vibration. Otherwise the balls or rollers will rock against the outer ring with each vibration. This can lead to so called ”flat spots” and damage the bearing.
- Bearings with side shields and lifetime lubrication are also problematic to store for a long time. The grease properties can change during the years.

Bearings, which are not stored in their original packages, should be well protected against corrosion and contamination. Large rolling bearings should only be stored lying down, and preferably with support for the whole extent of the side faces of the rings. If kept in a standing position, the weight of the rings and rolling elements can give rise to permanent deformation because the rings are relatively thin-walled.

4. SEALS

The purposes of seals are:

- To prevent dirt, dust and moisture from penetrating inside the protected housing.
- To ensure that gases, liquids and other materials capable of flow cannot escape.
- To keep different materials stored in different sections of the housing separated (for example water and oil in water pumps)

Classification of Seals:

Classification	Sub-Group	Type of Seal
Static Seals		• Face seals (Gasket, Sealing Compound) • O-Ring
Dynamic Seals	**Non Rubbing Seals**	• Gap type seals • Labyrinth seals • Baffle plates • Lamellar rings • Bearing with shields ZR • Gaiters
	Rubbing Seals	• Mechanical seals • Felt rings or felt strips • Radial shaft seals • V-rings • Spring seals • Bearing with seals RS • Packings

Seals are used in billions of machines, appliances and vehicles. They get in contact with thousands of different products and fluids. The environmental factors are as well to consider when choosing a material of a seal. The following questions should be frequently asked before choosing seals material. Remember, choosing all the times the "best" material will raise your maintenance cost.

Duty:
- Medium?
- Concentration of medium?
- Max. Pressure?
- Min. Pressure (Vacuum)?
- Max. Temperature?
- Min. Temperature?
- Liquid or Gas?
- Vibration?
- Abrasion?

4.1 Static Seals

Face seals (Gaskets)

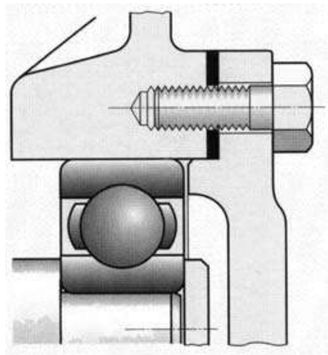

They are able to compensate slight surface irregularities and able of making a tight seal if the surface is slightly distorted. In some cases they are required to transmit and uniformly distribute pressing forces produced by the clamping devices (for example screws).
Where loads are light the seals can be a **gasket** made of paper, oiled paper or pressed board. Gasket compounds can mostly replace paper seals. On surfaces containing severe machining grooves or score-marks, the paper gasket makes a better seal if it is coated with a suitable **sealing compound** as well. Permanently elastic sealing compounds and those, which harden after application are available.
Asbestos-metal woven fabric is suitable as a sealing material for high temperatures and pressures. The surface can be covered additionally with metal foil, for example copper as used on cylinder head gaskets. Cork-chloroprene rubber (Neoprene”) and cork-silicone rubber seals remain highly flexible under heavy pressure loads, and are resilient when the load is removed. The rubber encloses the individual cells of the cork completely, and forms a bond between them. These materials are used as seals for hydraulic equipment and transmissions

O-Ring

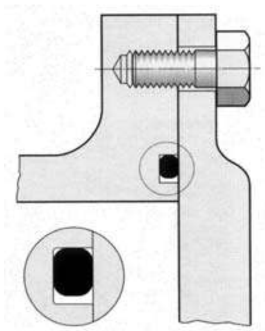

Round-section seals (0-rings) are ring-shaped seals of circular cross-section. They are manufactured from soft, permanently elastic plastics, for example nitrile butadiene rubber, and used for sealing both stationary and moving parts. They should be treated with care and not be accidentally twisted on assembly. The sealing action is produced by deformation of the round sealing ring.

4.2 Dynamic Seals

4.2.1 Non-Rubbing Seals:

The only friction arising with non-rubbing seals is the lubricant friction in the lubricating gap. The seals do not show any wear and can function for a long time. Since non-rubbing seals do not generate any heat, they are suitable for very high speeds.

Labyrinth Ring

Labyrinths (b), whose gaps are filled with grease, have a far greater sealing effect. If the environment is dirty, grease is pressed from the inside into the sealing gaps in short time intervals.

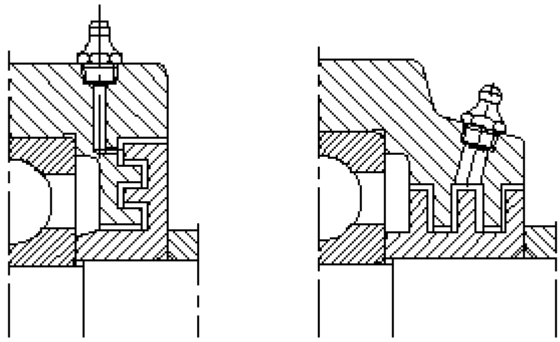

Lamellar Rings
Lamellar rings of steel (f) with spring disks to the outside or to the inside need a small mounting space. They seal against grease loss and dust penetration and are also used as a seal against splashing water.

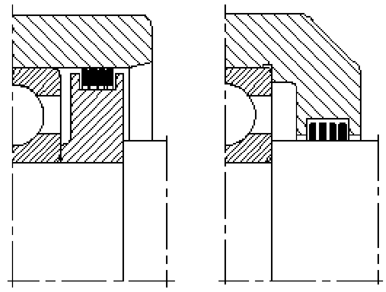

Flexible Gaiters
Flexible gaiters or bellows of synthetic material protect bearing points against penetration by dust and dirt. They often contain the grease for lubrication of a pivot. They are used at the steered wheels of vehicles and on rear axle shafts (Figure

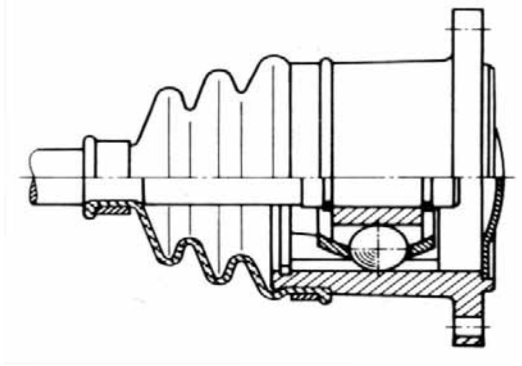

Sealing Gap
A simple method of protection which is frequently adequate, is a narrow sealing gap between shaft and housing

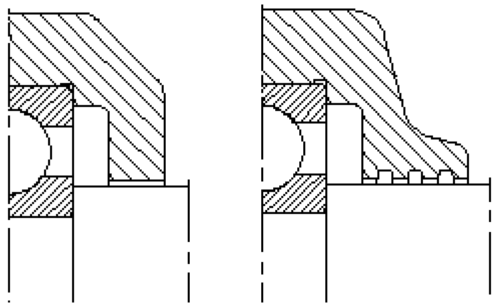

Baffle Plates
Prevent grease from escaping from the bearing. The grease collar, which forms at the sealing gap, protects the bearing from contaminants.

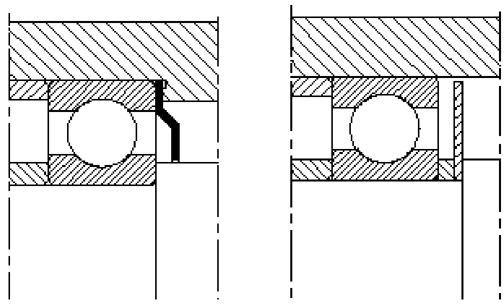

4.2.2 Rubbing Seals:

Rubbing seals contact their metallic running surfaces under a certain force (usually radial). This force should be kept to a minimum to prevent excessive increases in the frictional moment and the temperature. The lubrication condition at the contact surface, the roughness of the contact surface, and the sliding velocity also influence the frictional moment and the temperature as well as the seal wear.

Mechanical Seals

A mechanical seal is a containment device. It prevents leakage. It keeps contents from leaking out and contaminants from leaking in. It operates under dynamic, not static conditions. Instead of directly sealing the rotating shaft as packing does, a mechanical seal's sealing surfaces are between a pair of faces, one rotating, the other stationary. The mechanical seal remains the most cost effective method for sealing a rotating shaft. They can be found on equipment with rotating shafts, such as pumps, agitators, mixers, automotive engines, and compressors. Common examples of where mechanical seals are used include:

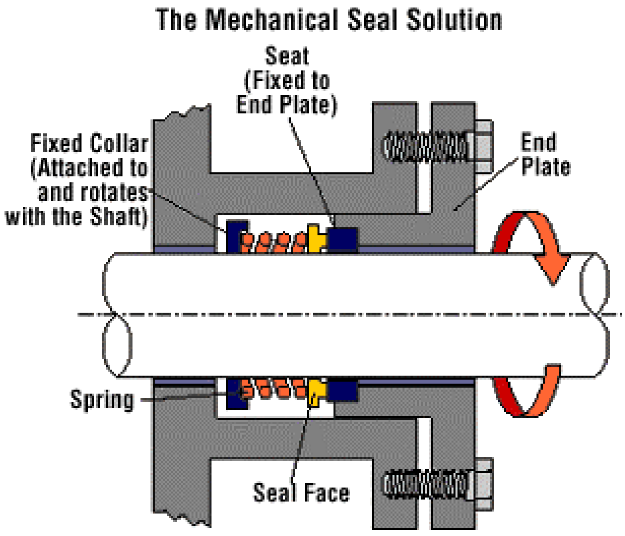

Water pump in appliances or automobiles; Air conditioning compressors; Oil pipeline pumps; Pharmaceutical mixers; Wastewater treatment pumping stations …….

Packings

Packings (gland or stuffing-box seals) are used on shafts and spindles to keep chambers or cylinders at different pressures or containing different materials separate from one another. Packings can be made from fibrous materials, metal fibers, soft metals or elastic sealants. The original solution for sealing a rotating shaft was to use packing. This was the standard method of sealing pumps before the 1950's. As operating conditions became more demanding and pumps were used on a greater variety of fluids, mechanical seals were designed to handle these conditions.

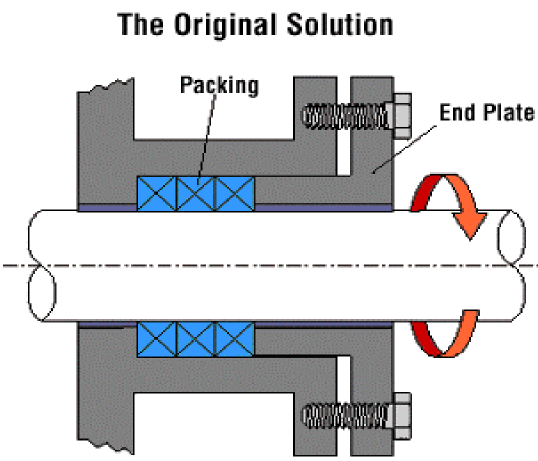

Felt Rings

Felt rings (a) are simple sealing elements which prove particularly successful with grease lubrication. They are soaked in oil before mounting, and are an especially good means of sealing against dust. If environmental conditions are adverse, two felt rings can be arranged side by side.

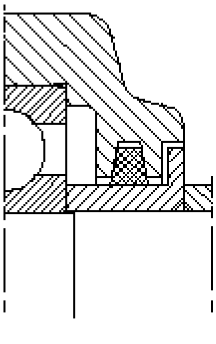

Spring Seals

Spring seals are highly efficient for grease lubrication. They consist of thin sheet metal and are clamped to the face of the inner or the outer ring while the sealing edge contacts the other ring under slight tension.

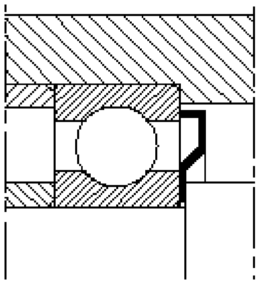

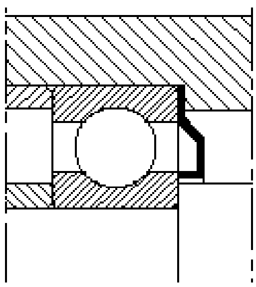

Sealing Washer

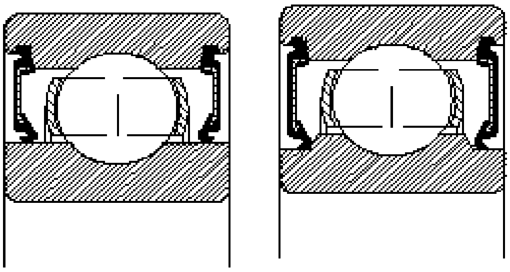

Simple designs are possible with bearings with one or two sealing washers. The washers are suitable to seal against dust, dirt, a moist atmosphere, and slight pressure differences. They are maintenance-free bearings with two sealing washers and a grease filling. The most commonly used sealing washer design is 2RSR made of acrylo-nitrile-butadiene rubber (NBR) for deep groove ball bearings is lightly pressed on the ground inner ring. Design 2RS for very small deep groove ball bearings contacts a chamfer at the inner ring faces.

V-Ring

The V-ring is a lip seal with axial effect. During mounting, this one-piece rubber ring is pushed onto the shaft under tension until its lip contacts the housing wall. Axial lip seals are insensitive to radial misalignment and slight shaft inclinations. With grease lubrication, rotating V-rings are suitable for circumferential velocities of up to 12 m/s, stationary ones up to 20 m/s. V-rings are frequently used as preseals in order to keep dirt away from a radial shaft seal.

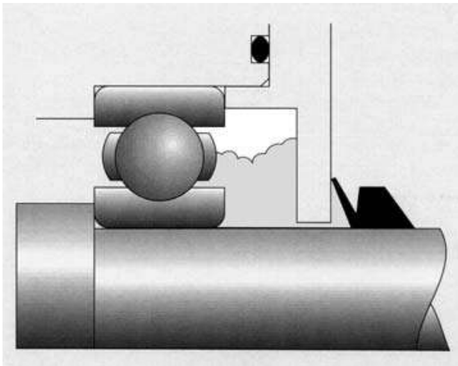

Radial Shaft Seal

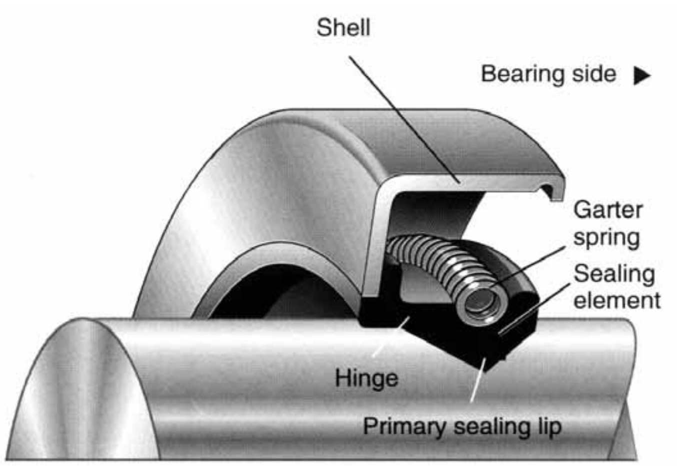

Other names are “radial lip shaft seal” or “lip ring” an “oil seal”. Radial shaft seals are, above all, used at oil lubrication. The sealing ring, equipped with a lip, is forced against the sliding surface of the shaft by a spring. If the chief aim is to prevent the escape of lubricant, the lip is on the inside. A sealing ring with an additional protection lip also prevents the dirt penetration. They are designed to withstand high sliding-contact speeds and in special cases high oil pressures as well. They have a powerful sealing action and a long operating life. In addition, they are standardized, cheap and easy to assemble. The cup section is made from a resilient plastic which is resistant to oil and ageing, for example “Perbunan” or silicone rubber. The sealing lips of the cup section are pressed lightly and uniformly against the shaft by a tubular spring. Dustproof seals have a dust lip in addition to the sealing lip.

Because of the importance of radial shaft seals for the efficient sealing of bearing arrangements, we will focus in this handout more on radial shaft seals and their application as well as on their designs and executions.

4.3 Radial Shaft Seal (“radial lip shaft seal”, “lip ring”, “oil seal”)

4.3.1 Types of Radial Shaft Seal

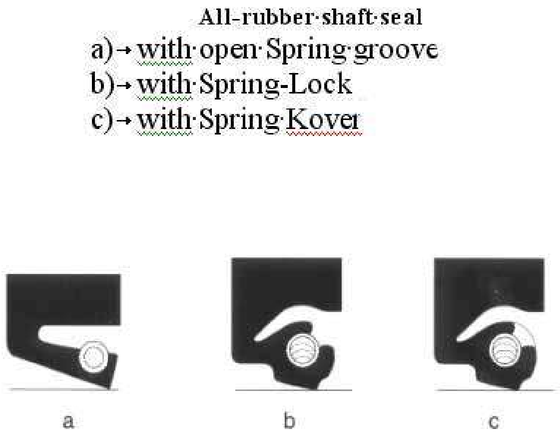

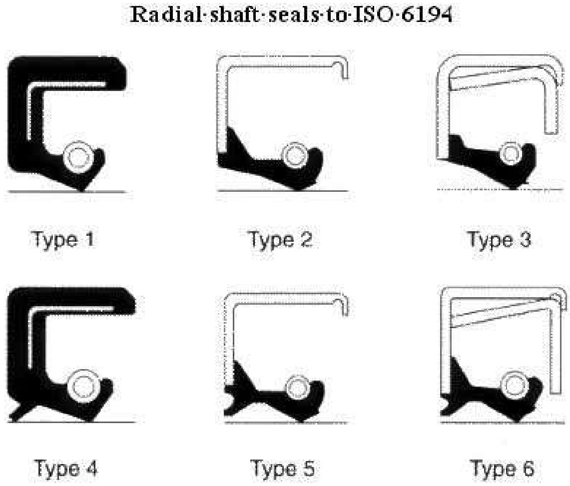

4.3.2 Materials of Radial Shaft Seal

The performance and reliability of a radial shaft seal are largely dependent on the material from which the seating lip is made. If seals fail regularly after a short period of operation, it may be advisable to replace them with seals of another material, e.g. one which is more wear-resistant or medium resistant. But consider that for example using all the time the “best” ring available will raise also your maintenance cost. For example the “best” radial shaft seal on the market has a temperature range from –75 degree Celsius up to 260 degree Celsius and is very resistant against abrasion.

The following questions should be considered:
Is the Radial Shaft Seal resistant against?

- The mediums they are contacted with? (Water, oil, grease, salts, alcohols, acids, alkalis, fuels etc.)
- The operating temperature they are contacted with? (Some can stand temperature from –70 to 260 degree C)
- The wear they are affected with? (Abrasive material such as sand, grit etc.)
- The pressure they are affected with?
- The speed they are affected with?
- The eccentricity they are affected with?

For normal applications with contact with mineral oils and greases a **Nitrile** seal will do a good job. The recommended continuous operation temperature is from –54 to 107 degree C.

Polyacrylate elastomer seals are recommended continuous operation temperature is from –40 to 150 degree Celsius. They are well suited for extreme pressure lubricants. They should not be used together wit water.

Fluorelastomer seals operate over the widest range of temperature and chemicals. They handle temperatures from –40 to 204 degree Celsius. They resist most of the lubricants, which will destroy nitrile, polyacrylates or silicones.

PTFE are suitable for high temperatures from –73 to 340 degree C.

4.3.3 Shaft and Housing Tolerances

Shaft Tolerances:

Shaft ∅ in mm	Max ∅ in mm	Min ∅ in mm	Shaft ∅ in mm	Max ∅ in mm	Min ∅ in mm
over 6 to 10	+0.000	-0.090	over 120 to 180	+0.000	-0.250
over 10 to 18	+0.000	-0.110	over 180 to 250	+0.000	-0.290
over 18 to 30	+0.000	-0.130	over 250 to 315	+0.000	-0.320
over 30 to 50	+0.000	-0.160	over 315 to 400	+0.000	-0.360
over 50 to 80	+0.000	-0.190	over 400 to 500	+0.000	-0.400
over 80 to 120	+0.000	-0.220			

The surface finish should be smooth enough to maintain contact with the seal lip, and yet rough enough to have lubricant –holding pockets. The surface should have no machine lead.

House Tolerances:

The seal is usually press-fitted into the bore. Therefore the outside diameter must be larger than the bore diameter. It is normally machined with **ISO H8 Tolerance.**

House ∅ in mm	Max ∅ in mm	Min ∅ in mm	House ∅ in mm	Max ∅ in mm	Min ∅ in mm
over 6 to 10	+0.022	-0.000	over 120 to 180	+0.063	-0.000
over 10 to 18	+0.027	-0.000	over 180 to 250	+0.072	-0.000
over 18 to 30	+0.033	-0.000	over 250 to 315	+0.081	-0.000
over 30 to 50	+0.039	-0.000	over 315 to 400	+0.089	-0.000
over 50 to 80	+0.046	-0.000	over 400 to 500	+0.097	-0.000
over 80 to 120	+0.054	-0.000			

4.3.4 Installation of Radial Shaft Seal

Guidelines for proper installation:

- Check the dimensions of the selected seal. They should match those of shaft and bore.
- Check the new seal for any damage (dents, scores or cuts). **Never** use damaged seals. Carefully clean the seal if it has become dirty.
- Chamfer the housing bore corner to prevent damage to the outside surface of the seal.
- Check to see that the counterface on the shaft is undamaged (no bruises, scratches, cracks, rust or raised areas).
- All shaft edges over which the seal has to be passed must be chamfered or rounded.
- Lightly grease or oil the seal before installation.
- After installation, check to see that other machine components or shaft shoulders do not rub against the seal.
- Use proper mounting tools. If no suitable tools are available, a wooden block and hammer can be used. To avoid shearing of the seal, the blows should be applied centrally.

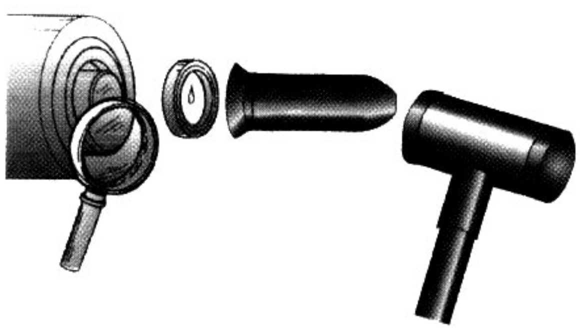

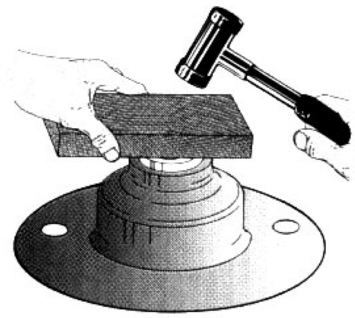

Repair of worn out seat of radial shaft seal using an adapter sleeve. For further information ask your supervisor or the bearing distributor. (Speedy-Sleeve)

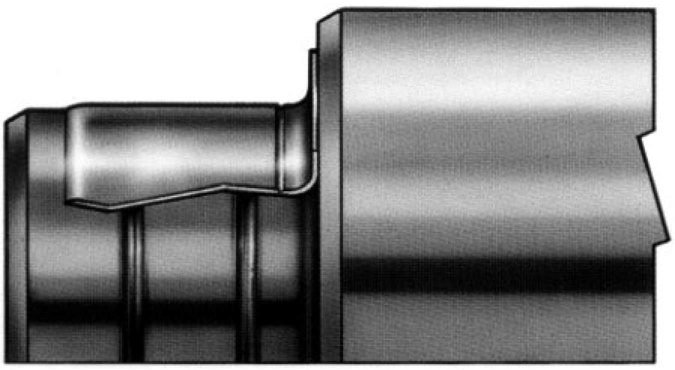

5. REPAIR JOB

5.1 Exercises in:

- Interpreting technical drawings
- Determining different rolling bearings
- Locating sealings
- Analysing the positioning of rolling bearings (floating, locating and adjusted arrangements)
- Determining the type of lubrication of assembly
- Describing the sequence of assembling

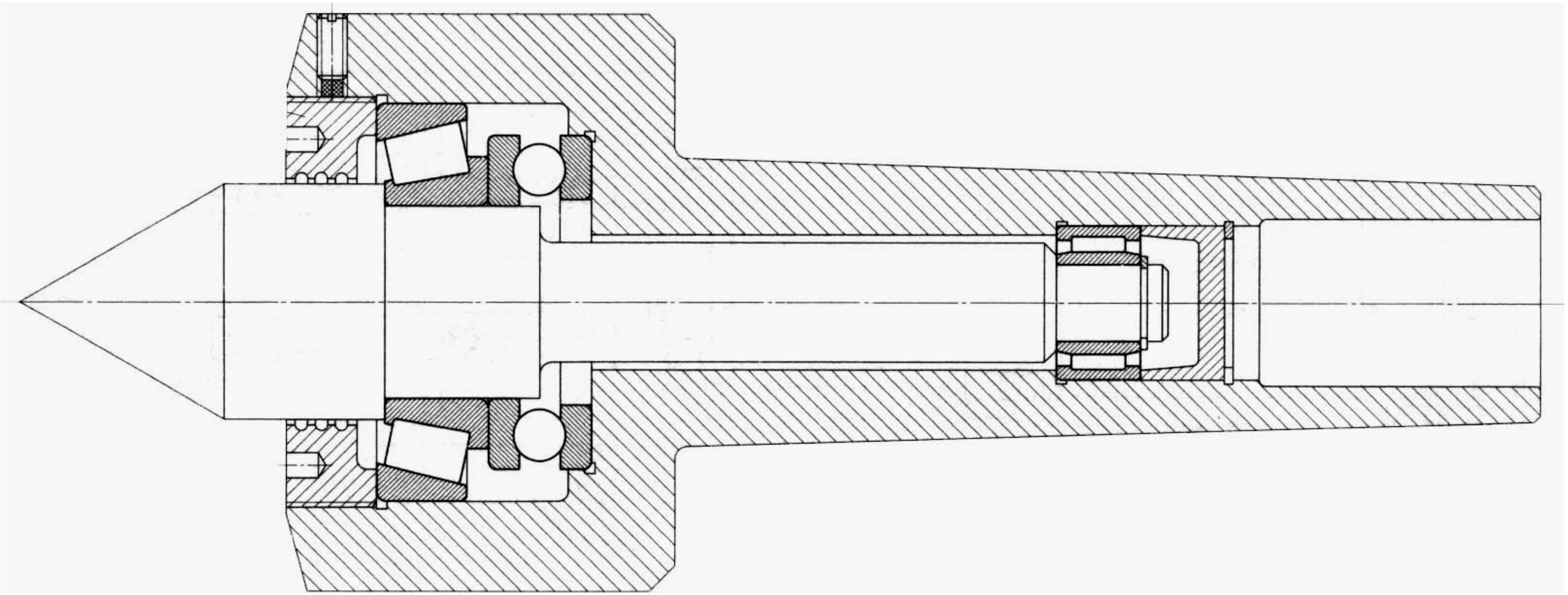

Working Sheet No. 1 – Live Center

1. Write down the different types of bearings.	
2. What seals are used to keep the dirt out of the bearing housing?	
3. Which is the floating side and which is the adjusted side?	
4. Discuss with the other trainees how the bearings are fixed.	Left side: Right side:

5. Discuss with the other trainees how to assemble the live center.

Exercise No. 2 – Water Pump

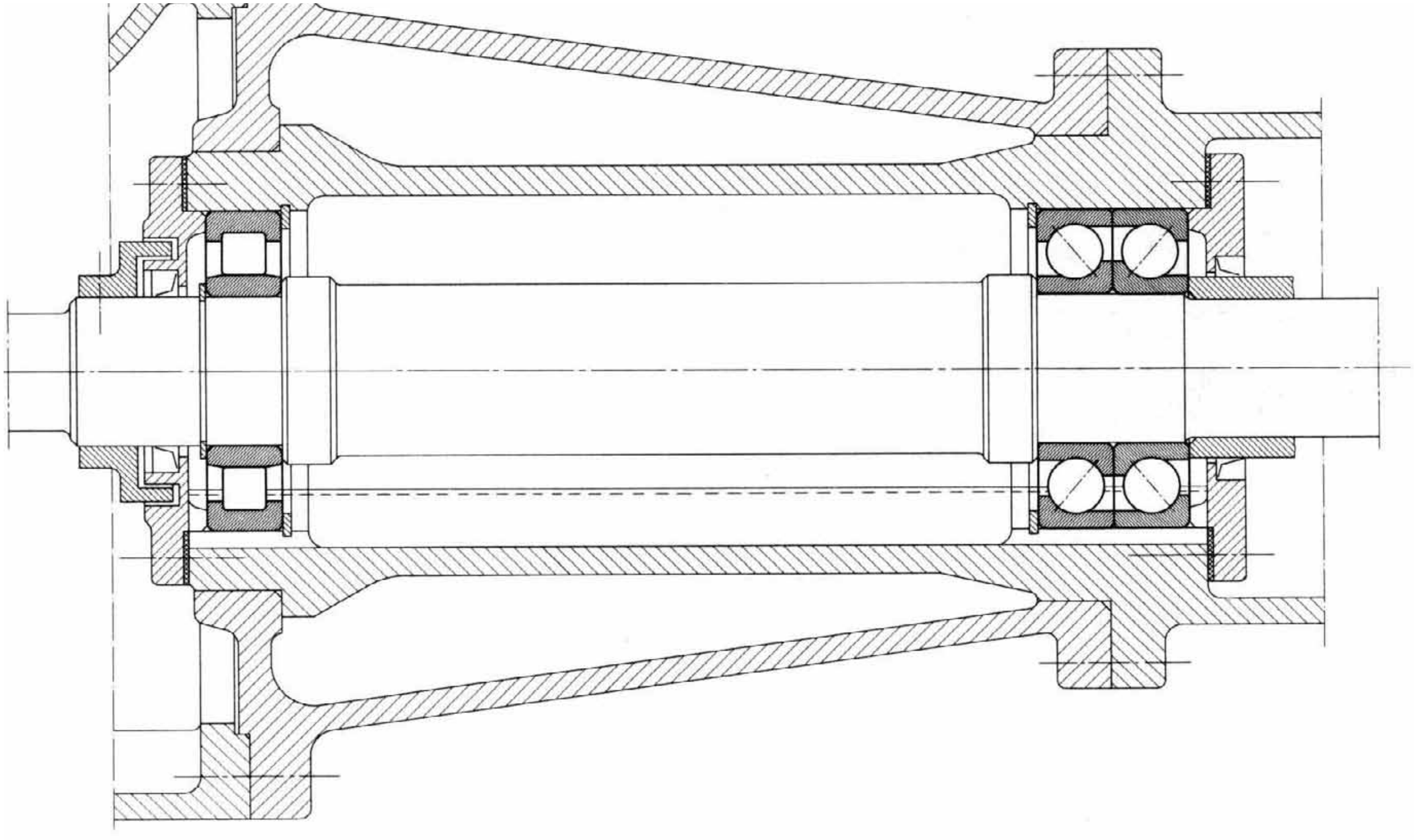

Working Sheet No. 2 – Water Pump

1. Write down the different types of bearings and the type of arrangement of the left side assembly.	
2. What seals are used to keep the dirt out of the bearing housing?	
3. How are the bearings lubricated?	
4. Which is the floating side and which is the adjusted side?	
5. Discuss with the other trainees how the bearings are fixed.	Left side: Right side:

6. Discuss with the other trainees how to assemble the water pump.

Exercise No. 3 – Converter

1. Write down the different types of bearings and the type of arrangement of the lower side assembly.	
2. What seals are used to keep the dirt out of the bearing housing?	
3. How are the bearings lubricated?	
4. Which is the floating side and which is the adjusted side?	
5. Discuss with the other trainees how the bearings are fixed.	

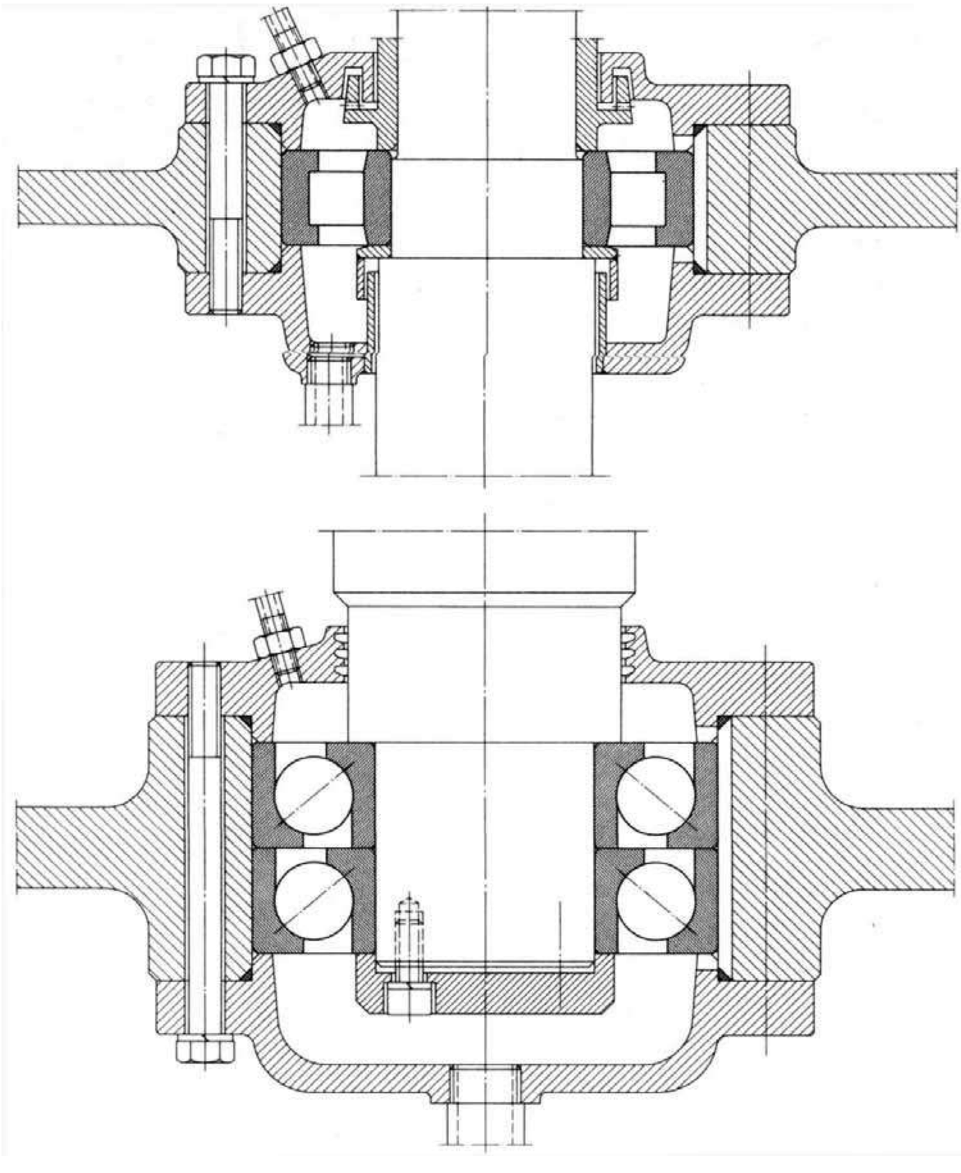

Interpreting Technical Drawing – Self Study

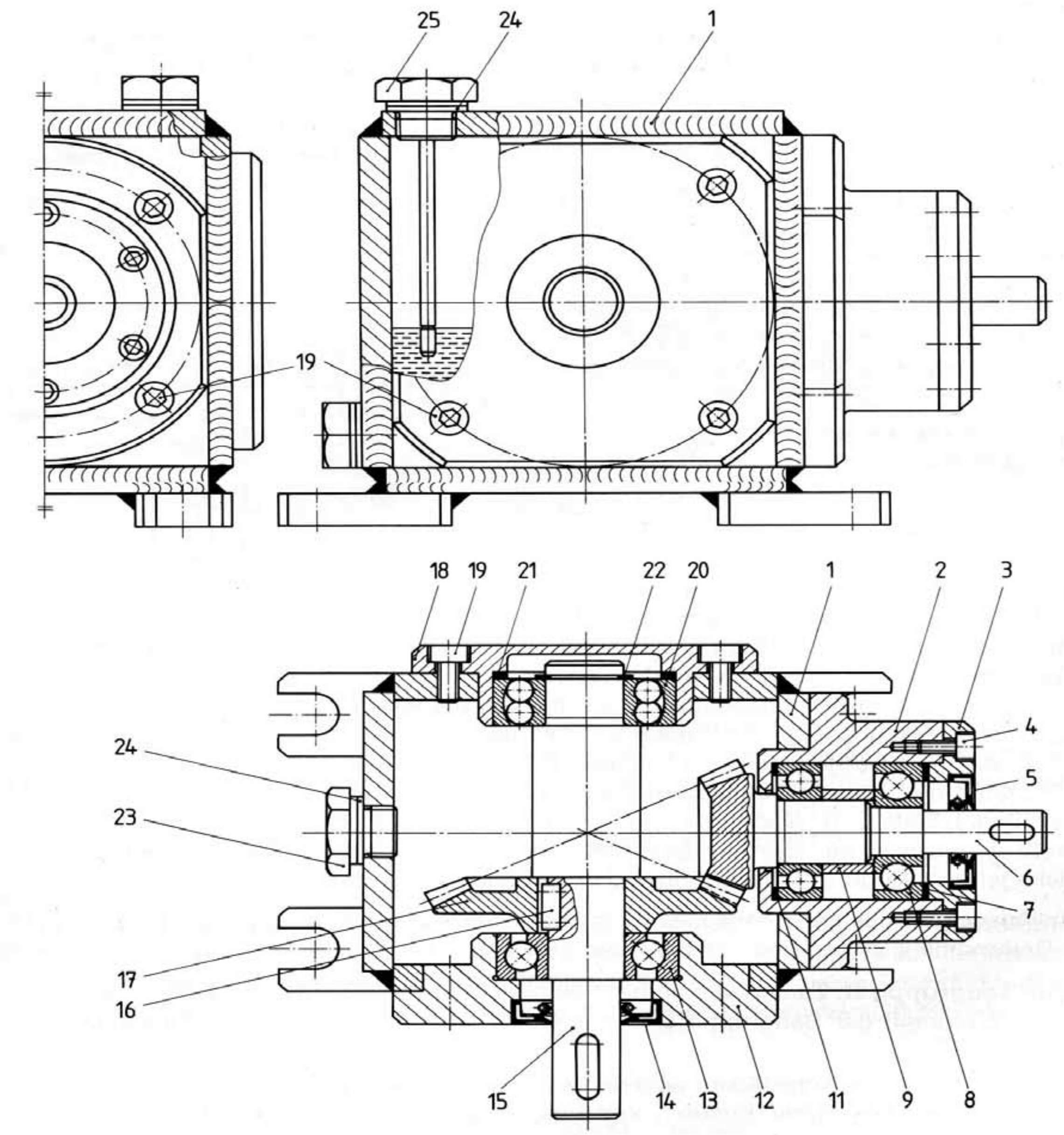

List of parts: Bevel Gear Drive								
Pos	Pcs	Designation	Pos	Pcs	Designation	Pcs	Pce	Designation
1	1	Gearbox case	10	1	Deep groove ball bearing	19	12	Socket head screw
2	1	Bearing housing	11	1	Shim ring	20	1	Self-aligning ball bearing
3	1	Bearing crown	12	1	Bearing housing	21	1	Elastic distance ring
4	6	Socket head screw	13	1	Contact ball bearing	22	1	Snap ring
5	1	Lip seal	14	1	Lip seal	23	1	Closing cap
6	1	Mitre pinion wheel	15	1	Gear shaft	24	2	Copper ring
7	1	Shim ring	16	1	Feather key	25	1	Screw plug with oil dip stick
8	1	Angular ball bearing	17	1	Mitre wheel			
9	1	Spacer ring	18	1	Bearing **housing**			

5.2 General Instructions for a Repair Job within the Workshop

Working Steps	Comments
1. Prepare Workplace for disassembling	• Remove parts, tools and jigs from previous jobs from the working area • Clean up the working area • Provide container for used oil • Provide new cleaning rags to clean up spilled oil and grease
2. Safety Check	Ask yourself the following questions: • Do I have the permission to do the job? • Am I skilled/trained to do the job? • Are there any hazards for me, for my colleagues or for the environment? E.g. Machine under pressure, machine under vacuum, machine filled with a hazardous medium, hazard because of electric shock …..
3. Sketch the outside Machine Contours	• To make sure that the machine can be re-assembled properly even after a longer period (e.g. Break because of lack of spare parts) • Consider that a colleague of you might re-assemble the machine. • Store the draft together with the machine parts
4. Remove Oil	• Before opening any part of the machine, remove oil • Catch the oil in an adequate container and store it for disposal • Do not spill oil
5. Mark all Parts before starting to disassemble	• To make sure that the machine can be re-assembled properly even after a longer period (e.g. Break because of lack of spare parts). Consider that a colleague of you might re-assemble the machine. • Use letter or number punch to mark parts • It is also possible to mark parts using a center punch, a small chisel or water and kerosene resistant paint
6. Draft a plan in your mind on how to dissemble the machine	• Use all available resources like manuals, drawings ….. • Think first before starting to screw!
7. Dissemble the Machine	• Use the proper tools • Don't use any force and take care not to damage any part • Remove first couplings, pulleys, sprockets from the shafts • Open the housing • Remove shafts, bearings, sealing • Store all parts properly in a box with a soft surface. For sensitive parts put some cleaning rag around
8. Sketch the inner Assembly	• If necessary sketch the inner assembly. Consider that a colleague of you might re-assemble the machine. • Especially take note of spacer rings. Sketch the position of them.
9. Clean all Parts	• Clean all parts using kerosene; Use scraper to remove old seal • During cleaning look already for damages
10. Determine the Damages	• Try to find the causes for the overhauling • Transfer all your findings to the maintenance history log

Working Steps	Comments
11. Distribute Work and Actual Repair	• Measure seats from all bearings and seals • Order spare parts and give parts to the machine shop • Weld broken parts, remove all dents from sealing surfaces, gears and other important parts • Dynamic balancing of parts
12. Break	• Break because of lack of spare parts and machine shop work • Store all parts properly (for longer storage, put some grease on critical parts and cover the whole machine with plastic foil)
13. Prepare Workplace for re-assembling	• Remove parts, tools and jigs from previous jobs from the working area • Clean up the working area
14. Re-assembling	• Before re-assembling make a plan in your mind on how to mount all parts. • Polish all seats of bearings and sealing • Do not use any unnecessary force! • Use the proper tools and methods for the installation of bearings and sealing • Do not over-grease bearings; Apply also grease to lip-rings and O-rings • To adjust bearing clearance, backlash and axial play of shafts use the proper measuring method and exactly fitting spacer rings • Use new flat seals or sealant • Use new bolts and nuts for re-assembling
15. Oil Filling	• Check the Machine-File or in the Owner-Manual to determine the proper type of oil • Do not overfill the reservoir; Do not spill oil; Check the sealing surfaces against oil leaking
16. Test Run	• Before installation the machine a test run should show the proper repair of the machine. In case of a problem it is easier to solve it with in the workshop.

5.3 Shortcuts on sketching Machine Parts during dissembling

Part	Shortcut	Detailed	Part	Shortcut	Detailed
Radial Shaft Seal with on lip (lip on the left side)	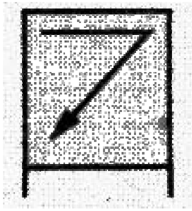	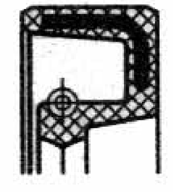	V-Ring (lip on left side)	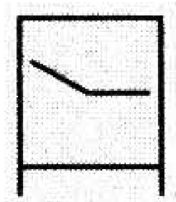	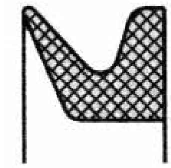
Radial Shaft Seal with one lip and one dust lip (lip on the left side, dust lip on the right side)	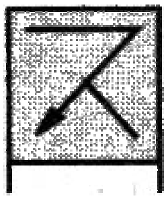	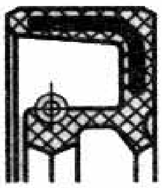	Labyrinth-ring	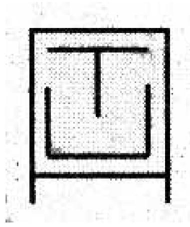	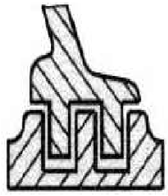
Radial Shaft Seal with two lips	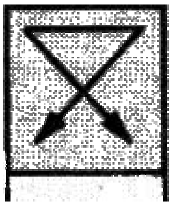	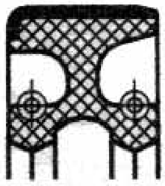	Packing	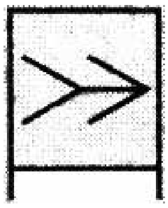	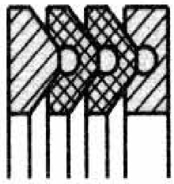

Examples

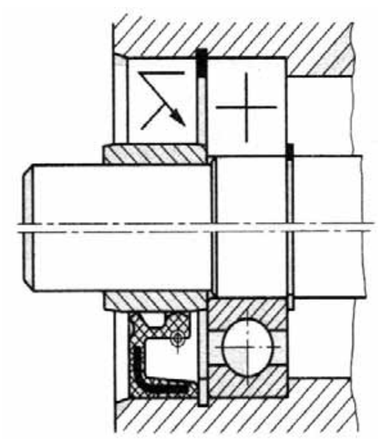

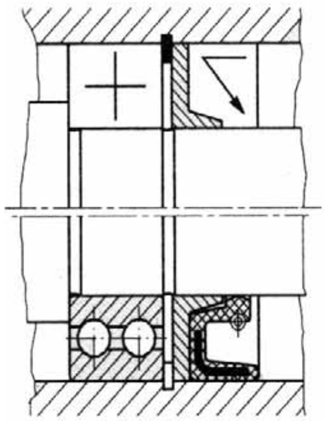

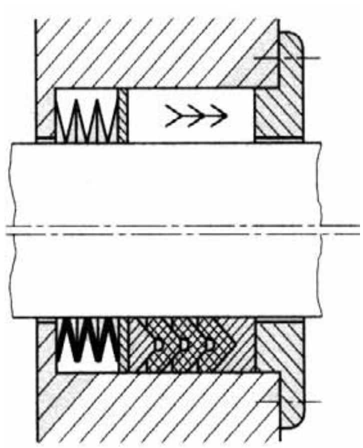

HANDS-ON EXERCISE FOR DISAMBLING A WORM GEAR DRIVE
Sketching Machine Parts and Contours

Disassembling - Sketch of Machine Contour

Disassembling - Sketch of Worm shaft including seals, bearing and spacer ring

Disassembling - Sketch of Gear shaft including seals, bearing and spacer ring

6. SAFETY

Safety equipment during repair activities

- Safety glasses
- Steel toed shoes
- Hard hat when using a overhead crane or other lifting devices
- Leather gloves when doing rough work
- Rubber gloves when cleaning machine parts or handling parts which are contaminated with product
- Plastic apron and gumboots when using steam cleaner
- Face shield when doing grinding work or cleaning machine parts with steam cleaner
- Heat protecting gloves when carrying hot parts

Safety rules during repair activities

- When you enter a production area log in. When you leave the place log out.
- Inform other colleagues when you start with activities they should know.
- Make sure that a machine you start to work on is electrically disabled.
- Be careful when opening any machine, which works under pressure or vacuum, like pumps, fans, compressor, hydraulic equipment or others. They can be still under working pressure and harm you.
- Be careful when opening any machine/parts, which can possibly contain products, like pipes, tanks, boilers, pumps and others. These products can harm your eyes, your body or even your breathing.
- When handling heavy parts/tools use always a lifting device or ask your colleagues for help. You can seriously damage your back.
- When handling oil or grease, try to avoid spill or if spilled then remove it immediately.
- When working with oxy-acetylene burner, take care of fumes from old oil, grease or parts of products. Keep your head out of the fume or wear a suitable mask.
- Do not light a fire near petroleum or other inflammables.
- When opening bolts use the correct size of tools. Besides damaging the bolts you might slip off and damage your hands.
- When storing shafts or other round shaped parts prevent them from rolling of the working table using for example wood.

MAINTENANCE & REPAIR MODULE 2 – FINAL KNOWLEDGE TEST

1. Name 3 different types of bolts (3 points)

______________________________ ______________________________

____

2. What is the advantage of a stud bolt? (1 point)

- ☐ a. They are cheaper because they do not have a head.
- ☐ b. They are stronger than hexagon bolts.
- ☐ c. They will protect the housing thread if the joint is opened frequently.
- ☐ d. They will not rust so easy.

3. When do we use Body-Fit bolts? (1 point)

- ☐ a. When space is limited.
- ☐ b. If there is no hexagon bolt, we can use them instead.
- ☐ c. To prevent movement between the workpieces.
- ☐ d. No need for Body-Fit bolts at all.

4. Describe the procedure on how to repair a thread using “Heli-Coil”. (1 point)

____

____

5. What is the minimum screw-in length for bolts? (1 point)

- ☐ a. 1 times the diameter of bolt
- ☐ b. 0.8 times the diameter of bolt
- ☐ c. 1.2 times the diameter of bolt
- ☐ d. 1.5 times the diameter of bolt

6. Name 4 different types of nuts. (4 point)

______________________________ ______________________________

______________________________ ______________________________

7. Name 4 different methods to prevent bolt and nut connections from loosening. (4 points)

______________________________ ______________________________

______________________________ ______________________________

8. Name the four main parts of rolling bearings. (4 points)

______________________________ ______________________________

______________________________ ______________________________

9. Name the 8 bearings below. (8 points)

1. ______________________ 5. ______________________
2. ______________________ 6. ______________________
3. ______________________ 7. ______________________
4. ______________________ 8. ______________________

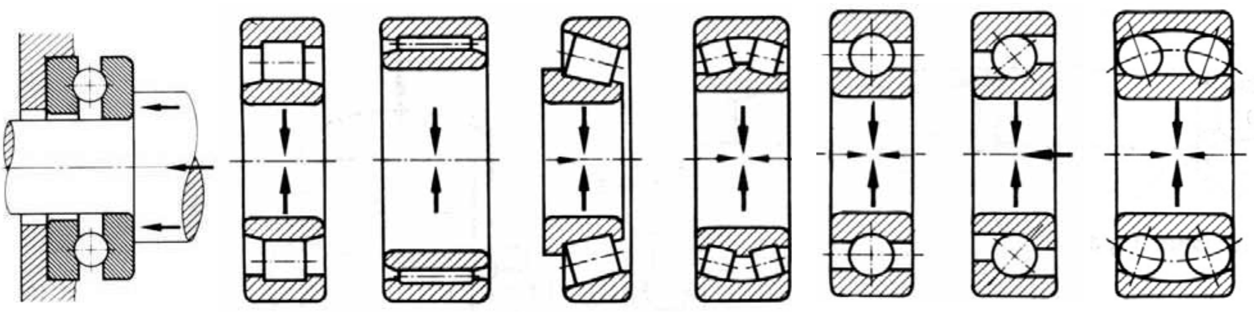

1 2 3 4 5 6 7 8

10. What are the 3 common types of loads for rolling bearings? (3 points)

______________________ ______________________

____

11. Which of the following statements about storing bearings is true? (1 point)

☐ a. No need to store bearings. The supplier will deliver them in time.
☐ b. Bearings should be stored in a warm place in vertical position.
☐ c. Bearings should be stored beside the machine.
☐ d. Bearings should be stored in a dry place in horizontal position.

12. Name the 3 possible bearing arrangements. (3 point)

______________________ ______________________

____

13. Which of the following statements about mounting tapered bearings is true? (1 point)

☐ a. The radial clearance can be measured with a feeler gauge.
☐ b. The radial clearance can be measured with a steel rule.
☐ c. The radial clearance can be measured with a micrometer gauge.
☐ d. The radial clearance can be measured with a micrometer height gauge.

14. Name 2 bearings suitable for radial loads and 2 bearings good for axial loads. (4 points)

Radial Loads	**Axial Loads**

15. Name the 3 bearings arrangements below. (3 point)

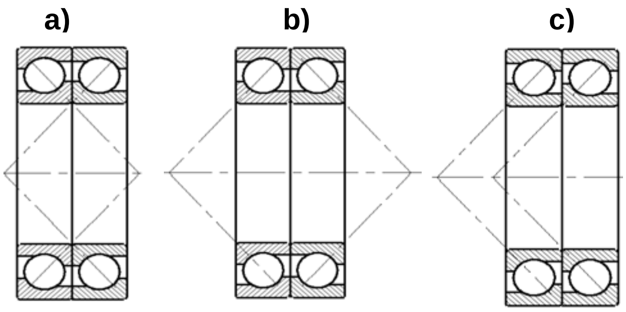

a) …………………..…………..

b) …………………..………..

c) …………………..………..

16. Name the 3 bearing mounting methods. (3 point)

______________________________ ______________________________

____

17. Which statement is true? (1 point)

- ☐ a. Radial shaft seals are static seals.
- ☐ b. Felt rings are non-rubbing seals.
- ☐ c. O-rings are non-rubbing seals.
- ☐ d. Face seals and sealing compounds are static seals.

18. What is <u>not</u> important for the radial shaft seal selection? (1 point)

- ☐ a. The size of the bearing.
- ☐ b. The medium that will come in contact with the seal.
- ☐ c. The max. temperature that will occur during operation.
- ☐ d. The max. working pressure

19. Which of the following statements about V-rings is true? (1 point)

- ☐ a. V-rings will hold the grease inside the housing
- ☐ b. V-rings will keep oil inside the housing
- ☐ c. V-rings work with a spring ring
- ☐ d. V-rings will keep dirt outside the housing

Maximum No of points:	**48**	**=**	**100**	**%**
Reached Points:	**……….**	**=**	**………%**	

List of Needed Ressources for "Maintenance & Repair Module 2" Course

					Need to Order/Replace/Organize			
Resource	**Checked**	**Unit**	**Qty for 1 Trainee**	**Qty for 4 Trainees**	**Unit**	**Qty**	**Unit Price**	**Amount**
Teaching Aids								
Handouts								
Overhead foil								
Video tapes (Gearing & Bearing)								
Overhead projectir								
White board & marker								
TV-VHS								
Forms								
Bio-data								
Participant reaction form								
Participant evaluation sheet								
Course evaluation								
Certificates								
Billing statement								
Consumables and Parts for Exercises								
Cotton rag								
Oil seal 8mmx30mmx45mm								
Roller bearing # 30204J								
Wheel bearing grease								
Extra 20W/30 multi grade (Oil)								
Fiber flex gasket								
Sand paper # 220 water proof								
Brass shim gauge .010								
Brass shim gauge .005								
Black silicon gasket # 80046								

					Need to Order/Replace/Organize			
Resource	**Checked**	**Unit**	**Qty for 1 Trainee**	**Qty for 4 Trainees**	**Unit**	**Qty**	**Unit Price**	**Amount**

Additional Information to Maintenance

Regular Threads - Tables

Metric	Pitch mm	Drill ¬ mm	Wrench Size
M 3	0.50	2.5	5.5
M 4	0.70	3.3	7
M 5	0.80	4.2	8
M 6	1.00	5.0	10
M 8	1.25	6.8	13
M 10	1.50	8.5	16 (17)
M 12	1.75	10.2	18 (19)
M 16	2.00	14.0	24
M 20	2.50	17.5	30
M 24	3.00	21.0	36
M 30	3.50	26.5	46
M 36	4.00	32.0	55
M 42	4.50	37.5	65
M 48	5.00	43.0	75
M 56	5.50	50.5	85
M 64	6.00	58.0	95

UNC	TPI	Drill ¬ mm
1/4 “	20	5.1
5/16”	18	6.6
3/8”	16	8.0
7/16”	14	9.4
1/2"	13	10.8
9/16”	12	12.2
5/8”	11	13.5
3/4"	10	16.5
7/8”	9	19.5
1”	8	22.25

UNF	TPI	Drill ¬ mm
1/4 “	28	5.5
5/16”	24	6.9
3/8”	24	8.5
7/16”	20	9.9
1/2"	20	11.5
9/16”	18	12.9
5/8”	18	14.5
3/4"	16	17.5
7/8”	14	20.4
1”	12	23.25

Torque Wrench

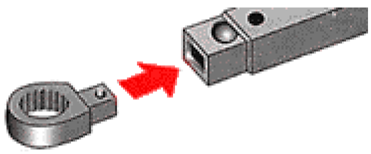

Mechanical Properties of Metric Compared to SAE Fasteners

	Class										
ISO Grade	**4.6**	**4.8**	**5.6**	**5.8**	**6.6**	**6.8**	**6.9**	**8.8**	**10.9**	**12.9**	**14.9**
SAE Grade	1	2	2	2	3	3	3	5	8	n/a	n/a
Brinell*(HRB)*	110-170		140-215		170-245			225-300	280-365	330-425	390 min.
Rockwell*(HRC)*	n/a		n/a		n/a			18-31	27-38	34-44	40-49
Yield*(psi)*	45,000		56,000		76,000		76,000	91,000	128,000	153,000	180,000
Tensile*(kpsi)*	56-78		70-100		85-113		85-99	113-128	142-170	170-200	200-230

		Prop Class 4.6		Prop Class 5.8		Prop Class 8.8	
Diam	**Pitch**	**Bolt Tension kN**	**torque Nm**	**Bolt Tension kN**	**Torque Nm**	**Bolt Tension kN**	**Torque Nm**
M1.6	0.35	0.19	0.06	0.31	0.10	0.48	0.15
M2	0.40	0.31	0.12	0.51	0.20	0.78	0.31
M2.5	0.40	0.31	0.12	0.51	0.20	0.78	0.31
M3	0.50	0.73	0.44	1.24	0.74	1.90	1.10
M4	0.70	1.29	1.00	2.17	1.70	3.32	2.70
M5	0.80	2.08	2.10	3.51	3.50	5.35	5.00
M6	1.00	2.94	3.50	4.97	5.90	7.54	9.00
M8	1.25	5.36	8.50	9.04	14.0	13.8	22.0
M10	1.50	8.45	17.0	14.3	29.0	21.9	44.0
M12	1.75	12.4	30.0	20.8	49.0	31.8	77.0
M14	2.00	16.8	47.0	28.4	79.0	43.4	122.0
M16	2.00	22.9	73.0	38.8	124.0	59.2	190.0
M18	2.50	28.1	101.0	47.5	171.0	74.8	269.0
M20	2.50	35.8	143.0	60.5	242.0	95.6	372.0
M22	2.50	44.3	195.0	74.8	329.0	118.0	519.0
M24	3.00	51.6	248.0	87.1	418.0	138.0	640.0
M27	3.00	66.9	361.0	113.0	610.0	179.0	967.0
M30	3.50	81.9	491.0	138.0	828.0	219.0	1314.0

		Prop Class 10.9		Prop Class 12.9	
Diam	**Pitch**	**Bolt Tension kN**	**torque Nm**	**Bolt Tension kN**	**Torque Nm**
M1.6	0.35	0.68	0.22		
M2	0.40	1.12	0.45		
M2.5	0.45	1.83	0.92		
M3	0.50	2.72	1.60	3.17	1.90
M4	0.70	4.74	3.80	5.54	4.40
M5	0.80	7.67	8.00	8.97	8.90
M6	1.00	10.9	13.0	12.7	15.0
M8	1.25	19.8	32.0	23.1	37.0
M10	1.50	31.3	63.0	36.6	73.0
M12	1.75	45.5	109.0	53.2	128.0
M14	2.00	62.1	174.0	72.8	203.0
M16	2.00	84.5	270.0	98.8	316.0
M18	2.50	103.0	371.0	121.0	436.0
M20	2.50	132.0	528.0	155.0	620.0
M22	2.50	164.0	722.0	191.0	840.0
M24	3.00	190.0	914.0	222.0	1066.0
M27	3.00	248.0	1339.0	289.0	1561.0
M30	3.50	303.0	1817.0	354.0	2124.0

Conversions			
Kg.cm	0.0981 Nm		
Kg.m	9.81 Nm		
lb.in	0.083 lb.ft	0.113 Nm	
lb.ft	12.0 lb.in	1.356 Nm	
Nm	8.851 lb.in	0.738 lb.ft	
kpm	7.23 lb.ft	86.8 lb.in	9.807 Nm

Dissembling a Machine – Make use of all available Information

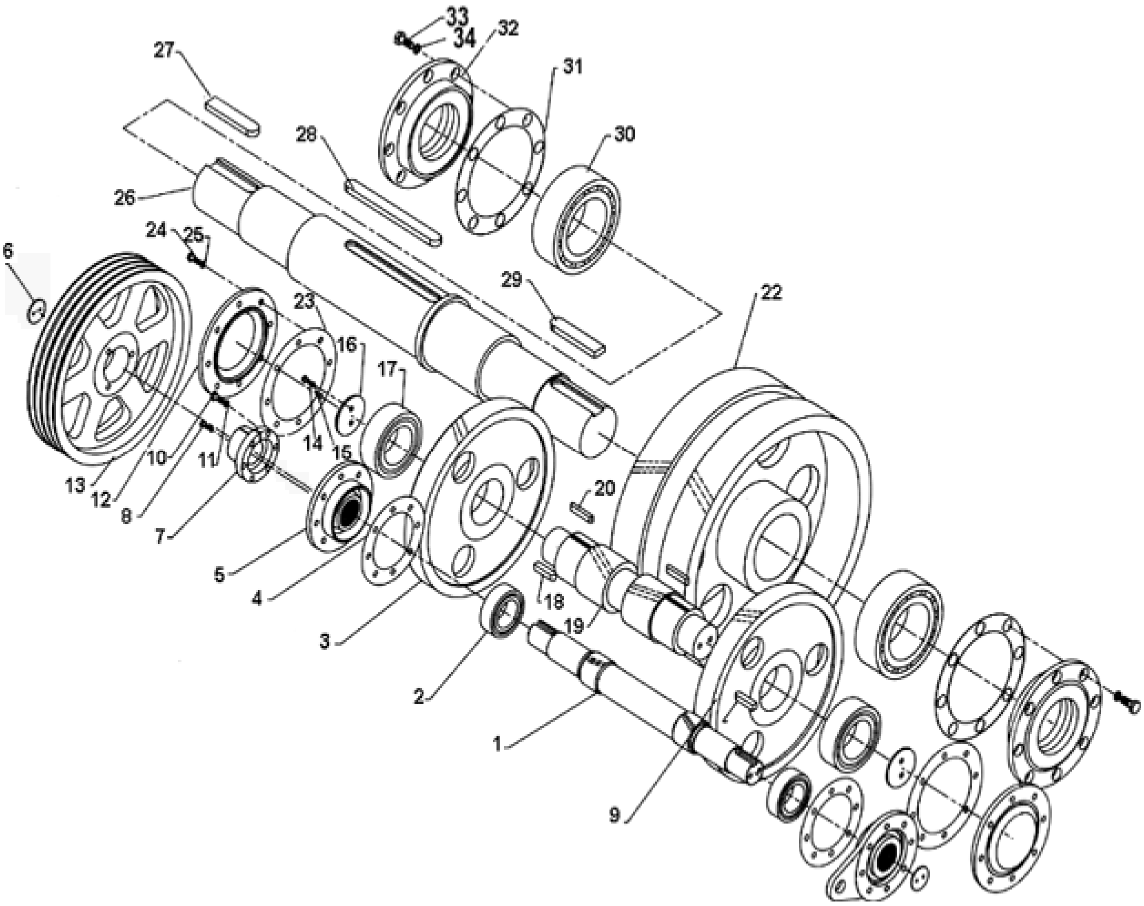

International Gear Reducer Assembly							
No.	**Description**	**No.**	**Description**	**No.**	**Description**	**No.**	**Description**
1.	High speed pinion	10.	Bots, hub to drive sheave	19.	Low speed pinion	28.	Key, crank shaft to slow speed
2.	High speed bearing	11.	Lock washer, hub to sheave	20.	Key, low speed pinion	29.	Key, crank shaft to crank arm
3.	High speed gear, left	12.	Intermediate bearing cover	21.	Key, high speed pinion	30.	Low speed bearing
4.	High speed pinion cover plate gasket	13.	Drive sheave	22.	Low speed gear	31.	Crank shaft cover plate gasket
5.	High speed bearing cover	14.	Bolt, Int end cap	23.	Low speed pinion cover plate gasket	32.	Crank shaft cover plate
6.	High speed pinion end cap	15.	Wire	24.	Bolt, Intermediate cover plate	33.	Bolt, crank shaft cover plate
7.	Drive sheave hub	16.	Intermediate end cap	25.	Lock washer, Intermediate cover plate	34.	Washer, crank shaft cover plate
8.	Bolt, HS end cap	17.	Intermediate bearing	26.	Crank shaft		
9.	High speed gear, right	18.	Key, high speed pinion	27.	Key, crank shaft to crank arm		

Types of Radial Shaft Rings and their Duty

Grease Retention

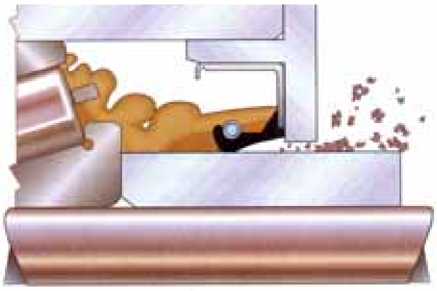

Oil Retention

Exclusion

Separation of two Liquids

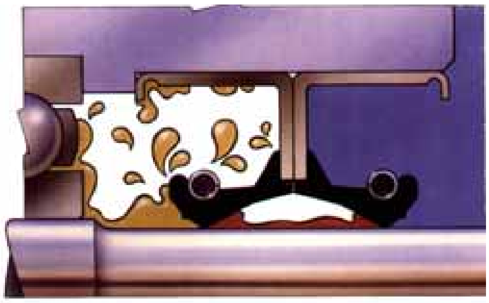

Containing High Pressure

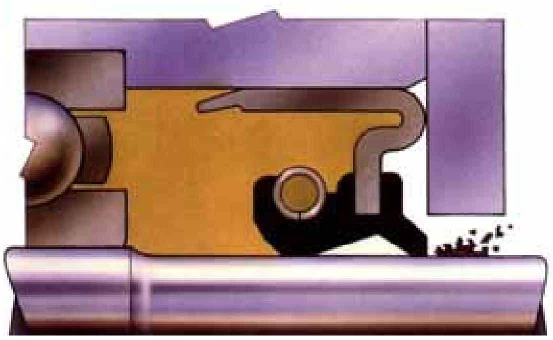

Installation Restrictions

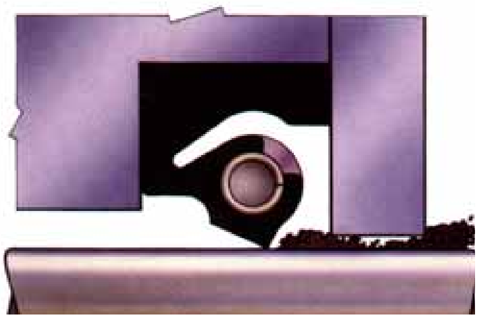

Restricted Space

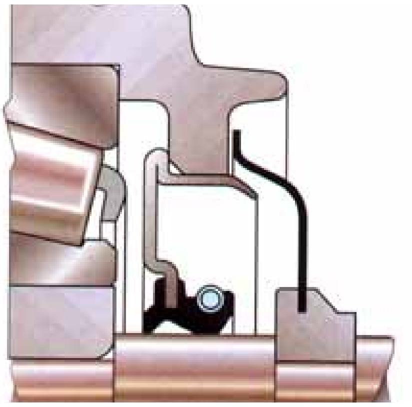

ISO TOLERANCE SYSTEM – SHAFT AND HOUSING

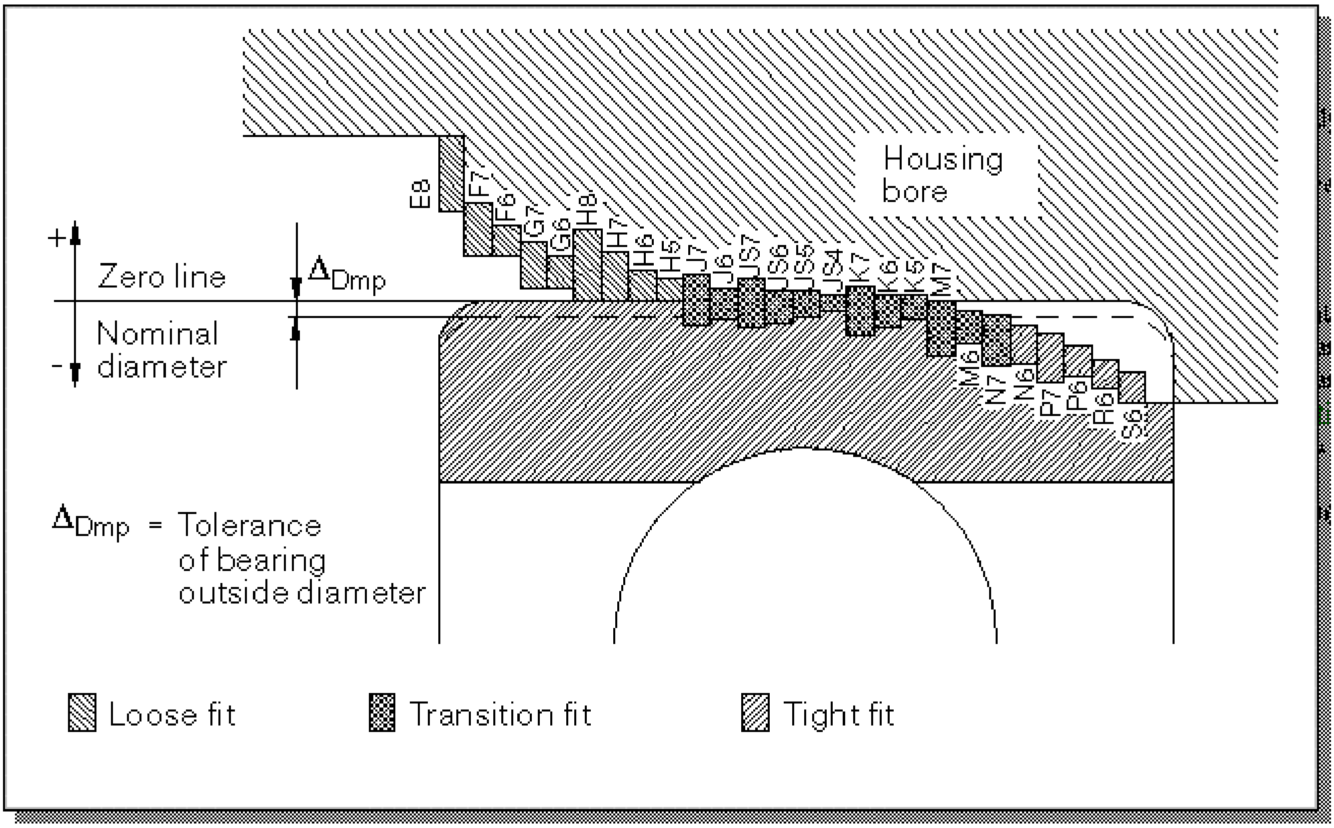

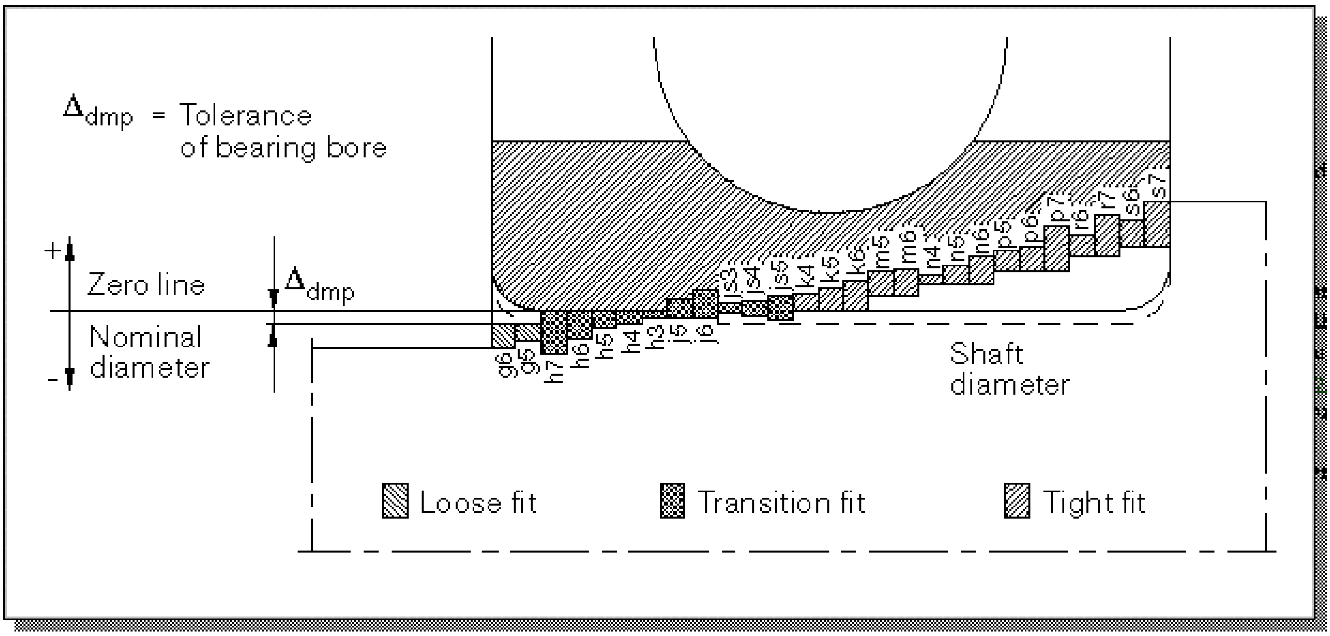

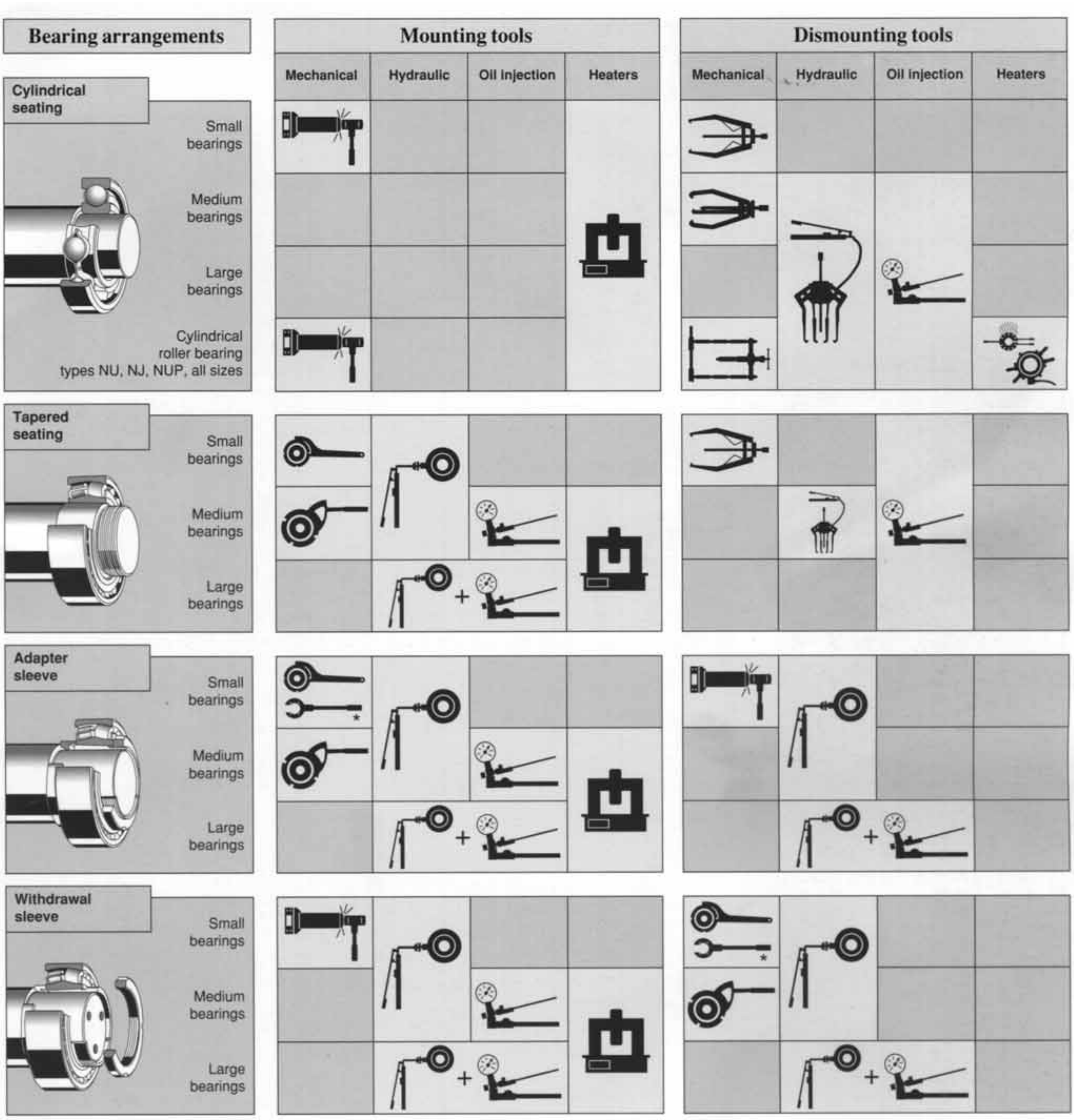

Small bearings: Bore diameter < 80 mm • Medium bearings: Bore diameter 80 - 200 mm • Large bearings: Bore diameter > 200 mm
** Only for self-aligning ball bearings.*

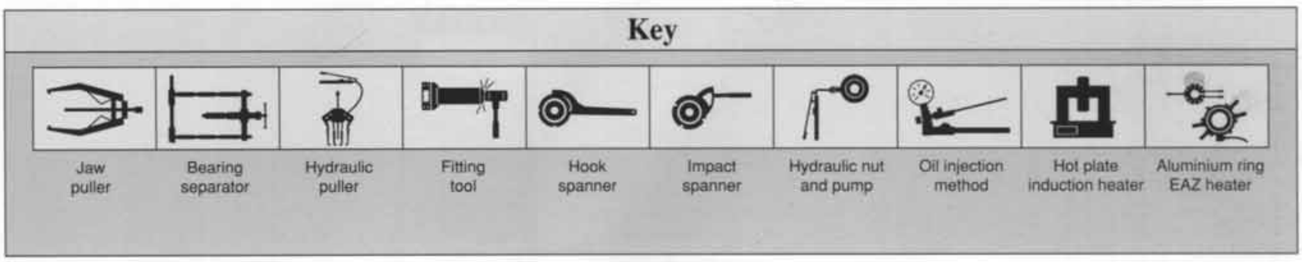

APPLICATION OF ROLLING BEARING

Deep Groove Ball Bearings	Angular Contact	Double Row
• Transmissions • Electric Motors • Generators • Electrical Appliances • Pumps & Compressors • Blowers & Fans • Speed Changers • Gear Boxes & Drives • Woodworking Machinery • Lawn & Garden • Equipment • Turbines • Farm Machinery • Construction Machinery • Oil Field Machinery • Elevators • Conveying Equipment • Hoists & Cranes • Power Hand Tools • Industrial Valves • Rolling Mill Machinery • Textile Machinery • Paper Machinery • Printing Machinery • Food Products Machinery • Packaging Machinery • Medical & Dental Equipment (extra small) • Robotics Equipment (thin) • Industrial Clutches • Slip Joints • Skate Boards • Inline Skates	• Metal Rolling Mills • Oil Field Equipment • Gear Boxes & Drives • Deep Well Pumps • Centrifugal Pumps • Electric Motors • Generators • Blowers and Fans • Gear Reducers	• Petrochemical Equipment • Centrifugal Pumps • (Conrad) • Electric Motors (Conrad) • Transmissions • Worm Drives • Blowers & Fans • Film Processing • Equipment (Self-Aligning) • Vertical Spinning • Equipment (Self-Aligning) • Vertical Weaving • Equipment (Self-Aligning) • Paper Making - • Industrial Countershafts

ROLLING BEARING – SAMPLE OF A DESIGNATION SYSTEM

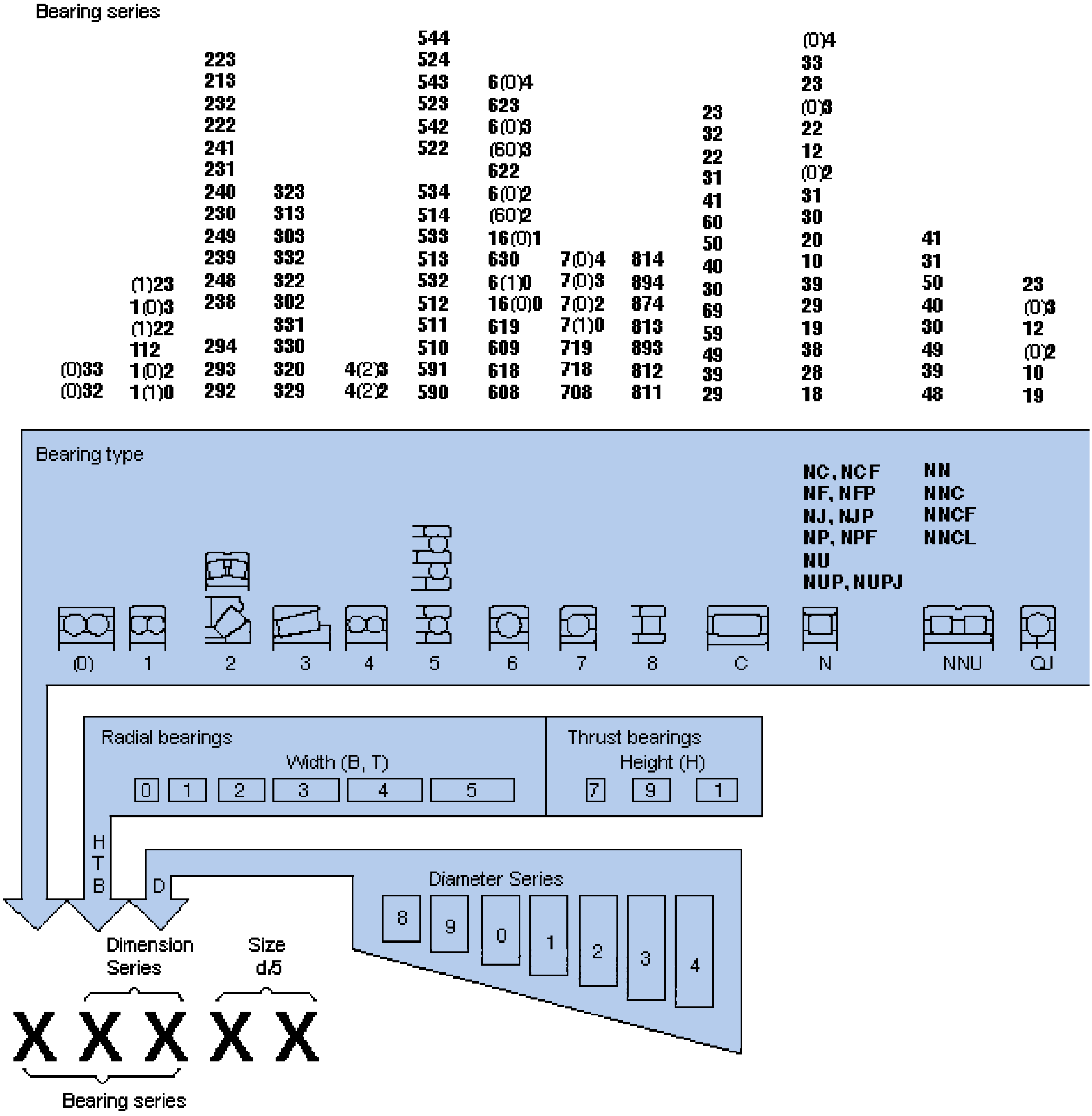

BOLT CONNECTION - TORQUE

In the Philippines there is still the American SAE Bolt Designation System common. below you can find a conversion table between SAE and ISO System.

Mechanical Properties of Metric Compared to SAE Fasteners

	Class										
ISO Grade	**4.6**	**4.8**	**5.6**	**5.8**	**6.6**	**6.8**	**6.9**	**8.8**	**10.9**	**12.9**	**14.9**
SAE Grade	1	2	2	2	3	3	3	5	8	n/a	n/a
Brinell*(HRB)*	110-170		140-215		170-245			225-300	280-365	330-425	390 min.
Rockwell*(HRC)*	n/a		n/a		n/a			18-31	27-38	34-44	40-49
Yield*(psi)*	45,000		56,000		76,000		76,000	91,000	128,000	153,000	180,000
Tensile*(kpsi)*	56-78		70-100		85-113		85-99	113-128	142-170	170-200	200-230

Below you can find a table for torque and tension for different Property Classes.

		Prop Class 4.6		Prop Class 5.8		Prop Class 8.8	
Diam	**Pitch**	**Bolt Tension kN**	**torque Nm**	**Bolt Tension kN**	**Torque Nm**	**Bolt Tension kN**	**Torque Nm**
M1.6	0.35	0.19	0.06	0.31	0.10	0.48	0.15
M2	0.40	0.31	0.12	0.51	0.20	0.78	0.31
M2.5	0.40	0.31	0.12	0.51	0.20	0.78	0.31
M3	0.50	0.73	0.44	1.24	0.74	1.90	1.10
M4	0.70	1.29	1.00	2.17	1.70	3.32	2.70
M5	0.80	2.08	2.10	3.51	3.50	5.35	5.00
M6	1.00	2.94	3.50	4.97	5.90	7.54	9.00
M8	1.25	5.36	8.50	9.04	14.0	13.8	22.0
M10	1.50	8.45	17.0	14.3	29.0	21.9	44.0
M12	1.75	12.4	30.0	20.8	49.0	31.8	77.0
M14	2.00	16.8	47.0	28.4	79.0	43.4	122.0
M16	2.00	22.9	73.0	38.8	124.0	59.2	190.0
M18	2.50	28.1	101.0	47.5	171.0	74.8	269.0
M20	2.50	35.8	143.0	60.5	242.0	95.6	372.0
M22	2.50	44.3	195.0	74.8	329.0	118.0	519.0
M24	3.00	51.6	248.0	87.1	418.0	138.0	640.0
M27	3.00	66.9	361.0	113.0	610.0	179.0	967.0
M30	3.50	81.9	491.0	138.0	828.0	219.0	1314.0
M33	3.50	101.0	667.0	172.0	1135.0	270.0	1782.0

		Prop Class 10.9		Prop Class 12.9	
Diam	**Pitch**	**Bolt Tension kN**	**torque Nm**	**Bolt Tension kN**	**Torque Nm**
M1.6	0.35	0.68	0.22		
M2	0.40	1.12	0.45		
M2.5	0.45	1.83	0.92		
M3	0.50	2.72	1.60	3.17	1.90
M4	0.70	4.74	3.80	5.54	4.40
M5	0.80	7.67	8.00	8.97	8.90
M6	1.00	10.9	13.0	12.7	15.0
M8	1.25	19.8	32.0	23.1	37.0
M10	1.50	31.3	63.0	36.6	73.0
M12	1.75	45.5	109.0	53.2	128.0
M14	2.00	62.1	174.0	72.8	203.0
M16	2.00	84.5	270.0	98.8	316.0
M18	2.50	103.0	371.0	121.0	436.0
M20	2.50	132.0	528.0	155.0	620.0
M22	2.50	164.0	722.0	191.0	840.0
M24	3.00	190.0	914.0	222.0	1066.0
M27	3.00	248.0	1339.0	289.0	1561.0
M30	3.50	303.0	1817.0	354.0	2124.0
M33	3.50	371.0	2449.0	437.0	2884.0
M36	4.00	441.0	3173.0	515.0	3708.0

To measure the torque there are still different units common. Below you can find a convertion table.

Conversions			
Kg.cm	0.0981 Nm		
Kg.m	9.81 Nm		
lb.in	0.083 lb.ft	0.113 Nm	
lb.ft	12.0 lb.in	1.356 Nm	
Nm	8.851 lb.in	0.738 lb.ft	
kpm	7.23 lb.ft	86.8 lb.in	9.807 Nm

Below you can find a table for torque and tension for different Property Classes – SAE Type Bolts.

Cap Screw Diameter	Grade 2			Grade 5			Grade 8		
	Minimum Yield Strength (psi)	Torque (ft-lb)		Minimum Yield Strength (psi)	Torque (ft-lb)		Minimum Yield Strength (psi)	Torque (ft-lb)	
		UNRC	UNRF		UNRC	UNRF		UNRC	UNRF
1/4	57,000	6	7	92,000	10	11	130,000	14	15
5/16	57,000	12	14	92,000	20	22	130,000	28	31
3/8	57,000	22	25	92,000	36	40	130,000	50	60
7/16	57,000	35	39	92,000	57	64	130,000	80	90
1/2	57,000	54	61	92,000	90	100	130,000	125	140
9/16	57,000	77	87	92,000	125	140	130,000	180	200
5/8	57,000	107	122	92,000	175	200	130,000	240	280
3/4	57,000	190	212	92,000	310	340	130,000	430	480
7/8	57,000	193	216	92,000	500	550	130,000	700	770
1	36,000	290	320	92,000	740	810	130,000	1050	1150
1 1/8	36,000	410	470	81,000	930	1040	--	--	--
1 1/4	36,000	580	645	81,000	1300	1440	--	--	--
1 3/8	36,000	760	870	81,000	1700	1900	--	--	--
1 1/2	36,000	1010	1115	81,000	2270	2550	--	--	--

THREAD INSERTS FOR THREAD REPAIR

Thread Inserts (also called Heli-Coil) are used if the originally thread has been damaged. Coil inserts are made from high quality stainless steel wire, with a diamond shaped cross section, wound to the shape of a spring thread. The insert, which is larger in diameter than the tapped holes is compressed during installation then allowed go spring back, permanently anchoring the insert in the tapped hole.

Steps in repair:

- Drill out the damaged threads using the drill size specified in the manufacturers catalog
- Tap the hole using the special Coil Tap specified in the manufacturers catalog
- Install the replacement Coil. Wind the Coil into the hole. To brake the tang using the recommended special tool.

Advantages of Heli-Coil:

- They create stronger and more efficient threads.
- Simply and easy to use.
- Designed for use in material such as alloys, steel, magnesium, plastic etc.
- Simplifies changeover from inch to metric, and vice versa
- Meets Aviation Specifications
- Coils are interchangeable with other brands of helically wound inserts.
- Wide temperature range of up to 430°C
- Specials available in Inconel or Phosphor Bronze

The Coil Range:

The multiple size repair kit range from Unified, Metric, NPT, Spark Plug and British Standard thread forms.

- Inserts are available in five lengths,1 x dia. to 3 x dia.
- Inserts are available as replacement packs, bulk or stripfeed.
- Inserts are available in free running or screw lock style for applications where the thread assembly is subject to vibration.
- Inserts can be supplied in Inconel X-750 for high temperature applications.
- Coatings such as cadmium, silver and dry film lubricant are available.
- High speed taps with either intermediate, taper or bottoming leads and spiral point or spiral flute for machine applications.
- Wide range of tools and accessories:

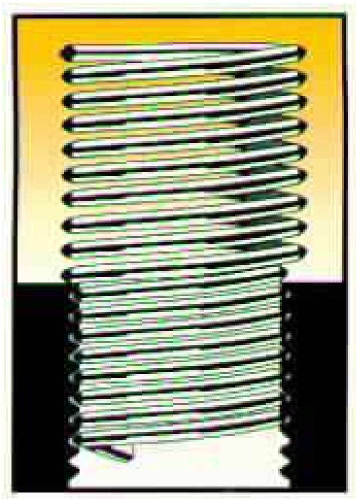

Sample of ISO – Tables

Table for Basic Shaft System – h6 (all limits in μm – 1 μm = 0.001 mm)

		Loose Fit			Transition Fit				Force Fit	
Nominal Size mm	**h6**	**F8**	**G7**	**H7**	**J7**	**K7**	**M7**	**N7**	**R7**	**S7**
1 to 3	0 -6	+ 20 + 6	+ 12 + 2	+ 10 0	+ 4 - 6	0 -10	- 2 - 12	- 4 - 14	- 10 - 20	- 14 - 24
3 to 6	0 -8	+ 28 + 10	+ 16 + 4	+ 12 0	+ 6 - 6	+ 3 - 9	0 - 12	- 4 - 16	- 11 - 23	- 15 - 27
6 to10	0 -9	+ 35 + 13	+ 20 + 5	+ 15 0	+ 8 - 7	+ 5 - 10	0 - 15	- 4 - 19	- 13 - 28	- 17 - 32
10 to 18	0 -11	+ 43 + 16	+ 24 + 6	+ 18 0	+ 10 - 8	+ 6 - 12	0 - 18	- 5 - 23	- 16 - 34	- 21 - 39
18 to 30	0 -13	+ 53 + 20	+ 28 + 7	+ 21 0	+ 12 - 9	+ 6 - 15	0 - 21	- 7 - 28	- 20 - 41	- 27 - 48
30 to 50	0 -16	+ 64 + 25	+ 34 + 9	+ 25 0	+ 14 - 11	+ 7 - 18	0 - 25	- 8 - 33	- 25 - 50	- 34 - 59
50 to 65	0 -19	+ 76 + 30	+ 40 + 10	+ 30 0	+ 18 - 12	+ 9 - 21	0 - 30	- 9 - 39	- 30 - 60	- 42 - 72
65 to 80	0 -19	+ 76 + 30	+ 40 + 10	+ 30 0	+ 18 - 12	+ 9 - 21	0 - 30	- 9 - 39	- 32 - 62	- 48 - 78
80 to 100	0 -22	+ 90 + 36	+ 47 + 12	+ 35 0	+ 22 - 13	+ 10 - 25	0 - 35	- 10 - 45	- 38 - 73	- 58 - 93

Table for Basic Hole System – H7 (all limits in μm – 1 μm = 0.001 mm)

		Loose Fit			Transition Fit				Force Fit	
Nominal Size mm	**H7**	**f7**	**g6**	**h6**	**j6**	**k6**	**m6**	**n6**	**r6**	**s6**
1 to 3	+ 10 0	- 6 - 16	- 2 - 8	0 - 6	+ 4 - 2	+ 6 0	+ 8 + 2	+ 10 + 4	+ 16 + 10	+ 20 + 14
3 to 6	+ 12 0	- 10 - 22	- 4 - 12	0 - 8	+ 6 - 2	+ 9 + 1	+ 12 + 4	+ 16 + 8	+ 23 + 15	+ 27 + 19
6 to 10	+ 15 0	- 13 - 28	- 5 - 14	0 - 9	+ 7 - 2	+ 10 + 1	+ 15 + 6	+ 19 + 10	+ 28 + 19	+ 32 + 23
10 to 18	+ 18 0	- 16 - 34	- 6 - 17	0 - 11	+ 8 - 3	+ 12 + 1	+ 18 + 7	+ 23 + 12	+ 34 + 23	+ 39 + 28
18 to 30	+ 21 0	- 20 - 41	- 7 - 20	0 - 13	+ 9 - 4	+ 15 + 2	+ 21 + 8	+ 28 + 15	+ 41 + 28	+ 48 + 35
30 to 50	+ 25 0	- 25 - 50	- 9 - 25	0 - 16	+ 11 - 5	+ 18 + 2	+ 25 + 9	+ 33 + 17	+ 50 + 34	+ 59 + 43
50 to 65	+ 30 0	- 30 - 60	- 10 - 29	0 - 19	+ 12 - 7	+ 21 + 2	+ 30 + 11	+ 39 + 20	+ 60 + 41	+ 72 + 53
65 to 80	+ 30 0	- 30 - 60	- 10 - 29	0 - 19	+ 12 - 7	+ 21 + 2	+ 30 + 11	+ 39 + 20	+ 62 + 43	+ 78 + 59
80 to 100	+ 35 0	- 36 - 71	- 12 - 34	0 - 22	+ 13 - 9	+ 25 + 3	+ 35 + 13	+ 45 + 23	+ 73 + 51	+ 93 + 71

Assessment of Participants

Previous Knowledge about Bearing

1. Do you have any experience with bearings? ☐ Yes ☐ No

2. What kind of experience?

____

____

3. Name some machines/devices, which contains bearings.

-	-	-
-	-	-
-	-	-
-	-	-

4. Name different kind of bearings.

-	-
-	-
-	-
-	-

5. Name the parts, which a bearing consists of?

-	-
-	-
-	-

6. What stands the Appendix “C3” in bearing designation for?

____

7. What stands the Prefix “NU” in bearing designation for?

____

8. Name some tools you need to mount and dismount bearings.

-	-
-	-
-	-

1. Do you know what a floating and a locating bearings is? ☐ Yes ☐ No

Maintenance & Repair - Module 1

(32 hours Course – Maintenance Management & Maintenance of Mechanical Drives)

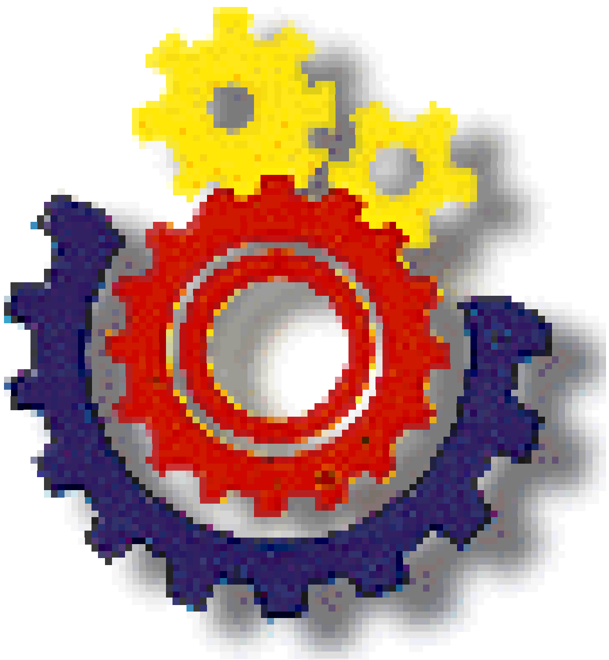

With technical assistance from:

GERMAN DEVELOPMENT SERVICE

ded

General Survey –"Maintenance & Repair"- Module 1 Course

TARGET PARTICIPANTS
min 18 years old, at least High School graduates, experienced workers, supervisors or leadsman

LENGTH OF COURSE
32 hours / 4 days

OBJECTIVES

At the end of the course, the participants should be able to:
"

- know different "Maintenance Strategies" and "Condition Monitoring" Tools
- know the importance of "Preventive Maintenance Schedule", "Maintenance Log" and "Repair History Log".
- know the principles and how to install and maintain different mechanical drives: Belt Drives, Chain Drives, and Enclosed Gear Drives.
- know the classification and the most common shaft couplings
- align shafts for the installation of couplings using different methods.
- know the hazards during maintaining mechanical drives and know how to work safe.
- calculate speeds for belt drives, chain drives and gear drives.

COURSE OUTLINE

THEORY (50 %)	HANDS-ON TRAINING (50 %)	METHOD
• Maintenance Strategies • Condition Monitoring Tools • Preventive Maintenance Schedule • Maintenance Log and History files • Typical mechanical drives and their accessories • Maintaining different kinds of drives • Types of check: lubrication, temperature, and vibration. • Alignment methods of mechanical drives • Applied Mathematics	• Work out the advantages/disadvantages of Maintenance Strategies • Align a typical disk coupling using the coupling alignment trainer • Install at least two complete mechanical drives on a base plate (electric motor, reducer, chain drive and electric motor, reducer, belt drive) • Make use of different couplings • Align all shafts and make a test run • Exercises in Mathematics	• Lectures/Discussion • Practical Sessions • Teaching Video

Table of Contents

August 2000

Dear Reader,

I would like to comment this handout, because otherwise you might get a little confused while studying it.
The most important thing to know is, that this handout is developed for a **non-formal** Training Center. The participating government officials and the involved companies were not interested in long-term courses. So, I had to respect the wish of my project partners for a course with this length and was limited on the most important subjects.

One or two of the modules are still under construction. Sorry for this.

DED – Development Worker

1. MAINTENANCE MANAGEMENT

A goal of maintenance **is to eliminate or to avoid** unnecessary or unplanned downtime due to failure. The objective of Maintenance Management (MM) is to ensure the reliability and safety of plant equipment. Knowing that all equipment components will wear, appropriate management must be applied to avoid unplanned failure.

Maintenance can influences the entire plant operation, from product quality to on-time delivery, to safety records and to the impact of environmental pollutions. Poor maintenance procedures can cost a company millions of Pesos in repairs and poor quality and lost production, whereas good maintenance practices can cut production costs immensely.

Still the advantages of MM are underestimated. Why is this so? Here are some samples on how we handle other common situations in life:

- *We go to the doctor only when we are sick*
- *Our car goes into the shop only for repairs*
- *In our home, we call electricians, plumbers, etc. only when there is a problem*
- *The focus of technical education is on dismantling/reassembling equipment*
- *In the workplace, the best "fixer" gets the promotion*

This **"bad habits"** has integrated itself into the maintenance workplace also. It is unlikely that these "habits" can be changed overnight. Moving from the approach of **"Fixing"** as the principal activity of maintenance to the approach of **"Wear Management"** - which is proactive - takes time, and a good engineering.

1.1 Types of Maintenance Strategies

Maintenance Strategy	Explanation
Run to failure Corrective Maintenance or Breakdown Maintenance	No routine maintenance tasks are performed on the equipment and then only after the equipment has suffered a failure. Repair or replace upon failure. (Reactive Maintenance)
Preventive Maintenance	Any maintenance activity for which a pre-determined job procedure has been documented, for which all labor, materials, tools, and equipment required to carry out the task have been estimated, and their availability assured before start of the task. Repair or replace on time or cycles.
Predictive Maintenance	An equipment maintenance strategy based on measuring the condition of equipment in order to assess whether it will fail during some future period, and then taking appropriate action to avoid the consequences of that failure. Employ condition monitoring to detect early stage failures. Replacement or repair is scheduled on-condition.
Planned Overhauling	The scheduled, comprehensive examination and restoration of e.g. machines, devices to an acceptable condition
Condition Monitoring Redesign and condition-control (proactive)	The use of specialist equipment to measure the condition of equipment. Vibration Analysis, Lubrication Analysis and Thermography are all examples of Condition Monitoring techniques. Changes in hardware, loading or procedures. Condition monitoring detects the presence of root causes of failure.
Redundancy	Deploy active shared-load or stand-by redundant systems

1.2 Shift from an overbalanced "Unscheduled Work" more to "Scheduled Work"

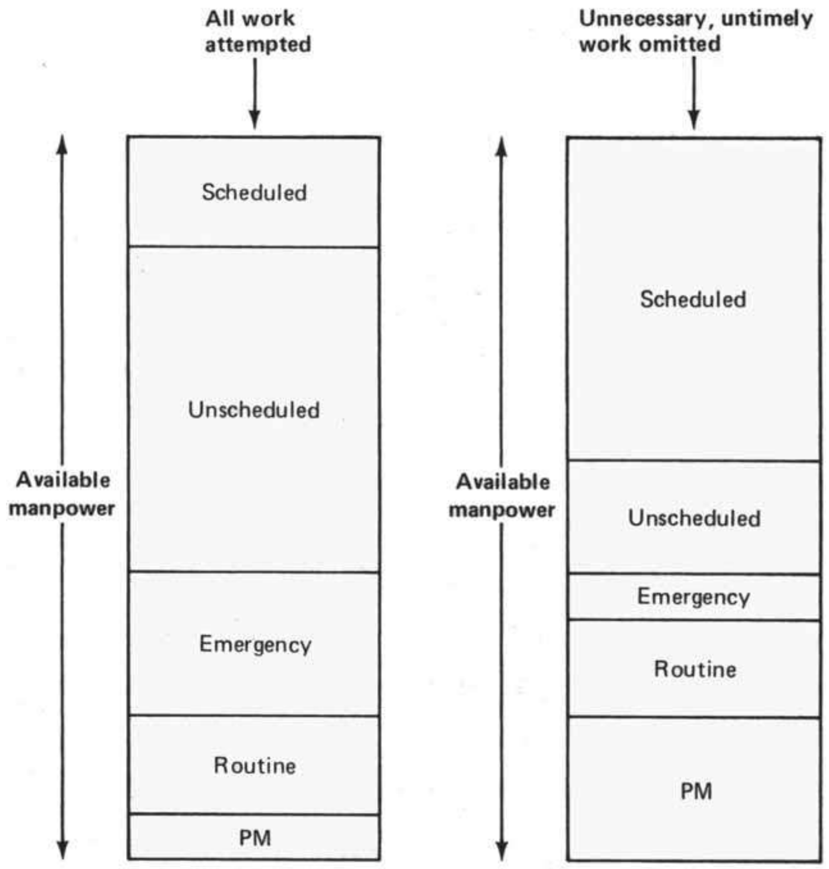

1.3 Example of a simple Preventive Maintenance Schedule

Time (weeks)

	1	2	3	4	5	6	7	8	9
Pump-1	AF	AF	AF	AF	AF	AF	AF	AF	AF
Pump-2	AG	AB	AG	AB	AG	AB	AG	AB	AG
Pump-3	ABCD	ABCD	ABCD	ABCD	ABCD	ABCD	ABCD	ABCD	ABCD
Gearbox-1	AB	AB	AB	ABD	AB	AB	AB	ABD	AB
Gearbox-2	A	AB	A	AB	A	AB	A	AB	A
Compressor-1	ABCF	ABCF	ABCF	ABCDF	ABCF	ABCF	ABCF	ABCDF	ABCF
Compressor-2	ABFG	ABFG	ABFG	ABFG	ABFG	ABFG	ABFG	ABFG	ABFG
E-Motor-1	AB	AB	ABC	AB	AB	ABC	AB	AB	ABC
E-Motor-2	AB	AB	AB	AB	AB	AB	AB	AB	AB
E-Motor-3	A	A	A	A	A	A	A	A	A

A = Visual Check & Lubrication Check
B = Temperature Check
C = Vibration Check
D = Lubrication Analysis (e.g. viscosity, content of abrasion…….)
F = Clean
G = Calibrate

1.4 Example of simple "Maintenance Log"

GEAR DRIVE MAINTENANCE LOG											
Location: Building 511, 1st floor									Machine: Paper mill # 5		
Gear drive type: Reducer 1:20									Serial no.: 10245156		
Date of putting in operation: 5/20/1997									Manufacturer: Flender Germany		
Special maintenance requirements: Oil Grade 05									Auxiliary drives: ☐ Belts ☐ Chain ☒ Coupling Flexible Coupling ☐ Others		
Date	Add Oil	Change Oil	Temp. Check	Vibr. Check	Lubri Analy-sis	Load Check	Aux. Drive Check	Change Seal	Change Bearing	Compl. Over-haul	Initials
1/5/00	Yes	/	86 C	/	/	46 A	Yes	/	/	/	Horst
Belt tensioned											
1/12/00	/	/	89 C	/	Yes	48 A	Yes	/	/	/	Horst
Change oil next week											
1/19/00	/	Yes	92 C	/	/	50 A	Yes	/	/	/	Horst
Gear box oil Grade 05											
1/26/00	/	/	85 C	510	/	45 A	Yes	/	/	/	Horst
O.K.											

1.5 Example of simple "Repair Report"

GEAR DRIVE REPAIR REPORT					
Location: Building 511, 1st floor			Machine: Paper mill # 5		
Gear drive type: Reducer 1:20			Serial no.: 10245156		
Date of putting in operation: 5/20/1997			Manufacturer: Flender Germany		
Date of Repair: 5/26/2000 Special maintenance requirements: Oil Grade 05			Auxiliary drives: ☐ Belts ☐ Chain ☒ Coupling Flexible Coupling ☐ Others		
Part	Failure	Mark	Part	Failure	Mark
Auxiliary Drive	Chain or belt broken		Gears	Seat worn out	
	Sprocket/Pulley worn out			Broken teeth	
	Keyway problem			Worn out teeth	X
	Drive shaft bent			Others	
	Coupling damaged		Lubrication	No oil	
	Coupling rubber broken	X		Little oil	X
	Others			Dirty oil	
Sealing	Lip seal defective	X		Water in oil	X
	Housing seal defective			Breather defective	
	Others			Others	
Shaft	Seat of bearing worn out		Housing	Cracked	
	Seat of Lip seal worn out	X		Problem with bolt connection	
	Bent or broken			Problem with pin connection	
	Others			Others	
Bearings	Worn out	X	Base Plate	Loose, weak	
	Excessive damaged			Problem with bolt connection	
	Others			Problem with foundation	

EQUIPMENT FILE

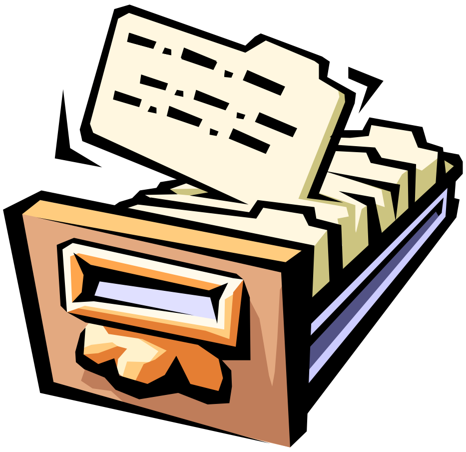

To ensure a quick and smooth planning of maintenance activities as well as the actual repair job, it is advisable to maintain an equipment file for all equipment, used in the plant.
The following data should be included:

1. Specification	• Type of equipment • Brand • Model • Date of installation • Serial number • Capacity • Speed • Load
2. Location	• Building • Floor
3. Technical Drawings	• Including detailed drawings
4. Spare Part No., and where to get them	• Bearing • Sealing • Lubricant • Drive • Coupling
5. History of Preventive Maintenance Activities	To monitor and improve Preventive Maintenance measures
6. History of Repair Activities	To find out the cause of break down and prevent the same failure again for the future

1.6 Condition Monitoring – 7 Tools

Lubrication Analysis	Analyzing lubricant samples at regular intervals. Lubricant analysis is in general strong in detecting failures in gearboxes, and hydraulic systems.
Vibration Analysis	Measuring vibrations of rotating machines. Vibration analysis is in general strong in detecting failures in high-speed rotating systems. Vibration analysis is especially strong in localizing the point of failure depending on the application.
Thermography	Measuring the temperature e.g. of bearings at relevant measuring points at regular intervals.
Visual Inspection	Maintenance personnel travel scheduled routes checking such things as the presence of coupling guards and the integrity of belts.
Operational-dynamics Analysis	Using various devices, employees check equipment to make sure it's meeting design specifications. A damper might be checked to make sure it's receiving a 50-percent airflow, as designed.
Electrical Monitoring.	Technicians regularly check all electrical components with voltmeters, infrared equipment, and other devices to guarantee their operational integrity.
Failure Analysis	This determines why a piece of equipment failed and how that can be prevented in the future.

Effectiveness of Lubrication-Analysis, Vibration-Analysis and Thermal-Analysis in compare:

	Predictive What is going to happen?			**Failure Analysis Why did it happen?**		
	Lube Analysis	**Vibe Analysis**	**Therm Analysis**	**Lube Analysis**	**Vibe Analysis**	**Therm Analysis**
Root Causes Control						
Lubricant contamination	**excellent**	poor	poor	**excellent**	poor	fair
Misalignment	fair	**excellent**	fair	fair	**excellent**	fair
Imbalance	fair	**excellent**	fair	poor	**excellent**	fair
Wrong lubricant	**excellent**	poor	poor	**excellent**	poor	poor
Degraded lubricant	**excellent**	poor	poor	**excellent**	poor	poor
High operating	fair	fair	**excellent**	fair	fair	**excellent**
Failure Detection						
Wear	**excellent**	good	fair	**excellent**	fair	fair
Cavitation	good	poor	fair	fair	poor	fair
Gear tooth fracture	poor	**excellent**	poor	fair	fair	poor
Structural resonance	poor	**excellent**	poor	poor	**excellent**	poor
Fatigue	**excellent**	good	good	fair	fair	**excellent**

1.6.1 Lubrication Analysis

Fluid condition management, when properly implemented, delivers the following productivity and profitability improvements:

- Minimized downtime
- Extended machine life
- Reduced labor costs
- Reduced fluid consumption and disposition costs.

What should be analyzed after taking a sample from a machine?

• **Chemical Properties**	Because of the oxidation of the lubricant, the durable molecules break into smaller pieces, which changes the properties of the lubricant. The test includes e.g. the viscosity, the decrease of additives, the flashpoint.
• **Fluid Contaminants**	If the lubricant carries other fluids, most likely water. These fluids are not so good at minimizing friction, so they are considered contaminants.
• **Solid Contaminants**	Mechanical action within machines creates mechanical stress that sometimes exceeds the elastic limits of the metal. Microscopic pieces of metal break off the component surface. The oil carries those pieces away so more stress can break off more pieces.

1.6.2 Vibration Analysis

The vibration analysis is a condition-monitoring tool, which is capable of measuring vibration caused by rotational and structural problems like imbalance, misalignment, looseness etc. It is also capable of measuring vibration in higher frequencies caused by rolling bearing problems. The results are usually compared with previous data to ensure that there is for each measuring point a history.
Companies, which use Vibration monitoring, have many advantage:

- Less Downtime
- Less Spare Parts Inventory
- Less Overhaul-Overkill
- Longer Production Runs
- Better Quality

Using vibration analysis, companies will have a list of "invisible" anomalies. This list will show problems long before failure, which will allow repairs to be scheduled during off hours. Problems with bearings are detected long before they fail so that other associated mechanical components are unaffected. No shafts are broken so the repairs are done in a fraction of the time. During repairs, other machines that have impending problems detected with vibration monitoring can be corrected. The parts have been ordered in advance as needed.

Especially for important equipment like Turbines, Engines, Fans, Conveyors, Pumps, Gear Boxes, etc. is advisable to monitor continuously using transducers, which are connected with a data-storage system.

1.6.3 Thermography

Regular measuring of temperature at machines is like an early warning system. The results are usually compared with previous data to ensure that there is for each measuring point a history. There are contact and non-contact thermo tools available.

- An accurate contact tool comes often with a temperature range from –200 °C up to 1300°C. The accuracy is +/- 0.5°C.

- Non-contact measuring tools are normally laser tools. This method is safe and fast in use, even in critical application like hot surfaces or moving parts.

Similar to the vibration analysis, especially for important equipment like Turbines, Engines, Fans, Conveyors, Pumps, Gear Boxes, etc. is advisable to monitor continuously using transducers, which are connected with a data-storage system.

2. MECHANICAL DRIVES - BELT DRIVES

In general, we can say that belt drives transfer the turning moment between two shafts. This is possible because of the contact force between the belt and the belt wheels. The required contact force is generated, by the belt **pre-tension,** which is applied during the installation of a belt drive.

Advantages of belt drives:
- Can operate at much higher speeds than chain drives
- Elastically load transmission (quiet operation)
- Cheaper than chain drives
- Easier and cheaper to maintain than chain drives
- Lower own weight compared to chain drives (less centrifugal forces)
- Wide horsepower range (for heavy loads multiple belt drives possible - up to 12 belts)

Disadvantages of belt drives:
- Limited shaft distances
- High loads for the bearings
- Due the slip effect lower speed at the driven wheel

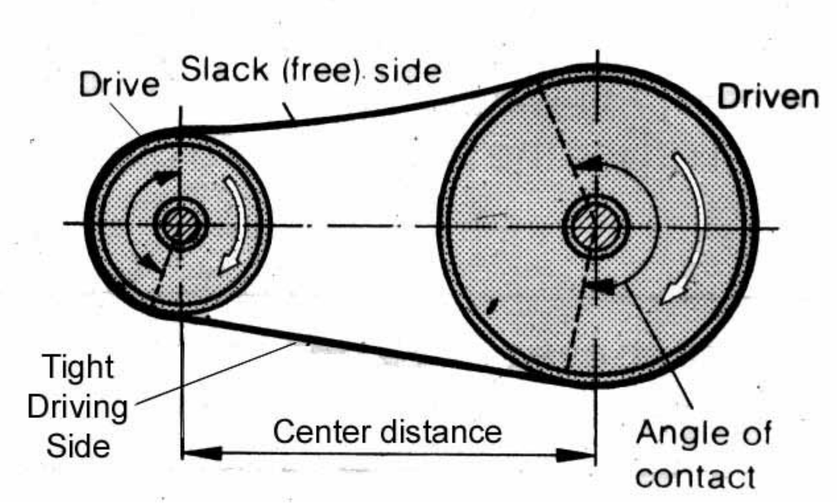

2.1 Flat Belt Drives

This type of belt requires great care during installation. Sometimes the belts are even cut to length and spliced direct on the jobsite. Only experienced workers should do this job. The common materials are leather, nylon or a combination of both. To bring the two ends of the belt together there are different techniques from gluing, sewing and fixing with fasteners.

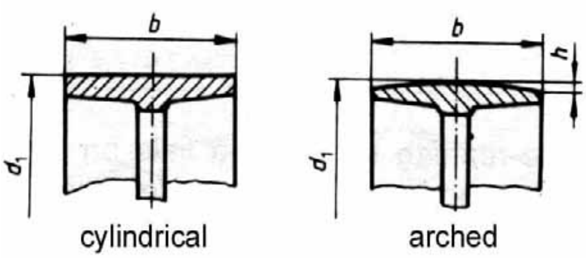

Types of pulleys for flat belt drives

2.2 V-Belt Drives

V-Belts are endlessly produced belts with a trapezoidal cross-section. The most common material combination in use is a rubber body with nylon fibers or tire cord inside to increase the tensile strength. V-belt drives can work with transmission ratios up to 10:1.

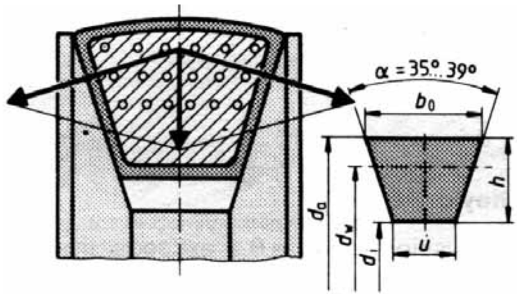

V-belt direction of force and trapezoid dimensioning

V-belt pulleys are constructed single or multi-grooved. Be carefull and use the right belt-form for the given pulley groove.

2.2.1 Installation of V-belt drive

- Check if the V-belt will fit to the pulley. Only a fitting belt can transform the full transmission load.

- Align the two pulleys carefully using a straightedge. Misaligned drives can damage the bearing and the belt itself. Especially when installing multiple belt drives it is extremely important to align properly, because otherwise not all of the belts will carry the same load. The vertical misalignment should not exeed 0.5 degree.

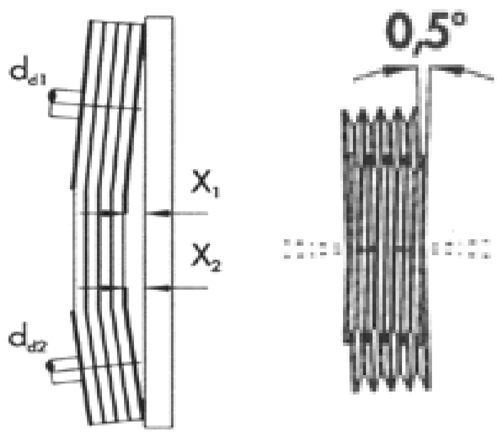

- Adjusting the V-belt tension is also very important for the working life of the whole drive including the bearings. Consult the belt manufacturer to find the recommended tension for the belt. Some manufacturers offer some tension test devices

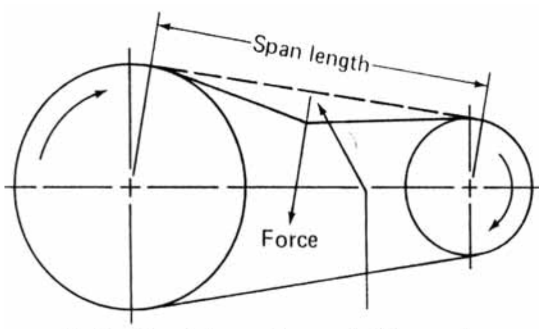

Deflection 1.5 mm for each 10 cm of span

- The most common techniques to tension belts are the use of elongated holes with adjustment spindles and the use of rockers.

- For machines with nonadjustable centers, the best way to take up the slack is to install a tensioner.

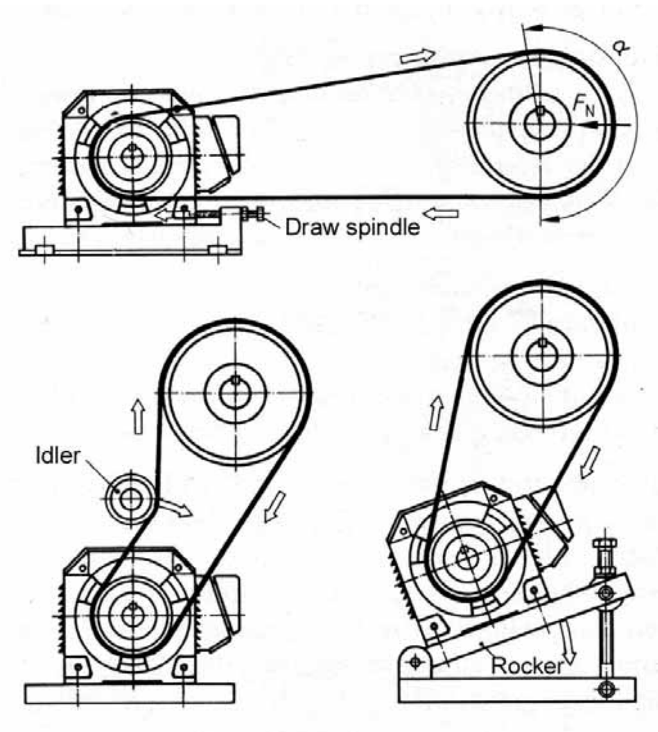

2.2.2 Maintenance Principles for V-Belt Drives

There are two generally accepted maintenance principles for installing new belts or any multiple-belt drive.

Principle No. 1: Always replace all the belts.
Older belts naturally become stretched or worn from use. If old and new belts are mixed, the new belts will be tighter, will carry more than their share of the load, will probably fail before their time and may also contribute to uneven pulley wear.

Principle No. 2: Always use a matched set of belts from one manufacturer.
If unmatched belts and brands are mixed, the belts may have different dimensional and performance characteristics, and they could work against each other, resulting in unusual strain and short service life.

Principle No. 3: Always adjust belts after a short run-in period
The newer generations of belts are made of thermally active polyester tensile cords with a higher elongation resistance. Even for this new type of belts, it is recommended to re-adjust the tension of the belts after a short run-in period.

V-Belt Drive Troubleshoot:

Problem	Cause	Cure
Belt slips	• Drive under-tensioned • Drive overloaded • Worn pulleys • Shock loads	• Re-tension properly • Redesign with larger pulleys or more belts • Replace Pulleys • Drive under-tensioned or under-loaded. Check drive design
Belts wears rapidly	• Pulleys worn • Overloaded drive • Belt hitting guard/frame • Dirt and grit entering drive	• Replace or re-machine • Redesign with larger pulleys or more belts • Provide more clearance • Provide closed guards
Belt mis-matched	• Mixed old and new belts • Belts not of same make • Worn or improperly machined pulleys	• Replace with new set • Replace with new set • Belt will ride at different positions in the grooves. Replace Pulleys.
Belt brakes	• Improper belt installation • Insufficient tension • Shock loads	• Belt squeezed over pulley. Install new belts properly • Belts whipped on start-up or under shock • Drive under-tensioned or under-loaded. Check drive design
Belt jumps grooves	• Drive misaligned • Tensioner not located properly • Excessive whip and vibration	• Check and realign • Redesign tensioner position • Shorten center distance or add tensioner
Belts crack	• Belt slipping • Excessive heat • Pulley or tensioner to small • Chemical attack	• Increase tension • Provide adequate ventilation. Check slippage • Increase diameter • Provide adequate protection
Belt vibration	• Pulleys not balanced • Weak base construction • Resonant condition	• Provide dynamically balanced pulleys • Redesign with additional supports or bearings • Until there is an improvement try to change center distance; increase or decrease number of belts or add tensioner

2.3 Positive-Drive Belts (also Synchronous Belt or Toothed Belt)

Positive-belt drives are widely in use in all parts of industry. One advantage of this belt type is the constant speed for driven wheel and drive wheel, because of the teeth, which do not allow any slip.

To install positive-drive belts, follow the same general procedure as for V-belts. It is normal for this type of belts to ride towards one side of the pulley when operating. Most of the pulleys will come with two flanges. If there is only one flange, then install the flanged side to the side where the belt moves.

Positive-belts do no rely heavily on tension to operate. Unlike V-belts and flat belts, all they need is to fit properly on the pulley, tooth to tooth. If available, follow the instructions of the belt manufacturer to tension the belt. This will extend the life expectancy. Tensioners should be used whenever it is absolute necessary to prevent a jump over of some teeth of the belt.

The material of "Synchronous Belts" is normally a polyurethane body for abrasion and chemical resistance, and for stretching resistance aramid fiber tensile cords. The tensile cords also provide excellent flex fatigue life and high resistance to shock and alternating loads. Nylon facing gives strength and durability to the belt teeth.

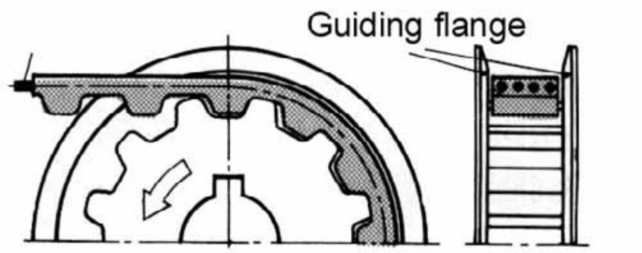

Toothed belt drive (synchronous belt drive)

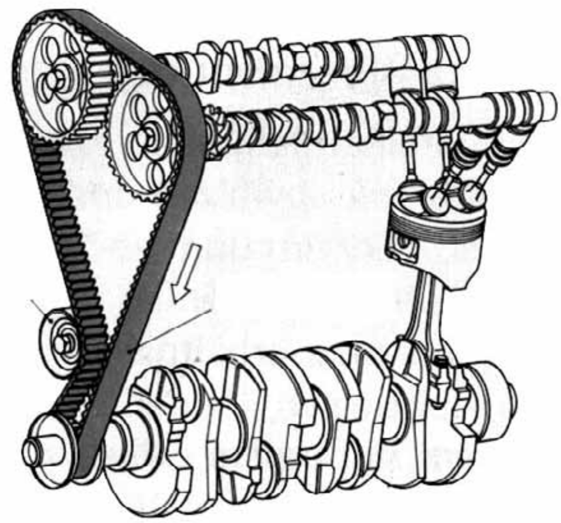
Toothed belt with idler for driving camshafts

3. CHAIN DRIVES

In general, chain drives transfer slip-free power between two shafts over a distance which cannot be bridged with gears. The transmission forces are carried by the chain-links gripping in the teeth of the sprocket wheels.

Advantages of chain drives:
- Usable in a wide range of drive applications
- Moderate to heavy loads
- Can be used in critical areas where moisture, heat and oil is present

Disadvantages of chain drives:
- Only for lower speeds (except high performance precision roller chain drives)
- Relatively high maintenance costs
- With moderate or high speeds permanent lubrication necessary

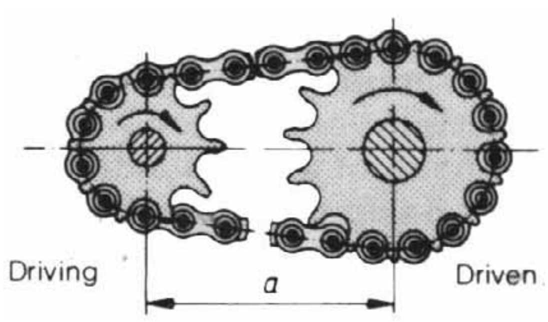

Simple chain drive

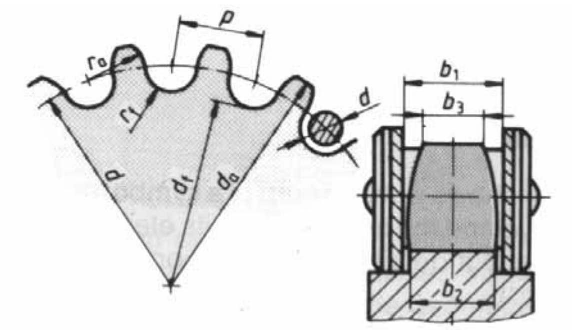

Main dimensions of sprocket wheel

3.1 The Sprocket

Sprockets are available on the market in a big variety. They are normally made out of the following materials: Low Carbon Steel, High Carbon and Cast Iron.
The borehole comes often with standard sizes. It must be machined to the required size.

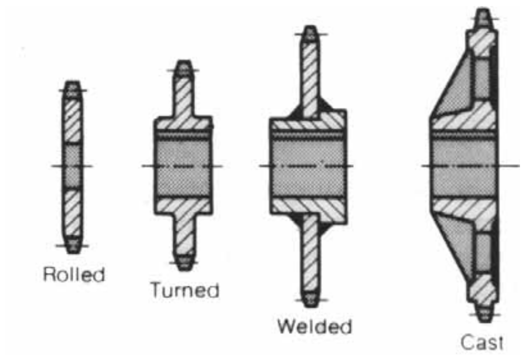

Manufacturing method

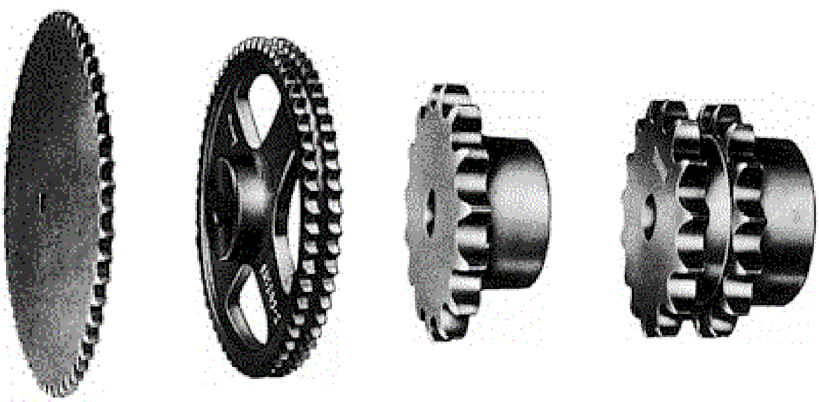

Sprocket Teeth:
Chain drives are also used for high-speed power transmission. To meet this requirement, the **sprocket tooth tips** are strengthened by means of high frequency hardening.
Hardening of tooth tips is required in the following cases:

- The number of teeth is 24 or less and the sprocket is used at higher speeds
- Small sprockets and speed ratios over 1:4
- Use with heavy loads at low speed
- Use under abrasive conditions

3.2 The Chain

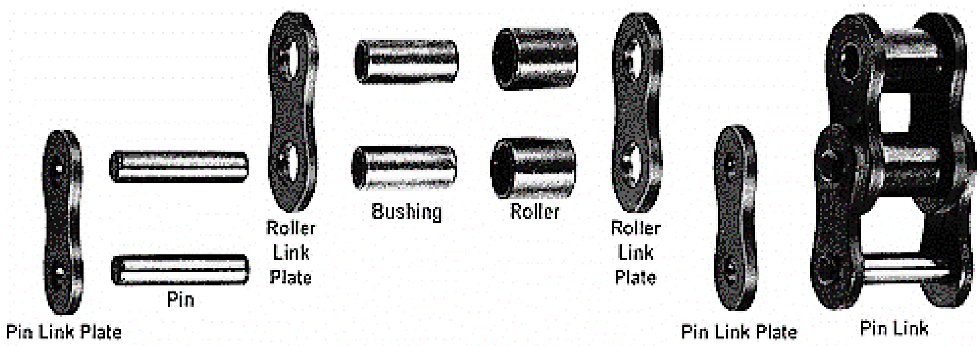

3.2.1 Roller chain layout

Speed Ratio and Chain Lap
The speed ratio of Chain drives can range up to 7:1 under normal conditions. However, a speed ratio of 10:1 is possible if the required speed is very slow. Chain lap on the small sprocket must be at least 120°.

Distance between Shafts
Optimum distance between sprockets is 30 to 50 times the pitch of the chain except when there is a pulsating load. In such cases, the distance can be up to 20 times the pitch of the chain.

Layout
When arranging the roller chain drive, the centerline of both sprockets should be as close to horizontal as possible, though the angle of installation can be up to 60°. If installation is close to vertical, the chain tends to slip off the sprockets easily with slight chain elongation, In this case, an idler or guide stopper is recommended.

3.2.2 Roller chain Installation

Aligning Shafts:
For efficient operation, both the driving and driven shafts must be level and they must be parallel which each other. To align the sprockets use a straightedge. Misaligned drives can damage the bearing after a short time.

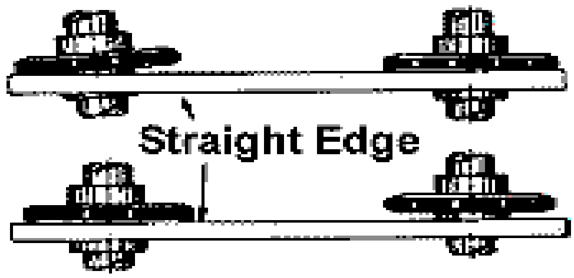

Chain Tension:
Generally, roller chain is used with adequate slack. If the chain is tightened excessively, chain damage or rapid use of lubricant may result. If the chain is too loose, damage due to vibration or chain winding, may result. Adequate slack is to be adjusted to 2 % up to 4% of the chain span. For example, if the span is 800mm, slack should be 800mm x 0.04 = 32mm. The chain will elongate slightly from the beginning of initial driving from 0.05% to 0.1% of the full length. As this causes extra slack, adjustment of slack is required. An idler can be used to take up the slack or the shaft can be adjusted. After this adjustment, chain elongation should be minimal. If you place the idler outside the chain loop (picture A, B, C) install it nearer to the small drive sprocket. If you place it inside the chain loop, (picture D) mount it nearer to the large sprocket.

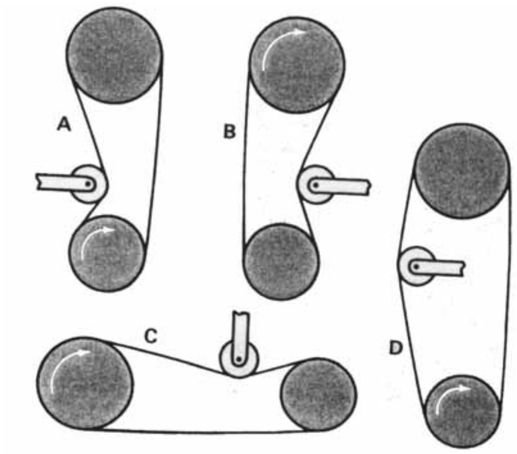

3.2.3 Roller chain Lubrication

Proper lubrication of roller chain is essential for good performance and full chain life. Care should be taken to strictly follow the lubrication schedule and recommendations. If this is not done, the service life of the chain will be shortened and maximum power transmission will not be delivered, no matter how high performing the chain or sprocket is.
Since wear between pins and bushings cause chain elongation, lubrication must be maintained on all contact surfaces. Proper lubrication forms an oil film which:

- Reduces abrasion and chain wear
- Reduces chain friction and noise
- Functions as a coolant when the chain is run at high speeds
- Functions as a cushion against impact

Only high-grade oil of suitable viscosity should be used. The proper type of oil to be used depends on the chain specifications, working conditions and lubrication system.

Oils to avoid:
Heavy oil, Low-grade oil, Impure oil or grease, Used oil

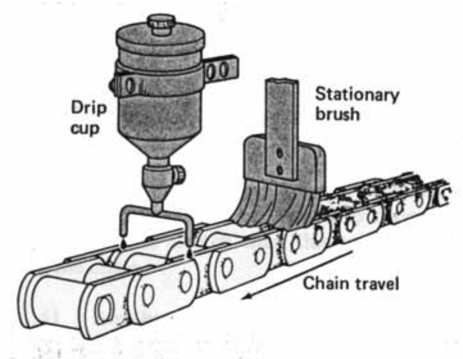

Types of lubrication application:

- Manual Application - Oil is applied with an oil filler or brush on the slack side of the chain.
- Oil Bath Lubrication - The chain is installed in a leak free casing.
- Lubrication By Rotating Disc - Oil can be splashed on the chain using a rotating disc installed in a leak-free casing. For this method, speed along the circumference of the disc should be over 200 m/min. If the width of the chain is over 125 mm, use a rotating disc on both sides
- Lubrication Using a Pump - The chain is contained in a leak free case and a pump is used to circulate and cool the oil

3.2.4 Chain Maintenance

Chain is usually replaced when the chain does not engage properly with the sprocket due to damage of its parts or elongation. To help prevent premature wear or damage, the following points should be checked. Observe the chain and sprockets for these items:

- Abnormal Noise
- Chain rising on the sprocket
- Stiff bending of chain
- Whether the chain contacts the case
- Damage on the sprocket teeth surfaces and side surfaces of teeth and engaging area
- Bending of chain and rotation of roller
- Vibration of the chain
- Chain winding around the sprocket
- Amount and condition of lubrication
- Abrasive stretch of the chain
- Appearance of chain, check for dirt, corrosion, damage on the outside surface of the roller, contact marks, etc

Lubrication
While the chain is driving, check if the lubricating oil moves toward the link plates, and if the chain or rotating disc is immersed in the lubricating oil of the oil bath. When the chain is stopped, check for dirt or abrasive particles produced by improper lubrication. When the chain is removed, the connecting link pin and the edge of the inside of the bushing should be checked. If there is any damage, or a red or reddish brown color can be noticed, lubrication is improper or insufficient. Regardless of the lubricating system used, roller chain should be washed periodically with petroleum or gasoline.

Sprocket
Chain and sprocket engagement can be checked by observing the roller and tooth surfaces. The installation should also be checked. The normal area where wear will occur is slightly above the bottom of the lowest point between the sprocket teeth.

Chain Elongation
Chain stretch is calculated as the total amount of elongation caused by wear. Chain life can be estimated by measuring chain elongation.
Measuring Chain Elongation:

- The chain should be measured by stretching it slightly
- Measure the distance, using a vernier caliper. Note: When measuring, use at least 6 to 10 links to help keep any measuring error to a minimum. When measurement cannot be done with a vernier caliper, it is possible, though less accurate, to use a tape measure. If a tape measure is used, the measured length should be as long as possible.

Maximum Allowable Chain Elongation

Number of teeth on driving sprocket	Chain Elongation
60 and under	1.5 %
61 to 80	1.2 %
81 to 100	1.0 %
100 and over	0.8 %

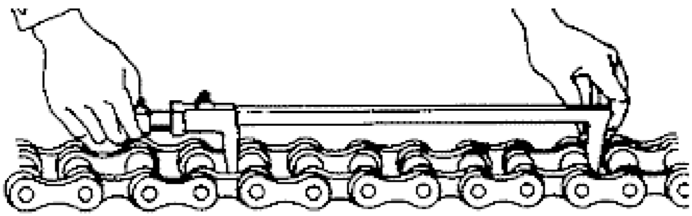

Replacement of Chain

There are two relatively simple methods for cutting Roller Chain. One way is to use bench vise and punch, and the other is to use a chain breaker:

Using a bench vise and punch:

- For riveted type Roller Chain, first grind down one end of the pin to be removed. For split pin type, be sure to take out the pin.
- Put the chain into the vise and tighten the vise to secure the chain.
- Hit the head of the pin with a punch or hammer. Be sure to hit the pins alternately so that they can be removed at the same time.

Note: For riveted types, be sure to grind off the riveted part of the pin. If the pin is taken out without grinding, it will take more time and may damage the chain

3.2.5 Chain Dimension

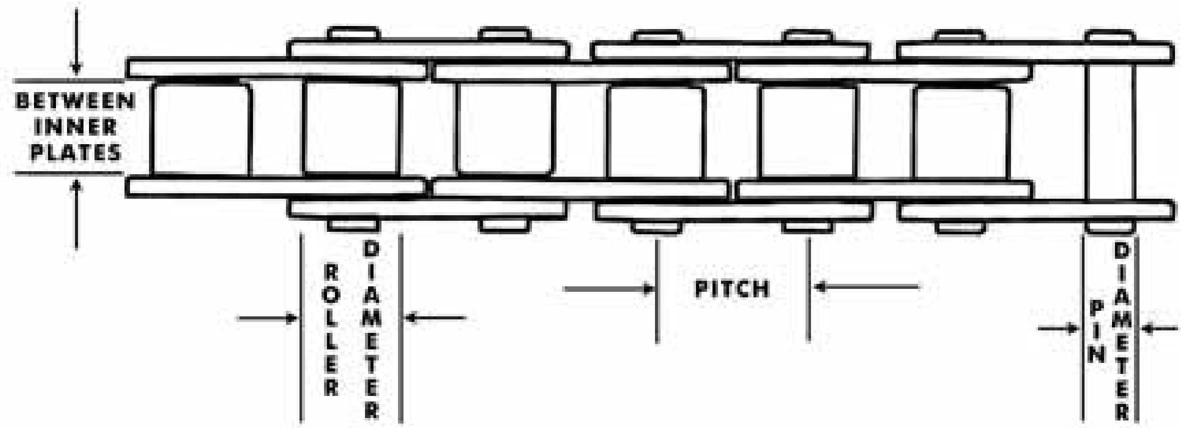

Chain No.	Pitch	Roller Diamter	Distance between Inner Plates	Pin Diameter
#25	¼	0.130”	1/8	0.091”
#35	3/8	0.200”	3/16	0.141”
#40	½	0.312”	5/16	0.156”
#41	½	0.306”	¼	0.141”
#50	5/8	0.400”	3/8	0.200”
#60	3/4	0.468”	½	0.234”
#80	1	0.625”	5/8	0.312”
#100	1 1/4	0.750”	¾	0.375”
#120	1 ½	0.875”	1	0.437”
#140	1 ¾	1.000”	1	0.500”
#160	2	1.112”	1 ¼	0.562”

4. MECHANICAL DRIVES – ENCLOSED GEAR DRIVES MAINTENANCE

This chapter will only handle the gear drive related maintenance topics. The “Maintenance & Repair Module 2” will give more detailed information about gear drives in general.

4.1 Gear-Drive Installation

4.1.1 Floor Mounting

The foundation should be always completely solid. It is not advisable to mount a drive direct on the floor. Steel base pads or the newer generation of hard rubber-nylon pads must be used to contact the drive to the floor.

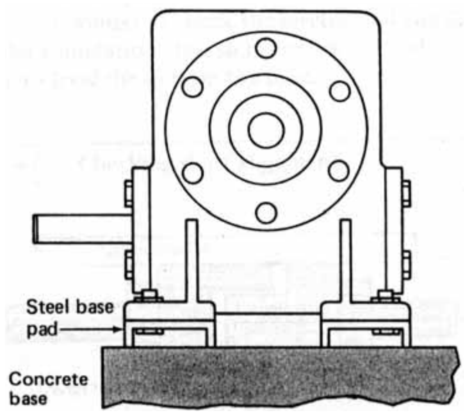

4.1.2 Structural Mounting

Enclosed gear drives are often mounted on the framework of the machine on which they drive. A support plate is used to hold the unit. The plate should be thick enough to support the weight of the drive and to stabilize the whole structure.

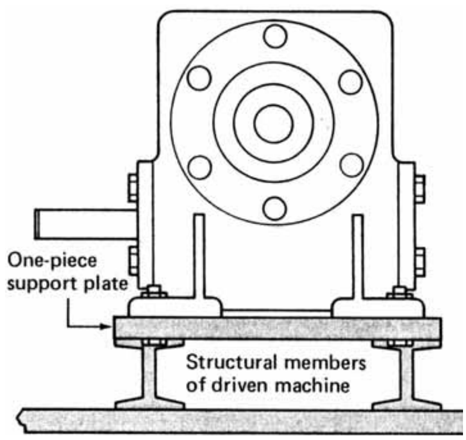

4.1.3 Leveling and Fixing the Gear Drive

Lift the gear drive over the mounting bolts or stud bolts and set it carefully down. Install, but do not tighten the fasteners. Use a spirit level to check the levelness of the drive and foundation. Use shims under the feet of the drive to level the unit on the base. Then tighten down all the bolts that hold it in place. Tighten the fasteners crosswise like when you mount a wheel on a car.

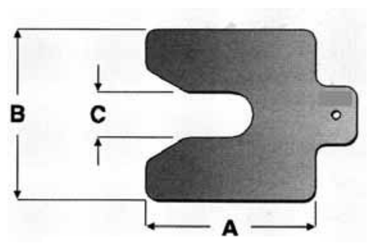

Shim

4.1.4 Installing the Accessories

Clean the input and output shafts of the gear drive and inspect the key seats in the shaft. Remove burr from the key seat corners. When installing auxiliary drives like belt drive, chain drive or straight coupling, think about the additional loads for the bearings if one of them will be misaligned. Cover all the moving parts with an appropriate casing. Make sure that the oil fill plug and the oil drain plug is accessible and not blocked by a part of the accessories.

4.1.5 Lubricate before Test-Run

Improper or inadequate lubrication is a leading cause of early gear drive failure. In addition, to the gearing, the bearings must be properly lubricated before the test-run.
Most gear drive housings have a small vent called "breather". This prevents the buildup of pressure or the formation of a vacuum inside the housing and assists the flow of lubricants within the drive. Be sure the breather is in good working condition.
Some gear drives are delivered already with the proper lubrication. Do not rely on that. Check the supply of lubrication and if necessary add some oil or grease. If you install the drive in a very hot or very cold operation environment, check with the manufacturer for special lubrication instructions.

4.1.6 Test Running (no-load test)

Make one final check to see that all the components in the drive package are securely tightened down on the base or foundation. Be sure that you have supplied the gear drive and other parts with the correct amount of the proper lubricant, as recommended by the manufacturers.
Do not connect the system to load. The purpose of no-load test is to see that all drive package components operate properly. It allows you to identify any faulty parts and repair or replace them before they can damage the equipment that is to be driven by the system. Make sure you alert all personnel concerned that you are about to test the drive. Start the motor and listen to unusual sounds.
If there are some strange sounds, stop the drive and disconnect the electric energy line (or lock the switch). After opening the top of the housing, check the gears and the movement of the bearings. Check the lubrication. Check the alignment of the shaft. After location and correction of the difficulty, replace the housing cover and start the drive again.

4.1.7 Run-In

After an acceptable no-load test, slowly apply about 50 % of the operation load. Listen carefully for unusual noises or signs of trouble, as you did when test-running the drive. If possible, allow the drive to operate under this half load for 8 to 10 hours. Check the hold-down bolts. Inspect also the other system components, particular belts, chains and couplings. If everything is o.k, increase the load to full operating level. Check the bearing temperature for excessive heat and watch for signs of abnormal oil leakage.

4.1.8 Condition Monitoring

Include the gear-drive in your condition-monitoring program. Develop a log chart for the drive system. Following the maintenance log, check regular oil level, temperature of bearings, vibration and take oil samples for lubrication analysis. Auxiliary drives should be also included in the maintenance program for the drive.

4.1.9 Storage

If an enclosed gear drive is to be stored in the plant for a longer period before being installed, special treatment is needed:

- Fill the drive completely with oil. Place a tag on the housing stating that the oil must be lowered to operating level before use.
- Keep the external shafts coated with a light film of oil or grease.
- Protect the shafts with clean oil soaked rags.
- Put also some oil on the visible seals to prevent drying out

4.2 Troubleshooting for Enclosed Gear Drives

	Possible Causes									Potential Solutions									
Symptom	Overloads	Lubricant problem	Bearing misaligned	Excessive overhung loads	Shaft misalignment	Insufficient thermal HP capacity	Faulty bearing	Faulty seals	Faulty breather	Check load vs. nameplate HP	Check type and quantity of lubricant	Inspect and replace bearings as needed	Reduce overhung load	Provide more cooling	Replace drive with larger unit	Check breather for functioning	Check and replace seals as needed	Clean up seal contact area on shaft	Check and align shafts
Excessive gear wear	•	•								•	•				•				
Bent or broken shaft	•			•	•					•			•		•				•
High temperature	•	•				•				•	•			•	•				
Bearing noise and failure	•	•	•	•			•					•	•						•
Oil leakage								•	•							•	•	•	
Broken gear teeth	•		•		•					•		•							

5. SHAFT COUPLINGS

Almost every mechanical drive used in industrial plants has a coupling. The main purposes of couplings are:

- To transmit power from a motor or engine to a machine (pump, gear box, fan, etc.)
- To compensate misalignments
- To compensate axial elongation of shafts

Shaft couplings range in size from extremely small ones (servo mechanism) to huge ones (electrical power plant generator).

5.1 Classification of Couplings

Practically we distinguish the following two types of couplings:

- Rigid Couplings
- Flexible Couplings
- Elastic Couplings

5.1.1 Rigid Couplings

Rigid couplings have the function to connect two shafts so that they are joined as made out of one piece. Exactly aligned shafts are required for this coupling type.

Split Coupling:
Transfer turning moment by frictional connection. The coupling is slotted and therefore after screwing up pressed against the shafts. The feather keys fix the location.
Uses: For small turning moments and low speeds

Shaft Coupling with tapered sleeves
Two exactly aligned shafts are connected by screwing up two conical rings on a tapered sleeve. Trough the conical rings and sleeves there are so much friction between the sleeve and the shafts, that it is not necessary to use feather keys.

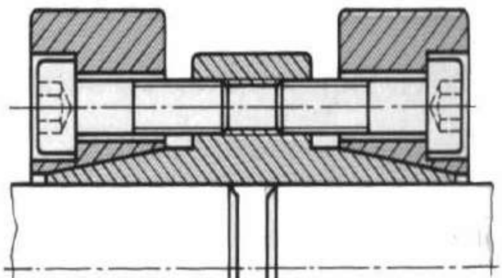

Rigid Coupling with Taper Sleeve

Disc Coupling:
The two half's are joined by precision bolts and transfer the turning moment by frictional connection and interlocking. Exact running of the shafts are guaranteed through groove and tongue connections.

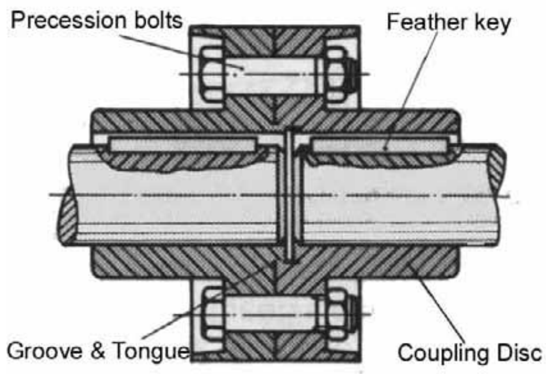

5.1.2 Flexible Couplings

These type of couplings transfer the turning moment through positive locking. They offer sufficient play for small changes in length and displacement of shafts.

Curved Teeth Coupling
To lock or unlock the coupling the toothed coupling muff is moveable designed. This can also compensate the elongation of the shafts. Used for high torques.

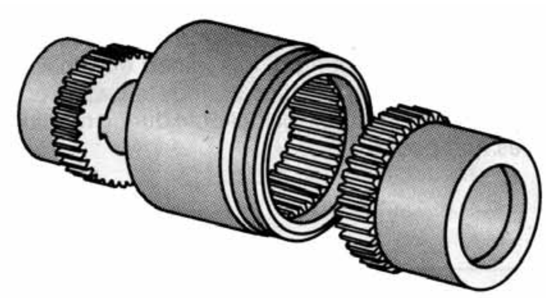

Claw Coupling
They transfer the turning moment with interlocking claws. Easy to install. Flexible enough to compensate some misalignment and some elongation of the shafts.

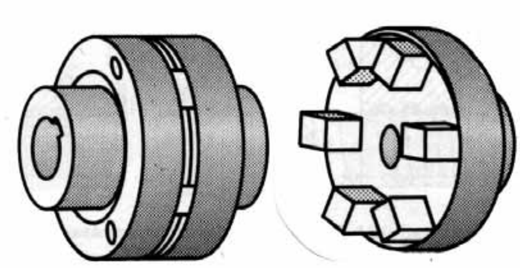

Roller Chain Coupling
The Roller Chain Coupling is a safe, compact and powerful flexible coupling, able to handle loads from 0.1 - 11,000 kW. The sprocket teeth are specially shaped and hardened, and torque is evenly apportioned

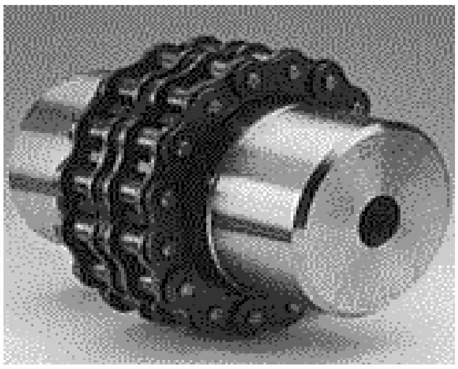

5.1.3 Elastic Couplings

These type of couplings transfer the turning moment through elastic elements. Bumps and vibrations are softened. The start of the driven machine is a little bit delayed because of the deformation of the rubber element, which is an advantage for the bearings. Elastic couplings offer sufficient play for small changes in length and displacement of shafts.

Claw Coupling with rubber elements

They transfer the turning moment with interlocking claws. Easy to install. Between the claws there is a rubber element inserted.

Disc Coupling with rubber bush

Both coupling discs are joined with precise machined alignment pins. One half of the coupling comes with holes in which are the rubber elements inserted.

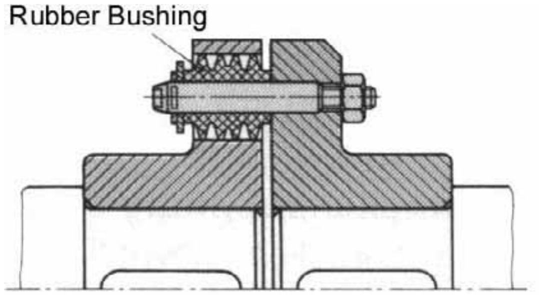

Elastic Coupling with Rubber-Bush

Rubber Ring Coupling

Both coupling discs are joined by a firmly clamped rubber ring. This rubber ring is strengthened by fiber layers similar to an automotive tire.

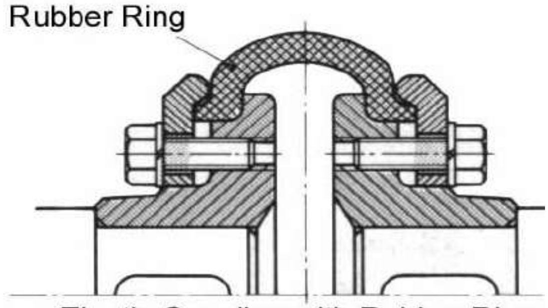

Elastic Coupling with Rubber Ring

5.2 Proper Coupling Selection

To make a good selection of coupling for the given application it is necessary to know some basics.

- **Horsepower** -- Almost every coupling is sized based on the horsepower to be transmitted. The exceptions would be chain and rigid designs, which are selected based on the shaft diameters to be coupled.

- **Type of Drive --** If the power source is a reciprocating engine, there can be problems with torsional vibration in a continuous steady form, which can be transmitted directly into the driven machine. The elastomeric design coupling can help to dampen this vibration.

- **Type of Driven Equipment --** Driven machines are classified according to their load characteristics, and a service factor is assigned based on those characteristics. Multiplication of the service factor by the input horsepower gives you the design horsepower upon which most couplings are sized.

- **Coupling Operating Speed --** Most selections are based on the HP at a certain RPM. As always, as the speed goes down the torque goes up. The other thing to check is that the maximum speed of the selected coupling is not exceeded.

- **Shaft Sizes –** The selected coupling must fit to the bore required. In many instances, it is necessary to go to a larger coupling than design would indicate in order to get the bore size you need.

- **Space Limitations –** The coupling's length and diameter must fit within the necessary confines.

- **Environment** -- If the environmental temperature it is over 77 degrees C or below -34 degrees C it can change the operating characteristics of an elastomeric coupling or effect the lubrication of a mechanically flexible coupling. If the environment is wet or oily, it limits the types of couplings you can consider. There are many environmental related things, which can affect the service life of a coupling.

6. SHAFT ALIGNMENT (COUPLING ALIGNMENT)

What is the Objective of accurate alignment?

The objective of shaft alignment is to increase the operating lifespan of rotating machinery. To achieve this goal, machinery components that are most likely to fail must operate within their design limits. Since the components that are most likely to fail are the bearings, seals, coupling, and shafts, accurately aligned machinery will achieve the following results:

- Reduce excessive axial and radial forces on the bearings to insure longer bearing life and rotor stability under dynamic operating conditions
- Minimize the amount of shaft bending from the point of power transmission in the coupling to the coupling-end-bearing
- Minimize the amount of wear in the coupling components
- Reduce mechanical seal failure
- Maintain proper internal rotor clearances
- Lower vibration levels in machine casings, bearing housings, and rotors

What are the Symptoms of misalignment?

Misalignment is not easy to detect on machinery that is running. Misalignment will be only obvious trough secondary effects of the following symptoms:

- Premature bearing, seal, shaft, or coupling failures
- Excessive vibration
- High casing temperatures at or near the bearings or high oil temperatures
- Excessive amount of oil leakage at the bearing seals
- Loose foundation bolts
- Loose or broken coupling bolts
- Some flexible coupling designs run hot under misalignment conditions. If it is an elastomeric type, look for rubber powder inside the coupling
- Unusually high number of coupling failures or they wear quickly
- The shafts are breaking (or cracking) at or close to the inboard bearings or coupling hubs

6.1 What to Align?

- Mounting Foot Leveling
- Alignment of Coupling Faces – Angular (coupling faces parallel)
- Alignment of Coupling Contour – Horizontal (bring them to same height)
- Alignment of Coupling Contours – Parallel (align them sideways)
- Adjusting the Gap between Coupling Half's (not all couplings!)

6.1.1 Mounting Foot Leveling

In the figure below you can see a plan view of a typical electric motor. This method is designed for rather bigger motors. Take the following steps to level the electro motor feet:

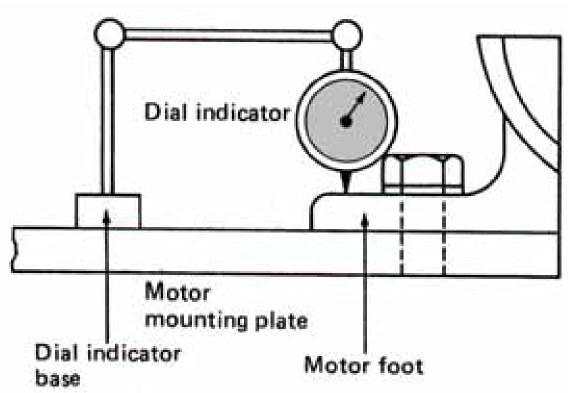

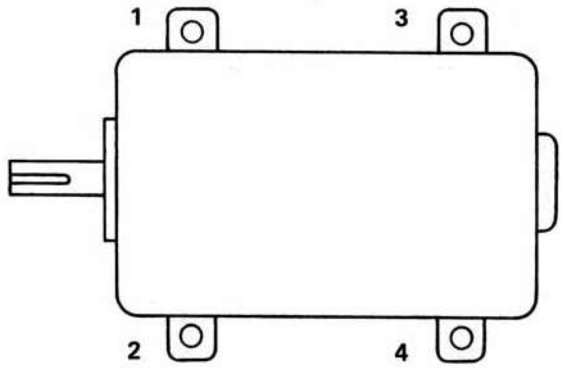

1. Tighten all four motor bolts.
2. Place the dial indicator on a clean surface of the motor mounting plate
3. Clean the indicator contact area on the motor foot (make use of a file)
4. Start with No.1, and place the point of the dial indicator on the cleaned surface
5. Set the dial indicator at zero.
6. Loosen the bolt holding down foot No. 1 and also the bolt of the next closed foot (No. 2)
7. Read the dial indicator to determine the amount of spring that has occurred.
8. Insert shims under foot No. 1 to take up the amount of spring.
9. Next, tighten all four motor bolts again. Move the dial indicator to foot No. 2. Repeat the procedure of loosening the bolts, reading the amount of spring, shimming, and re-tightening the bolts.
10. Move on to feet No. 3 and No. 4, following the same methods. If the dial indicator shows that no spring has occurred, then you need not add any shims under that particular foot. After you have removed all of the spring from the motor feet, the bolts will be relieved of excessive tension, and coupling alignment will be easier to accomplish.

6.1.2 Alignment of Coupling Faces – Angular (coupling faces parallel)

There are two common methods on how to determine the misalignment of the coupling faces.

- **The dial gauge method**
- **The feeler gauge method**

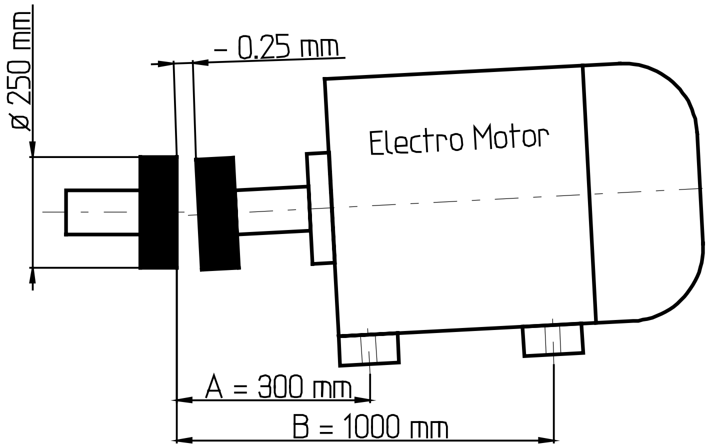

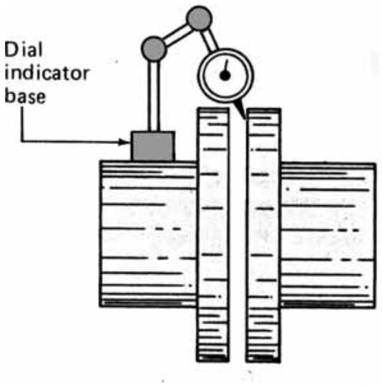

The Dial Gauge Method

Some computation is necessary to determine the shim thickness required to align couplings in an angular plane. Mount the dial indicator on one of the coupling half's and place the point of the indicator on the inside face of the other half. Turn the coupling half with the dial indicator 360 degree around and measure the misalignment.
In the example the angular misalignment on the top is **–0.25 mm**.
The diameter **"D"** of the coupling is **250 mm**.
The distance "**A"**, from the inside of the driven half to the centerline of the motors closer motor feet is **300 mm**.
The distance **"B"**, from the inside of the driven half to the centerline of the motors farther motor feet is = **1000 mm**.
To compute the required shim thickness under the motors **closer** and motor **farther** feet to correct the –0.25 mm angular misalignment, use the following formulas:

Shim (S) needed under closer feet:

S = Indicator reading x A/D
S = - 0.25 mm x 300 mm/250 mm
S = - 0.3 mm

Shim (S) needed under farther feet:

S = Indicator reading x B/D
S = - 0.25 mm x 1000 mm/250 mm
S = - 1 mm

The Feeler Gauge Method

Move the (not fully fastened) motor near the already fixed driven unit, until the gap is just a little larger than the specified gap. Simply insert the feeler gauge between the coupling half's at several positions as shown on the picture below. If the gauge cannot enter at some positions, the shafts are out of angular alignment. To correct this condition, place shims under the motor feet. Always try to align the shaft as accurately as you can.

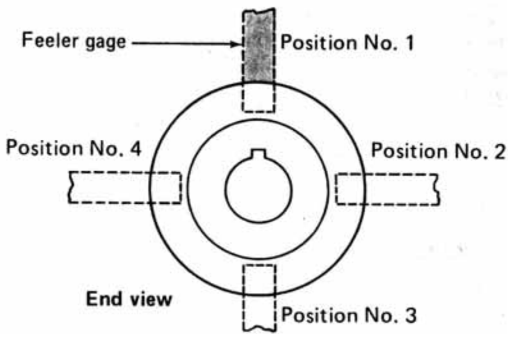

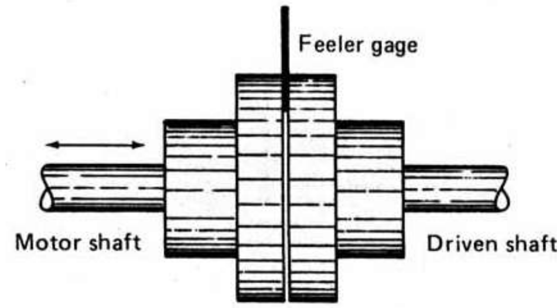

6.1.3 Alignment of Coupling Contour – Horizontal (bring them to same height)

There are two common methods on how to determine the misalignment in height:

- **The dial gauge method**
- **The straight edge method**

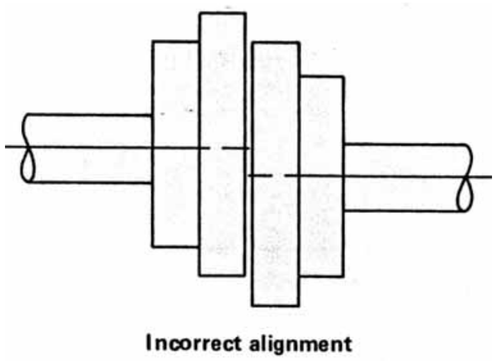

Dial Gauge Method –Horizontal Alignment

If the coupling installation requires more precise alignment of the shafts, then use precision instruments for the job. Mount the dial indicator on one of the coupling half's and place the point of the indicator in contact with the top of the other half. Manually turn the half on which the dial indicator is mounted to take four readings at points around the other coupling half. Use shims to raise the lower unit.

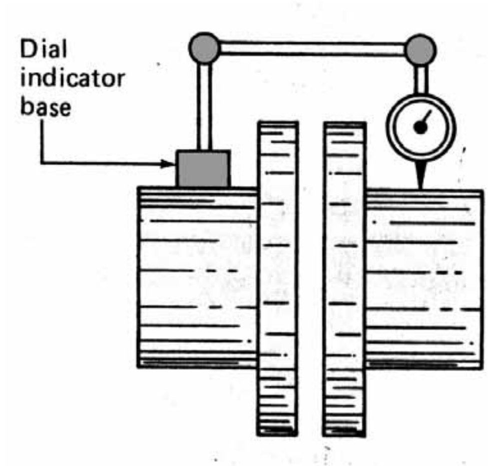

Straight Edge Method

In addition to checking the angular alignment of the shafts, it is necessary to make sure that they are horizontal aligned. To check this, place a straightedge across the tops of the coupling half. Adjust the height of the motor shaft as needed to bring the shafts into alignment.

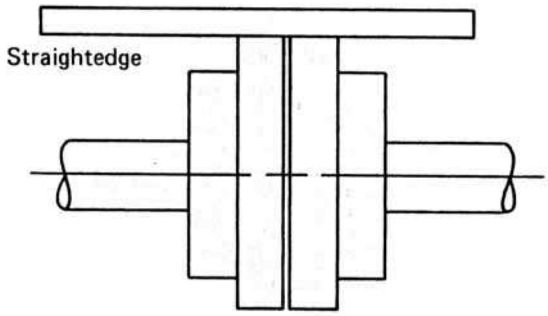

Proper parallel alignment

6.1.4 Alignment of Coupling Contours – Parallel (align them sideways)

In addition to checking the horizontal alignment of the shafts, it is necessary to make sure that they are sideways aligned. To check this, place a straightedge sideways of the coupling half. Adjust the motor.

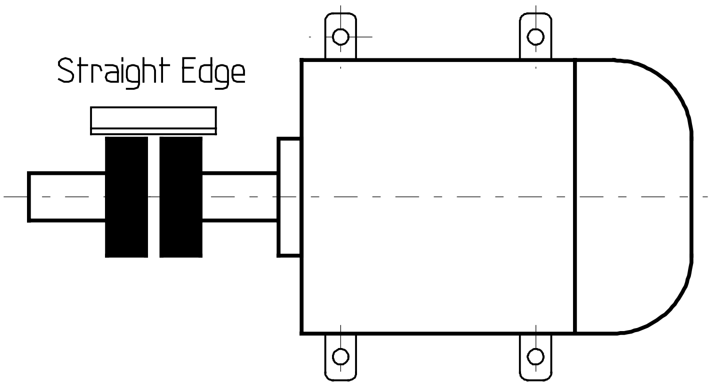

6.1.5 Adjusting the gap between the Coupling Half's

The gap between the faces of the two coupling half's is essential for the proper operation of the whole drive unit. The amount of gap required for the specific type of coupling is usually provided by the manufacturer.

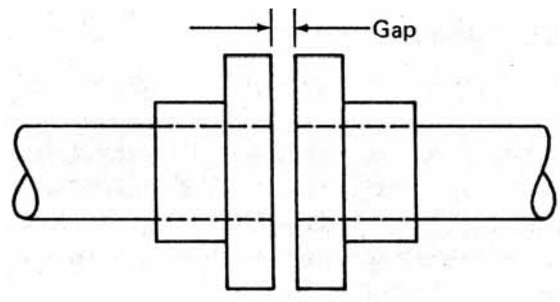

Sometimes it is necessary to check also the shaft against crook. The picture besides shows how to handle this method.

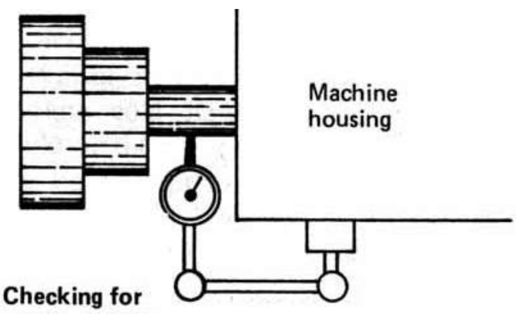

Checking for crooked shaft

Exercise - Steps of Coupling Alignment

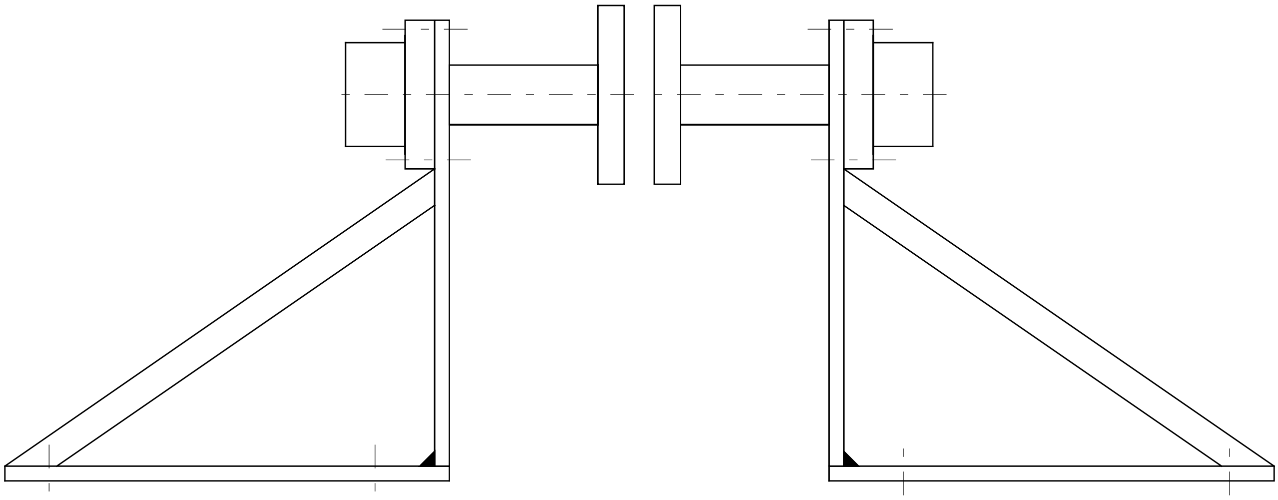

Case: Pump was removed for repair

1. Put motor and pump in place
2. Fix both of them (not too tight)
3. Check parallelism of coupling using either feeler gauge method or dial gauge method
4. Calculate the necessary shim sizes, using the calculation method
5. Remove or add shims at motor or pump
6. Check one by one all motor feet for leveling (clearance)
7. If necessary correct leveling of motor feet
8. Proceed with horizontal alignment of coupling
9. Remove or add shims at motor or pump
10. Adjust the gap of coupling
11. Radial (sideward) alignment of coupling, using the straight edge method
12. Tight all bolts
13. Final check of all alignments, using the dial gauge

7. Safety Precautions for the Maintenance of Mechanical Drives

Maintaining drives, like discussed in the chapters before (chain drive, belt drive, gear drive etc.), is under disregard of safety rules a dangerous procedure.

Comply with the following to avoid serious personal injury:

- Use always care to prevent injury
- Wear the personal protective equipment like protective clothing, safety goggles, safety shoes and when necessary safety gloves.
- Guards must be provided to cover the moving parts of mechanical drives
- Before starting to work on a mechanical drive, **STOP** the machine and **LOCK-OUT** the power. Let your fellow workers know that you are – or will be – working on it.
- Never strain yourself by lifting or shifting mechanical parts that are too heavy. Use proper lifting devices for handling heavy parts.
- Before starting a test-run clean up the workplace and remove all tools, containers, etc.
- Clean up all grease, solvent and lubricant spills. Wipe the area incl. the mechanical drive with couplings and the protection cover dry and clean.
- Before you start up the drive, make sure that all fasteners are tight and all guards are in place. Inform all the workers near the mechanical drive that you start the test-run.
- Stay at the beginning of the test-run near the power switch. In case of any unusual sound or vibration, switch off the drive immediately.

8. CALCULATION OF SPEED FOR V-BELT DRIVE AND GEAR DRIVE

8.1 Single V-Belt Drive

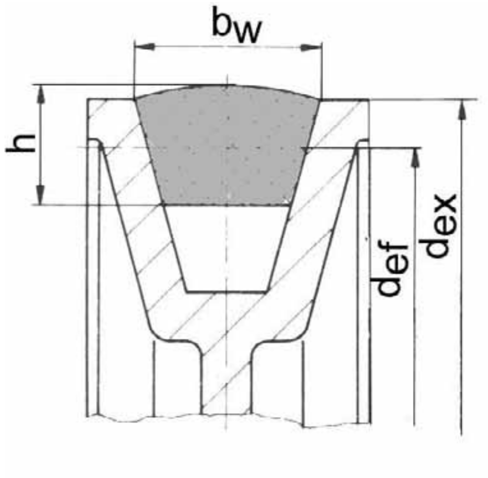

h = **belt height**
b_w = **upper belt width**
d_{ex} = **external diameter**
d_{ef} = **effective diameter**
n = **revolution per minute (rpm)**

Calculation of V-belt drives is done on the basis of the effective diameter of the pulley.

effective diameter = external diameter - 2 x belt height / 2

$$d_{ef} = d_{ex} - 2 \times h / 2$$

Since we have a driving pulley and a driven pulley we have to give them different formulary abbreviations. Driving pulley = d_{ef1} and driven pulley = d_{ef2}

driving d x n = driven d x n

$$d_{ef1} \times n_1 = d_{ef2} \times n_2$$

$$n_1 = \frac{d_{ef2} \times n_2}{d_{ef1}}$$

The transmission ration **(i)** is the ratio between the the input and output speeds.

$$i = \frac{n_1}{n_2} = \frac{def1}{def2}$$

Exercise in in Spindle Speed Calculation – Workshop Drill Press CDC

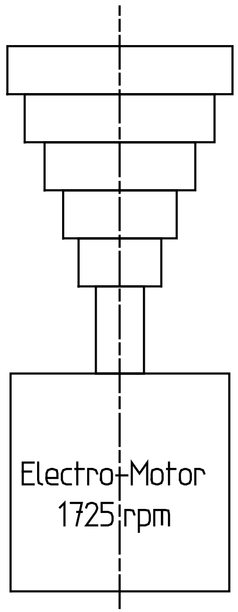

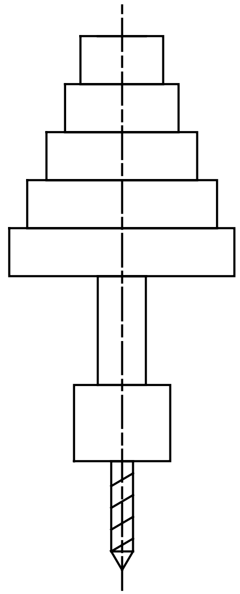

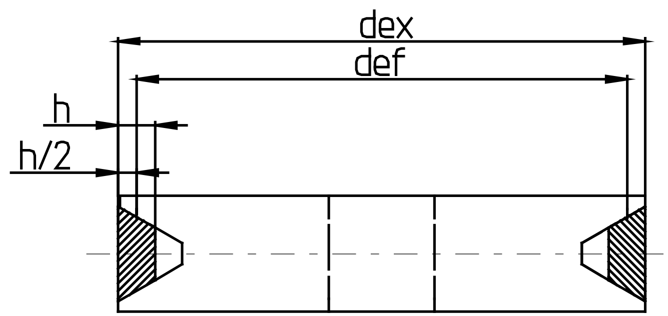

$$\text{Spindle Speed} = \frac{\text{Motor Speed x Pulley Diameter}_{ef1}}{\text{Pulley Diameter}_{ef2}}$$

	Drive Side		Driven Side		
Transmission Step	**Outside ∅ of pulley (d_{ex})**	**Effective ∅ of pulley (d_{ef}) $d_{ef} = d_{ex} - 2 \times h/2$**	**Outside ∅ of pulley (d_{ex})**	**Effective ∅ of pulley (d_{ef}) $d_{ef} = d_{ex} - 2 \times h/2$**	**Spindle Speed**
1					
2					
3					
4					
5					

8.2 Simple Gear Drive

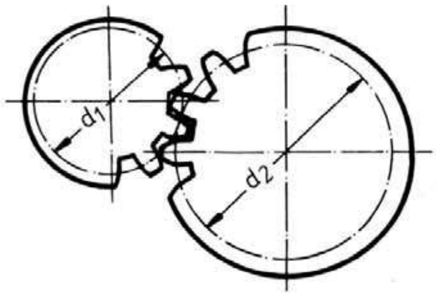

d	**=**	**pitch diameter**
n	**=**	**revolution per minute (rpm)**
z	**=**	**number of teeth**
i	**=**	**transmission ratio**

Since we have a driving gear and a driven gear we have to give them different formulary abbreviations.
Driving gear = $\mathbf{d_1}$ and driven gear = $\mathbf{d_2}$
Driving gear = $\mathbf{n_1}$ and driven gear = $\mathbf{n_2}$
Driving gear = $\mathbf{z_1}$ and driven gear = $\mathbf{z_2}$

Claculation of speed using the pitch diameters

$$\mathbf{d_1} \times \mathbf{n_1} = \mathbf{d_2} \times \mathbf{n_2}$$

$$\mathbf{n_2} = \frac{d_1 \times n_1}{d_2}$$

Claculation of speed using the number of teeth

$$\mathbf{z_1} \times \mathbf{n_1} = \mathbf{z_2} \times \mathbf{n_2}$$

$$\mathbf{n_2} = \frac{z_1 \ x \ n_1}{z_2}$$

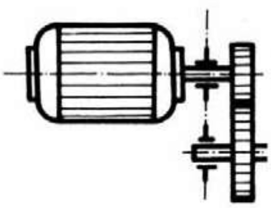

Ratio (i) calculation:

$$\mathbf{i} = \frac{\textbf{driving r.p.m.}}{\textbf{driven r.p.m.}} = \frac{\mathbf{n_1}}{\mathbf{n_2}} = \frac{\mathbf{d_2}}{\mathbf{d_1}} = \frac{\mathbf{z_2}}{\mathbf{z_1}}$$

Exercises in calculating simple Gear Drives

Calculation of electric hand drill

In a hand drill, the motor rpm of 3600 1/min is transmitted to the drill spindle via two gears with 8 teeth and 32 teeth. Calculate the rpm of the drill spindel.

Find:

Given:

Solution:

Calculation of ratio of bicycle drive

Calculate the transmission ratio between the pedal wheel with 48 teeth and a pinion with 15 teeth.

Find: Ratio **i**

Given:

Solution:

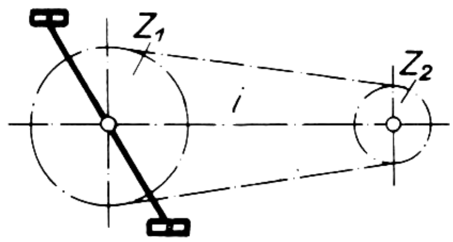

EXAMPLE OF A DETAILED MAINTENANCE CHART FOR A MILLING MACHINE

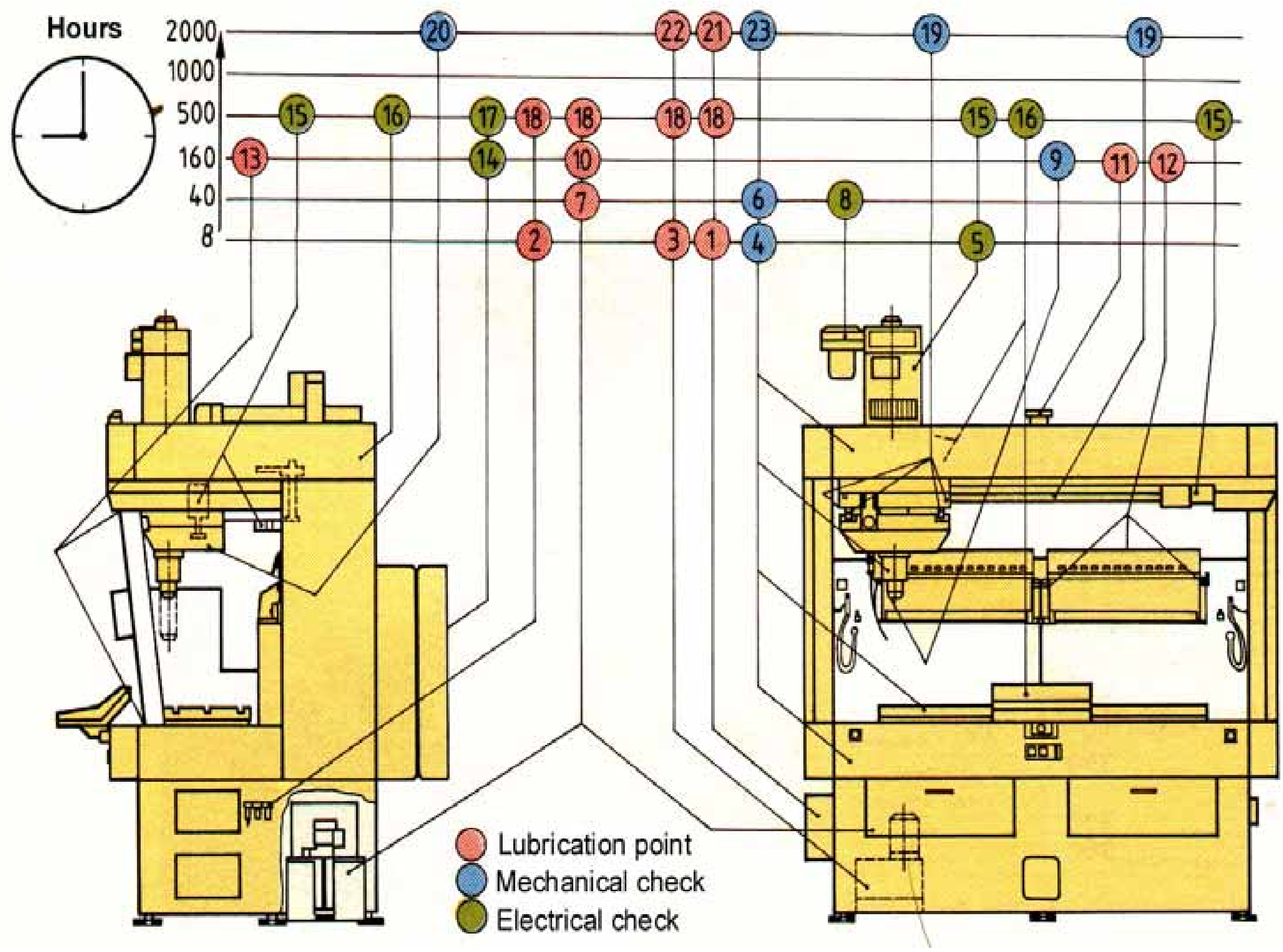

CLEANING MACHINE FOR MAINTENANCE DEPARTMENT

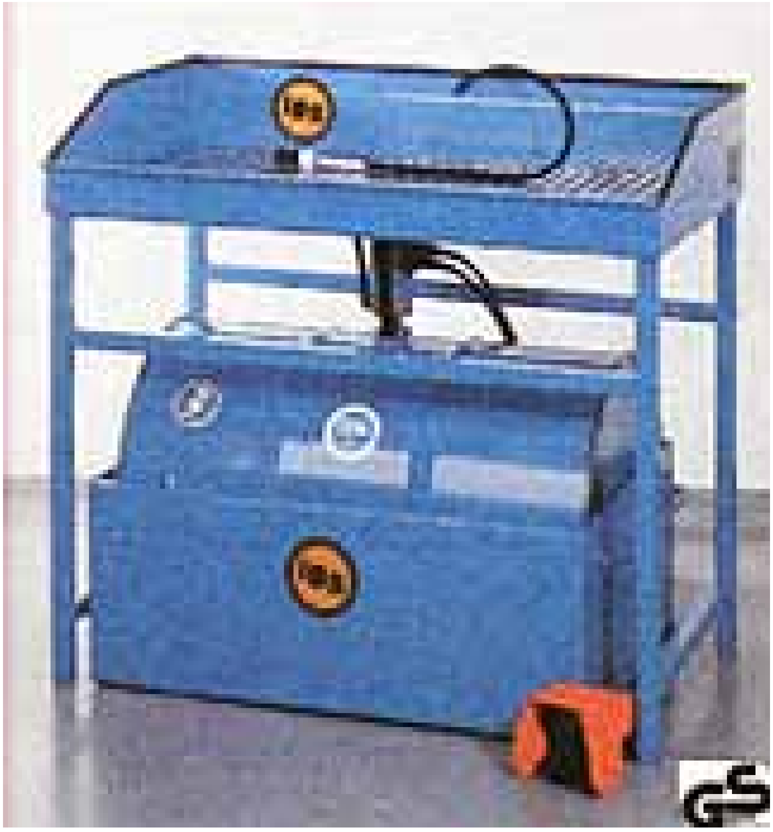

MAINTENANCE SYSTEM - IMPLEMENTATION KEY STEPS:

1. Number the equipment.
2. Create a file for each equipment
3. Gather data on the equipment (manuals).
4. Develop Preventive Maintenance task and daily routines.
5. Review existing maintenance service.
6. Implement a work order system.
7. Implement an inventory system for spare parts and consumables.
8. Develop a purchasing system that meets the needs of the maintenace department.
9. Train the management team on the process and its specific elements.
10. Communicate to the entire maintenance team the pending changes and their involvement in the process.
11. Train specific individuals such as the planner and inventory clerk.
12. Use the complete system on a small scale to test the process.
13. Modify the process as required.
14. Document the process.
15. Perform a skill's assessment of the work force.
16. Establish a training program to correct skills deficiencies.
17. Report final results to the Planrt Manager.
18. Establish a follow up audit in 6-12 months.

LASER BASED SHAFT ALIGNMENT TOOL

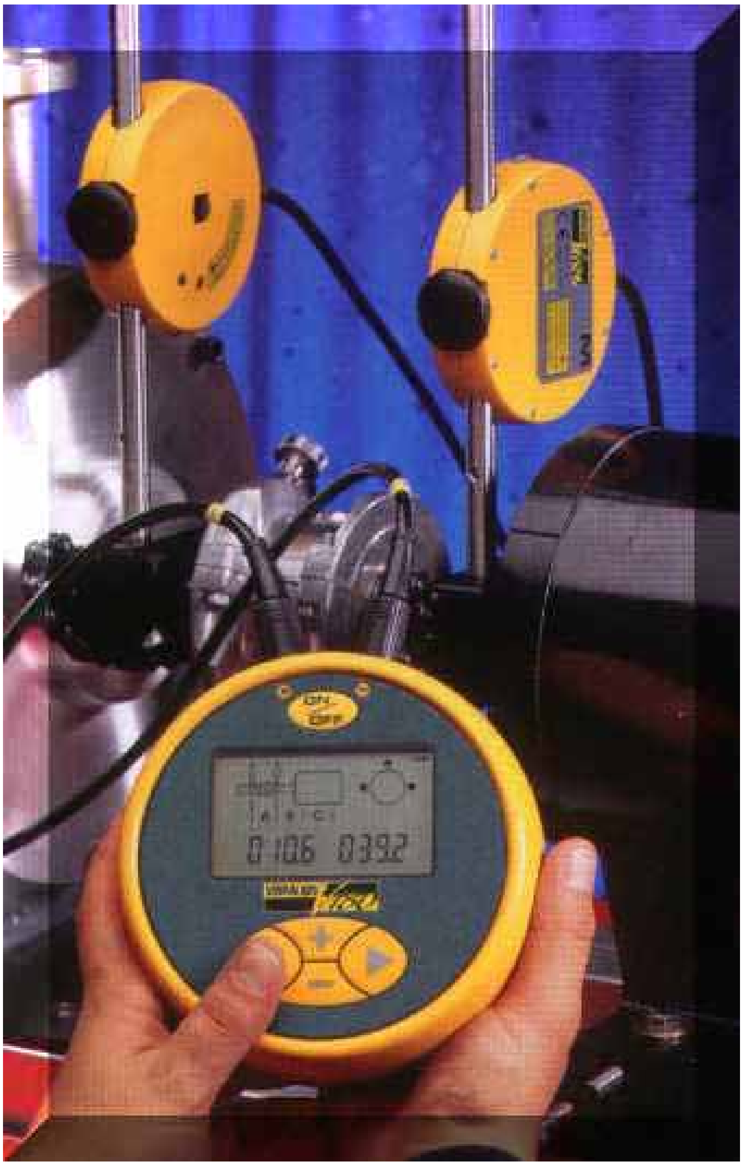

MANUAL SHAFT ALIGNMENT TOOLS

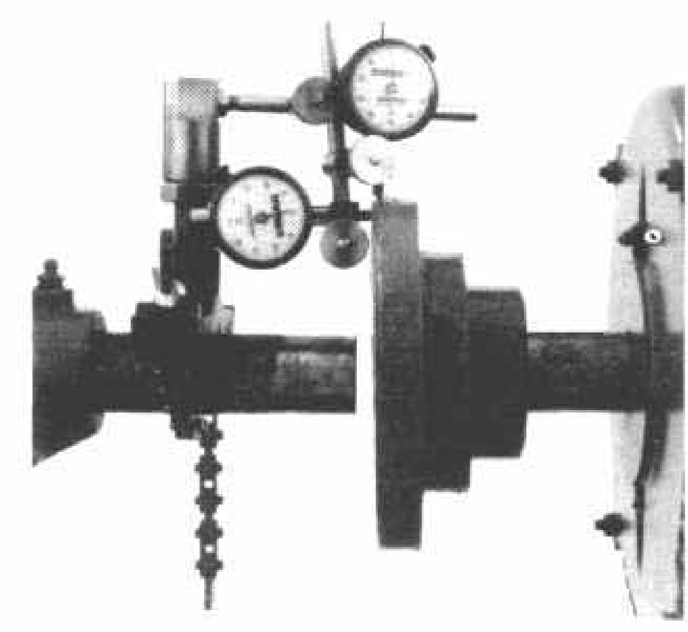

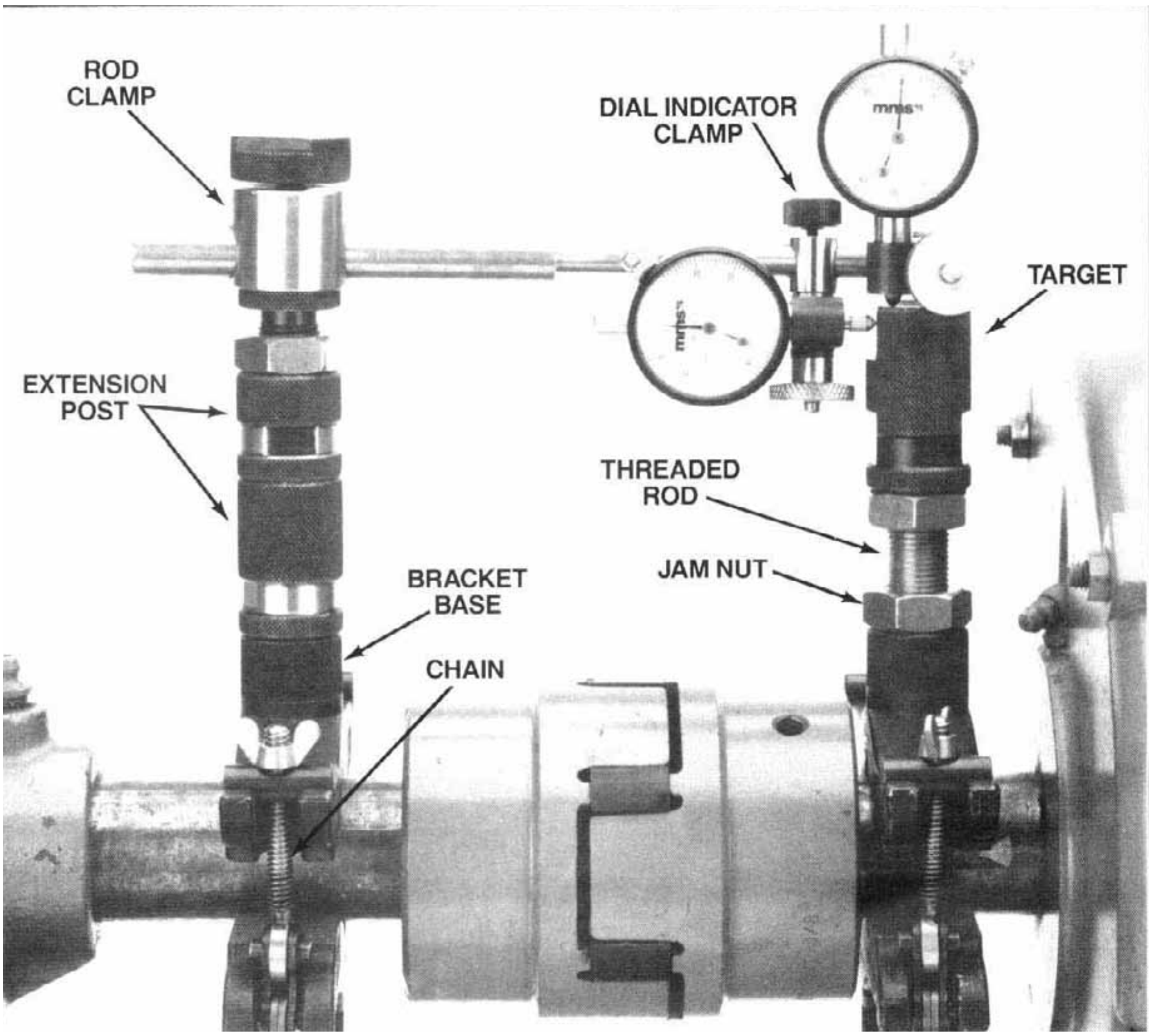

Maintenance Strategies – Output of Discussion Batch #41

Strategies	Advantages	Disadvantages	Use
Run to failure	• Cheap because small overhead cost	• Unplanned Downtime • Higher repair cost	• Simple & cheap machinery • Low value products
Preventive Maintenance	• Scheduled work • Less Downtime • Less repair cost	• Higher overhead cost • Long preparation time	• Complicated & expensive machinery • Bigger industrial plants • High value products
Predictive Maintenance	• Less downtime • Make use of lifetime span for equipment • Less repair cost	• High overhead cost • High equipment cost • Training cost for manpower • High salary for trained people	• Critical equipment • Expensive equipment • High value products • Bigger industrial plant
Planned Overhauling	• Less downtime during running period • Reconditioning of complete machine • Planning and scheduling in advance • Good preparation	• Loose of production time • More manpower through sub-contractual works • More workload to the planners	• Seasonal machinery • When low production or storage is full • Expensive critical equipment
Redundancy	• Less Downtime • Time to repair broken equipment • Less manpower	• Higher cost because of double equipment • Higher cost for installation • Spare machinery damage during storage for long period	• Very critical products or processes • Bigger industrial plants • Expensive and critical equipment

Minimizing Downtime at any Price?

Days of Downtime per Month vs Total Maintenance Cost

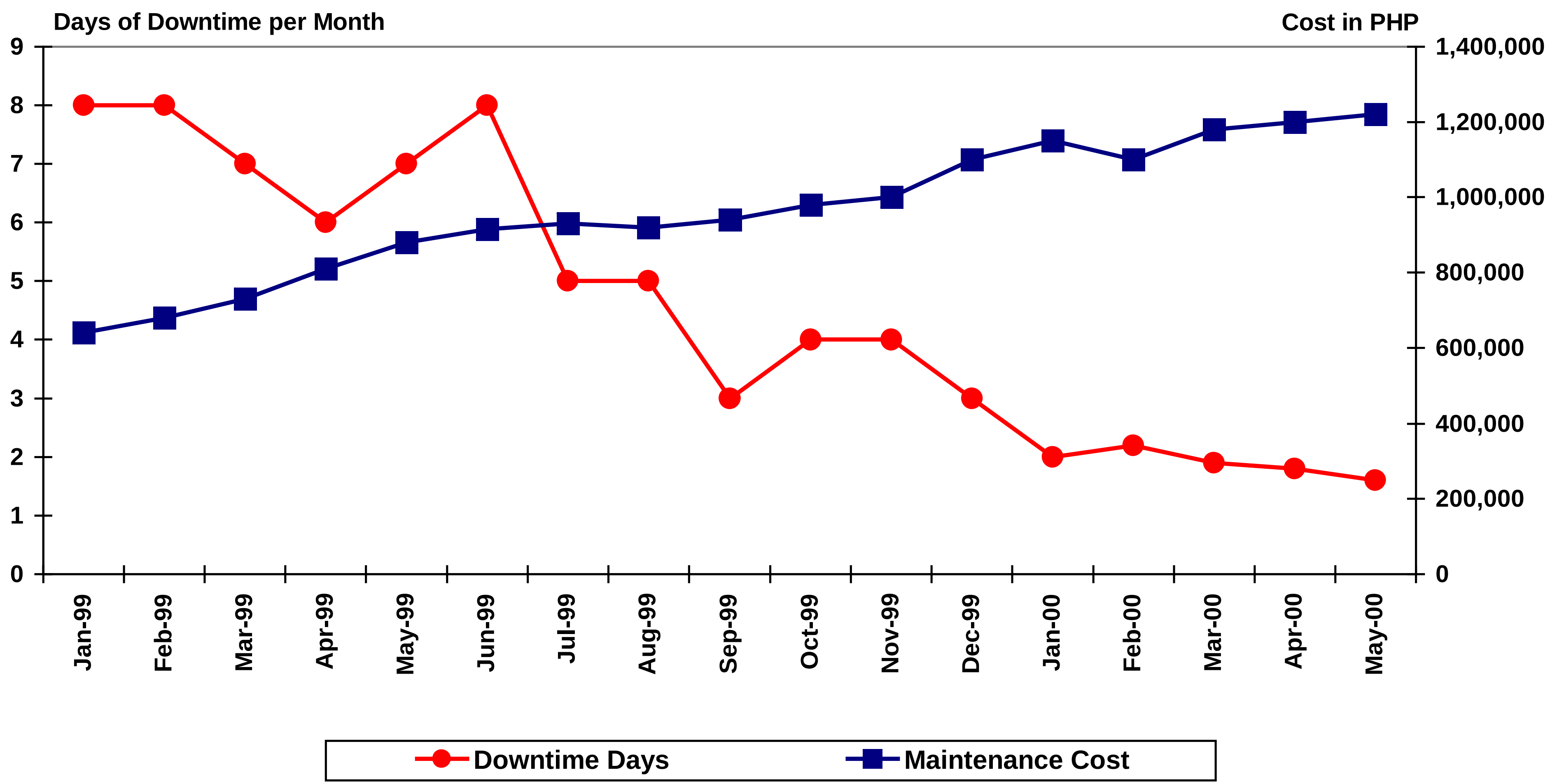

GLOSSARY

Unplanned Maintenance - any maintenance activity for which a pre-determined job procedure has not been documented, or for which all labor, materials, tools, and equipment required to carry out the task have been not been estimated, and their availability assured before commencement of the task.

Unscheduled Maintenance - any maintenance work that has not been included on an approved Maintenance Schedule prior to its commencement.

Predictive Maintenance - an equipment maintenance strategy based on measuring the condition of equipment in order to assess whether it will fail during some future period, and then taking appropriate action to avoid the consequences of that failure. The condition of equipment could be monitored using Condition Monitoring, Statistical Process Control techniques, by monitoring equipment performance, or through the use of the Human Senses. The terms Condition Based Maintenance, On-Condition Maintenance and Predictive Maintenance can be used interchangeably.

Vibration Analysis - the process of monitoring the condition of equipment, and the diagnosis of faults in equipment through the measurement and analysis of vibration within that equipment. Typically conducted through hand-held or permanently positioned accelerometers placed on key measurement points on the equipment. Commonly used on most large items of rotating equipment, such as turbines, centrifugal pumps, motors, gearboxes etc.

Work Order - The prime document used by the maintenance function to manage maintenance tasks. It may include such information as a description of the work required, the task priority, the job procedure to be followed, the parts, materials, tools and equipment required to complete the job, the labor hours, costs and materials consumed in completing the task, as well as key information on failure causes, what work was performed etc.

Work Request - The prime document raised by user departments requesting the initiation of a maintenance task. This is usually converted to a work order after the work request has been authorised for completion.

Tribology - the process of monitoring the condition of equipment through the analysis of properties of its lubricating and other oils. Typically conducted through the measurement of particulates in the oil, or the measurement of the chemical composition of the oil (Spectographic Oil Analysis). Commonly used for monitoring the condition of large gearboxes, engines and transformers, amongst other applications

Thermography - the process of monitoring the condition of equipment through the measurement and analysis of heat. Typically conducted through the use of infra-red cameras and associated software. Commonly used for monitoring the condition of high voltage insulators and electrical connections, as well as for monitoring the condition of refractory in furnaces and boilers, amongst other applications. Shutdown - that period of time when equipment is out of service. Shutdown Maintenance - Maintenance that can only be performed while equipment is shutdown

Run-to-Failure - No Scheduled Maintenance - an Equipment Maintenance Strategy, where no routine maintenance tasks are performed on the equipment. The only maintenance performed on the equipment is Corrective Maintenance, and then only after the equipment has suffered a failure. Also described as a No Scheduled Maintenance strategy.

Repair - any activity which returns the capability of an asset that has failed to a level of performance equal to, or greater than, that specified by its Functions, but not greater than its original maximum capability. An activity which increases the maximum capability of an asset is a modification.

Purchase Requisition - The prime document raised by user departments authorising the purchase of specific materials, parts, supplies, equipment or services from external suppliers.

Purchase Order - The prime document raised by an organisation, and issued to an external supplier, ordering specific materials, parts, supplies, equipment or services.

Maintenance Policy - a statement of principle used to guide Maintenance Management decision making.

Maintenance Schedule - a list of planned maintenance tasks to be performed during a given time period, together with the expected start times and durations of each of these tasks. Schedules can apply to different time periods (eg. Daily Schedule, Weekly Schedule etc.)

Maintenance Strategy - a long-term plan, covering all aspects of maintenance management which sets the direction for maintenance management, and contains firm action plans for achieving a desired future state for the maintenance function.

Failure - an item of equipment has suffered a failure when it is no longer capable of fulfilling one or more of its intended functions. Note that an item does not need to be completely unable to function to have suffered a failure. For example, a pump that is still operating, but is not capable of pumping the required flow rate, has failed. In Reliability Centered Maintenance terminology, a failure is often called a Functional Failure. Would you classify a planned equipment shutdown as a failure? Would you classify a routine equipment shutdown at shift change as a failure? Under this definition, the answer in the first case would be yes, but in the second case would be no. The justification for the inclusion of planned shutdowns as failures is that a failure, as defined, causes a disruption to the desired steady-state nature of the production process, and therefore should, ideally, be avoided.

Maintenance & Repair Module 1 – Course

Introductory Questions to the Trainees

The Trainer should ask this questions to get an overview about the knowledge and the work of the participants. He will be able to understand the structure of the company in terms of maintenance.

1. Profession and experience of trainees?
2. Did you attend trainings like this before?
3. Why does a company need maintenance personal?
   Because each machine can fail and break down. If all machines would be perfect, there would be no need for maintenance personal
4. What kind of machinery needs maintenance?
   All rotating machines like: Pumps, Gear-boxes, Exhaust fan, Compressor, Dryer, and Mixer. But also Pipelines, Pressure valves, boilers ……
5. What kind of maintenance jobs do you perform?
   Repair, Overhauling, Preventive Maintenance ……..
6. How is your daily work balanced (scheduled or unscheduled)
   Scheduled work should predominate the unskilled work.
7. How is your maintenance department organized?
   Manager, Planner, Supervisor
8. How is a maintenance order processed?
   Verbally or through, job order form. Is there a given time to finish the job?
9. What kind of maintenance strategy do you follow in your company?
   Important to give later some proposals how to improve.
10. Do you follow a maintenance schedule for the routine jobs?
    Important to give later some proposals how to improve.
11. Do you fill up a maintenance log for each machine?
    Important to give later some proposals how to improve.
12. Do you fill up a maintenance history log for each repair?
    Important to give later some proposals how to improve.
13. What kind of condition monitoring tools do you use?
    The 7 tools

List of Needed Ressources for “MIG/MAG Welding” Course

					Need to Order/Replace/Organize			
Resource	**Checked**	**Unit**	**Qty for 1 Trainee**	**Qty for 4 Trainees**	**Unit**	**Qty**	**Unit Price**	**Amount**
Teaching Aids								
Forms								
Consumables and Parts for Exercises								

					Need to Order/Replace/Organize			
Resource	**Checked**	**Unit**	**Qty for 1 Trainee**	**Qty for 4 Trainees**	**Unit**	**Qty**	**Unit Price**	**Amount**

MAINTENANCE & REPAIR MODULE 1 – FINAL KNOWLEDGE TEST

1. Which of the following statements about Maintenance is the most important one?

- ☐ a. Maintenance of industrial equipment is cheap.
- ☐ b. Maintenance should eliminate or reduce downtime.
- ☐ c. There is no need for skilled personnel in maintenance.
- ☐ d. Maintenance is not so important.

2. Name at least 3 different Maintenance Strategies.

____________________________________ _______________________________________

____________________________________ _______________________________________

3. What information does the Maintenance Log show?

- ☐ a. The cost of equipment.
- ☐ b. The order numbers of spare parts.
- ☐ c. The history of Condition Monitoring
- ☐ d. The preventive Maintenance Schedule.

4. What information does the Maintenance History show?

- ☐ a. The date of last oil check.
- ☐ b. The order numbers of spare parts.
- ☐ c. The length of belt drive.
- ☐ d. The history of all repair activities.

5. Which of the following statements about tensioning V-belts is true?

- ☐ a. Too little tension can damage bearing.
- ☐ b. Apply enough tension to prevent slipping.
- ☐ c. Only the trained experts from the manufacturer should tension belts.
- ☐ d. To little tension will change the center of pulley distance.

6. When do V-belts transmit power most efficiently?

- ☐ a. When the V-Belt sides contact the groove sides.
- ☐ b. When the top of the belt is higher than the pulley.
- ☐ c. When the bottom of the belt rests on the groove bottom.
- ☐ d. When the belt sides contact the bottom and the groove sides.

7. After a run-in period the belt should be ………………………..

8. The most common cause of chain-drive failure is improper or inadequate ………………..

9. A chain begins to ride higher and higher on the sprocket teeth when it becomes worn and

………………………

10. Which is the right lubrication method for very slow chain drives?

- ☐ a. Splash
- ☐ b. Manual
- ☐ c. Permanent
- ☐ d. Drip oiler

11. After how many hours of operation should you inspect a new chain drive?

- ☐ a. 24 hr
- ☐ b. 72 hr
- ☐ c. 120 hr
- ☐ d. 168 hr

12. Name at least one advantage and one disadvantage of chain drives

______________________________ ______________________________

______________________________ ______________________________

13. Name the 3 classifications of couplings

______________________________ ______________________________

____

14. What is not important for the coupling selection?

- ☐ a. The horsepower to be transmitted
- ☐ b. The operation speed
- ☐ c. The environmental temperature, which will affect the coupling
- ☐ d. The type and size of ball bearing used in the electric motor

15. If a gear drive is noisy during no-load testing, what should you do?

- ☐ a. Inspect the gear teeth
- ☐ b. Check the oil reservoir
- ☐ c. Inspect the shaft and the bearings
- ☐ d. No. a., b., and c.

16. Name 3 methods to align couplings

______________________________ ______________________________

____

17. Name 2 couplings, which allow longitude expansion of the shaft

____

____

INFO@MAINTENANCERESOURCES.COM

V-Belt Maintenance Video - $89.00 each
Roller Chain Maintenance Video - $89.00 each
Bushing Maintenance Video - $89.00 each
Shaft Coupling Maintenance Video - $89.00 each
Unmounted Bearing Maintenance Video - $89.00 each
Mounted Bearing Maintenance Video - $89.00 each

PROTOTYPE CORE CURRICULUM

Sector : Metal and Engineering Occupations
Occupational field : Plant Maintenance Mechanic
Level : First Level
Subject :
National Certificate : National Certificate II
Duration : 1Year (Part 1 and 2)
Duration Part 1 : 1 Semester = 18 weeks = 92 days
(1 day In-School/Center = 6 h , 1 day In-Firm = 8 h)

Course Content

Part 1 **Based on Knowledge Requirements of the Training Regulation for Plant Maintenance Mechanic**

Code: (TR)	Topics	Knowledge	Skills	
		Classroom	School-Shop	Industry
1.1	**Safety Precautions**	To be imparted during the entire subject		
1.2	**Blueprint Reading and Drawing**	**5 days**	**-**	**-**
1.3	**Shop Mathematics**	**10 days**	**-**	**-**
1.4	**Measurements and Inspection**	**2 days**	**3 days**	**-**
1.5	**Materials and Heat Treatment**	**2 days**	**-**	**-**
1.6	**Toolroom Machining**	**5 days**	**25 days**	**-**

Code: (TR)	Topics	Knowledge	Skills	
		Classroom	School-Shop	Industry
1.7	**Hand- and Power-operated Tools**	To be imparted during the entire subject		
1.8	**Hydraulics and Pneumatics**	**3 days**	**5 days**	**-**
1.9	**Mechanism and Machine Elements**	**5 days**	**-**	**-**
1.10	**Machine Repair/Overhaul**	-	**7 days**	-
1.11	**Preventive and Corrective Maintenance**	-	**4 days**	**-**
1.12	**Machine Reconditioning**	-	**4 days**	**-**
	Industry Immersion	**-**	**-**	**12 days**
Summary		**32 days**	**48 days**	**12 days**
		80 days (480 h)		**12days** (96 h)
Total		**92 days**		

Sample C2: Prototype Core Curriculum
for

Plant Maintenance Mechanic (First Level)
Part 2 Skills Requirements

PROTOTYPE CORE CURRICULUM

Sector : Metal and Engineering Occupations
Occupational field : Plant Maintenance Mechanic
Level : First Level
Subject :
National Certificate : National Certificate II
Duration : 1 Year (Part 1 and 2)
Duration Part 2 : 1 Semester plus Semestral Break = 28 weeks = 168 days
(1 day In-School/Center = 8 h , 1 day In-Firm = 8 h)

Course Content

Part 2 **Based on Skills Requirements of the Training Regulation for Plant Maintenance Mechanic**

According to the DACUM Research Chart

Code: (TR)	Topics	Knowledge	Skills	
		Classroom	School-Shop	Industry
A	**Performing Preventive Maintenance**	**1 day**	**2 days**	**30 days**
B	**Performing Corrective Maintenance**	-	**2 days**	**30 days**
C	**Repairing and maintaining fluid system**	**1 day**	**3 days**	**30 days**
E	**Fabricating simple parts**	**1 day**	**5 days**	**40 days**
F	**Fitting parts into assembly**	**1 day**	**2 days**	**20 days**
	Summary	**4 days**	**14 days**	**150 days**
		18 days (144 h)		**150 days** (1200 h)
		168 days		

Code: (TR)	Topics	Knowledge	Skills	
		Classroom	School-Shop	Industry
	Total Summary **Part 1 (Knowledge Requirements and Industry Immersion)** **Part 2 (Skills Requirements)**	**80 days** **18 days**		**12 days** **150 days**
		98 days		**162 days**
		260 days		

TESDA,NITVET,CTAD, Schwarz 11/23/1999

Drafted by Workgroup:
Sector: **Metal and Engineering Occupations**
Occupational Field: Plant Maintenance Mechanic
Level: Class B

Subject:
National Certificate: NC 2
Duration Part 1: 1 Semester = 18 weeks = 92 days
Total Duration: 1 Year (Part 1 and 2)

Course Content

Part 1. Based on Knowledge Requirements of the Training Regulation for Plant Maintenance Mechanic

Training Plan for Schools / Centers and for Industry Immersion for Plant Maintenance Mechanic

Knowledge Requirements	Objectives	Contents	Learning Hours/ Venue			Didactical Remarks (Recommendations)
			C	**SS**	**IN**	
1.1 **Safety Precautions**	To interpret safety precautions and analyze the safety conditions of the working place	1.1.1 Safe handling of tools, equipment and materials 1.1.2 Protective clothing and equipment 1.1.3 Cleanliness and tidiness 1.1.4 First-aid Treatment 1.1.5 Fire extinguisher 1.1.6 Safety and health regulation	To be imparted during the entire subject			Regular meeting and exercises. Information material. Seminars and learning sessions

C = Classroom SS = School shop IN = Industry

Knowledge Requirements	Objectives	Contents	Learning Hours/ Venue			Didactical Remarks (Recommendations)
			C	**SS**	**IN**	
1.2 **Blueprint Reading and Drawing**	To explain the information given in technical drawings and apply this information for different manufacturing processes. To translate the abstract in formation into practice..		**30**			
		2.2.1 **The working Drawing** : requirements of an explicit working drawing, manufacturing speci-fication to ensure correct processing.	6			Lecture
		1.2.2 **ISO Limits and Fits**: general and shafts; commonly used holes and shafts; tolerances grades; commonly used fits; use of table	4			Tutorial
		1.2.3 **The reference surface**: datum featuring used measuring and setting-up	4			Practical Exercises
		1.2.4 **Machining accuracy**: dimension chain and classification; rules in dimensional relationship	4			
		1.2.5 **Geometrical Tolerances**: Conventional representation of geometric tolerances especially to straightness, flatness, parallelism and locational tolerances	4			

C = Classroom SS = School shop IN = Industry

Knowledge Requirements	Objectives	Contents	Learning Hours/ Venue			Didactical Remarks (Recommendations)
			C	**SS**	**IN**	
		1.2.6 **Surface Finish**: Definition of terms; conventional representation specification	**4**			
		1.2.7 **Graphs**: Use and interpretation; making graphs of different types, Cartesian, polar and logarithmic	4			

Knowledge Requirements	Objectives	Contents	Learning Hours/ Venue			Didactical Remarks (Recommendations)
			C	**SS**	**IN**	
1.3 **Shop Mathematics**	To demonstrate basic mathematical operations and solve related workshop problems.		**60**			Self-learning programs Problem-solving teamwork
		1.3.1 Average, percentage, ratio proportion	4			Evaluation and assessment instruments
		1.3.2 Manipulation of formulas, areas and plan figure, volumes and weight of common regular solids	12			Lecture
		1.3.3 Geometrical properties of a circle	4			
		1.3.4 Simple trigonometric functions and application	16			
		1.3.5 Pythagorean theorem	12			
		1.3.6 Workshop problem in layout, measuring, setting-up and machining	12			

C = Classroom SS = School shop IN = Industry

Knowledge Requirements	Objectives	Contents	Learning Hours/ Venue			Didactical Remarks (Recommendations)
			C	**SS**	**IN**	
1.4 **Measure-ments and Inspection**	To list measuring tools and distinguish the application in different operational areas.		**12**	**18**		Lecture Practical exercises
		1.4.1 **Tools of measuring**: The reference gauge, the measuring tools and comparators	4	6		Instructional materials
		1.4.1.1Measuring Tools: Use, care and calibration of vernier calipers, micrometers, dials, indicators, special measuring tools, special applications in measuring angles, tapers, center distances, bore, etc.	8	12		Evaluation assessment instruments

Knowledge Requirements	Objectives	Contents	Learning Hours/ Venue			Didactical Remarks (Recommendations)
			C	**SS**	**IN**	
1.5 **Materials and Heat Treatment**	To classify the physical properties of metals and distinguish heat treatment operations and procedures needed to fabricate simple parts.		**12**			Lecture
		1.5.1 Tool Components	4			Instructional materials
		1.5.1.1 Physical properties of tool components for cutting and shearing, drawing, hot pressing tool, extrusion tools dies sinking tools: - Low melting alloys - Cast iron, high grade - Carbon steel	2			Evaluation and assessment instruments Company visit
		1.5.2 Heat treatment operations	2			
		1.5.2.1 The procedure followed in: - Hardening - Tempering - Flame hardening	2			
		1.5.2.2 Heat treatment equipment and control	2			

C = Classroom SS = School shop IN = Industry

Knowledge Requirements	Objectives	Contents	Learning Hours/ Venue			Didactical Remarks (Recommendations)
			C	**SS**	**IN**	
1.6 **Toolroom Machining**	To identify and explain parts and functions and operating procedures of various machine tool.		**30**	**150**		Lecture
		1.6.1 **Materials Preparations**: machines used for preparation of materials: power hacksaw, band saw, abrasive cutters, gas cutting	2	2		Practical exercises Instructional materials
		1.6.2 **Marking and Layout**: The manual method of location of holes and outlines	2	4		Evaluation and assessment instruments
		1.6.3 **Turning**: The machine tools needed, work holding devices, tools and attachment - Safety precaution - Spindle speeds and feed rate for different materials and tools - Turning faults and correction	8	42		Company visit Trainer and simulators
		1.6.4 **Milling**: Machine tool used, work holding devices, tools and attachment used: - Safety precaution - Spindle speeds and feed rate for different materials and tools - Work holding devices - Milling computations	8	42		

C = Classroom SS = School shop IN = Industry

Knowledge Requirements	Objectives	Contents	Learning Hours/ Venue			Didactical Remarks (Recommendations)
			C	**SS**	**IN**	
		1.6.5 **Grinding**: - Safety precautions - Selection of grinding wheel - Grinding wheel specifications - Work holding devices - Grinding operations involving surface grinding	6	18		
		1.6.6 **Bench work operations safety, tools, work holding devices for**: - Filing - Scraping - Drilling/counter boring - Tapping	4	42		

Knowledge Requirements	Objectives	Contents	Learning Hours/ Venue			Didactical Remarks (Recommendations)
			C	**SS**	**IN**	
1.7 **Hand- and Power-operated Tools**	To classify types of hand tools and explain their uses..		To be imparted during the entire subject			
		1.7.1 Types and uses of hand tools (wrenches, files, pliers, pullers, screw drivers, punchers, hack saws and hammers)				Lecture Instructional materials Evaluation and assessment instruments

C = Classroom SS = School shop IN = Industry

Knowledge Requirements	Objectives	Contents	Learning Hours/ Venue			Didactical Remarks (Recommendations)
			C	**SS**	**IN**	
1.8 **Hydraulics and Pneumatics**	To identify symbols and controls used in fluid system, and apply the basic fluid principles necessary to repair and maintain fluid system.		**18**	**30**		Lecture
		1.8.1 Knowledge of the symbols used in hydraulic and pneumatic diagrams	12	16		Instructional materials Practical exercises
		1.8.2 Types of control valves and application	2	6		Trainers/simulators Evaluation and assessment instruments
		1.8.3 Basic fluid principles	2	4		
		1.8.4 Uses of filters and strainers	2	4		

C = Classroom SS = School shop IN = Industry

Knowledge Requirements	Objectives	Contents	Learning Hours/ Venue			Didactical Remarks (Recommendations)
			C	**SS**	**IN**	
1.9 **Mechanism and Machine Elements**	To Identify common machine parts and their uses, and explain its installing procedures.		**30**			Lecture
		1.9.1 Identification of common machine parts	4			Instructional materials
		1.9.2 Kinds of bearings and their uses	8			Evaluation and assessment instruments
		1.9.3 Storage, cleaning and lubrication of bearings	4			
		1.9.4 Identification of different kinds of scales, packings and gaskets	4			
		1.9.5 Procedure in installing of belts, couplings and bearings	8			
		1.9.6 Relation of machine parts with others	2			

C = Classroom SS = School shop IN = Industry

Knowledge Requirements	Objectives	Contents	Learning Hours/ Venue			Didactical Remarks (Recommendations)
			C	**SS**	**IN**	
1.10 **Machine Repair/** **Overhaul**	To identify machine parts and functions and explain dismantling and assembling procedures.			**42**		Lecture
	To diagnose common machine faults.	1.10.1 Function of machine elements		4		Instructional materials Trainer/simulators
		1.10.2 Function of machine parts		4		Practical exercises
		1.10.3 Steps and procedures in dismantling and assembling of standard parts		4		Evaluation and assessment instruments
		1.10.4 Common machine faults		6		
		1.10.5 **Electric arc and gas welding**		24		

C = Classroom SS = School shop IN = Industry

Knowledge Requirements	Objectives	Contents	Learning Hours/ Venue			Didactical Remarks (Recommendations)
			C	**SS**	**IN**	
1.11 **Preventive and Corrective Maintenance**	To identify machine parts that requires lubrication and explain lubrication procedures and scheduling.			**24**		Lecture
		1.11.1 Lubricating procedures for machines like shaper, drilling, lathe, milling, boring and grinding machine		12		Instructional materials Practical exercises
		1.11.2 Frequency for changing of oil of shop equipment/machine tools		6		Evaluation and assessment instruments
		1.11.3 Identification of machine parts requiring lubrication		6		Company visit

C = Classroom SS = School shop IN = Industry

Knowledge Requirements	Objectives	Contents	Learning Hours/ Venue			Didactical Remarks (Recommendations)
			C	**SS**	**IN**	
1.12 **Machine Reconditio-ning**	To determine steps and procedures in setting-up parts, in accordance with machine metrology.	1.12.2 Machine tool metrology 1.12.3 Knowledge of transporting equipment 1.12.5 Steps and procedures in setting-up parts		**24** 12 4 8		Lecture Instructional materials Trainer/simulators Practical exercises Evaluation and assessment instruments
2.1 Industry Immersion	To join in selected firms for familiarization and job induction of possible company assignment				**96**	

Summary	**192**	**288**	**96**
	480		**96**
Total	**576**		

C = Classroom SS = School shop IN = Industry

Sector: **Metal and Engineering Occupations**
Occupational Field: Plant Maintenance Mechanic
Level: Class B

Subject:
National Certificate: NC 2
Duration Part 2: 1 Sem. (18 weeks) + Sem. Break (10 weeks)
Total Duration: 1 Year (Part 1 and 2)

Course Content

Part 2. Based on Skills Requirements of the Training Regulation for Plant Maintenance Mechanic
(According to the DACUM Research Chart)

Training Plan for Schools / Centers and Industry for Plant Maintenance Mechanic

Skills Requirements	Objectives	Tasks	Learning Hours/ Venue			Didactical Remarks (Recommendations)
			C	**SS**	**IN**	
A **Perform Preventive Maintenance**	To inspect and maintain various machines/equipment in accordance with manufacturers specifications and preventive maintenance scheduking.		**8**	**16**	**240**	Lecture Instructional materials
		A-2 Lubricate machines		20	24	Practical exercises
		A-3 Inspect/maintain V-belt drive	2	2	40	Competency assessment instruments
		A-4 Inspect/maintain chain and sprocket drives	2	2	40	Industry immersion
		A-8 Adjust gibs of slide ways		2	16	Company visit

C = Classroom SS = School shop IN = Industry

Note: ***Didactical remarks are recommended to all competencies.***

Skills Requirements	Objectives	Tasks	Learning Hours/ Venue			Didactical Remarks (Recommendations)
			C	**SS**	**IN**	
		A-9 Inspect/maintain drive coupling	2	2	40	
		A-13 Lubricate seal faces		2	16	
		A-14 Participate in safety training program		2	24	
		A-15 Orient OJT trainees/operators on safety and maintenance practices	2		24	
		A-16 Perform housekeeping		2	16	

C = Classroom SS = School shop IN = Industry

Skills Requirements	Objectives	Tasks	Learning Hours/ Venue			Didactical Remarks (Recommendations)
			C	**SS**	**IN**	
B **Perform Corrective Maintenance**	To remove and install specific spare parts in accordance with manufacturers specifications and machine setting and tolerances.			**16**	**240**	
		B-2 (A) Remove and install plain bearing (bushes and sleeves)		8	120	
		B-4 (A) Remove and install roller bearing		8	120	

C = Classroom SS = School shop IN = Industry

Skills Requirements	Objectives	Tasks	Learning Hours/ Venue			Didactical Remarks (Recommendations)
			C	**SS**	**IN**	
C **Repair and maintain fluid system**	To describe the functions of hydraulic systems.		**8**	**24**	**240**	
	To inspect and replace hydraulic lines and pipping systems.	C-1 (A) Inspect a hydraulic system	8	8	80	
		C-9 Replace hydraulic gasket and seals		2	8	
		C-11 Repair/replace hydraulic lines		4	80	
		C-12 Replace damaged/faulty lines/fittings		4	24	
		C-16 Install and replace a steel piping system		4	40	
		C-20 Install plastic tube to machine		2	8	

C = Classroom SS = School shop IN = Industry

Skills Requirements	Objectives	Tasks	Learning Hours/ Venue			Didactical Remarks (Recommendations)
			C	**SS**	**IN**	
E			**8**	**40**	**320**	
Fabricate simple parts	To demonstrate skills on operating various industrial tools and machine/equipment.					
		E-1 Cut metal stock with hand hacksaw			4	
		E-2 Cut metal stock with hand chisel			4	
		E-3 File workpiece			16	
		E-4 Mark workpiece		2	4	
		E-5 Drill holes with portable drill		2	4	
		E-6 Drill holes to size with drill press		2	8	
		E-7 Counterbore holes to depth		2	8	

C = Classroom SS = School shop IN = Industry

Skills Requirements	Objectives	Tasks	Learning Hours/ Venue			Didactical Remarks (Recommendations)
			C	**SS**	**IN**	
		E-8 Countersink holes		2	4	
		E-9 Spot-face hole		2	4	
		E-12 Cut internal thread with hand taps		2	8	
		E-13 Cut thread with dies		2	8	
		E-21 (A) Gas weld ferrous metals	2	4	40	
		E-25 Arc-weld ferrous metals	2	4	40	
		E-27 Harden metals	2	4	8	
		E-28 Temper metals	2	2	4	

C = Classroom SS = School shop IN = Industry

Skills Requirements	Objectives	Tasks	Learning Hours/ Venue			Didactical Remarks (Recommendations)
			C	**SS**	**IN**	
		E-29 Turn workpiece		4	40	
		E-30 Face workpiece		2	40	
		E-32 (A) Mill workpiece square		4	80	

Skills Requirements	Objectives	Tasks	Learning Hours/ Venue			Didactical Remarks (Recommendations)
			C	**SS**	**IN**	
F **Fit parts into assembly**	To fit and assemble parts with specified connectors in accordance with manufacturers specifications and mechanical safety.		**8**	**16**	**160**	
		F-2 Bolt parts		2	16	
		F-3 Dowel parts		2	16	
		F-4 Pin parts to a shaft		2	16	
		F-6 Fit/extract wheel	2	2	24	
		F-7 Fit parallel and tapered keys	2	2	16	
		F-8 Fit/extract bearing	2	4	40	
		F-13 Bend pipes	2	2	32	

Summary	**32**	**112**	**1200**
	144		**1200**
Total	**1344**		

C = Classroom SS = School shop IN = Industry

Form 1 Dualized Core Curriculum Knowledge Requirements and Industry Immersion

PROTOTYPE **CORE CURRICULUM**

Sector :
Occupational field :
Level :
Subject :
National Certificate :
Duration :
Duration Part 1 :

Course Content

Part 1 **Based on Knowledge Requirements of ……………………………………**

Code: (TR)	Topics	Knowledge	Skills	
		Classroom	School-Shop	Industry
				-
				-
				-
				-
				-
				-

Code: (TR)	Topics	Knowledge	Skills	
		Classroom	School-Shop	Industry
				-
				-
				-
				-
				-
				-
	Industry Immersion	**-**	**-**	
Summary		**….. days**	**….. days**	**…. days**
		…. days (…. h)		**…. days** (…. h)
Total		**…. days**		

CTAD, Schwarz 11/23/1999

PROTOTYPE **CORE CURRICULUM**

Sector :
Occupational field :
Level :
Subject :
National Certificate :
Duration :
Duration Part 2 :

Course Content

Part 2 **Based on Skills Requirements of …………………………………..**
(According to the DACUM Research Chart ?)

Code: (TR)	Duties	Knowledge	Skills	
		Classroom	School-Shop	Industry

Code: (TR)	Duties	Knowledge	Skills	
		Classroom	School-Shop	Industry
	Summary	**…. days**	**…. days**	**…. days**
		…. days (…. h)		**…. days** (…. h)
		…. days		

Code: (TR)	Topics/Duties	Knowledge	Skills	
		Classroom	School-Shop	Industry
	Total Summary **Part 1 (Knowledge Requirements and Industry Immersion)** **Part 2 (Skills Requirements)**	**…. days** **…. days**		**…. days** **…. days**
		…. days		**…. days**
		…. days		

Drafted by Workgroup:		Subject:	
Sector:		National Certificate:	
Occupational Field:		Duration Part 1:	
Level:		Total Duration:	

Course Content

Part 1. Based on Knowledge Requirements of the ……………………………………………………………….

Training Plan for Schools / Centers for Plant Maintenance Mechanic

Knowledge Requirements	Objectives	Contents	Learning Hours/ Venue			Didactical Remarks (Recommendations)
			C	**SS**	**IN**	

C = Classroom SS = School shop IN = Industry

Knowledge Requirements	Objectives	Contents	Learning Hours/ Venue			Didactical Remarks (Recommendations)
			C	**SS**	**IN**	

C = Classroom SS = School shop IN = Industry

Knowledge Requirements	Objectives	Contents	Learning Hours/ Venue			Didactical Remarks (Recommendations)
			C	**SS**	**IN**	

Summary			
Total			

C = Classroom SS = School shop IN = Industry

Drafted by Workgroup:		Subject:	
Sector:		National Certificate:	
Occupational Field:		Duration Part 1:	
Level:		Total Duration:	

Course Content

Part 2. Based on Skills Requirements of the ……………………………………………………………………

Training Plan for Schools / Centers for Plant Maintenance Mechanic

Skills Requirements	Objectives	Tasks	Learning Hours/ Venue			Didactical Remarks (Recommendations)
			C	**SS**	**IN**	

C = Classroom SS = School shop IN = Industry

Skills Requirements	Objectives	Tasks	Learning Hours/ Venue			Didactical Remarks (Recommendations)
			C	**SS**	**IN**	

C = Classroom SS = School shop IN = Industry

Skills Requirements	Objectives	Tasks	Learning Hours/ Venue			Didactical Remarks (Recommendations)
			C	**SS**	**IN**	

Summary			
Total			

C = Classroom SS = School shop IN = Industry

PLANT MAINTENANCE MECHANICS

OCCUPATIONAL SKILLS STANDARDS
(Part of the Training Regulation)

- **Introduction**
- **General Principles**
- **Job Description**
- **Index of Knowledge Requirements**
- **Index of Skills Requirements**
- **DACUM Research Chart for Plant Maintenance Mechanics**

OCCUPATIONAL SKILLS STANDARD

PLAN MAINTENANCE MECHANICS

INTRODUCTION

This Occupational Skills Standard defines the MINIMUM required stock of knowledge and skills a tradesman is supposed to possess to qualify as a PLANT MAINTENANCE MECHANIC. A tradesman is granted a certificate of proficiency (national skills certificate) under this occupational title once he passes the Competency Assessment.

This Occupational Skills Standard is herein formulated and developed for any, and/or all of the following purposes:

1. To upgrade the level of skill of workers in the METALS and ENGINEERING INDUSTRY, with the end in view of coming up with quality products/service, optimal use of equipment/tools/materials and increased productivity.

2. To provide employers with a structural basis in the preparation of job specification necessary for salary and /or wage administration.

3. To enhance the development of human resources through a precise assessment of skilled manpower in the Metals and Engineering Industry at large.

4. To serve as a basis in the establishment of Testing and Certification System, which machinery can be used for setting up of a classified pool of Plant Maintenance Mechanics ready to service both domestic and overseas requirements.

5. To facilitate the setting up of a machinery for determination of appropriate and adequate remuneration and the implementation of “equal work ,equal pay” .

6. Finally, to enhance the government’s desire to professionalize the skilled worker for which role the Technical Education and Skills Development Authority was established.

GENERAL PRINCIPLES

1. Classification

1.1 This Trade Skills Standard classifies PLANT MAINTENANCE MECHANIC into two two (2) classes: Class B and Class A (the higher).

1.2 Candidates who wish to be certified for their competency as PLANT MAINTENANCE MECHANIC will be required to show by written examination and by practical demonstration that they are in possession of the knowledge and skills required by the standard.

1.3 Candidates who passed the trade test will be issued a certificate bearing their names and photograph and shall be listed in the National Registry of Certified Skilled Workers in the Philippines.

2. Entry Requirements

2.1 Candidates for certification as PLANT MAINTENANCE MECHANIC class B must:

2.1.1 Have had one year work experience as Plant Maintenance Mechanic; or

2.1.2 Have completed a short intensive training in Plant Maintenance Mechanic conducted by Technical Education and Skills Development Authority (TESDA) , or any certified industrial/training institution; or equivalent course requiring a minimum of 720 hours of practical training recognized by TESDA followed by one (1) year working experience as a Plant Maintenance Mechanic, or

2.1.3 Have completed a primary apprenticeship training approved by the Department of Labor and Employment, or a appropriate training which equates to a short intensive course as Plant Maintenance Mechanic.

2.2 Candidate for certification for Plant Maintenance Mechanic Class A must:

2.2.1 Have had one year relevant working experience as Plant Maintenance Mechanic Class B or,

2.2.2 Have completed an intensive advanced training course in Plant Maintenance Mechanic conducted by TESDA or any certified industrial/training institution, or

2.2.3 Have had at least four (4) years working experience as Plant Maintenance Mechanic.

3. Definition of Terms

For the purpose of this standard, the word

3.1 Class - refer to the category according to the level of difficulty and complexity of skills and knowledge required of the job.

4. Delimitation of this Standard

In the context of this prepared standard, Plant Maintenance Mechanic's body of knowledge and skills covers only machine maintenance and does NOT include:

4.1 machine tool rebuilding
4.2 production tooling

JOB DESCRIPTION

PLANT MAINTENANCE MECHANIC

A Plant Maintenance Mechanic performs preventive and corrective maintenance, repairs and maintains fluid systems, install and removes machinery, and fabricates and fits machinery parts.

CLASSIFICATION

In this Occupational Skills Standard, Plant Maintenance Mechanics are classified according to level of difficulty and complexity of skills and knowledge required of the job and consideration on safety.

A PLANT MAINTENANCE MECHANIC CLASS B is equivalent to a skilled worker who has the ability to do a practical job or work at high level of efficiency and manipulative skills.

A PLANT MAINTENANCE MECHANIC CLASS A is equivalent to a highly - skilled worker who has the ability to perform a wide range of tasks at high level competence.

PLANT MAINTENANCE MECHANIC

CLASS B

A Plant Maintenance Mechanic Class B performs preventive maintenance, repairs and maintains fluid system, and fabricates and fits parts into assembly.

In particular, under limited supervision of a Class A mechanic, he:

1. Lubricate and adjusts machines, belts and drives, chain and sprockets drives, gobs, couplings and seals and participates in training and orients trainees and performs housekeeping;

2. Replaces gaskets and seals, hydraulic lines and fittings and steel piping system and installs plastic tubes to machines;

3. Performs cutting with hacksaw, cutting with cold chisel, filling and marking of workpieces;

4. Drills, counterbores, countersinks and spot - faces holes and performs threading using taps and dies;

5. Welds, hardens and tempers metals and operates lathe to turn and face workpieces;

6. Bolts, pins and dowels parts and fits wheels, keys and bearings and bends pipes.

PLANT MAINTENANCE MECHANIC

CLASS A

A Plant maintenance Mechanic Class A performs preventive maintenance, repairs and maintains fluid systems, installs and removes machineries, and fabricates and fits parts into assembly.

In addition to performing work of the Plant maintenance Mechanic Class B, he:

1. Maintains linkages and mechanism, bearing, gear drives, centrifugal and pneumatic clutch and gear box drives;

2. Diagnose machine breakdown and remove and installs plain bearing bushes and sleeves and roller bearings;

3. Removes and installs belts, chain drives, flexible couplings and universal joints;

4. Maintains hydraulic strainers/filters, cylinders, motors or pumps, and repairs/replaces;

5. Repairs/replaces internal parts of vane-and piston -type hydraulic pump or motor;

6. Repairs/replaces hydraulic gaskets and seals, flexible hoses. Lines, fittings and valves;

7. Install and maintains air-compressor and water pump;

8. Transport, moves, installs, positions and aligns machineries;

9. Reams holes and laps flat surfaces and aligns machineries;

10. Cuts, shapes, welds and solders metal using gas cutting equipment; and

11. Aligns parts, scrapes workpieces, fits flanges and balances static rotating parts.

INDEX OF KNOWLEDGE REQUIREMENTS

Code	Knowledge Requirements	Class B	Class A
1.1	**SAFETY PRECAUTIONS**		
1.1.1	Safe handling of tools, equipment and materials	X	
1.1.2	Protective clothing and equipment	X	
1.1.3	Cleanliness and tidiness	X	
1.1.4	First-aid treatment	X	
1.1.5	Fire extinguishers	X	
1.1.6	Safety ad health regulation	X	
1.2	**BLUEPRINT READING AND DRAWING**		
1.2.1	**The Working Drawing:** requirement of an explicit working working drawing, manufacturing, specifications to ensure correct processing	X	
1.2.2	**ISO Limits and Fits:** general and shafts, commonly used holes and shafts; tolerances grades; commonly used fits, use of tables	X	
1.2.3	**The reference surface:** datum featuring used measuring and sitting up	X	
1.2.4	**Machining accuracy:** dimension chain and classification; rules in dimensional relationship	X	
1.2.5	**Geometrical Tolerances:** Conventional representation of geometric tolerances especially to straightness, fitness, parallelism and locational tolerances	X	
1.2.6	**Surface Finish:** Definition of terms; conventional representation specification	X	
1.2.7	**Graphs:** Use and interpretation ; making graphs of different types, cartesian, polar, and logarithmic	X	
1.3	**SHOP MATHEMATICS**		
1.3.1	Average, percentage, ratio and proportion	X	
1.3.2	Manipulation of formulas Areas and plan figure	X	
	Volume and weight of common regular solids	X	
1.3.3	Geometrical properties of a circle	X	
1.3.4	Simple trigonometric functions and application	X	
1.3.5	Pythagorean theorem	X	
1.3.6	Workshop problem in layout, measuring, setting up and machining	X	

Code	Knowledge Requirements	Class B	Class A
1.4	**MEASUREMENTS AND INSPECTION**		
1.4.1	Standard of length; international metric standard; the flow chart showing interrelation form primary workshop measuring instrument; dimensional stability in the workshop, the “ ten percent rule “ calibration of measuring tools.		X
1.4.2	**Tools of Measuring :** The reference gauge, the measuring tools, and comparators:	X	
	1.4.2.1 Gauges Blocks: the use and care of gauges block as measuring and marking tools		X
	1.4.2.2 Measuring Tools: Use, care, and calibration of vernier calipers, micrometers, dial, indicators, special measuring tools, special applications in measuring angles, tapers, center distances, bores, etc.	X	
	1.4.2.3 Comparative Measurements: types of comparators; profile projection and tool makers microscope		X
1. 5	**MATERIALS & HEAT TREATMENT**		
1.5.1	Tool Components		
	1.5.1.1 Physical properties of tool components for cutting and searing, drawing, hot pressing tool, extrusion tools, dies sinking tools:		
	- Low melting alloys	X	
	- Cast iron , high grade	X	
	- Carbon steel	X	
	- Tool steel and alloyed steel		X
	- Rubber, polyurethane		X
	- Carbides		X
	- Composites		X

Code	Knowledge Requirements	Class B	Class A
1.5.2	Heat treatment operations		
	1.5.2.1 The procedure followed in:		
	- Annealing		X
	- Normalizing		X
	- Hardening	X	
	- Tempering	X	
	- Flame hardening	X	
	1.5.2.2 Heat treatment equipment and control	X	
	1.5.2.3 Inspection of heat treated parts		
	- Crack detection		X
	- Warpage test		X
	- Hardness test		X
1.6	**TOOLROOM MACHINING**		
1.6.1	**Materials Preparations:** machine used for preparation of materials: power hacksaw, bandsaw, Abrasive cutters, gas cutting .	X	
1.6.2	**Marking and Layout:**		
	1.6.2.1 The manual method of location of holes and outlines	X	
	1.6.2.2 The use of jigs borers		X
1.6.3	**Turning:** The machine tools needed, work holding devices, tools and attachment		
	1.6.3.1 Safety precaution	X	
	1.6.3.2 Spindle speed and feed rate for different materials and tools	X	
1.6.4	**Milling:** Machine tool used, work holding devices, tools and attachment used		
	1.6.4.1 Safety precaution	X	
	1.6.4.2 Spindle speed and feed rate for different materials and tools	X	
	1.6.4.3 Work holding devices	X	
	1.6.4.4 Milling faults and ratifications		X
	1.6.4.5 Milling computations	X	
	1.6.4.6 Advance milling problems		X

Code	Knowledge Requirements	Class B	Class A
1.6.5	**Grinding:**		
	1.6.5.1 Safety precaution	X	
	1.6.5.2 Selection of grinding wheel	X	
	1.6.5.3 Grinding wheel specifications	X	
	1.6.5.4 Balancing & mounting of grinding wheel		X
	1.6.5.5 Dressing a grinding wheel		X
	1.6.5.6 Wheel speed, work speed and feed rate		X
	1.6.5.7 Work holding devices	X	
	1.6.5.8 Grinding operations involving		
	- Surface grinding		X
	- Cylindrical and taper		X
	- Internal grinding		X
	- Linear form grinding		X
1.6.6	Machining surfaces of Irregular shapes		X
1.6.7	**Bench work operations safety, tools, work holding devices for:**		
	- Filing	X	
	- Scraping	X	
	- Drilling / counter boring	X	
	- Reaming		X
	- Tapping	X	
	- Polishing		X
1.7	**HAND AND POWER OPERATED TOOLS**		
1.7.1	Types and uses of handballs (wrenches, files, pliers, pullers, screw drivers, punchers, hacksaws and hammers)	X	
1.7.2	Types and uses of power tools (grinders, sanders, polishers, electric drills and hydraukic pullers)		X
1.8	**HYDRAULICS AND PNEUMATICS**		
1.8.1	Knowledge of the symbols used in hydraulic and pneumatic diagram	X	
1.8.2	Types of control valves and application	X	
1.8.3	Basic flued principles	X	
1.8.4	Hydraulic and pneumatic pipings		X
1.8.5	Uses of filters and strainers	X	
1.8.6	Types of pumps and uses		X

Code	Knowledge Requirements	Class B	Class A
1.8.7	Liquid use in hydraulic system		X
1.8.8	Hydrostatic testing		X
1.9	**MECHNISM AND MACHINE ELEMENTS**		
1.9.1	Identification of common machine parts	X	
1.9.2	Kinds of bearing and their uses	X	
1.9.3	Storage, cleaning and lubrication of bearings	X	
1.9.4	Identification of different kinds of seals, packing and gaskets	X	
1.9.5	Procedure in installing of belts, couplings and bearings	X	
1.9.6	Clearance / timing of gears		X
1.9.7	Relation of machine parts and others	X	
1.9.8	Cams and their uses		X
1.10	**MACHINE REPAIR AND OVERHAUL**		
1.10.1	Function of machine elements	X	
1.10.2	Function of machine parts	X	
1.10.3	Steps and procedures in dismantling and assembling of:		
	- standard parts	X	
	- major parts / components of machine		X
1.10.4	Common machine faults	X	
1.10.5	Special tools / fixtures for dismantling / assembling		X
1.10.6	Fits and tolerances		X
1.10.7	Electric arc and gas welding	X	
1.11	**PREVENTIVE AND CORRECTIVE MAINTENANCE**		
1.11.1	Lubricating procedures for machines like shaper, drilling, lathe, milling , boring and grinding machine	X	
1.11.2	Frequency for changing of oils of shop equipment/machine tools	X	
1.11.3	Identification of machine parts requiring lubrication	X	
1.11.4	Knowledge of checking out machine for major repair		X
1.12	**MACHINE RECONDITIONING**		
1.12.1	Knowledge of machine tool standard		X
1.12.2	Machine metrology	X	
1,12,3	Knowledge of transporting equipment	X	
1.12.4	Sequence of reconditioning operation		X
1.12.5	Steps and procedures in setting-up parts	X	
1.12.6	Type and uses of rust preventive and paints		X

INDEX OF SKILLS REQUIREMENTS

Code	Skills Requirements	Class B	Class A
2.1	**PERFORMING PREVENTIVE MAINTENANCE**		
2.1.1	Performing PM inspection		X
2.1.2	Lubricating machines	X	
2.1.3	Maintaining belts and V-belt drives	X	
2.1.4	Maintaining chain and sprocket drives	X	
2.1.5	Inspecting and maintaining linkages and mechanism		X
2.1.6	Maintaining bearings		X
2.1.7	Maintaining gear drives		X
2.1.8	Adjusting gibs for free operations	X	
2.1.9	Maintaining couplings	X	
2.1.10	Inspecting/maintaining centrifugal clutch		X
2.1.11	Inspecting/maintaining pneumatic clutch		X
2.1.12	Inspecting/maintaining gear box drives	X	
2.1.13	Lubricating seal faces	X	
2.1.14	Participating in safety training program	X	
2.1.15	Orienting OJT trainees/operators on safety and maintenance	X	
2.1.16	Performing housekeeping	X	
2.2	**PERFORMING CORRECTIVE MAINTENANCE**		
2.2.1	Diagnosing machine breakdown		X
2.2.2	Removing and installing plain bearing (bushes and sleeves)		X
2.2.3	Removing and installing plain bearing on shafts		X
2.2.4	Removing and installing roller bearings		X
2.2.5	Straightening shaft using a press		X
2.2.6	Replacing a shaft		X
2.2.7	Removing and installing V-belt assembly		X
2.2.8	Constructing belt joints with mechanical fastener		X
2.2.9	Constructing belt joints with adhesive		X
2.2.10	Removing and installing chain drives		X
2.2.11	Installing and aligning flexible coupling		X
2.2.12	Replacing universal joints		X
2.2.13	Installing and aligning closed gear drive		X
2.2.14	Removing and installing lip seal		X
2.2.15	Removing and installing mechanical seals		X
2.2.16	Ordering materials for the job		X
2.2.17	Updating machine maintenance record		X

Code	Skills Requirements	Class B	Class A
2.3	**REPAIRING AND MAINTAINING FLUID SYSTEM**		
2.3.1	Inspecting a hydraulic system		X
2.3.2	Replacing and clean hydraulic strainer/filter		X
2.3.3	Refilling hydraulic system		X
2.3.4	Inspecting hydraulic cylinder		X
2.3.5	Replacing hydraulic motor or pump		X
2.3.6	Replacing internal parts of hydraulic pump (vane type)		X
2.3.7	Replacing internal parts of hydraulic pump (piston type)		X
2.3.8	Replacing internal parts of hydraulic motor (vane type)		X
2.3.9	Replacing hydraulic gasket and seals	X	
2.3.10	Repairing flexible hose (high pressure)		X
2.3.11	Repairing /replace hydraulic lines		X
2.3.12	Replacing damaged /faulty lines/fitting		X
2.3.13	Replacing valves in a hydraulic system		X
2.3.14	Inspecting pressure control relief valve (relief, reducing, sequencing)		X
2.3.15	Inspecting directional valve		X
2.3.16	Installing and replace a steel piping system	X	
2.3.17	Installing air compressor		X
2.3.18	Lubricating air compressor		X
2.3.19	Inspecting/maintain air compressor		X
2.3.20	Installing plastic tube		X
2.3.21	Inspecting/maintaining water pump	X	
2.4	**INSTALLING AND MOVING MACHINERY**		
2.4.1	Preparing area for machine installation		X
2.4.2	Raising machinery using jacks, bars and blocks		X
2.4.3	Transporting machinery using forklift		X
2.4.4	Transporting machinery using overhead crane or chain block		X
2.4.5	Moving machine/equipment using roller		X
2.4.6	Moving machine/equipment with skids or dollies		X
2.4.7	Positioning and secure machinery on foundation		X
2.4.8	Leveling machinery on foundation		X
2.4.9	Aligning shaft (reverse indicator method)		X
2.4.10	Performing alignment test		X
2.4.11	Connecting machine to air or hydraulic source		X
2.4.12	Blocking and bracing equipment for moving or shipping		X
2.4.13	Cribbing a piece of equipment to distribute the load over a large area		X

Code	Skills Requirements	Class B	Class A
2.5	**FABRICATINGt SIMPLE PARTS**		
2.5.1	Cutting metal stock with hacksaw	X	
2.5.2	Cutting metal stock with chisel		X
2.5.3	Filing workpiece	X	
2.5.4	Marking workpiece	X	
2.5.5	Drilling holes with portable tools	X	
2.5.6	Drilling holes to size with drill press	X	
2.5.7	Counter boring holes to depth	X	
2.5.8	Counter sinking holes	X	
2.5.9	Spot-facing hole		X
2.5.10	Reaming holes with hand reamer		X
2.5.11	Reaming hole using machine reamer		X
2.5.12	Cutting thread with hand taps	X	
2.5.13	Cutting thread with dies	X	
2.5.14	Removing damaged thread screws etc.		X
2.5.15	Lapping flat surfaces		X
2.5.16	Lapping holes	X	
2.5.17	Installing gas regulator		X
2.5.18	Flame cutting metal with gas equipment	X	
2.5.19	De-burring with hand grinder	X	
2.5.20	Shaping (form) metals using heat	X	
2.5.21	Gas welding ferrous metals		X
2.5.22	Lead soldering metal		X
2.5.23	Off-hand grinding workpiece		X
2.5.24	Cutting off materials with disc cutter		X
2.5.25	Arc-welding ferrous metal	X	
2.5.26	Annealing metals		X
2.5.27	Hardening metals	X	
2.5.28	Tempering metals	X	
2.5.29	Turning workpiece	X	
2.5.30	Facing workpiece	X	
2.5.31	Grinding flat surfaces on surface grinder		X
2.5.32	Milling workpiece square	X	

Code	Skills Requirements	Class B	Class A
2.6	**FITTING PARTS INTO ASSEMBLY**		
2.6.1	Fitting parts into assembly		X
2.6.2	Bolting parts	X	
2.6.3	Doweling parts	X	
2.6.4	Pinning parts to a shaft	X	
2.6.5	Locating parts by pegging		X
2.6.6	Fitting /extract wheel	X	
2.6.7	Fitting parallel and tapered keys	X	
2.6.8	Fitting/extract bearing	X	
2.6.9	Aligning parts		X
2.6.10	Scraping a small flat surface		X
2.6.11	Hand scraping bearing (round) surface		X
2.6.12	Balancing static rotating parts		X
2.6.13	Bending pipes	X	
2.6.14	Fitting pipe flange		X

TASK ANALYSIS SHEET _____

OCCUPATION TITLE: : PLANT MAINTENANCE MECHANIC			
DUTY NO.	**A**	**DUTY**	**PERFORM PREVENTIVE MAINTENANCE**
TASK NO.	**3**		**Inspect/Maintain V-belt drive**
LEVEL		PERFORMANCE OBJECTIVES : Given malfunctioning belt drive, spare parts, supplies, tools and equipment, the student(s) / trainee(s) must be able to maintain a V-belt drive. The drive must deliver rated power smoothly and at rated speed.	

STEPS	**PERFORMANCE CRITERIA**	**RELATED KNOWLEDGE, ATTITUDE AND SAFETY**	**TOOLS, EQUIPMENT, AND MATERIALS**
1. Run mechanism at normal rate and load. 2. Check for flying dirt, oil, grease, water and other debris. 3. Check for flapping, oscillating, and slipping of belts. 4. Check for squealing, binding and rubbing of parts. 5. Turn off mechanism power. Remove belt guard. 6. Check belts and pulley for uneven wear and damage, and replace if necessary. 7. Check for loose mounting bolts and loose guards. 8. Check for hot belt, bearing and pulley. 9. Check pulley alignment. 10. Check belt tension. 11. Clean, inspect drive for wear and damage. 12. Install belt guard. 13. Start mechanism and test. 14. Note findings in preventive maintenance inspection report. 15. Make necessary recommendation.	• The drive must deliver rated power smoothly and at rated speed and free of uneven wear, squealing, high temperatures, flapping, flying dirt, rubbing of guard, and unscheduled shut down.	• Explain the principle of operation of V-belts • Enumerate the maintenance practices in the use of V-belts • Enumerate the conditions of V-belt malfunction, symptoms, and causes of failure • Follow the standard procedure in removing and installing V-belts • Exercise extreme care in the inspection of V-belts at running condition.	• Feeler bar • Level set • Mechanic's tool box • (hand tool) • Personal safety equipment • Set of V-belts sheave groove templates • Straightedge or wire • Switch lock out • Tension meter • Thermometer (Fahrenheit) • Tachometer

TASK ANALYSIS SHEET _____

OCCUPATION TITLE : PLANT MAINTENANCE MECHANIC			
DUTY NO.	**A**	**DUTY**	**PERFORM PREVENTIVE MAINTENANCE**
TASK NO.	**4**	TASK	**Inspect/maintain chain and sprocket drives**
LEVEL		PERFORMANCE OBJECTIVES : Given the necessary tools , materials and equipment, the student(s) / trainee(s) must be able to maintain chain and sprocket drive. Chains and sprockets must operate within manufacturer's specifications.	

STEPS	PERFORMANCE CRITERIA	RELATED KNOWLEDGE, ATTITUDE AND SAFETY	TOOLS, EQUIPMENT, AND MATERIALS
1. Run mechanism at normal rate and load; Check for: • hot bearing, sprockets, and chain. • flying dirt, oil, grease, water and other debris. • loose, flapping, chain. • rubbing, squealing, binding parts and loose bolts. 2. Stop and turn off machine power. 3. Remove safety guards(s) inspection plates; check for: • chain and sprockets for uneven wear and damage. • loose set screws, mounting bolts. Tighten as necessary. • correct for chain elongation in accordance with manufacturer's specifications. 4. Start mechanism and test. 5. Note findings in PM Inspection Report with findings and action to be done. 6. Submit report to supervisor for final decision.	• Chain and sprocket drive must deliver rated power at rated speed smoothly , be free of uneven wear, squealing, high temperature, loose bolts, flapping chain, flying dirt, steam, oil, water and other chemicals, rubbing , binding, and unscheduled shut down.	• Explain the principle of operation of chain drives, and its specifications • Enumerate the operating symptoms of malfunctions of chain drives and causes of failure • Enumerate the standard practices in the maintenance of chain drives • Follow the standard procedure in handling, aseembly and disassembly of chain drive. • Observe safety precautions in the inspection of chain drives while the machine is running.	1. Chain detacher (s) 2. Coupling tools 3. Drive pins 4. Fahrenheit thermometer 5. feeler bars 6. Level set 7. manufacturers specifications 8. Mechanic's tool box 9. Personal safety equipment 10. Piano wire and tightener 11. straightedge

OCCUPATION TITLE: PLANT MAINTENANCE MECHANIC				
DUTY NO.	**A**	**DUTY**	**PERFORM PREVENTIVE MAINTENANCE**	
TASK NO.	**8**	TASK	**Adjust gibs of slide ways**	
LEVEL		PERFORMANCE OBJECTIVES : Given a machine mechanism adjustable gibs, lubricants, tools and equipment, the student(s) / trainee(s) must be able to adjust gibs for free operation. The moving part must operate freely without binding or side movement with specified clearance.		

STEPS	**PERFORMANCE CRITERIA**	**RELATED KNOWLEDGE, ATTITUDE AND SAFETY**	**TOOLS, EQUIPMENT, AND MATERIALS**
1. Remove gibs and wipe /clean area(s). 2. Determine gib clearance on both sides and ends with feeler gages. 3. Check sliding surfaces of mechanism for excessive wear with dial indicator and micrometers. 4. Check gib surfaces for excessive wear and galled with dial indicator. Replace, straighten , or scrape if necessary. 5. Adjust gib by loosening screw at small end and tightening screw at large end of gib. Draw up to point of feeling pressure and back off to specified clearance. 6. Lubricate. 7. Operate the mechanism for freedom of operation without side movement.	• Moving parts must operate freely, without binding or side movement with specified clearance.	• Explain the reasons for using gibs in slide ways. • Enumerate the different types or shapes of gibs.	1. Dial indicator 2. Feeler gages 3. Gib wrenches or slotted screw driver head 4. Mechanic's tool box (hand tools) 5. Oil can 6. Personal safety equipment 7. Scrapers 8. Shim stock (assortment of metal shims) 9. Wiping rags

TASK ANALYSIS SHEET _____

OCCUPATION TITLE: PLANT MAINTENANCE MECHANIC			
DUTY NO.	**A**	**DUTY**	**PERFORM PREVENTIVE MAINTENANCE**
TASK NO.	**9**	TASK	**Inspect/maintain drive couplings**
LEVEL		PERFORMANCE OBJECTIVES : Given a machine, tools and equipment; the student(s) / trainee(s) must be able to inspect and maintain drive couplings. The coupling shall perform smoothly, clean and without vibration and noise.	

STEPS	**PERFORMANCE CRITERIA**	**RELATED KNOWLEDGE, ATTITUDE AND SAFETY**	**TOOLS, EQUIPMENT, AND MATERIALS**
1. Coordinate with operator regarding the inspection . 2. Observe the drive coupling while it is running: • coupling for flying dirt, oil, or grease. • for any unusual noise generated. • for any vibration of the part. 1. Clean and adjust as necessary : • Tighten mounting bolts • Alignment of coupling halves. 1. Record work done on preventive maintenace inspection form. 2. Submit preventive maintenance Inspection form to Supervisor 3. Record in Equipment Maintenance Record the maintenance action done.	• Coupling shall be clean and adjusted to perform smoothly without vibration and noise • Recommend further action . • Inspection report submitted	• Explain the operating principle of drive couplings. • Enumerate the different types of couplings. • Explain the main considerations in the installation of drive couplings. • Describe the method of installing drive couplings. • Enumerate the different malfunctions of couplings, causes and corresponding remedy.	• Coupling • Mechanic's tool box • Dial indicator • Rags • Solvents • Preventive maintenance Inspection form • Rags

TASK ANALYSIS SHEET _____

OCCUPATION TITLE: PLANT MAINTENANCE MECHANIC			
DUTY NO.	**A**	**DUTY**	**PERFORM PREVENTIVE MAINTENANCE**
TASK NO.	**13**	TASK	**Lubricate seal faces**
LEVEL		PERFORMANCE OBJECTIVES : Given the necessary tools, equipment and materials, the student(s) / trainee(s) must be able to lubricate seal faces to manufacturers specifications.	

STEPS	**PERFORMANCE CRITERIA**	**RELATED KNOWLEDGE, ATTITUDE AND SAFETY**	**TOOLS, EQUIPMENT, AND MATERIALS**
1. Turn off mechanism power. 2. Consult manufacturer's manual. 3. Select lubricant. 4. wipe off fittings. 5. Lubricate. Wipe off excess lubricant. 6. Start mechanism, observe. 7. Inspect for lubricant leakage.	• Lubricated seal must conform to manufacturers specifications.	• Knowledge of lubricating oils • Knowledge of different seals	• Mechanics tool box • Lubricant • Manufacturers manual • Rags

TASK ANALYSIS SHEET _____

OCCUPATION TITLE: PLANT MAINTENANCE MECHANIC			
DUTY NO.	**A**	**DUTY**	**PERFORM PREVENTIVE MAINTENANCE**
TASK NO.	**14**	TASK	**Participate in safety training program**
LEVEL		PERFORMANCE OBJECTIVES : Given an opportunity to participate in a safety training program, the student(s) / trainee(s) must be able to work in the company following the safety precautions and practices in the plant.	

STEPS	**PERFORMANCE CRITERIA**	**RELATED KNOWLEDGE, ATTITUDE AND SAFETY**	**TOOLS, EQUIPMENT, AND MATERIALS**
1. Handle safely cylinder tanks in moving from one place to another. 2. Lift loads safely. 3. Put out fires using appropriate fire extinguishers. 4. Apply first aid for cuts, and burns. 5. Apply artificial respiration. 6. Apply cardio-pulmonary resuscitation.	• Observable behavior or safety practices noticeable.	• Enumerate the causes of accidents • Explain the hidden costs of accidents. • Describe the safe handling of materials and tools. • Enumerate the different types of fires and corresponding fire extinguisher to put it out.	1. First aid kit 2. Fire extiguisher 3. Fire fighting equipment 4. Safety posters

TASK ANALYSIS SHEET _____

OCCUPATION TITLE: PLANT MAINTENANCE MECHANIC			
DUTY NO.	**A**	**DUTY**	**PERFORM PREVENTIVE MAINTENANCE**
TASK NO.	**15**	TASK	**Orient OJT trainees on safety and maintenance practices**
LEVEL		PERFORMANCE OBJECTIVES : Given the necessary material tools and equipment, the OJT student(s) / trainee(s) must be oriented on safety and maintenance practices. Upon completion the OJT student(s) / trainee(s) can perform machine operating procedures within company's safety standards.	

STEPS	PERFORMANCE CRITERIA	RELATED KNOWLEDGE, ATTITUDE AND SAFETY	TOOLS, EQUIPMENT, AND MATERIALS
1. Orient the OJT trainee on the physical layout of the plant. 2. Present /discuss plant /department structure and policies. 3. Present/discuss general safety precautions and specific safety on machine operations. 4. Demonstrate job tasks as necessary. 5. Ask for and discuss questions from new employees.	• Oriented personnel must be familiar with organization's safety policies and machine operating procedures.	• List down the organizational structure of the plant. • List down the organizational structure in the maintenance department. • Enumerate company regulations regarding: absences and tardiness; Timekeeping; wage computation • State the general safety precautions in the plant. • Enumerate the different personal safety equipment while doing the job.	1. Floor plan of facilities 2. Tools 3. Spare parts 4. Company policies 5. Organization's safety and health policies 6. New employee personnel files 7. Personal safety equipment

TASK ANALYSIS SHEET _____

OCCUPATION TITLE: PLANT MECHANIC			
DUTY NO.	**A**	**DUTY**	**PERFORM PREVENTIVE MAINTENANCE**
TASK NO.	**16**	TASK	**Perform housekeeping**
LEVEL		PERFORMANCE OBJECTIVES : Given the necessary tools, equipment and specific work area, the student(s) / trainee(s) must be able to perform housekeeping. When completed, the area and equipment must be clean with all tools and devices properly stored.	

STEPS	**PERFORMANCE CRITERIA**	**RELATED KNOWLEDGE, ATTITUDE AND SAFETY**	**TOOLS, EQUIPMENT, AND MATERIALS**
1. Inspect maintenance area of responsibility 2. Clean enclosing area. 3. Clean area under machines and work tables 4. Clean Workbench and vise. 5. Clean machine of chips, dust and grime. 6. Dispose off all trashes in an approved area or container. 7. Arrange for acquiring cabinets for storage of lubricants. Arrange lubricants in storage. Clean around lubricant storage. 8. Maintain trash box around the area.	• The area and equipment must be clean with all tools and devices properly stored.	• Explain the importance of cleanliness in the performance of workers especially maintenance men. • Enumerate and explain the Japanese **5 S**s of workplace management. • Explain the phrase " a place for everything and everything in its place."	• Brooms scrapers • Scrapers • Mops • Rags • Dustpans • Trash cans

DACUM Research Chart for PLANT MAINTENANCE MECHANIC

Duties — **Tasks**

A — Perform Preventive Maintenance

Perform PM inspection	Lubricate machines	Maintain belt V-belt drive	Maintain chain and sprocket drives	Inspect, maintain linkage and mechanism	Maintain bearings	Maintain gear drives	Adjust gib for free operations
A-1 A	A-2 B	A-3 B	A-4 B	A-5 A	A-6 A	A-7 A	A-8. B
Maintain couplings	Inspect/ maintain centrifugal clutch	Inspect/ maintain pneumatic clutch	Inspect/ maintain gear box drive	Lubricate seal faces	Participate in safety training program	Orient OJT trainees/ operator on safety and maintenance	Perform housekeeping
A-9 B	A-10 A	A-11 A	A-12 A	A-13 B	A-14. B B	A-15 B	A-16 B

B — Perform Corrective Maintenance

Diagnose machine breakdown	Remove and install plain bearing (bushes and sleeves) B	Remove and install plain bearing on shafts	Remove and install roller bearing B	Straighten a shaft using a press	Replace a shaft	Remove and install a V-belt assembly	Construct belt joints with mechanical fasteners
B-1 A	B-2 A	B-3 A	B-4 A	B-5 A	B-6 A	B-7 A	B-8 A
Construct belt joints with adhesives	Remove and install chain drive	Install and align flexible couplings	Replace universal joint	Install and align closed gear drive	Remove and replace lip seal	Remove and install mechanical seals	Order materials needed for the job
B-9 A	B-10 A	B-11 A	B-12 A	B-13 A	B-14 A	B-15 A	B-16 A
Update machine maintenance record							
B-17 A							

DACUM Research Chart for PLANT MAINTENANCE MECHANIC

Duties		Tasks							
C	**Repair and maintain fluid system**	Inspect a hydraulic system B C-1 | A	Replace and clean hydraulic strainer/filter C-2 | A	Refill hydraulic system C-3 | A	Inspect hydraulic cylinder C-4 | A	Replace hydraulic motor or pump C-5 | A	Replace internal parts o f hydraulic pump (vane type) C-6 | A	Replace internal parts of hydraulic pump (piston type) C-7 | A	Replace internal parts of hydraulic motor (vane type) C-8 | A
		Replace hydraulic gasket and seals C-9. A | B	Repair flexible hose (high pressure) C-10.A | A	Repair/replace hydraulic lines C-11. A | B	Replaced damaged/faulty lines/fittings C-12. A | B	Replace valves in a hydraulic system C-13. A | A	Inspect pressure control valve (relief, reducing, sequencing) C-14 | A	Inspect directional valve C-15 | A	Install and replace a steel piping system C-16 | B
		Install air compressor C-17 | A	Lubricate air compressor C-18 | A	Inspect/ maintain air compressor C-19 | A	Install plastic tube to machine C-20 | B	Disassemble and assemble a water circulating pump C-21 | A			
D	**Install and Remove Machinery**	Prepare area for machine installation D-1 | A	Raise machinery using jacks , bars and blocks D-2 | A	Transport machinery using fork lift D-3 | A	Transport machinery using overhead crane or chain block D-4 | A	Move machine/ equipment using roller D-5 | A	Move machine/ equipment with skids or dollies D-6 | A	Position and secure machinery on foundation D-7 |	Level machinery on foundation D-8 | A
		Align shaft (reverse indicator method) D-9 | A	Perform alignment test D-10 | A	Connect machine to air or hydraulic source D-11 | A	Block and brace equipment for moving or shipping D-12 | A	Crib a piece of equipment to distribute the load over a larger area D-13 | A			

DACUM Research Chart for PLANT MAINTENANCE MECHANIC

Duties **Tasks**

E **Fabricate simple parts**

Cut metal stock with hand hacksaw	Cut metal stock with chisel	File workpiece	Mark workpiece	Drill holes with portable tools	Drill holes to size with drill press	Counterbore holes to depth	Countersink holes
E-1. B B	E-2. A B	E-3.A B	E-4.A B	E-5.A B	E-6.A B	E-7.A B	E-8. B B
Spot- face hole	Ream holes with hand reamer	Ream hole using machine reamer	Cut thread with hand taps	Cut thread with dies	Remove damaged screws etc.	Lap flat surfaces	Lap holes
E-9. A B	E-10 A	E-11 A	E-12 B	E-13 B	E-14 A	E-15 A	E-16 A
Install gas regulator	Flame cut metal with gas equipment	De-burr with hand grinder	Shape (form) metals using heat	Gas weld ferrous metals B	Lead solder metal	off -hand grind workpiece	Cut off materials with disc cutter
E-17 A	E-18 A	E-19 A	E-20 A	E-21 A	E-22 A	E-23 A	E-24 A
Arc-weld ferrous metals	Anneal metals	Harden metals	Temper metals	Turn work piece	Face workpiece	Grind flat surfaces on surface grinder	Mill workpiece square
E-25 B	E-26 A	E-27 B	E-28 B	E-29 B	E-30 B	E-31 A	E-32 A

F **Fit parts into assembly**

Fit parts into assembly	Bolt parts	Dowel parts	Pin parts to a shaft	Locate parts by pegging	Fit /extract wheel	Fit parallel and tapered keys	Fit/extract bearing
F-1 A	F-2 B	F-3 B	F-4 B	F-5 A	F-6 B	F-7 B	F-8 B
Align parts	Scrape a small flat surface	Hand scrape bearing (round) surfaces	Balance static rotating parts	Bend pipes	Fit pipe flanges		
F-9 A	F-10 A	F-11 A	F-12 A	F-13 B	f-14 A		

Standard Time Model for a One Year Program (First Level) Recommended for Dual Training System and Dualized Programs

Part 1: **1st Semester (18 weeks)**	
16 weeks Fulltime In-School/Center Training to cover the Knowledge Requirements 1 week = 5 days = 30 hours (h) (6 hours per day) **16 weeks = 80 days = 480 h** Note: This number of hours is exclusive to be spent for the Knowledge Requirements. It is possible to add hours for General Educational Subjects, Academs or other activities which are not part of the Dualized Program.	**2 weeks Industry Immersion** 1 week = 6 days = 48 hours **2 weeks = 12 days = 96 h** Industry Immersion is a suggested scheme where trainees join in selected firms for familiarization and job induction of possible company assignment.

Part 2: **2nd Semester (18 weeks) plus Semestral Break (10 weeks)**		
18 weeks		**10 weeks**
1 day (8 hours) per week In-School/Center Training to cover the Related Knowledge **18 weeks** **"=" 18 days** **= 144 h**	**5 days (40 hours) per week In-Firm Training to cover the Skills Requirements** **18 weeks** **"=" 90 days** **= 720 h**	**6 days (48 hours) per week In-Firm Training to cover the Skills Requirements** **10 weeks** **= 60 days** **= 480 h**
In-School/Center Training = 144 h	**In-Firm Training = 720 + 480** (= 150 days) **= 1200 h**	

Summary	**In-School/Center**	**Industry**
Part 1 **Knowledge Requirements**	**480 h** (80 days)	**96h** (12 days)
Part 2 **Skills Requirements**	**144 h** (18 days)	**1200 h** (150 days)
	624h **= 32,5 %**	**1296 h** **= 67,5 %**
Total	**1920 h** **=100 %**	

CTAD, Schwarz, 11/03/99

Dualization of Curriculum: Creating a time frame

Name of participant:________________________________ Institution: _________________________________ Region:________

Occupational title (of existing curriculum or Training Regulation):____

Creating a time frame. 60 – 70% of the total duration of the program must be imparted by the training company while 30 – 40% should be imparted by the school/training center.

Please decide/answer the following questions and justify your decision:

What level(s)/(class(es) your draft Dualized Core Curriculum shall cover?

Does the existing Training Regulation/Curriculum contain time allotment for Knowledge or Skills Requirements?

How long (Semesters, weeks, days) shall be the total duration of the program? Shall Saturday be included?

For the pilot implementation it is recommended that the first part of the program shall be organized as full time in-school/center, to impart the Knowledge Requirements. It is also recommended that part 1 should include an Industry Immersion as a suggested scheme where trainees join in selected firms for familiarization and job induction of possible company assignment. How long shall be the full time in-school/center part and how long shall be the integrated Industry Immersion (weeks) ?

How shall be the time divided between Knowledge Requirements and Industry Immersion (Part 1 of Dualized Core Curriculum) and Skills Requirements (Part 2 Dualized Core Curriculum) ? Please indicate the total time for Knowledge Requirements and Skills Requirements (only in weeks):

Knowledge Requirements and Industry Immersion (Part 1):

Skills Requirements (Part 2):

Please create a time model:

Knowledge Requirements and Industry Immersion (Part 1) = ……….. weeks = ……….. days

Knowledge Requirements will not only be imparted in Classroom but also in School-Shop.
How will be the time divided (days) between Classroom and School-Shop for Part 1 ?
(This should be only a first assessment, which can be changed in the future development)

No:	Topics	Knowledge	Skills	
		Classroom	School-Shop	Industry
	Knowledge Requirements and Industry Immersion **(Part 1 of the Dualized Core Curriculum)**	……………	…………..	…………
	Summary	…………..		………..
		…………		

Skills Requirements (Part 2)
Skills Requirements will not only be imparted in the Industry but also in School/Training Center.
What will be your time model for this part of the Dual Training Program? How many days per week in School/Training Center? Any other model?

According to your decision about the model, please write down:

Skills Requirements (Part 2): **Total time = ……….. weeks = ……….. days**

Time to be spent in Industry = ……….. days

Time to be spent in School/Training Center = ………... days

The time portion for imparting the Skills Requirements in School/Training Center has to be divided between Classroom and School-Shop. (This should be only a first assessment, which can be changed in the future development)

Time portion for Skills Requirements to be imparted in Classroom = ………. days

Time portion for Skills Requirements to be imparted in School-Shop = ……… days

No:	Topics	Knowledge	Skills	
		Classroom	School-Shop	Industry
	Skills Requirements **(Part 2 of the Dualized Core Curriculum)**	……………	…………..	**………….**
	Summary	…………..		**………**
		………….		

Please list the whole time frame of your Dual Training Program.
Check in the total summary whether your time portions for
In-School/Training Center and In-Industry are within the demanded
30 – 40 % or 60 – 70 %

No:	Topics	Knowledge	Skills	
		Classroom	School-Shop	Industry
	Knowledge Requirements and Industry Immersion (Part 1 Dualized Core Curriculum) **Skills Requirements (Part 2 Dualized Core Curriculum)**	**………** **………**		**……..** **……..**
	Total Summary	**…….** **= ….. %**		**…….** **= …… %**
		……. **=100%**		

Dualized Core Curriculum for Knowledge Requirements and Industry Immersion. Fixing the time portions for classroom, school-shop and industry (Industry Immersion)

Name of participant:___________________________________ Institution: ____________________________________ Region:_________

Occupational title (of existing curriculum or Training Regulation):____

Please list all topics of the Knowledge Requirements of the existing curriculum or Training Regulation you are going to dualize.

Please allocate the time portions for the particular topics of Knowledge Requirements. Do this according to their importance.

Please decide how much of the time portion for every particular topic should be imparted in classroom and how much should be imparted in school-shop.

Please check with your time frame. Since the time frame was only a first assessment, you can change the time alloted to classroom and school-shop.

Core Curriculum for Knowledge Requirements and Industry Immersion (Part 1 of the Dualized Core Curriculum):

No:	Topics (Knowledge Requirements)	Knowledge	Skills	
		Classroom	School-Shop	Industry
				XXXXXX
				XXXXXX
				XXXXXX
				XXXXXX

No:	Topics (Knowledge Requirements)	Knowledge	Skills	
		Classroom	School-Shop	Industry
				XXXXXX
				XXXXXX
				XXXXXX
				XXXXXX
				XXXXXX
				XXXXXX
				XXXXXX
	Industry Immersion			
	Summary			

Dualized Core Curriculum for Skills Requirements. Fixing the time portions for classroom, school-shop and industry.

Name of participant:___________________________________ Institution: ____________________________________ Region:_________

Occupational title (of existing curriculum or Training Regulation):____

Please list all topics of the Skills Requirements (=Duties of the DACUM Research Chart) of the existing curriculum or Training Regulation you are going to dualize.

Please calculate the time portions for the particular topics of Skills Requirements (Duties). This should be guided by the following consideration: How difficult is the task? How important is the task? How complex is the task?

Please decide how much of the time for every particular Duty will be used in the classroom, school-shop and in the industry.

Please check with your time frame. Since the time frame was only a first assessment, you can change the time for the classroom, school-shop and industry imparted skills.

Core Curriculum for Skills Requirements (Part 2 of the Dualized Core Curriculum):

No:	Duties	Knowledge	Skills	
		Classroom	School-Shop	Industry

No:	Duties	Knowledge	Skills	
		Classroom	School-Shop	Industry
	Summary			

Please list the total summary (Part 1 and 2) for your Dualized Core Curriculum.

Please check (again) in the total summary whether your time portions for In-School/Training Center and In-Industry are within the demanded 30 – 40 % or 60 – 70 %

	Total summary **Knowledge Requirements and Industry Immersion (Part 1)** **Skills Requirements (Part 2)**	**………** **………**	**…….** **……..**
		…... **= ……...%**	**…...** **= ……… %**
		…... **= 100%**	

Aufbau eines Wälzlagers

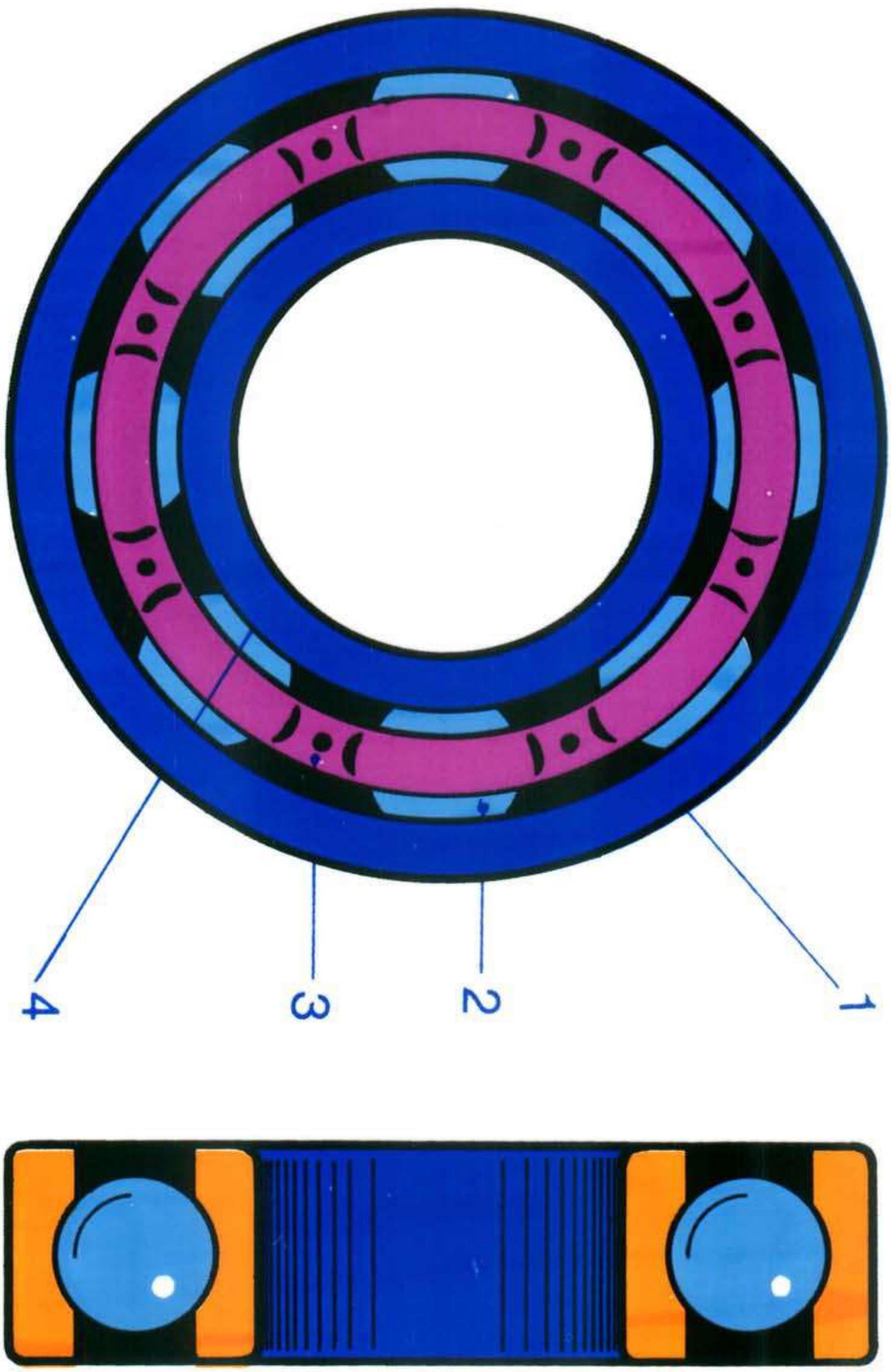

1. Maschinenelemente - Wälzlager
Arten von Wälzkörpern

FR-MALF 1.2.

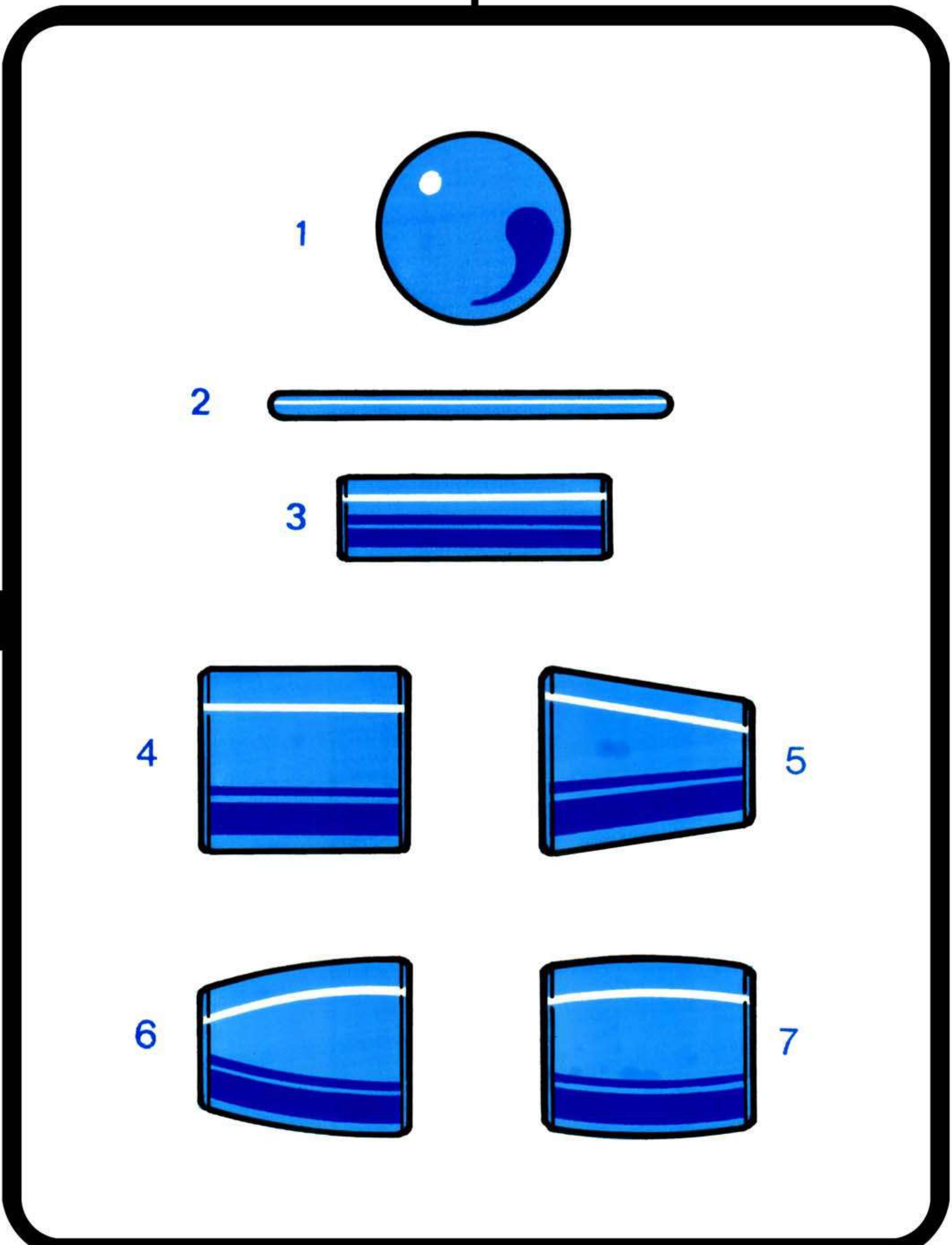

0

1. Maschinenelemente - Wälzlager
Bauformen - Einzelheiten der Gestaltung I

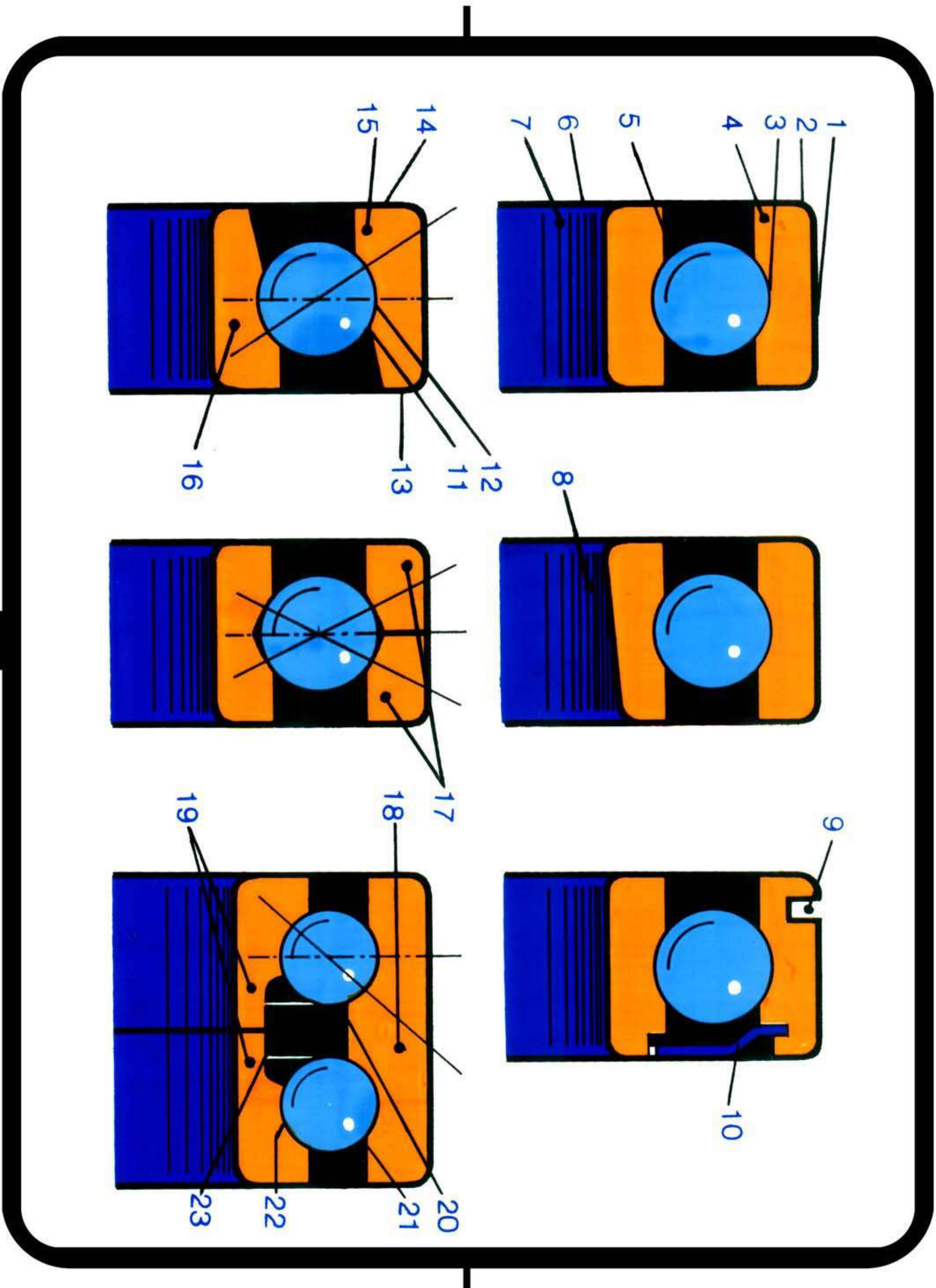

O

1. Maschinenelemente - Wälzlager

Bauformen - Einzelheiten der Gestaltung II

FR-MALF 1.4.

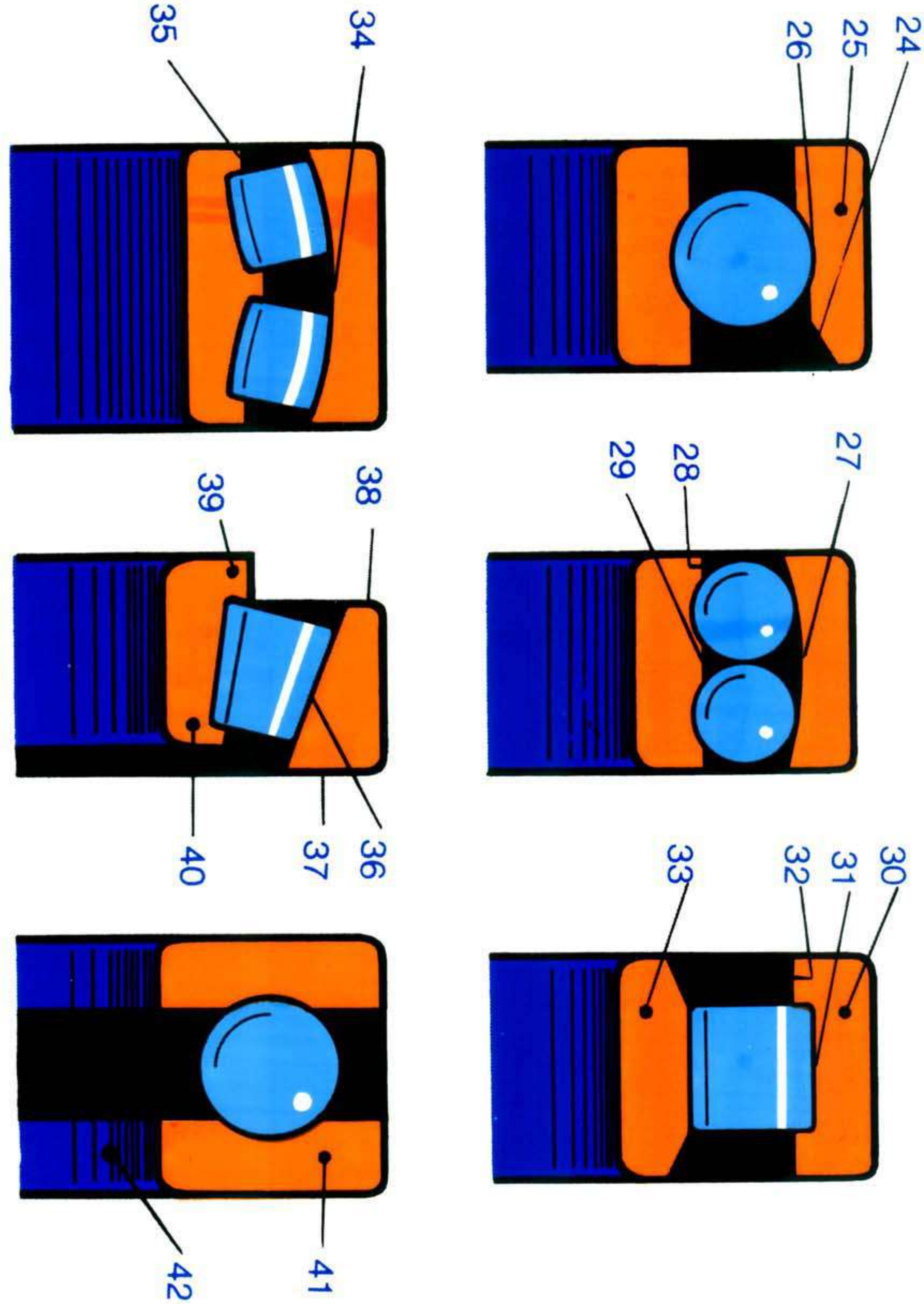

0

Paliers à roulement

Roulements à billes	Roulements à rouleaux
Roulements rainurés à billes	Roulements à rouleaux cylindriques
Roulements à billes à contact oblique	Roulements à aiguilles
Roulements à billes à rotule	Roulements à rouleaux coniques
Roulements à billes et à épaulement	Roulements à rouleaux à rotule

Butées à billes	Butées à rouleaux
Butées à billes à simple effet	Butées à rouleaux à rotule
Butées à billes à double effet	

Einteilung der Wälzlager

0

محمل مقاوم للاحتكاك

محمل اسيطينات

محمل قطرى

- محمل اسيطينات اسطوانى
- محمل ابرى
- محمل اسيطينات مخروطى
- محمل اسيطينات تأرجحى

محمل محورى

- محمل اسيطينات تأرجحى – محورى

محمل ذو كريات

محمل قطرى

- محمل اخدودى ذوكريات
- محمل مائل ذوكريات
- محمل تأرجحى ذوكريات
- محمل كتفى ذوكريات

محمل محورى

- محمل اخدودى ذوكريات – محورى بفعل فردى الجوانب
- محمل اخدودى ذوكريات – محورى ثنائى الفعل

1. Maschinenelemente - Wälzlager

Konstruktive Gestaltung der Lagerstelle
Festlager, Loslager, Stützlager

FR-MALF 1.6

0

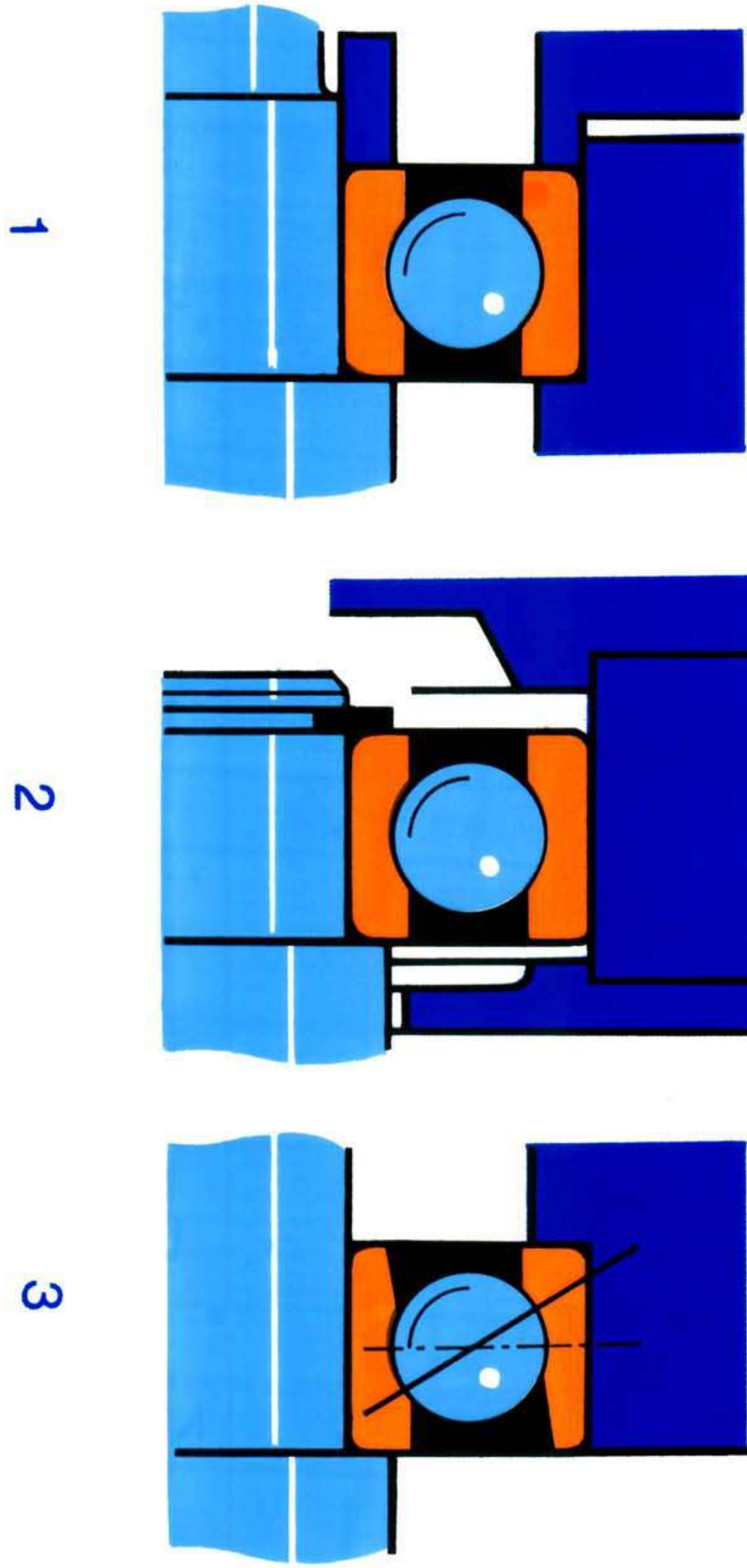

1. Maschinenelemente - Wälzlager
Konstruktive Gestaltung der Lagerstelle
Axiale Festlegungen I

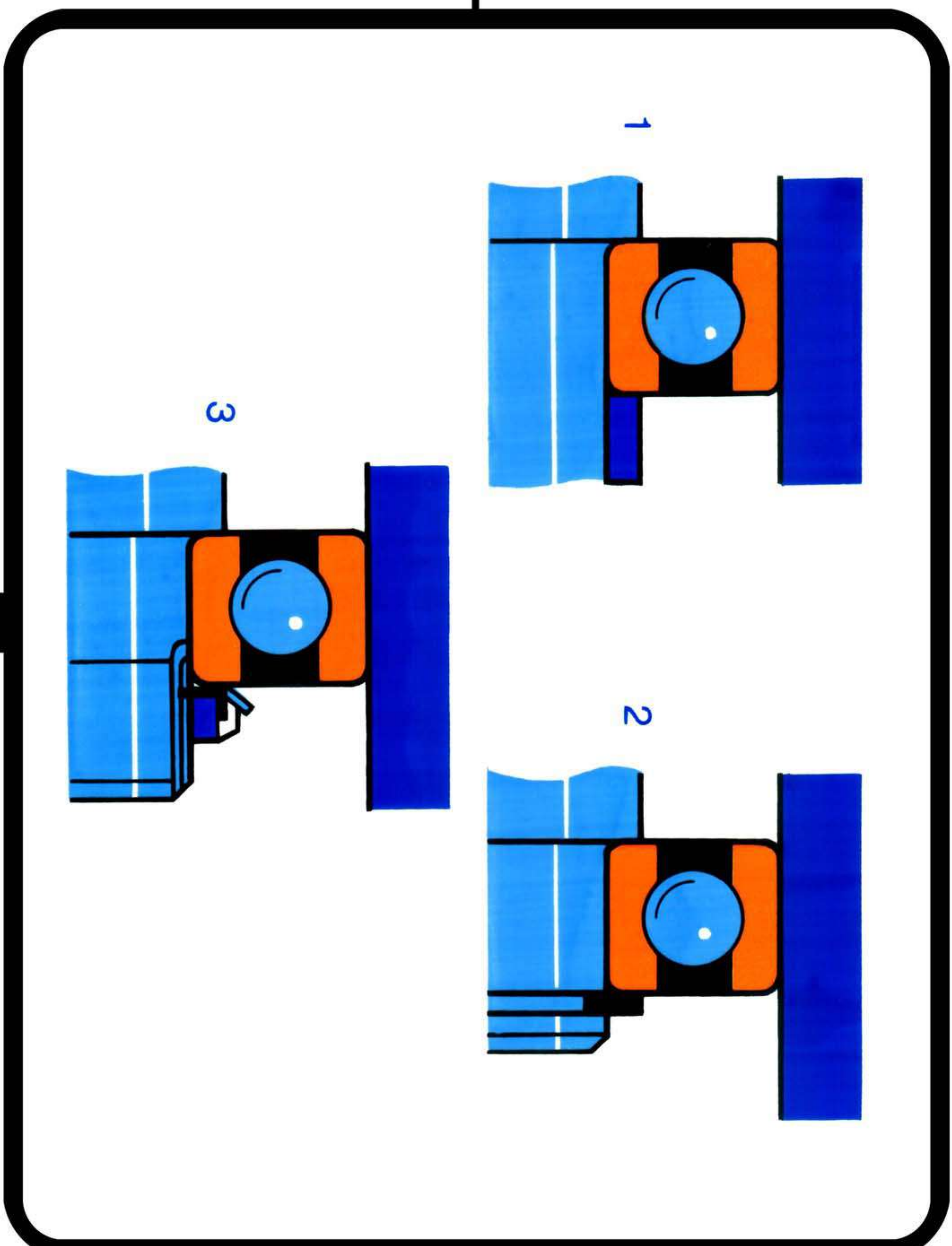

0

1. Maschinenelemente - Wälzlager

Konstruktive Gestaltung der Lagerstelle
Axiale Festlegungen II

FR-MALF 1.8.

0

1

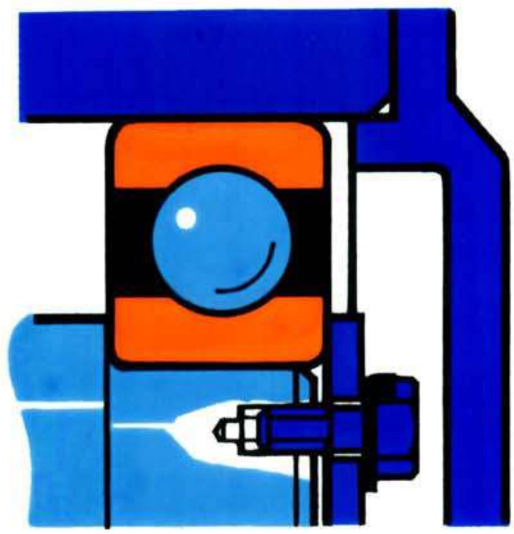

2

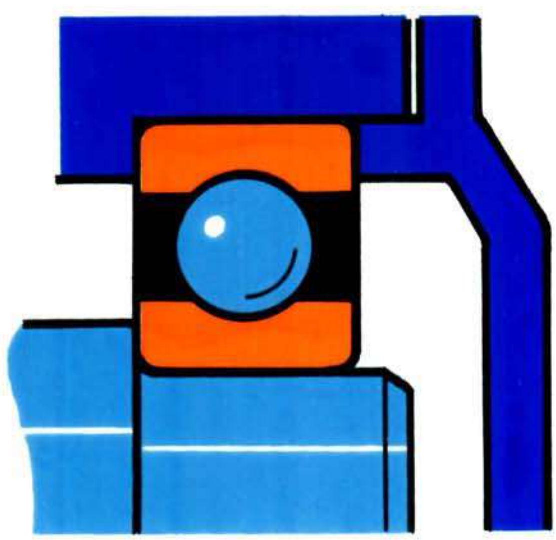

1. Maschinenelemente - Wälzlager

FR-MALF 1.9.

Konstruktive Gestaltung der Lagerstelle
Axiale Festlegungen III

0

1

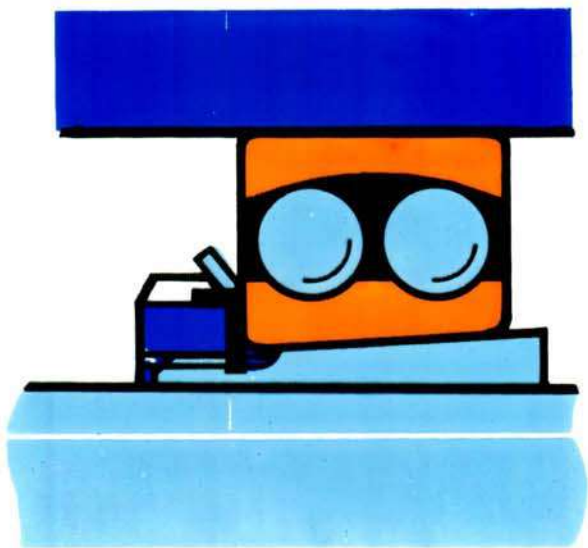

2

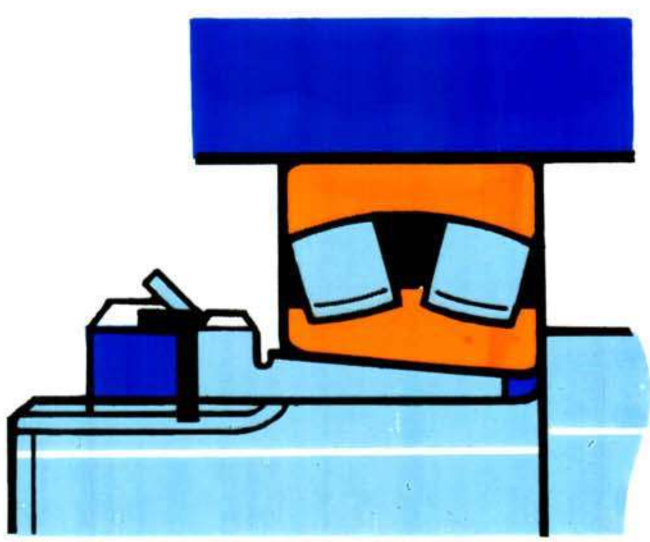

1. Maschinenelemente - Wälzlager
Konstruktive Gestaltung der Lagerstelle
Zwischentrieb

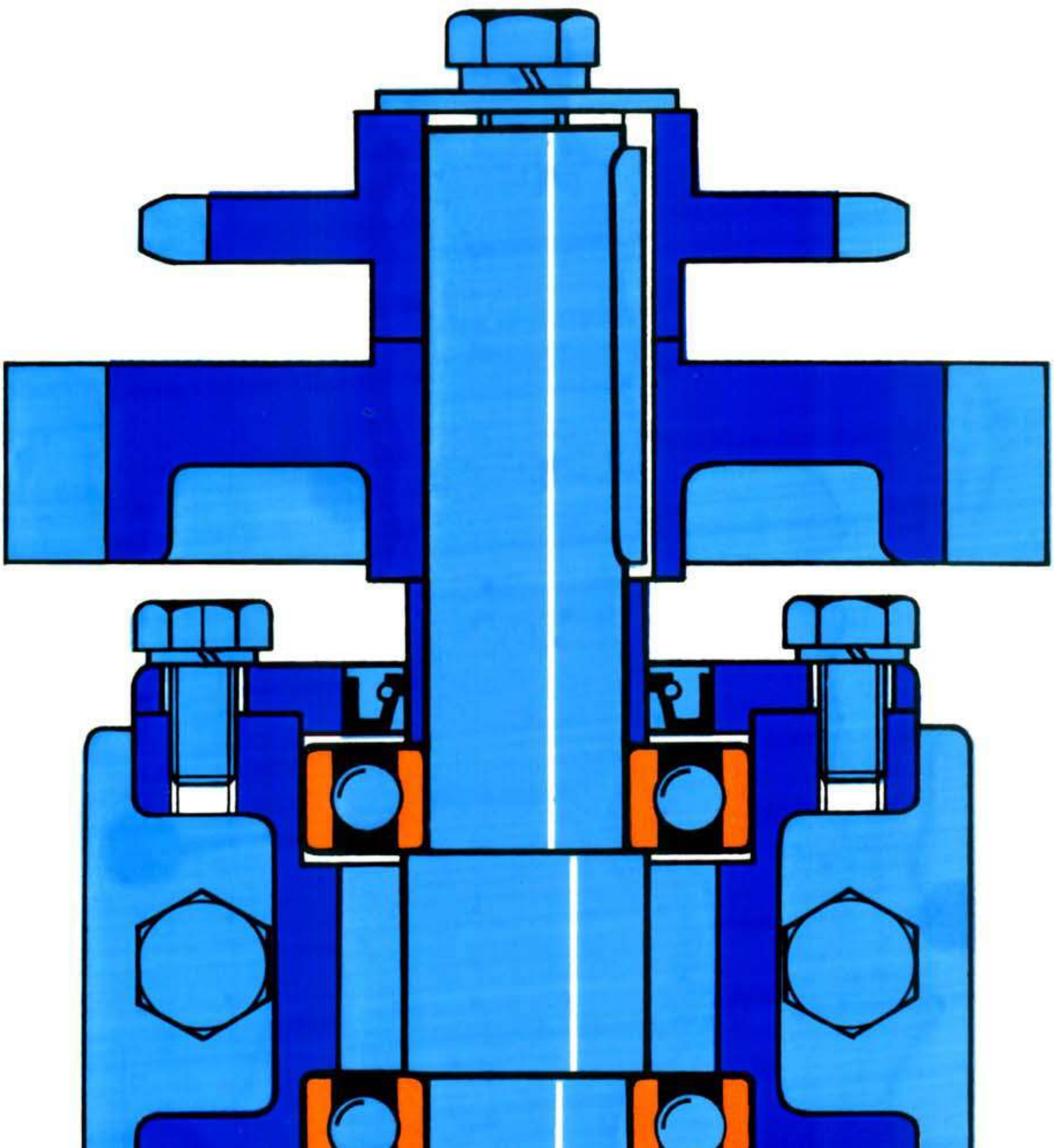

1. Maschinenelemente - Wälzlager

Einbau - Gegenüberstellung richtig/falsch

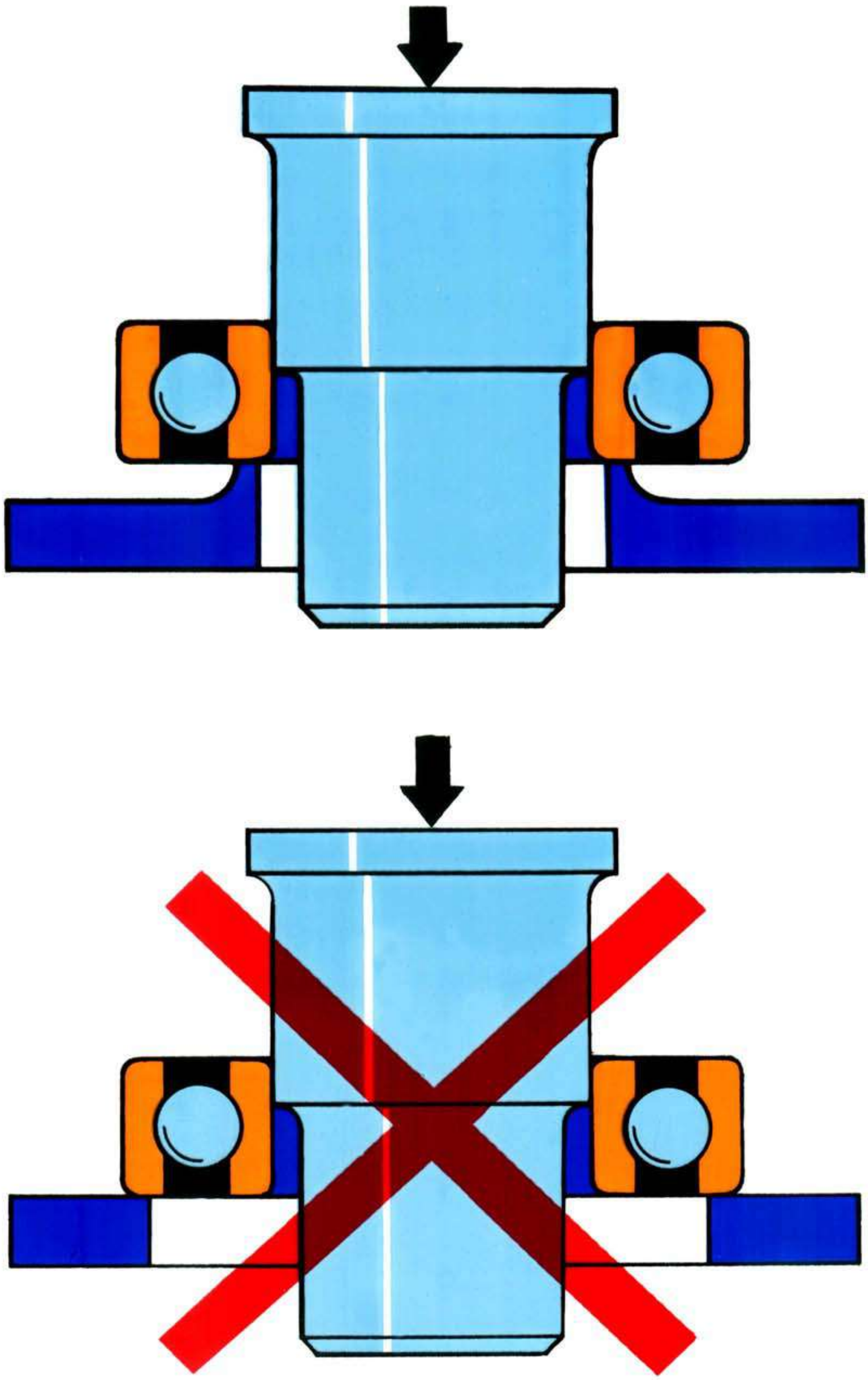

0

1. Maschinenelemente - Wälzlager
Einbau - Montagebüchse, Montagescheibe

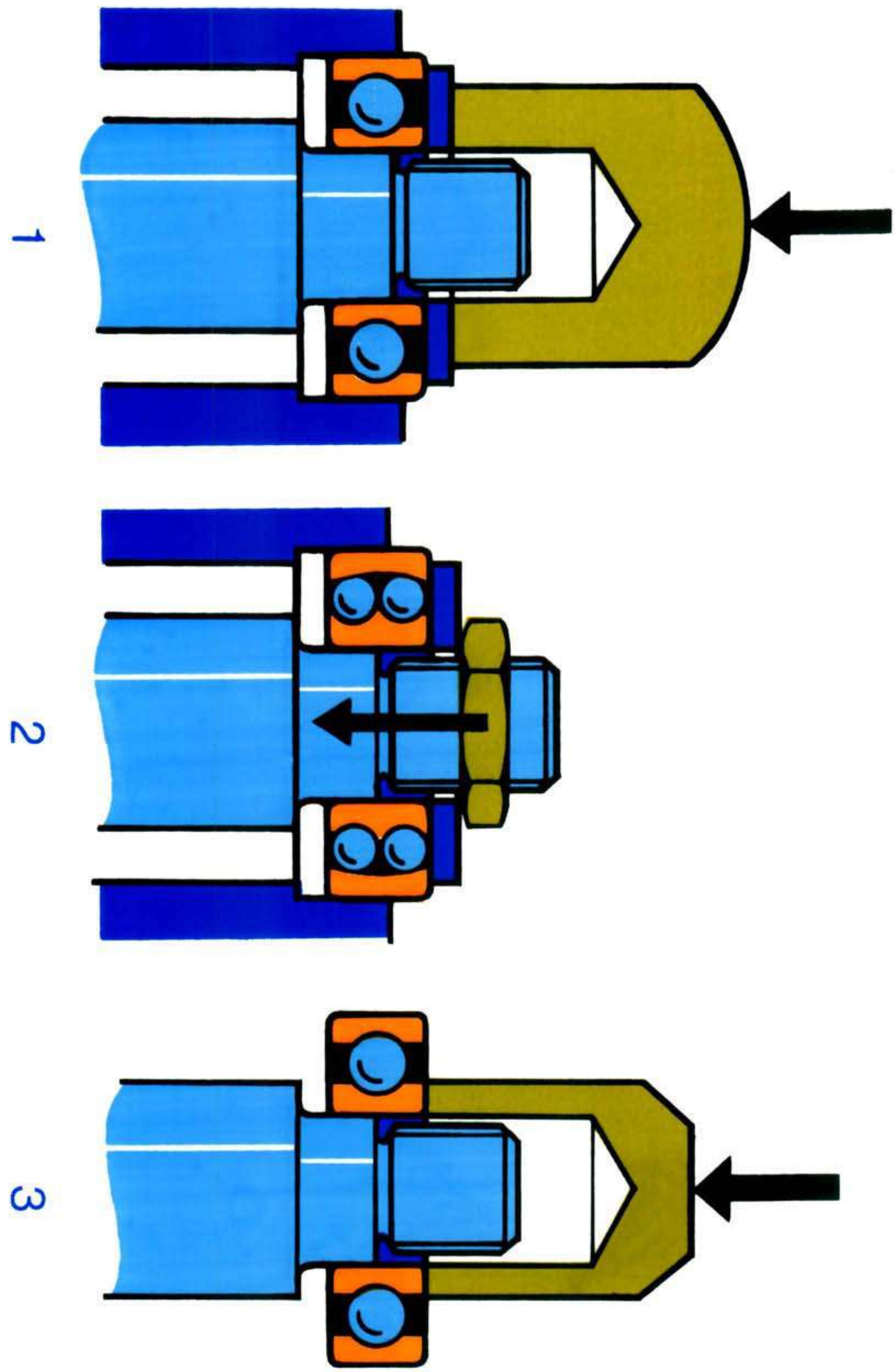

1. Maschinenelemente - Wälzlager

Einbau - Hydraulikmontage

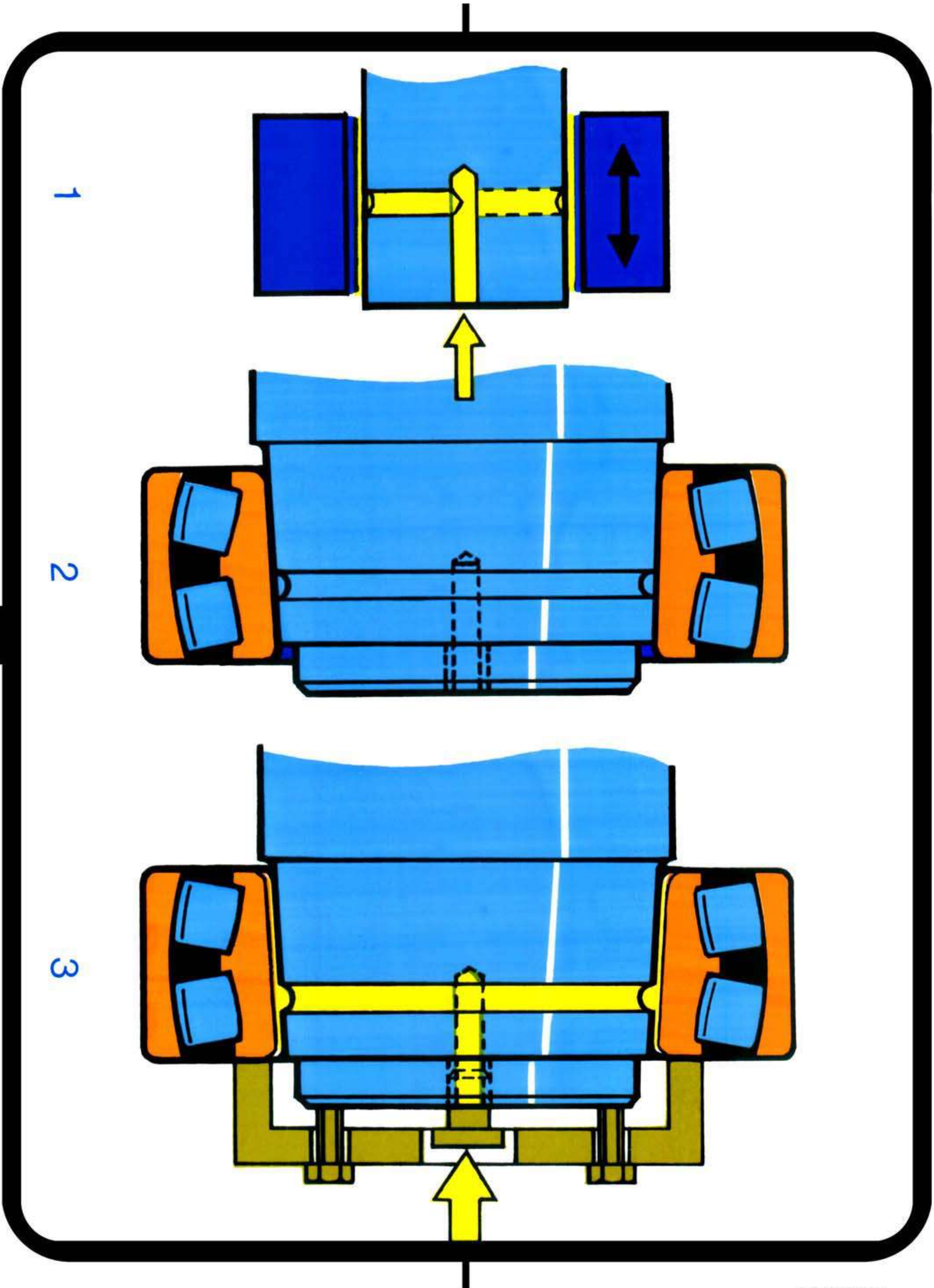

1. Maschinenelemente - Wälzlager

Ausbau - Abziehvorrichtung. Auspreßvorrichtung

0

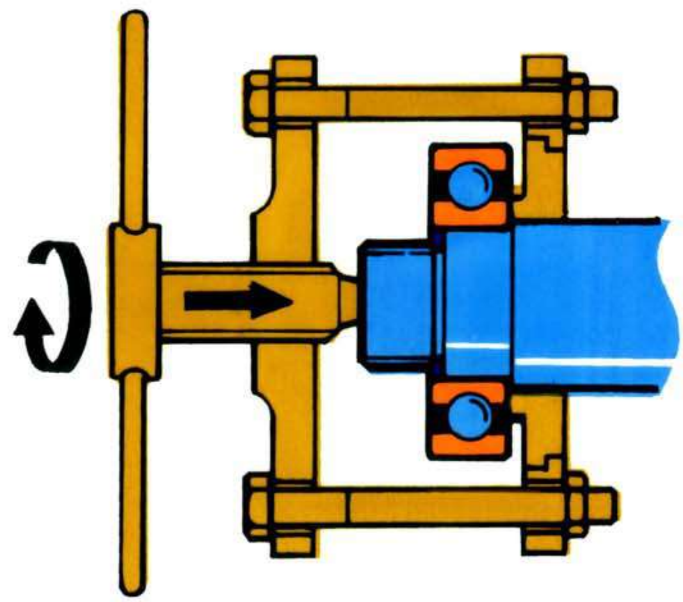

1

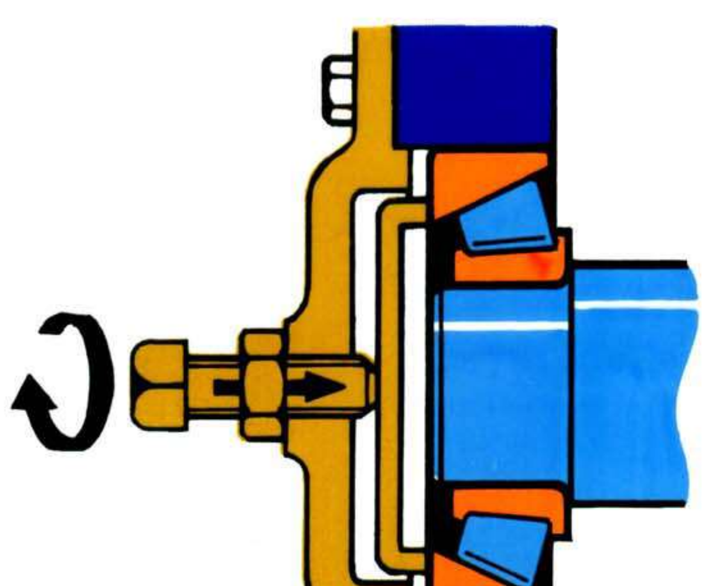

2

1. Maschinenelemente - Wälzlager

Ausbau durch Schlag, mittels Abziehülse, hydraulisch

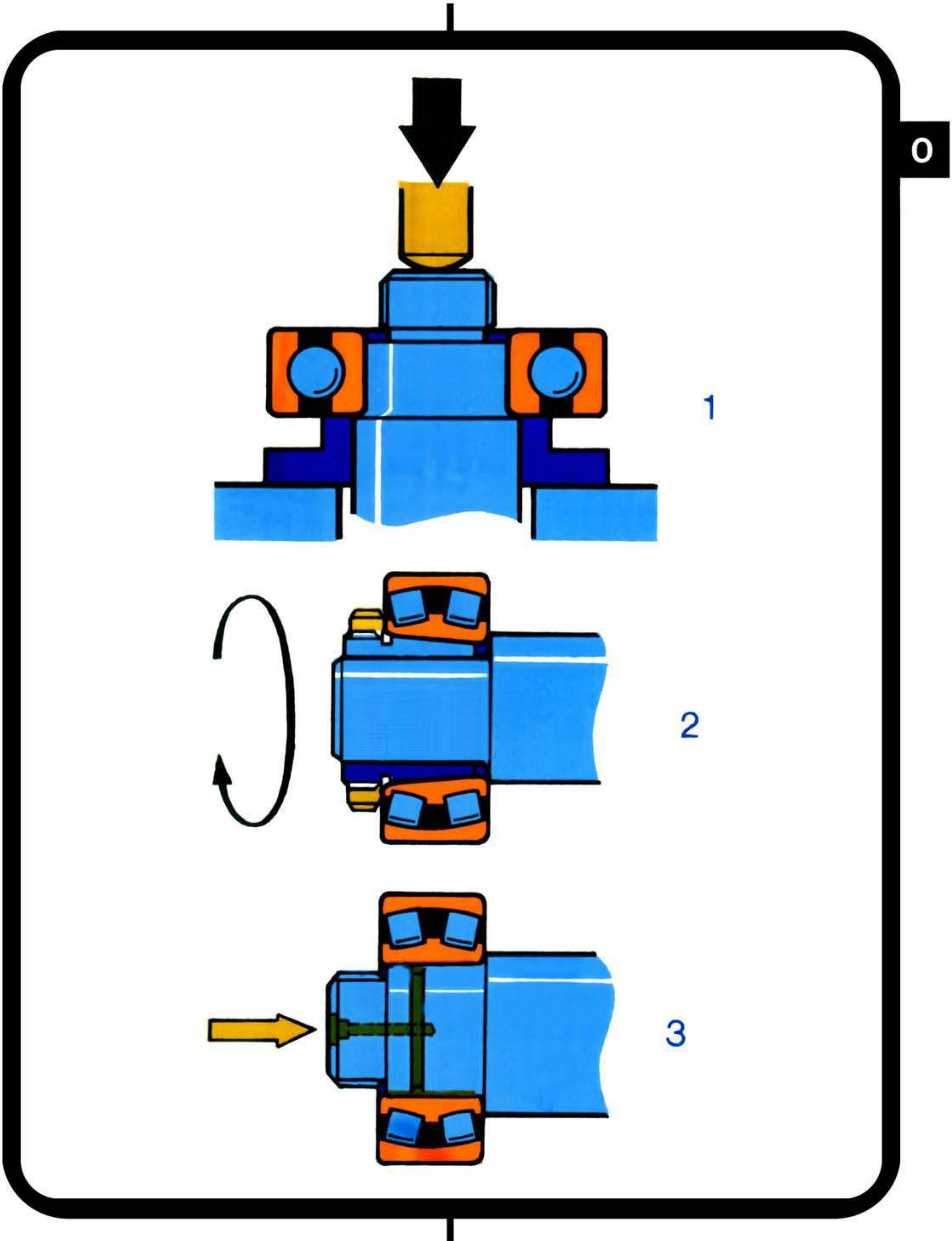

METAL

Series of transparencies

Basic skills in metal working

10.1

ibe PROFacto

Series of transparencies

Basic skills in metal working

10.1

This series of transparencies was elaborated by a team of authors under the auspices of the Zentralstelle für Bildungswesen des Schwermaschinen- und Anlagenbaues:

Dipl.-Päd. Günter Aisch
Dipl.-Ing. Dieter Bonitz
Dipl.-Lehrer Wolfgang Dost
Dipl.-Lehrer Rainer Hofbauer
Dipl.-Lehrer Bernd Müller
Ing.-Päd. Gerhard Näther
Dipl.-Ing.-Päd. Harry Richter, head of the team of authors

Graphic design:
Günter Brabant, film graphic artist
Award winner in the GDR

Editorial revision:
Günter Zweynert Oberlehrer Dipl.-Ing.paed. Ing.

Published by:
Zentralstelle für Bildungswesen des Schwermaschinen- und Anlagenbaues
[redacted]-7010 Leipzig, Barfussgässchen 12

Orderer:
Institut für berufliche Entwicklung
[redacted] - 1080 Berlin, Französische Strasse 47

1. Notes on the series "Basic skills in metal working"

When training people for occupations in the metal-working industry, the acquisition of work experience, abilities and skills in manual and simple mechanical metal-working is of fundamental importance.
The work techniques

- scribing
- measuring and testing
- sawing
- shearing
- drilling and countersinking
- threading
- filing
- bending and straightening

are taught in complex assignments.

The series "Basic skills in metal-working" is suitable both for imparting knowledge and for developing the ability of trainees within the framework of polytechnical training and for consolidation and revision purposes further vocational training.

When designing the transparencies, great importance was attached to the use of coloured and perspective representations of the technical and technological relations and facts.

Despite the necessary simplification, scientifically based information is given.

For reasons of economy, the transparencies have been designed in A 4 format and are kept in a folder together with technical and methodical notes.

The transparency cases are ideal for keeping personal notes and additional self-made covering sheets which are used with the transparencies.

For proper placing of the transparencies on the overhead projectors in upright size or broadside format, a simple frame has been enclosed with the series. The three-point arrangement of the frame (narrow side to the left) allows proper fixing of the covering sheets in the supporting system.

The covering sheets can easily be adjusted to size and allow the teachers to provide additional information or to vary their presentation of information. The original transparencies are not damaged by this. To help make the plastic covering sheets true to size, markings have been provided on the edge of the sheets (short vertical or horizontal strokes).

In the technical notes, no information about health protection, industrial safety or fire prevention has been given. For information of this type, see the relevant regulations and specialized literature.

List of projection films on "Basic skills in metal-working"

m no.	Film title
1	Tidiness at the workplace
2	Sawing by hand
3	Selection of saw blades
4	Power hacksaw
5	Sawing work
6	Shearing
7	Clearance of cutting edges in shearing
8	Shearing and punching
9	Holding and guidance of the scriber
10	Scribing
11	Punching
12	Twist drills
13	Drillings
14	Bench-type drilling machine
15	Countersinking
16	Internal threading
17	External threading
18	Calculation of length subject to bending
19	Bending in vice I
20	Bending in vice II
21	Straightening of workpieces
22	Measuring with a vernier caliper
23	Testing of components
24	Testing with form gauges
25	Design and use of files
26	Types of file
27	Filing I
28	Filing II

3. Notes on the transparencies

Film no. 1

Tidiness at the workplace

An essential task of polytechnical training is educating the trainee to achieve order and discipline. The first transparencie of this series allows the teacher to inform the trainees from the first lesson on how to arrange their workplace most suitably thus contributing to tidiness at the workplace.
The arrangement and selection of tools and testing instruments depends to a large extent on the work to be done.
For this reason, the arrangement of the tools and testing instruments on the work table should be considered only as an example. The arrangement of tools in drawers depends on the number and type of the tools.
It is essential that the attention of the trainees be drawn to the importance of properly placing and preparing tools and testing instruments for high-quality work.

Film no. 2

Sawing by hand

The transparency shows the initial sawing of a flat steel with a hand hacksaw and, in a magnified section two saw teeth cutting into the steel.
In this way basic knowledge from the manual training, such as the design of the hand hacksaw, can be revised and consolidated.
Using this transparency, the following crucial points can be dealt with:

- Clamping of a workpiece (maximum dimension is in the direction of cutting, rigid clamping)
- Clamping of the saw blade (the teeth point in the direction of cutting - red arrow -)
- Initial sawing under a small lead angle
- Geometry of the cutting edge.

It is advisable to mark the individual angles at the saw tooth with different colours and to explain these using a self-made covering sheet.

Film no. 3

Selection of saw blades

The selection of saw blades is mainly governed by the tasks to be fulfilled.
The transparency is intended to help the trainee to recognize the saw blades by their pitch (spacing between crests) and to select them according to the material to be worked and in accordance with its properties.
In three magnified sections, a coarse, a medium and a fine pitch can be distinguished. The teacher should take this opportunity of explaining how the selection of saw blades should be made according to the material to be worked:

Section 1: fine saw pitch for
- thin-walled workpieces such as pipes, sections, etc.
- hard materials such as alloyed steels and cold formed materials such as wires, sheets and plates etc.

Section 2: coarse saw pitch for
- soft materials where a large number of cuts can be expected, such as aluminium
- plastic materials such as thermoplastic material, etc.

Section 3: medium saw pitch for general workshop use.

Film no. 4

Power hacksaw

In this transparency, the power hacksaw is shown as a diagrammatic sketch. In a magnified section the operating princip: of the sawing process is illustrated. The following can be acquired by the trainee:

- Design and operating principle of a power hacksaw (crank drive)
- Clamping of the workpiece
- Drawing mode of operation
- Load of the saw frame and
- Altering the cutting pressure by shifting the weight on the saw frame.

Film no. 5

Sawing work

Two examples of special sawing work are given. In example 1 the trainees are informed about the sawing of deep cuts with the saw blade turned by 90°. Example 2 shows the sawing of pipes in prismatic clamping jaws. The hand hacksaw is not shown. It should be pointed out that when sawing pipes the pipe must be turned several times in order to avoid tooth breakage and uneven cutting. In both examples, the function of the clamping jaws which are used must be dealt with.

Film no. 6

Shearing

Sheets and plates as well as flat and sectional bars can be cut by shearing, while scribing can be adhered to precisely. This requires knowledge of the shearing process. The relevant transparency shows the operating principle of shearing in a simplified way.
The two shear blades with the conical cutting edges and the holding down clamp with the workpiece can be seen.
The acting forces are marked by red arrows. A distinction must be made between the absorption of force by the holding down clamp and the continuously acting cutting forces of the shear blades.
The workpiece is shown in the phase of bending and initial separation (slide planes form in the material).
In a magnified section of the area of cut, the trainees can see:

plate is pushed forward and is difficult to guide.
Note that the plate thickness in Figure 1 is magnified. In general, hand plate shears are only used for cutting thin sheets (e.g. steel sheet up to about 1 mm thick, aluminium sheet up to about 2 mm thick).
Figure 2 shows the punch (dark blue), the die plate (green) and the sheet strip (workpiece/lighter blue). In the die plate only the path of the punched material is indicated. The outline of the opening in the die plate has been omitted.
The opening in the die plate (lower die) can be illustrated in a self-made covering sheet.
The following form of representation is recommended (cf. transparency no. 7)

s = blade clearance
α = clearance angle

Film no. 9

<u>Holding and guidance of the scriber</u>

Transferring the shape and size of the workpiece according to workshop drawings to the starting material requires great care. The scribed lines must be clearly visible and must also remain visible during working. For this reason, scribing is often carried out with a scriber. Using transparency no. 9, holding and guidance of the scriber can be explained to the trainees. The accuracy of the size of the workpiece is determined mainly by the quality of scribing.
Instruction in careful, scrupulous work and care of the scribing tools is the essence of this transparency.

Film no. 10

Scribing

Before scribing bores, one or two reference edges are required. The reference edges of the workpiece (underlined in red) can be derived from the simplified technical drawing (dimensioning from 2 reference edges).
The fitting of the try square to the prepared reference edges is shown. The teacher should demonstrate how the dimensions must be plotted from the right-hand reference edge using the steel measuring tape.
Scribing is done using the scribing point. This scratches the surface of the workpiece. A considerable notch effect is caused by the sharp base of the scribed line, causing concentrations of stress which have several times the value of normal stresses. Therefore this danger must be indicated during lessons. With soft materials or materials where the surface must not be damaged (because of the corrosion hazard), scribing points of brass or lead pencils should be used.
The transparency does not show whether or not the surface of the workpiece has been prepared for scribing. Whitening with whiting, coppering with copper sulphate or varnishing with scribing varnishes make the scribed lines easier to distinguish.
Using a concrete example from the works production, it should be shown that the shape to be scribed and the quantity play an essential part in the selection of the scribing process.

Film no. 11

Punching

Punching is the technique immediately subsequent to scribing. The punch provides a scribed line with controlling punch marks in order to control the scribed lines, which become less visible as work proceeds. Half of the control punch marks must be left on the work edge. Furthermore, centres of bores are fixed by punching. In practice, a distinction is made between marking-out punches (point angle 30 - 40^{o}) and centre punches (point angle 60^{o}) (see transparency).

Punching requires a lot of skill.
The punch must be inclined so that the position of the centre can be observed.
When the centre corresponds with the scribed centre, the punch must be held vertically; the side of the hand must rest on the workpiece. The punch must then be driven into the workpiece by a short vertical blow with a locksmith's hammer up to a weight of 250 g.

Film no. 12

Twist drills

The punched bore (see transparency no. 11) is drilled by means of a drilling tool and a drilling machine.
As a rule, standardized twist drills are used in practice. Twist drills above 10 mm in diameter are generally made with a taper shank (machine taper) and below 10 mm diameter with a cylindrical shank.
The transparency can be used both for showing the parts of the drill, the tool geometry and the parts of the drill point, and for revision, exercise purpose and checking progress.
The following can be seen on the two drills (top to bottom):

Left drill: diameter $>$ 10 mm
tang, taper shank of tool, mark recess (neck), body with principal cutting edge, flute and secondary cutting edges (margins)

Right drill: diameter $<$ 10 mm
cylindrical shank, body with principal and secondary cutting edges and flute.

Figure 1 shows the angles at the cutting edge of the drill.
The angle of lip clearance α, lip angle β and cutting rake γ must be explained. The relation of the cutting rake to the flute helix angle in connection with the material to be worked must be mentioned.
In Figure 2 the designations at the drill point, such as the principal cutting edge, helical flute, chisel edge angle of point, flank, web thickness (secondary cutting edge, margin not drawn) and the flank of the secondary cutting edge can be discussed.

In Figure 3 the point angle , which is formed by the two principal cutting edges, is marked. This largely depends on the material to be worked. For aluminium it is 130 - 140^{o}, and for steel approx. 118^{o}.
The point angle affects the service life of the drill's cutting edges. The two principal cutting edges must be of equal length in order to avoid drilling faults.
Explain to the trainees that labour productivity is increased by continuously improved drill points using commercial spiral drills. (e.g. centring grind drill).

Film no. 13

Drillings

Using this transparency, the purpose, use and special features of drilling can be dealt with and effective operating processes such as drilling with drill jigs ean be explained.
Figure 1 shows that it is advisable to pre-drill large holes. The pre-drilled hole serves as a guide and also relieves pressure from the chisel edge of the larger drill. Moreover, it helps prevent the drill from going off-centre.
The illustrated hole is a through hole.
Figure 2 shows a through hole.
Figure 3 shows a blind hole. The trainees should be instructed that, when determining the depth of the hole, one should not start at the drill hole point but at the cylindrical part of the hole.
Figures 4 and 5 show that a base is required for making a through hole so that the drill table is not damaged.

Film no. 14

Bench-type drilling machine

The transparency shows the design and operating principle of a commercial bench-type drilling machine in section.
The trainees should by familiarized with the design and operating principle of the machine step by step. The coloured representation of the most important assemblies is of great assistance and allows trainees to draw conclusions regarding

the modular unit principle of machine tools.
It is advisable to trace the direction of force lines from the driving motor via the belt drive to the drill spindle and the tool.

The trainees should make use of their prior knowledge.
The most important assemblies shown are:

- electric motor as drive
- cone pulley drive
  (other types are equipped with gear drives)
- drilling spindle with feeding mechanism and chuck
- drill table for holding workpieces
- column to support the assemblies.

Film no. 15

Countersinking

With this transparency the trainees are given a survey of the most important countersinks and can classify countersinking into the systematics of manufacturing processes. Countersinking is a technnique in which pre-drilled or cored holes are bored and their faces worked.
This is illustrated by four examples.

Figure 1 Counterbore and counterboring tool with pilot
The counterbore is used for countersinking cylindrical recesses (bolt head reception). The fixed or exchangeable pilot pin guides the counterboring tool with pilot.

Figure 2 Tapered countersink (countersinking cutter)
Tapered countersinks are used for taper countersinking and for deburring. The angles of taper correspond to the standardized countersunk angles of bolts and rivets and are of 60^{o} or 120^{o}. The spacing of the cutting edges is non-uniform in order to avoid the cutting edges from digging in.

Figure 3 Counterbore with spiral flutes
Counterbores with spiral flutes are used for boring cored holes. It is clear from the picture that counter-bores with spiral flutes are provided with several

principal cutting edges, in most cases 3, more seldom; this allows smooth running.

Figure 4 Centre drill

The centre drill is a combination of a single-edged drill and a centre reamer or form countersink and is used for centring workpieces as a preparation for turning. The cutting edge angles of the countersinks have been indicated and should be supplemented by the standardized numerical values.

The trainees should be made aware that in countersinking too there is a rotating primary motion and a straight-line feeding motion.

Film no. 16

Internal threading

This transparency shows the preparation of a bore with internal thread in four steps.

Step 1 Preparation of a core hole

The core hole is prepared with the spiral drill using a table drilling machine. The diameters of the core hole bores are standardized. If the core hole is excessively large, the thread is not sufficiently cut (Refer to the use of chart books or standards, the selection of the correct diameter of spiral drill and checking by means of a vernier caliper).

Step 2 Spot-facing of the bore

The core hole bore should be spot-faced up to the nominal thread diameter by a 60^{o} conical countersink.

Step 3 Entering tapping of the internal thread

The entering tap must be applied at right angles to the workpiece surface on all sides and turned into the core hole bore with low feeding power.

The marked start of cut should be observed when determining the depth of the core hole in a blind hole bore.

Step 4 Plug tapping of the internal threading

The plug tap is initially turned in by one hand. Once insertion into the entering tappings of the thread is secured, the tap wrench can be put on and the thread can be plug tapped.

In magnified sections the quantity of chips is shown which is obtained in internal threading.

The trainees should be instructed that the chips are to be loosened and broken by alternately turning forward and backward.

The trainees must recognize by means of practical examples how important standardization is for the national economy.

Film no. 17

External threading

A simple cutting die is shown on the transparency. This cuts an external thread on a bolt.

The design of the cutting die should be explained:

- Cutting die holder (shown in green) with outlined threaded pins (holding screw, 2 thrust bolts and 2 spreading screws).
- Cutting die with 4 cutting edges: spot-faced at 60° on both sides. The start of the cut has alength of 1.25 to 1.5 times the pitch. Cutting dies are made of tool steel (shown in bluish-grey).

As compared with internal threading, external threading has the following special features:

- Before using the cutting tool, the bolt head must be chamfered and, if necessary, filed so that it is crowned (top left).
- The thread is cut by the cutting die in one operation without interruption (cooling, lubrication, chip breaking and chip removal are necessary)
- After starting the cut, no more pressure should be exerted.

Film no. 18

Calculation of length subject to bending

Bending is the plastic change in the shape of a solid body and is used in a number of ways in the metal-working industry.

When forming a material, its volume remains constant. During bending, the material layers are stretched and upset. Since only the so-called neutral fibre retains its original length, it is used

for calculating the length subject to bending.
A bent workpiece is shown on the transparency in a very simplified way. The neutral fibre has been drawn in black. As a rule, it passes through the centre of gravity of the material cross-section (with symmetrical cross-sections it passes through the centre).

In order to illustrate stretching and upsetting to the trainees, a covering sheet can be placed within the range of length, l_3 to illustrate this in a grid structure.
In the case of a very small bending radius ($r < 5$ s) the bending radius is shifted towards the pressure side.
The formula for calculating the length subject to bending shown on the transparency only applies if the bending radius is r 5.
Using this transparency, a simple length subject to bending can be calculated.
This transparency is suitable for checking progress, etc.
For this purpose, the formula should be covered over.
Note that an example with a bending radius < 5 s has had to be chosen because of the design of the transparency.

Film no. 19
<u>Bending in vice I</u>

Sheets, strip and flat steels of small dimensions are angled or bent in a vice.
The transparency shows the angling of workpieces in the vice with two examples:

Figure 1 Sheets of low strength and parts with a free bending leg are bent with a wooden hammer. The blows should be applied near the bending edge. Shims with formed edges (not shown) give the desired form to the bending point. Shims of wood or other soft material prevent damage to the workpiece surface. Plastic yielding results in internal stresses which favour the formation of cracks.

Figure 2 When bending short free legs a block of hard wood or another softer material should be used together with a locksmith's hammer.
Direct blows with a locksmith's hammer would result in buckling of the workpiece edges and workhardening of the material.

Film no. 20

Bending in vice II

This transparency shows the rounding off of a workpiece in the vice in two figures.

Figure 1 Preliminary bending of a flat steel or sheet
The figure shows the phase pf preliminary bending over a mandrel (round steel or pipe).
Ensure that the workpiece is firmly clamped.

Figure 2 Finish bending
The finish bending of the pre-bent workpiece also proceeds in a vice.
Observe its resilience.
When bending soft materials use shims to prevent surface damage caused by the vice-jaws (shown in brown).

Film no. 21

Straightening of workpieces

Workpieces must be straightened in the case of

- distortion of the components after heat treatment in the production process
- distortion caused by transport or storage.

Its purpose is to restore the original shape, and it is essentially based on a displacement of material. Straightening requires great technical skill and theoretical knowledge about the structural constitution and stress distribution.
Using Figures 1- 3 essential basic knowledge can be gained using three examples.

Figure 1 Deformations in the centre of the sheet are eliminated by stretching by applying light, uniform circular, hammer blows, striking more densely towards the edge. For small sheet thicknesses and sensitive materials a wooden or rubber hammer should be used.

Figure 2 Edge stresses are eliminated in a simular way.

Figure 3 The buckled angle steel is aligned by stretching of the upset side.

Note: This method (one-sided stretching) can also be used to round off an angle steel.

Finally, bending and straightening should be compared with other production methods from the point of view of material economy.

Film no. 22

Measuring with a vernier caliper

The design and handling of the vernier caliper can be demonstrated efficiently with functionable models and the vernier caliper itself. This transparency is suitable for revision purposes and for learning the three basic possibilities of measuring with vernier calipers.

1 Measuring of external dimensions between the fixed and the movable leg

2 Measuring of internal dimensions by cross jaws - the measuring blades for internal measurement are aligned with the measuring faces for external measurement.

3 The depths of blind holes and grooves are measured by the depth micrometer (not shown in green).

In the magnified section, a part of the sliding member with the vernier and the beam millimeter divisions can be seen. The last scale division has not been drawn accurately; it must coincide with the scale division for 34 mm on the beam.

Film no. 23

Testing of components

The verbal statements in German must be translated for the trainees:

Testing	Measuring
Dimensional testing:	Gauging:
Non-dimensional testing:	Comparing with specimens:

The transparency shows the testing of components using selected examples.

In the lessons, the teacher should supplement the symbolic representation using actual examples from practice.

In the Section "Measuring" reference should be made to comparing the physical quantity to be measured such as length, temperature, work, etc. (measuring quantity) of the workpiece, components or machine with a known quantity of the same type such as unit lengths, scale divisions, etc.
The purpose of measuring is the numerical determination of a measuring value (measuring value = numerical value x unit of measurement).
The Section "Gauging" should illustrate that a component must be checked for observance of the actual dimension within a tolerance range (limit gauges) or that the form of a component approaches a specified form (form gauges).
Non-dimensional testing deals mainly with the comparison of specimens, such as comparing the sound of grinding wheels after slight bouncing (clear sound indicates proper condition), etc.

Film no. 24

Testing with form gauges

This transparency shows how to check the planeness of one or several faces and the angularity of a component.

Figure 1 Checking the angularity of a component with a thin steel try square.
The thin steel try square is shown here checking an angle of 90° on a component.
If there is angularity no gap is present when the thin steel try square is set on the surfaces to be checked (red).
(Mention the bevelled edge steel square).

Figure 2 Checking the planeness of the two bearing surfaces (red) of the component.
The hairline gauge has wedge-shaped ground measuring faces. The measuring edge is slightly rounded off. It is a high-quality testing tool and must be handled and used with care.
Typical testing patterns are found in testing. The handling of the hairline gauge when checking planeness must be explained (light gap method).

Film no. 25

Design and use of files

The transparency shows a double-cut flat file on a workpiece which is clamped in a vice.
The basic design of a file and its usage can be explained by means of this transparency:

- The shank of the file with the two cuts and the tang with the handle can be seen; conclusions can be drawn about the cross-section
- The magnified section shows the contour of the file teeth and the chip space during one stroke of the file. Owing to the angular ratios given the file can be assumed to be one used for steel working. Using a self--made covering sheet the geometry of the cutting edge can be shown, if required. But it is in any case clear that scraping is required.(negative rake angle).

The contact of the file on the workpiece shown and the distinguishable grooves in the workpiece should prompt discussion on the correct filing direction with reference to the workpiece edge and the quality required (see transparency no. 27)
Explain to the trainees that manual filing for repairs and assembly work is at present often more economical than the use of the corresponding machines.

Film no. 26

Types of files

The correct selection of files is important for high-quality filing.
Three characteristic types of file are shown:

1 Single-cut files	for soft metallic materials milled teeth
2 Double-cut files	for hard metallic materials cut teeth
3 Rasps (rasp cut)	for soft materials such as wood, etc.

The file teeth are clearly recognizable in magnified sections.

Film no. 27

Filing I

The teacher can explain the mode of operation when filing using four figures:

Figure 1 Rough filing is done if more than 0.5 mm material is to be removed

Figure 2 Cross stroke filing is required when a high degree of planeness is required.

Figure 3 Smoothing is done with longitudinal strokes

Figure 4 Filing of 2 work faces in one plane

Film no. 28

Filing II

Rough filing is compared with smoothing.

Figure 1 As a rule, only the motion of th arm should be used for filing.
When rough filing, the right hand has a guiding and feeding function while the left hand exerts pressure.

Figure 2 When smoothing and when using moderate sizes of file the left hand must assume the guiding function while the right hand is responsible for feeding.

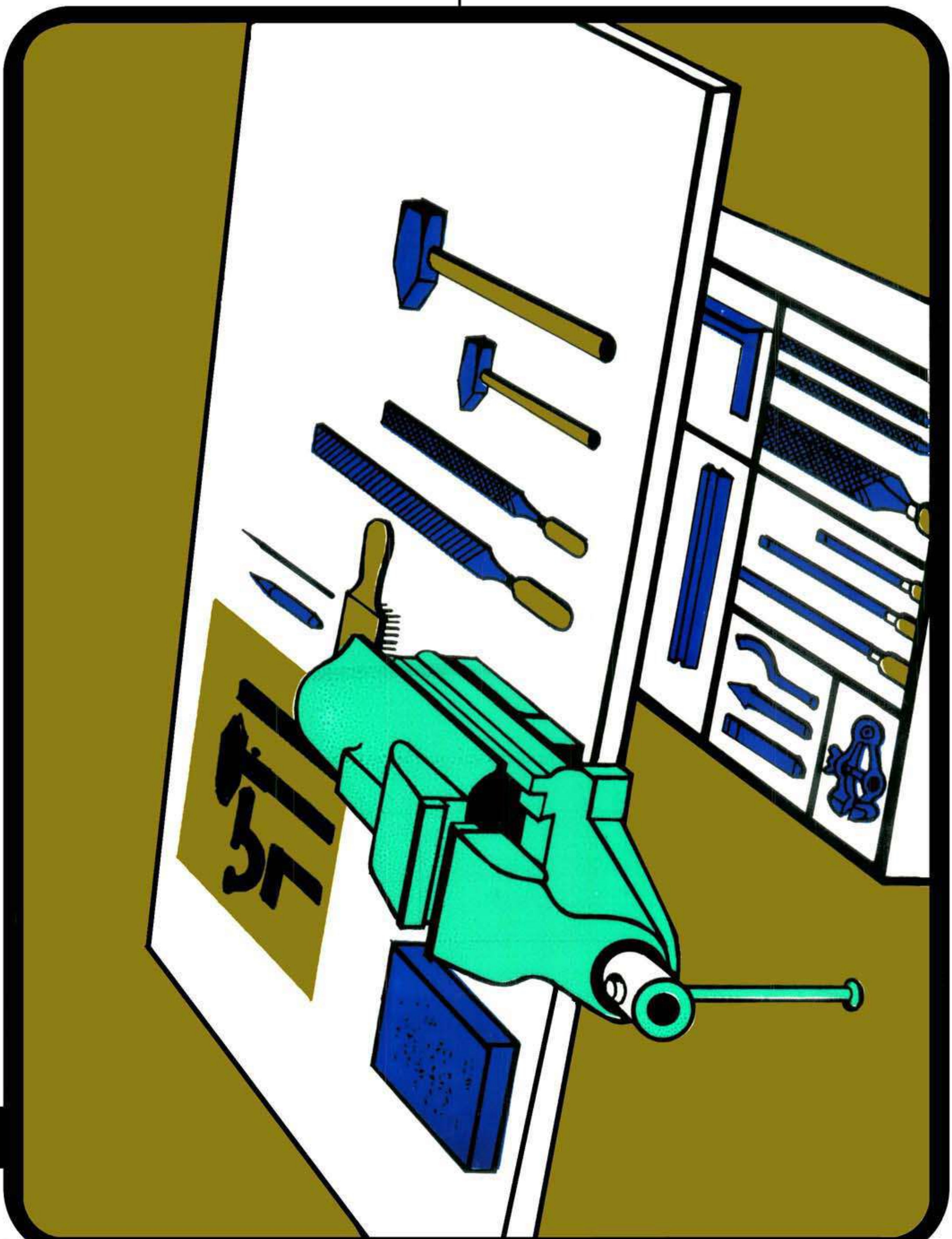

0

Ministerium für Schwermaschinen- und Anlagenbau
Zentralstelle für das sozialistische Bildungswesen

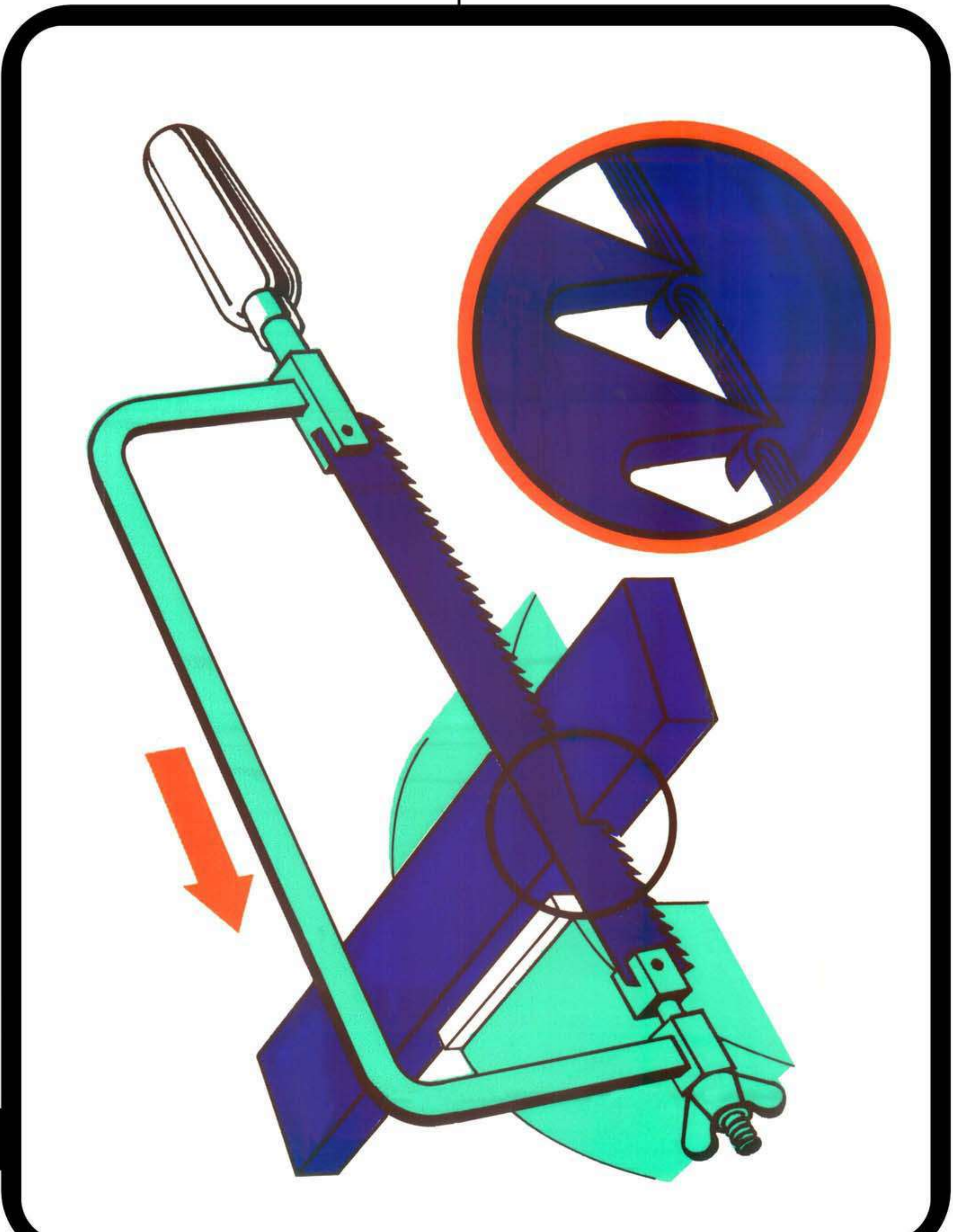

ZSB
Ministerium für Schwermaschinen- und Anlagenbau
Zentralstelle für das sozialistische Bildungswesen

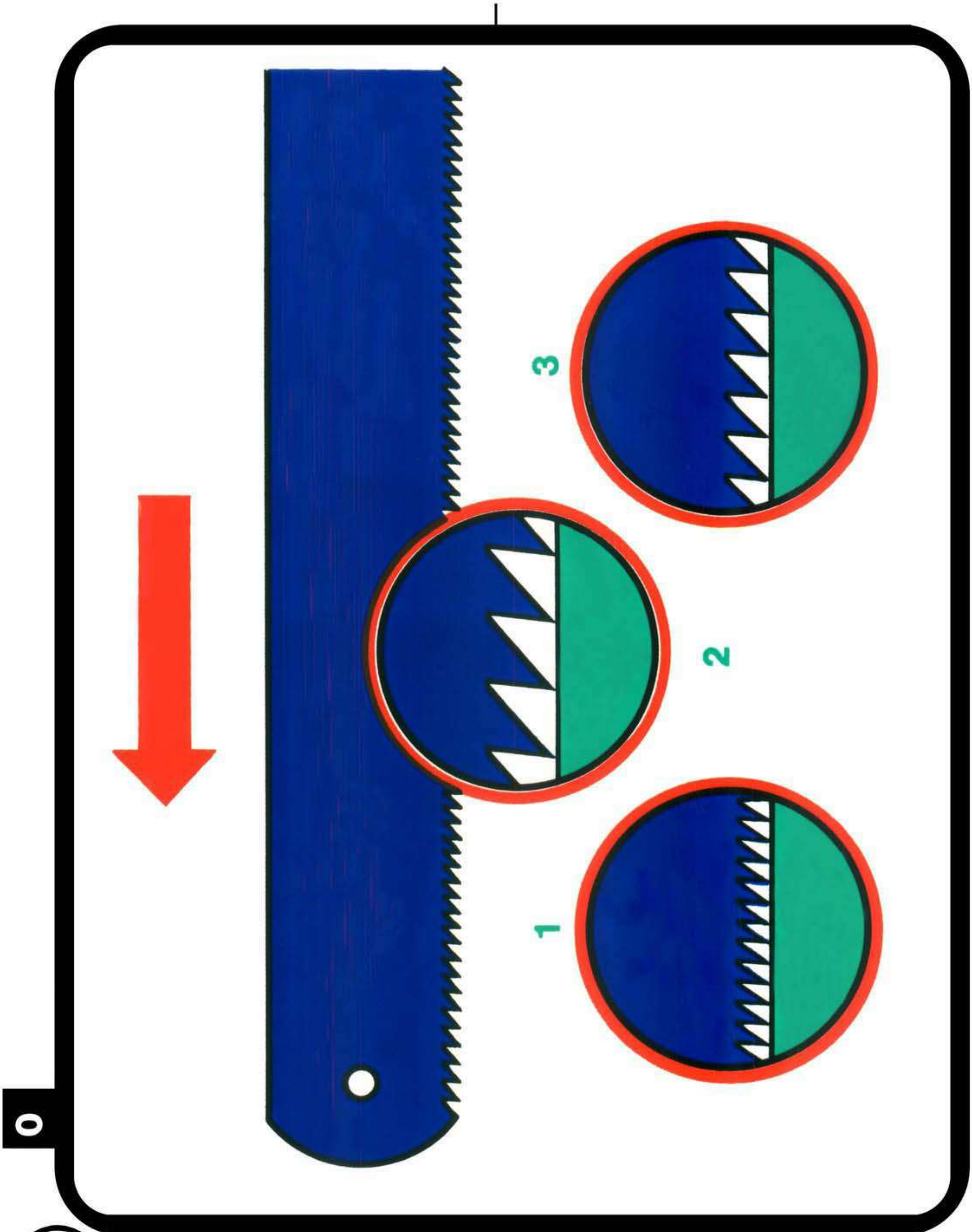

Ministerium für Schwermaschinen- und Anlagenbau
Zentralstelle für das sozialistische Bildungswesen
DEWAG
© Signograph

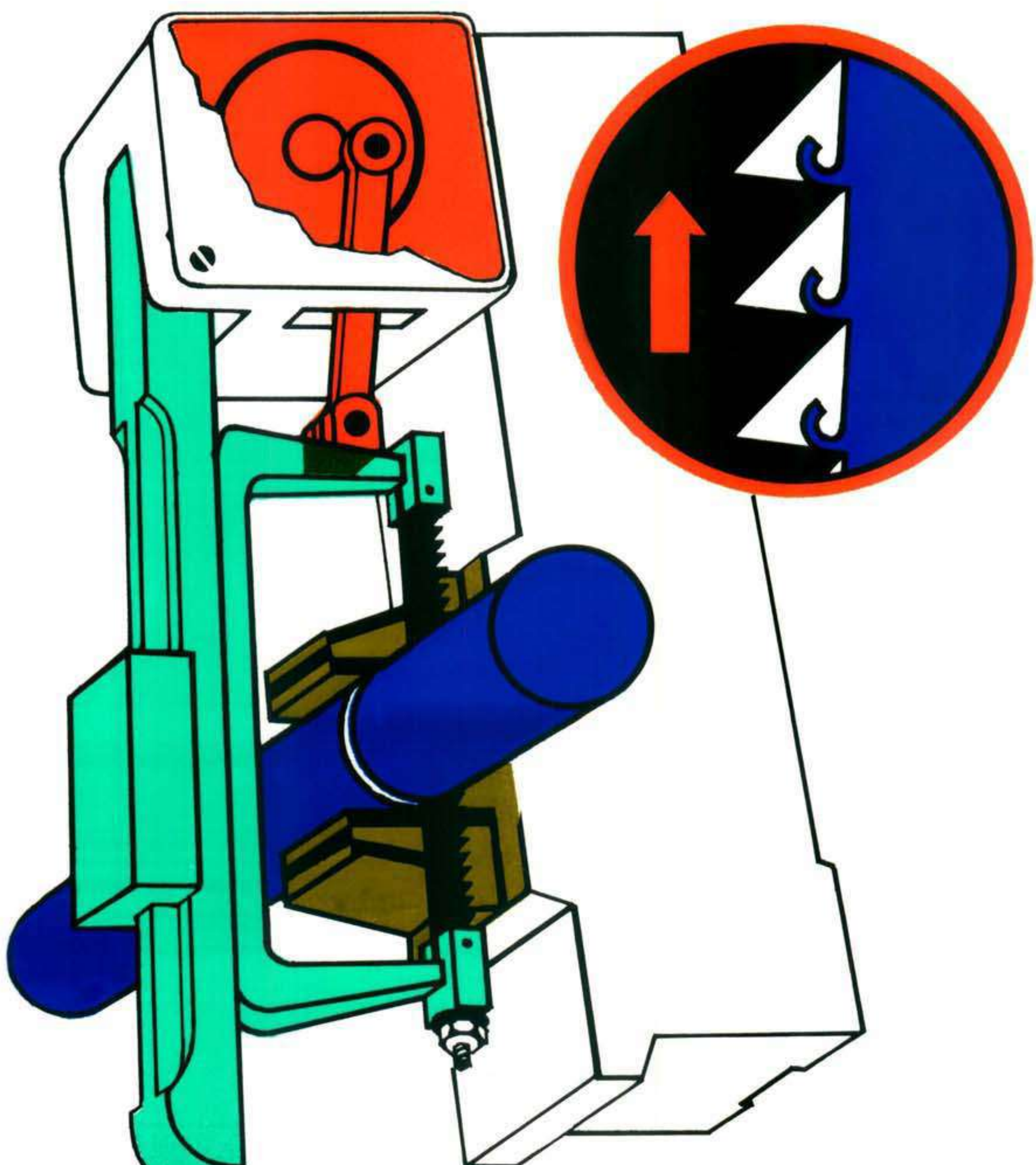

Ministerium für Schwermaschinen- und Anlagenbau
Zentralstelle für das sozialistische Bildungswesen

0

1

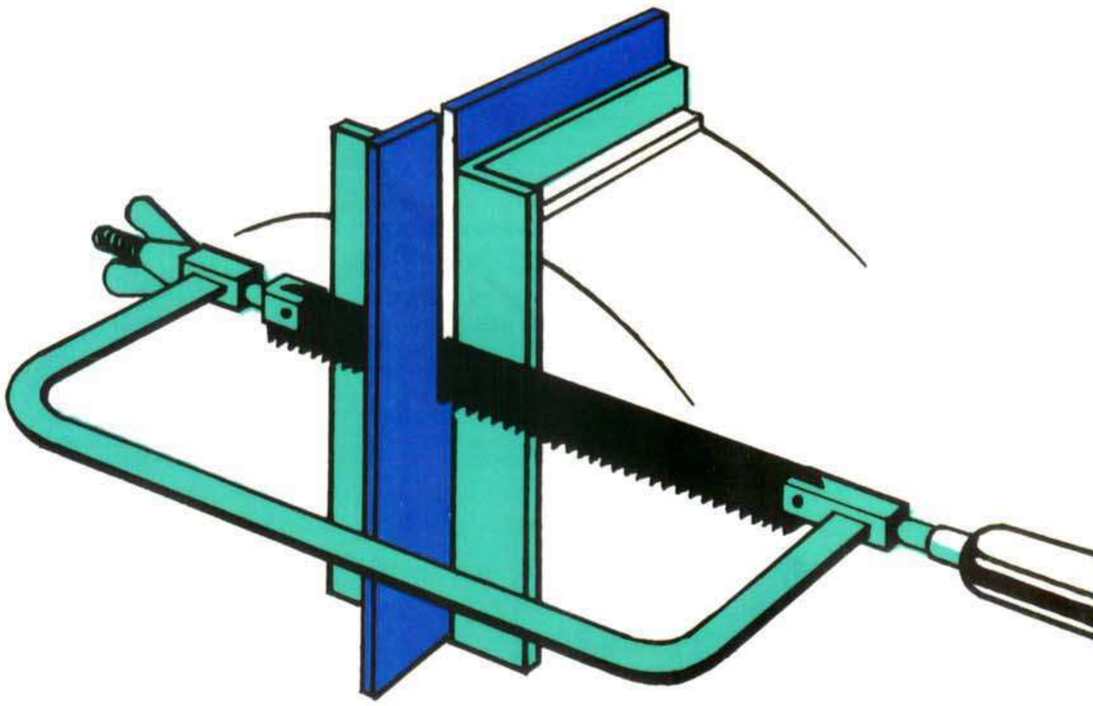

2

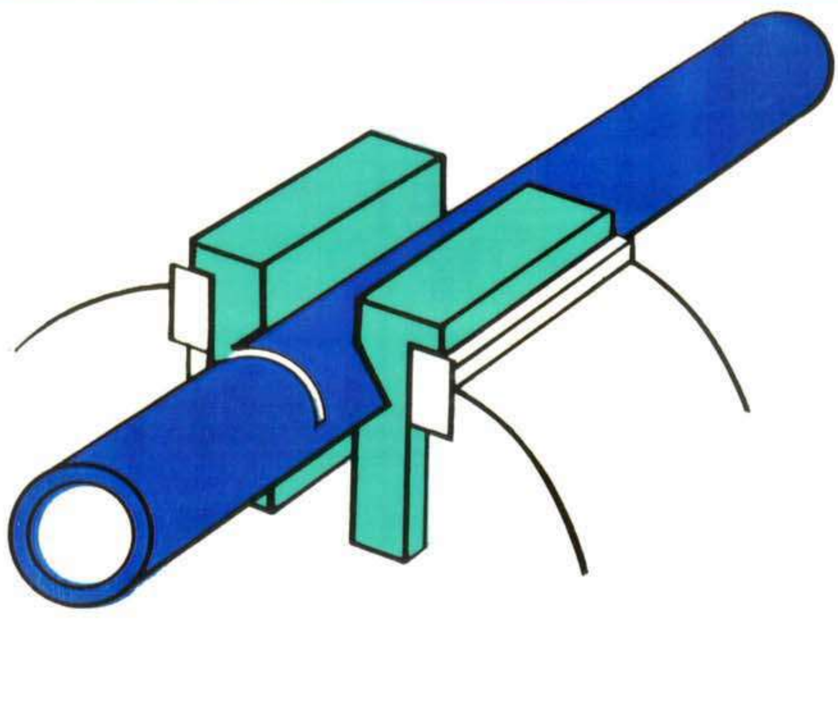

Ministerium für Schwermaschinen- und Anlagenbau
Zentralstelle für das sozialistische Bildungswesen

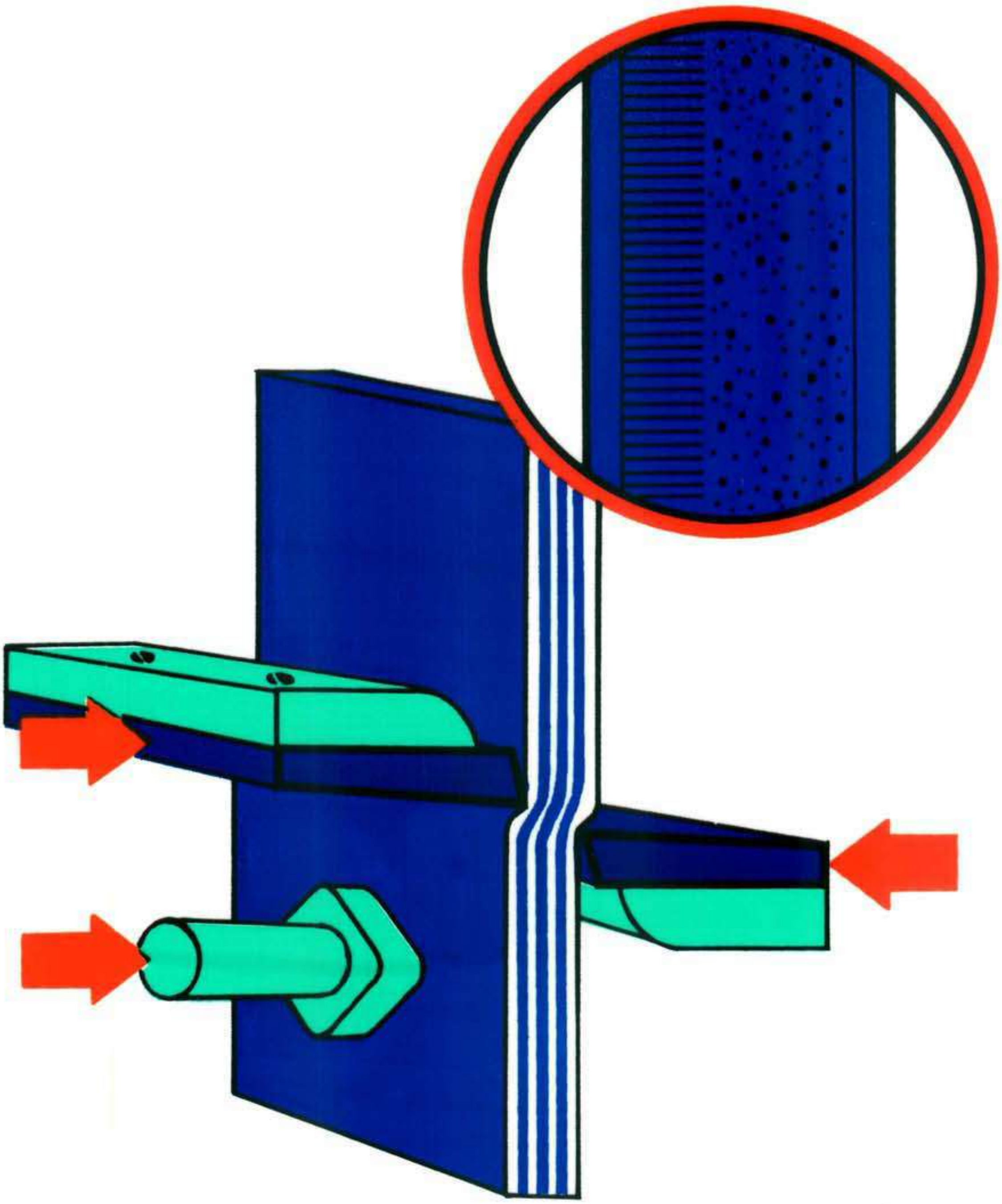

Ministerium für Schwermaschinen- und Anlagenbau
Zentralstelle für das sozialistische Bildungswesen

DEWAG
© Signograph

Schneidenspiel beim Scheren

0

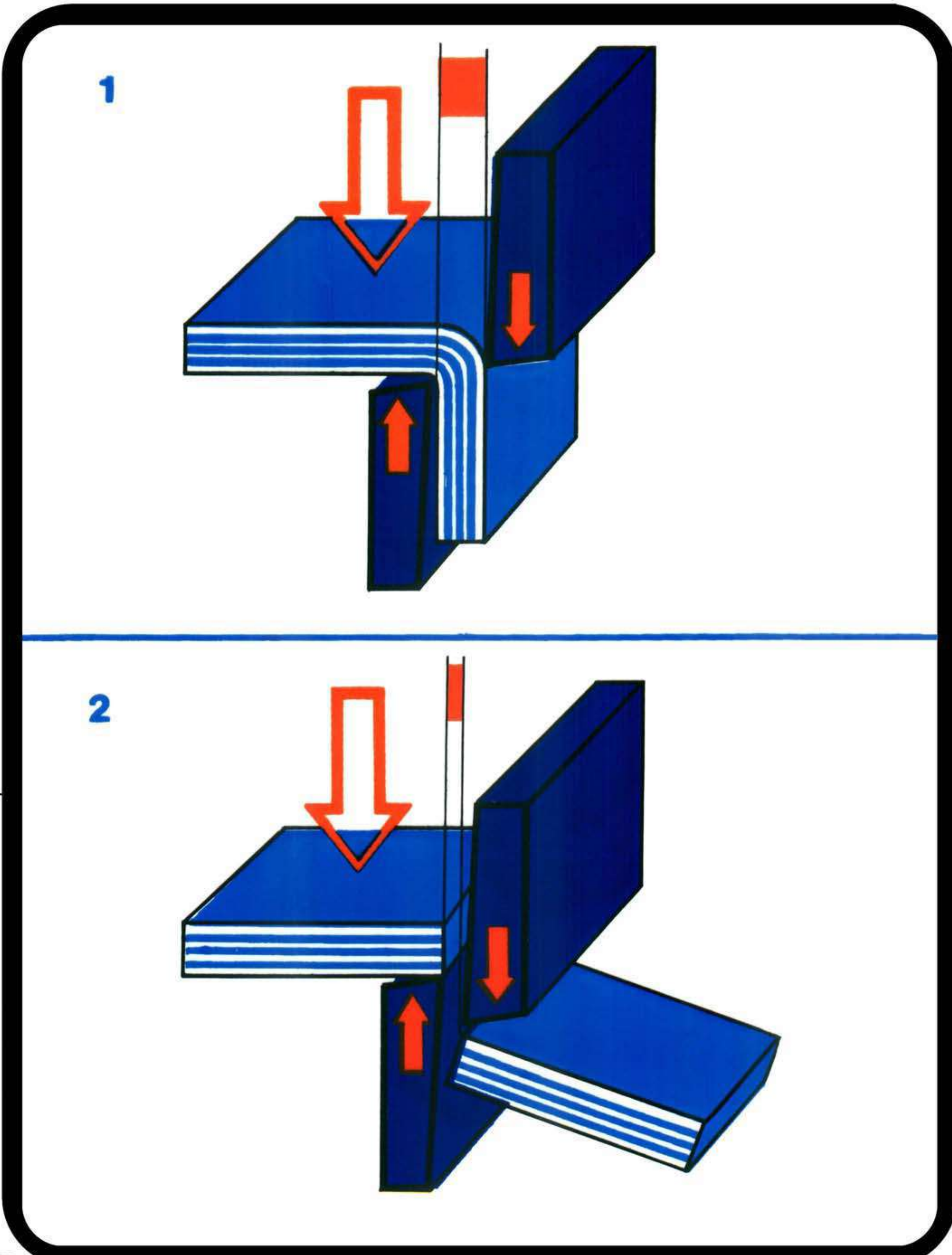

Ministerium für Schwermaschinen- und Anlagenbau
Zentralstelle für das sozialistische Bildungswesen

DEWAG
© Signograph

0

1

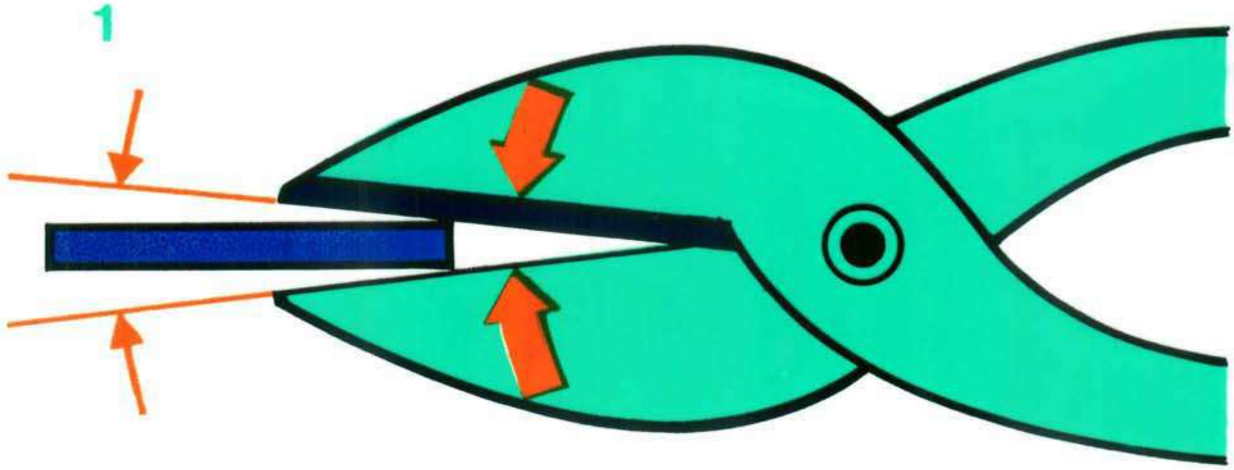

2

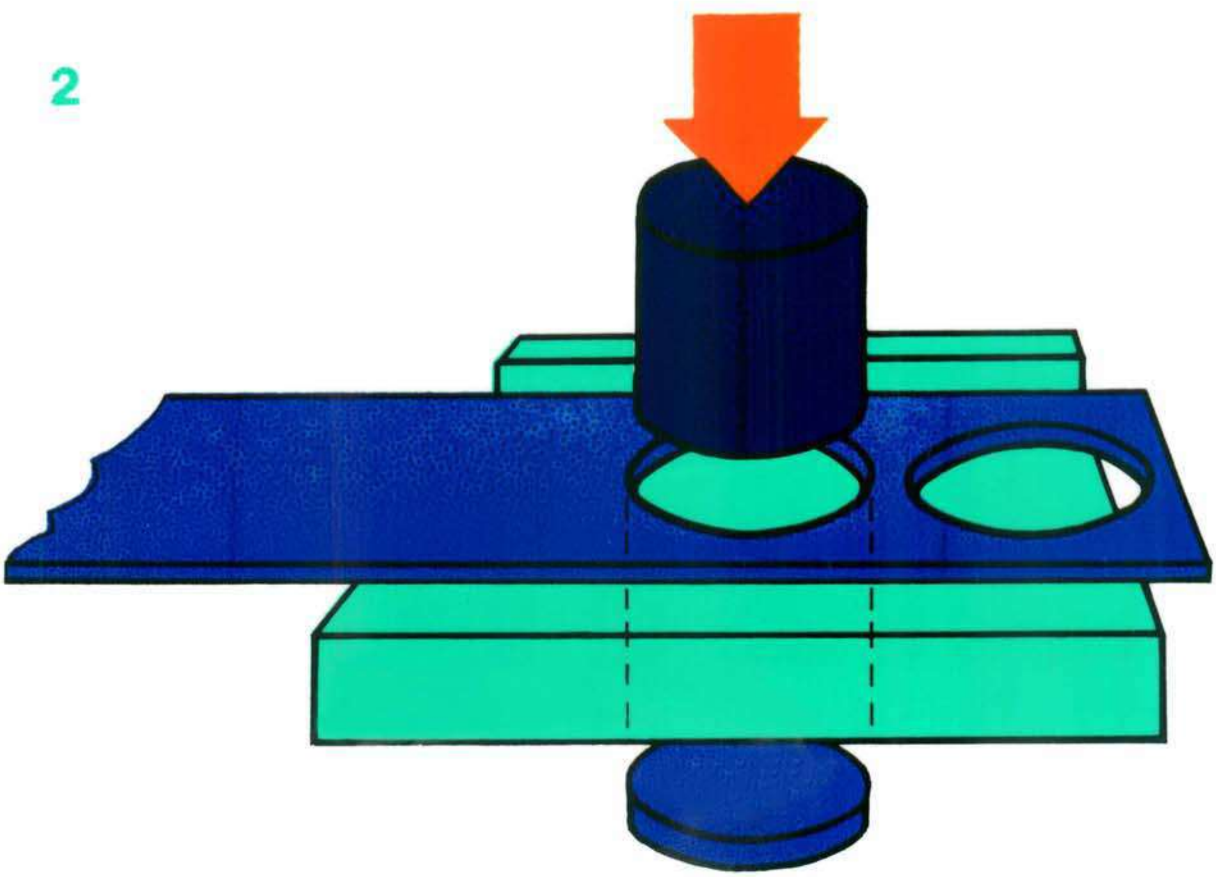

ZSB
Ministerium für Schwermaschinen- und Anlagenbau
Zentralstelle für das sozialistische Bildungswesen

DEWAG

0

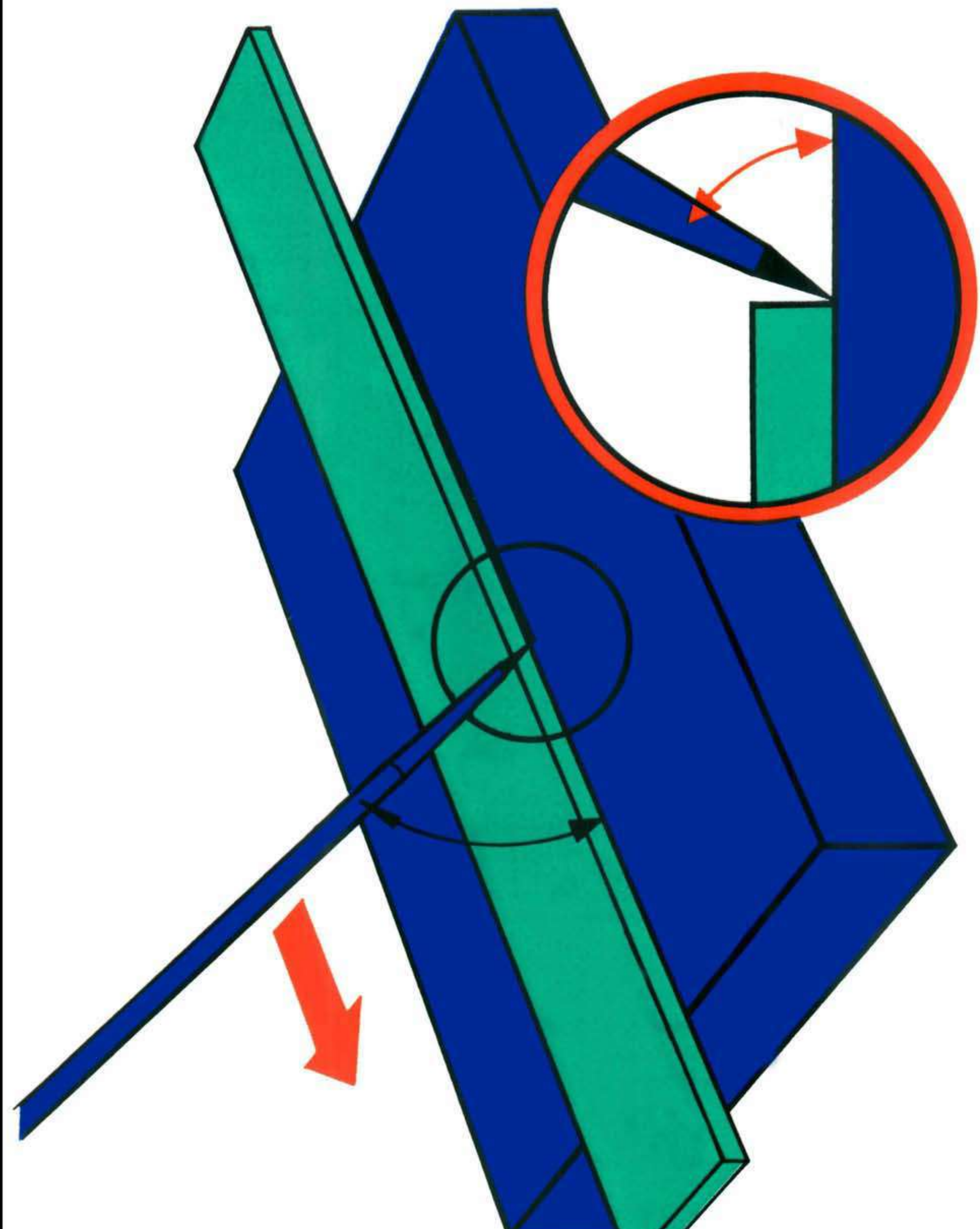

Ministerium für Schwermaschinen- und Anlagenbau
Zentralstelle für das sozialistische Bildungswesen

DEWAG
© Signograph

0

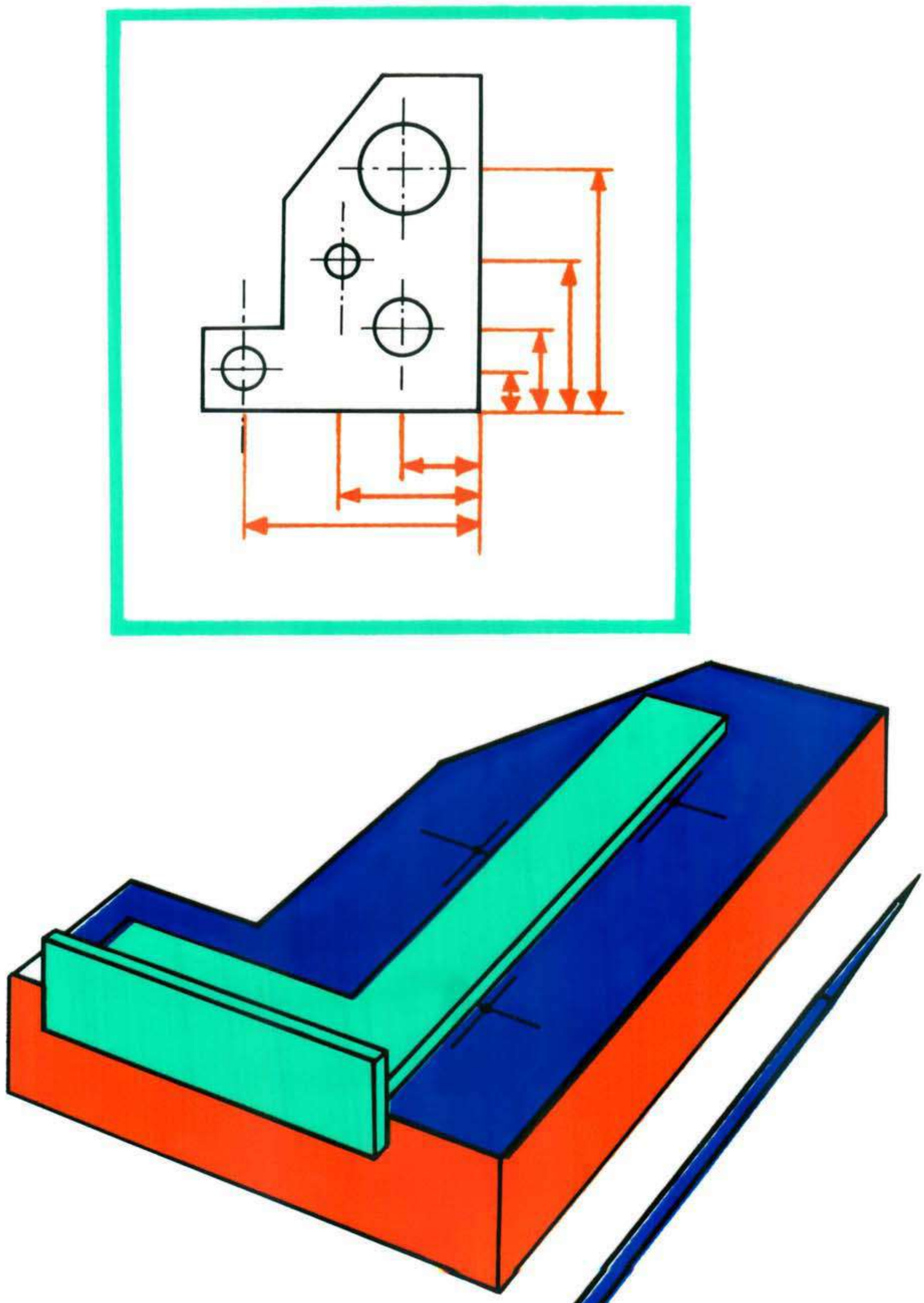

Ministerium für Schwermaschinen- und Anlagenbau
Zentralstelle für das sozialistische Bildungswesen

DEWAG
© Signograph

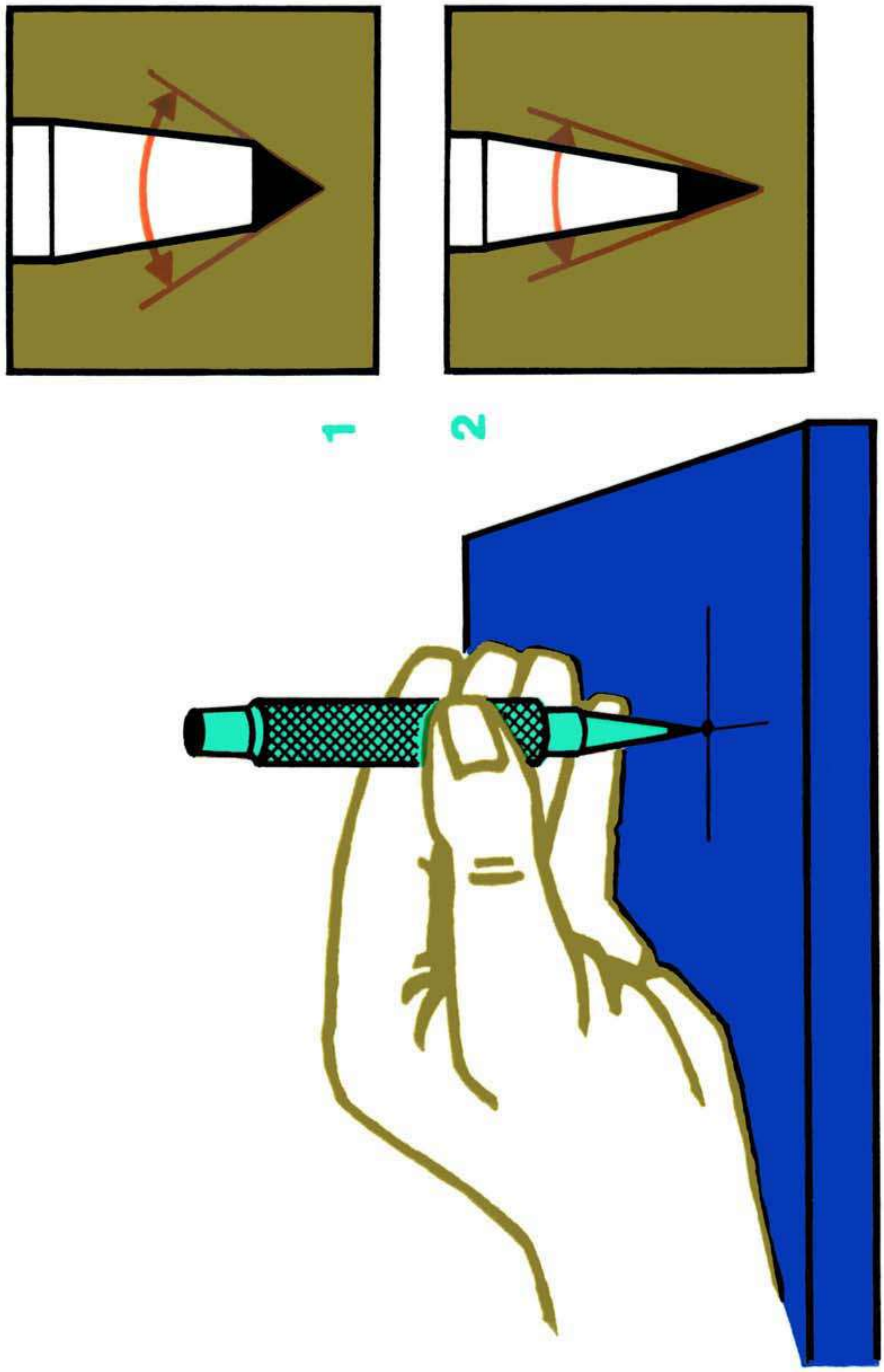

0

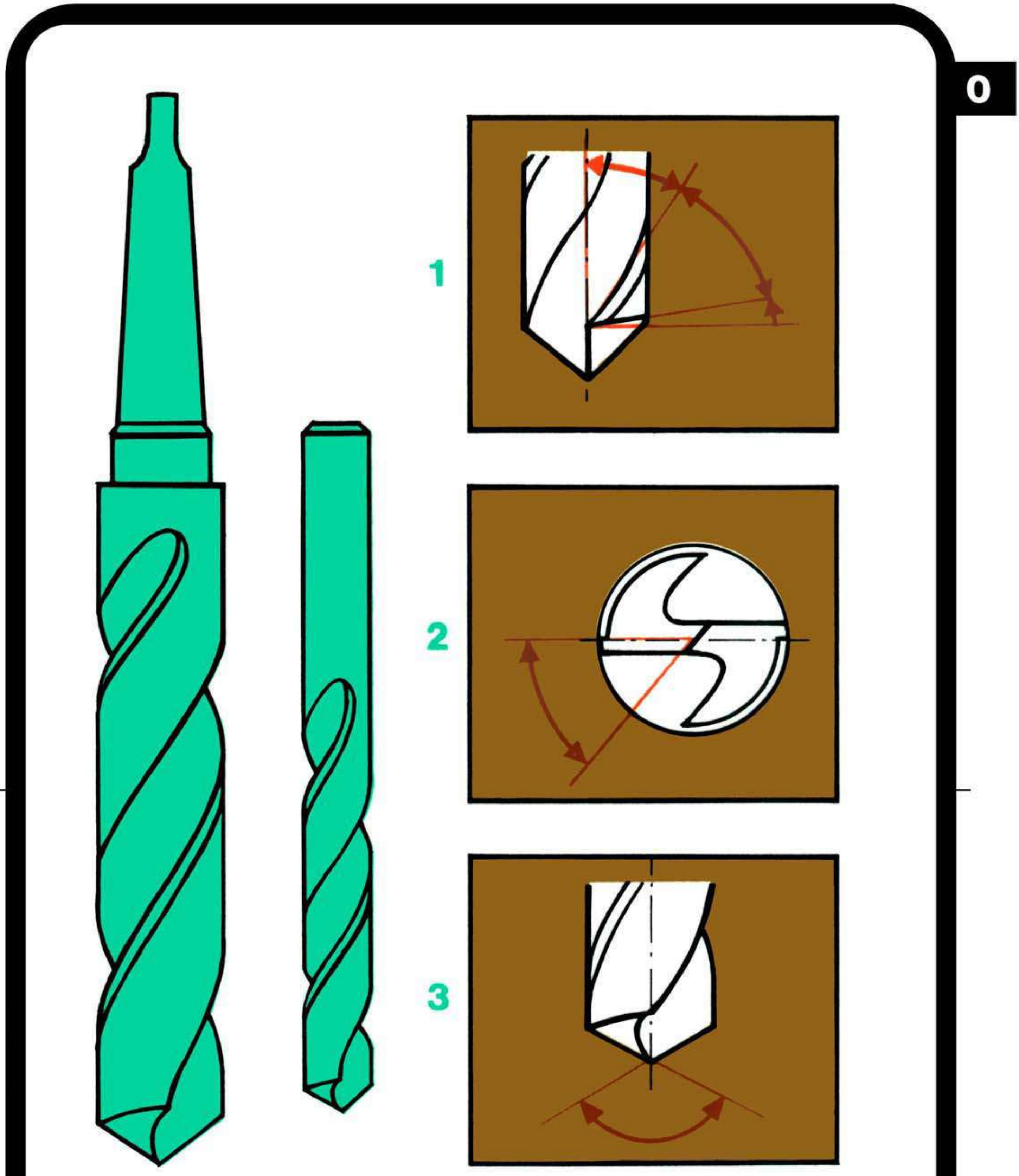

Ministerium für Schwermaschinen- und Anlagenbau
Zentralstelle für das sozialistische Bildungswesen

DEWAG
© Signograph

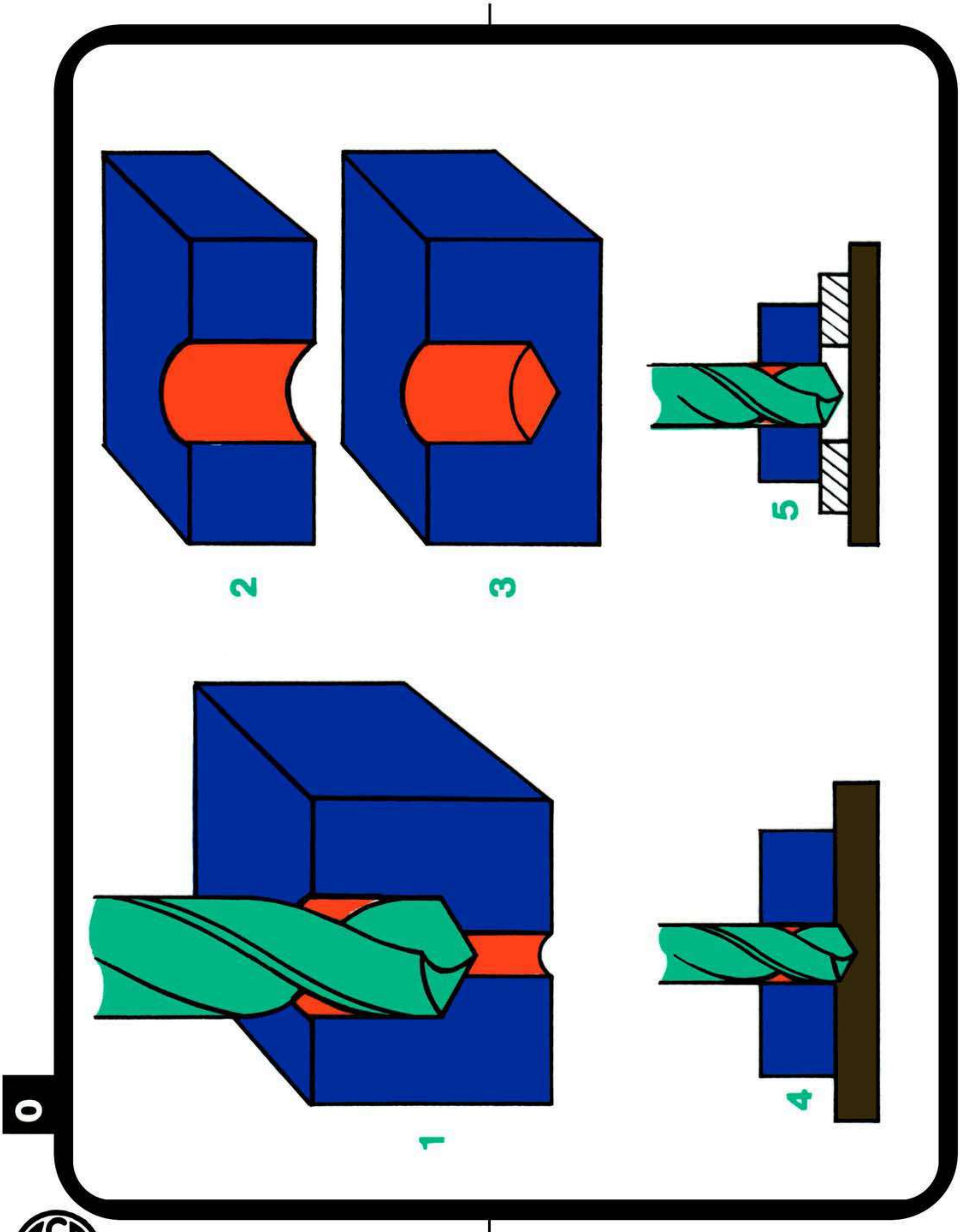

Ministerium für Schwermaschinen- und Anlagenbau
Zentralstelle für das sozialistische Bildungswesen
DEWAG
© Signograph

0

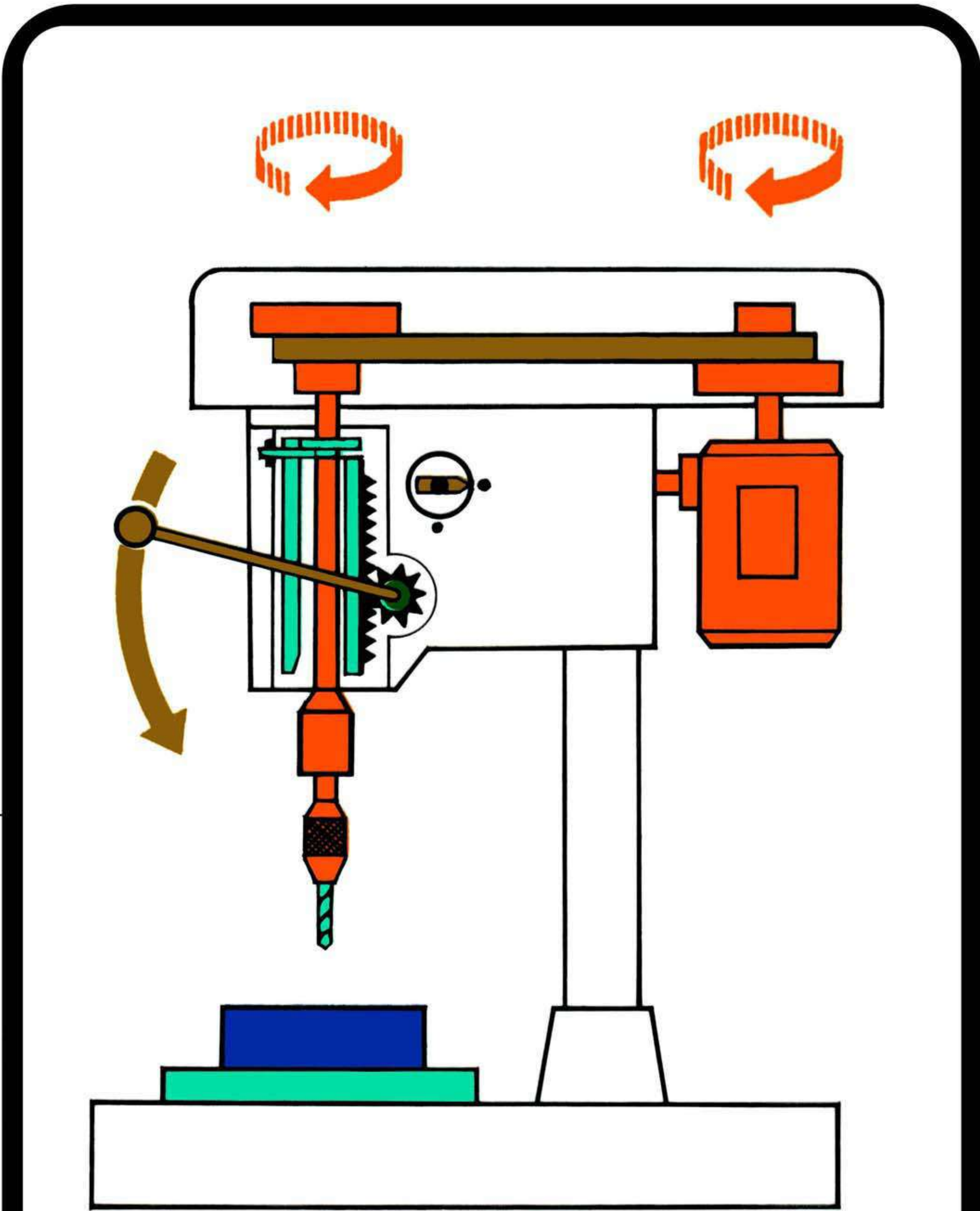

Ministerium für Schwermaschinen- und Anlagenbau
Zentralstelle für das sozialistische Bildungswesen

DEWAG
© Signograph

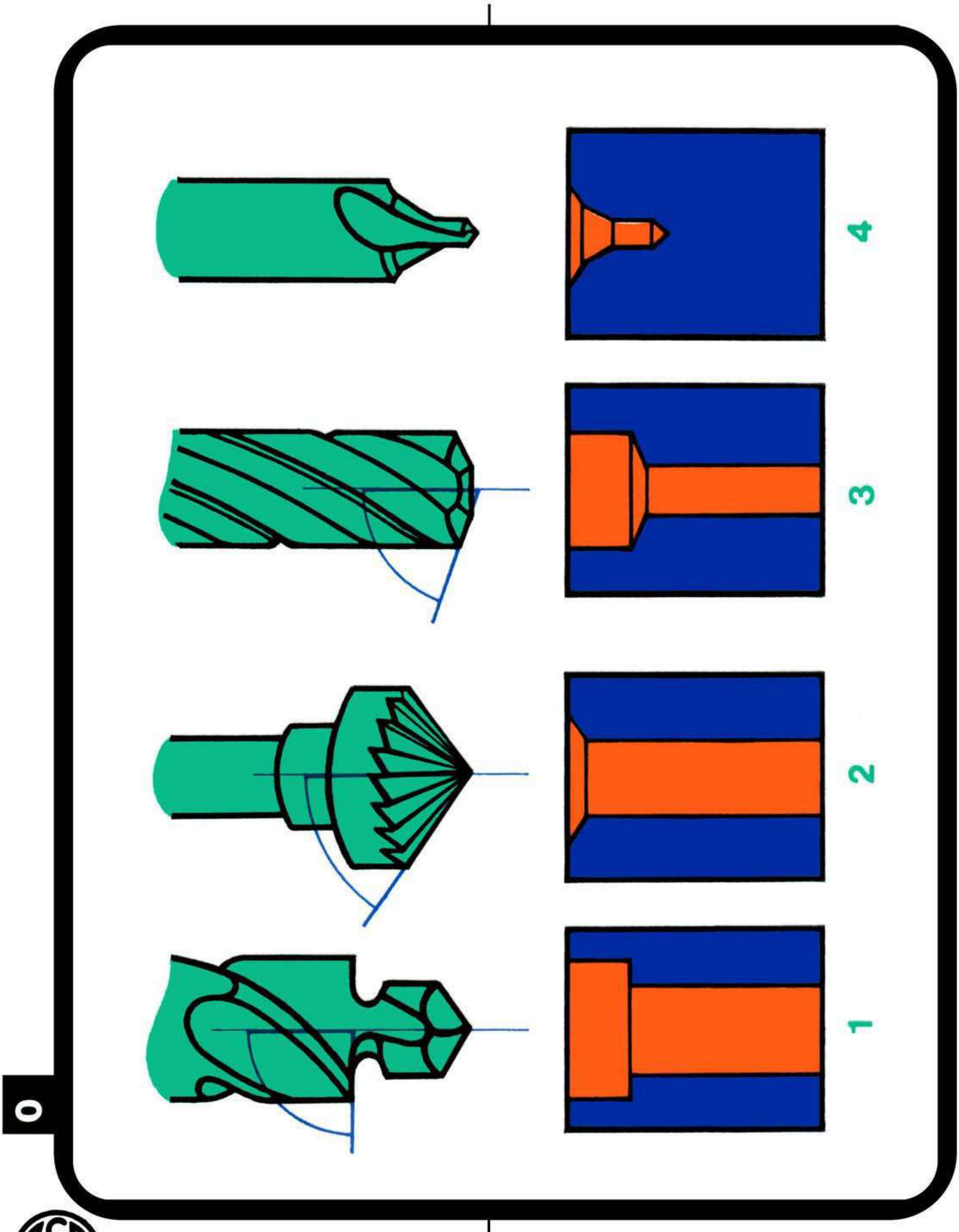

Ministerium für Schwermaschinen- und Anlagenbau
Zentralstelle für das sozialistische Bildungswesen

DEWAG

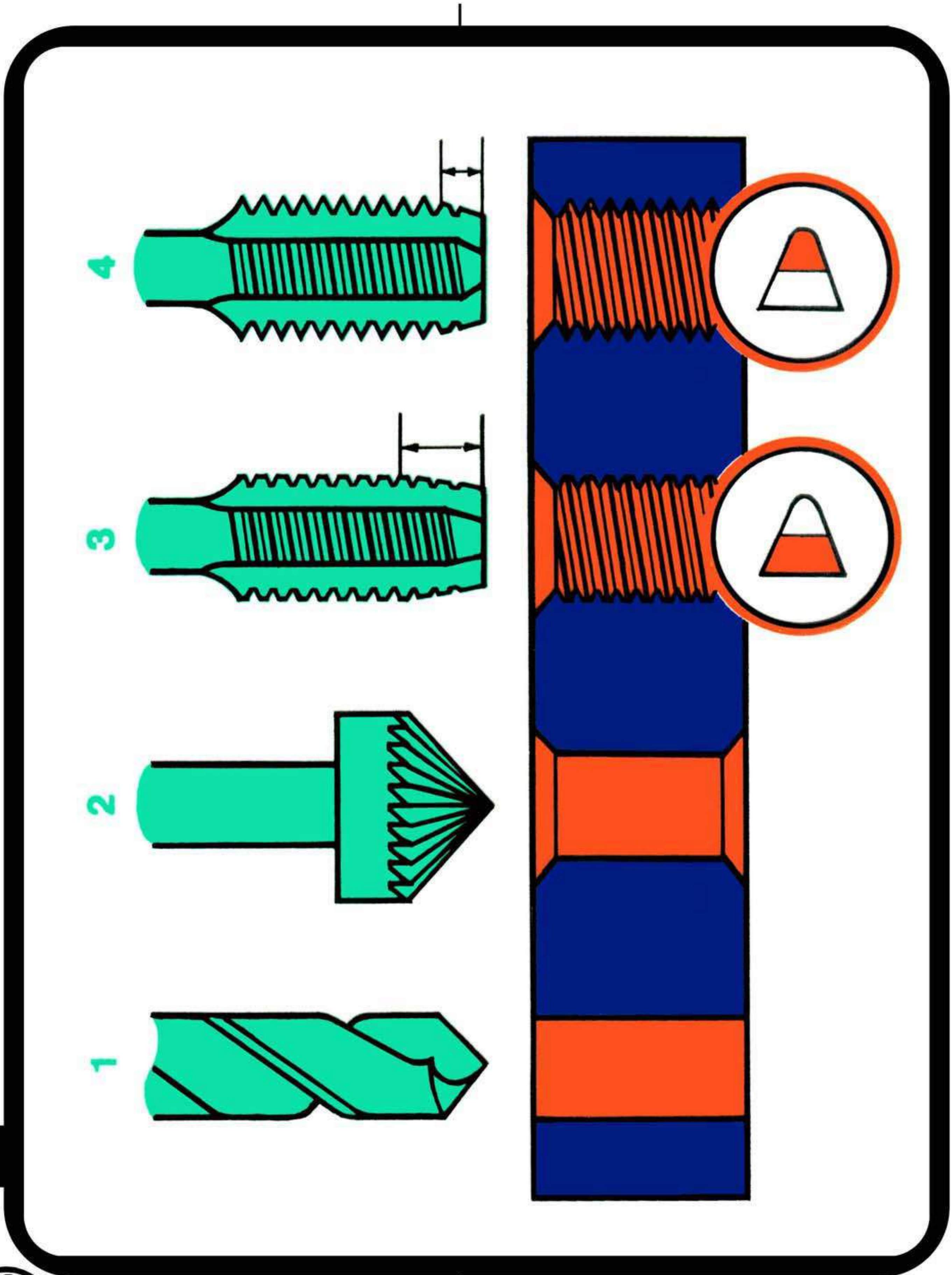

0

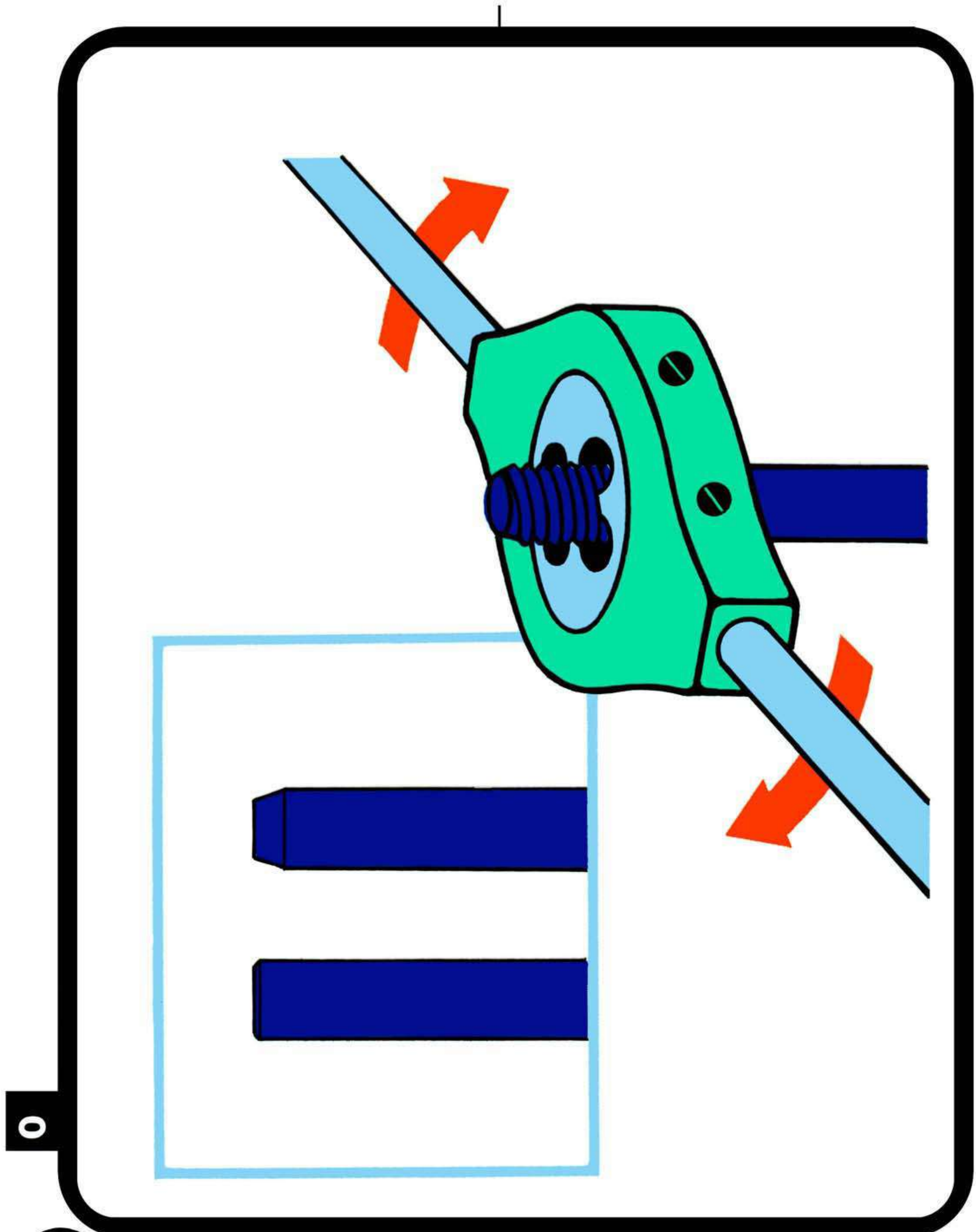

Ministerium für Schwermaschinen- und Anlagenbau
Zentralstelle für das sozialistische Bildungswesen

DEWAG
© Signograph

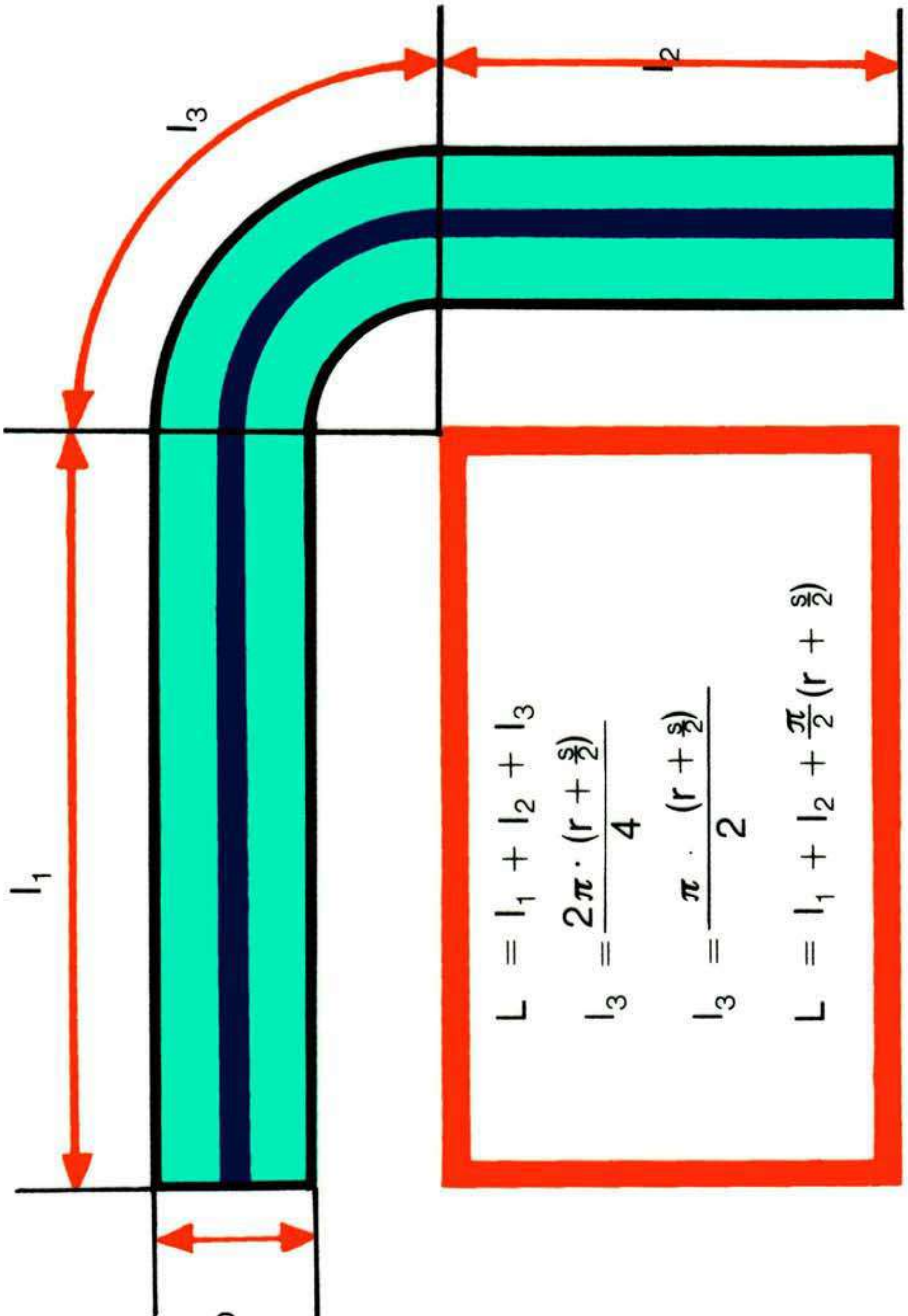

$$L = l_1 + l_2 + l_3$$

$$l_3 = \frac{2\pi \cdot (r + \frac{s}{2})}{4}$$

$$l_3 = \frac{\pi \cdot (r + \frac{s}{2})}{2}$$

$$L = l_1 + l_2 + \frac{\pi}{2}(r + \frac{s}{2})$$

0

0

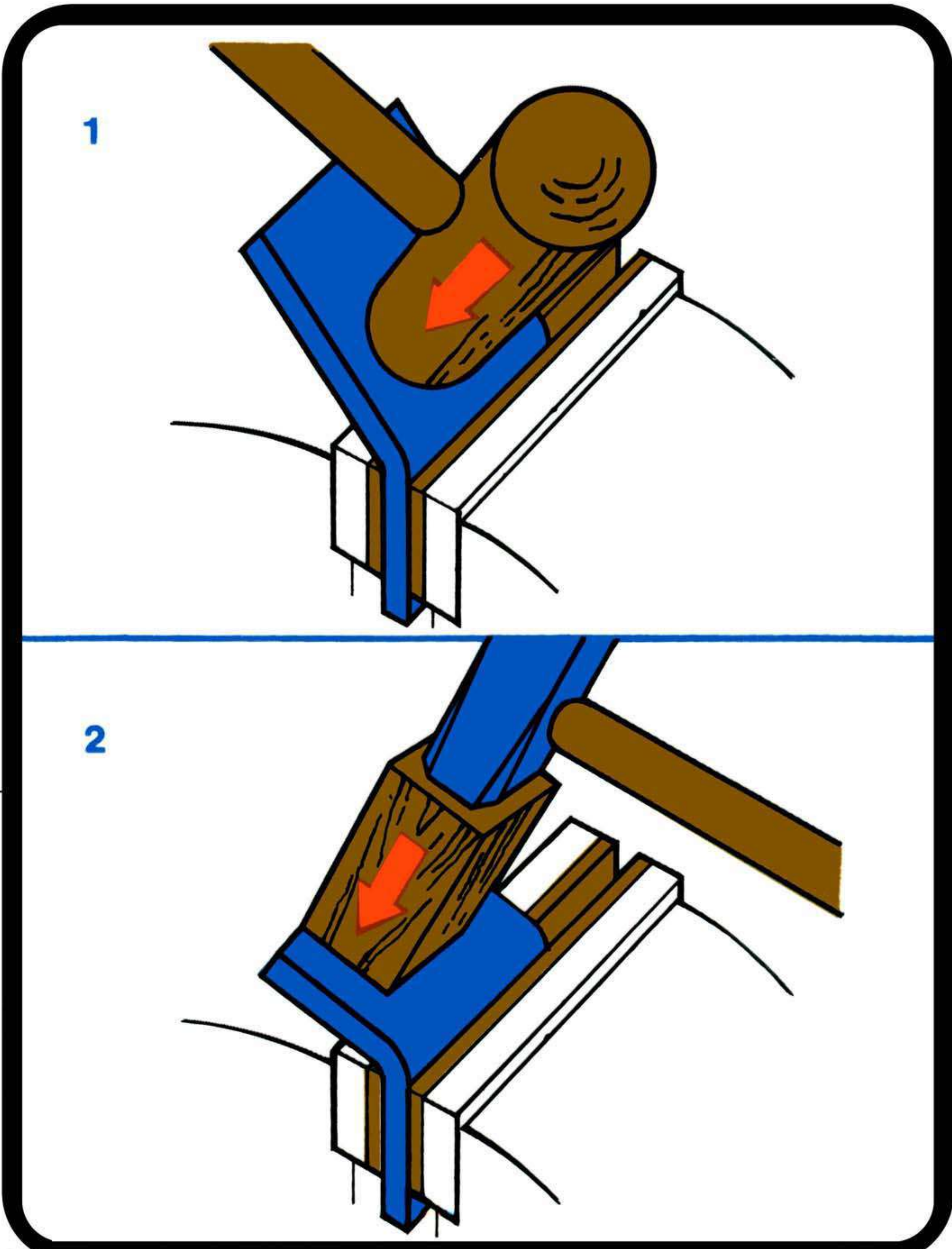

ZSB
Ministerium für Schwermaschinen- und Anlagenbau
Zentralstelle für das sozialistische Bildungswesen
DEWAG
© Signograph

0

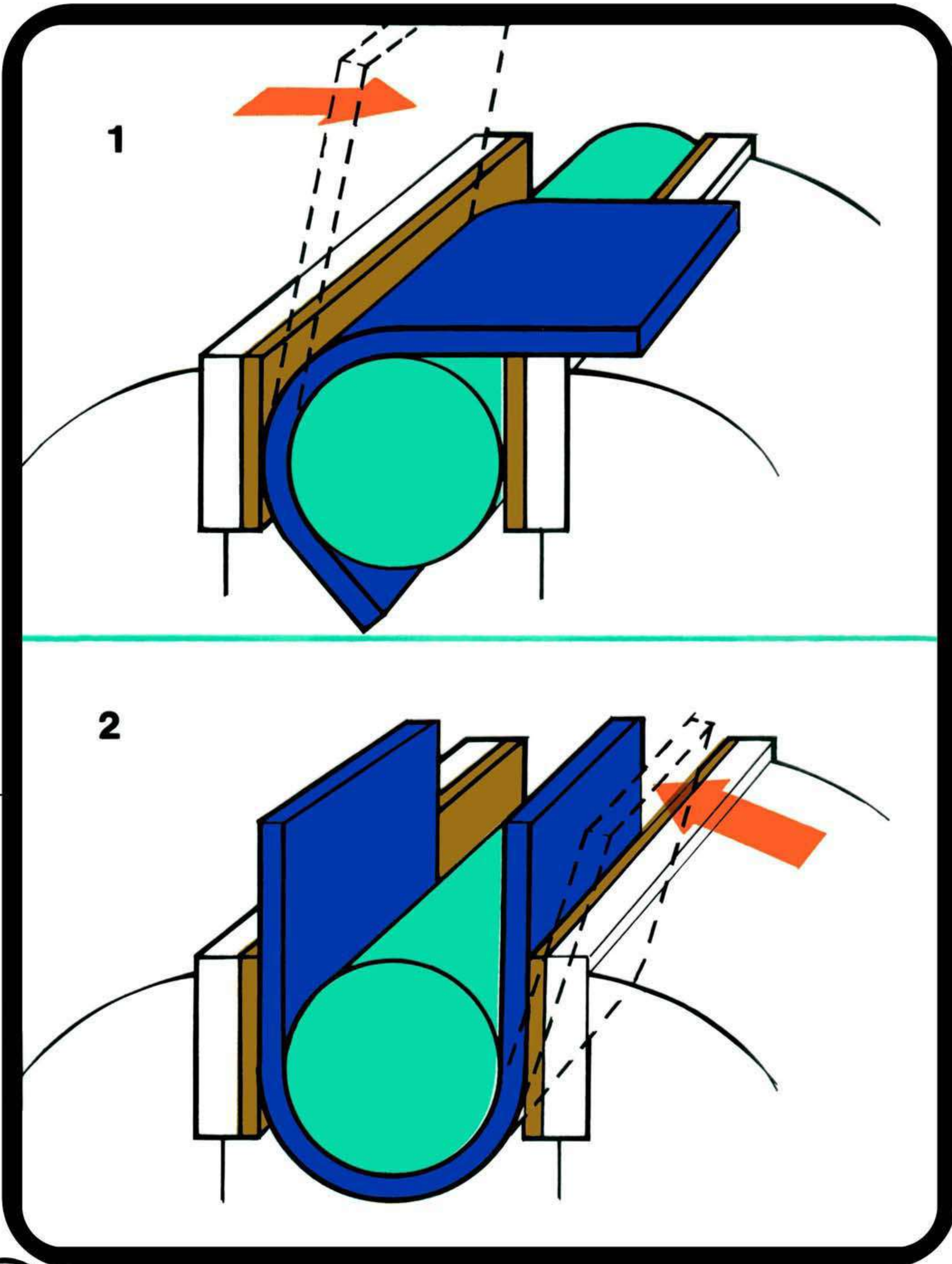

Ministerium für Schwermaschinen- und Anlagenbau
Zentralstelle für das sozialistische Bildungswesen

0

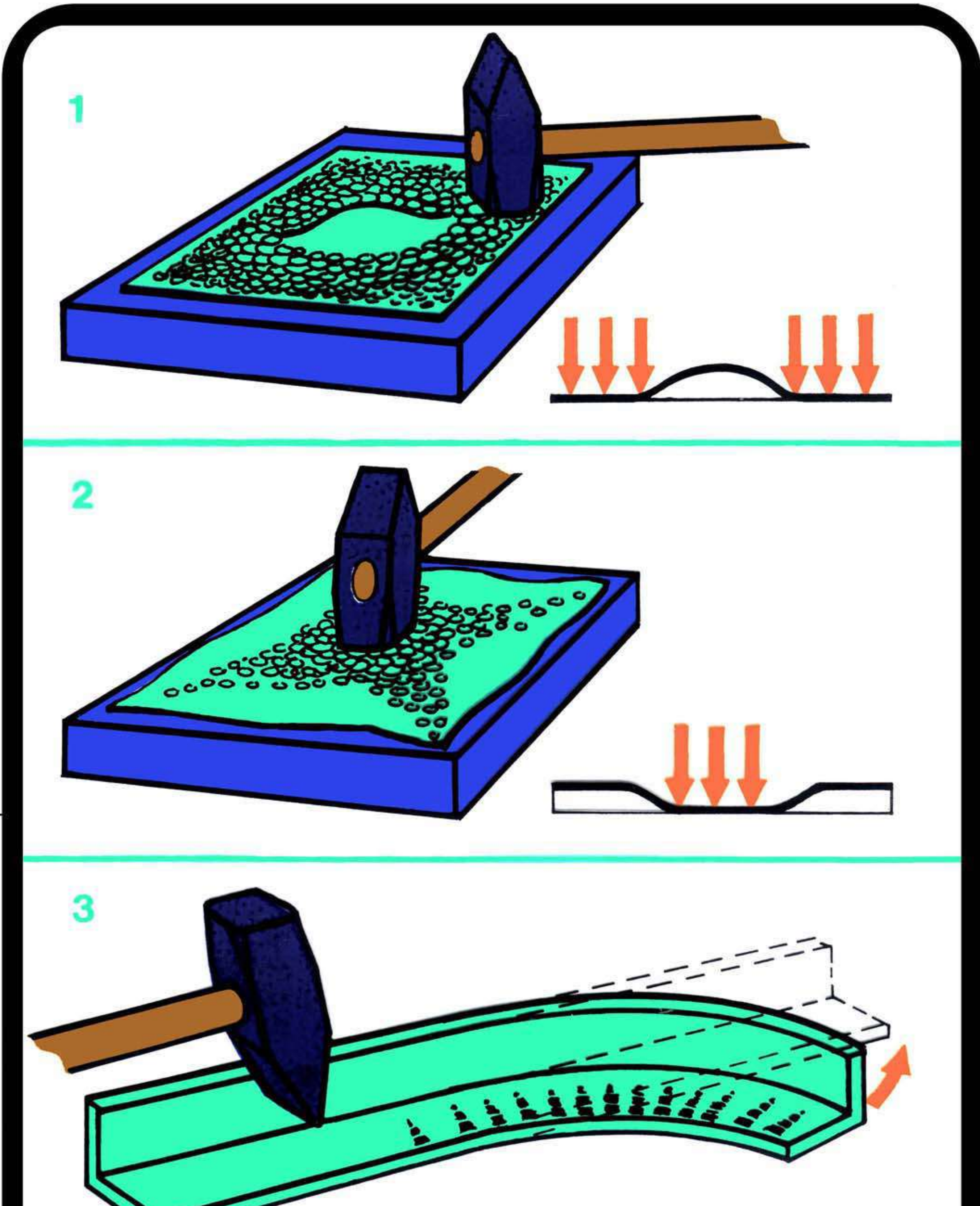

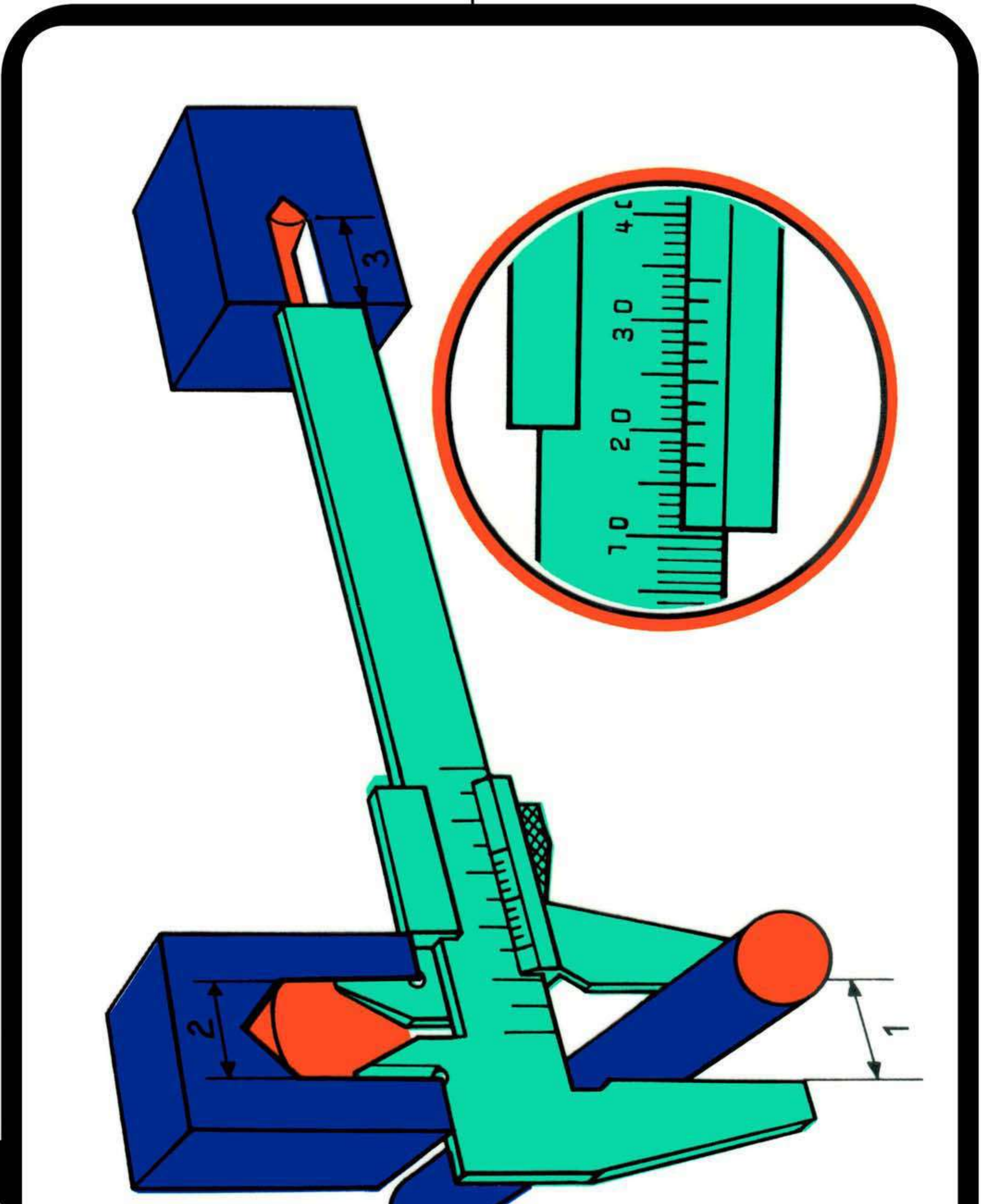

0

Ministerium für Schwermaschinen- und Anlagenbau
Zentralstelle für das sozialistische Bildungswesen

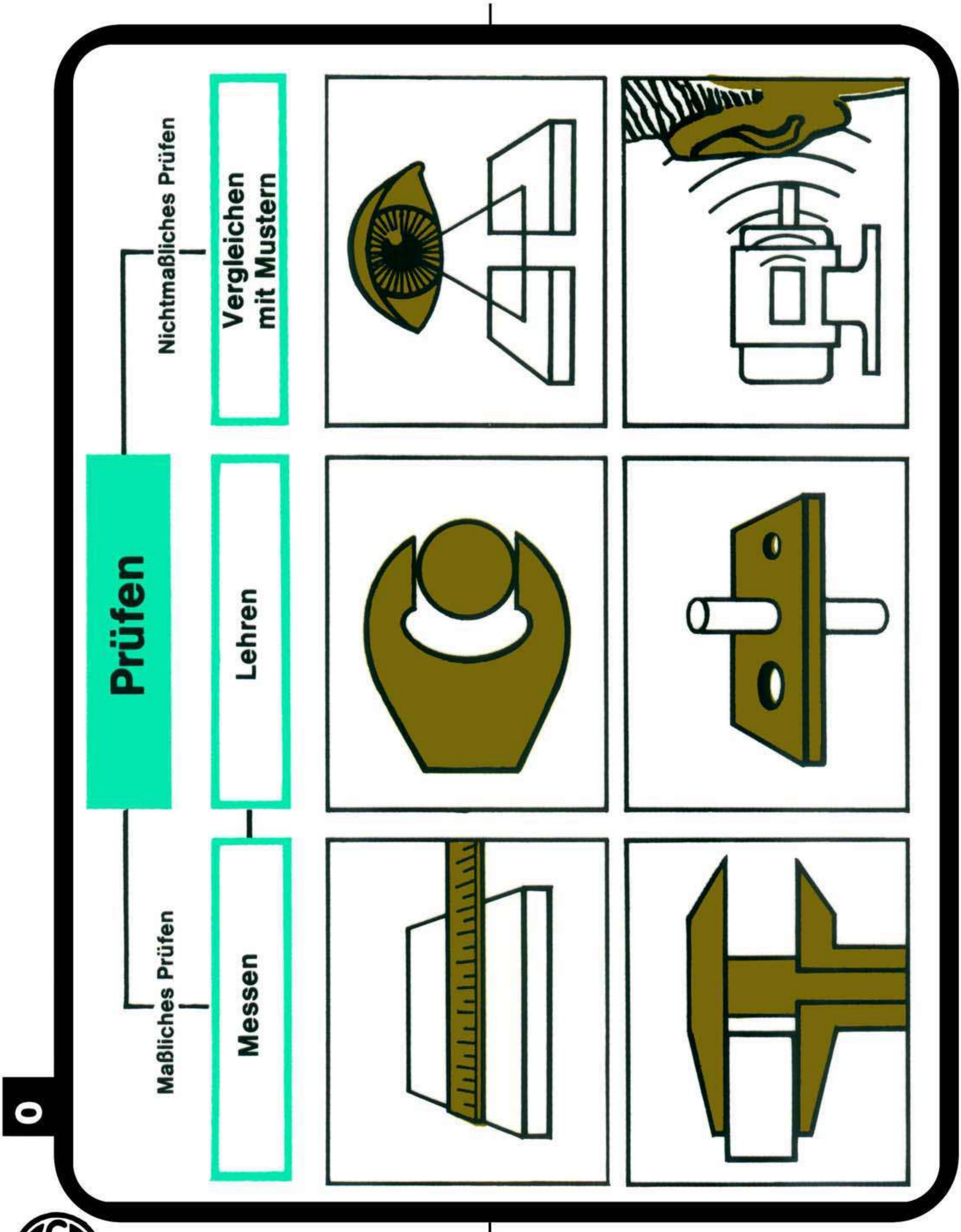

Ministerium für Schwermaschinen- und Anlagenbau
Zentralstelle für das sozialistische Bildungswesen

0

1

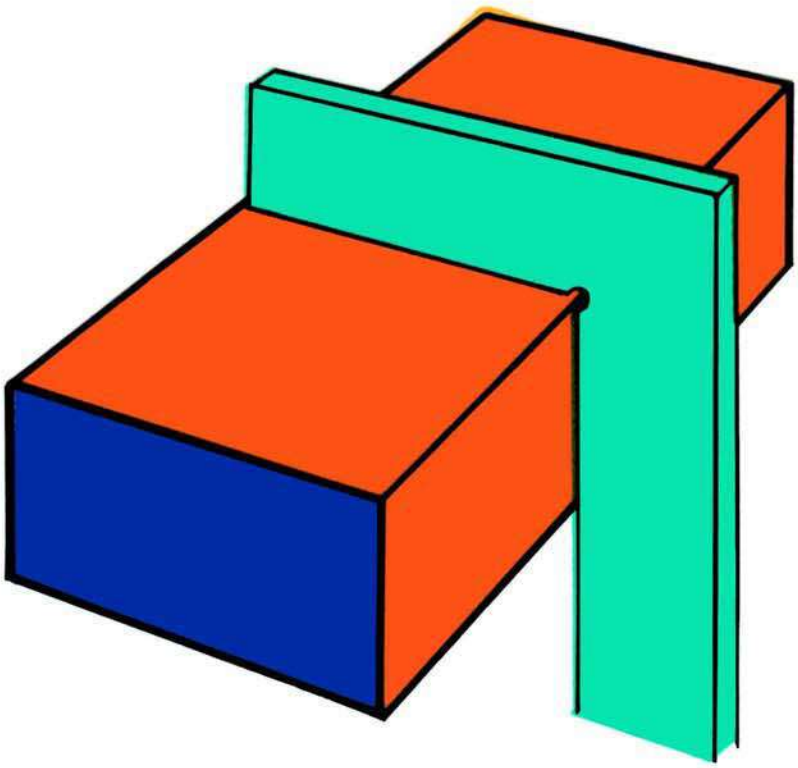

2

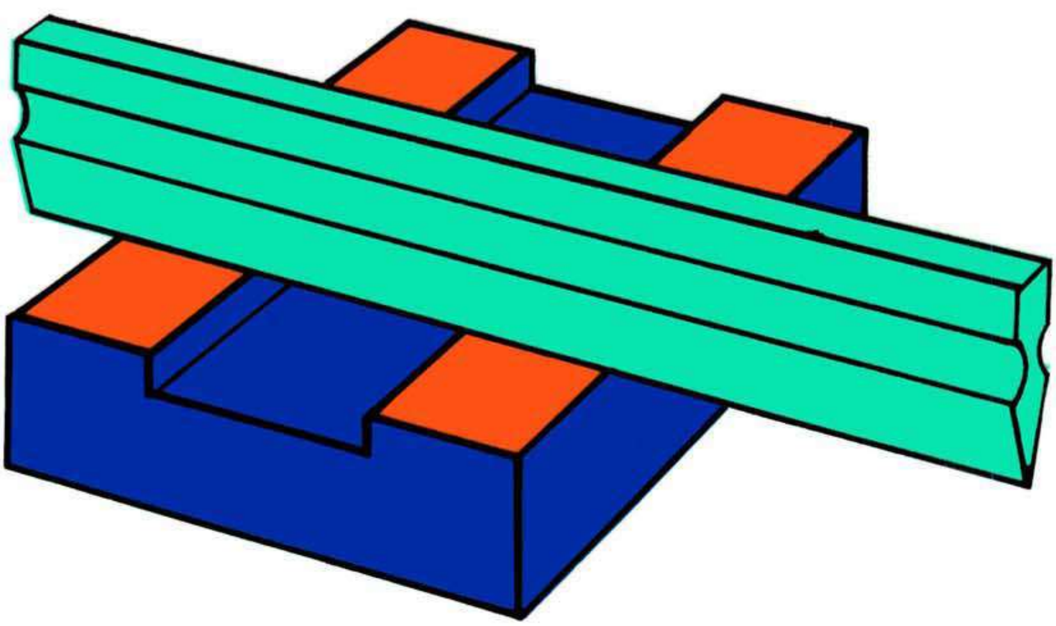

Ministerium für Schwermaschinen- und Anlagenbau
Zentralstelle für das sozialistische Bildungswesen

DEWAG

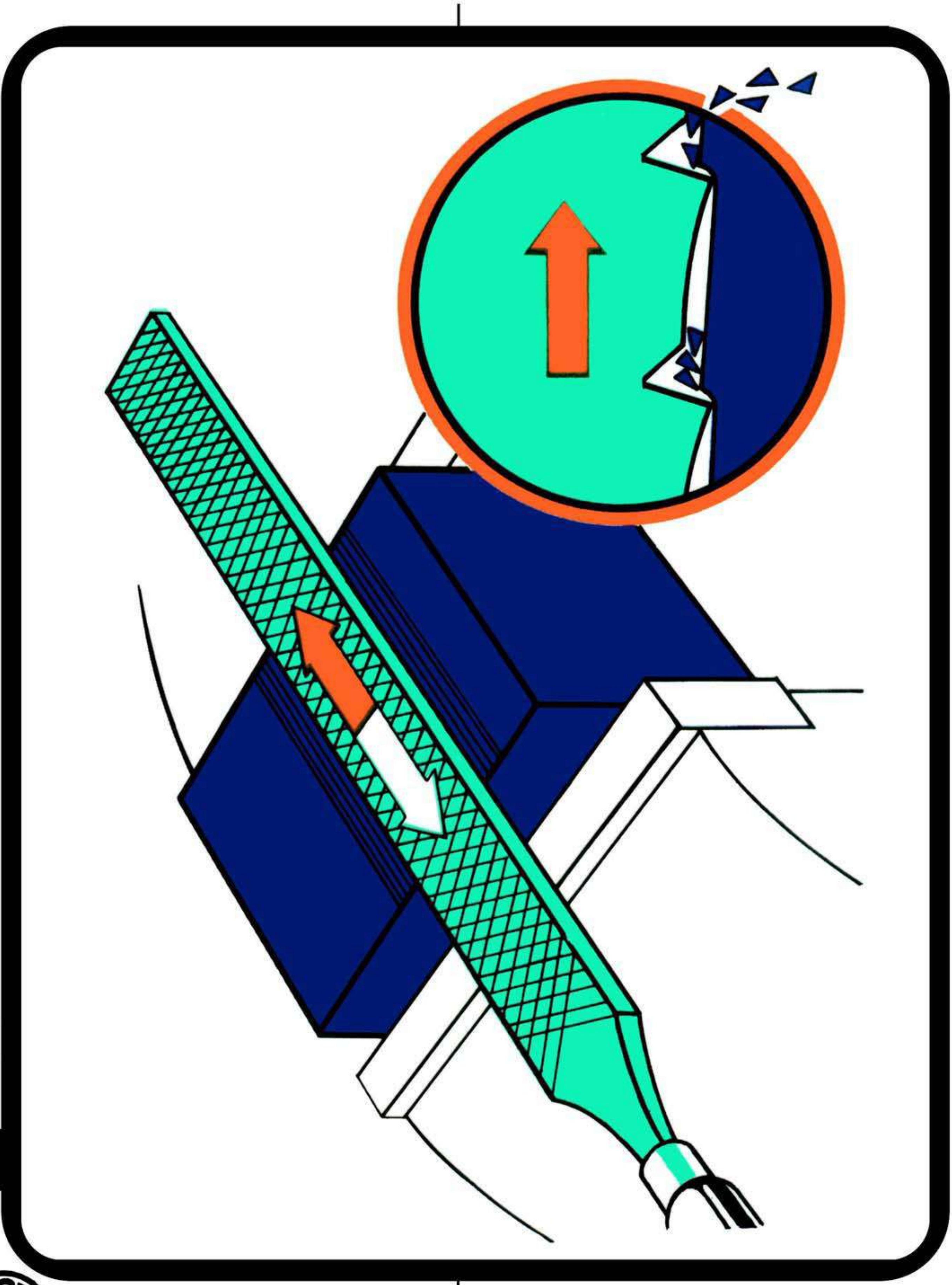

0

Ministerium für Schwermaschinen- und Anlagenbau
Zentralstelle für das sozialistische Bildungswesen

DEWAG
© Signograph

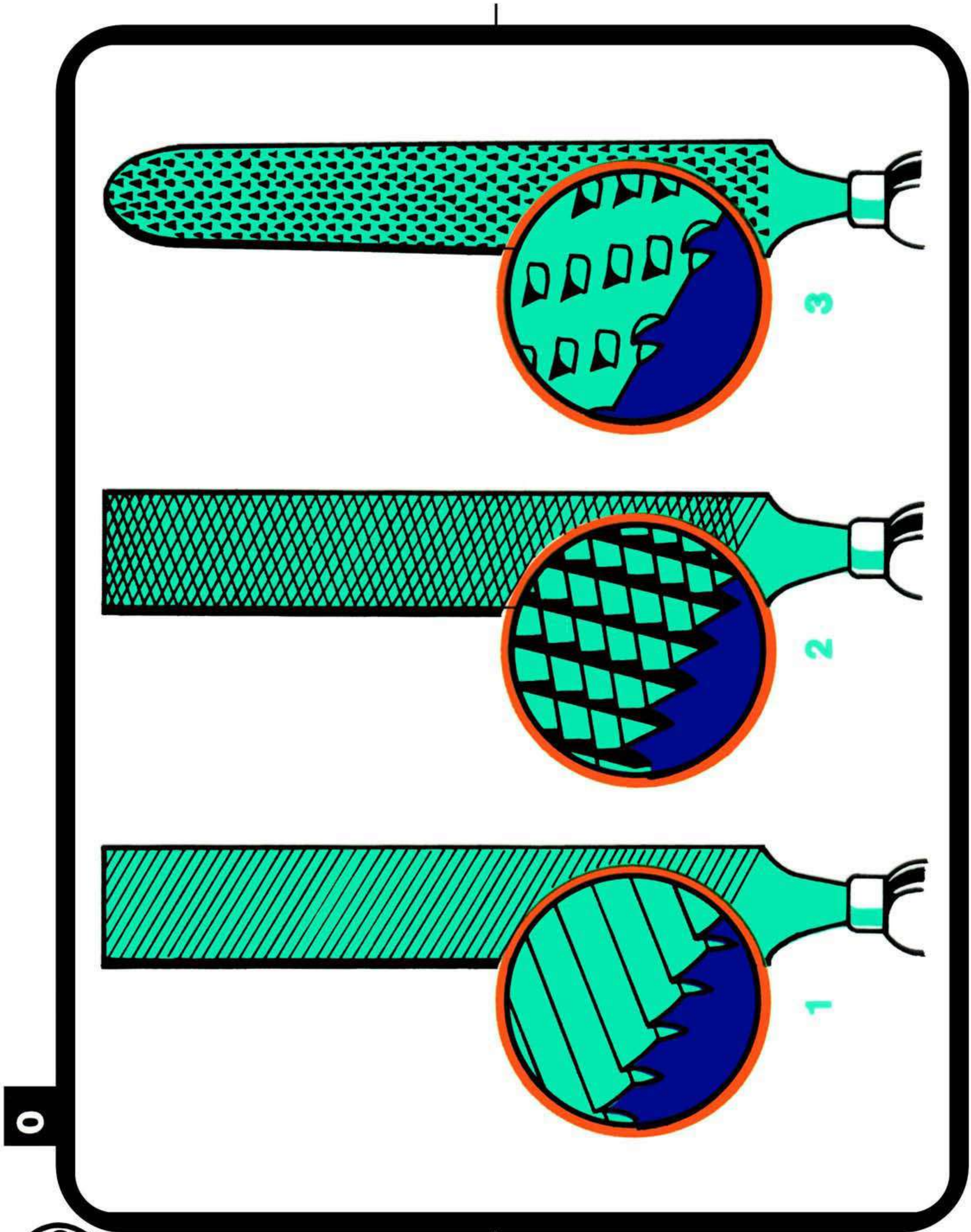

Ministerium für Schwermaschinen- und Anlagenbau
Zentralstelle für das sozialistische Bildungswesen

0

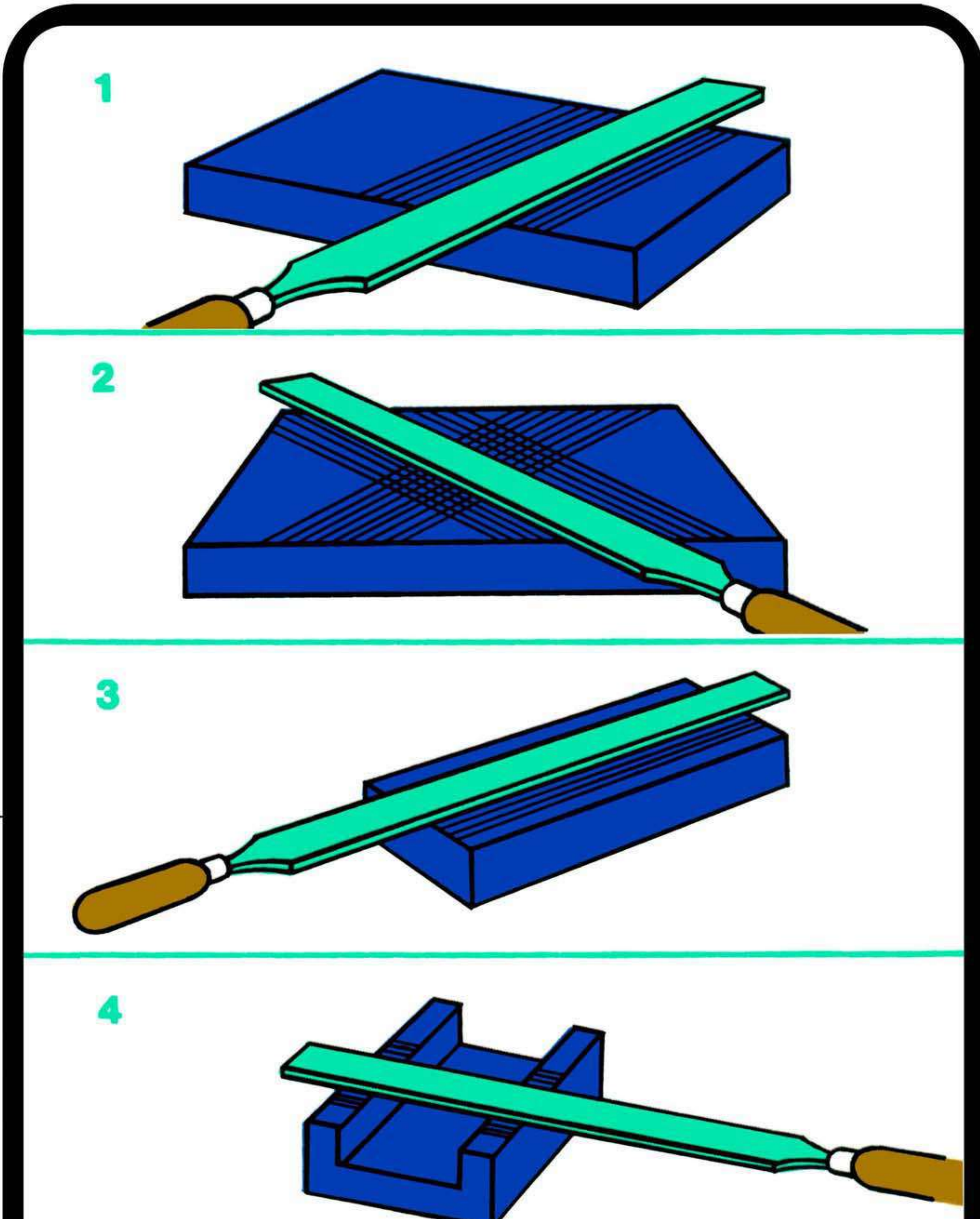

Ministerium für Schwermaschinen- und Anlagenbau
Zentralstelle für das sozialistische Bildungswesen

DEWAG
© Signograph

0

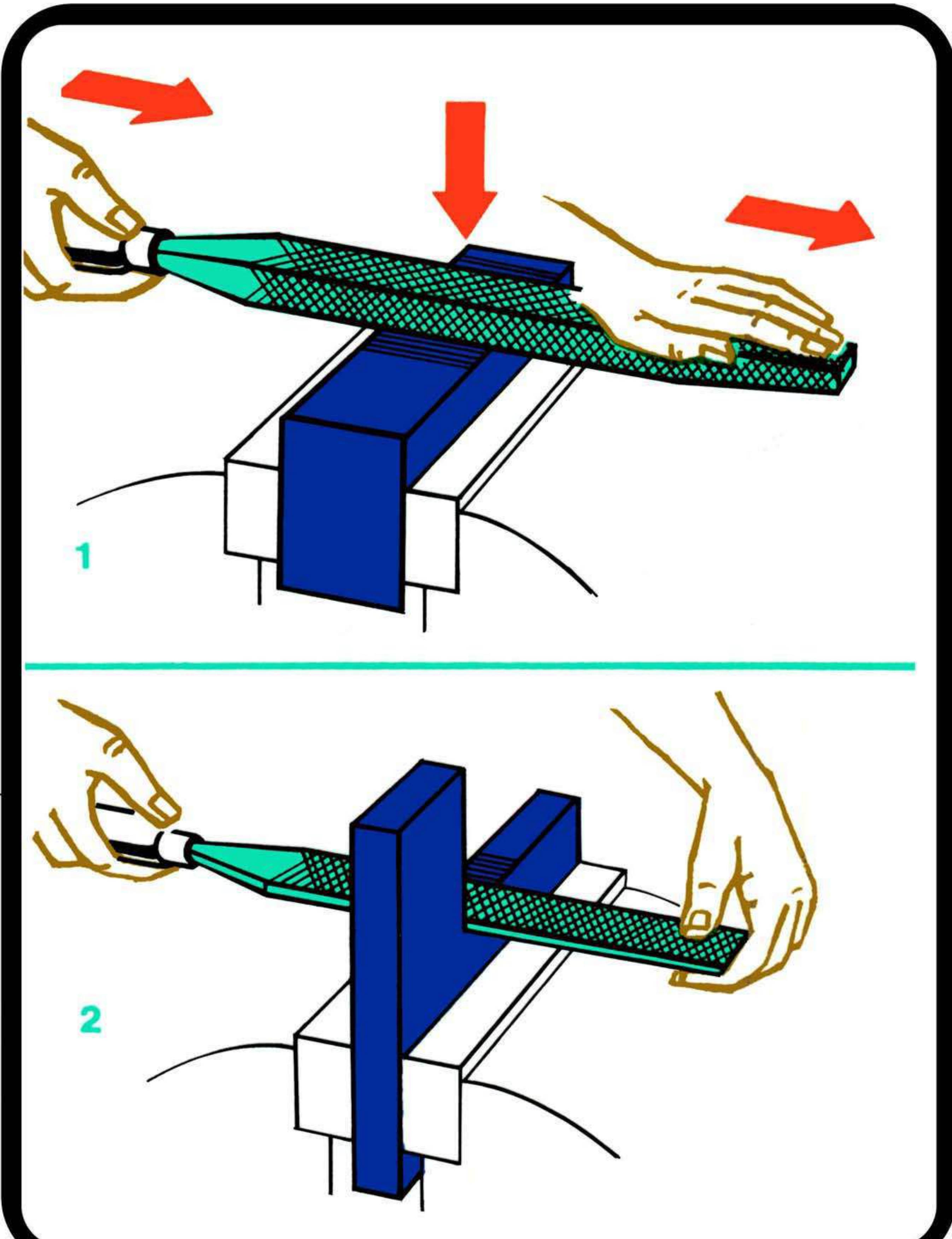

Ministerium für Schwermaschinen- und Anlagenbau
Zentralstelle für das sozialistische Bildungswesen

METAL

on Fundamentals
of General Metallography

ibe

PROFacto

Author:
Ing. Gerhard Umlauff,
Hennigsdorf Institute of Technology

The micrographs included in this series of projection films on fundamentals of general metallography were made available by Laboratory of Metallography, Materials Engineering Department, Hennigsdorf Institute of Technology.

Designed by
Günter Brabant

Prepared for publication by
Dipl.-Ing. paed. Marianne Quendt,
Dipl.-Ing. paed. Günter Zweynert

Published by
Zentralstelle für Bildungswesen des Schwermaschinen- und Anlagenbaus
[redacted]-7010 Leipzig, Barfussgässchen 12

on behalf of

Institut für berufliche Entwicklung
[redacted]-1080 Berlin, Französische Strasse 47

III-6-15 882-81 Ag 689-37-81

1. General

This series of projection films on fundamentals of general metallography can be used for the theoretical education and practical training in metal fabrication. It can also be used for further and refresher training in the metal-fabricating field. It covers the following subjects:

		Film no.
(1)	Crystalline structure of metals	1, 2, 3
(2)	Structure and real lattice	3, 4, 5, 6
(3)	Methods of examination	7 thru 13
(4)	Eutectic diagram	14
(5)	Solid solution diagram	8, 9, 15
(6)	Precipitations from solid solutions	16
(7)	Deformation of metals	17, 18, 19
(8)	Recrystallization	19, 20
(9)	Iron-carbon diagram	21 thru 26

To aid instructors in making preparations for lessons and avoid misinterpretations of the contents of projection films, all of the films have detailed explanations attached to them. Ease of comprehensibility called for the liberal use of colors in the design of projection films on methodological principles.

All crystallographic relationships (e.g., lattices and unit cells) were marked in blue, whereas transitions to higher temperatures accompanied by state changes were marked in red.

Cooling curves of thermal analysis and heating curves of thermal treatment were plotted against a blue background, whereas constitutional diagrams and those relating to strength properties were plotted against yellow and green backgrounds, respectively.

Micrographs of metals were unilaterally fixed to base films, thus providing for various forms of representation during classes. To enable instructors to plot their own diagrams, blank films nos. 27 and 28 were provided with centimeter grids. A4 size films are used together with frames to take up base films.

The films in this series are contained in suitable bags which together with the booklet and frame are accommodated in a plastic folder, thus providing for ease of storage together with other types of information carriers.

2. List of projection films

Film no.	Film title
1	Crystal lattice
2	Grain and grain boundary
3	Unit cells
4	Crystal growth
5	Real lattice structure
6	Dislocation
7	Etching possibilities
8	Macro- and micro-etching
9	Coarse and fine grains
10	Segregations in rimmed steel
11	Metallurgical microscope
12	Thermal analysis
13	Curve of solidification
14	Eutectic
15	Solid solutions
16	Precipitations from solid solutions
17	Stress-strain diagram
18	Process of deformation
19	Work hardening of copper
20	Recrystallization of copper
21	Iron-carbon diagram no. 1
22	Iron-carbon diagram no. 2
23	Steel corner of the iron-carbon diagram
24	Ferrite-Austenite
25	Primary and secondary cementite
26	Pearlite-Ledeburite
27	Blank film with centimeter grid
28	Blank film with centimeter grid

3. Explanations of films

Film no. 1

Crystal lattice

It is essential to point out that the crystalline structure of metals can be explained only with the use of a model theory. To convey such model concepts, film no. 1 should be presented together with films nos. 2 and 3 which are concerned with grains and grain boundaries and with unit cells, respectively. By representing rows, lattice planes, space lattices, and unit cells and indicating the order of magnitude of the lattice constant, it is possible to explain the abstraction from the solid sphere model to the point lattice. Geometric laws can thus be understood more easily.

If required, portions of the film presented can be covered during instruction (e.g., representation of the lattice plane and unit cell). This allows the students' attention to be concentrated on what is being discussed.

Film no. 2

Grain and grain boundary

This film compares a model concept that is used to explain the polycrystalline structure of metals with real structural conditions. When viewing this film it is necessary to take into account the different scales. This film can be used to explain the term anisotropy which indicates variation in properties in different directions, e.g., in a steel sheet. When discussing the contents of the film, halves thereof can be covered and compared with micrographs, and more particularly film no. 7 (etching possibilities), film no. 8 (macro- and micro-etching), and film no. 9 (coarse and fine grains).

Film no. 3

Unit cells

This film shows a body-centered cubic unit cell and a face-centered cubic unit cell as the most important representatives of the crystal systems. It should be noted that multifarious cubic unit cells occur in nature and that not only the form and size but also the configuration or arrangement of the atoms are of importance (properties of metals).
It is appropriate for a table of lattice constants and other values to be set up during discussion of the subject matter.
The imaginative faculty of students can be substantially supported through using a combination of sphere model and film representation.

Film no. 4

Crystal growth

This film shows, in a series of single images, the process of crystallization during transition from the liquid to the solid phase (anisotropy of crystal growth). It should be pointed out that crystals will not assume a stable position in the melt but will move within the melt up to a certain degree of solidification. Since impurities often tend to accumulate in the residual melt during solidification, segregations in the structure will occur. It is in this particular context that film no. 10 (segregations in rimmed steel) can be referred to. The objective should be to reduce model concepts to reality. Such terms as real structure and structural faults can be introduced to explain the actual behavior of materials. This confirms the possibility of affecting the properties of materials.
Also, film no. 4 can be used to discuss the dependence of the grain boundary upon the number of nuclei present. The individual images of this film can be presented one after the other, with those that are not be shown being covered.

Film no. 5

Real lattice structure

This film, which is a continuation of film no. 4 (crystal growth), is concerned with the structural faults of crystal lattices. The extent to which these forms of real lattice are discussed in classes is left to the discretion of the instructor. However, it is essential that he should discuss at least vacant lattice sites, exchange atoms, and interstitial impurities. It should be pointed out that the exchangeability of atoms (the atomic volume must be no greater than fifteen percent of the atoms of the basic lattice) and incorporability of atoms at vacant sites (comparison with the sphere model in film no. 1) are limited. It was only in recent years that concepts of the real lattice structure could be developed as a result of researches conducted by solid state physicists. They form the basis for the theory of dislocations and, hence, for the workability of metals.

Individual types of fault should be presented and discussed separately by covering the film. Film no. 5 provides the basis for discussing the contents of film no. 18 (process of deformation).

Film no. 6

Dislocation

To be able to explain the process of translation (deformation by shear - film no. 18) it is necessary to introduce the term dislocation. Only edge dislocations will be discussed here notwithstanding the fact that, in reality, there are numerous forms of dislocations such as screw dislocations, mixed-type dislocations, and so on. This representation of dislocation requires that we confine ourselves, for epistomological reasons, to few atoms and lattice planes although, in actuality, thousands of atoms are involved in it. A dislocation is a higher energy (lower equilibrium) site surrounded by stress concentrations.

Be sure to point out the possibility of such stresses joining so as to increase the overall stress level (cf. film no. 19 that is concerned with the work hardening of copper).

Film no. 7

Etching possibilities

Microscopic and metallographic examinations of metals and alloys are not usually performed in all areas of vocational education and training. However, it is necessary to discuss problems associated with structural examinations. This film can be used to compare theoretical knowledge with practical results of structural examinations. Students should realize that results of structural examinations obtained with the use of micrographs form the basis for obtaining new knowledge (e.g., in constitutional diagrams). Shown in this film are, at a scale of 100 : 1, two micrographs of pure copper etched using hydrochloric acid and iron chloride, respectively.

It can be seen that etching results in the grain boundaries and, later, the grain surfaces being attacked, with the structural pattern thus being essentially dependent upon the time of etching.

Contrast etching is also possible by using other and more aggressive etchants. The action of etching agents can be discussed by reference to film no. 2 (grain and grain boundary).

Film no. 8

Macro- and micro-etching

This film can be used to demonstrate different methods of examination. In metallography, a distinction is made between macroexamination and microexamination depending upon whether a particular structure can be observed or identified with the naked eye or by means of a microscope. Shown in film no. 8 are the images of an etched pure aluminum ingot (at a scale of 1 : 1) and of a structural steel microsection (at a scale of 100 : 1).

In the case of the pure aluminum ingot, there can be seen grain growth taking place as a result of cooling of the small cast ingot from the outside in. Indentation results from the decrease of volume. Whereas the structural pattern of pure aluminum allows only the kind of crystal formation to be seen, that of structural steel provides qualitative information about individual structural components. Because of the larger number of nuclei of crystallization, the structural constitution of mild steel is nearly uniform in all regions.
Film no. 8 can be discussed in connection with films nos. 2 and 4 that are respectively concerned with grains and grain boundaries and with crystal or grain growth.

Film no. 9

Coarse and fine grains

This film, which can be discussed in connection with film no. 4 (crystal growth) and film no. 13 (curve of solidification), enables instructors to explain the development of different grain sizes. It includes two micrographs of different grain size low-carbon steel etched using 3 % alcoholic nitric acid, the scale being 100 : 1.
It is essential to discuss the effect of grain size upon material properties (structure, behavior) with particular reference to the causes of formation of coarse grains.

Film no. 10

Segregations in rimmed steel

The macrostructure of steel is greatly influenced by processes of segregation taking place during solidification thereof. Such elements as phosphorus and sulfur show a marked tendency toward segregating. Segregations present in the original steel ingot are correspondingly modified during metal working operations.
This film shows the images of two macroetches and of one Baumann sulfur print of rimmed steel. The segregations shown here are generally referred to as macro- and microsegregations, respectively. Be sure to give instructions for use and fabrication (welding, drilling, corrosion, etc.) of rimmed steels.

Film no. 11

Metallurgical microscope

A metallurgical microscope can be used to examine the kind, proportion, size, form, and distribution of structural constituents.

Unlike transmitted-light microscopy of biological objects, the metallurgical microscope is a reflected light microscope.

Film no. 11 shows the "Epityp" 2 metallurgical microscope made by VEB Carl Zeiss of Jena, G.D.R., and it is supplemented by a schematic representation of the optical path in the microscope.

It is recommended that the applications of a metallurgical microscope be explained during a visit to a metals testing laboratory. The specimens examined using the microscope should be ground, polished, and etched metal surfaces.

The contents of film no. 11 can be discussed in connection with those of film no. 7 (etching possibilities), film no. 8 (macro- and micro-etching), and film no. 9 (coarse and fine grains).

In so far as examinations performed using metallurgical microscopes are concerned, it should be pointed out that what counts is the results obtained rather than details of methods of examination.

Film no. 12

Thermal analysis

This film can be used to explain metallographic analyses of metals and alloys made with a view to determining melting points and intervals. It should be pointed out that for a determination of solid state transformation points use should preferably be made of a dilatometer which allows changes in length to be measured, since the heat of transformation is too low for a thermal analysis to be done.

Film no. 12 shows the arrangement of an electrically heated furnace with the sample connected to the reference junction which, in turn, is connected with the measuring instrument. Also shown is a schematic diagram of a thermocouple with measuring and reference junctions. Be sure to again explain the operating principle of the thermocouple, if necessary. It is in connection with the discussion of thermal analysis that film no. 4 (crystal growth) and film no. 13 (curve of solidification) can be touched upon and discussed, respectively.

Film no. 13

Curve of solidification

This film can be used to again explain the process of crystallization and, at the same time, learn and practice the reading of diagrams. Also, this film can be used together with film no. 4 (crystal growth) to explain the thermodynamic theory of fusion and solidification. The film also shows individual phases of the process of crystallization in a didactically simplified and graphic form as well as the curve of solidification of lead of which the solidification temperature is 327°C. It should be pointed out that such an 'ideal curve' can be obtained under laboratory conditions only.

Film no. 14

Eutectic

This film shows, in a concentrated form, the solidification curves of five alloys, the constitutional diagram, and the schematic representations of structural patterns. Using this film, it is possible to explain the plotting of a constitutional diagram from cooling curves as well as the constitutional or state changes taking place during the cooling of individual alloys. Be sure to point out that structures constitute what is known as a crystal aggregate.

It is essential that students should realize that constitutional diagrams are stores of information on the states of alloys in dependence upon both temperature and concentration and that they are required for making and heat-treating alloys (concentration and temperature, respectively).

It is recommended to present the individual images in their proper order by covering portions of the film.

Film no. 15

Solid solutions

This film can be used to explain the constitutional diagram of complete miscibility of alloy components in the liquid and solid states, which is derived from the curves of solidification of four alloys. From the diagram there can be read changes taking place during the cooling and heating of alloys in dependence upon both temperature and concentration.

The micrographs show equal-appearance solid solutions of which the composition can be determined by chemical analysis only. By using the schematic representations for substitutional and interstitial solid solutions, it is possible for this subject matter to be discussed and repeated graphically.

Depending upon the procedure used by the instructor, portions of the film can be covered one after the other.

Film no. 16

Precipitations from solid solutions

This constitutional diagram with solid state miscibility gaps and the cooling curve of an alloy with the corresponding micrographs (in dependence upon temperature) can be used to explain the process of hardening by precipitation and the changes in the properties of alloys which are due to dispersion. The schematic micrographs enable students to arrive at a better understanding of the process of precipitation and the change in solubility of an alloy with decreasing temperature.

Students should realize that properties of materials are temperature-dependent.

The contents of this film should be discussed in steps corresponding to individual stages of instruction.

Film no. 17

Stress-strain diagram

The objective of conveying knowledge of the workability of materials is to enable students to interpret processes proceeding within materials during working, for example. To prepare students for a discussion of processes of deformation, this stress-strain diagram of a soft type of steel which includes the most important parameters as well as the elastic and plastic strain, respectively, can be used to explain such characteristics as strength and strain. This film can also be used for a discussion of materials testing. It is essential that special importance be attached to the distinction between elastic and plastic strain and elastic and plastic deformation.
The contents of film no. 17 should be discussed in connection with those of film no. 18 (process of deformation) and film no. 19 (work hardening of copper).

Film no. 18

Process of deformation

Film no. 18 shows the stages of deformation of a lattice portion in six individual images. Preferably, part of a lattice model should be used to explain the terms elastic and plastic deformation. Sliding in plastic deformation occurs along a slip plane and is made possible by dislocation. It is appropriate for the contents of film no. 6 (dislocation) to be discussed again in this context.
It is essential that knowledge of the polycrystalline material involved in the elementary process of sliding, which was here acquired on a portion of the lattice only, should be extended to cover the entire material.
The contents of this film should be discussed in steps.

Film no. 19

Work hardening of copper

Work hardening of metals can be regarded as being due to an increase in dislocation density, the accumulation of dislocations at obstacles, and the addition of concentrations of stresses around individual dislocations. This film can be used to discuss cold working results. It shows the changes in tensile strength, elongation, and reduction in area of pure copper during wire drawing and enables several curves to be compared. Intentional and unintentional changes in properties due to cold working should be discussed in detail.

This film enables students to read and interpret the diagram and compare the structures of soft and work-hardened copper wire.

Film no. 20

Recrystallization of copper

After having clarified the term work hardening, it is essential to explain the terms recrystallization, cold working, hot working, and critical amount of deformation. Students should realize that properties of materials have to be influenced by increasing the temperature and causing the structure to re-form in the solid state far below the melting temperature.

This film shows the variation in tensile strength and elongation as a function of the temperature of annealing. The recrystallization range is supplemented by schematic micrographs. The film allows to explain processes proceeding during recrystallization, desirable heating (e.g., annealing as an intermediate stage of wire drawing in order to make possible additional drafts), and undesirable heating (e.g., in the soldering of contact springs which may involve a loss of elasticity). Be sure to distinguish between cold and hot working in dependence upon the recrystallization temperature of a metal ($T_R \approx 0.4\ T_S$ in $^{\circ}K$). Also, point out the relationship between time of annealing and structure.

Film no. 21

Iron-carbon diagram no. 1

The contents of films 21 through 26 have to be discussed on the basis of the iron-carbon diagram described in the literature. The forms of constitutional diagrams can be assumed to be known. Since structures of alloys are to be considered crystal aggregates, the modification of iron can also be dealt with here.

This film shows, in the left and right halves thereof, the cooling curve of pure iron and the iron-carbon diagram up to 2 % of C (steel corner), respectively, as well as schematic micrographs of steels having 0, 0.4, 0.8, and 1.2 % of C at temperatures below 723°C. Explain that the different solubility of iron modifications for carbon and the consequent change in the temperature of transformation lead to the iron-carbon diagram.

It is essential that film no. 21 be discussed, step by step, in connection with the contents of film no. 24 (ferrite-austenite), film no. 25 (primary and secondary cementite), and film no. 26 (pearlite-ledeburite).

Film no. 22

Iron-carbon diagram no. 2

This film can be used in vocational education and training. It shows the complete iron-carbon diagram and a graphic representation of the structural rectangle, which provides information about the proportional percentages of structures present under equilibrium conditions. It is essential to point out that this diagram corresponds to a state of equilibrium (extremely slow heating and cooling), whereas this equilibrium is often disturbed in engineering and technical processes.

After having discussed the contents of films 24 through 26, it is appropriate to replace the phase designations in state fields with the names of the respective structures. For this, film no. 22 has to be covered with a blank film on which the diagram is supplemented by dashed vertical lines at 0.8, 2.06, and 4.3 % of C as well as by the names of structures.

Film no. 23

Steel corner of the iron-carbon diagram

This representation forms the basis for all heat treat methods. It is for this reason that knowledge of the iron-carbon diagram with steel corner is of particular importance. To be able to correctly interpret all temperature-dependent processes proceeding within a particular material, it is recommended to discuss variations in the structure of steels with 0.4, 0.8, and 1.6 % of C.
By partly covering the film, it is possible to draw the student's attention to the steel whose structure is being discussed.

Film no. 24

Ferrite-Austenite

The original micrographs (200 : 1) in this film show the ferritic and austenitic structures of iron. Since austenite cannot generally be observed at room temperature, a high-alloy austenitic chromium-nickel steel had to be used for examinations.

Film no. 25

Primary and secondary cementite

This film shows the structure of primary cementite in ledeburite (at a scale of 100 : 1) and the structure of secondary cementite in pearlite (at a scale of 500 : 1).
Primary cementite is the bar- or needle-shaped structural constituent of hypereutectic iron-carbon alloys. It is precipitated from the melt in the form of platelike crystals along the C - D line (iron-carbon diagram).
Secondary cementite is a structural constituent of hypereutectic iron-carbon alloys appearing as grain-boundary

cementite or, in the case of higher carbon contents, as needles in pearlite. It is precipitated, along line E - S, from gamma-iron solid solutions because of diminishing solubility.

Film no. 26

Pearlite-Ledeburite

This film shows the structures of both pearlite and ledeburite (the scales being 500 : 1 and 100 : 1 for pearlite and ledeburite, respectively). When showing the structures of pearlite and ledeburite it is necessary to consider that ledeburite (liquid-solid transition) is, in general, much coarser in grain than pearlite (solid-solid transition). The metallographic specimens were etched using 3 % alcoholic nitric acid.
Ledeburite is a eutectic that is composed of austenite and cementite. Pearlite is a lamellar conglomerate of ferrite and cementite.

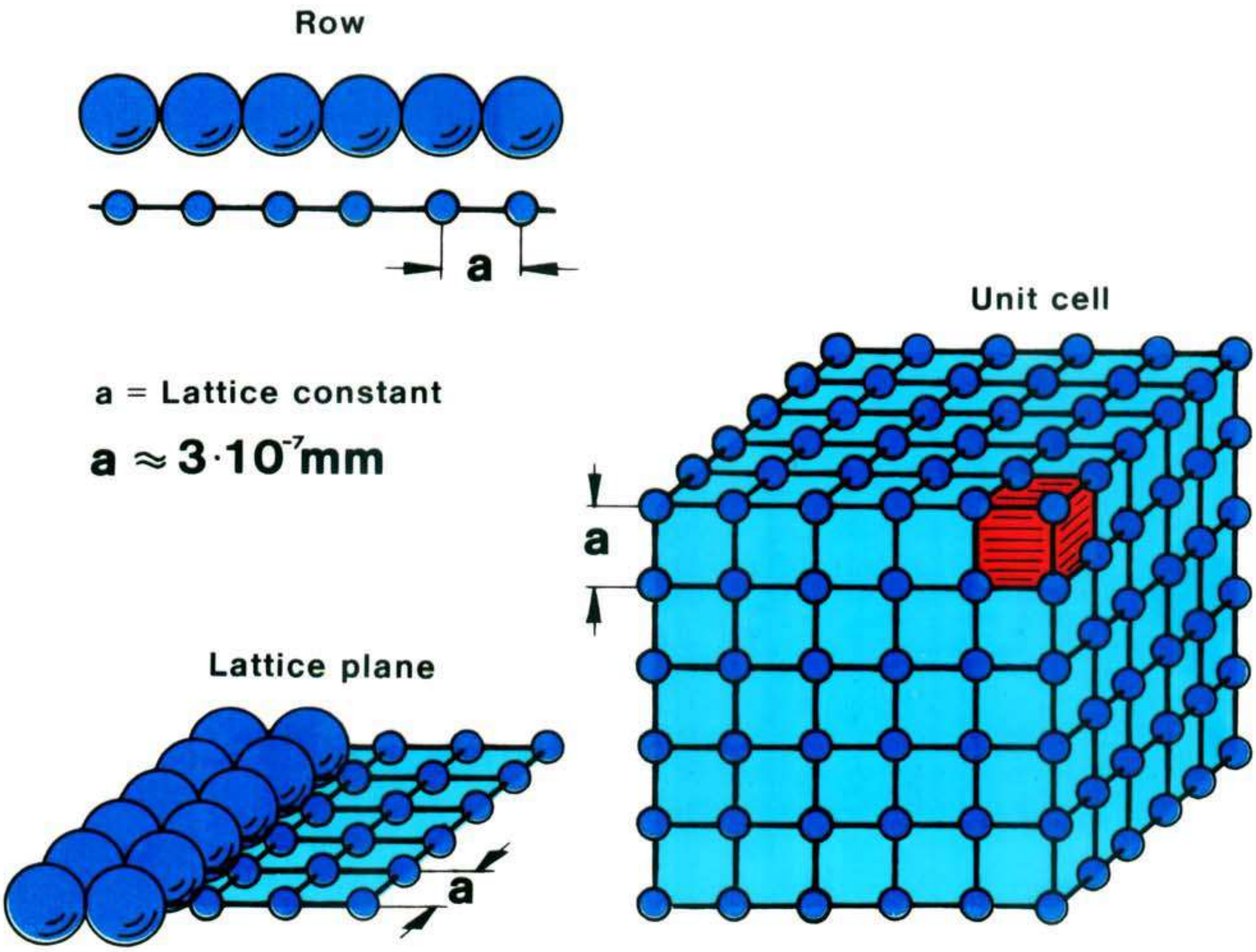

Crystal lattice

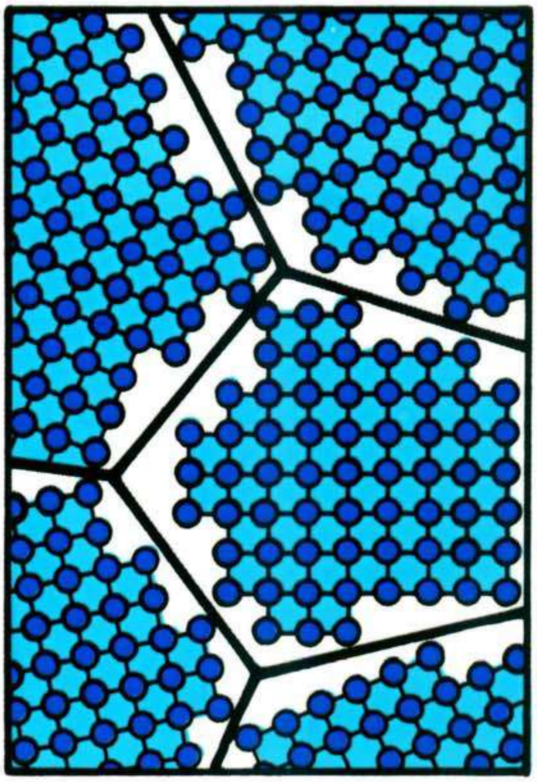

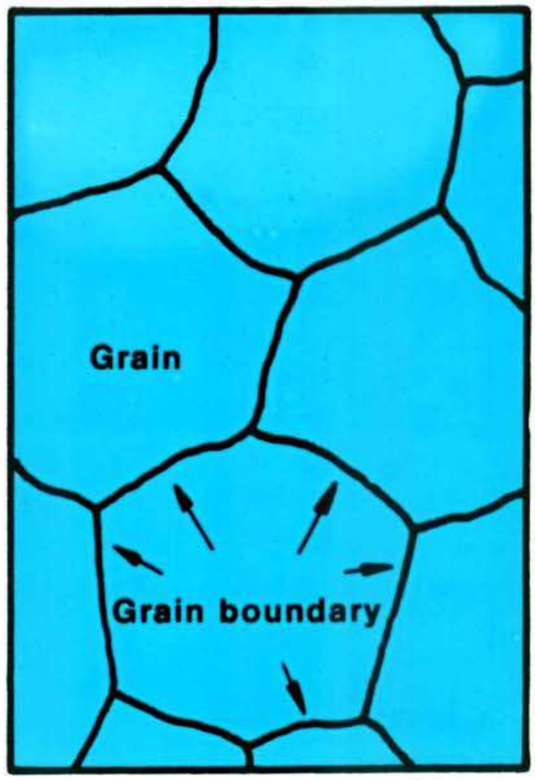

Grain and grain boundary

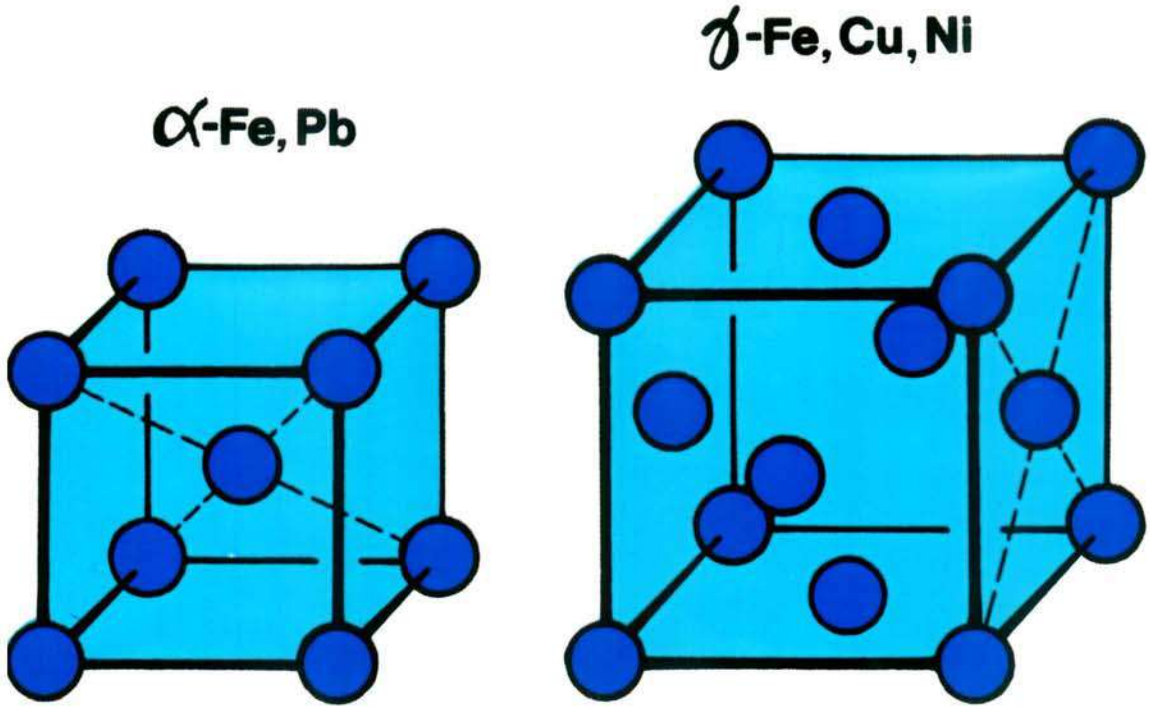

body-centred cubic

face-centred cubic

Unit cells

MADE in GDR

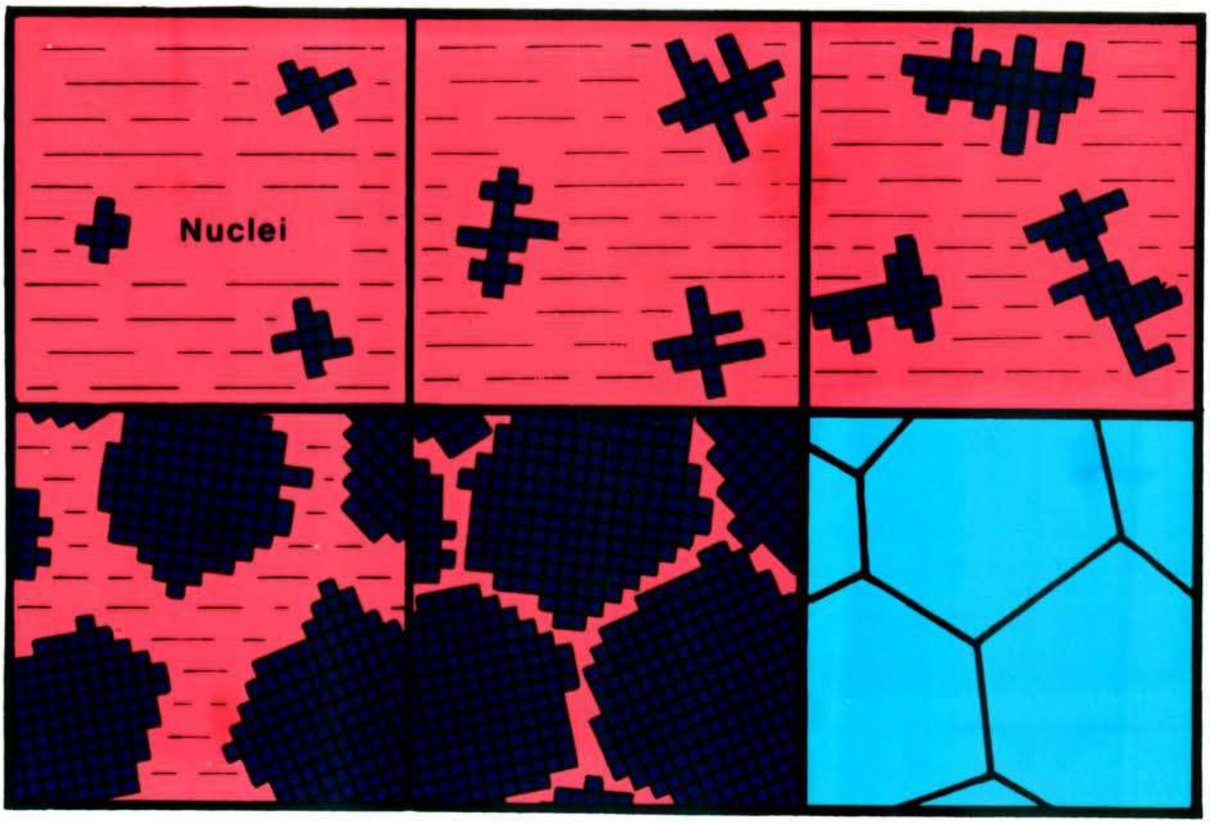

Rosenhain's diagram

Crystal growth

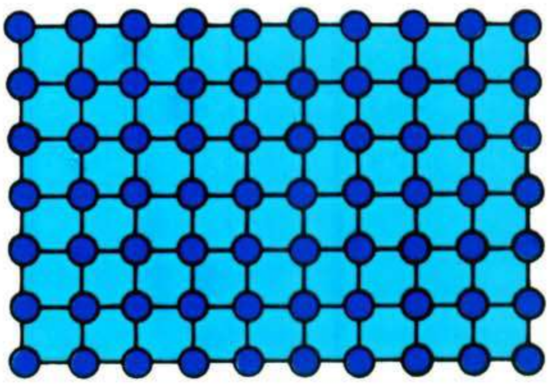

Ideal lattice

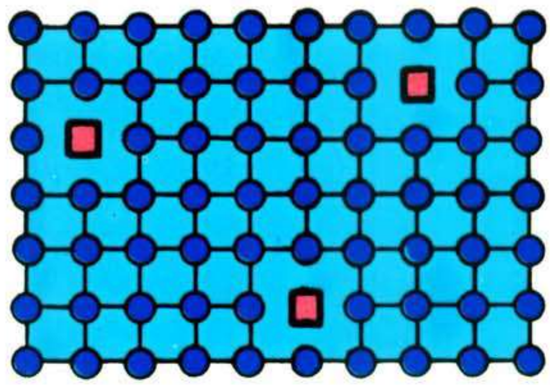

Vacant lattice sites

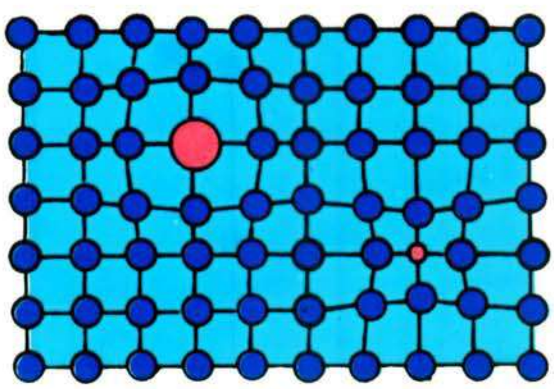

Substitutional atoms

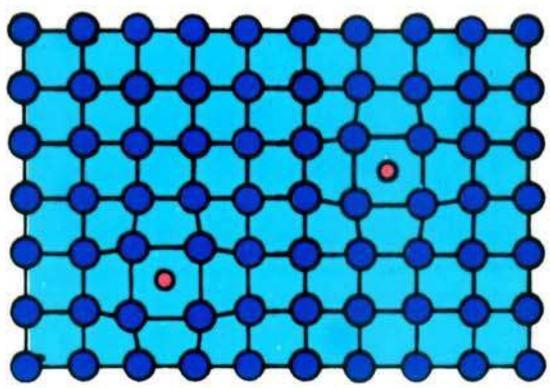

Interstitial atoms

Real structure

MADE in GDR

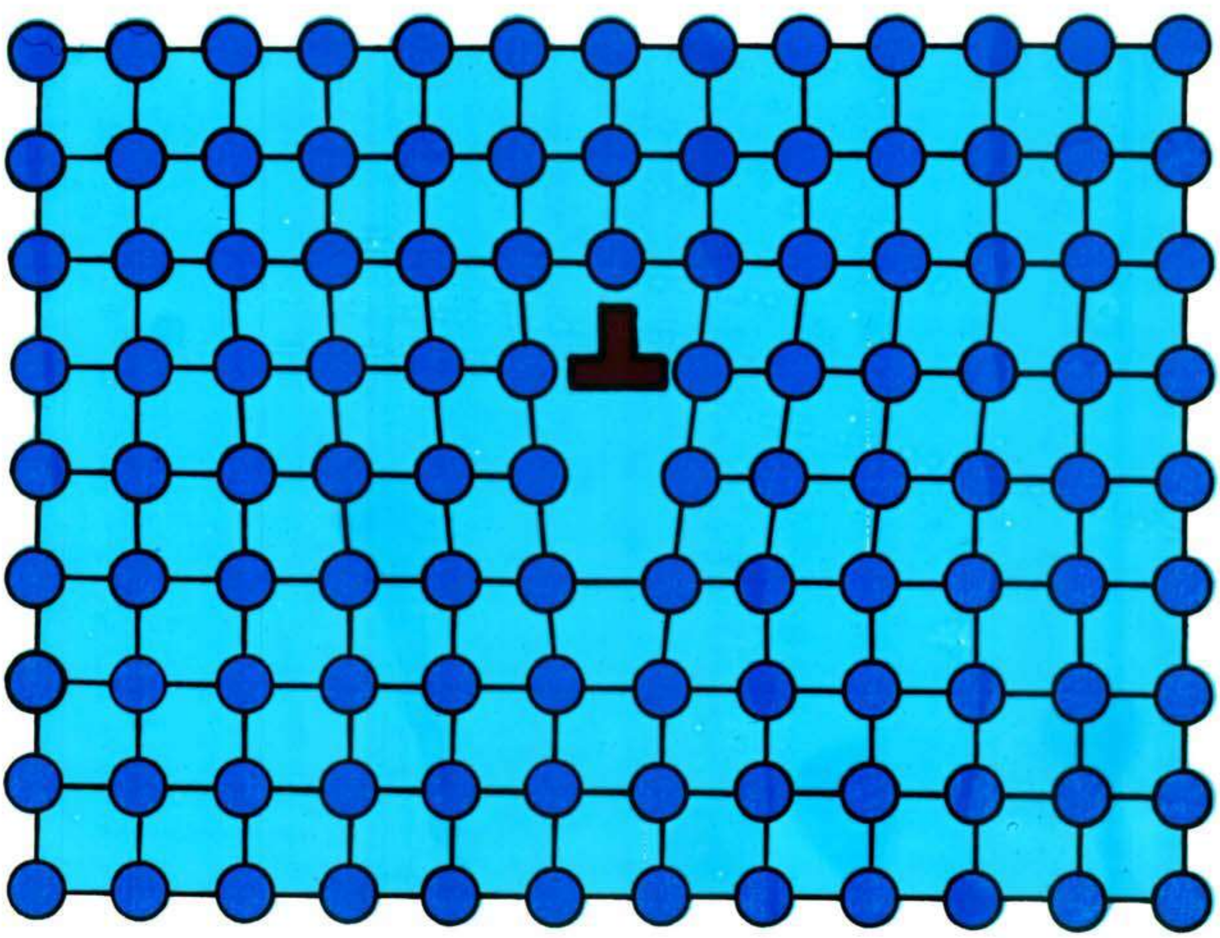

Dislocation

Copper

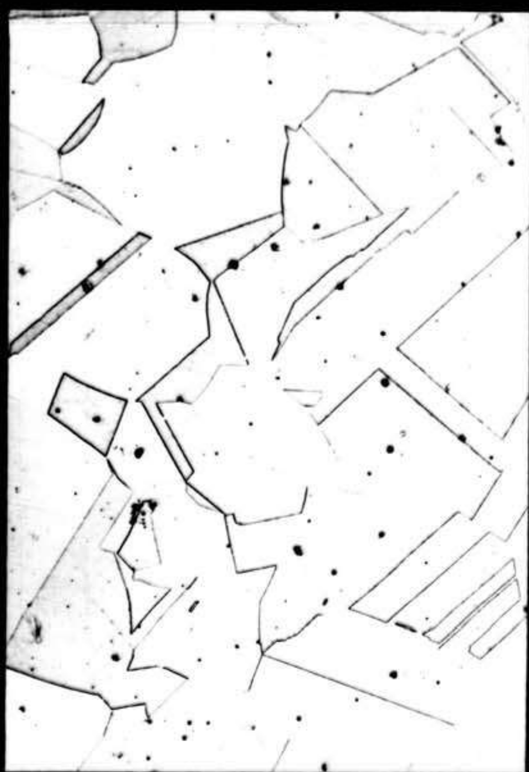

100:1

Etching bringing out grain boundaries in relief

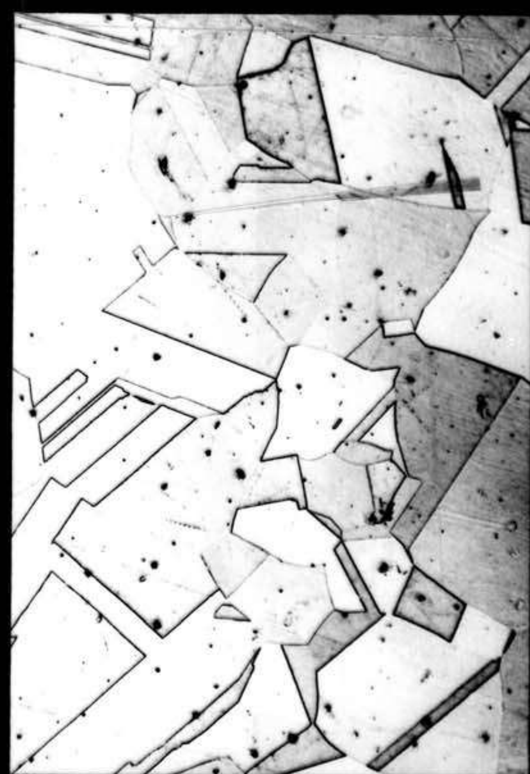

100:1

Contrast etching

Etching possibilities

1:1
Pure aluminium ingot

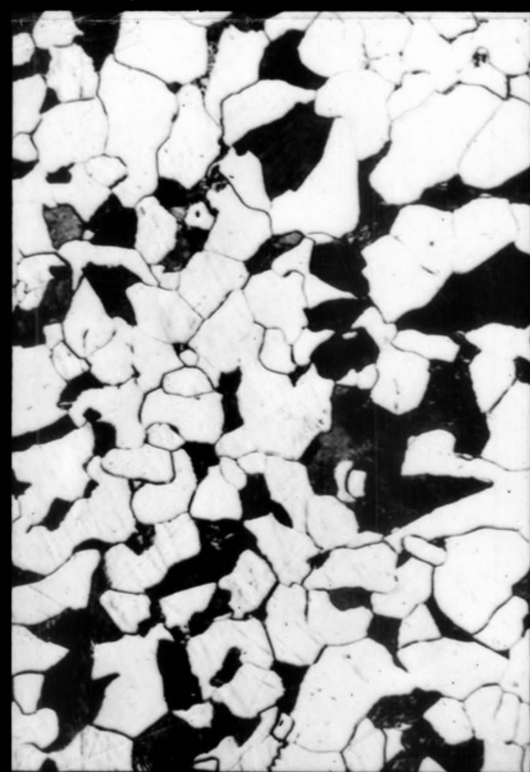

100:1
Mild structural steel
Ferrite and pearlite

Macroetching and microetching

0,02 % C steel

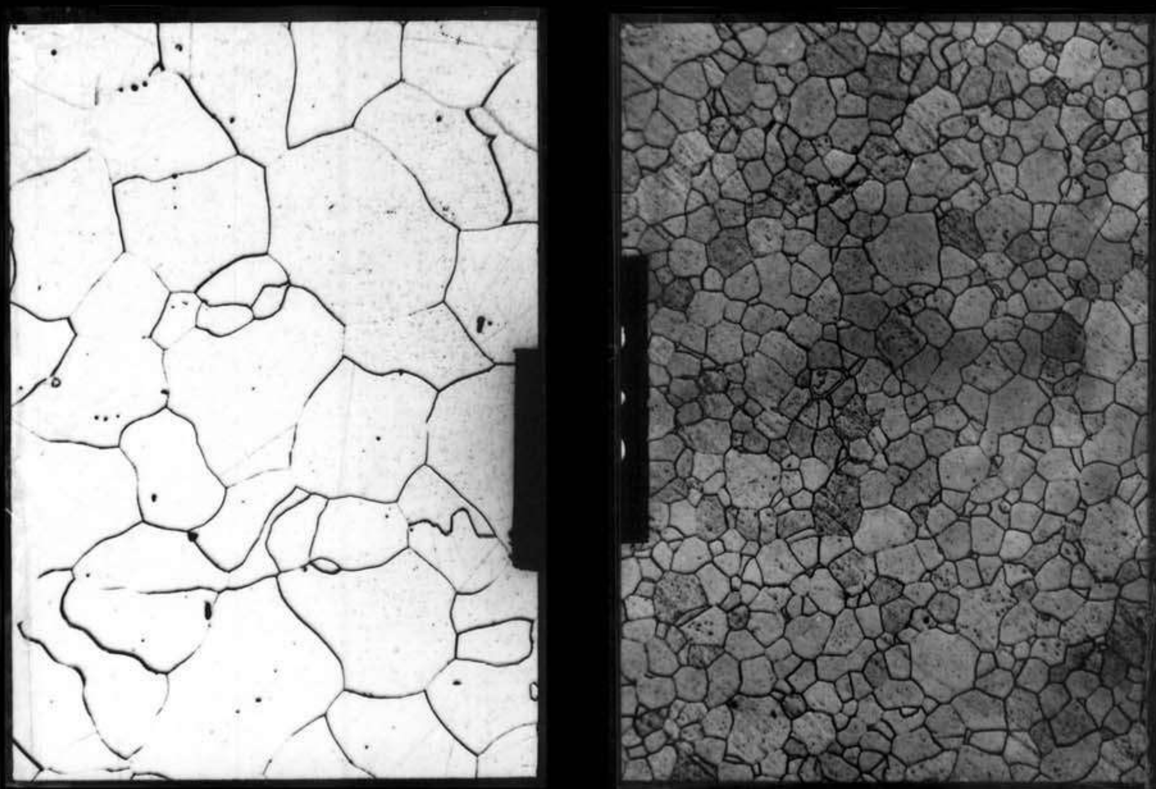

100:1 | 100 : 1

31000 ym^2 | **3900 ym^2**

Coarse grain and fine grain

1:1
Oberhoffer etching

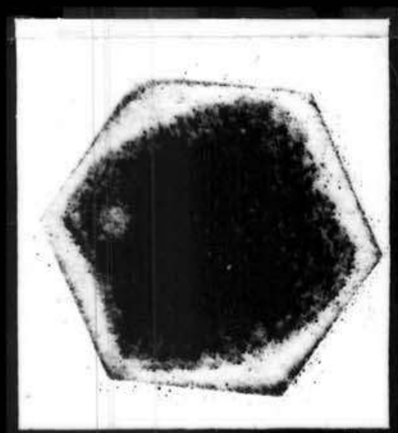

2:1
Baumann cast

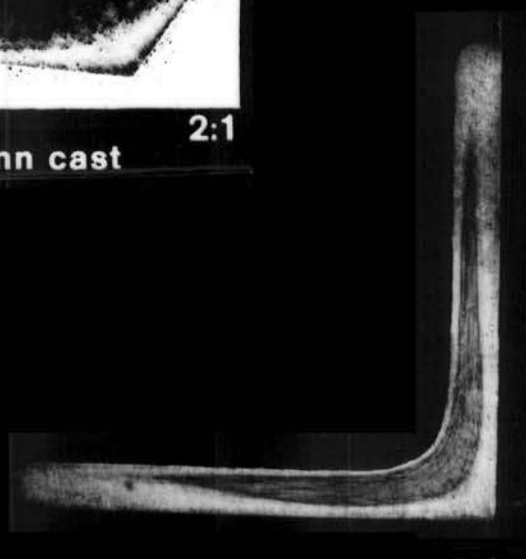

Heyn etching
1:1

Segregations in unkilled steel

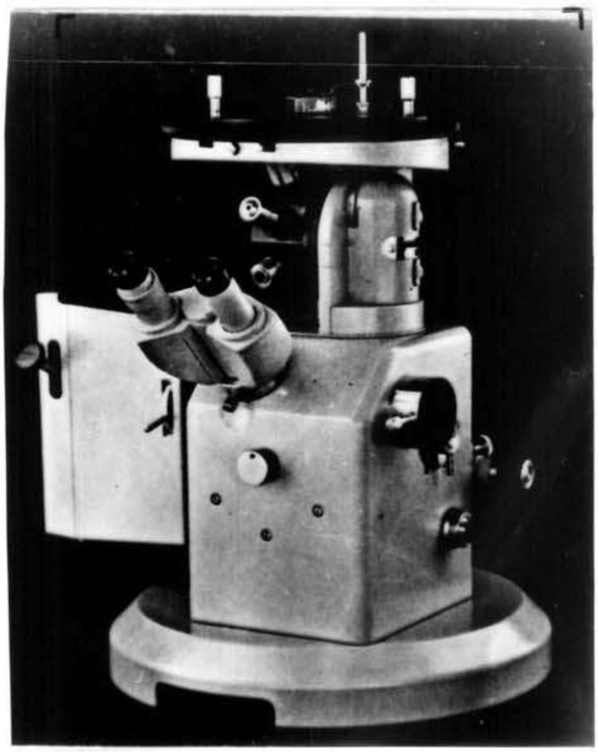

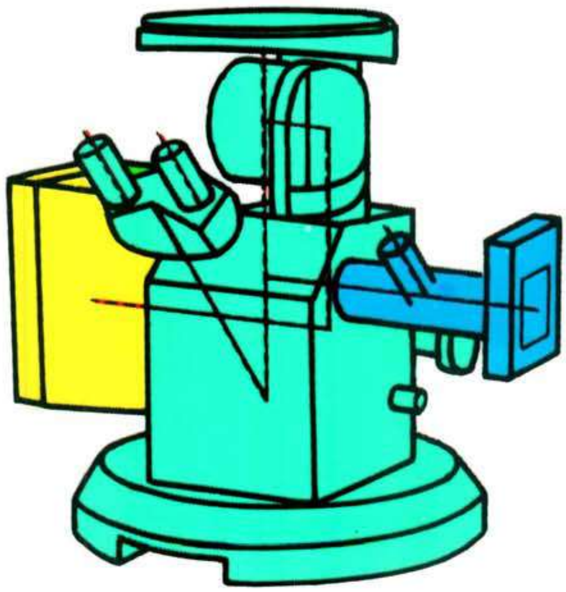

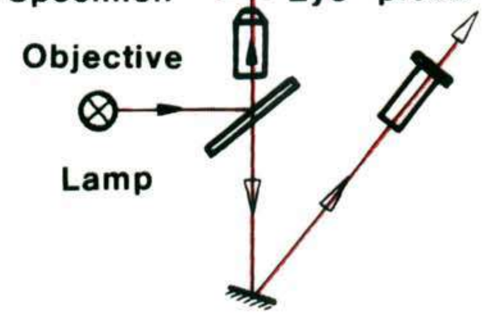

Metal microscope

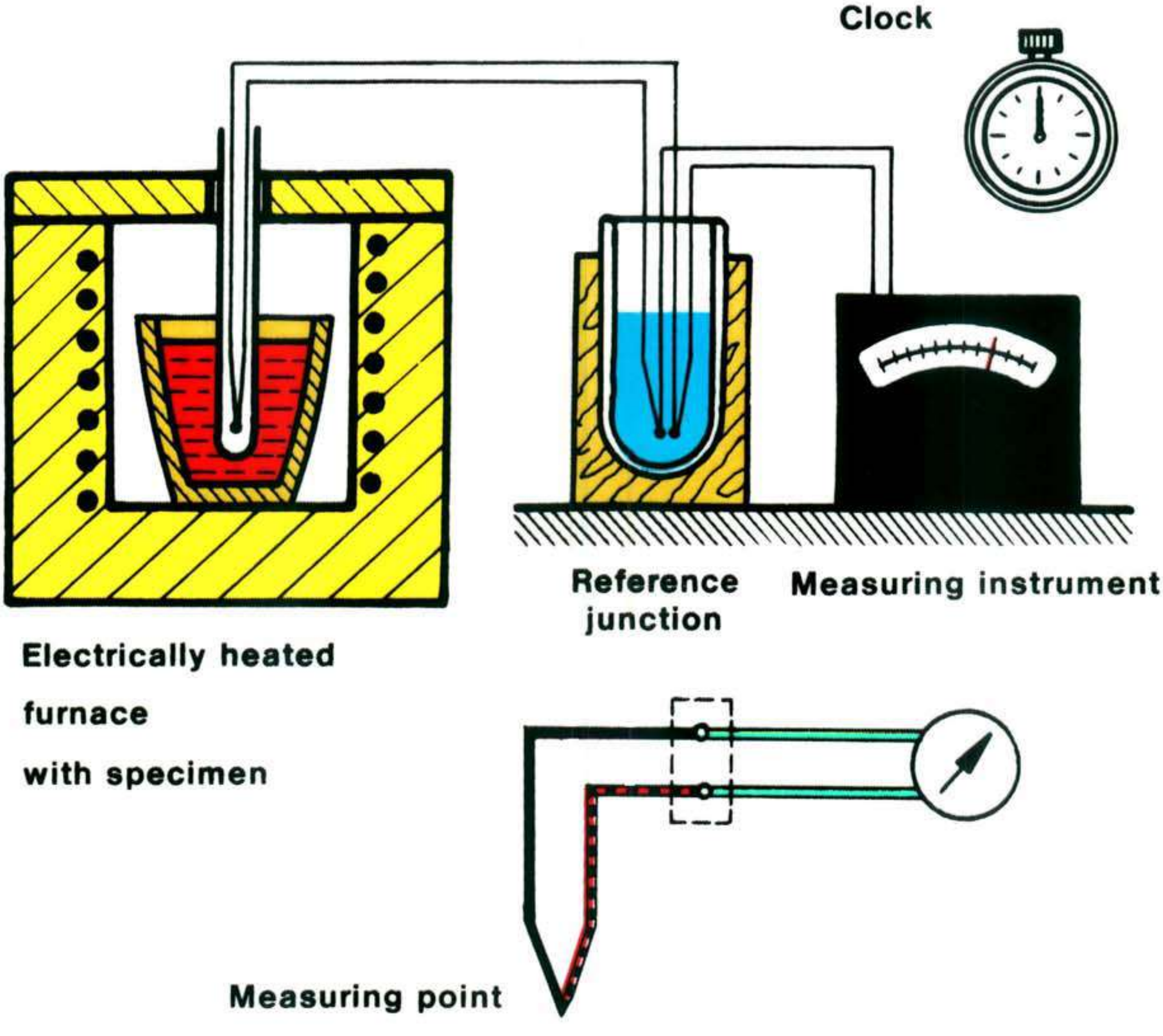

Thermal analysis

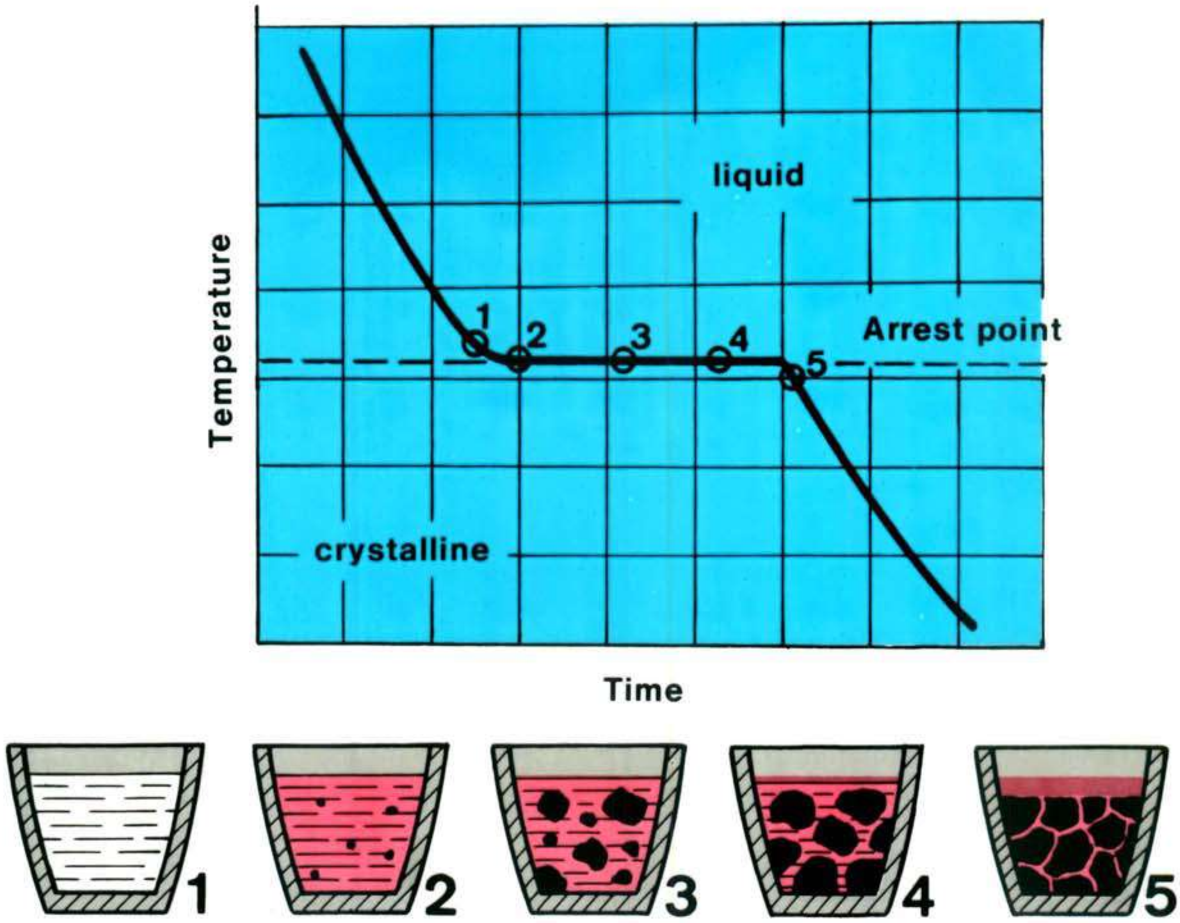

Solidification curve

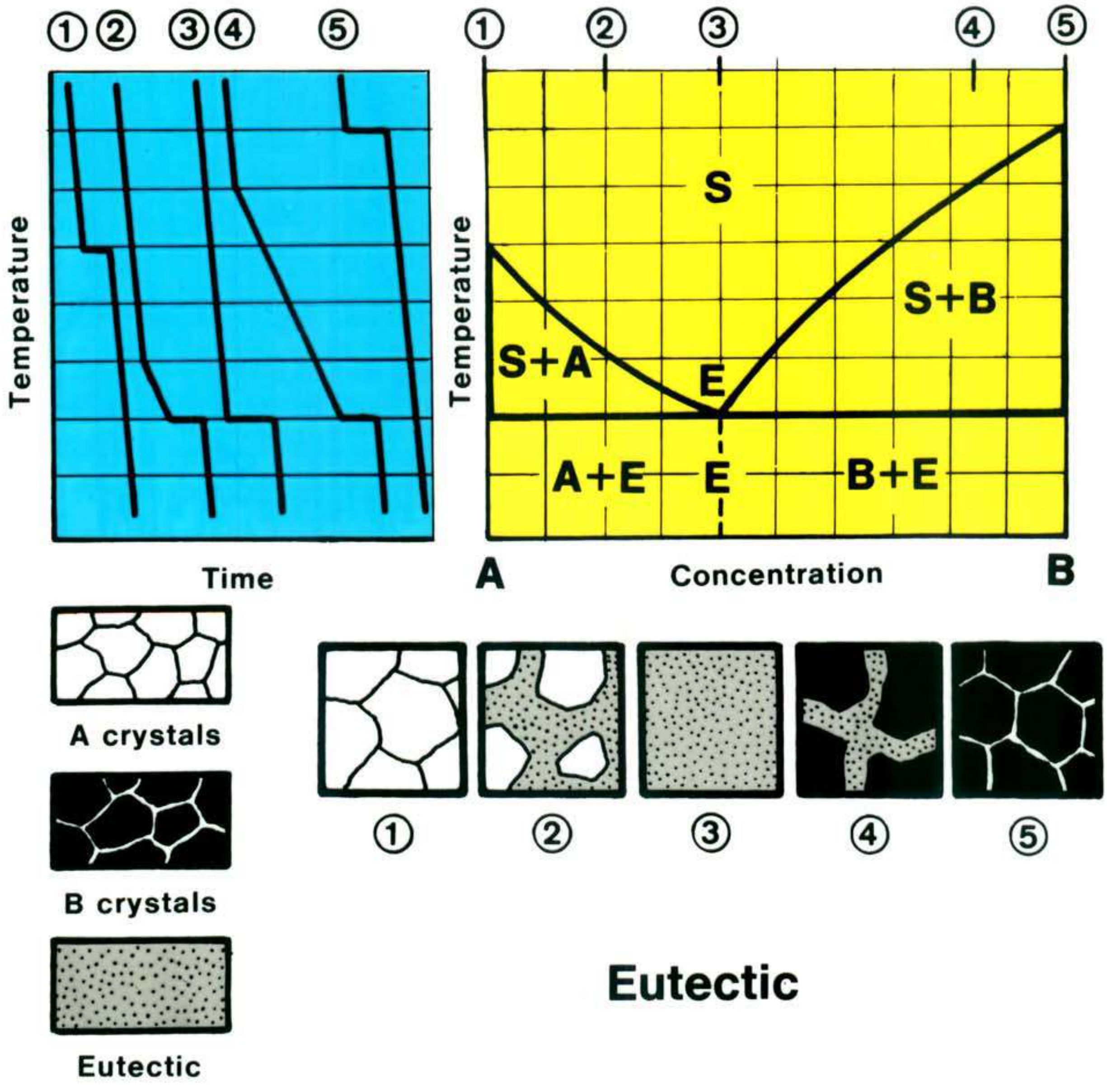
①②③④⑤
Temperature
Time
①②③④⑤
S
S+B
S+A
E
A+E
E
B+E
Temperature
A
Concentration
B
A crystals
B crystals
Eutectic
①②③④⑤

Eutectic

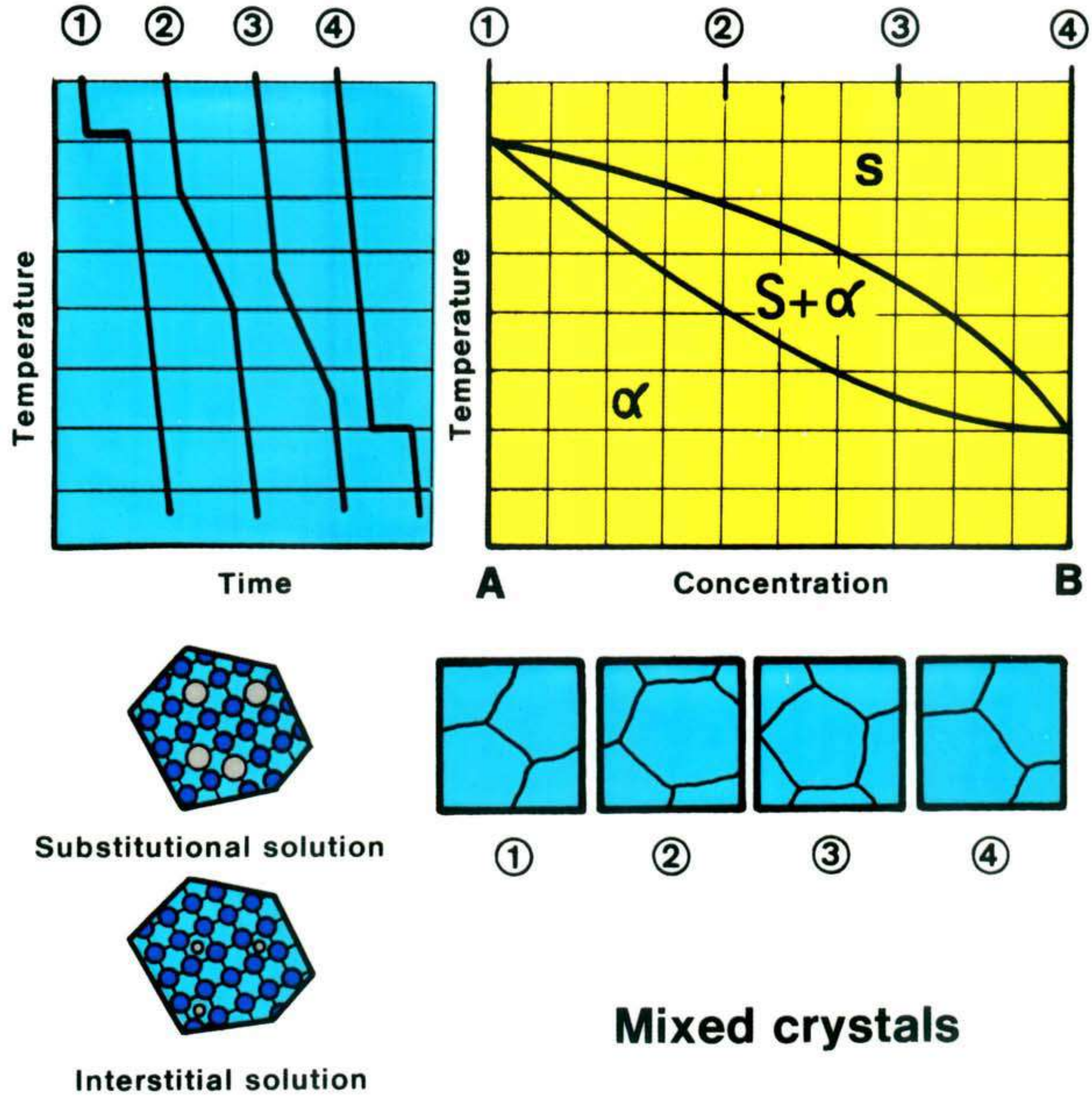

Mixed crystals

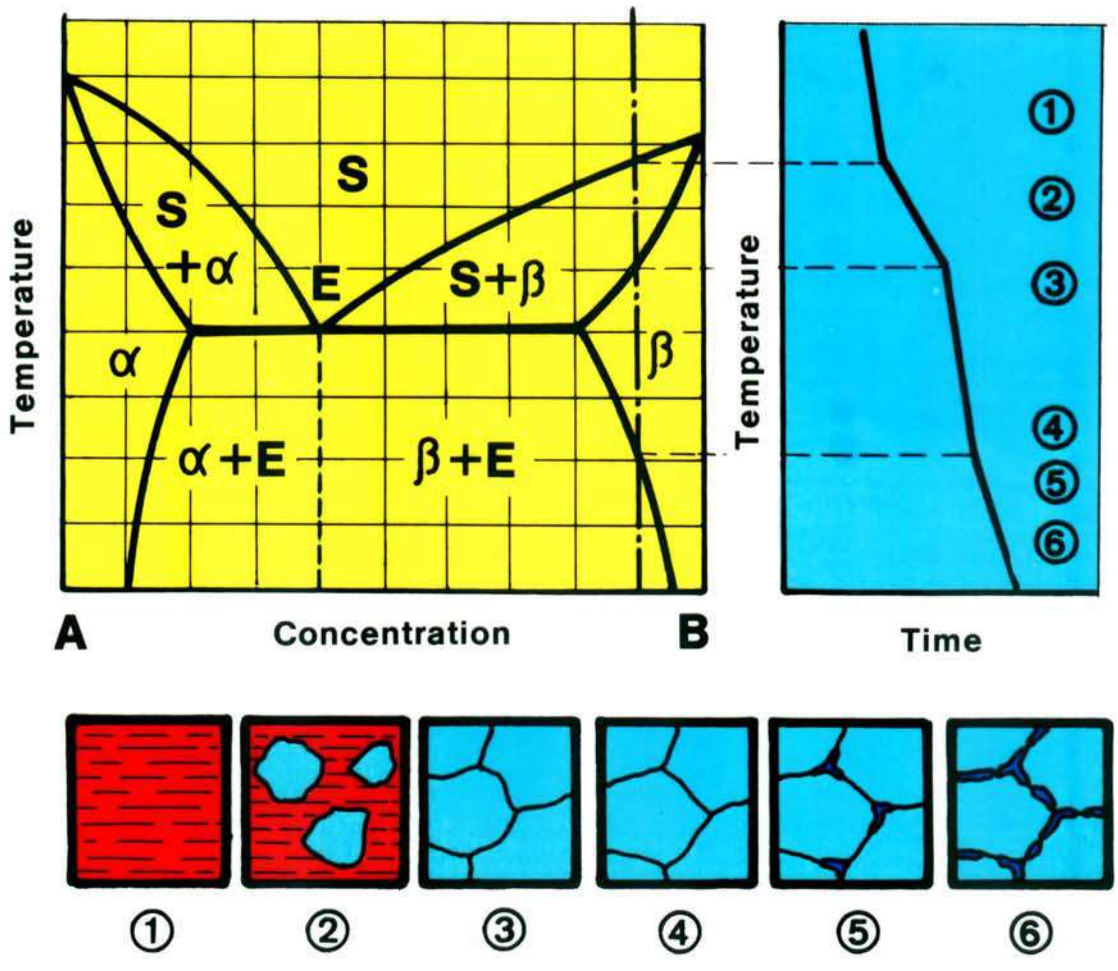

Precipitations from mixed crystals

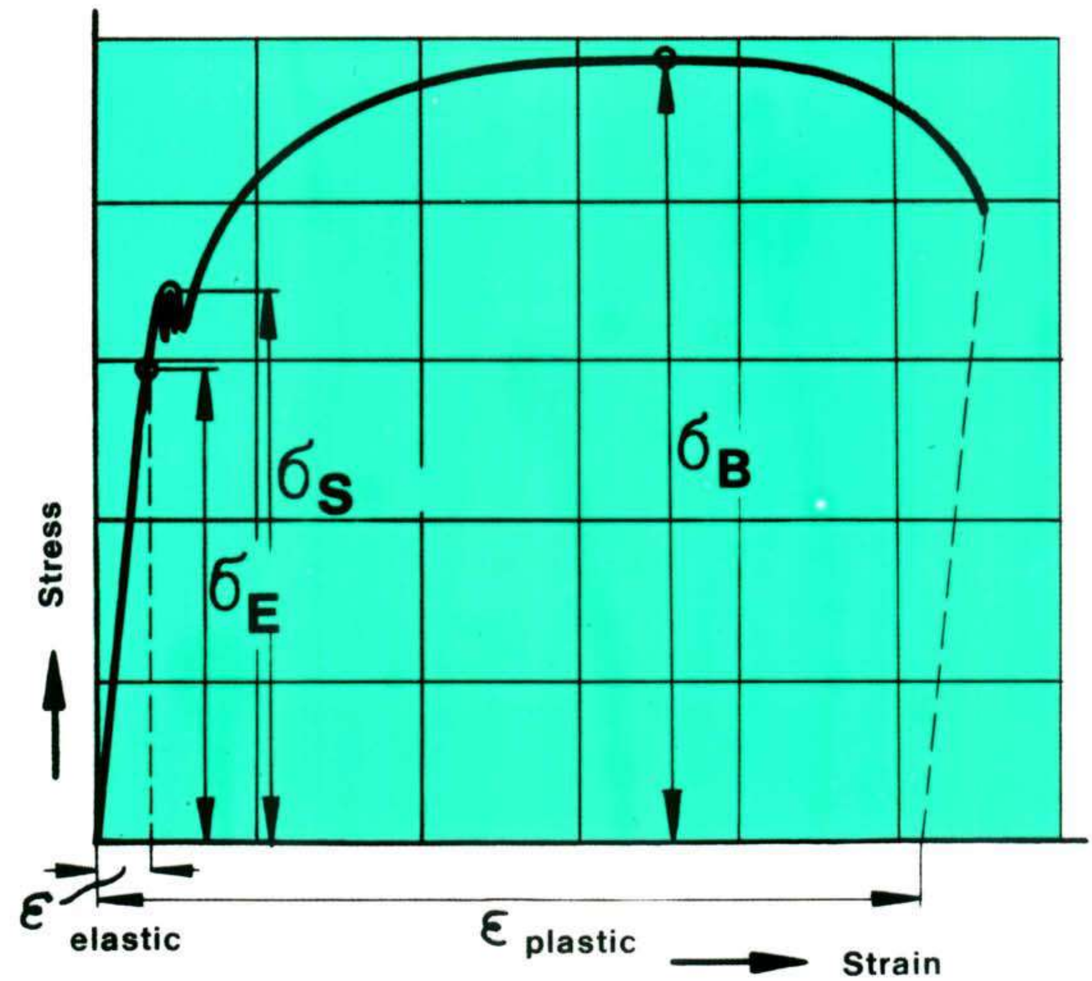

Stress - strain curve

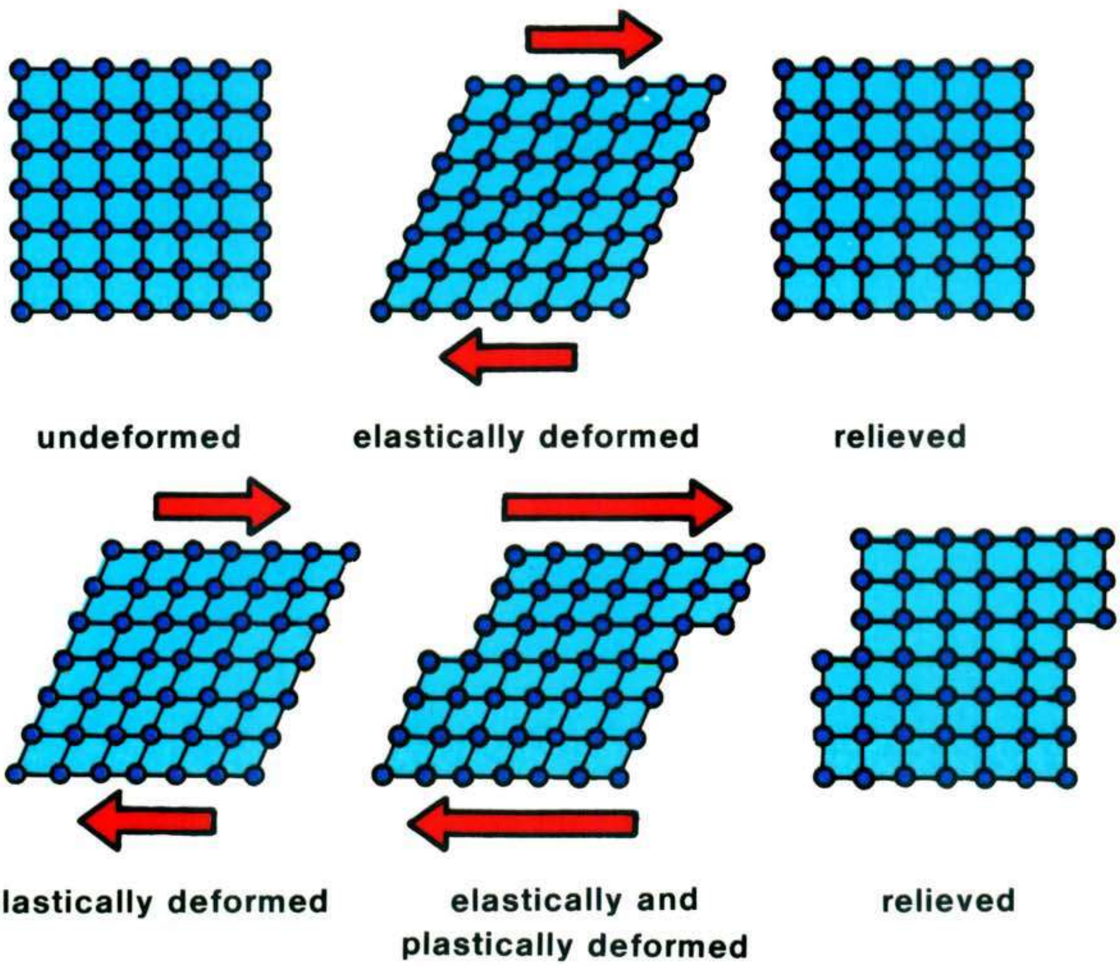

Deforming process

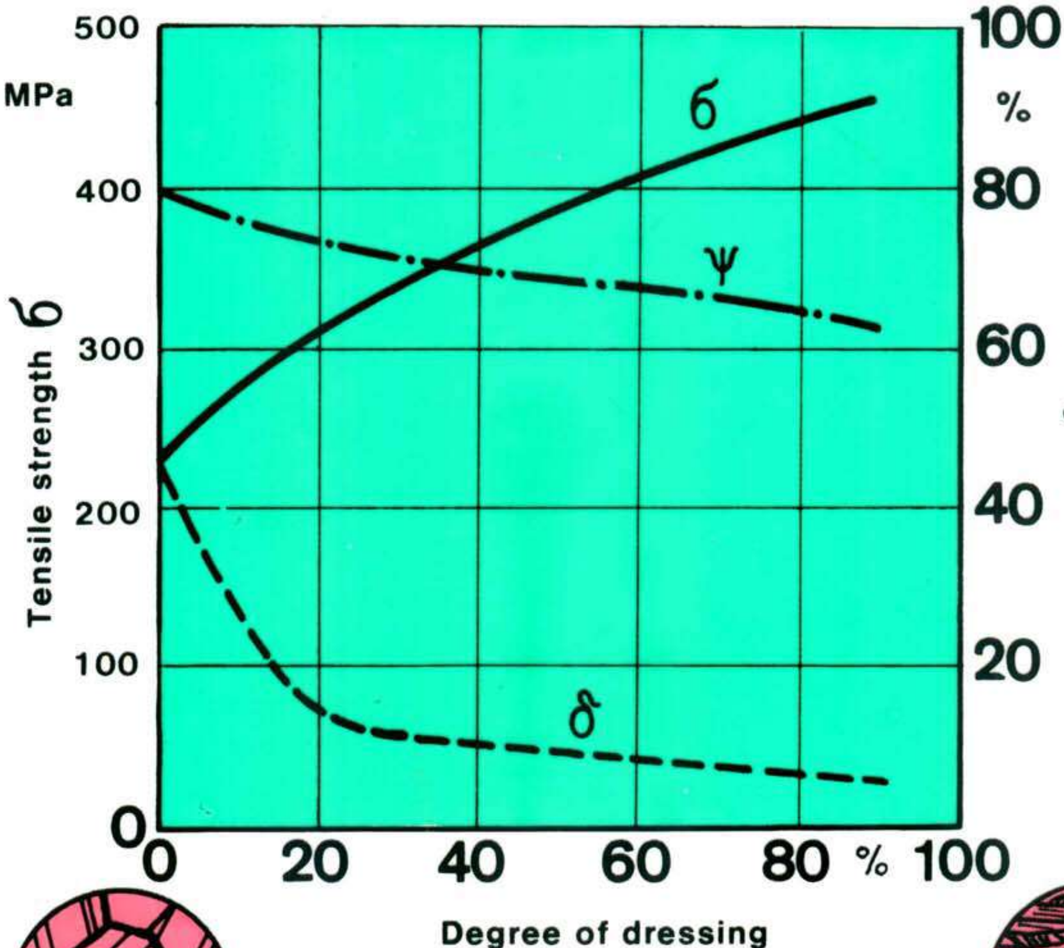

Workhardening of copper

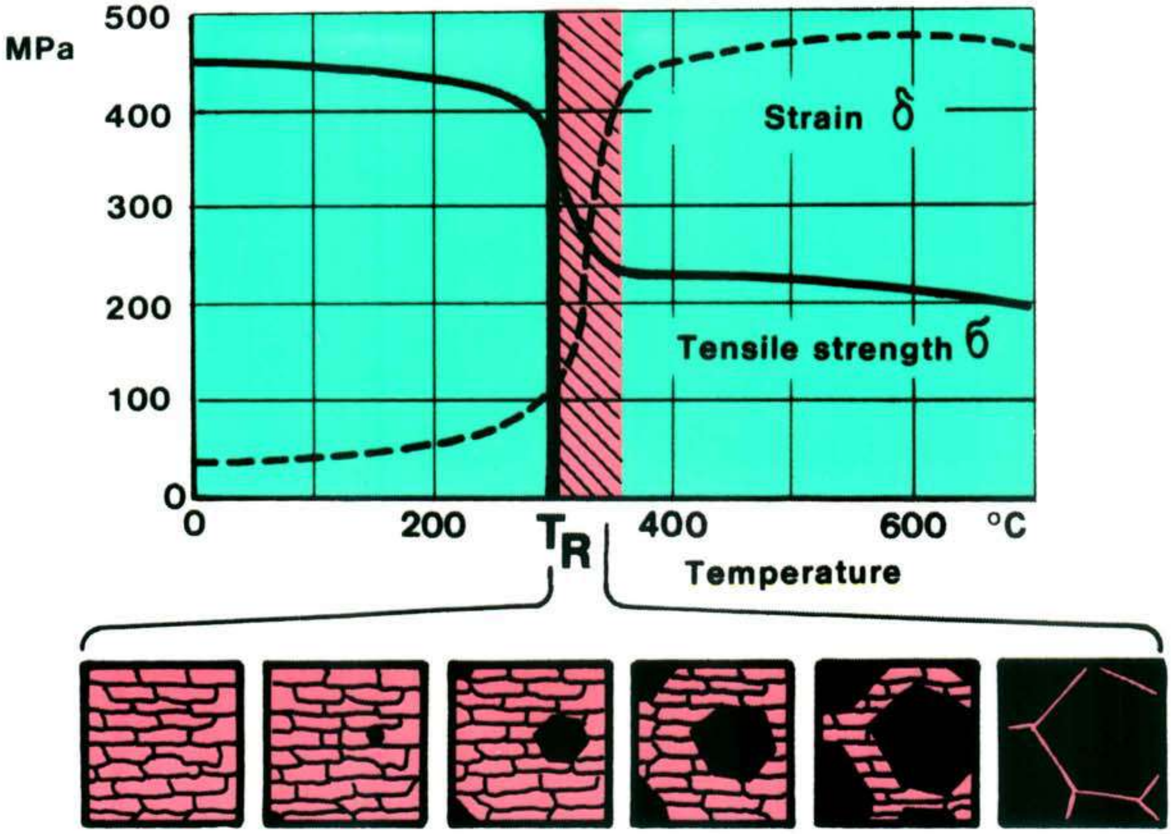

Recrystallization of copper

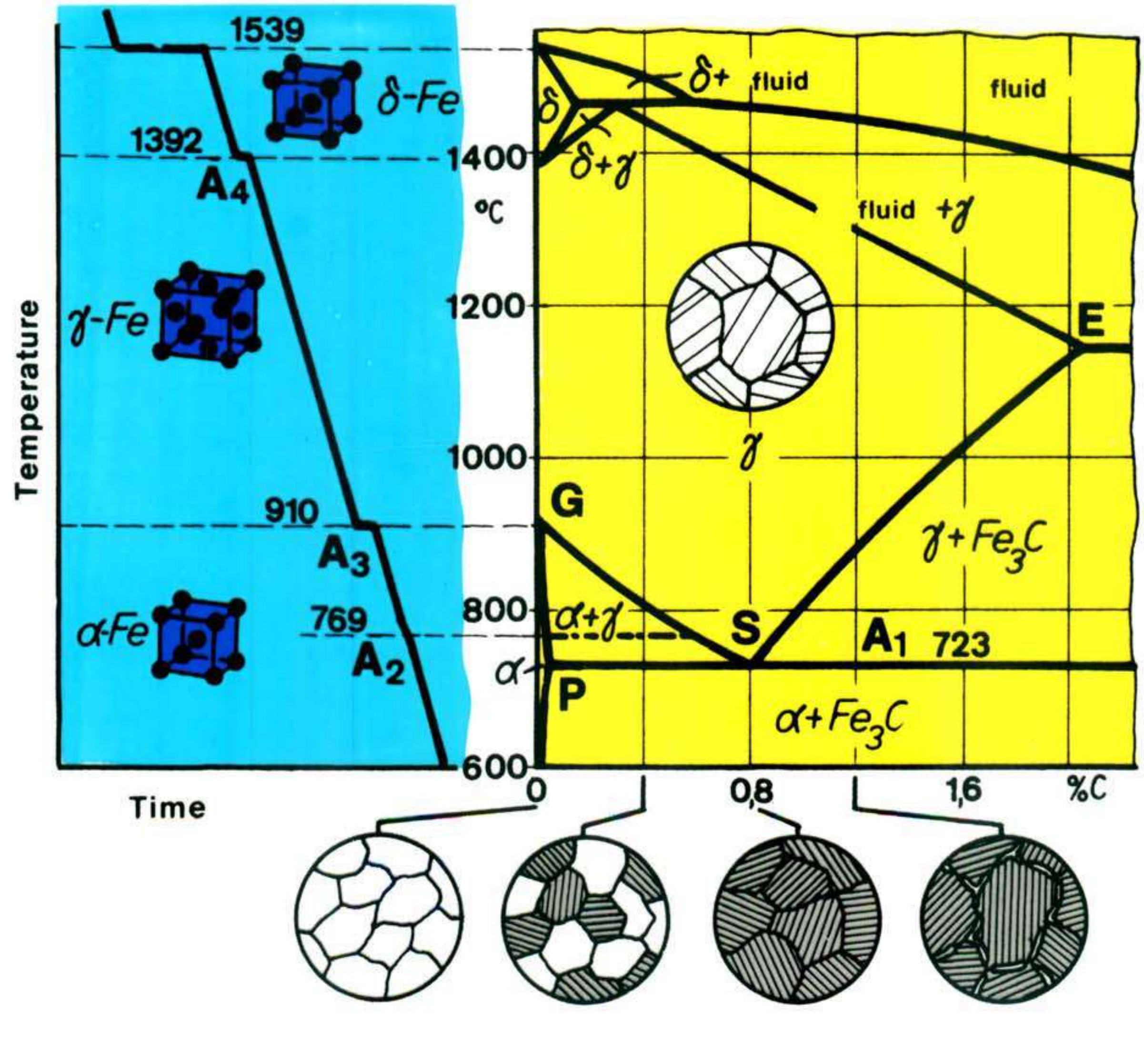

Iron - carbon diagram

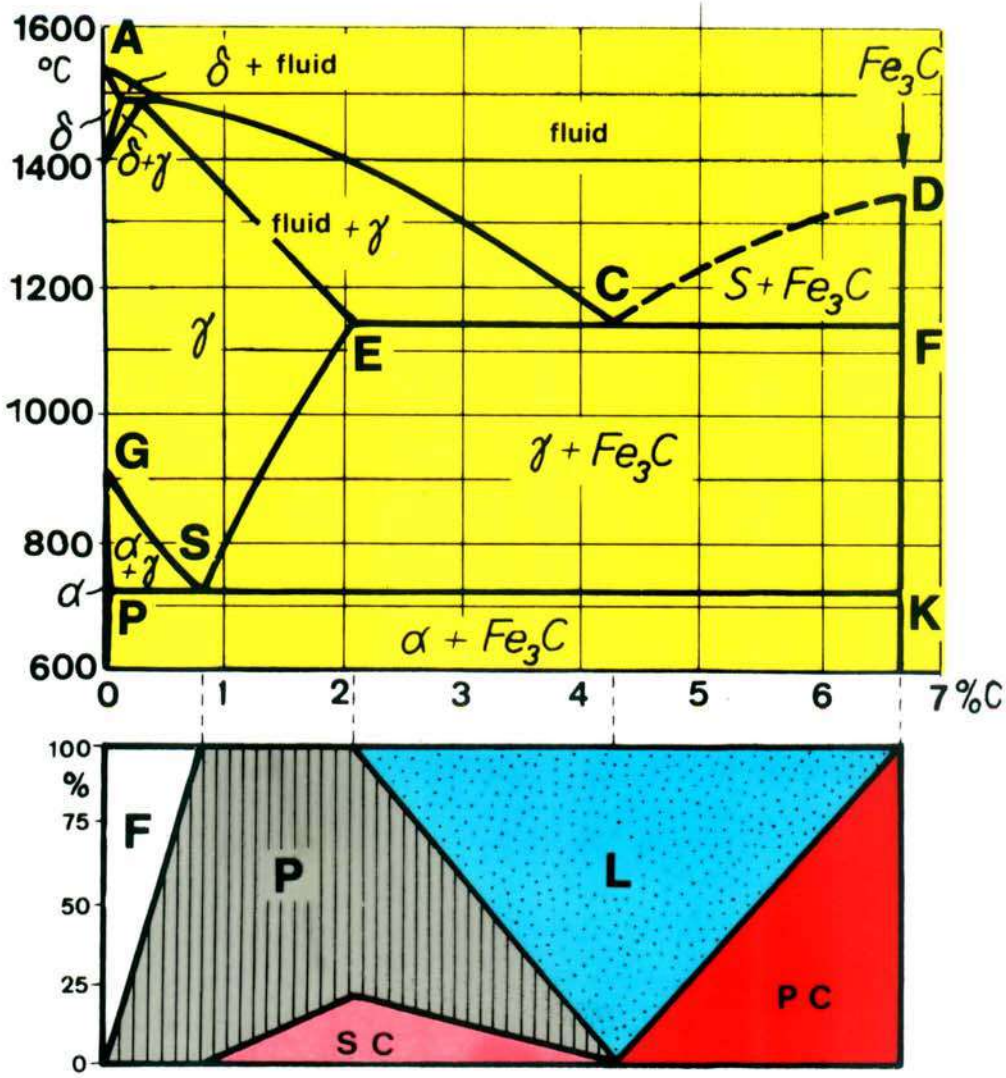

Iron - carbon diagram

MADE in GDR

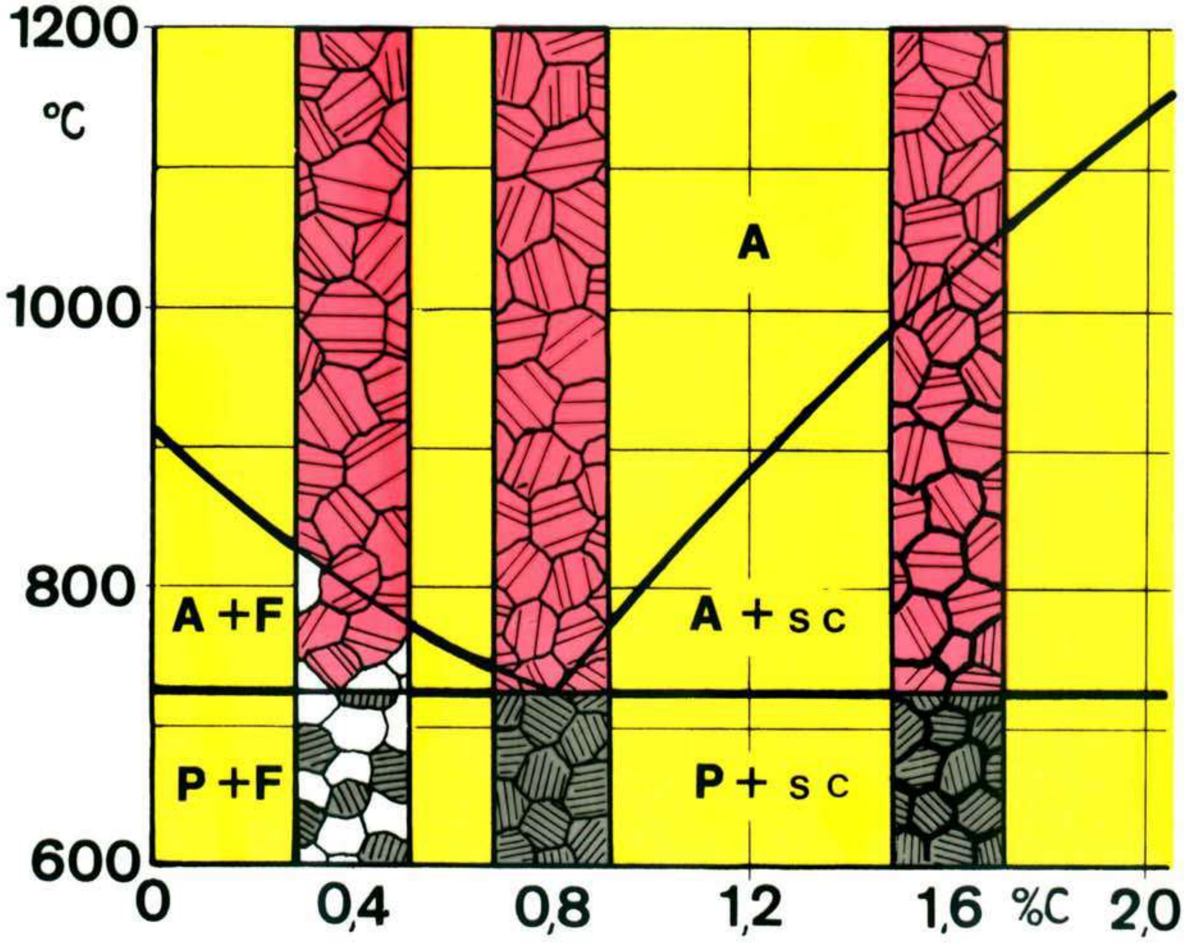

Steel corner - piece

200:1

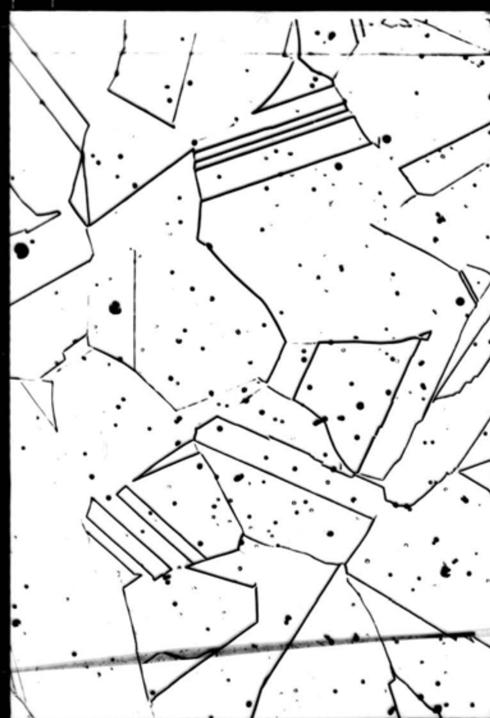

200:1

Ferrite - Austenite

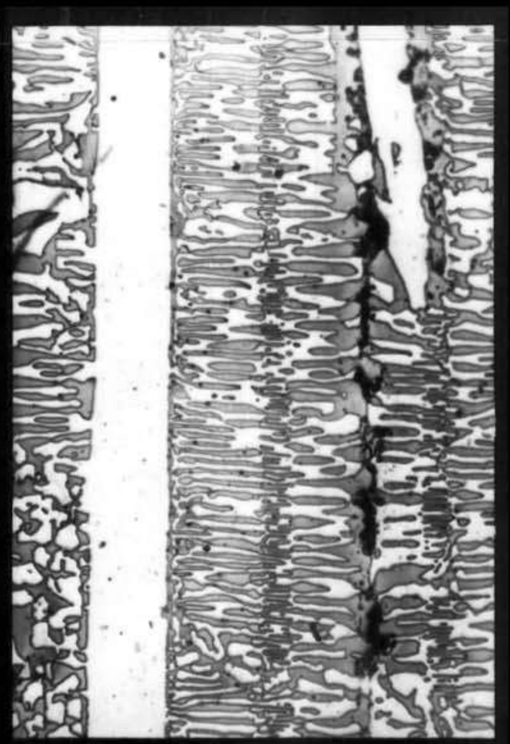

100 : 1

500 : 1

Primary and secondary cementite

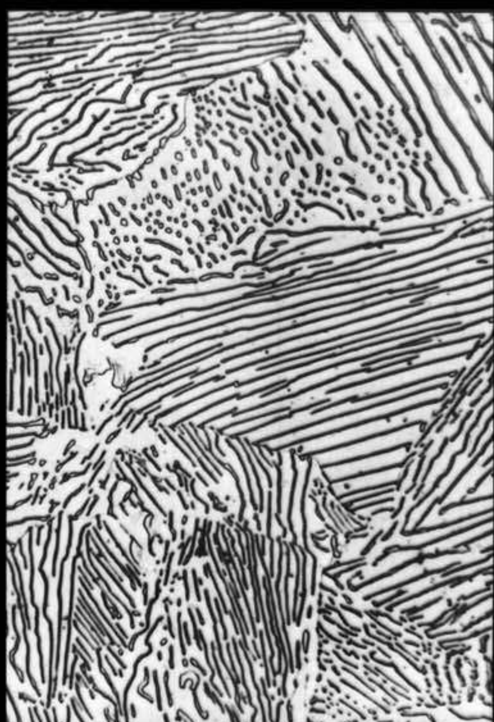

500 : 1

100 : 1

Pearlite - Ledeburite

MADE in GDR
DEWAG
© Signograph

METAL

Ferrous Materials

PROFacto

Author:
Ing. Gerhard Umlauff,
Hennigsdorf Institute of Technology

The micrographs included in this series of projection films on ferrous materials were made available by Laboratory of Metallography, Materials Engineering Department, Hennigsdorf Institute of Technology.

Designed by
Günter Brabant

Prepared for publication by
Dipl.-Ing. paed. Marianne Quendt,
Dipl.-Ing. paed. Günter Zweynert

Published by
Zentralstelle für Bildungswesen des Schwermaschinen- und Anlagenbaus
-7010 Leipzig, Barfussgässchen 12

on behalf of

Institut für berufliche Entwicklung
-1080 Berlin, Französische Strasse 47

III-6-15 878-81 Ag 689-38-81

1. General

Educational material for courses on metallography divides naturally into the following subjects: Fundamentals of general metallography; ferrous materials; nonferrous materials and their alloys; materials testing; corrosion and corrosion prevention.

This series of projection films can be used for the theoretical and practical education and training in metal fabrication. It can also be used for further and refresher training in the metal-fabricating field.

To aid instructors in preparations for lessons and avoid misinterpretation of the contents of projection films, all of the films are accompanied by detailed explanations. Ease of comprehensibility called for the liberal use of colors in the design of projection films on methodological principles.

All crystallographic relationships (lattices, unit cells, structural faults, etc.) were marked in blue, whereas transitions to higher temperatures accompanied by state changes were marked in red.

Cooling curves of thermal analysis and heating curves of thermal treatment were plotted against a blue background, whereas constitutional diagrams and those relating to strength properties were plotted against yellow and green backgrounds, respectively.

Projection films nos. 5 and 9 are photomicrographs taped in their respective fields with the use of Prena adhesive tape.

To enable instructors to plot their own diagrams, films nos. 18, 19, and 20 were provided with cm grids.

The films and booklet are contained in plastic folders.

This series of projection films is supplied complete with a frame to take up films.

2. List of projection films

Film no.	Film title
1	Classification of steels
2	Properties of unalloyed steels
3	Austenite - Pearlite
4	Martensite
5	Structure in hardened steel
6	Stress-relief heat treatment
7	Normalizing heat treatment
8	Soft annealing heat treatment
9	Change in structure
10	Hardening
11	Procedure of hardening
12	Surface hardening
13	Hardness survey
14	Hardening and tempering diagram
15	Weld
16	Selection of high-alloy steels
17	Readily castable ferrous materials
18	Film with cm grid
19	Film with cm grid
20	Film with cm grid

3. Explanations of projection films

Film no. 1

Classification of steels

This film serves to explain the properties of heat-treated, case-hardening, and tool steels. Instructors should describe the relationship between the properties of steels and the iron-carbon diagram and discuss the dependence of grades of steel upon carbon contents and structural constitutions. Also, it is recommended to make additional use of films nos. 21 (iron-carbon diagram no. 1), 22 (iron-carbon diagram no. 2), and 23 (steel corner) of the series of projection films on fundamentals of general metallography, in order to take the element of formality from the classification of steels.

Film no. 2

Properties of unalloyed steels

The tensile strength, yield strength, elongation, and reduction of area are given in a diagram as a function of the carbon content. Also shown are schematic micrographs of steels having different carbon contents. Since steels whose carbon content is less than 0.8 percent show mixtures of ferrite and pearlite (with different proportions of these structural constituents), there can be noted a relation between structural composition and steel working and fabricating behavior.

For example, the ultimate tensile stress increases as the proportion of pearlite increases.

It is essential to discuss changes in steel properties due to heat treatment. In the diagram, this dependence is expressed by indicating the as-hardened tensile strength.

Be sure to include the said films nos. 21 and 23 in the discussion of film no. 2 showing the properties of unalloyed steels.

Film no. 3

Austenite - Pearlite

This film shows the schema of austenite-pearlite transformation and micrographic representations of pearlite, sorbite,

and troostite drawn from electron micrographs. The effect of the rate of cooling upon the austenite-pearlite transformation can be explained in connection with the said film no. 23 (steel corner).
Characteristic features include the diffusion of carbon from austenite to secondary cementite and the self-diffusion of iron atoms during transformation of face-centered cubic unit cells into body-centered cubic unit cells.
After having explained the mechanism of transformation (with the lower part of the film being covered), the individual structures corresponding to the different rates of cooling can be dealt with one by one. For this, it is necessary to consider the scale of 20,000 : 1 (electron microscope).
The term sorbite (finely lamellar pearlite whose structure is still within the limits of resolution of the optical microscope) should be used only to describe that structure which is formed on cooling from the austenite region. The same comments hold true with regard to the term troostite (extremely finely lamellar pearlite).
Such terms as tempering sorbite, osmondite, quenching sorbite, tempering troostite, and quenching troostite should no longer be used as they are now obsolete.

Film no. 4

Martensite

Rapid supercooling results in gamma-iron solid solutions being transformed into alpha-iron solid solutions by what is known as lattice flip-over. Rapid cooling provides against processes of diffusion taking place. Carbon will remain imbedded in the alpha-iron solid solution. There is formed a tetragonally distorted unit cell of extreme hardness.
This film shows Bain's principle of transformation. The possible location of carbon atoms is drawn in red and hatched. The film can be partially covered as shown in the sketch.

Film no. 5

Structure in hardened steel

To show structures in hardened steels, use is made of micrographs (x 500) of martensite and martensite containing residual austenite (etched using 3 % alcoholic nitric acid). Residual austenite is formed when steel having more than 0.6 % of carbon is cooled from excessive temperatures or at too rapid a rate. If residual austenite is present, then the desired hardness will not be obtained.

Film no. 6

Stress-relief heat treatment

This film shows the steel corner of the iron-carbon diagram with annealing field, the time-temperature curve, and a definition of the annealing process. It is used in connection with a discussion of stress-relief annealing. It is essential to again refer to the location and significance of line A_{c1}. Be sure to discuss the subject step by step; for this, it is necessary to partially cover the film.

Film no. 7

Normalizing heat treatment

Normalizing is used to refine the coarse and irregular structures of castings, forgings, and rolled pieces. Using this film, it is possible to determine the annealing temperatures required for different grades of steel. In the diagram, the annealing field is drawn in red and hatched. When plotting a temperature-time curve it is necessary to consider that higher normalizing temperatures are required for lower-carbon steels. It is for this reason that the process of annealing is marked, in this diagram, by a series of dashes.

A definition of the annealing process is given in the lower half of this film.

The subject of normalizing heat treatment should be discussed in steps and in connection with film no. 9 showing structural changes.
It is essential to again refer to the location and significance of lines A_{c1} and A_{c3}, respectively.

Film no. 8

Soft annealing heat treatment

Soft annealing provides for a major improvement of both machinability and cold-formability inasmuch as cementite tends to take on the smallest surface for a given volume (granular cementite). Using film no. 8 in connection with film no. 9 showing structural changes, it is possible to discuss the steel corner of the iron-carbon diagram with annealing field, plot a temperature-time curve of soft annealing as a function of the carbon contents of steels, and work out a definition of soft annealing heat treatment.

Film no. 9

Change in structure

This film is used in connection with films nos. 7 and 8 showing normalizing and soft annealing heat treatment, respectively.

This film shows the

- as-cast structure of cast steel prior to normalizing heat treatment (x 50), with ferrite and pearlite being shown in a Widmannstätten arrangement;
- as-normalized structure of cast steel (x 50);
- structure of C 100 W1 prior to soft annealing heat treatment (x 500); pearlite can be seen here, with cementite being arranged in lamellar form; and
- as-soft-annealed structure of C 100 W1 (x 500); globular cementite can be seen to be finely divided in ferrite.

All structures were etched using 3 % alcoholic nitric acid.

By partially covering the film being projected, it is possible to show individual micrographs and compare them with each other. It is essential to show students that the structural constitution of a material can be changed both intentionally and unintentionally. This allows instructors to discuss changes in material properties as a function of the structure of a material. Conversely, the structure of a cast material can be concluded from certain properties thereof.

Film no. 10

Hardening

This film can be used to discuss steel hardening problems. When explaining the steel corner of the iron-carbon diagram, with the line of hardening temperatures being dotted red, it should be pointed out that sub-pearlitic steels have to be heated as far as the austenite region. In the case of super-pearlitic steels, however, quenching from the

region extending up to A_{c1} will be sufficient.
Higher hardening temperatures would not only result in the formation of residual austenite but involve a major risk of cracking as well.
Film no. 10 also shows the temperature-time diagram in addition to giving a definition of hardening.

Film no. 11

Procedure of hardening

This film, together with film no. 10, is used to explain the individual procedural steps of hardening. Heating the work to high temperatures is followed by rapid quenching to harden the structure. Re-tempering allows higher quality properties to be obtained. This is illustrated by the temperature-time diagram of hardening.
In the steel corner of the iron-carbon diagram, the red dotted line shows the hardening temperatures and the fields for tempering treatments.
The dark-yellow field (ž) relates to low-temperature tempering, whereas the red fields (A and V) relate to medium-temperature and high-temperature tempering, respectively.
Combined hardening and high-temperature tempering is generally referred to as refining by heat treatment (V).
When discussing the contents of the film it is appropriate to take the proper treatment temperatures from the relevant standards and work out a technology for a particular work. The iron-carbon diagram is here serving as a clue only, in order to explain the effect of heat treatment and the transformations effected.

Film no. 12

Surface hardening

This film is used to illustrate the purpose of superficial hardening and provides useful information about parameters of individual hardening methods.

The upper representation shows a hardened shaft. The hardness traverse across the diameter is shown on the left of the cross section.
Surface and case hardening are based on martensite formation. When discussing the contents of this film it is essential to point out that in surface hardening the carbon content required for martensite formation is already contained in the steels and the surface hardness is obtained by local heating. With case hardening, on the other hand, the minimum carbon content is achieved through diffusion into the surface.
In the case of nitriding, strength-improving elements are nitrogen compounds such as iron, chromium, aluminum, and vanadium nitrides. The hardness of nitrides exceeds that of the martensite. The extremely hard and wear-resisting surface is, however, very thin.

Film no. 13

Hardness survey

This film includes a diagram showing the thickness of the hardened surface layer obtained using the individual methods of hardening. When discussing the contents of this film it is necessary to point out differences in hardness level as a function of the hardening procedure and distance from the surface. In the upper part of the film, black fields indicate the depths of hardened layers (which can be obtained in general hardening), while the vertical lines indicate the maximum values.
Films nos. 12 and 13 should be dealt with together, since different steels and methods are used for hardening. The green region in the diagram applies to both case and flame surface hardening.

Film no. 14

Hardening and tempering diagram

Quenching and subsequent tempering is a method of improving a steel's strength and impact or toughness properties. The quenching and tempering diagram in this film shows the tensile strength, the yield strength, the proof strength, and the impact strength of an alloy steel containing 0.28

percent of carbon, 2.5 percent of nickel, and 2.5 percent of chromium.

The tempering temperatures required to achieve certain quality properties can be taken from the quenching and tempering diagram. For example, if the material containing 0.28 percent of carbon, 2.5 percent of nickel, and 2.5 percent of chromium is required to have a strength in the range of from 100 to 120 kgf/mm^2, then it is necessary that a tempering temperature of about 500°C be chosen.

Be sure to discuss film no. 14 in connection with film no. 1 that is concerned with the classification of steels.

Film no. 15

Weld

For a graphic depiction of theoretical relationships, the buildup of a weld was included in this series of films as a practical example. Certain regions of the schematic cross section are used and related to parts of the iron-carbon diagram. The structure and hardness of a material can be inferred from micrographs.

The diagram showing the hardness traverse across the weld region need be discussed qualitatively only. The heat treating processes dealt with previously should be touched upon, too.

Film no. 16

Selection of high-alloy steels

This film presents a selection of high-alloy steels, allowing the alloying elements and the most important properties to be easily explained to students. In the case of high-alloy steels, the proportion of alloying elements usually exceeds the 5 percent limit. The alloy element content is included in the designations. Only the principal alloy elements and contents were marked in color, with green, lilac, and blue being used for chromium, manganese, and tungsten, respectively.

Film no. 17

Readily castable ferrous materials

The term castable ferrous materials is used to describe those ferrous materials of which the carbon content exceeds the limit of solubility in the gamma-iron solid solution. High-carbon ferrous materials have excellent casting characteristics. In this film, a distinction is made between cast steel, malleable pig iron, white cast iron, spheroidal graphite cast iron, and flake graphite cast iron. The structures and properties can be derived from micrographs.

Classification of cast ferrous materials

Structual scheme

It is important that students should be able to identify the names of particular cast materials with the special characteristics thereof. Aiding students in acquiring this ability are schematized micrographs of cast ferrous materials.

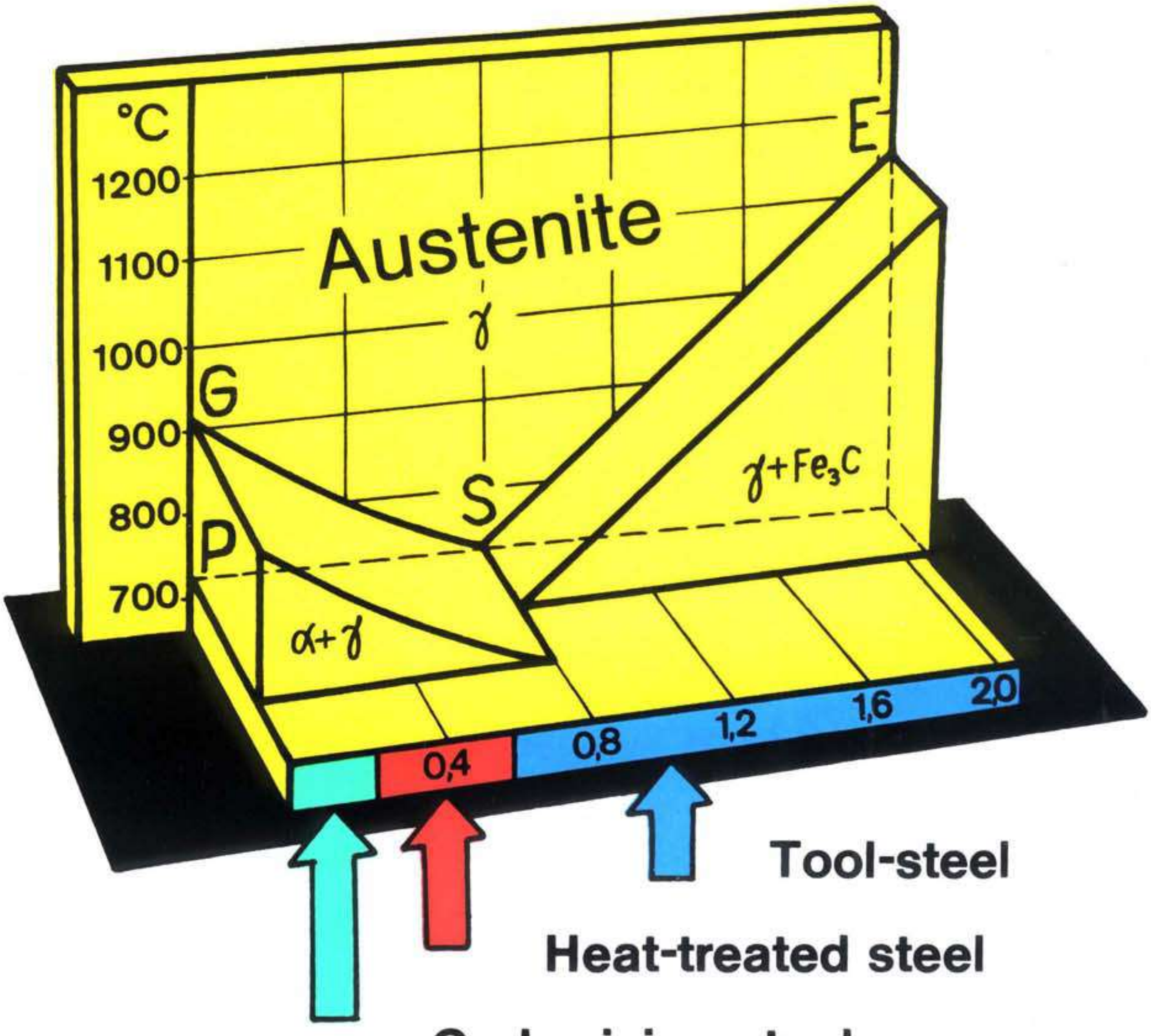

Classification of steels

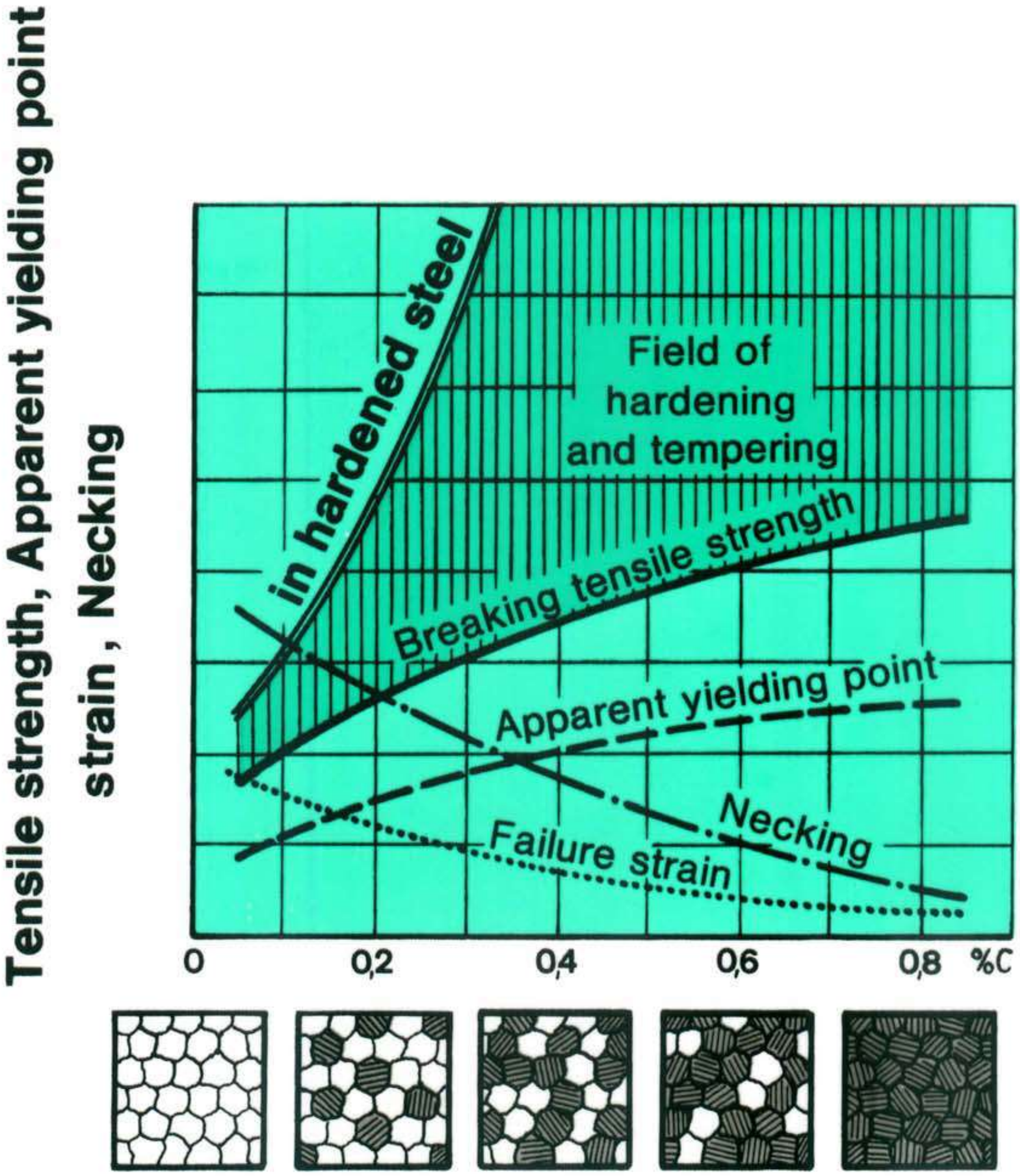

Properties of unalloyed steels

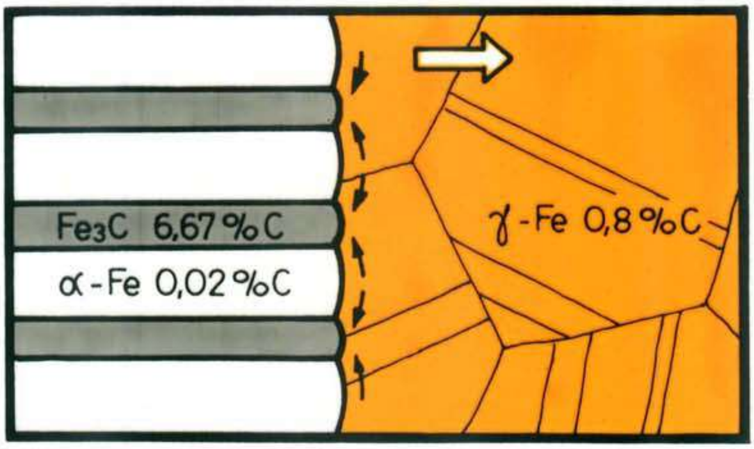

Pearlite, Quenching troostite, Troostite

20 000:1

Austenite - Pearlite

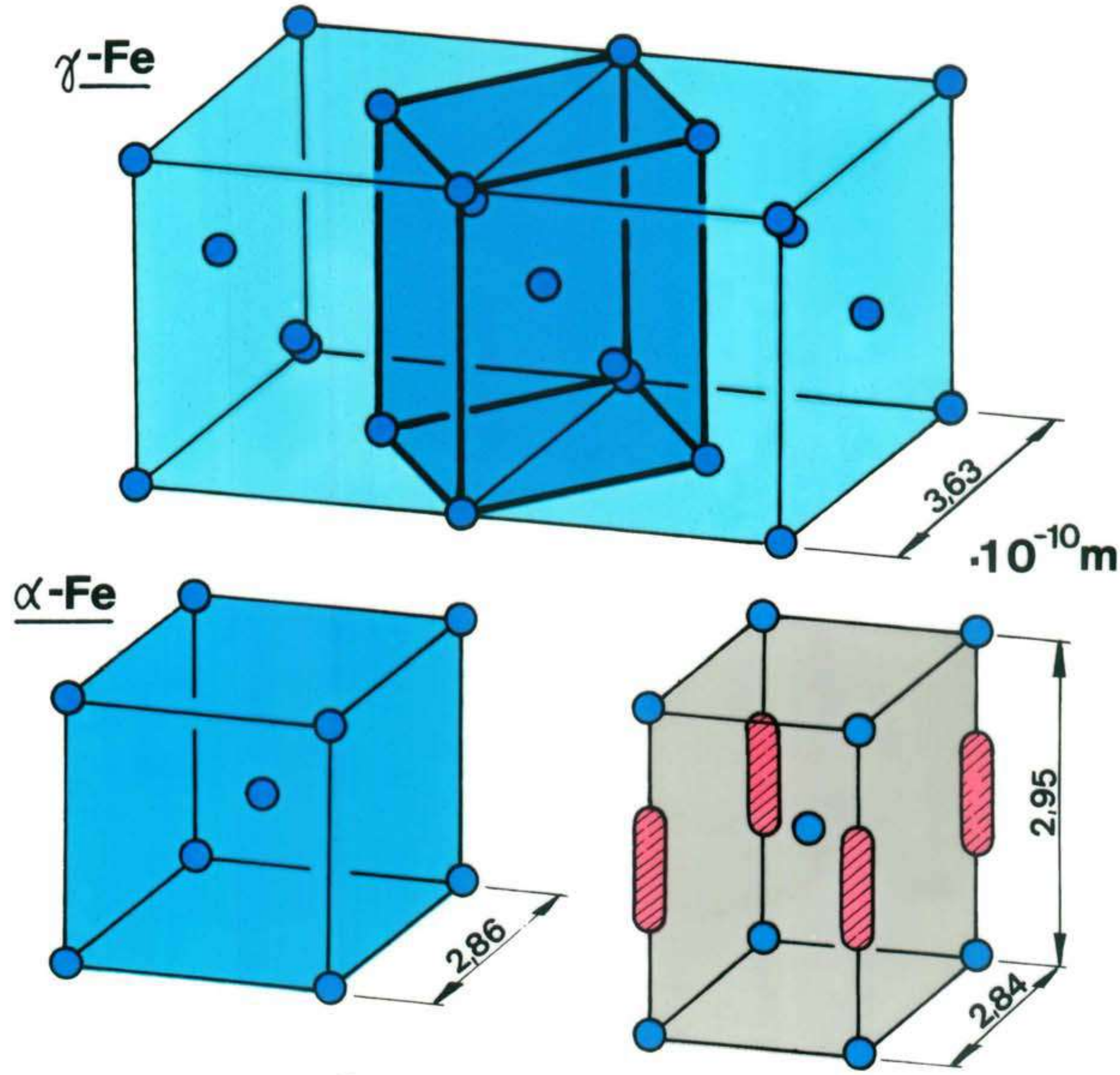

Martensite

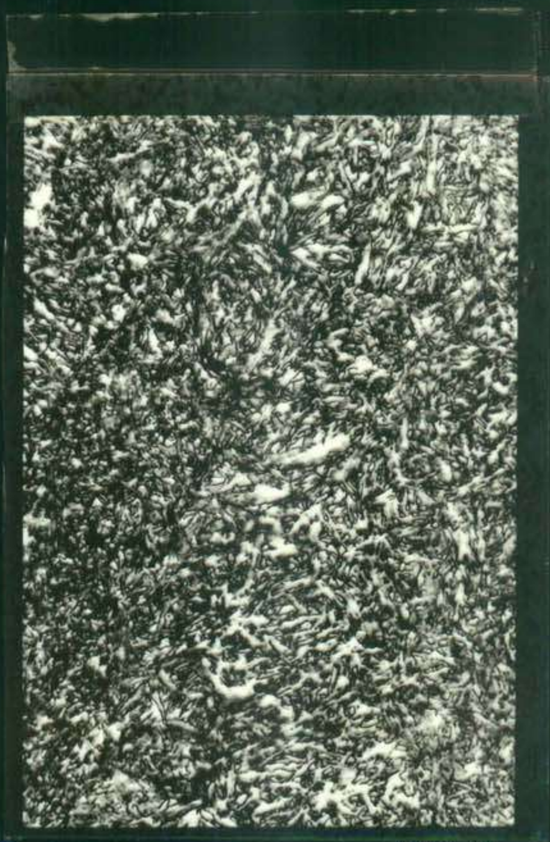

500:1

Martensite

500:1

Martensite
and residual austenite

Structure in hardened steel

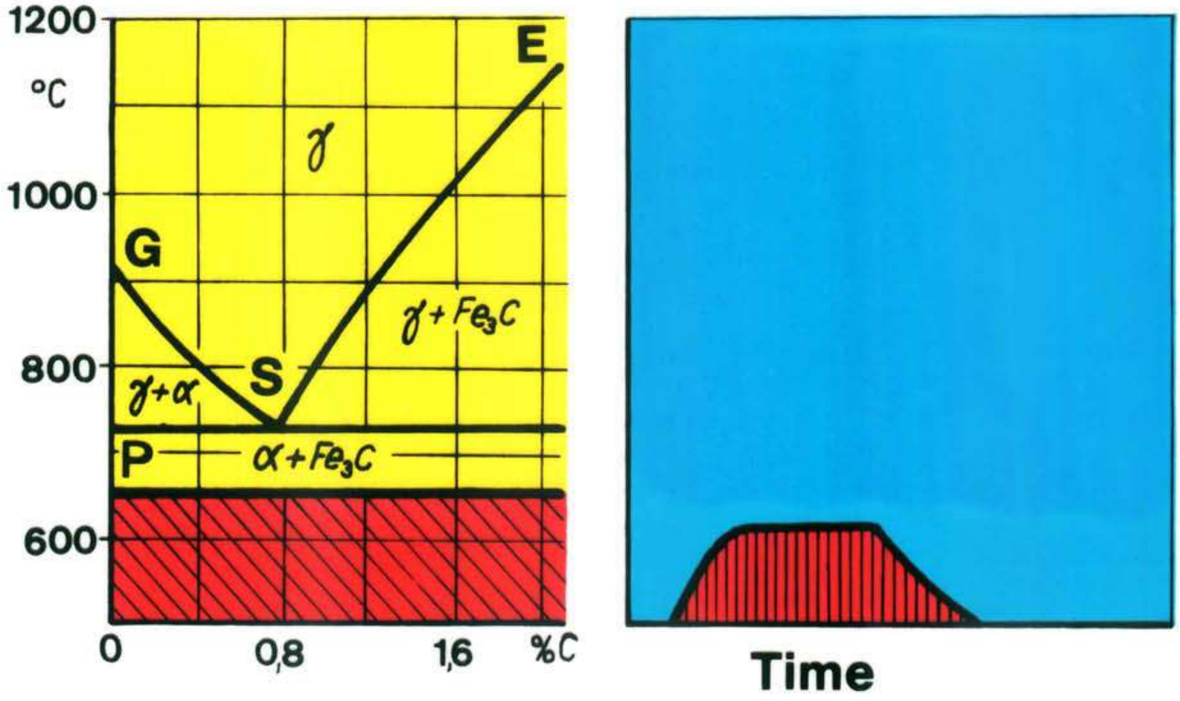

Annealing at a temperature below Ac_1 followed by slow cooling to decrease inner tension without changing the structural pattern.

Stress relief

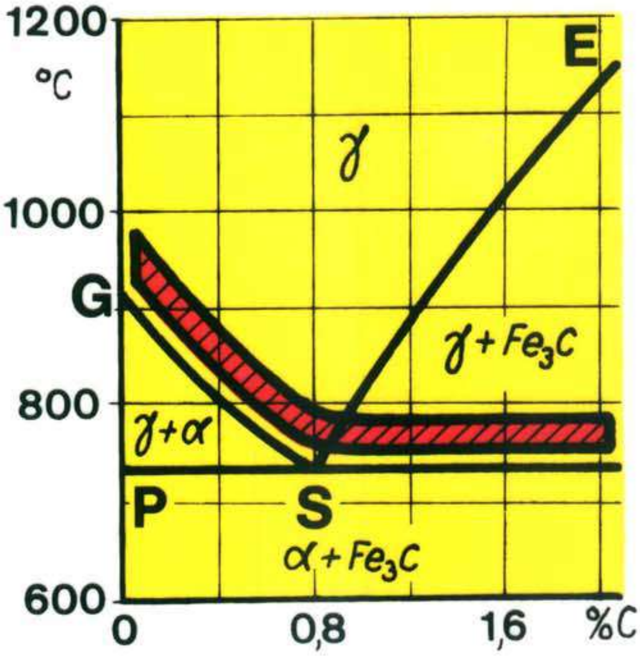

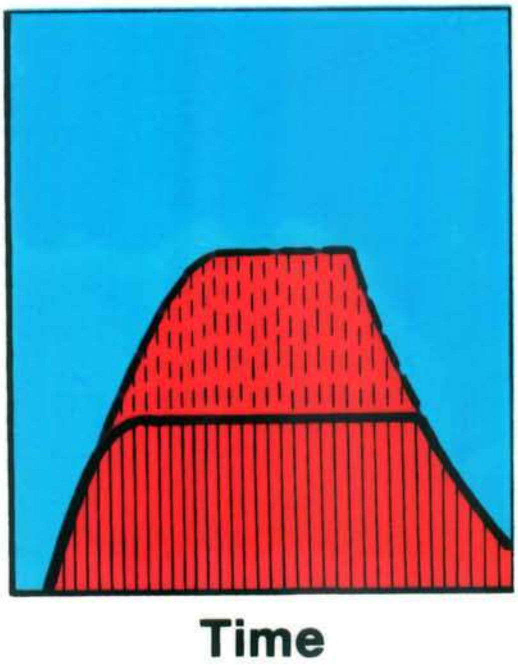

Annealing at a temperature above Ac_3 (above Ac_1 for hypereutectic steel) followed by slow cooling to distribute pressure evenly over the structural constituents

Normalizing

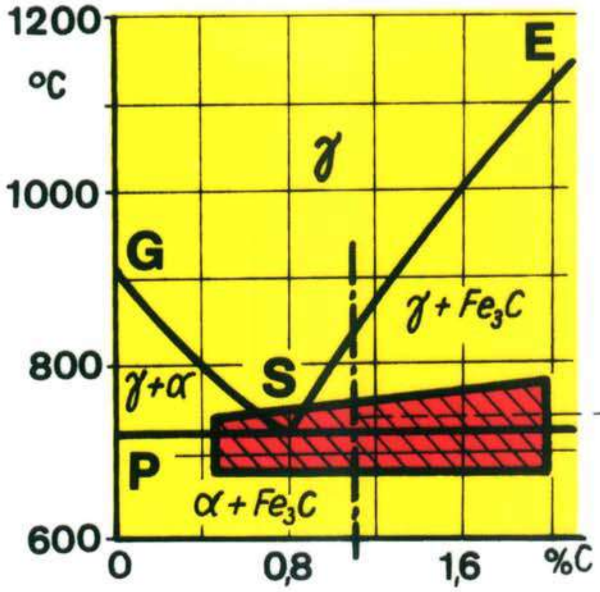

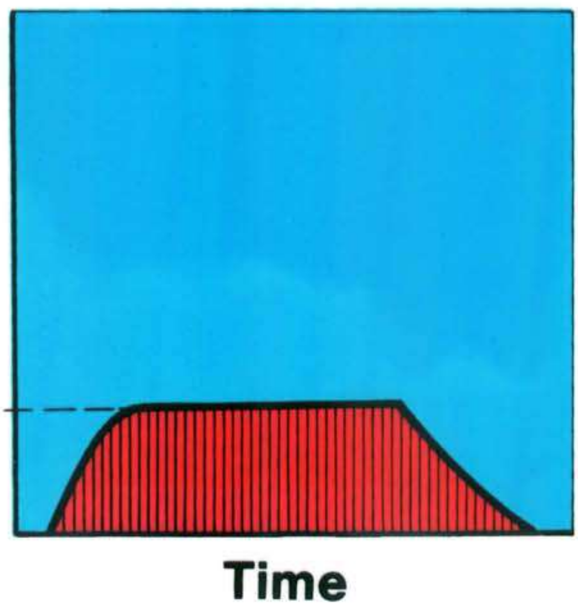

Annealing at a temperature just below or above Ac, followed by slow cooling to achieve mainly grained cementite

Soft-annealing

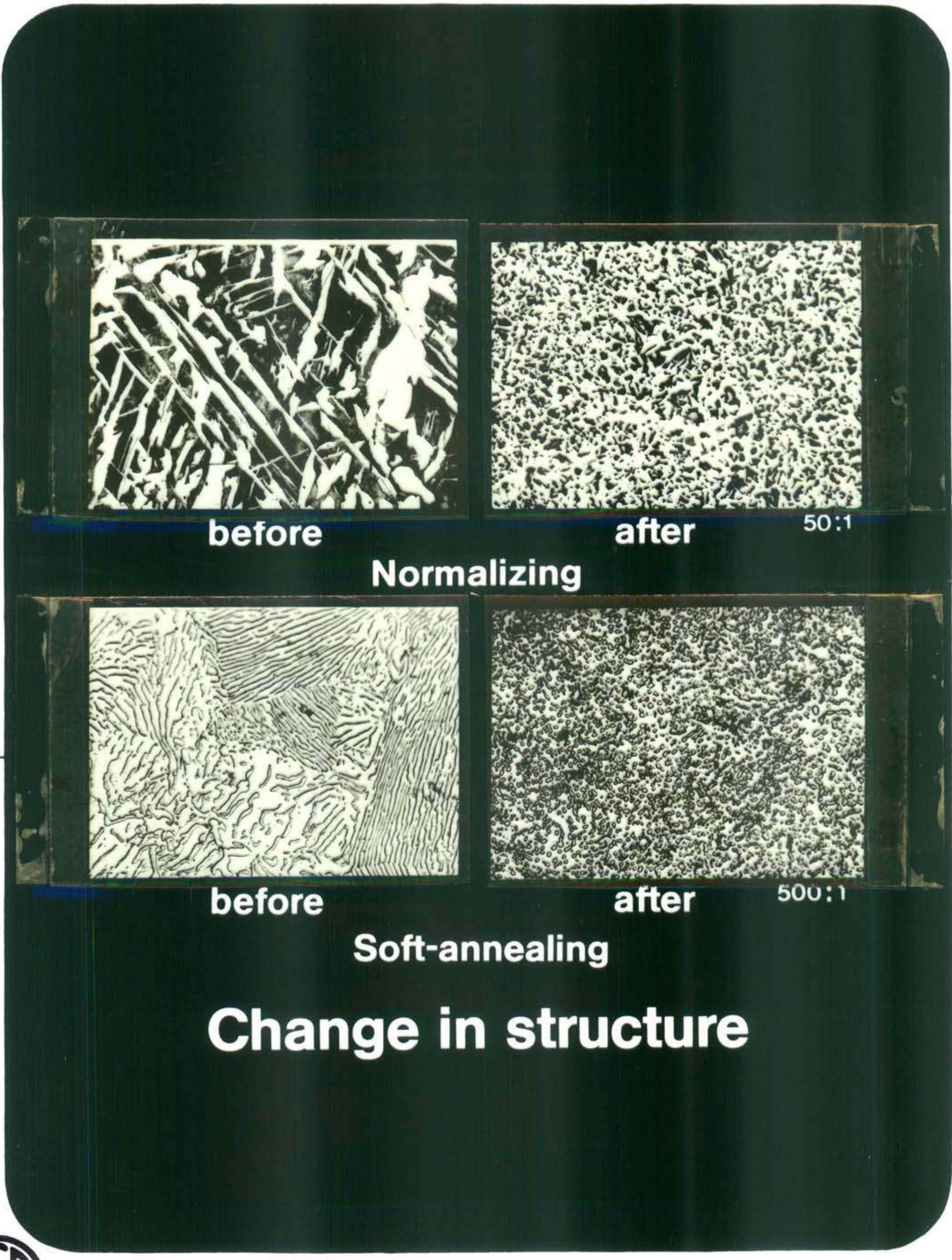
before
after
50:1
Normalizing
before
after
500:1
Soft-annealing
Change in structure

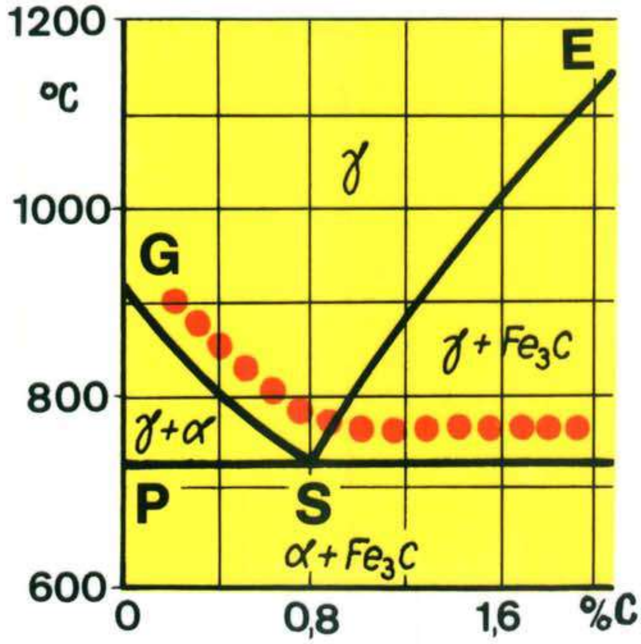

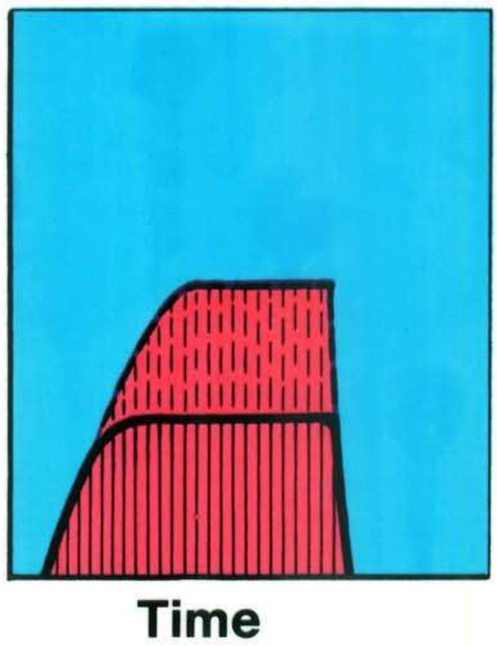

Heating thoroughly and at very high temperatures, the total volume or certain surface layers at hardening temperature; holding and subsequent cooling at such a speed that principally martensite results

Hardening

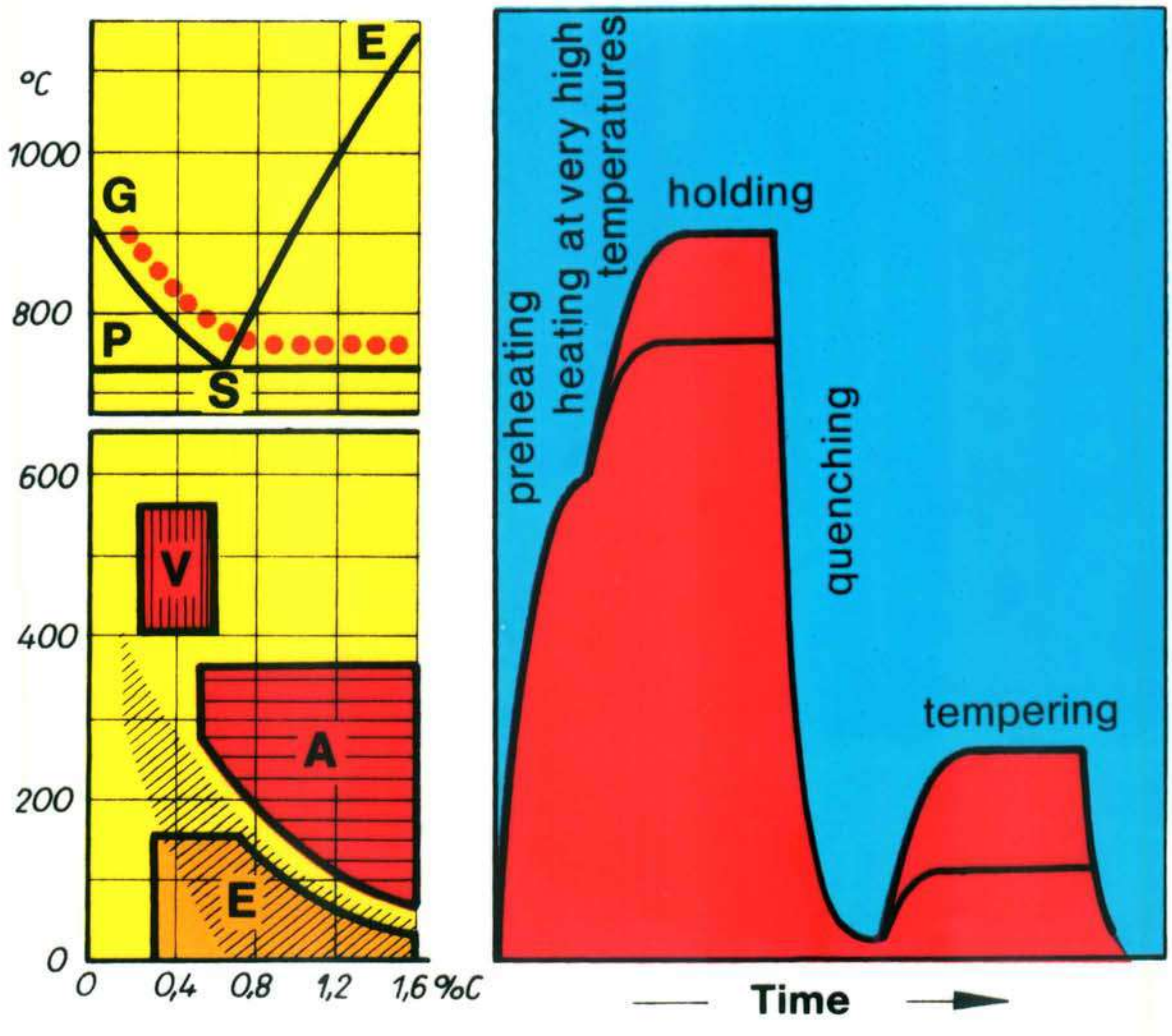

Hardening process

Purpose

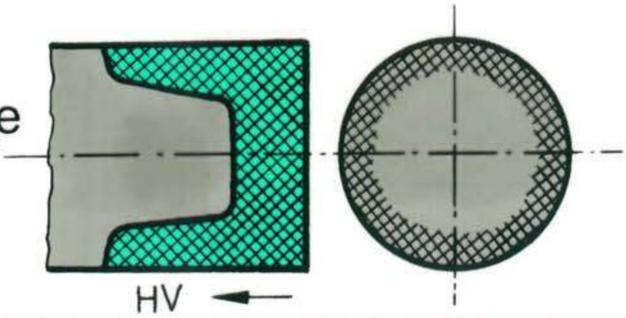

hard surface
soft, tough centre

Process	thermal	chemico-thermal	
	Hardening of surfaces	Case-hardening	Nitriding
	Induction Flame Hardening by Immersion	Diffusion of C and hardening	Diffusion of N
Steels	$> 0{,}25$ C	$< 0{,}25$ C	Cr-, Al-, V- alloys
Hardness	Martensite	Martensite	Nitrides
Temperature	$> A_1$ quench	$> A_1$ quench	500 °C arbitrary cooling

Hardening of surfaces

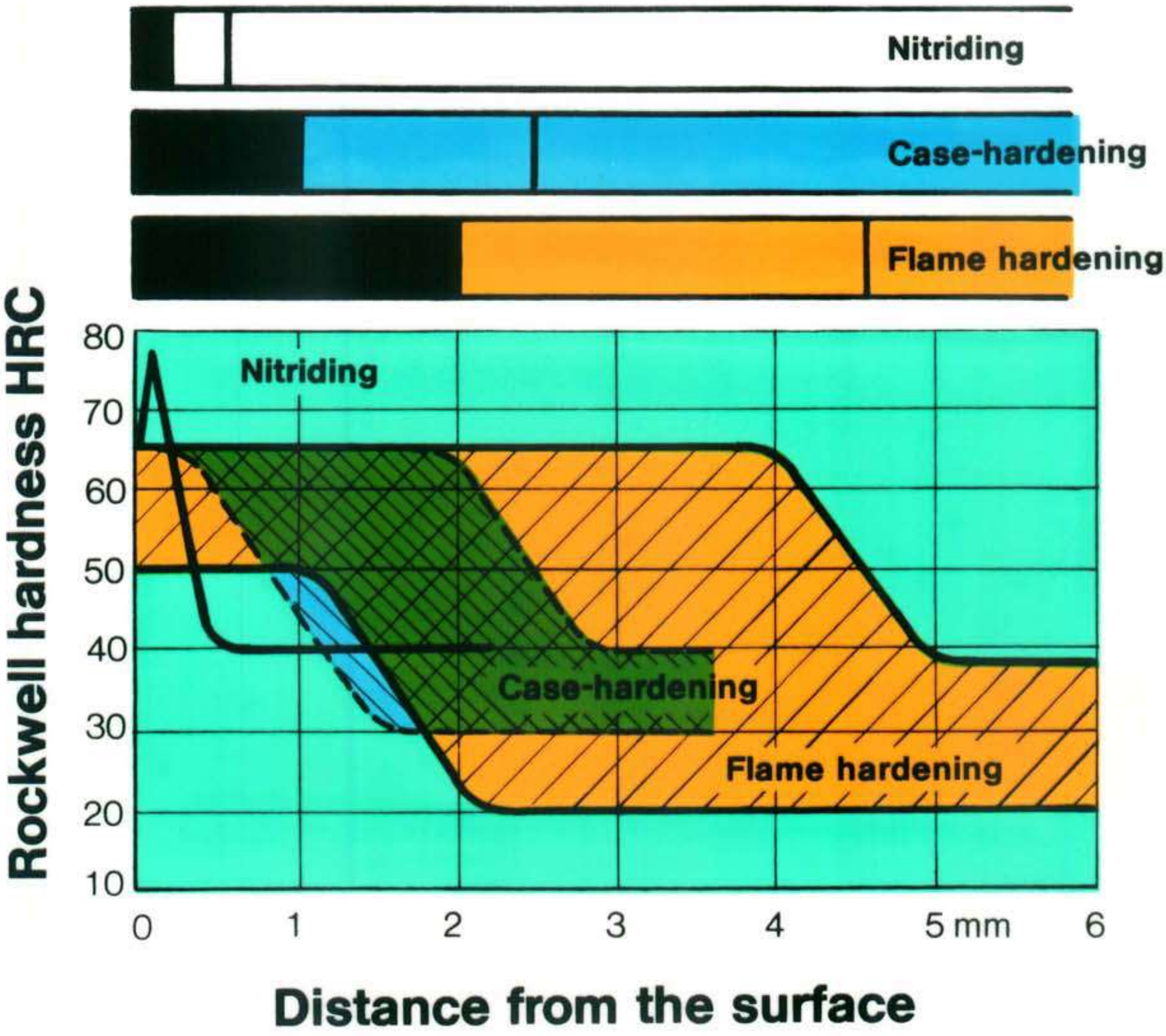

Hardness development

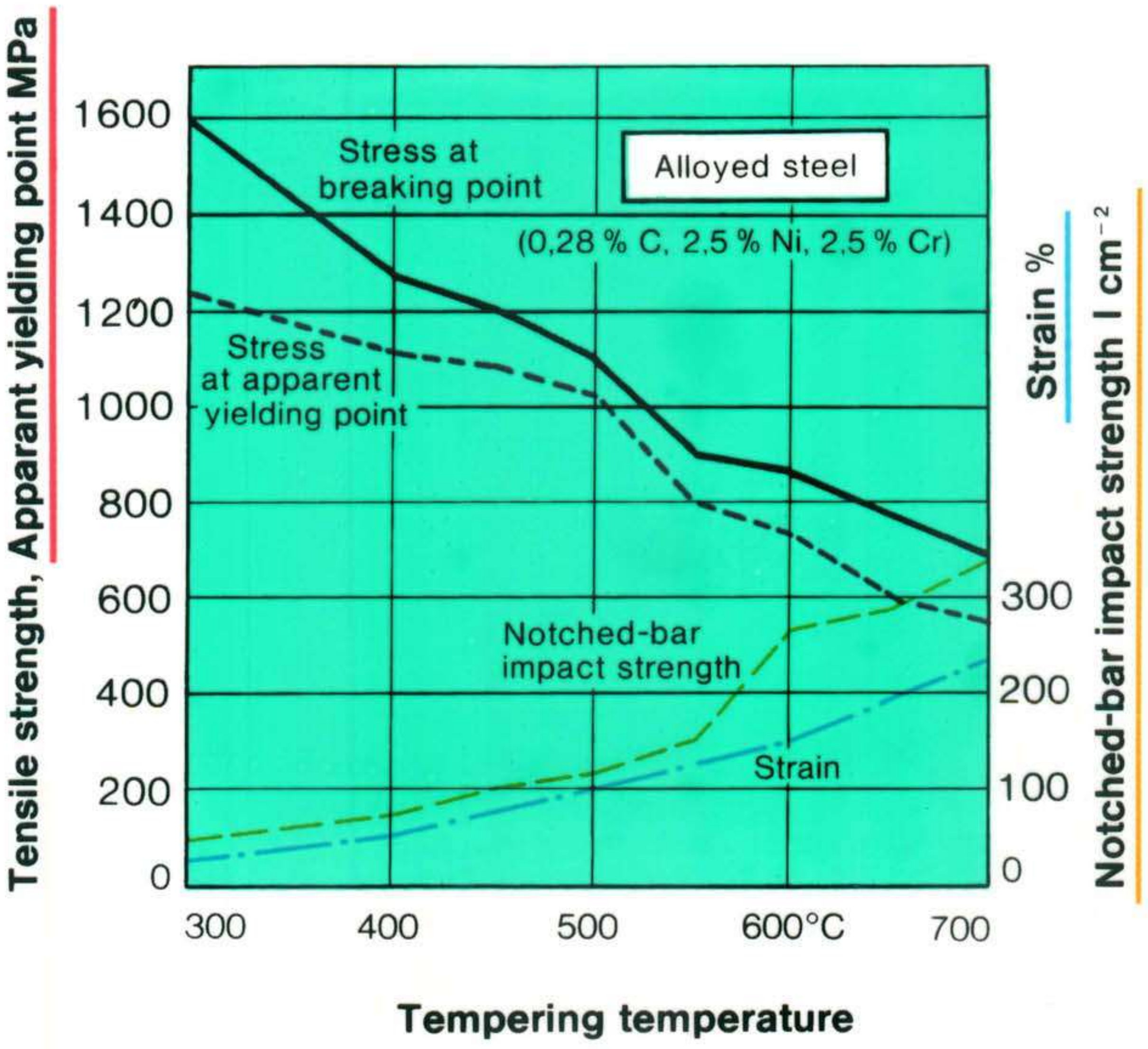

Heat-treatment diagram

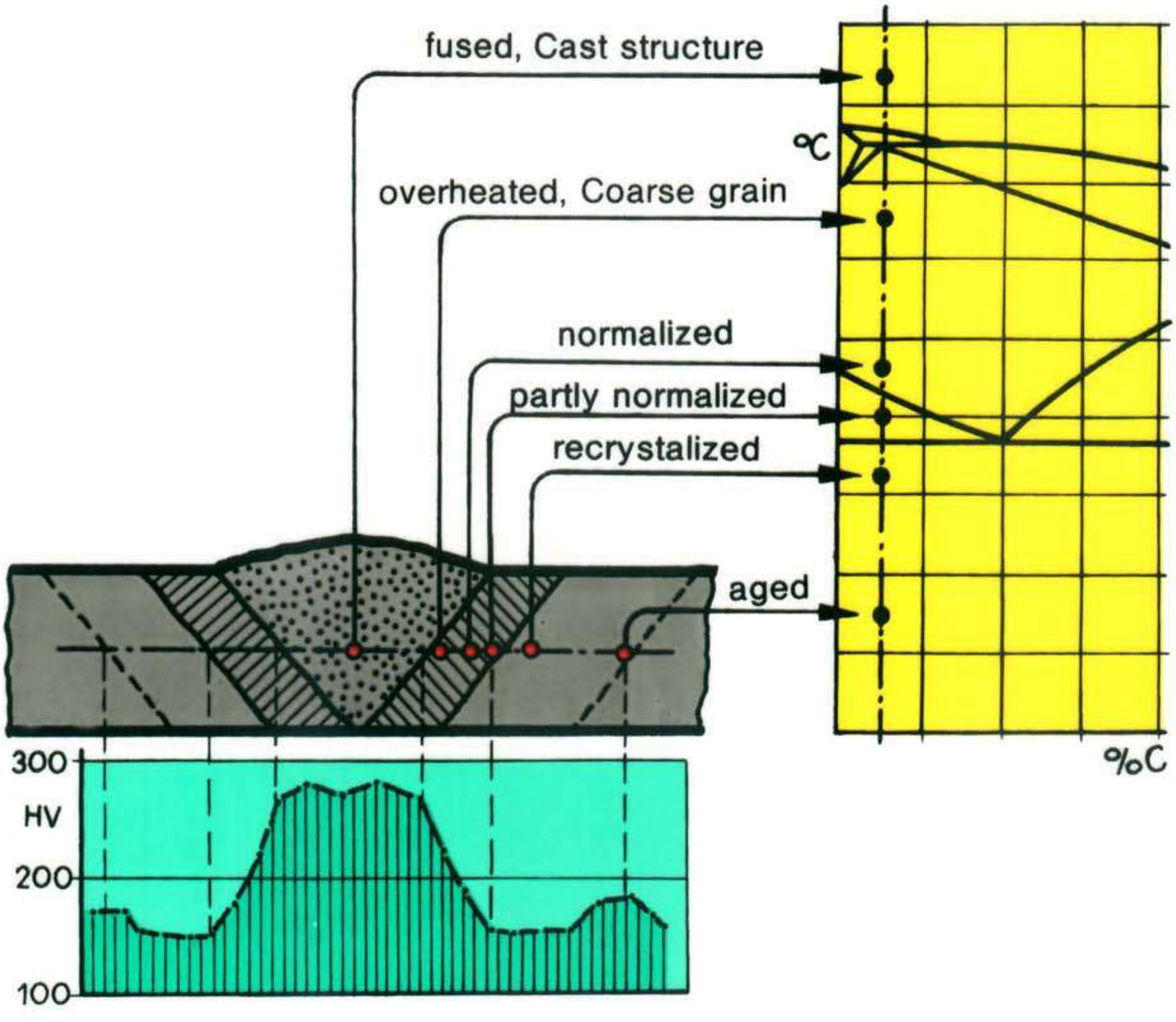

Welding seam

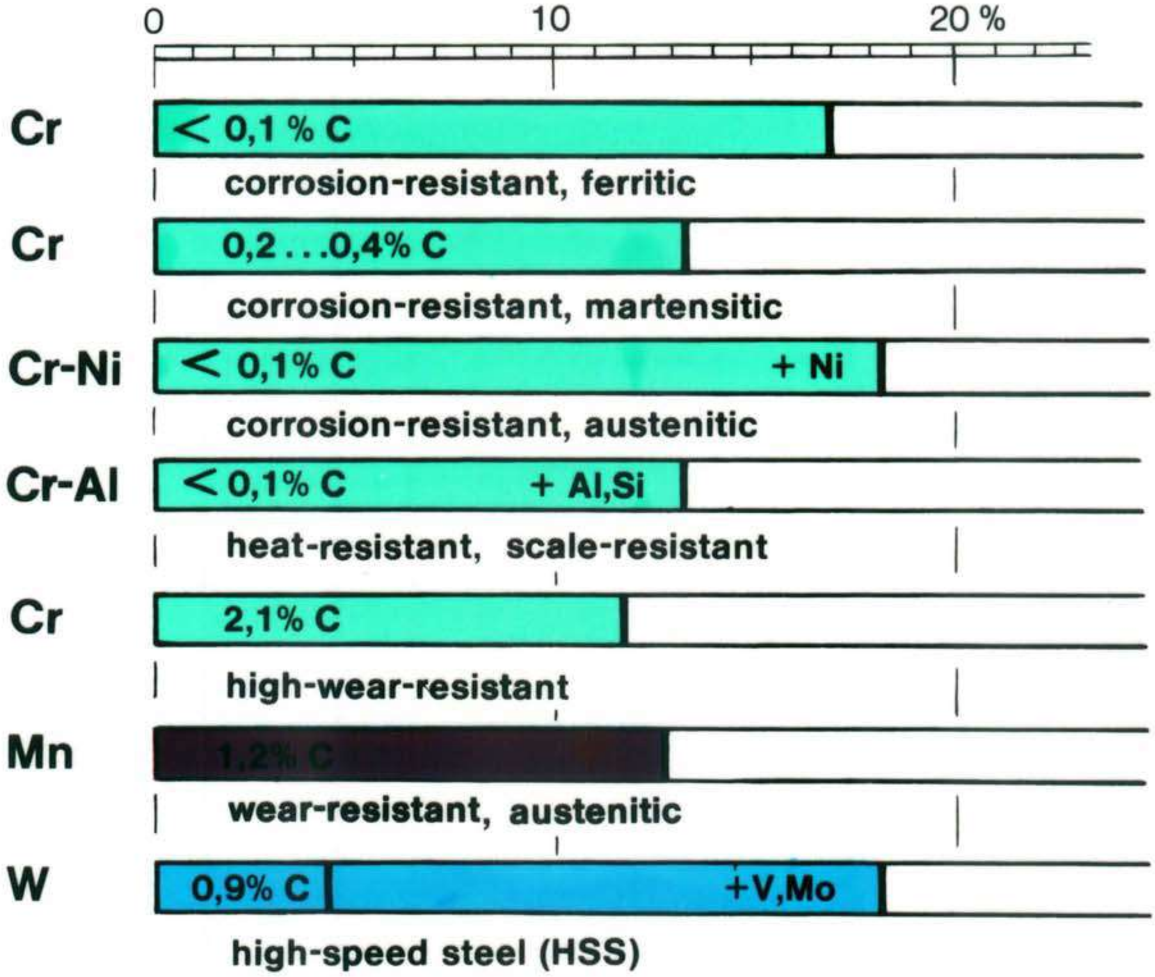

Number of high-alloy steels

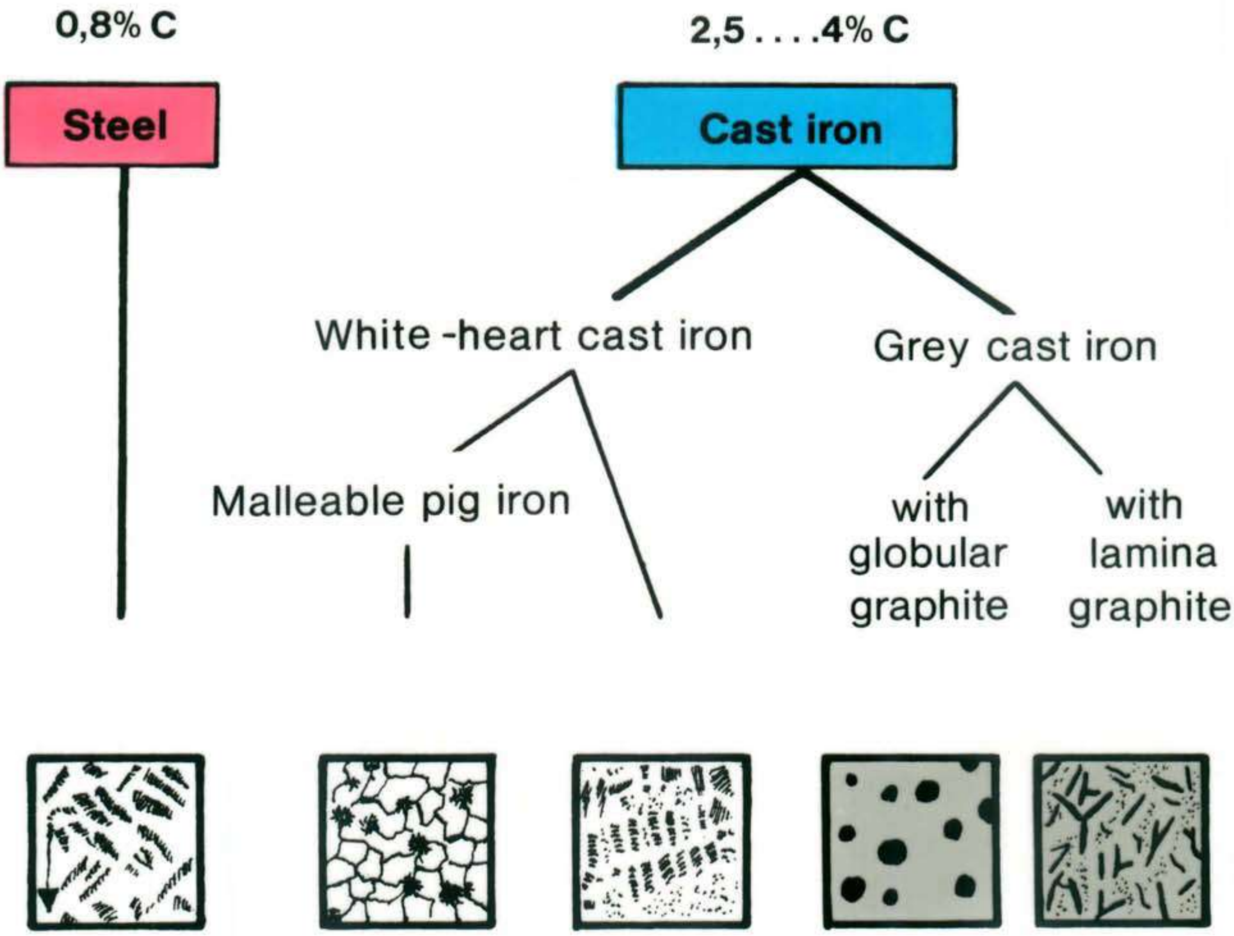

Iron casting material

ELECTRICIAN
1st YEAR
TRANSPARENCIES

CENTRAL INSTRUCTIONAL MEDIA INSTITUTE, CHENNAI

Directorate General of Employment and Training, Ministry of Labour, Govt. of India.

Developed by

CENTRAL INSTRUCTIONAL MEDIA INSTITUTE

P.O. Box 3142, CTI Campus, Guindy, Chennai - 600 032. Phone: 2233 4248, 2234 5257 Fax: (0091-44) 2234 2791

CENTRAL INSTRUCTIONAL MEDIA INSTITUTE, CHENNAI
INDO - GERMAN PROJECT

TR 04 01 01 01 98

ARTIFICIAL RESPIRATION - NELSON'S ARM-LIFT BACK-PRESSURE METHOD

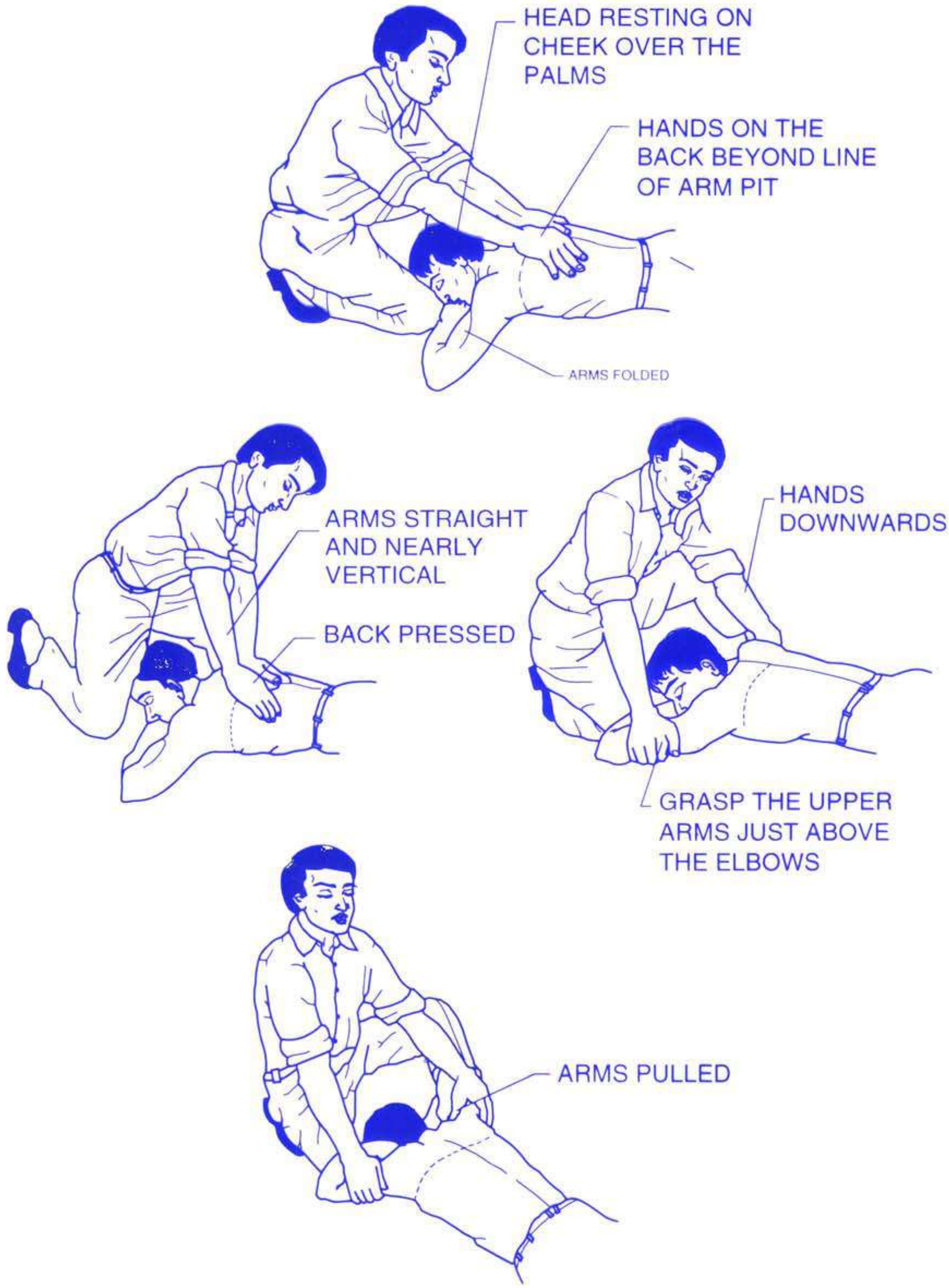

ARTIFICIAL RESPIRATION - SCAFFER'S METHOD

Lay the victim on his belly, one arm extended directly forward, the other arm bent at the elbow and with the face turned sideward and resting on the hand or forearm as shown.

Kneel astride the victim, so that his thighs are between your knees and with your fingers and thumbs positioned as shown

With the arms held straight, swing forward slowly so that the weight of your body is gradually brought to bear upon the lower ribs of the victim to force the air. out of the victim's lungs as shown

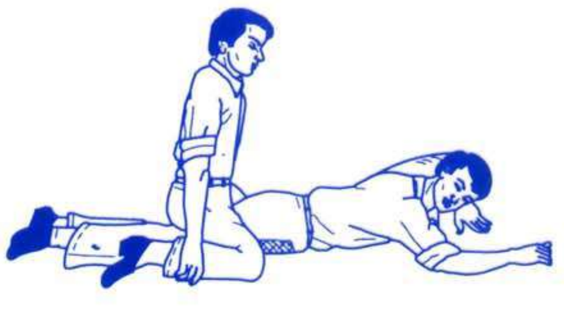

Now immediately swing backward removing all the pressure from the victim's body as shown and thereby allowing the lungs to fill with air

After two seconds, swing forward again and repeat the cycle twelve to fifteen times a minute

ARTIFICIAL RESPIRATION - SILVESTER'S METHOD

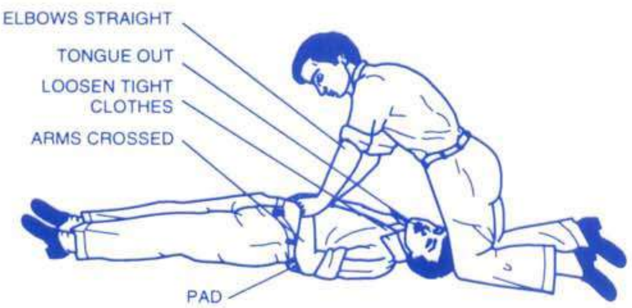

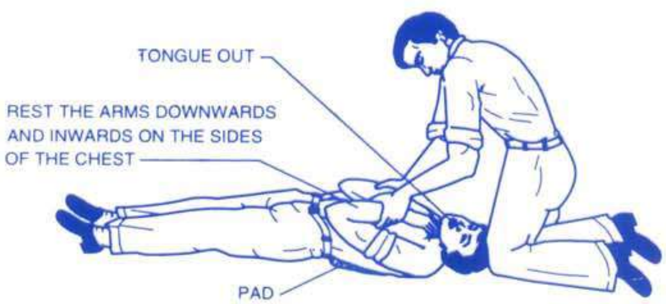

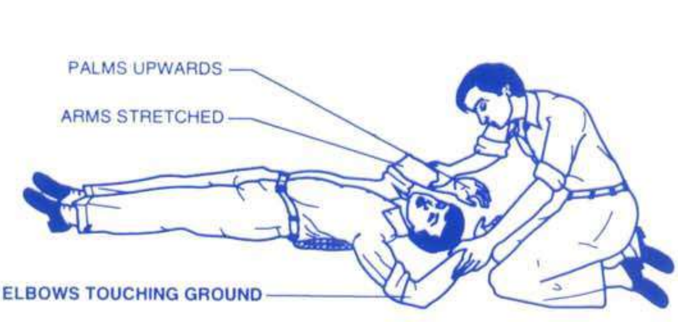

To be used if the victim cannot lie on his belly or chest due to injury.

- Lay he victim flat on his back and place a roll of clothing under his shoulders to ensure that his head is thrown well back.
- Wipe saliva out of his mouth: Pull the tongue forward and towards the chin and hold it in this position if there is an assistant if not, tie it with a strip of cloth, cross the strip under the chin, and tie below the neck to prevent the tongue from blocking the wind pipe.
- Kneel over the Victim's head and grasp his arms above the wrist as shown.
- Swing forward and press his arms steadily and firmly downwards and inwards against the sides of the chest to force the air out of the lungs as shown.
- Bring the victim's arms steadily first upward and then backwards until they are in line with the body and the elbows are almost touching the floor as shown, this allowing the lungs to fill the air.
- After three seconds, swing forward again and repeat the cycle. The complete cycle should take about six seconds.

CENTRAL INSTRUCTIONAL MEDIA INSTITUTE, CHENNAI
INDO - GERMAN PROJECT

TR 04 01 01 04 98

ARTIFICIAL RESPIRATION - MOUTH TO MOUTH METHOD

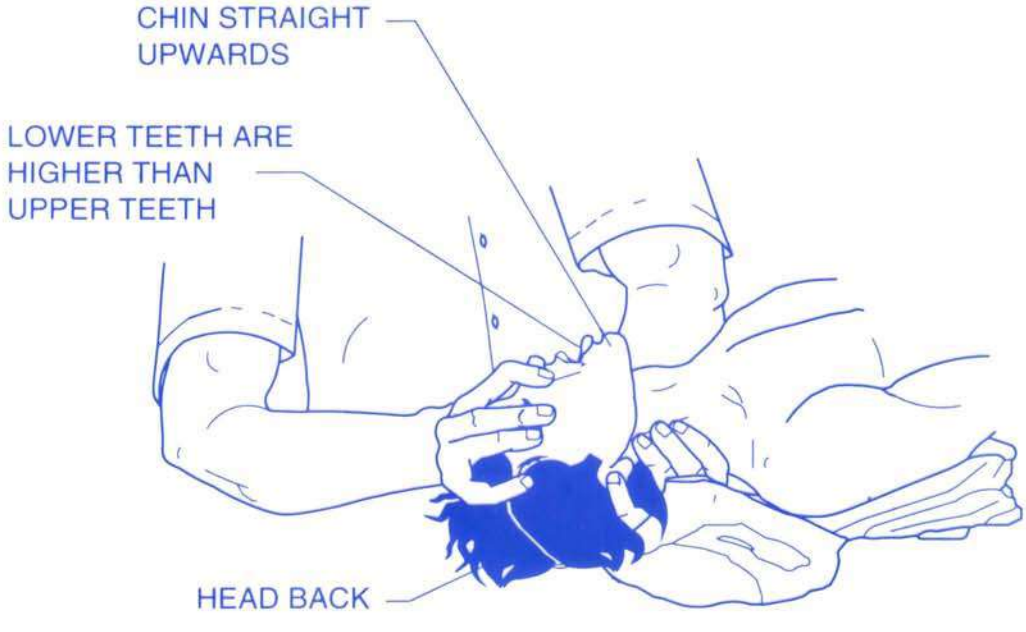

CIMI CENTRAL INSTRUCTIONAL MEDIA INSTITUTE, CHENNAI
INDO - GERMAN PROJECT

gtz

TR 04 03 01 01 98

PARTS OF A MOVING COIL INSTRUMENT

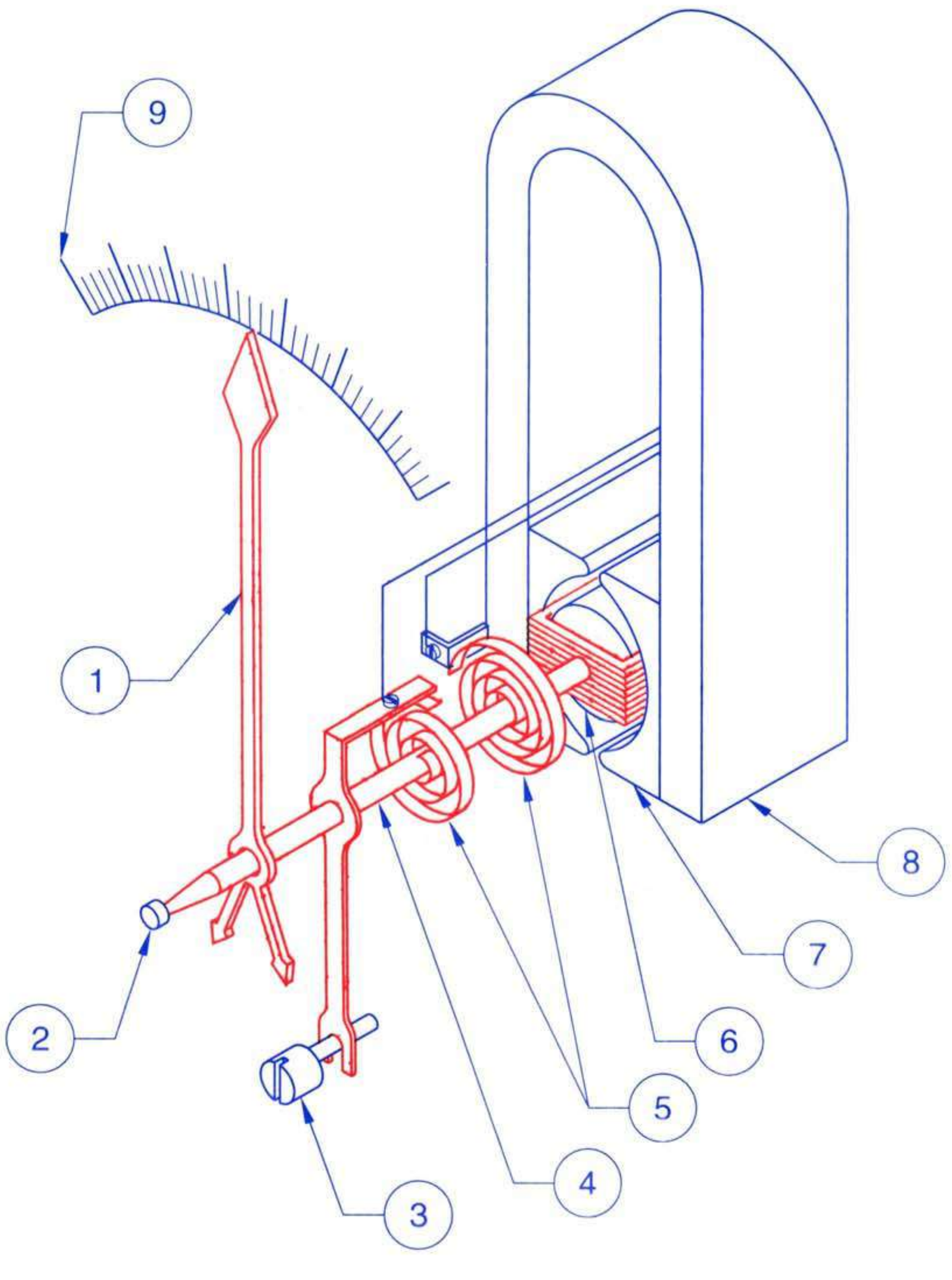

PARTS OF A MOVING IRON INSTRUMENT

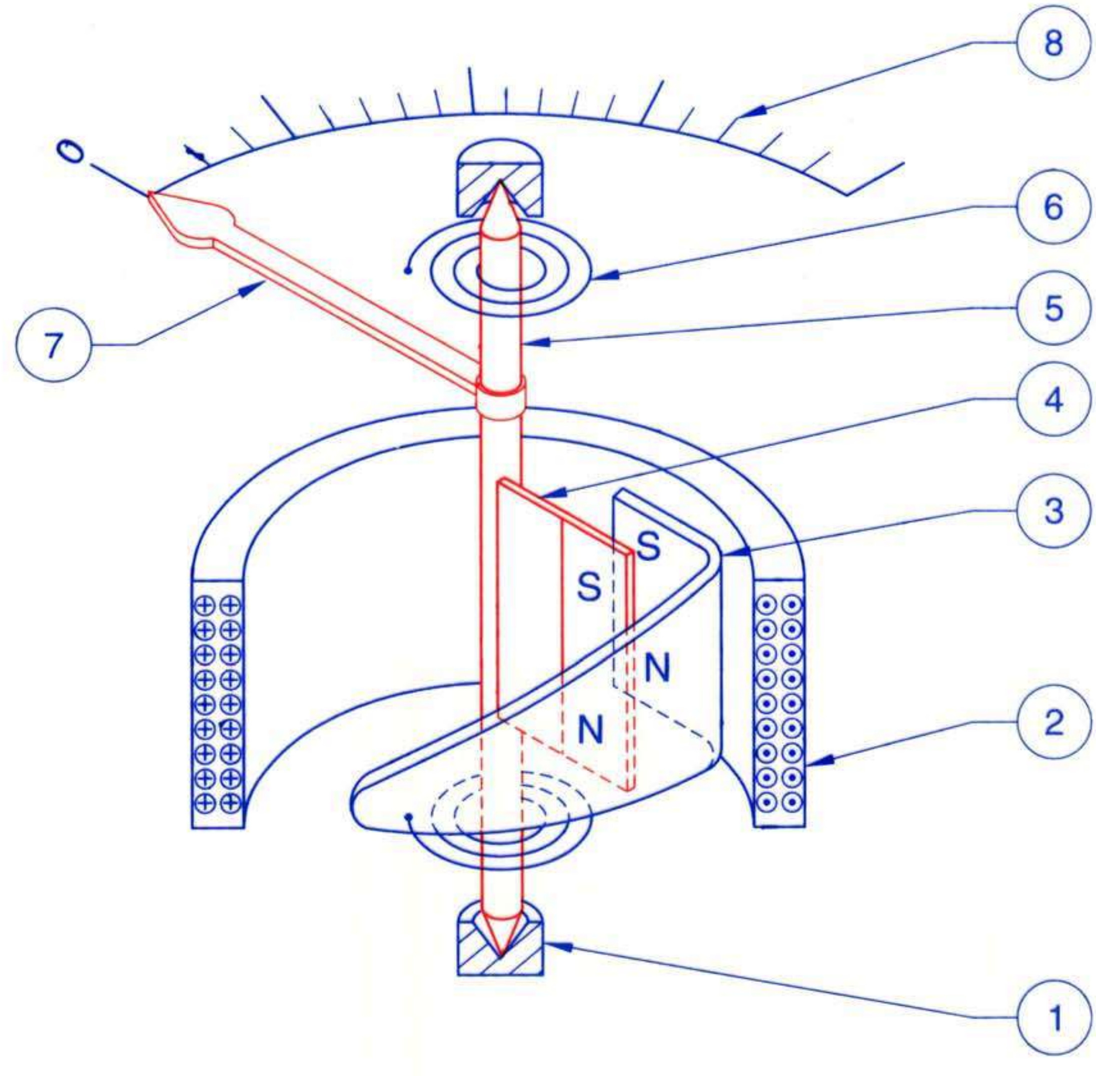

PARTS OF A D.C. MACHINE

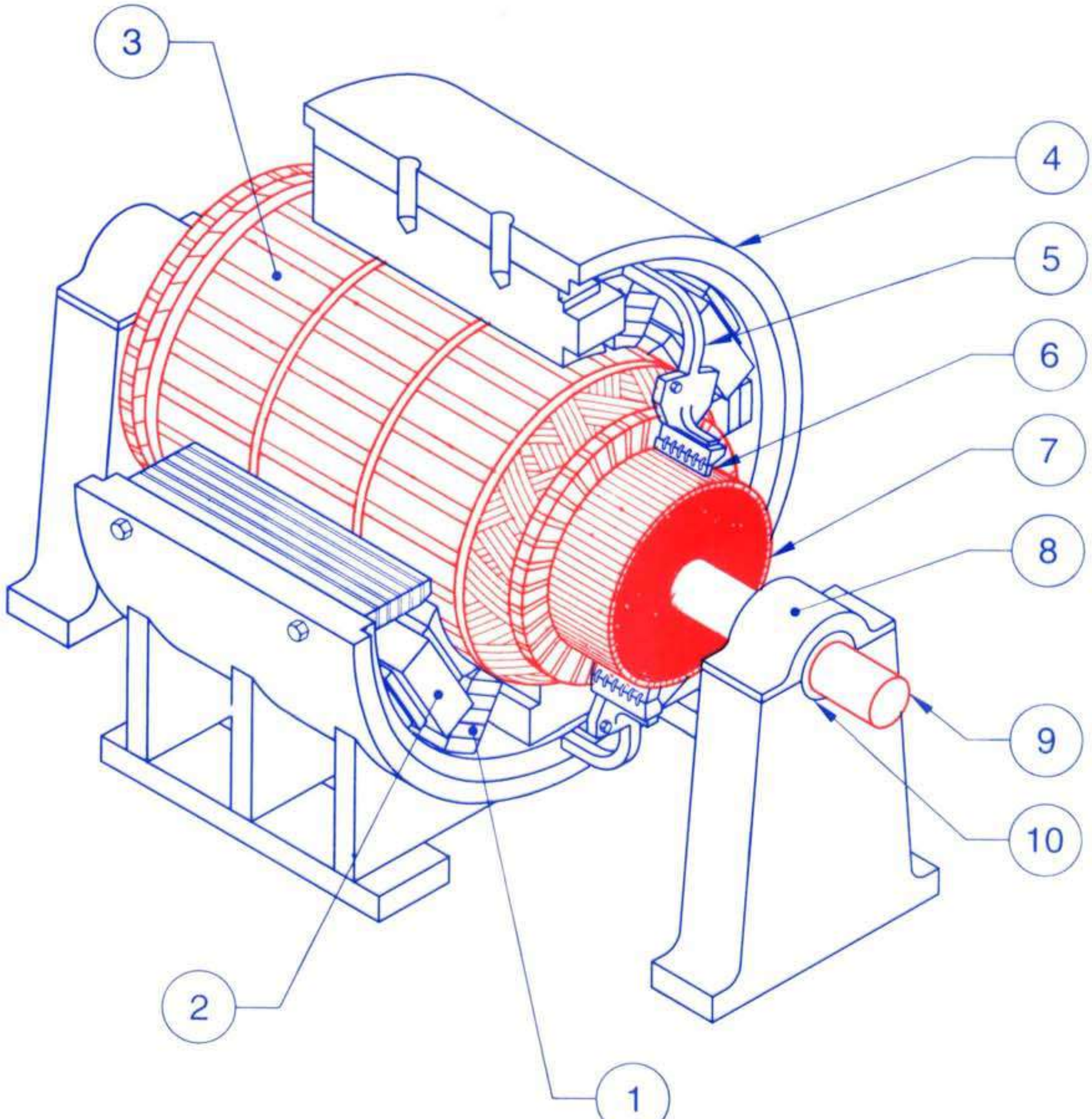

CIMI CENTRAL INSTRUCTIONAL MEDIA INSTITUTE, CHENNAI
INDO GERMAN PROJECT
gtz
TR 04 01 02 01 98

MULTIMETER - 1

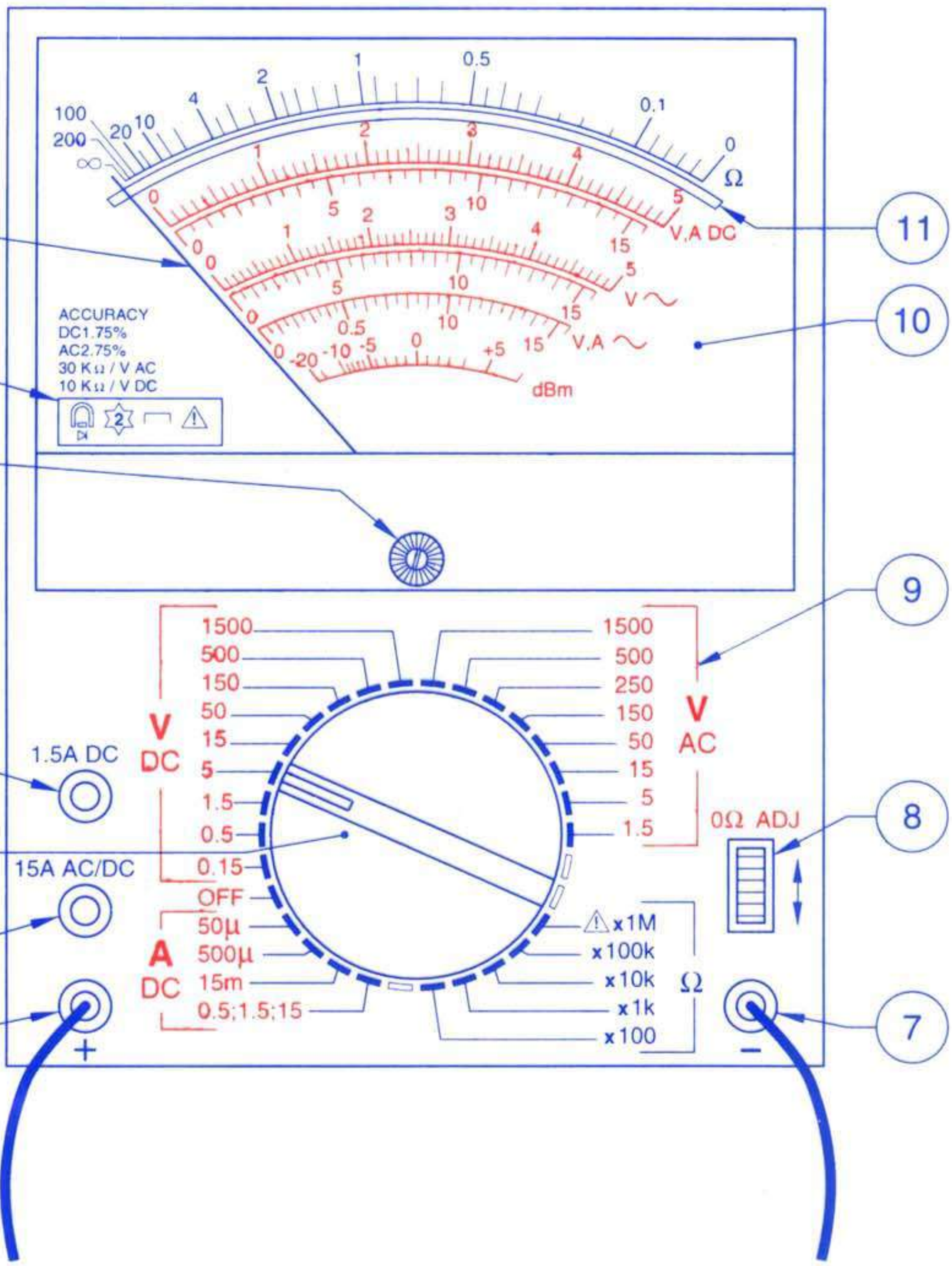

CENTRAL INSTRUCTIONAL MEDIA INSTITUTE, CHENNAI
INDO - GERMAN PROJECT

TR 04 01 02 02 98

MULTIMETER - 2 ZERO ADJUSTMENT

A

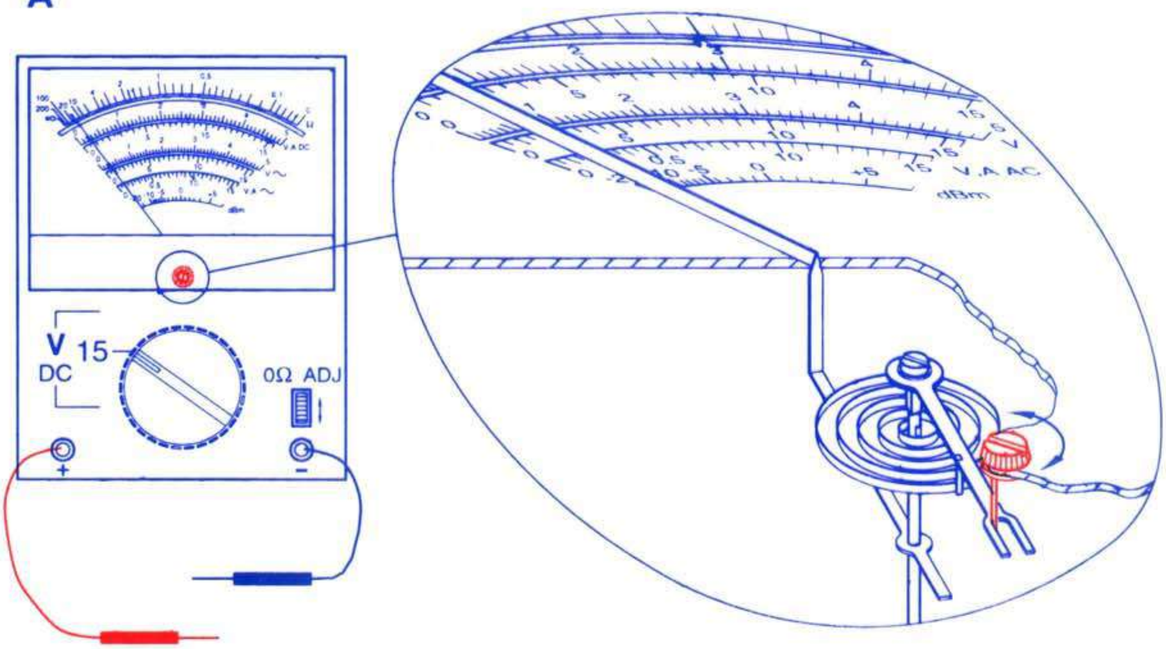

B

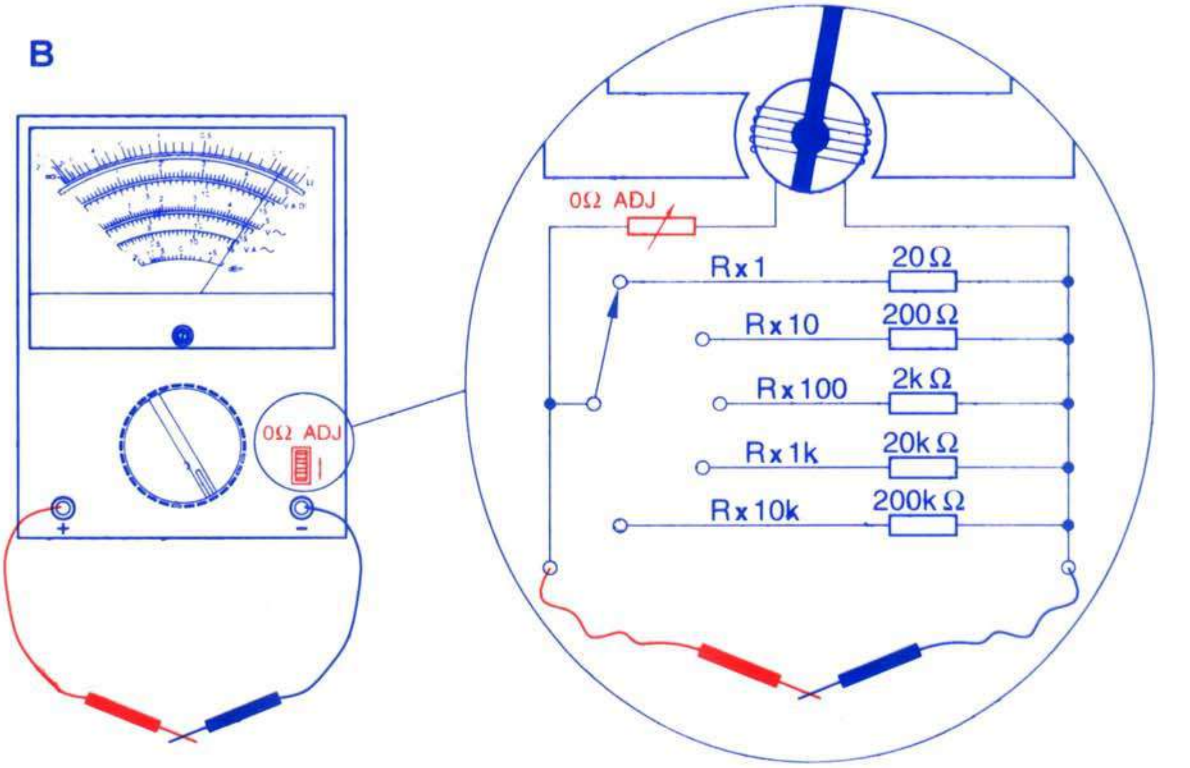

CURRENT CARRYING CONDUCTOR IN MAGNETIC FIELD

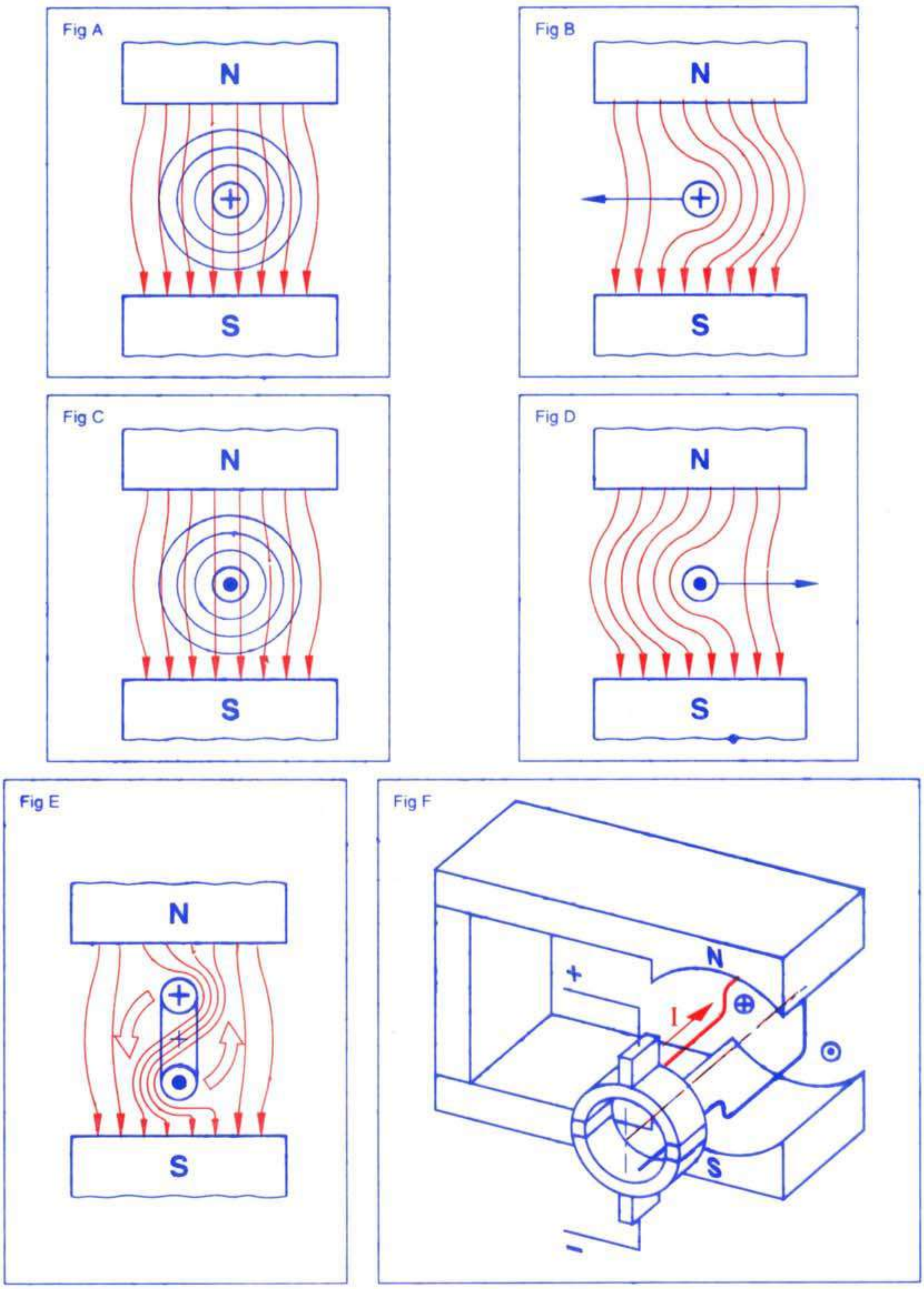

THREE POINT STARTER

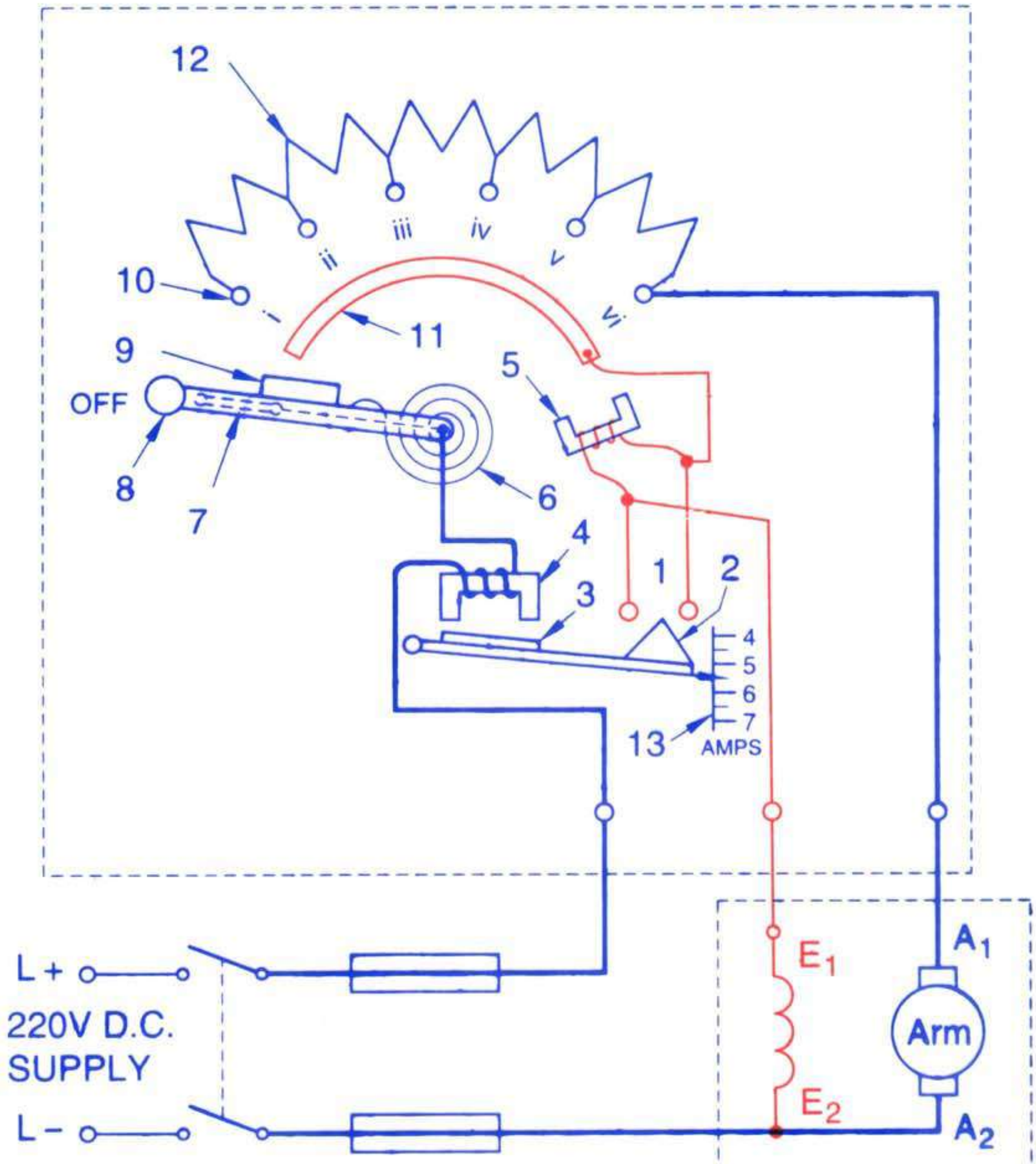

CIMI CENTRAL INSTRUCTIONAL MEDIA INSTITUTE, CHENNAI
INDO - GERMAN PROJECT

gtz

TR 04 06 01 04 98

FOUR POINT STARTER

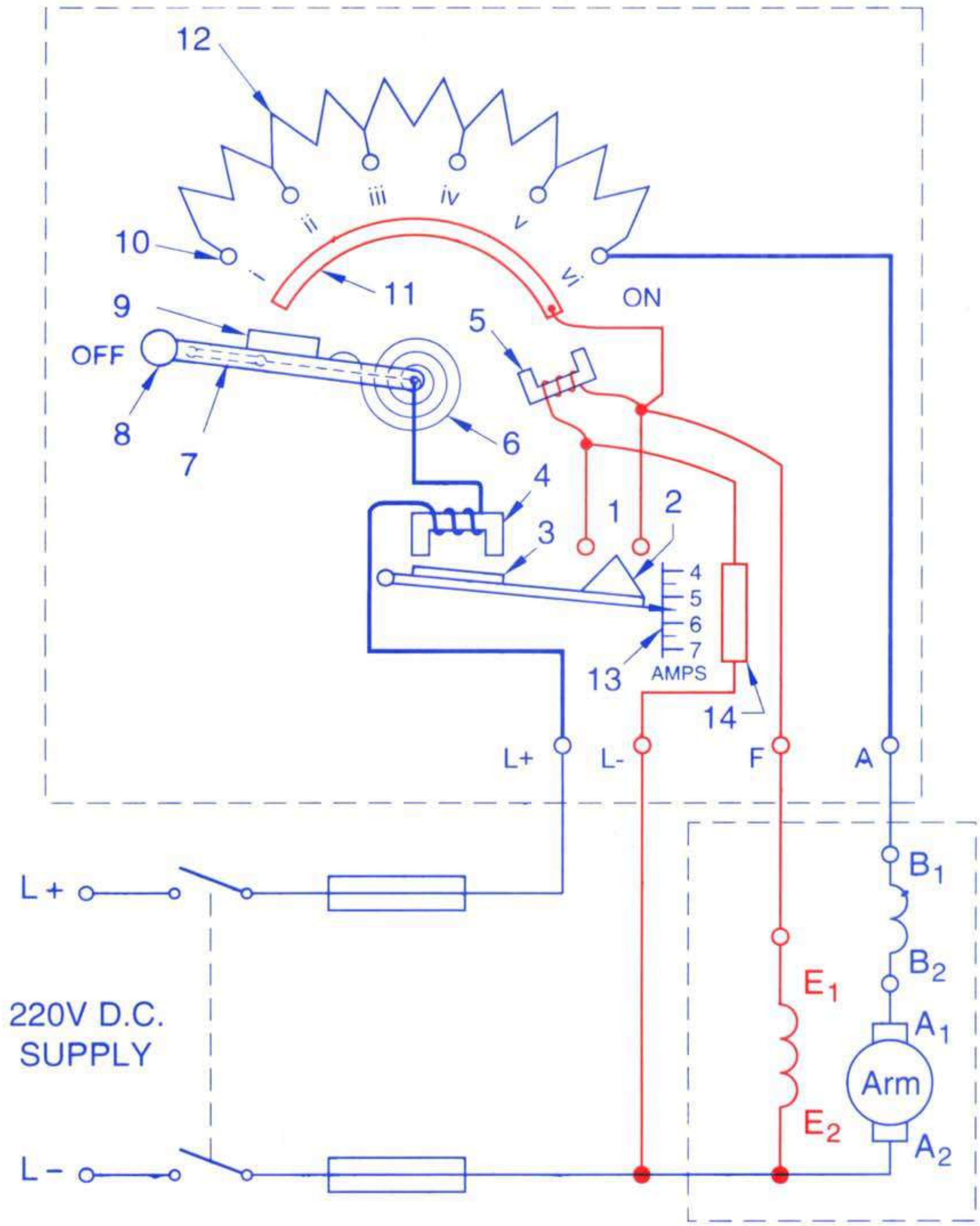

CENTRAL INSTRUCTIONAL MEDIA INSTITUTE, CHENNAI
INDO - GERMAN PROJECT

TR 04 05 02 01 98

PIPE EARTHING

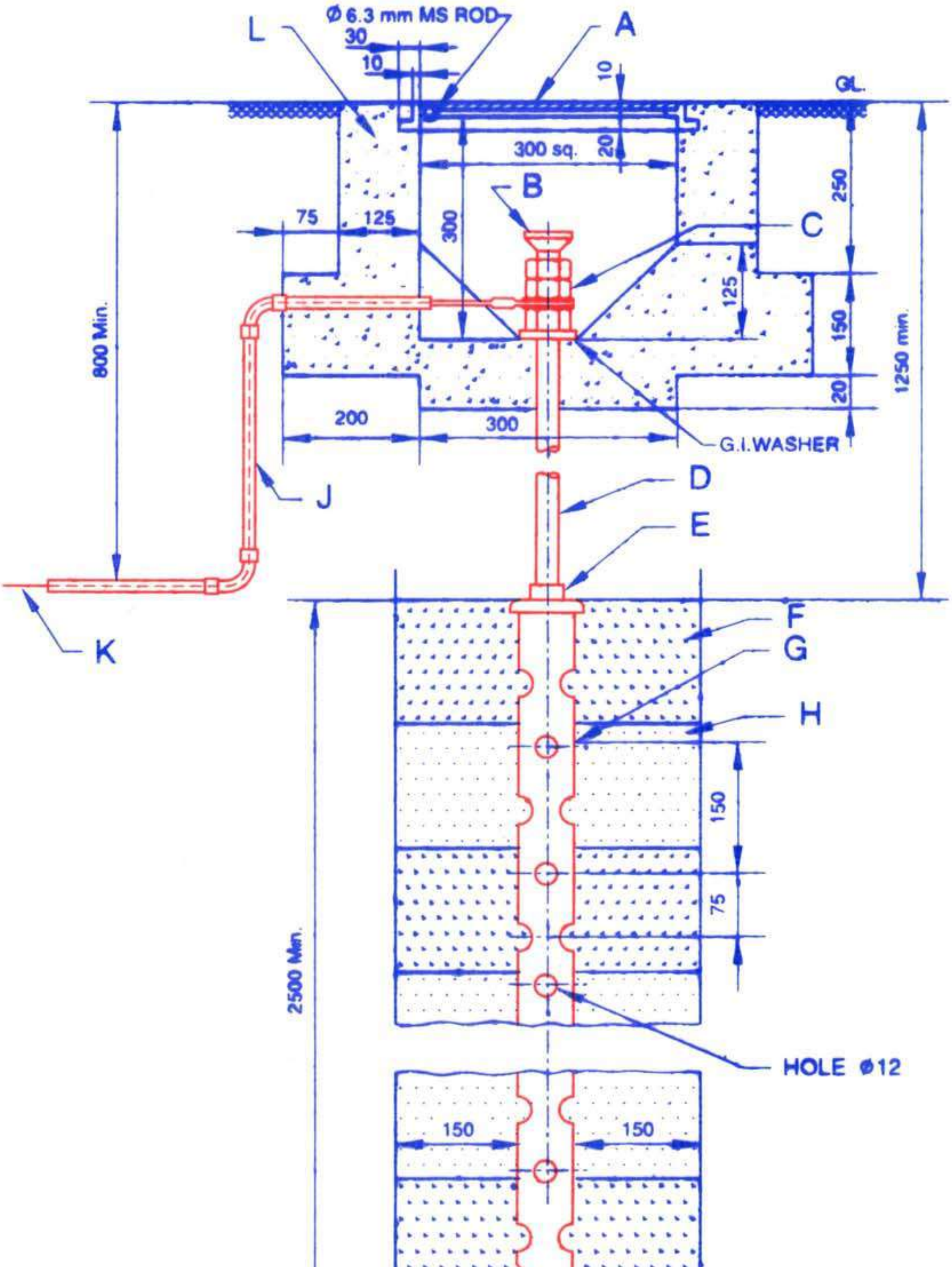

NOTE: DIMENSIONS ARE IN mm UNLESS OTHERWISE SPECIFIED.

CENTRAL INSTRUCTIONAL MEDIA INSTITUTE, CHENNAI
INDO - GERMAN PROJECT

TR 04 05 02 02 98

PLATE EARTHING

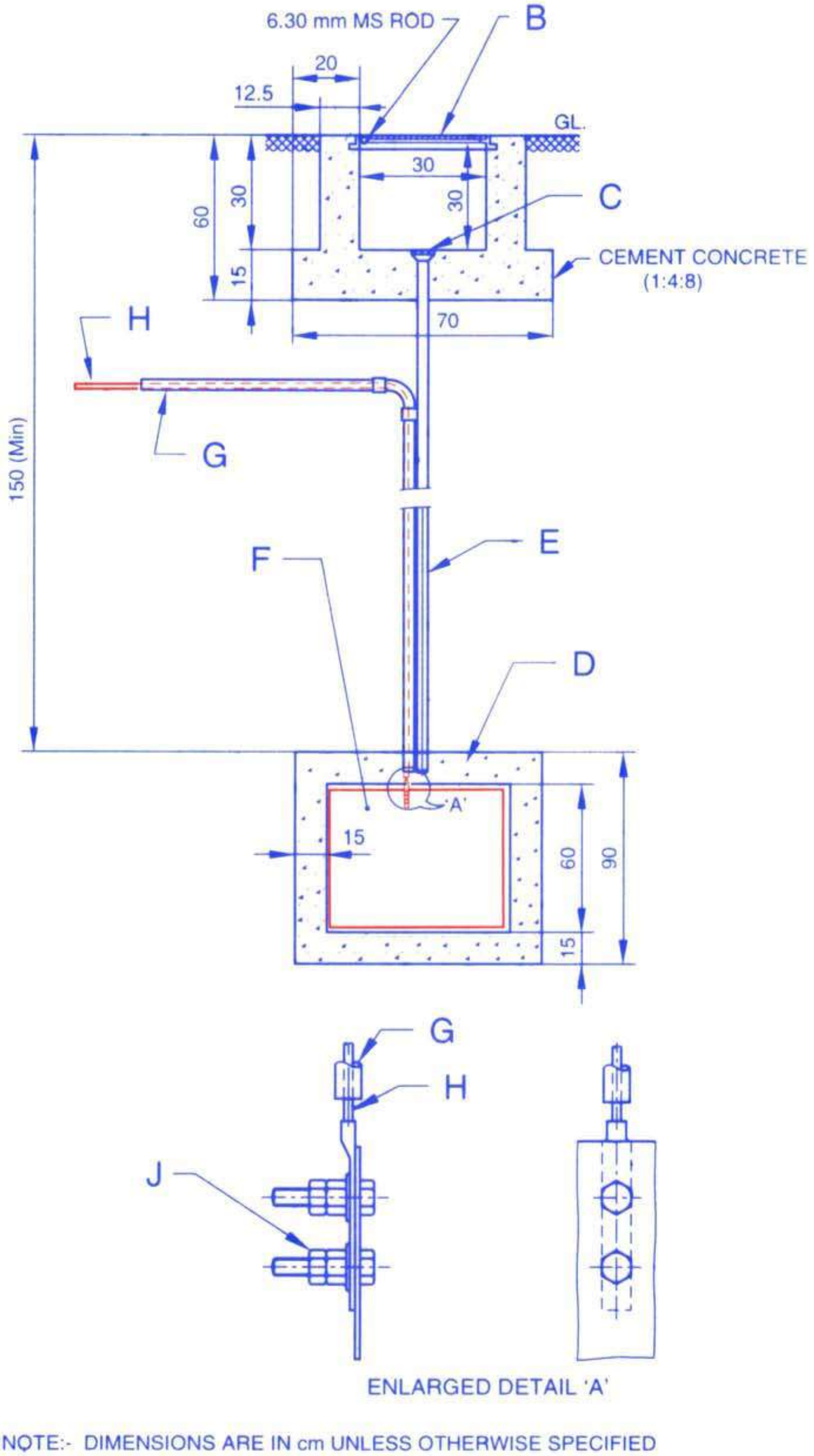

ENLARGED DETAIL 'A'

NOTE:- DIMENSIONS ARE IN cm UNLESS OTHERWISE SPECIFIED

MICROMETER PARTS AND GRADUATIONS

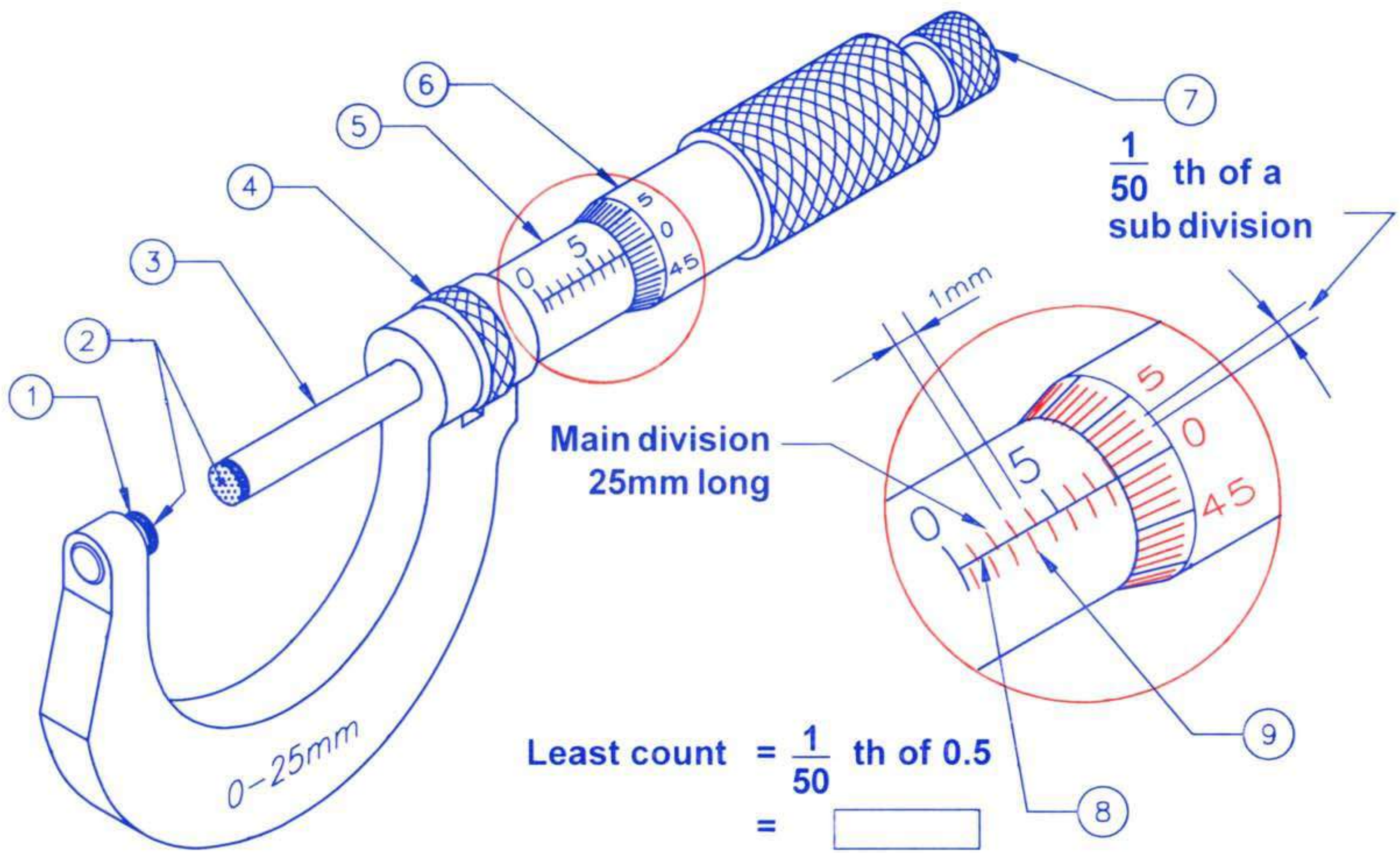

Least count $= \frac{1}{50}$ th of 0.5

$=$ ______

What is the range of the Micrometer?

INTERNAL CONNECTIONS OF THE MEGGER (INSULATION TESTER)

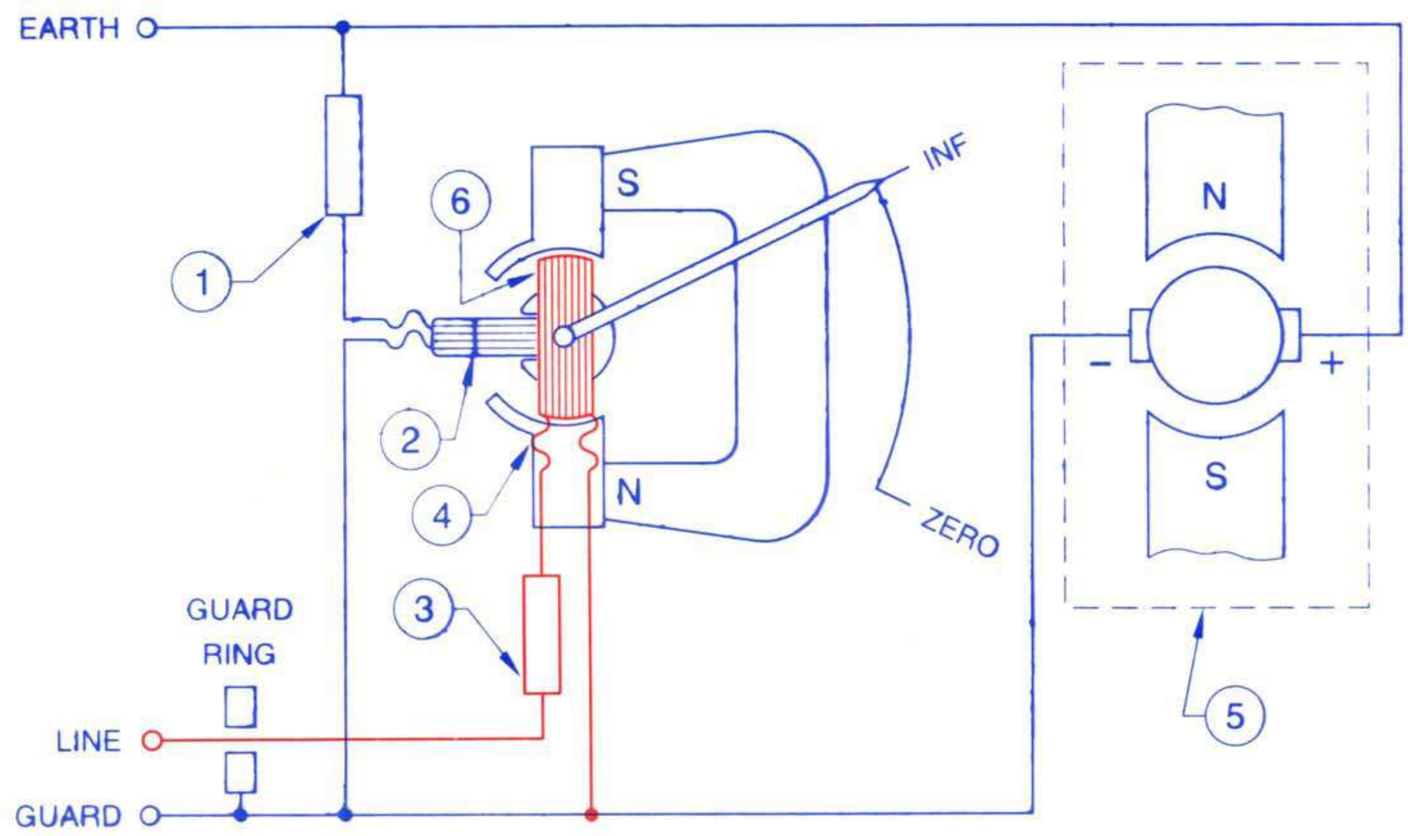

ROTATING MAGNETIC FIELD FROM A THREE-PHASE STATOR

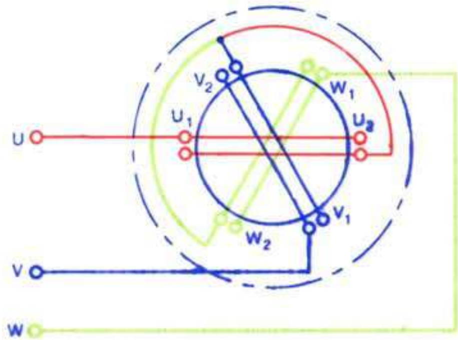

THREE-PHASE WINDING IN THE STATOR

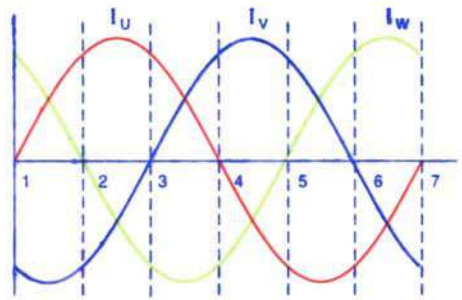

SINUSOIDAL WAVE-FORM OF 3-PHASE CURRENTS

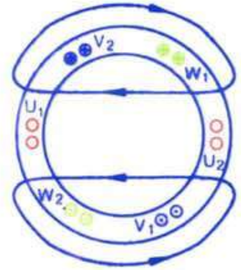

POSITION 1

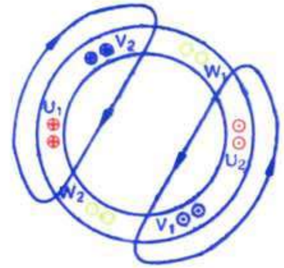

POSITION 2

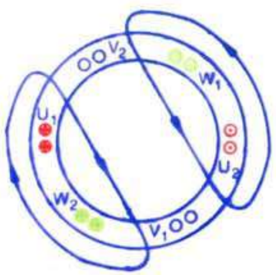

POSITION 3

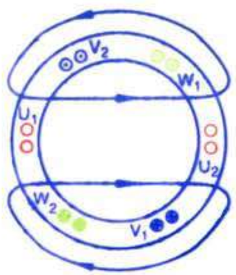

POSITION 4

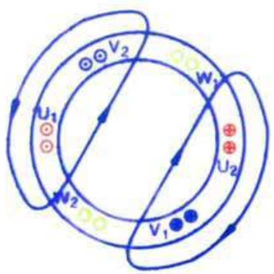

POSITION 5

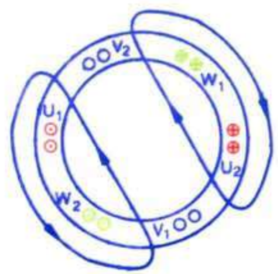

POSITION 6

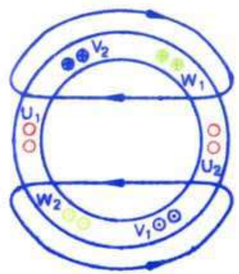

POSITION 7

D.O.R. OF ROTATING MAGNETIC FIELD

CIMI CENTRAL INSTRUCTIONAL MEDIA INSTITUTE, CHENNAI
INDO - GERMAN PROJECT

gtz

TR 04 03 02 01 98

SINGLE PHASE ENERGY METER - INDUCTION TYPE

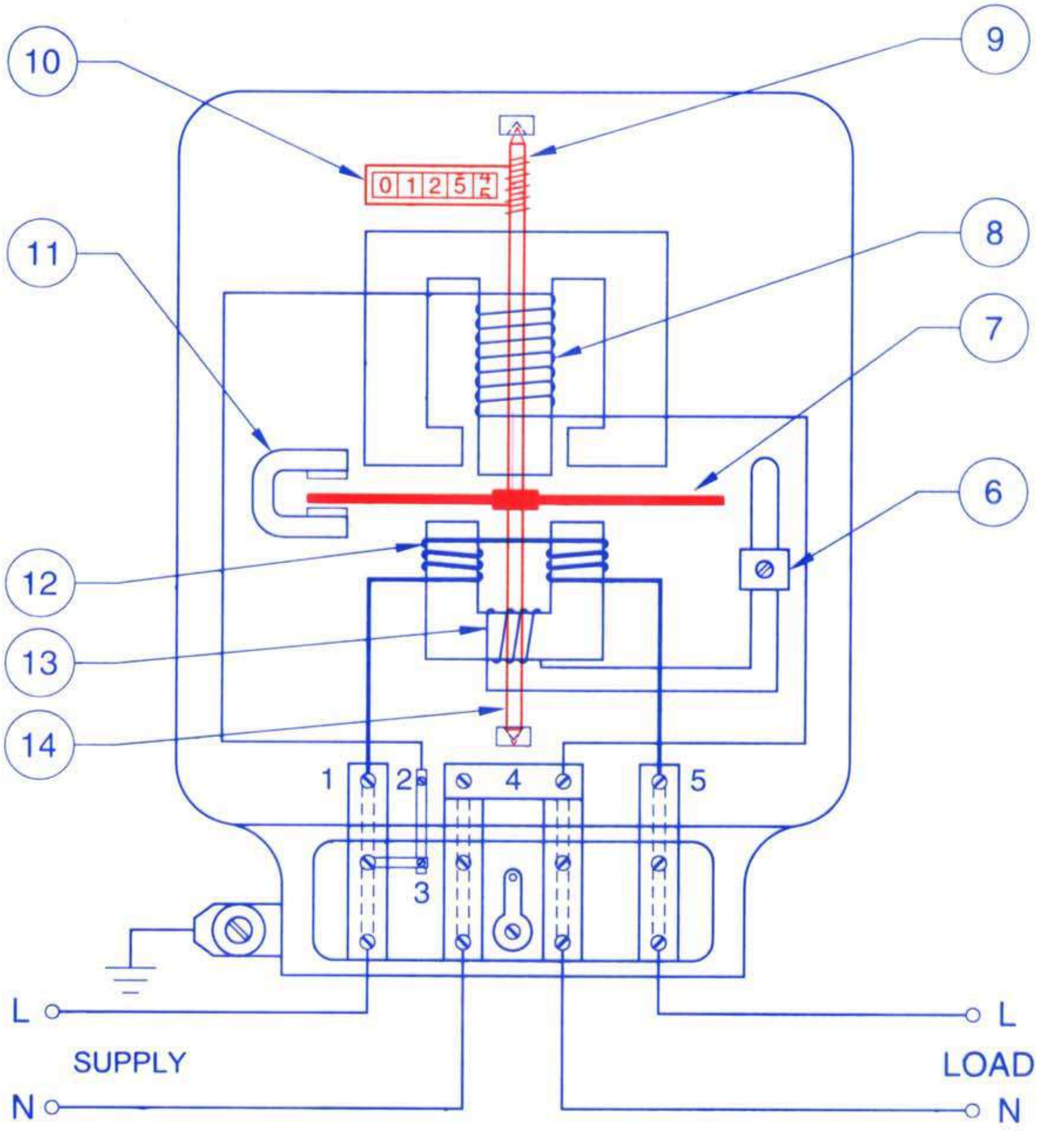

CENTRAL INSTRUCTIONAL MEDIA INSTITUTE, CHENNAI
INDO - GERMAN PROJECT

TR 04 05 01 01 98

TEST ON DOMESTIC WIRING INSTALLATION

CONTINUTY TEST

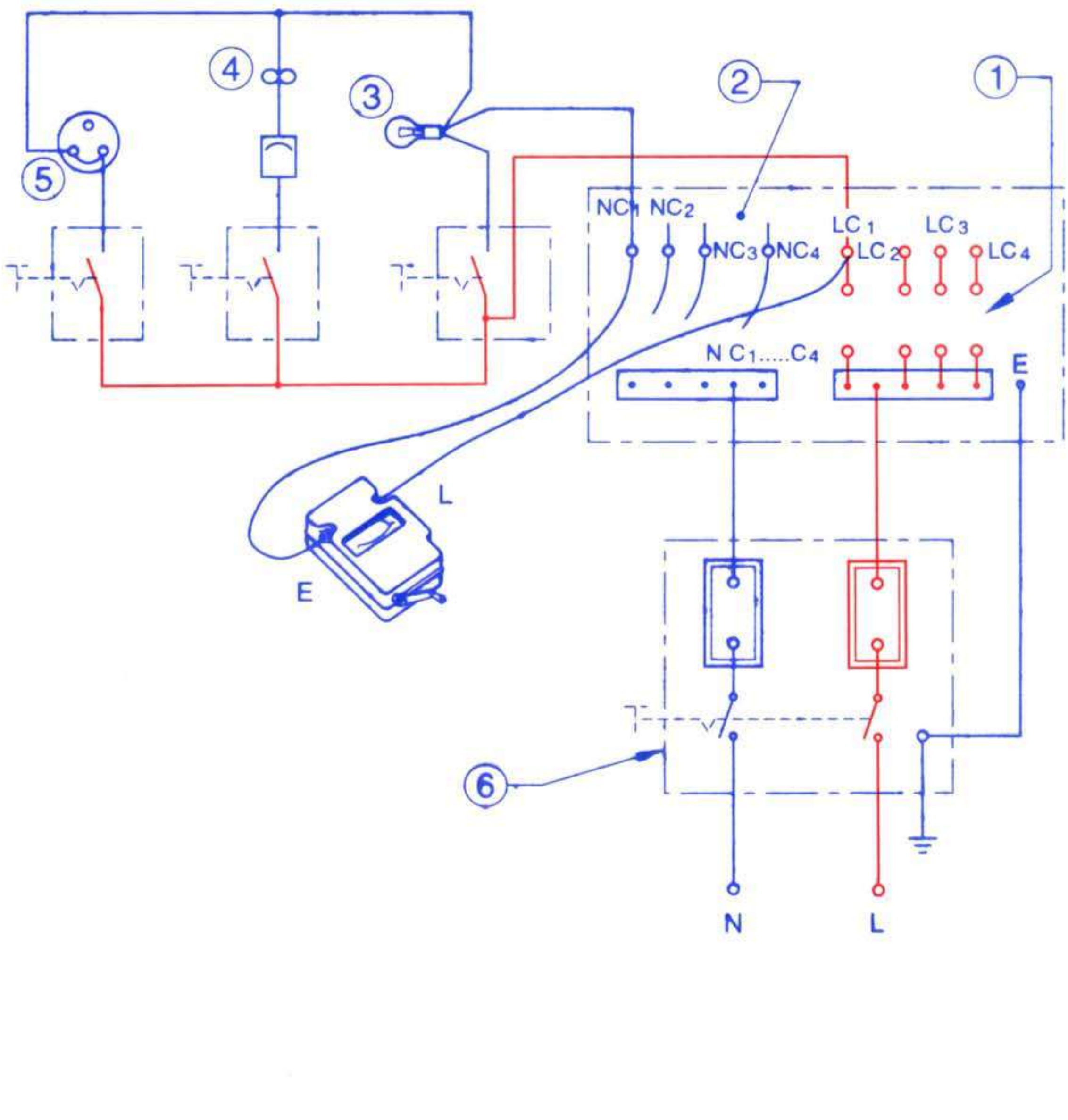

TEST ON DOMESTIC WIRING INSTALLATION
- INSULATION RESISTANCE TEST BETWEEN CONDUCTORS

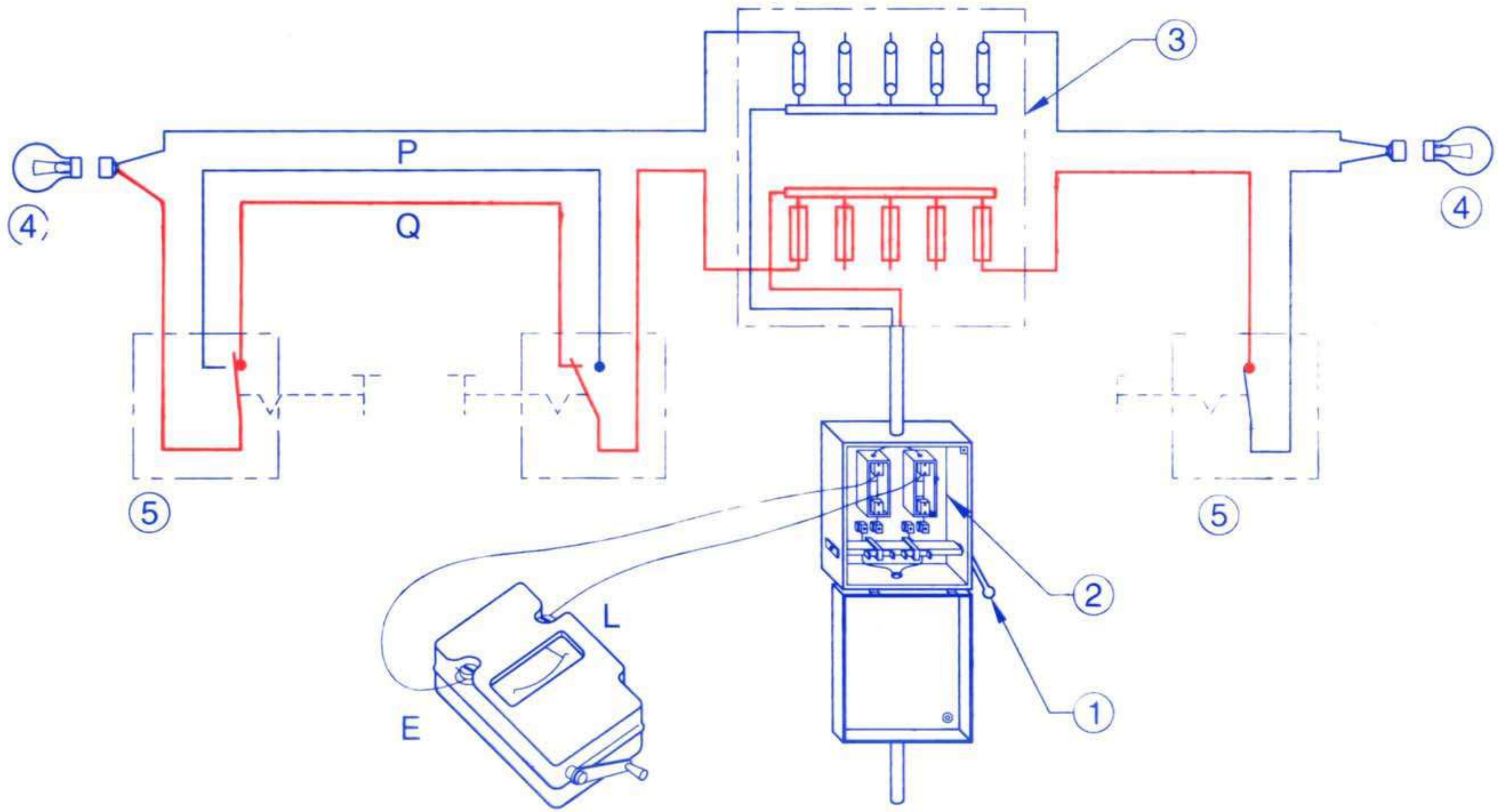

CIMI CENTRAL INSTRUCTIONAL MEDIA INSTITUTE, CHENNAI
INDO - GERMAN PROJECT
gtz
TR 04 05 01 03 98

TEST ON DOMESTIC WIRING INSTALLATION

INSULATION RESISTANCE TEST BETWEEN CONDUCTORS AND EARTH

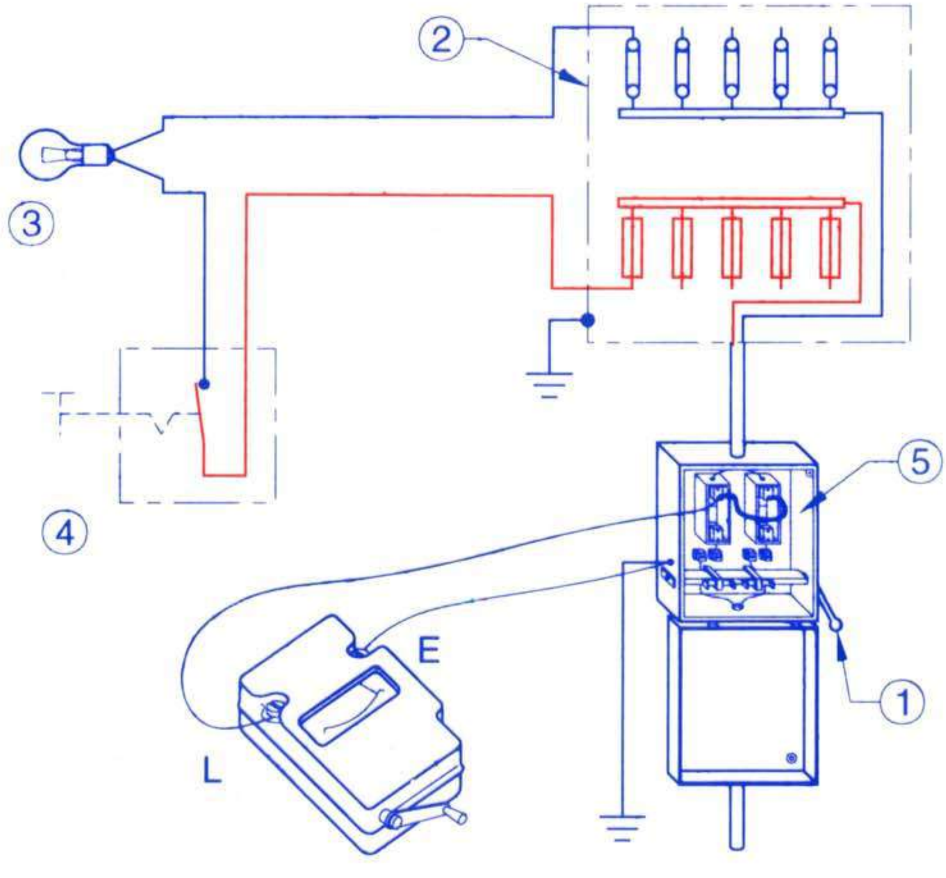

TEST ON DOMESTIC WIRING INSTALLATION - POLARITY TEST

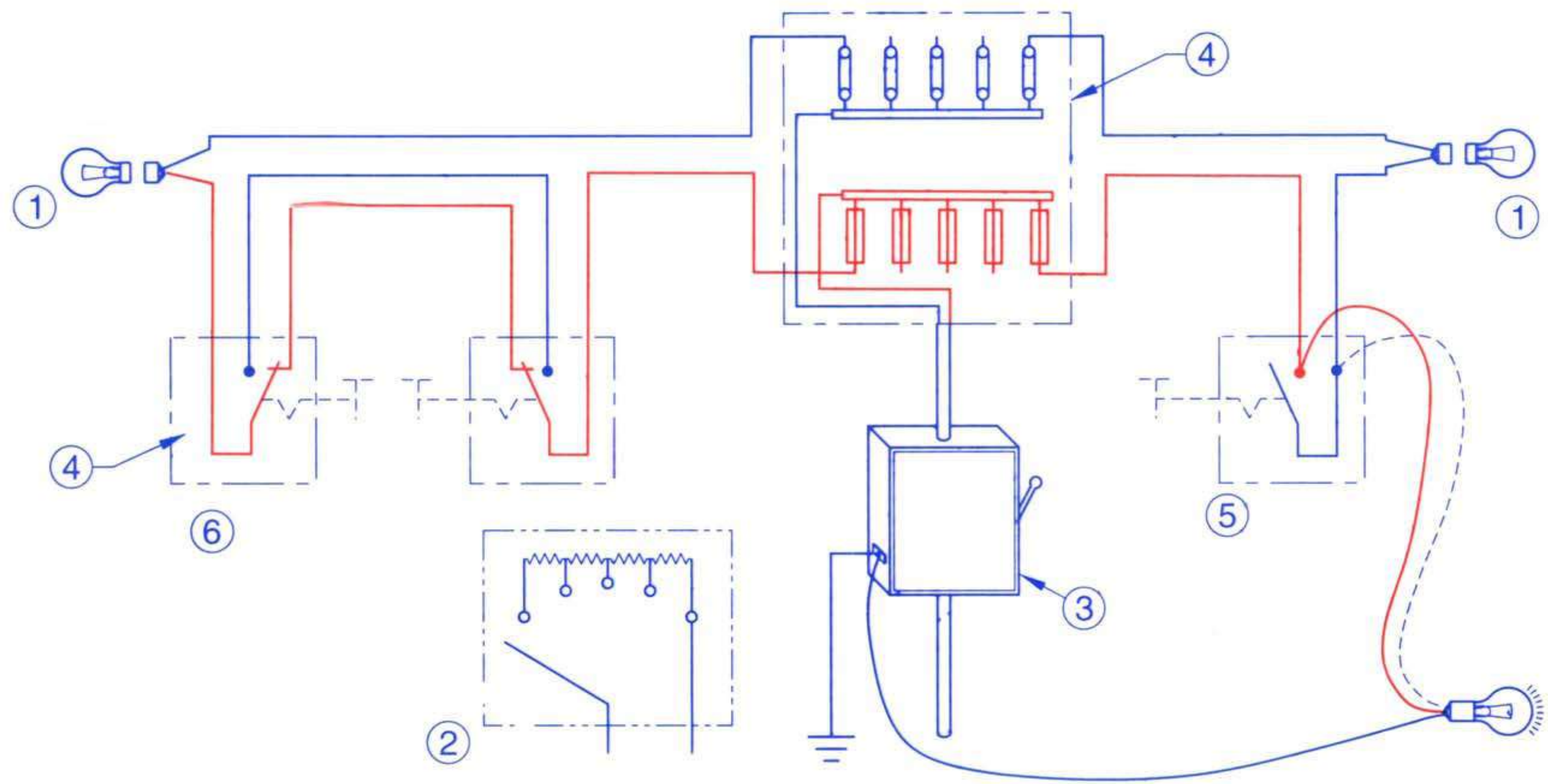

GENERATION OF AC

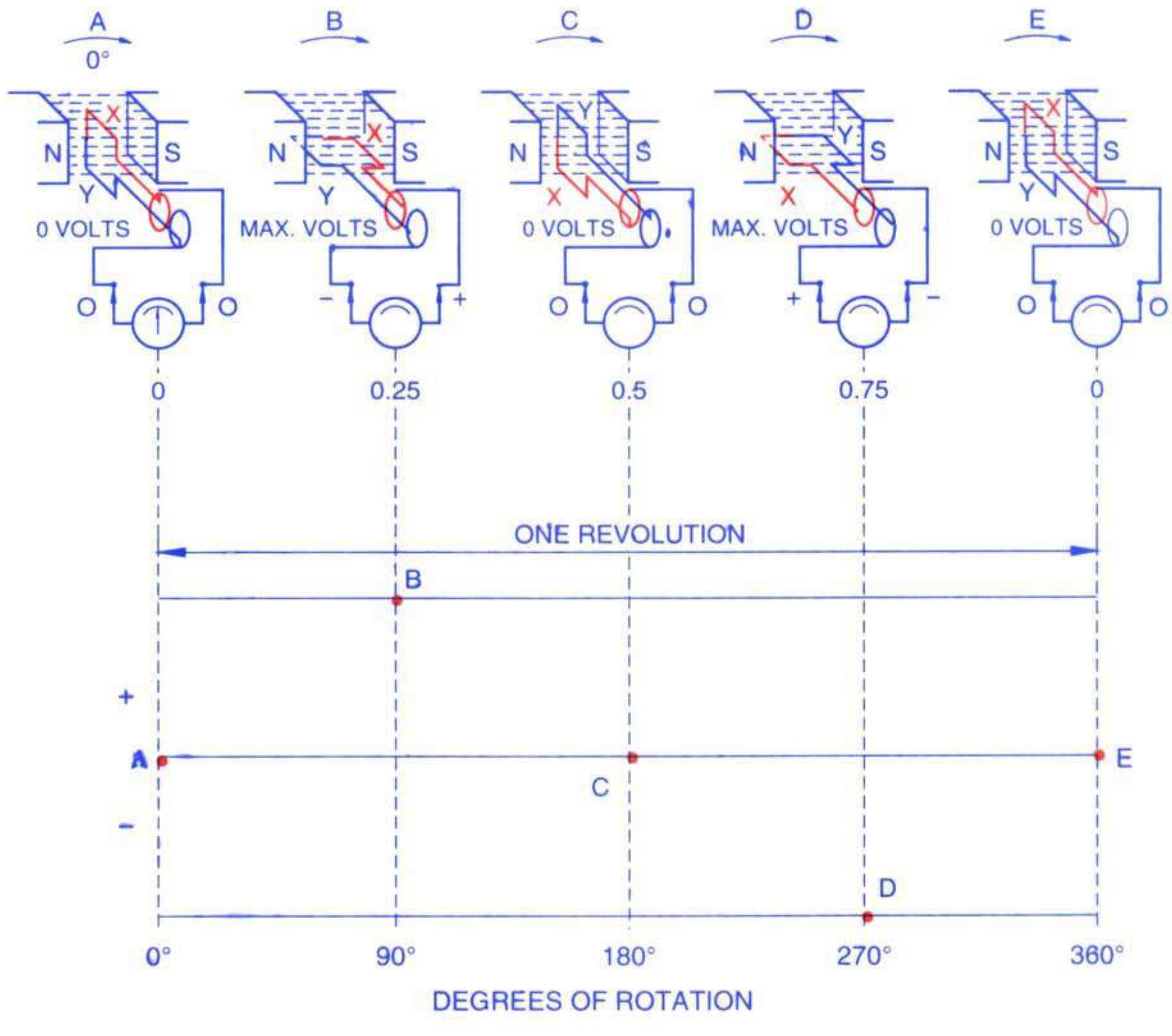

GENERATION OF AN ALTERNATING VOLTAGE:

AS THE LOOP ROTATES THROUGH THE MAGNETC FIELD, THE MAGNITUDE AND DIRECTION OF THE VOLTAGE CHANGES WITH ANGLE AND DIRECTION OF MOTION.

CIMI CENTRAL INSTRUCTIONAL MEDIA INSTITUTE, CHENNAI
INDO - GERMAN PROJECT

gtz

TR 04 06 04 01 98

PARTS OF AN UNIVERSAL MOTOR

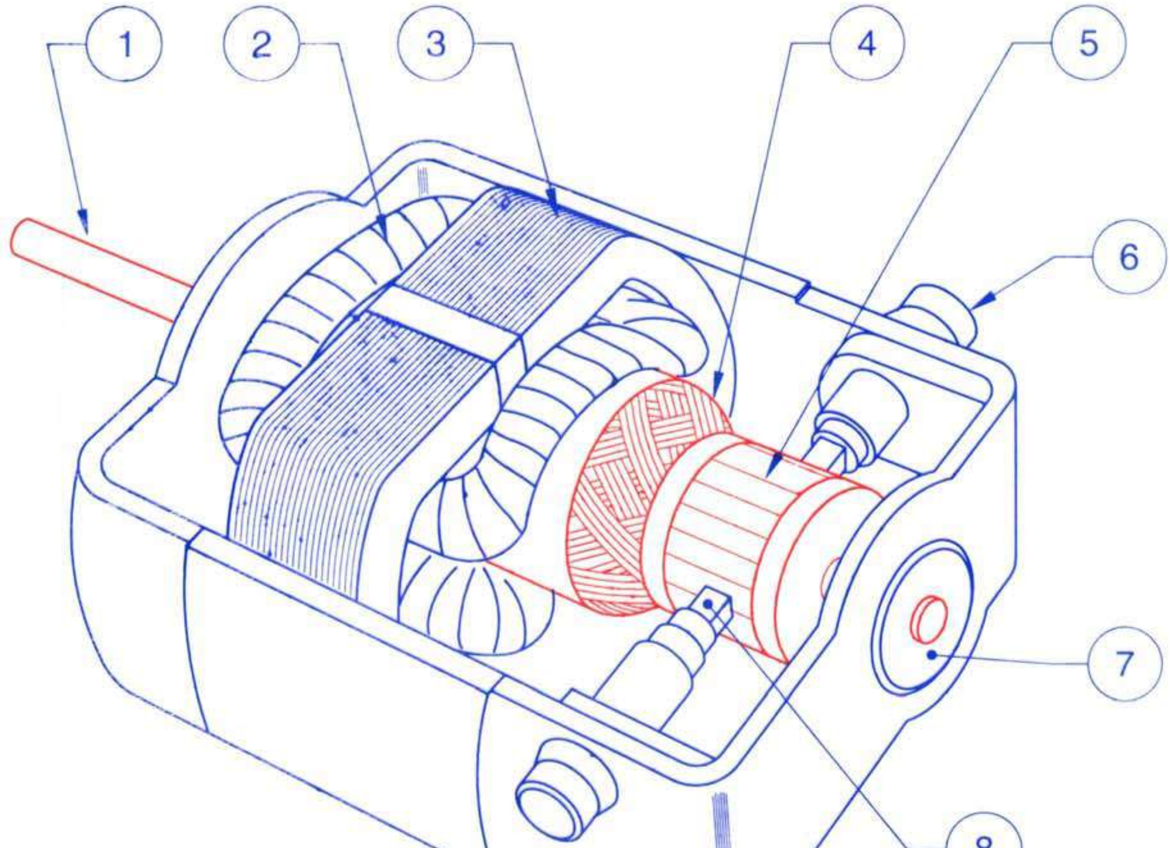

CIMI CENTRAL INSTRUCTIONAL MEDIA INSTITUTE, CHENNAI
INDO - GERMAN PROJECT

gtz

TR 04 08 01 01 98

RESISTOR COLOUR CODING

COLOUR	1st	2nd	MULTIPLIER	TOLERANCE
BLACK	0	0	1	
BROWN	1	1	10	
RED	2	2	100	
ORANGE	3	3	1000	
YELLOW	4	4	10 000	
GREEN	5	5	100 000	
BLUE	6	6	1 000 000	
VIOLET	7	7	10 000 000	
GRAY	8	8	100 000 000	
WHITE	9	9	1 000 000 000	
GOLD			0.1	5
SILVER			0.01	10
NONE				20
	BAND 1	BAND 2	BAND 3	BAND 4

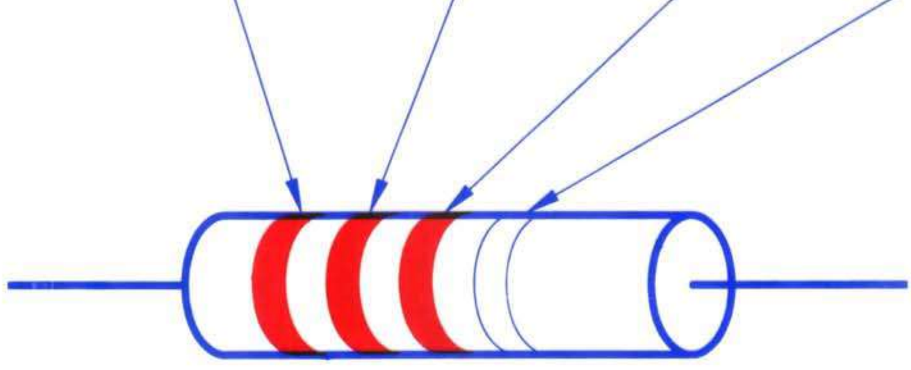

MACHINIST
2nd YEAR
TRANSPARENCIES

CIMI CENTRAL INSTRUCTIONAL MEDIA INSTITUTE, MADRAS
AN INDO - GERMAN PROJECT
gtz

Directorate General of Employment and Training, Ministry of Labour, Govt. of India.

Developed by
CENTRAL INSTRUCTIONAL MEDIA INSTITUTE
in collaboration with Deutsche Gesellschaft für Technische Zusammenarbeit (GTZ), Germany
P.O. Box 3142, CTI Campus, Guindy, Chennai - 600 032 Phone: 2233 4248, 2234 5257 Fax: (0091-44) 2234 2791

SLIP GAUGES

PRECISION LENGTH MEASUREMENT

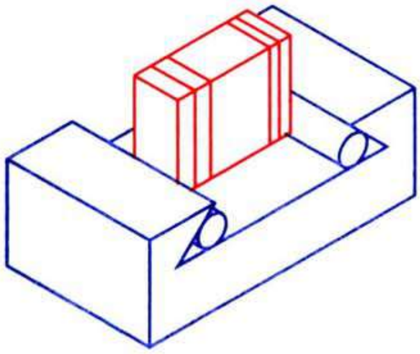

AVAILABLE IN SETS

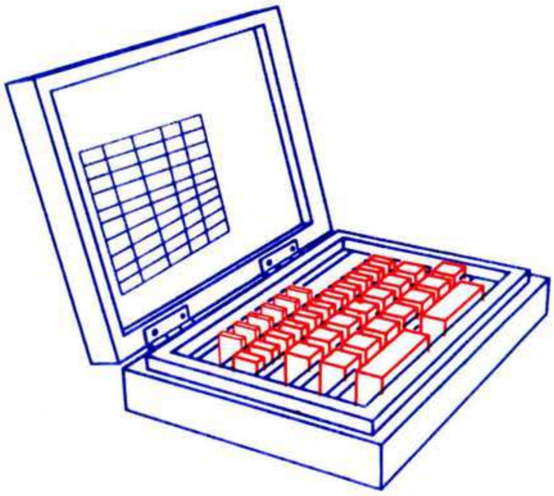

WRINGING OF SLIP GAUGES

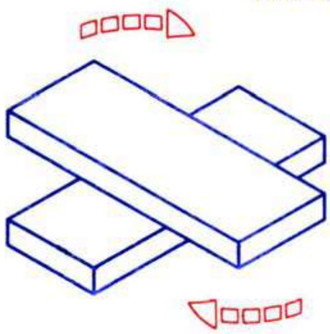

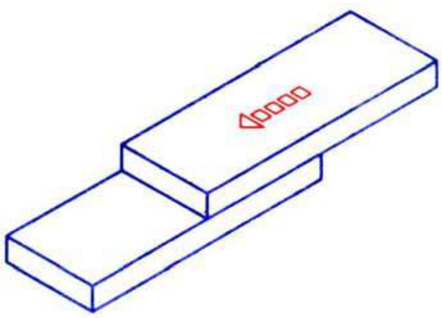

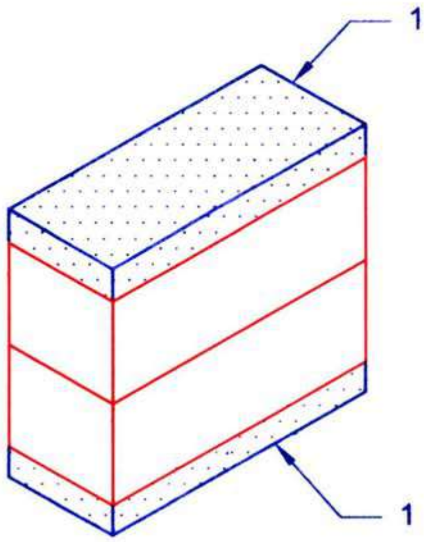

CIMI CENTRAL INSTRUCTIONAL MEDIA INSTITUTE, CHENNAI
INDO - GERMAN PROJECT

gtz

TR 01 01 01 02 02

DETERMINING SLIP GAUGE SIZE

PROCEDURE	SLIPS USED	CALCULATION
a) Write the required dimension		74.643
b) Select 1st series slip that has the same last digit	(Subtract)	73.640
c) Select 2nd series slip - same last figure & the remainder must be either 0.0 or 0.5	(Subtract)	72.500
d) Select a 3rd series slip - expected remainder must be a 4th series figure	(Subtract)	50.000
e) Select the 4th series slip -remainder must be zero	(Subtract)	0

Range (mm)	Steps (mm)	No.of pieces
Special pieces 1.0005		1
1st Series 1.001 to 1.009	0.001	9
2nd series 1.01 to 1.49	0.01	49
3rd series 0.5 to 24.5	0.5	49
4th series 25.0 to 100.0	25.0	4
Total pieces		112

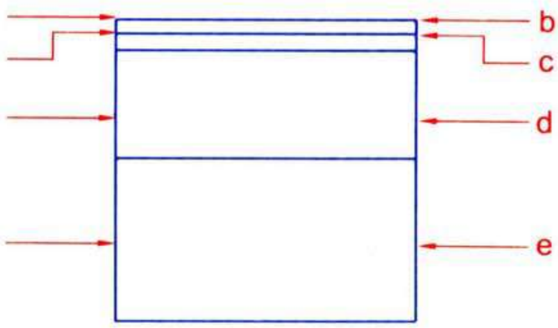

SPECIAL MICROMETERS

FLANGE MICROMETER

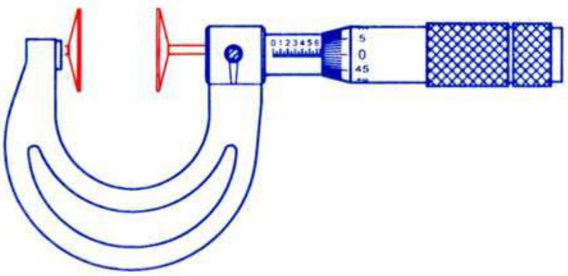

DIGITAL MICROMETER

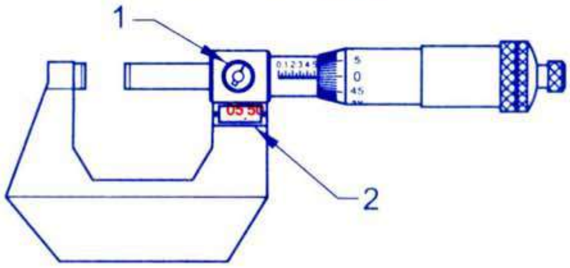

TUBE MICROMETER

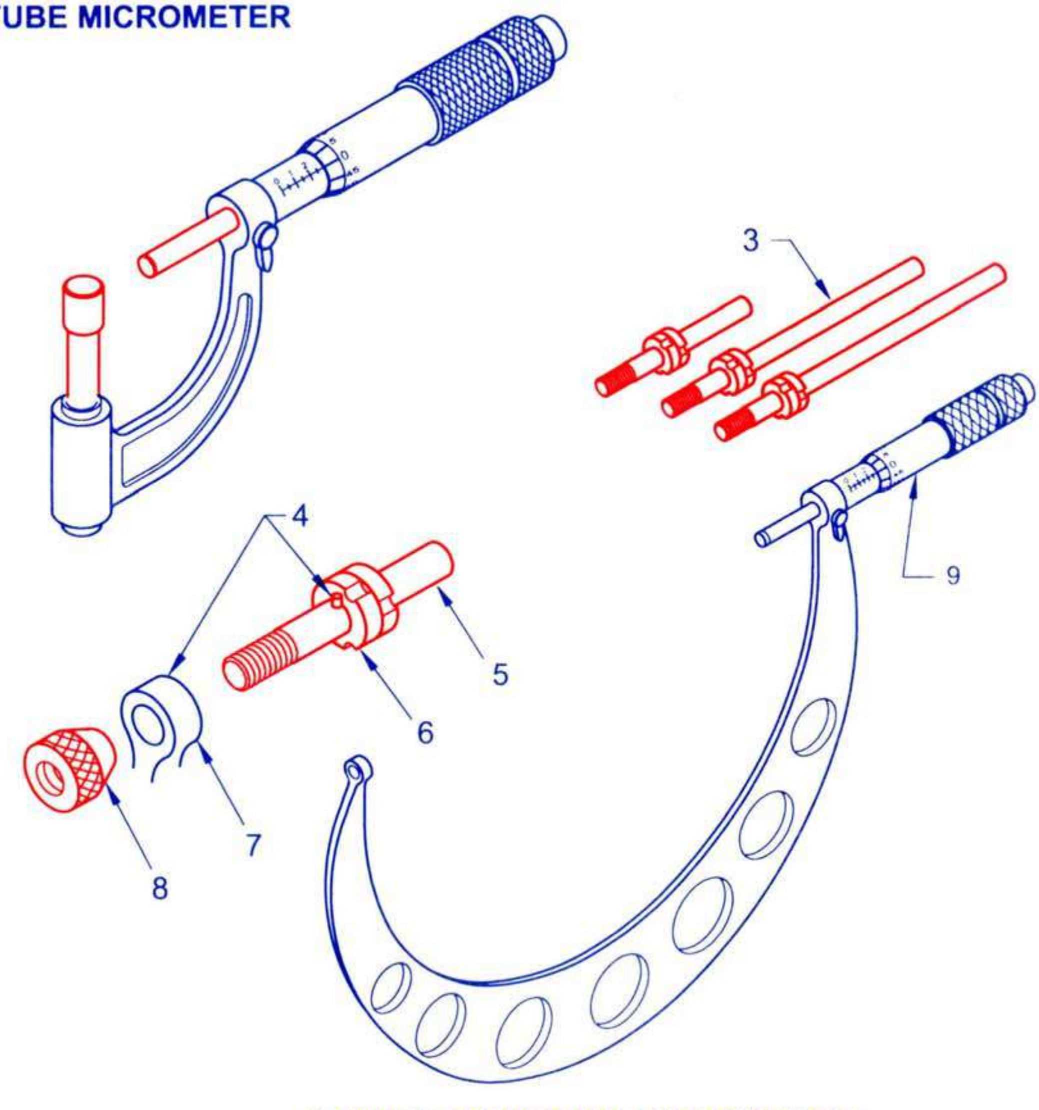

A SINGLE EXTERNAL MICROMETER WITH INTERCHANGEABLE ANVIL

CENTRAL INSTRUCTIONAL MEDIA INSTITUTE, CHENNAI
INDO - GERMAN PROJECT

TR 01 01 09 04 02

DRILL JIG

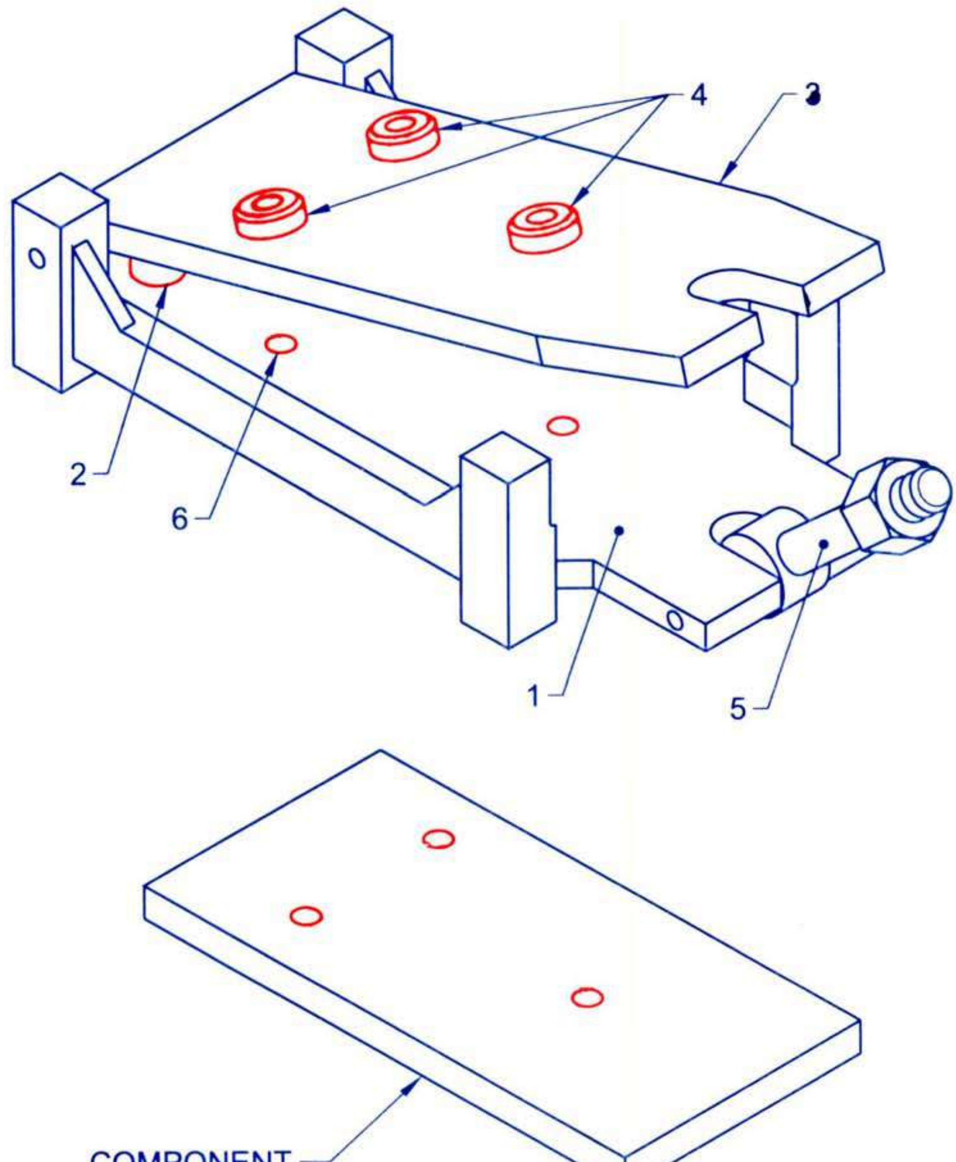

FIXTURES

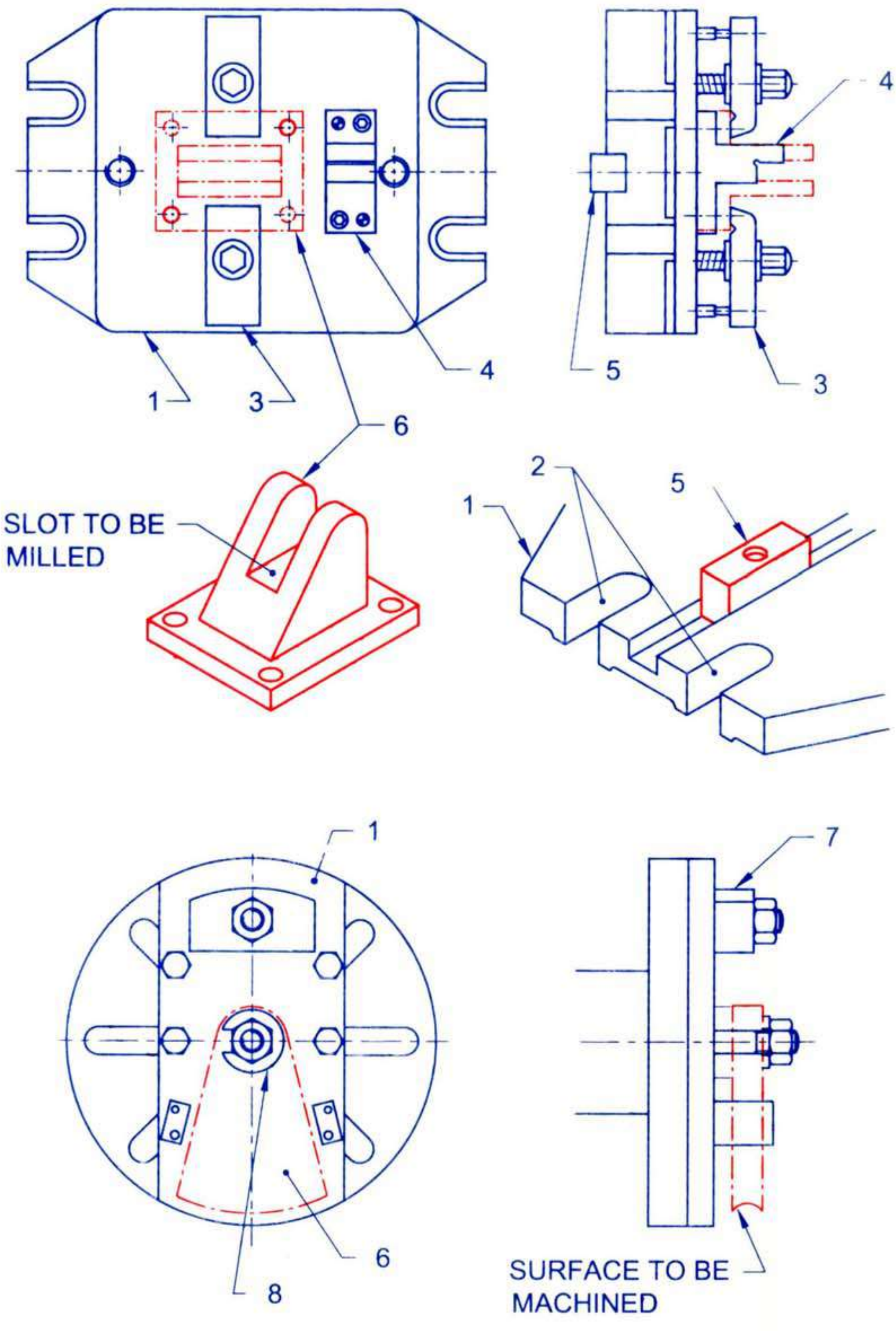

CENTRAL INSTRUCTIONAL MEDIA INSTITUTE, CHENNAI
INDO - GERMAN PROJECT

TR 01 01 11 06 02

LIMIT PLUG GAUGES

DOUBLE ENDED PLUG GAUGE

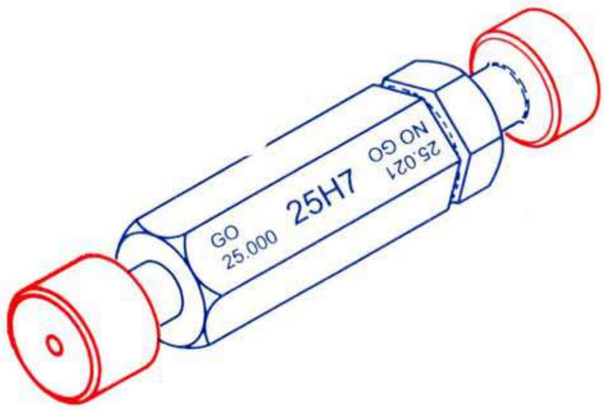

PROGRESSIVE PLUG GAUGE

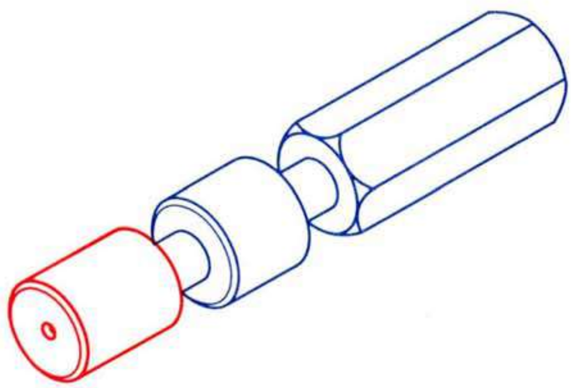

TAPER PLUG GAUGE

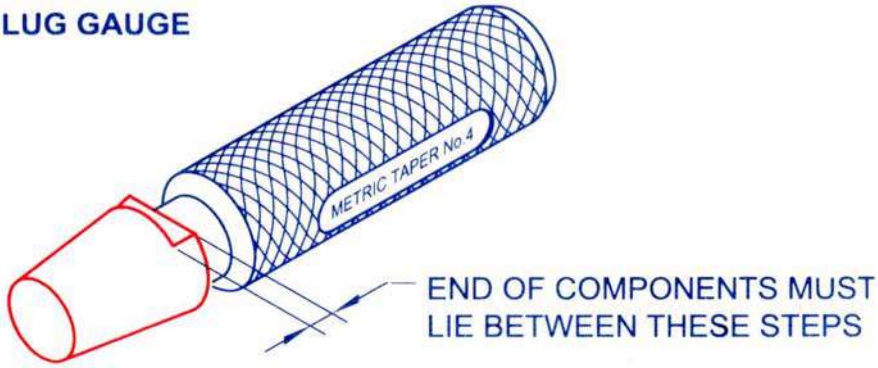

CIMI CENTRAL INSTRUCTIONAL MEDIA INSTITUTE, CHENNAI
INDO - GERMAN PROJECT

gtz

TR 01 01 11 07 02

LIMIT RING AND SNAP GAUGES

LIMIT RING GAUGE

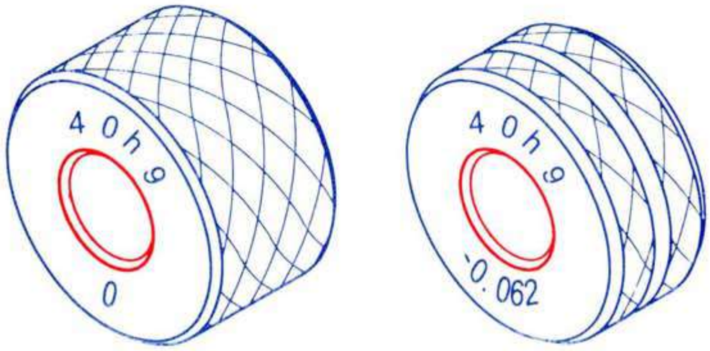

TAPER RING GAUGE

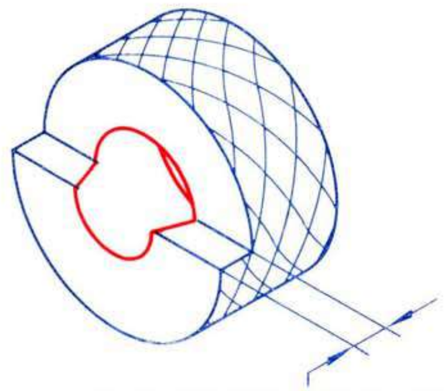

END OF COMPONENTS MUST
LIE BETWEEN THESE STEPS

SNAP GAUGE

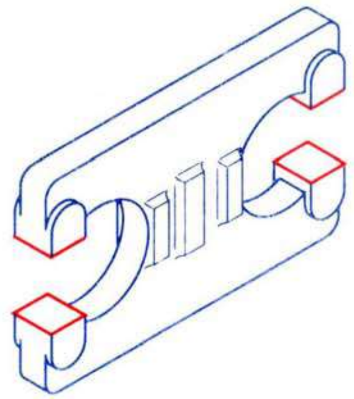

ADJUSTABLE SNAP GAUGE

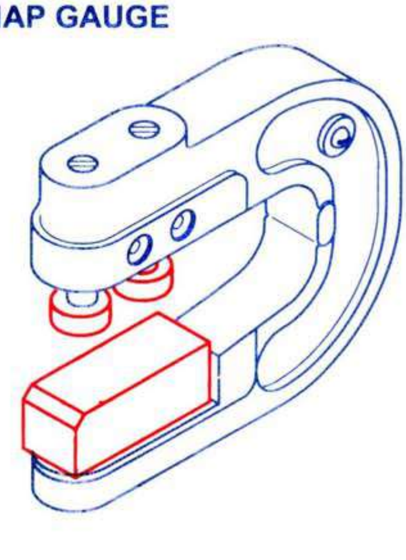

SHAPER STROKE LENGTH & CUTTING SPEED

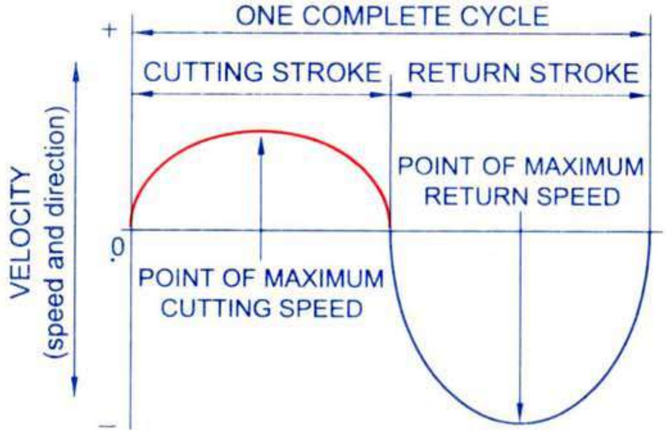

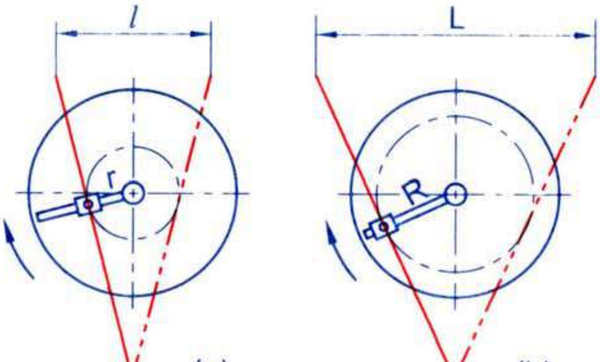

(a) (b)

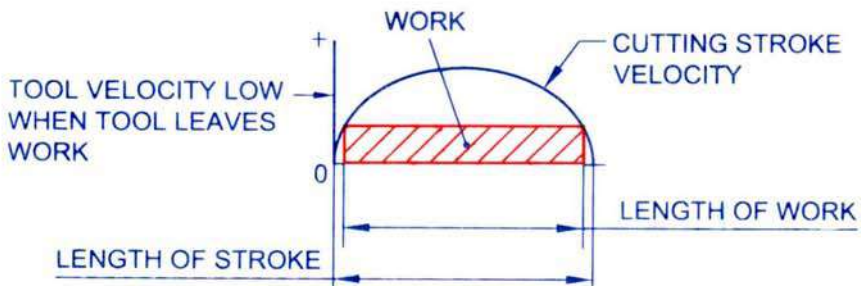

Correct setting of stroke length matched to the length of work

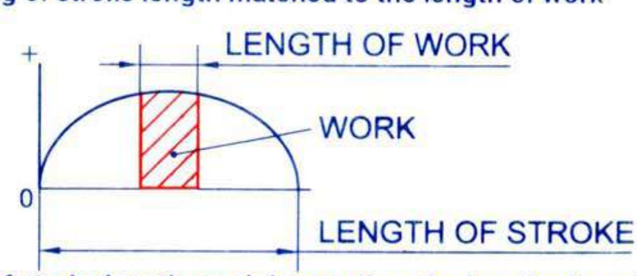

Incorrect setting of stroke length much longer than the length of work

CENTRAL INSTRUCTIONAL MEDIA INSTITUTE, CHENNAI
INDO - GERMAN PROJECT

TR 01 02 13 09 02

HARDNESS TESTING -BRINELL

BRINELL HARDNESS TESTER

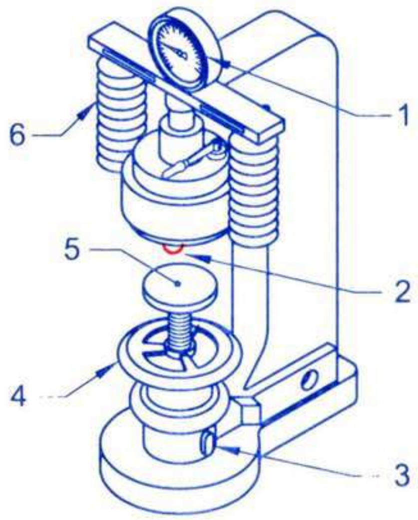

A. APPLY LOAD

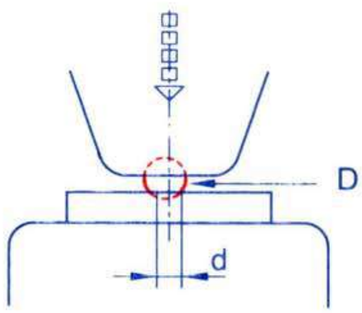

B. MAKE IMPRESSION

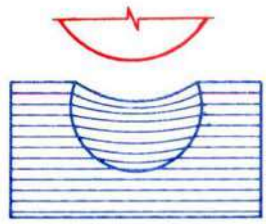

C. MEASURE MEAN DIAMETER OF IMPRESSION

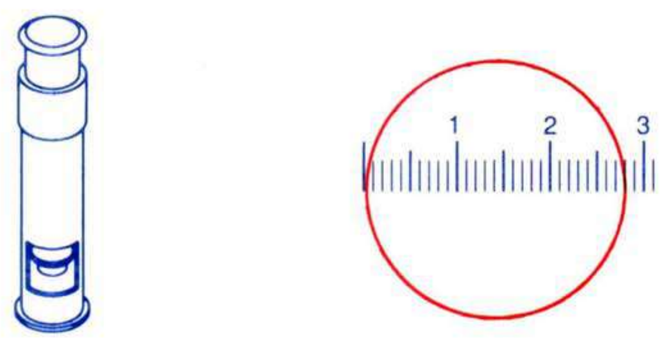

D. APPLY FORMULA AND GET VALUE

HARDNESS TESTING - VICKER

VICKER'S HARDNESS TESTER

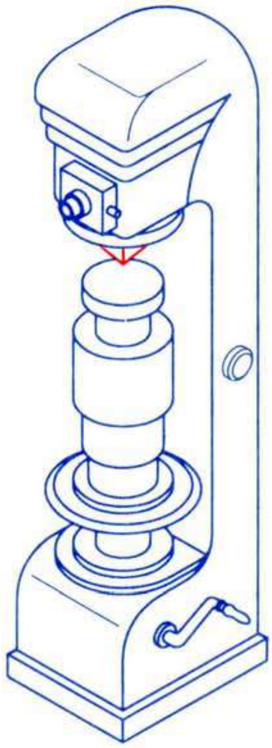

INDENTING TOOL

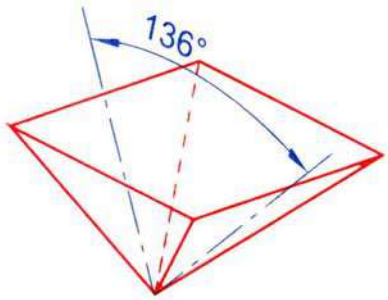

- APPLY LOAD
- MAKE DIAMOND SHAPED IMPRESSION

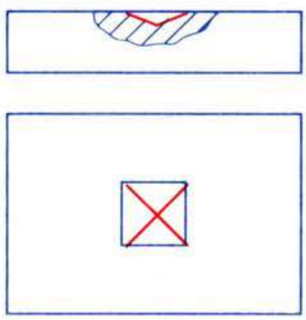

- MEASURE MEAN DIAGONAL OF IMPRESSION
- USE FORMULA AND GET HARDNESS VALUE

CIMI CENTRAL INSTRUCTIONAL MEDIA INSTITUTE, CHENNAI
INDO - GERMAN PROJECT

TR 01 02 13 11 02

HARDNESS TESTING - ROCKWELL

ROCKWELL HARDNESS TESTER

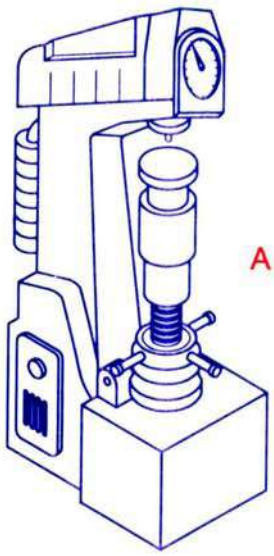

INDENTING TOOL BALL OR DIAMOND TOOL

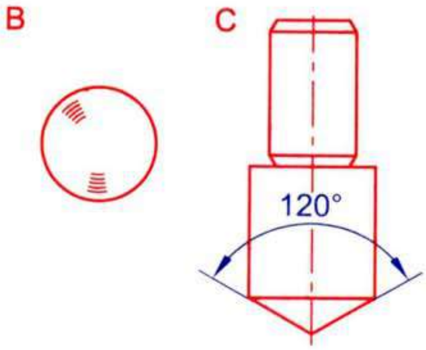

METHOD OF APPLYING LOAD

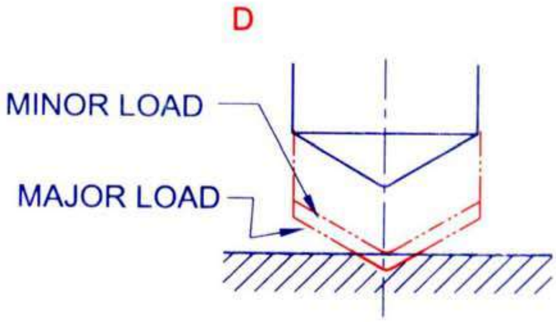

READING AND CONVERSION

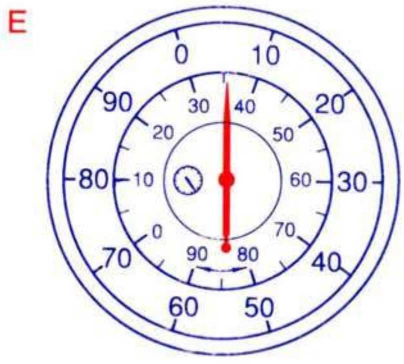

TOOL MAKER'S BUTTON

SET OF BUTTONS

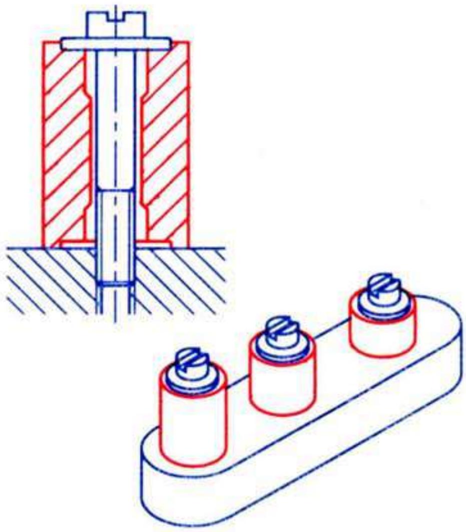

MARK HOLE POSITION

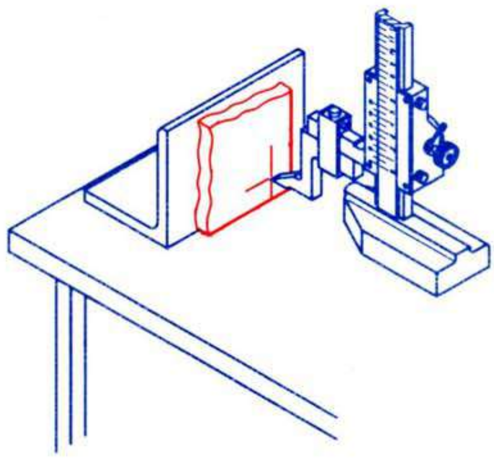

DRILL & TAP

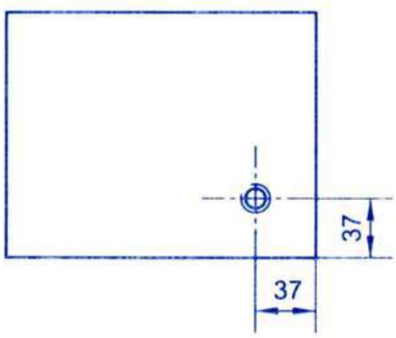

SET BUTTONS

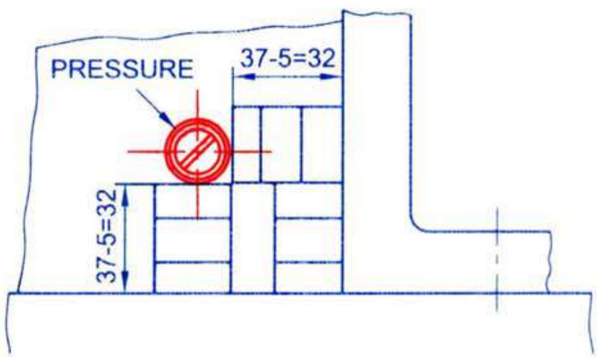

POSITION THE WORK

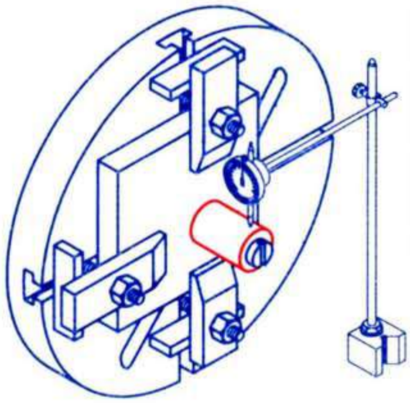

DRILL & BORE

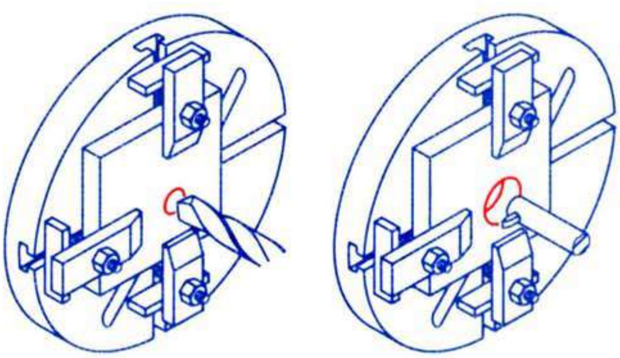

CENTRAL INSTRUCTIONAL MEDIA INSTITUTE, CHENNAI
INDO - GERMAN PROJECT
gtz
TR 01 03 23 13 02

MEASUREMENT OF SCREW THREAD ELEMENTS - I

ELEMENTS FOR MEASUREMENT

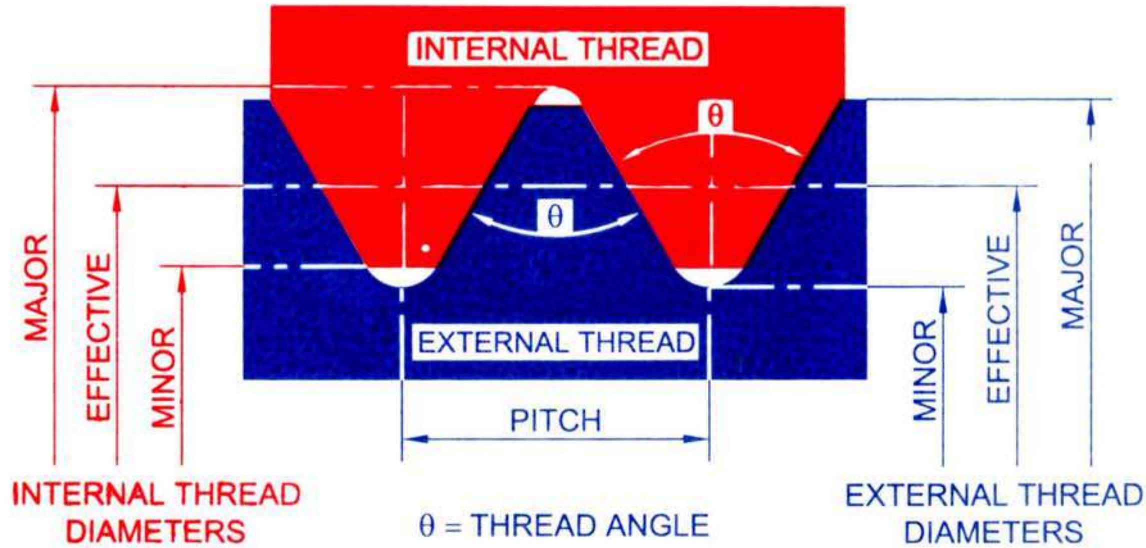

SCREW PITCH GAUGE

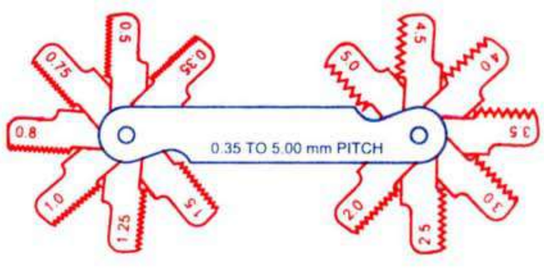

SCREW THREAD CALIPER GAUGE

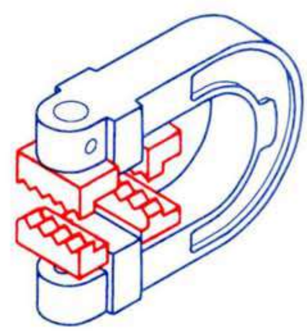

SCREW THREAD PLUG GAUGE

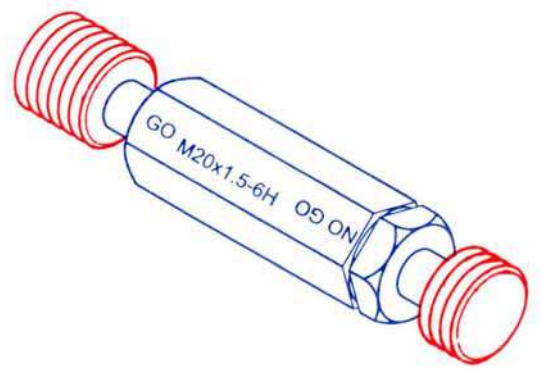

SCREW THREAD RING GAUGE

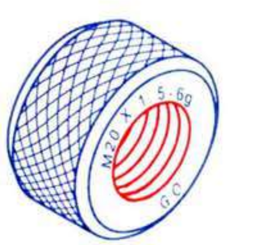

MEASUREMENT OF SCREW THREAD ELEMENTS - II

SCREW THREAD MICROMETER

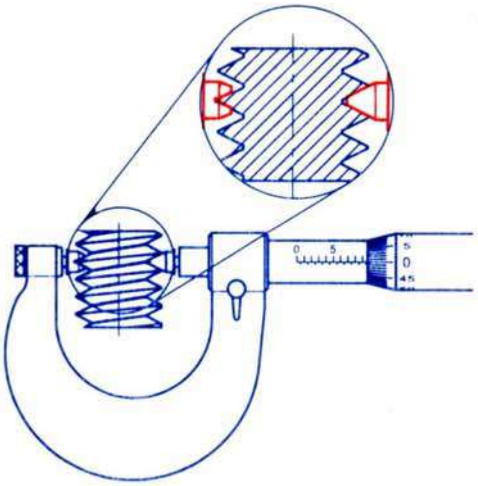

THREE WIRE METHOD

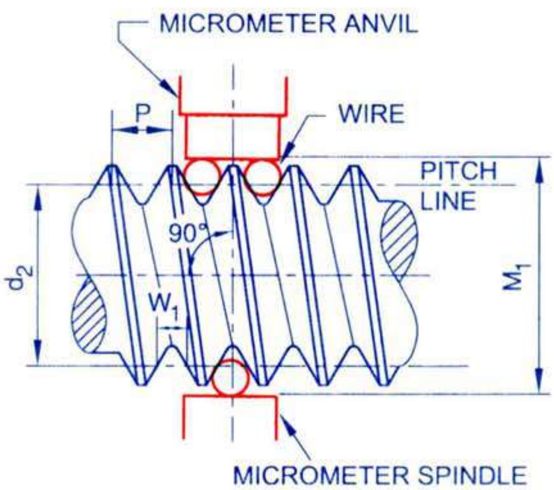

VERNIER CALIPER

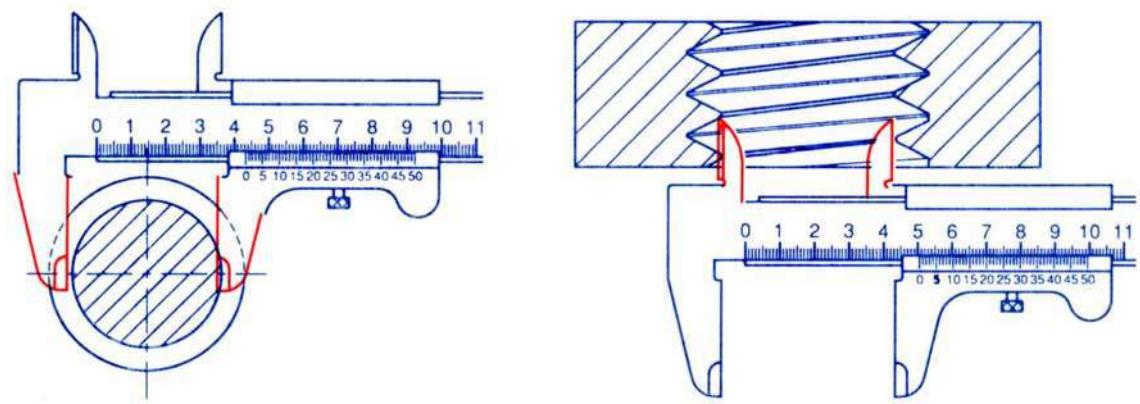

OUTSIDE MICROMETER AND VEE PRISM

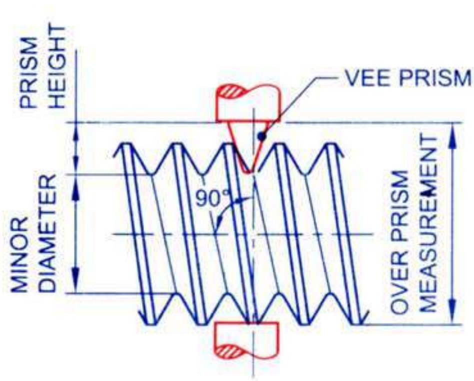

SPECIAL MICROMETER

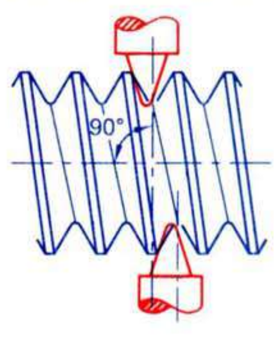

TYPES OF SCREW THREAD

SQUARE THREAD

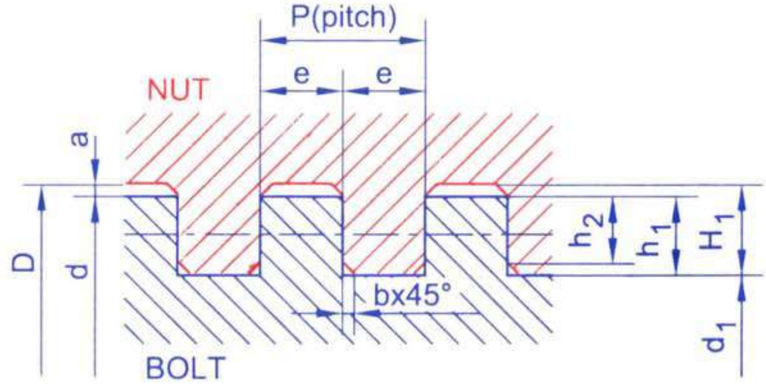

BRITISH ACME THREAD

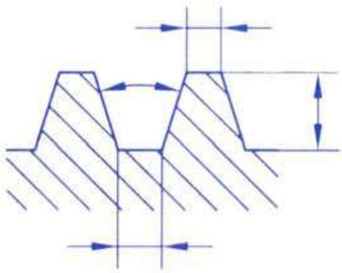

WORM THREAD

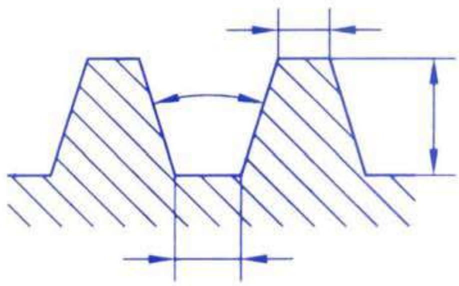

BUTRESS THREAD

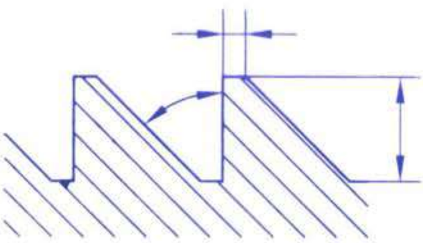

MODIFIED BUTRESS THREAD

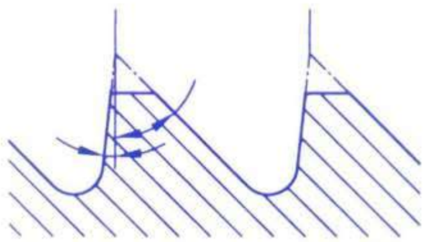

METRIC ACME THREAD

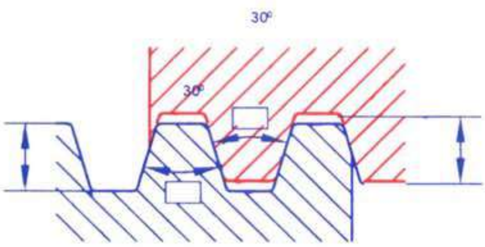

KNUCLE THREAD

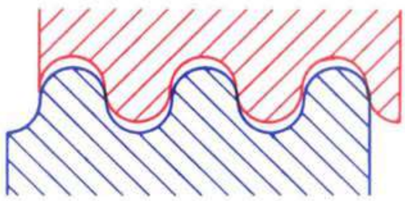

CIMI CENTRAL INSTRUCTIONAL MEDIA INSTITUTE, CHENNAI
INDO - GERMAN PROJECT

TR 01 03 38 16 02

MOVEMENTS & RESTRAINTS OF WORK - I

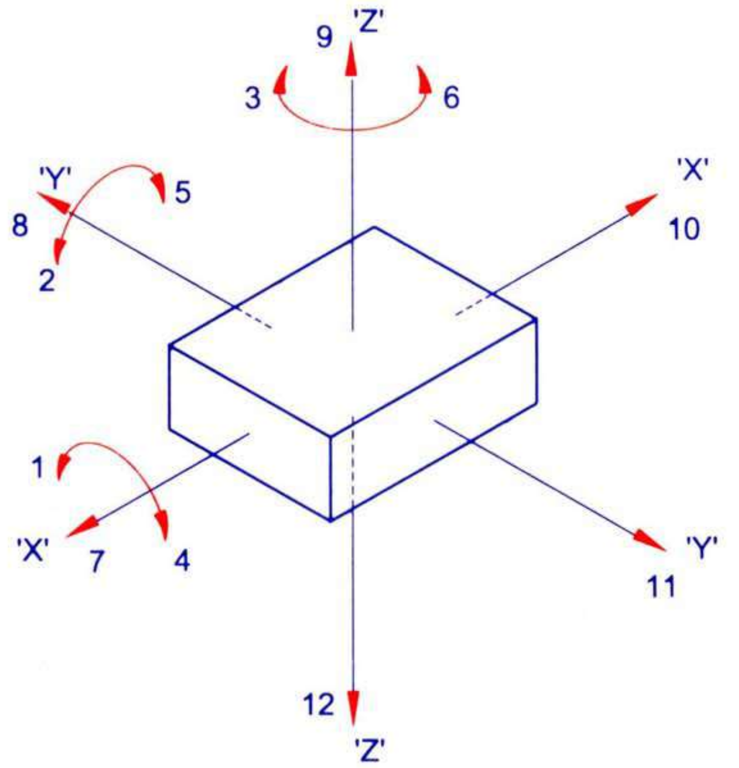

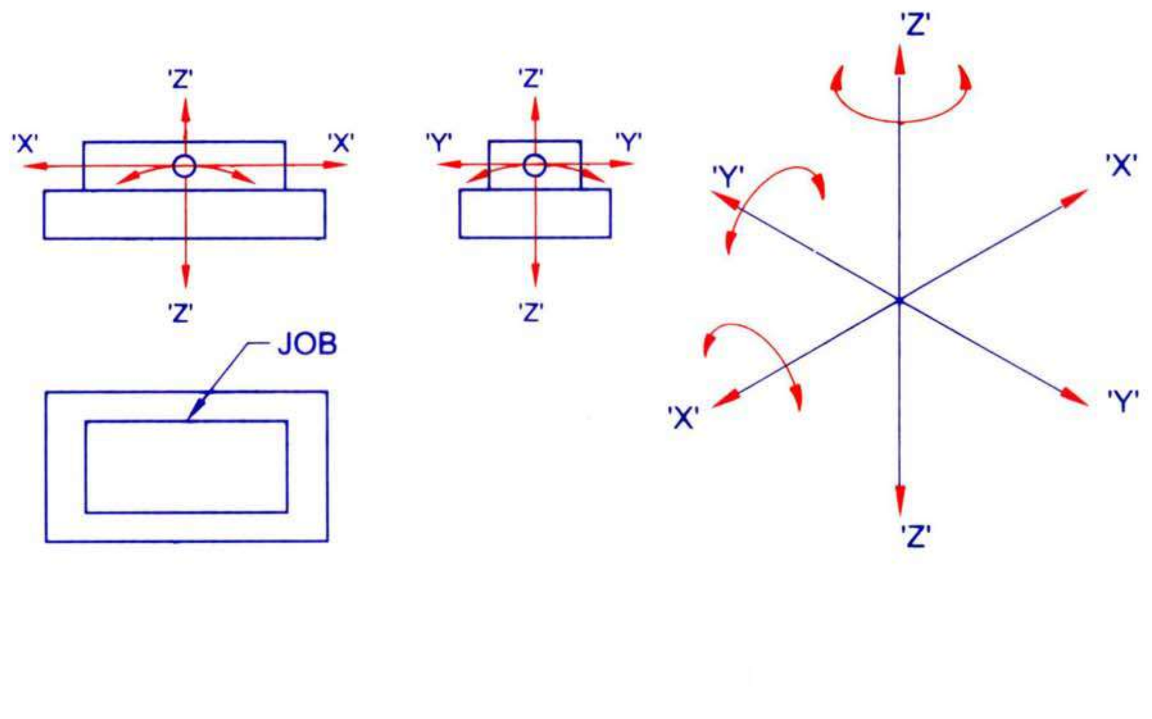

MOVEMENTS & RESTRAINTS OF WORK - II

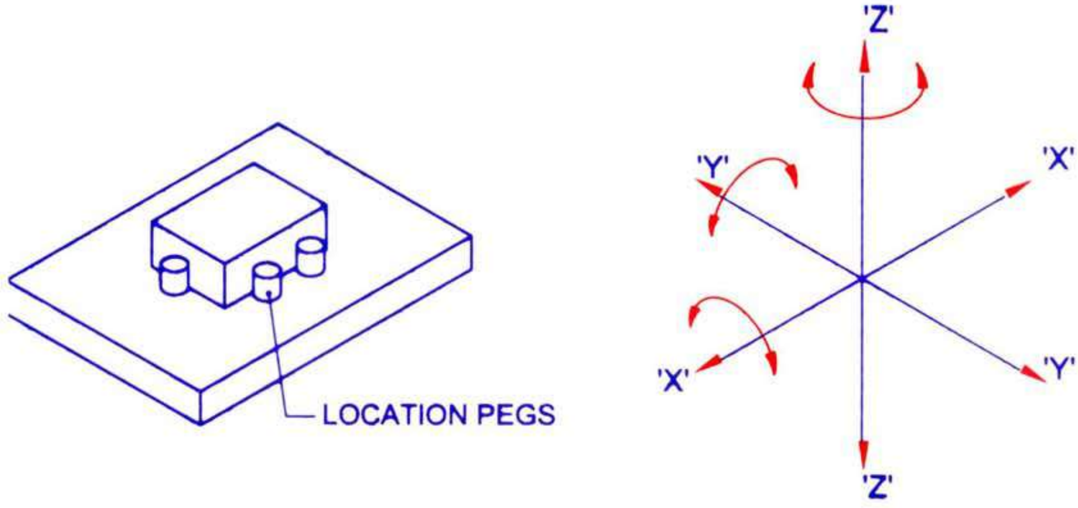

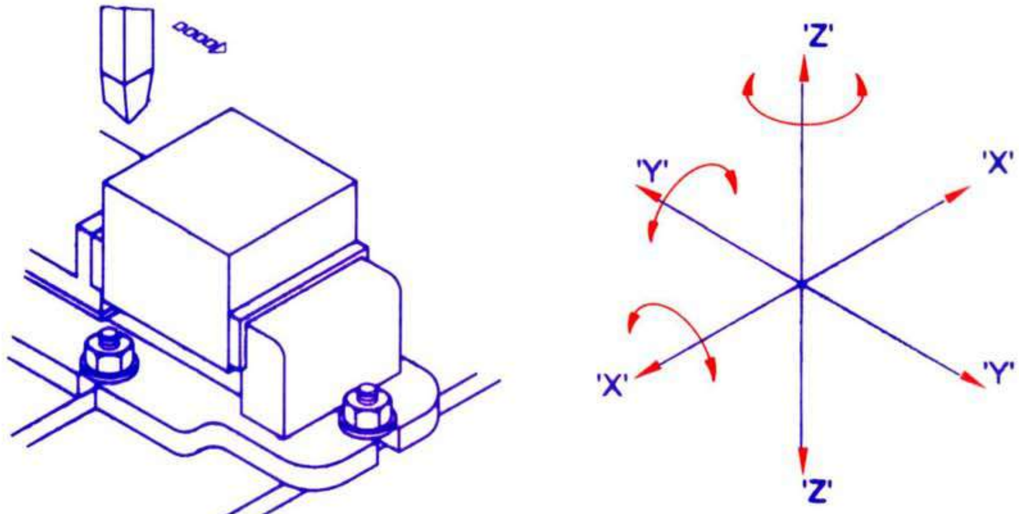

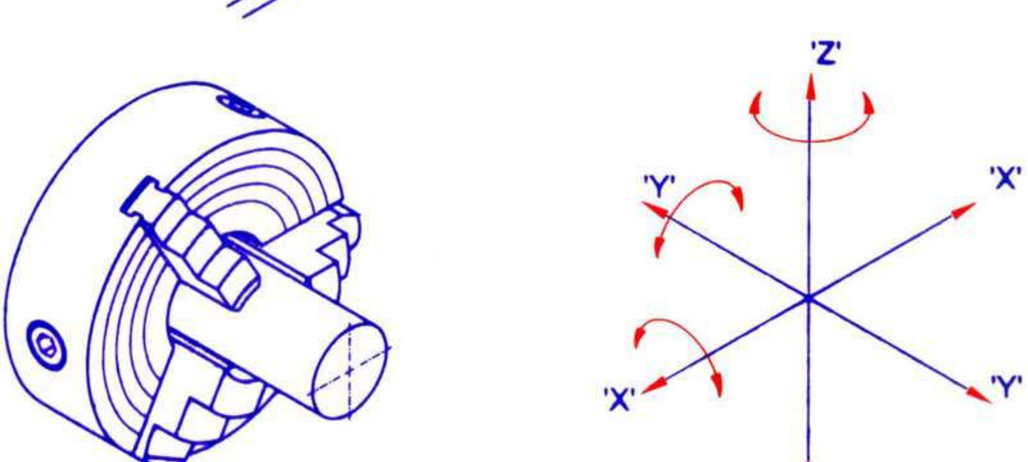

CIMI CENTRAL INSTRUCTIONAL MEDIA INSTITUTE, CHENNAI
INDO GERMAN PROJECT

gtz

TR 01 04 03 18 02

METHODS OF APPLYING LUBRICANT

GRAVITY FEED METHOD

WICK FEED LUBRICATOR

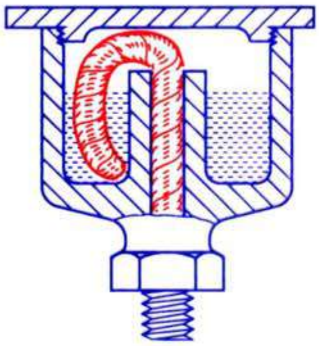

OIL CUP

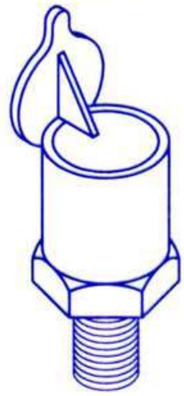

FORCE FEED METHOD

OIL CAN

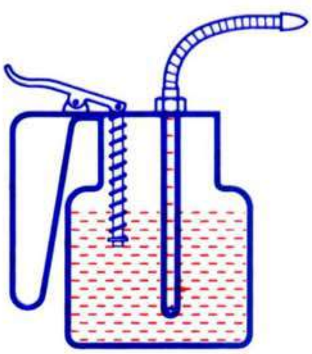

GREASE GUN

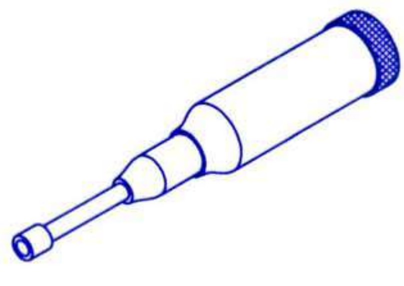

SPLASH METHOD

RING OILING

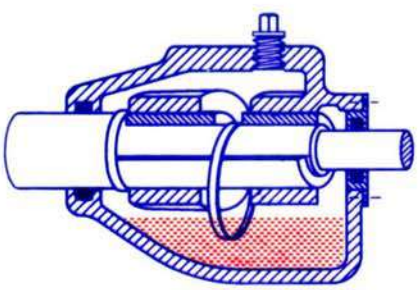

WORM - GEAR BATH OILER

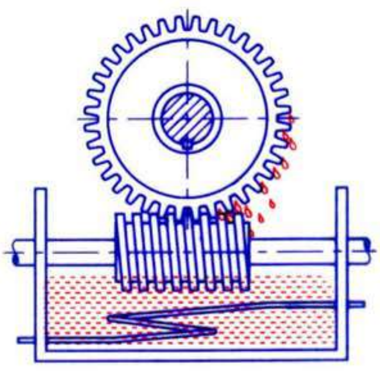

CENTRAL INSTRUCTIONAL MEDIA INSTITUTE, CHENNAI
INDO - GERMAN PROJECT

TR 01 05 01 19 02

VERTICAL MILLING MACHINE

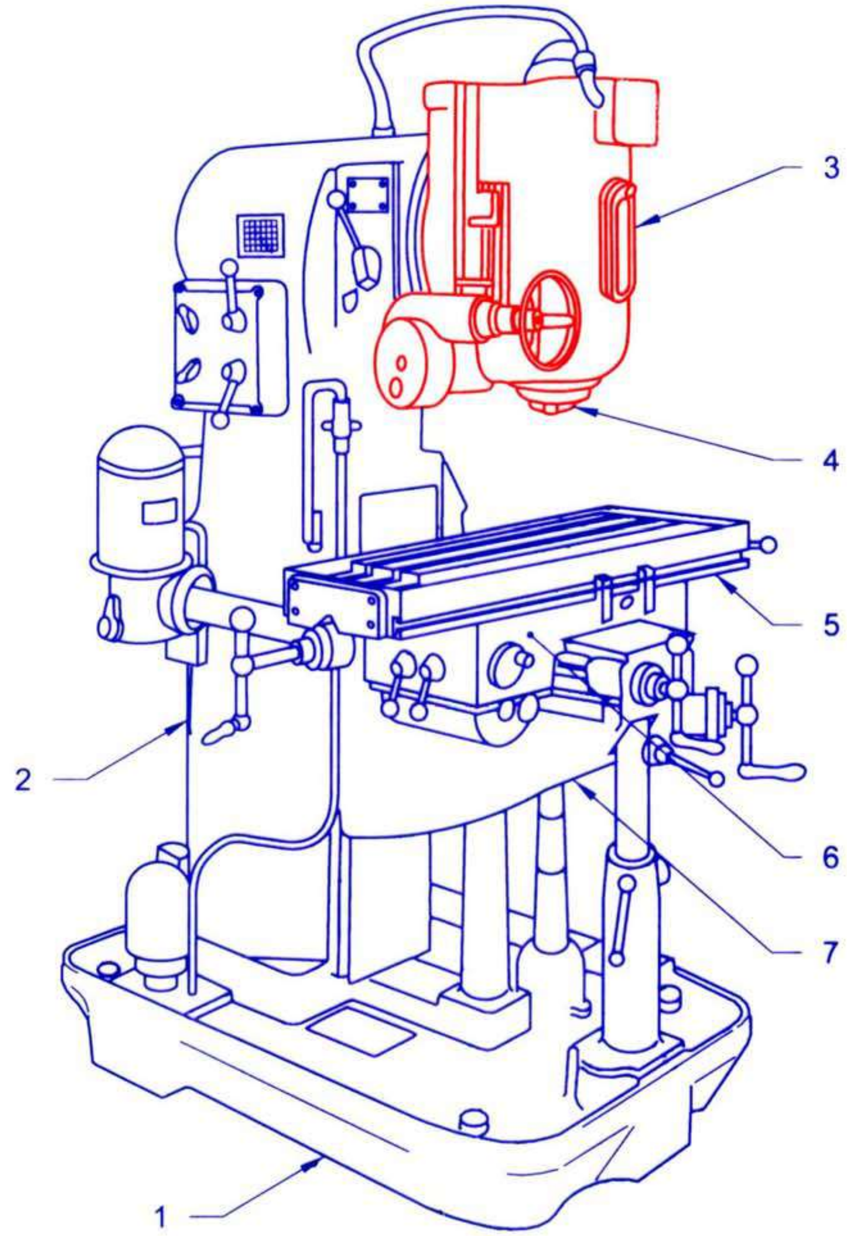

CENTRAL INSTRUCTIONAL MEDIA INSTITUTE, CHENNAI
INDO - GERMAN PROJECT

TR 01 05 12 20 02

DIFFERENTIAL INDEXING - I

COMBINED MOTION OF INDEX PLATE AND CRANK

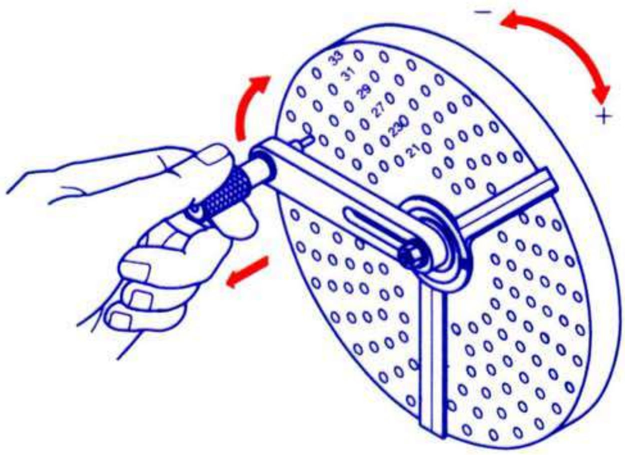

BY GEAR TRAIN

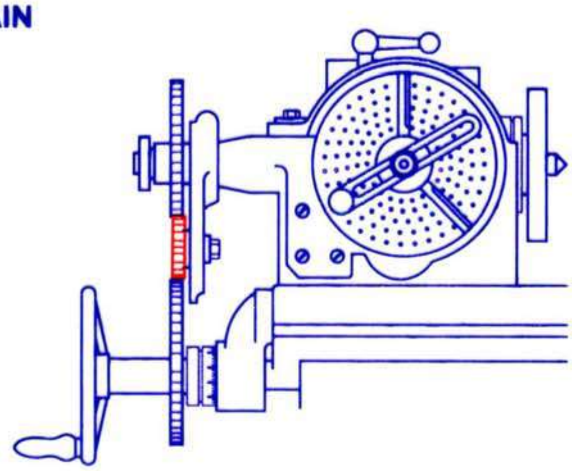

INDEX PLATE ROTATION

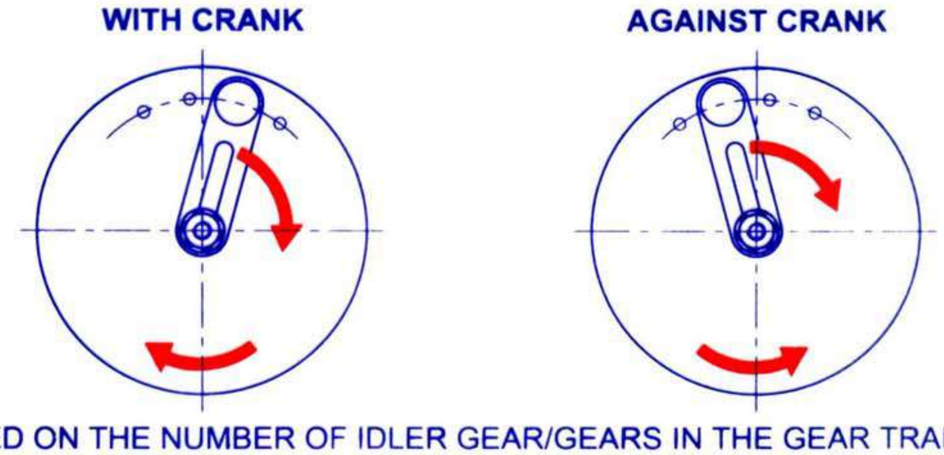

BASED ON THE NUMBER OF IDLER GEAR/GEARS IN THE GEAR TRAIN

CENTRAL INSTRUCTIONAL MEDIA INSTITUTE, CHENNAI
INDO - GERMAN PROJECT

TR 01 05 13 21 02

DIFFERENTIAL INDEXING - II

REQUIRED NUMBER (N) OF DIVISIONS TO BE INDEXED IS 57.

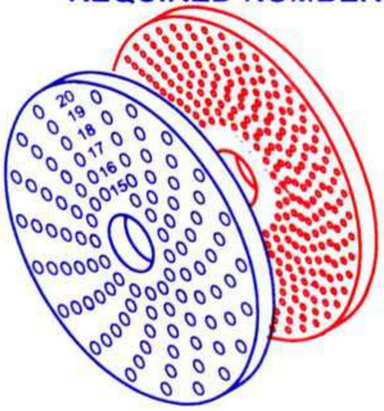

PROCEDURE:

- **SELECT ASSUMED NUMBER OF DIVISIONS (A)**
- **SELECT INDEX PLATE AND SPACING FOR THE ASSUMED NUMBER**
  - **USE SIMPLE INDEXING.**

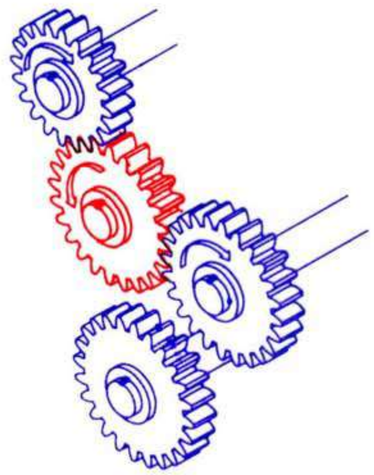

- **SELECT DRIVER AND DRIVEN GEARS**
- **DESIDE THE DIRECTION OF ROTATION OF INDEX PLATE.**
- **ACCORDING TO THE ROTATION OF INDEX PLATE ENGAGE/CONNECT IDLER GEAR/ GEARS.**

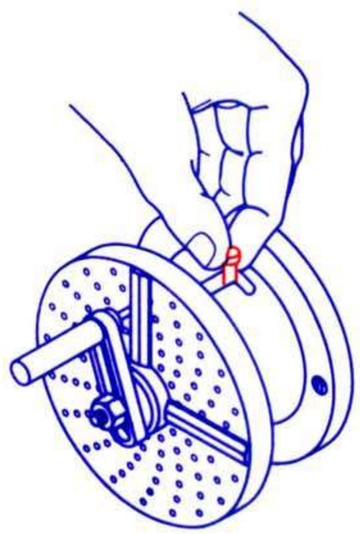

PRIOR TO INDEXING DISENGAGE THE BACK STOP PIN TO PERMIT THE ROTATING OF THE INDEX PLATE

CENTRAL INSTRUCTIONAL MEDIA INSTITUTE, CHENNAI
INDO GERMAN PROJECT

TR 01 05 15 22 02

ELEMENTS OF A STRAIGHT BEVEL GEAR

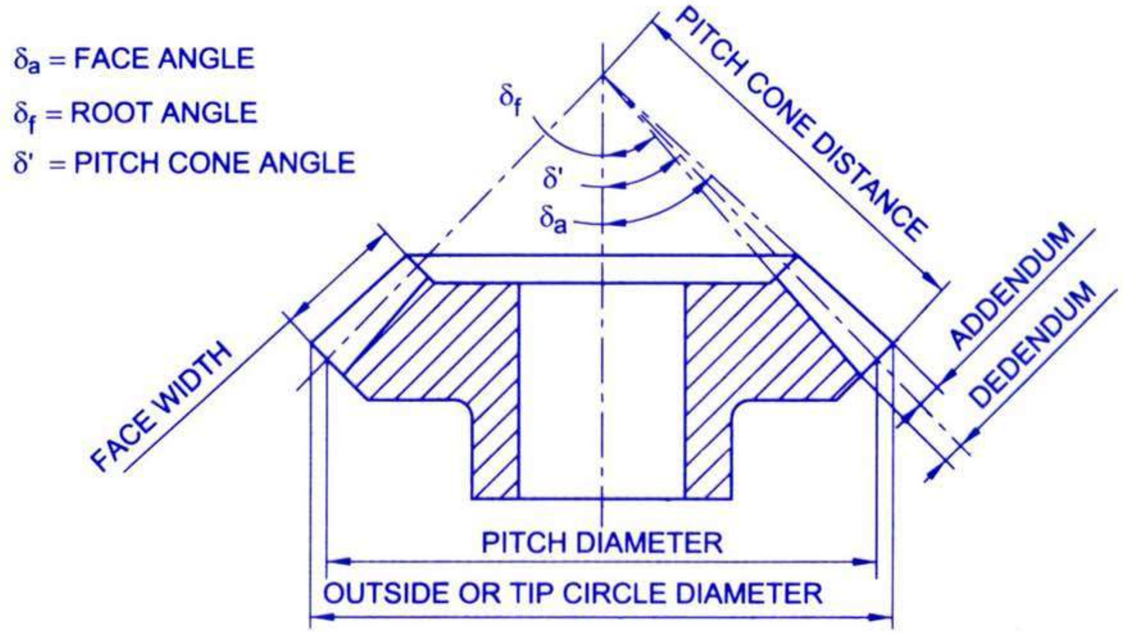

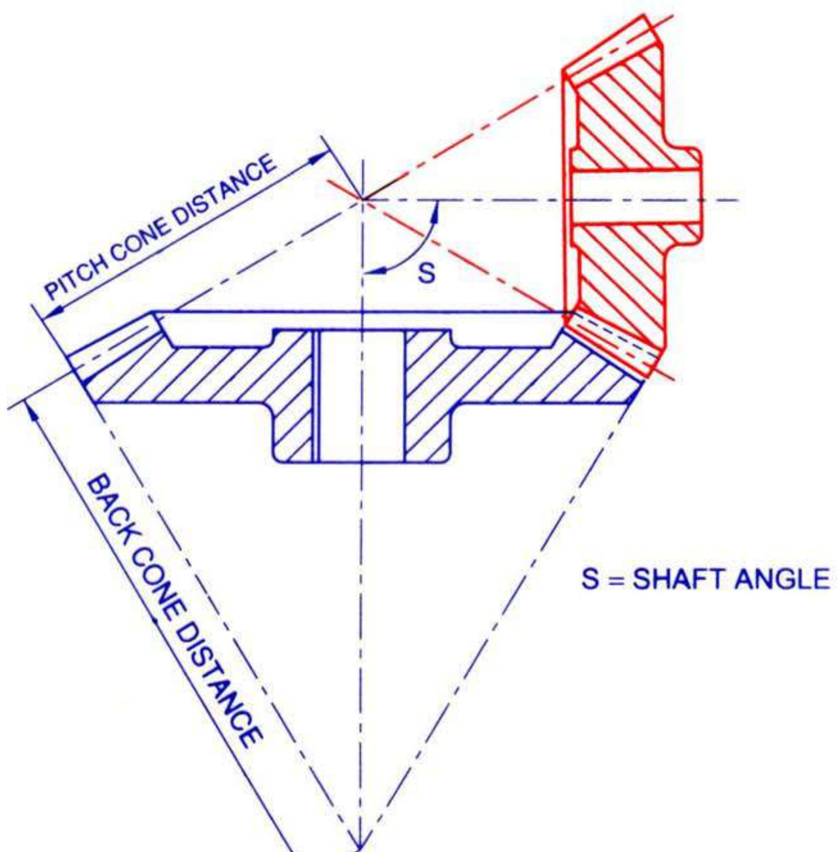

CIMI CENTRAL INSTRUCTIONAL MEDIA INSTITUTE, CHENNAI
INDO - GERMAN PROJECT
gtz

TR 01 05 26 23 02

SURFACE TEXTURE MEASUREMENT

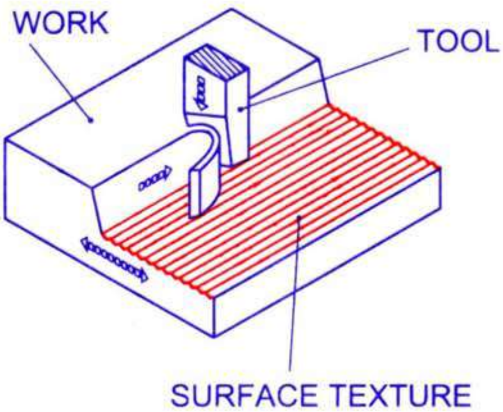

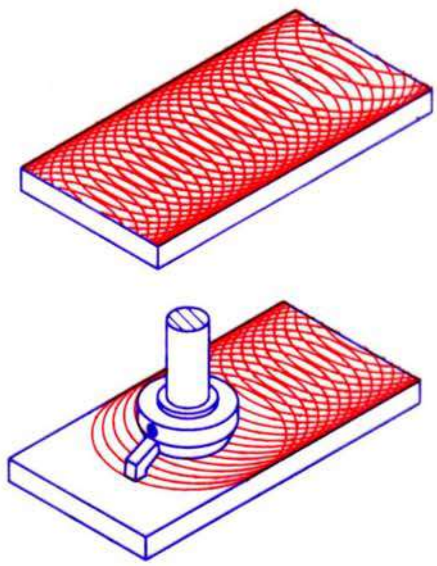

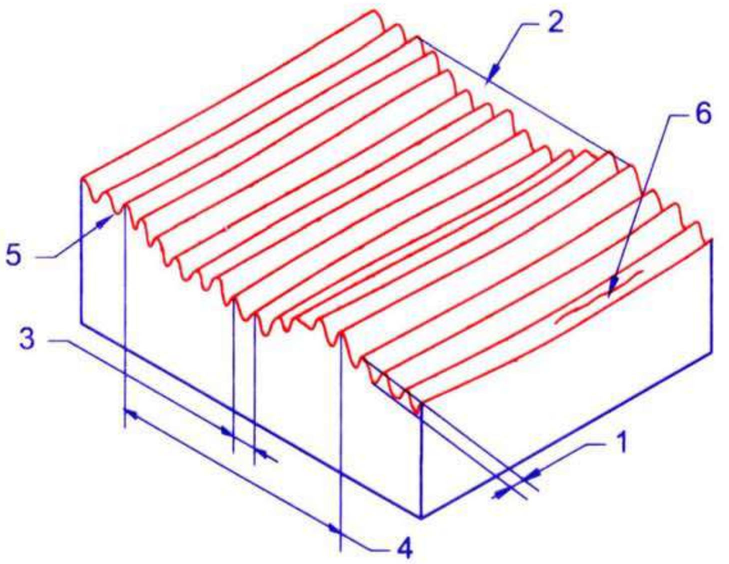

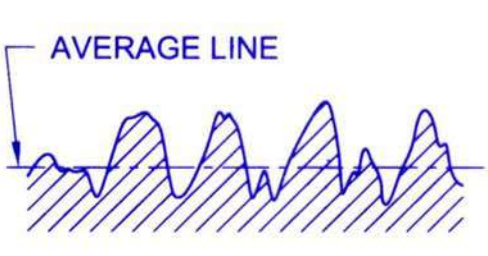

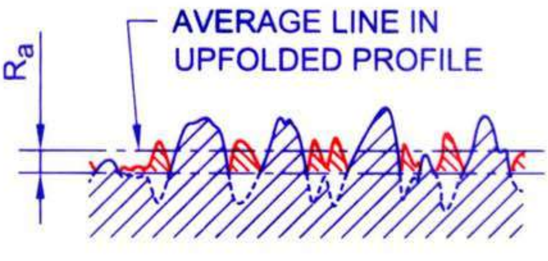

CENTRAL INSTRUCTIONAL MEDIA INSTITUTE, CHENNAI
INDO - GERMAN PROJECT

TR 01 05 26 24 02

METHODS OF INDICATING SURFACE ROUGHNESS

METHODS OF INDICATING SURFACE ROUGHNESS MA2C10L1

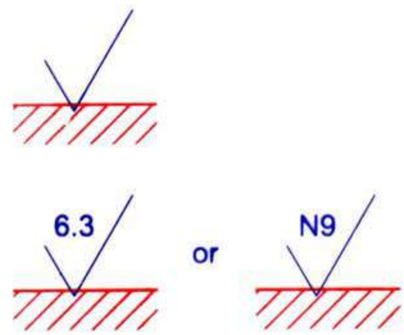

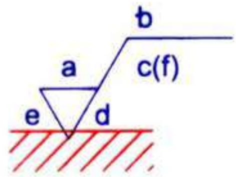

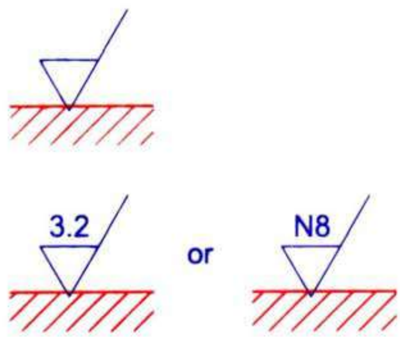

1A

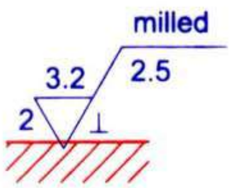

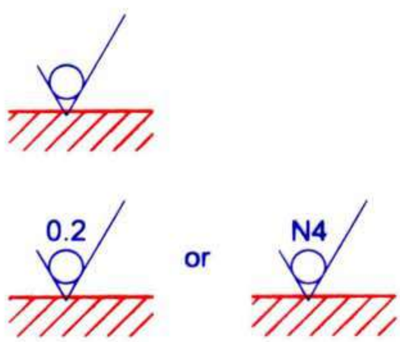

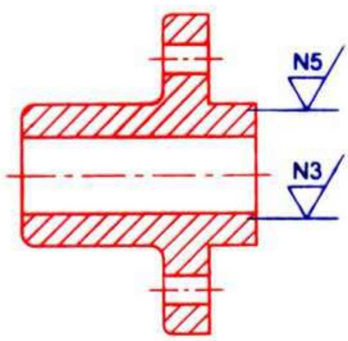

CENTRAL INSTRUCTIONAL MEDIA INSTITUTE, CHENNAI
INDO - GERMAN PROJECT

TR 01 05 29 25 02

WORM AND WORM WHEEL

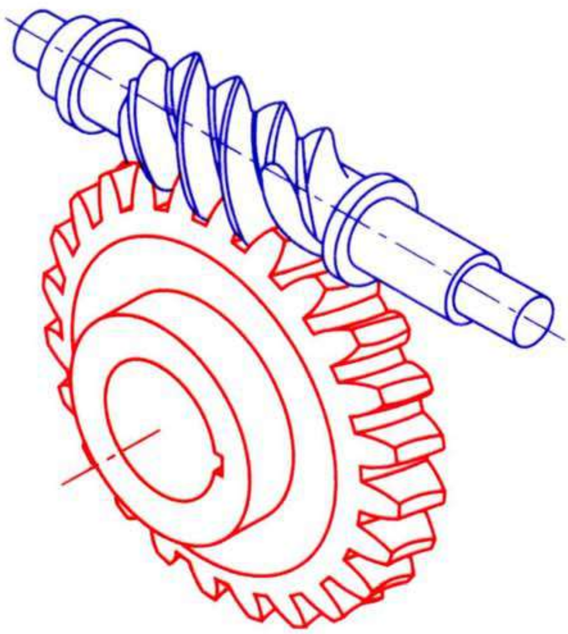

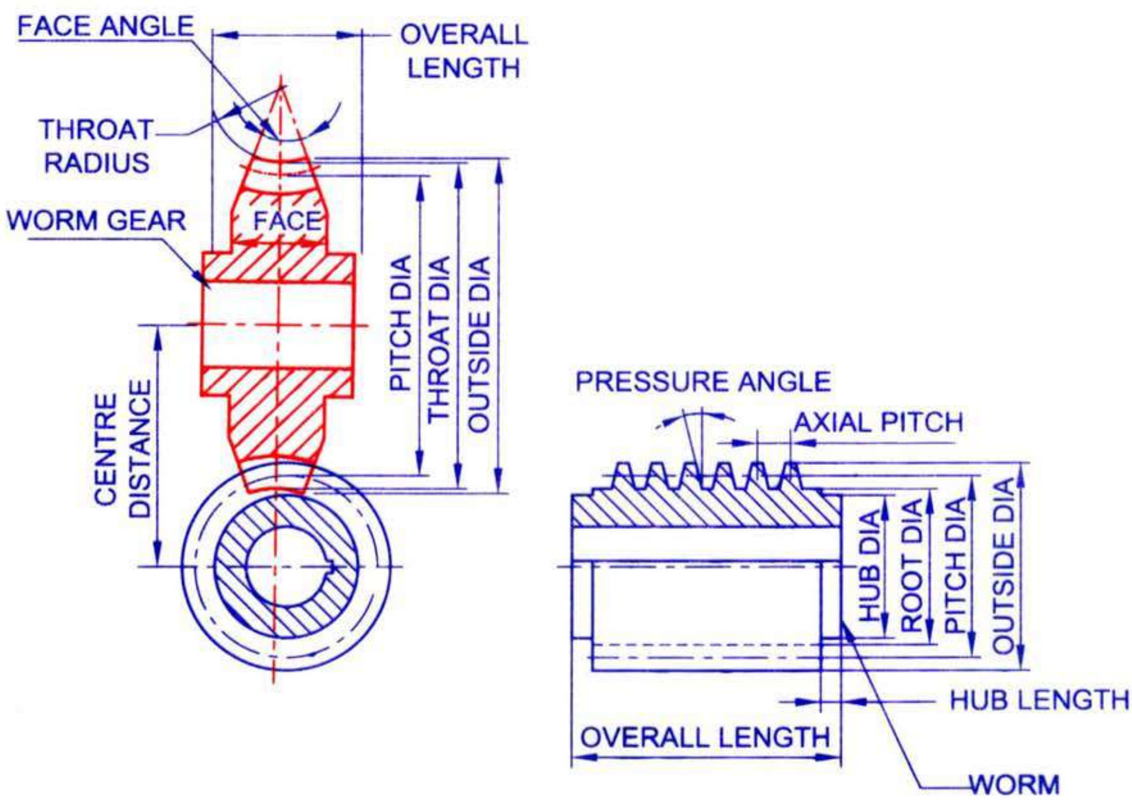

MACHINIST
1st YEAR
TRANSPARENCIES

Directorate General of
Employment and Training
Ministry of Labour, Govt. of India.

Deutsche Gesellschaft für Technische
Zusammenarbeit (GTZ), GmbH
German Technical Co-operation

CIMI CENTRAL INSTRUCTIONAL
MEDIA INSTITUTE, CHENNAI
INDO - GERMAN PROJECT

Developed by

CENTRAL INSTRUCTIONAL MEDIA INSTITUTE

P.O. Box. 3142, 76, GST Road, Guindy, Chennai - 600 032.Phone : 234 5256, 234 5257. Fax : (0091-44) 234 2791

VERNIER CALIPER PARTS AND PRINCIPLE

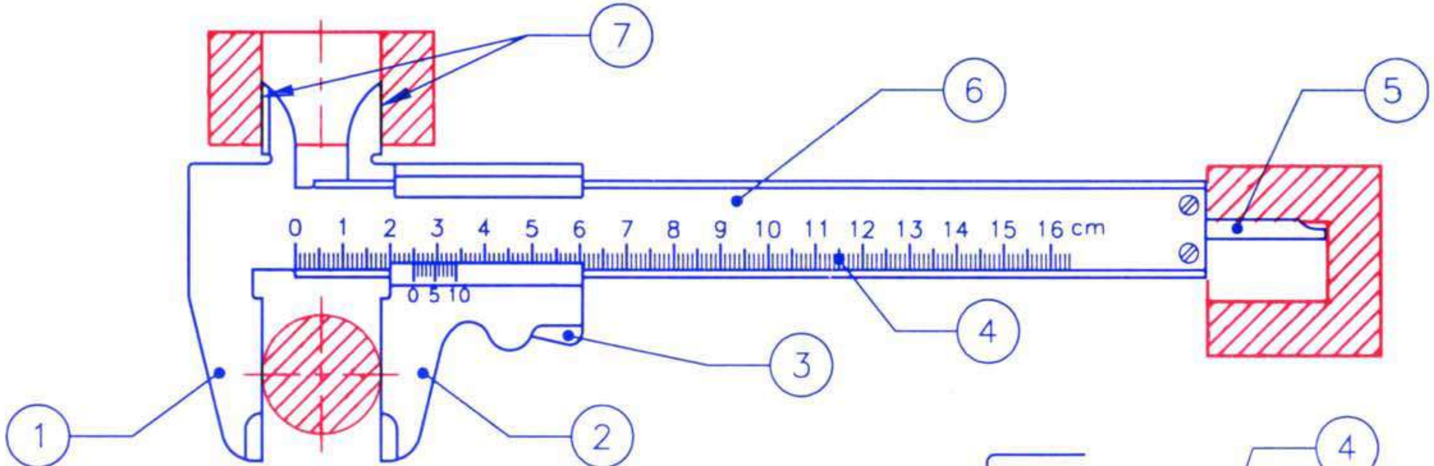

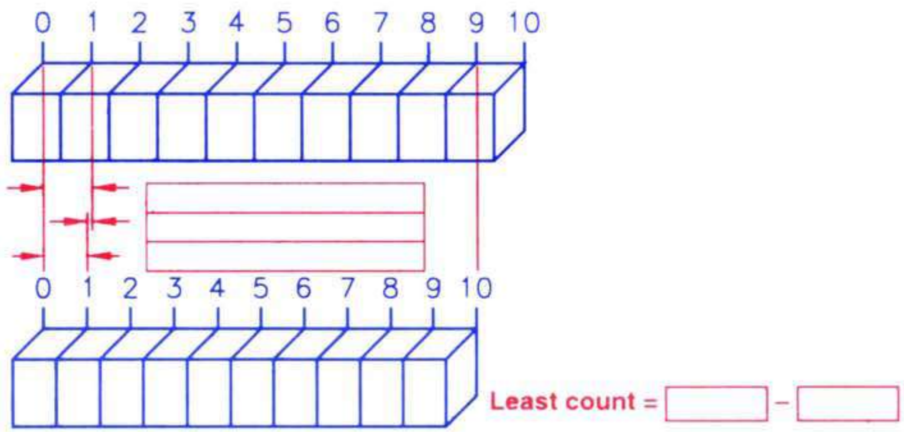

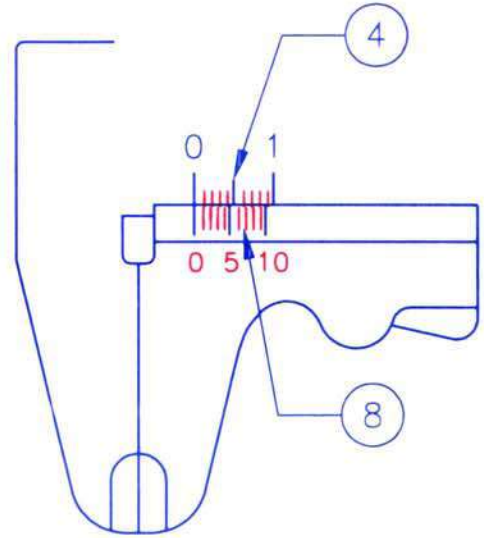

CENTRAL INSTRUCTIONAL MEDIA INSTITUTE, CHENNAI
INDO - GERMAN PROJECT

TR 01 02 01 01 98

CIMI CENTRAL INSTRUCTIONAL MEDIA INSTITUTE, CHENNAI
INDO - GERMAN PROJECT

READING OF VERNIER CALIPER

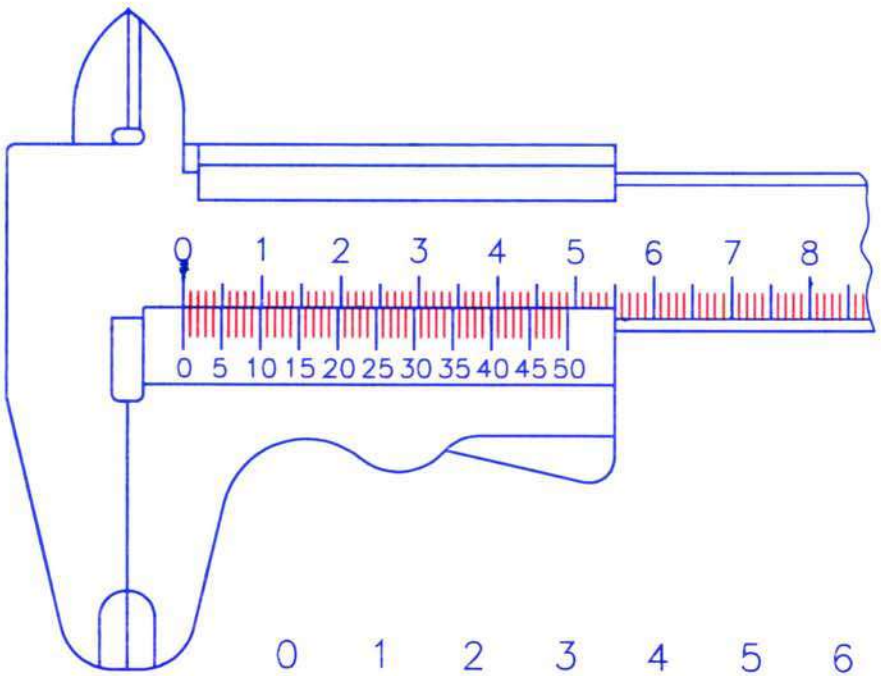

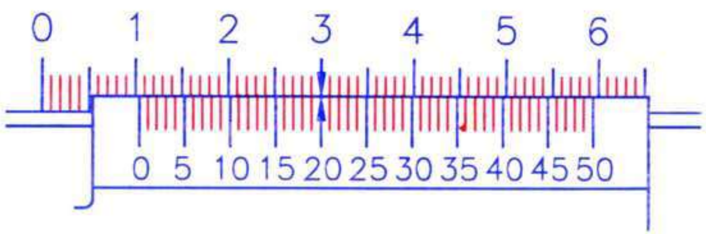

49 Main scale divisions are divided into 50 vernier scale divisions

Value of 1 VSD	=	
Least count	=	1 MSD – 1 VSD
	=	
	=	
Main scale reading	=	
No of VSD coinciding with MSD	=	
Value of coinciding vernier division	=	
Reading	=	. MS Reading + VS Reading
	=	
	=	

TR 01 02 01 02 98

CIMI CENTRAL INSTRUCTIONAL MEDIA INSTITUTE, CHENNAI
INDO GERMAN PROJECT

gtz

TR 01 02 01 03 98

READING OF VERNIER CALIPER (ASSIGNMENTS)

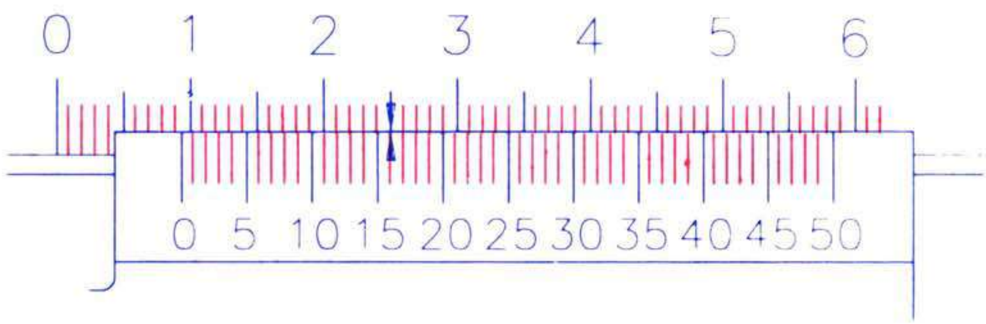

Main scale reading =

Value of coinciding vernier division =

Reading =

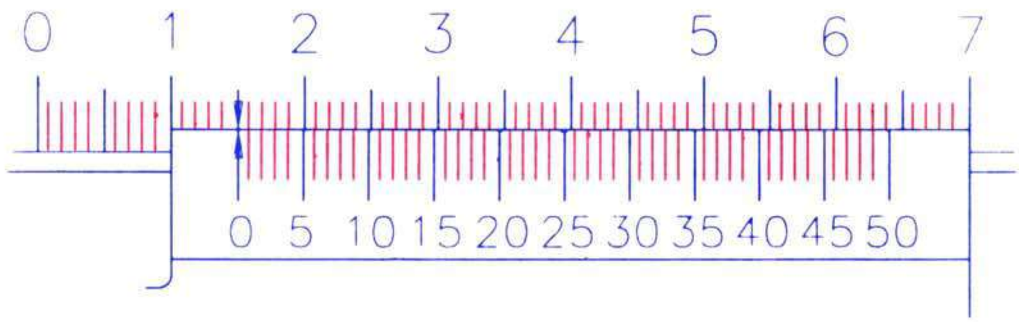

Main scale reading =

Value of coinciding vernier division =

Reading =

CIMI CENTRAL INSTRUCTIONAL MEDIA INSTITUTE, CHENNAI
INDO - GERMAN PROJECT
TR 01 02 02 01 98

MICROMETER PARTS AND GRADUATIONS

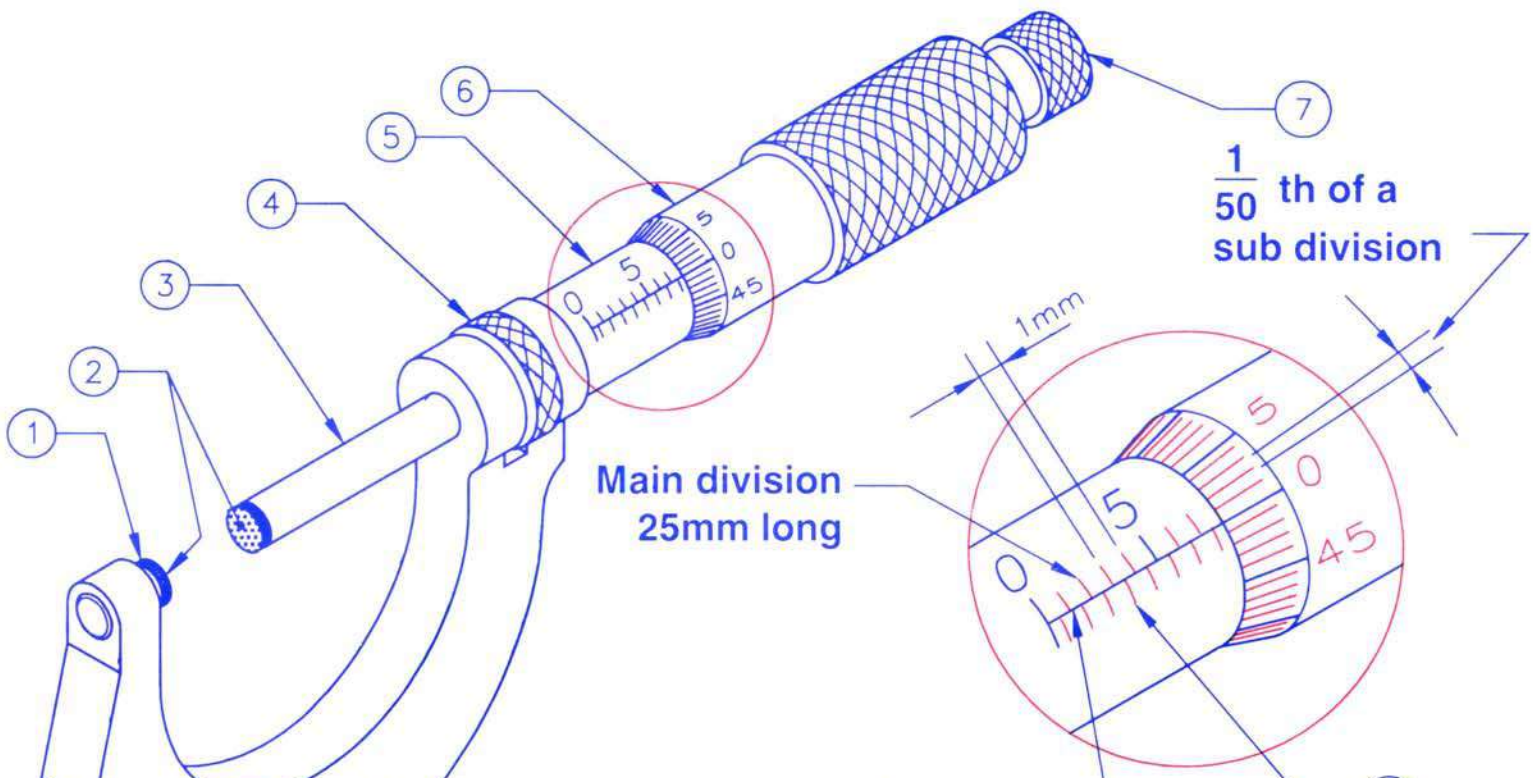

Least count $= \frac{1}{50}$ th of 0.5

$=$ ☐

What is the range of the Micrometer?

CENTRAL INSTRUCTIONAL MEDIA INSTITUTE, CHENNAI
INDO - GERMAN PROJECT

gtz

TR 01 02 02 02 98

READING OF MICROMETER (OUTSIDE)

Main divisions
2 x 1mm = 2.00 mm

Thimble divisions
25 x 0.01mm = 0.25 mm

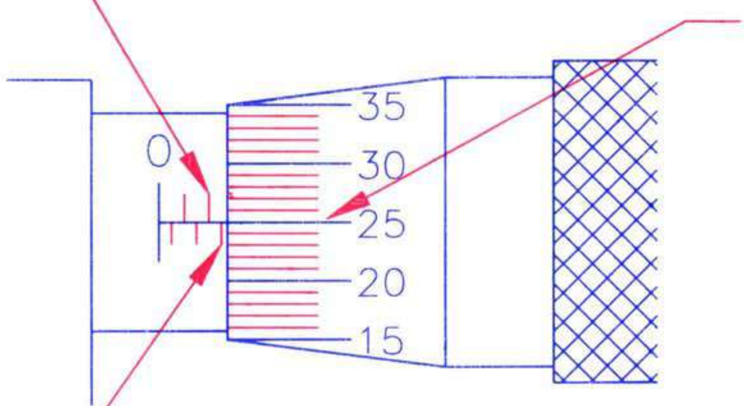

Sub division
1 x 0.5mm = 0.5 mm

Main divisions	=		mm =		mm
Sub division	=		mm =		mm
Thimble divisions	=		mm =		mm
Reading	=				mm

EXAMPLE

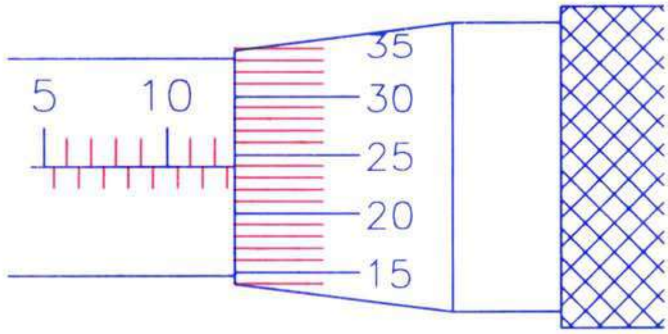

Main divisions	=		mm =		mm
Sub division	=		mm =		mm
Thimble divisions	=		mm =		mm
Reading	=				mm

CIMI CENTRAL INSTRUCTIONAL MEDIA INSTITUTE, CHENNAI
INDO - GERMAN PROJECT
gtz
TR 01 02 03 01 98

VERNIER BEVEL PROTRACTOR PARTS AND PRINCIPLE

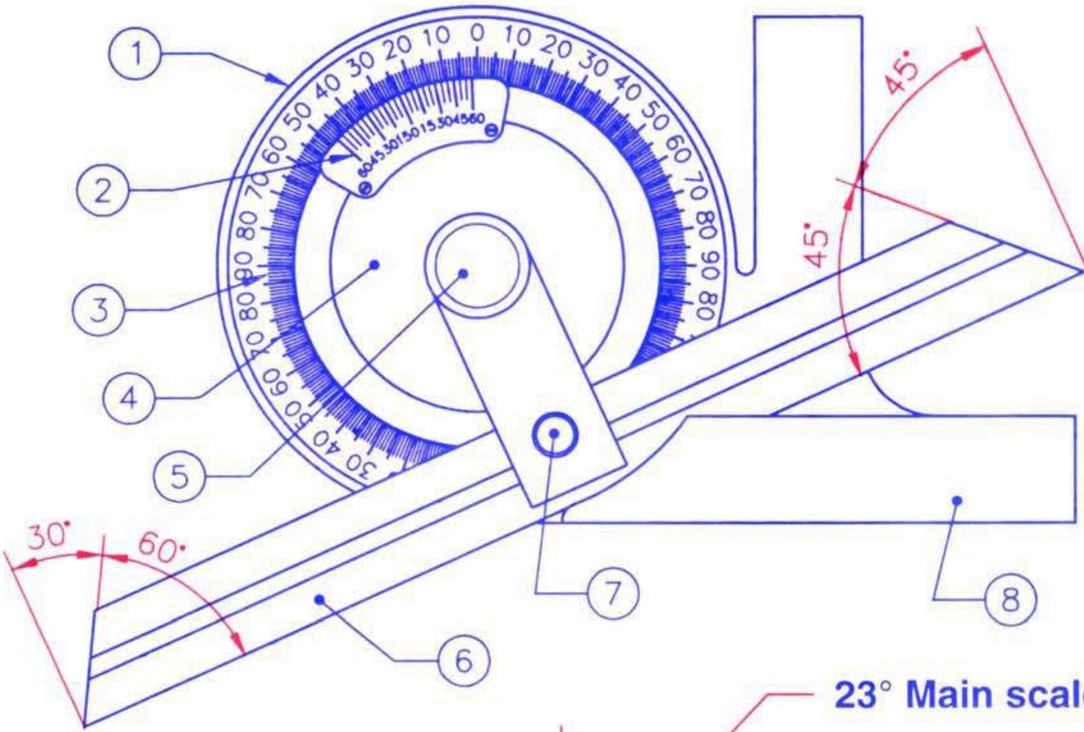

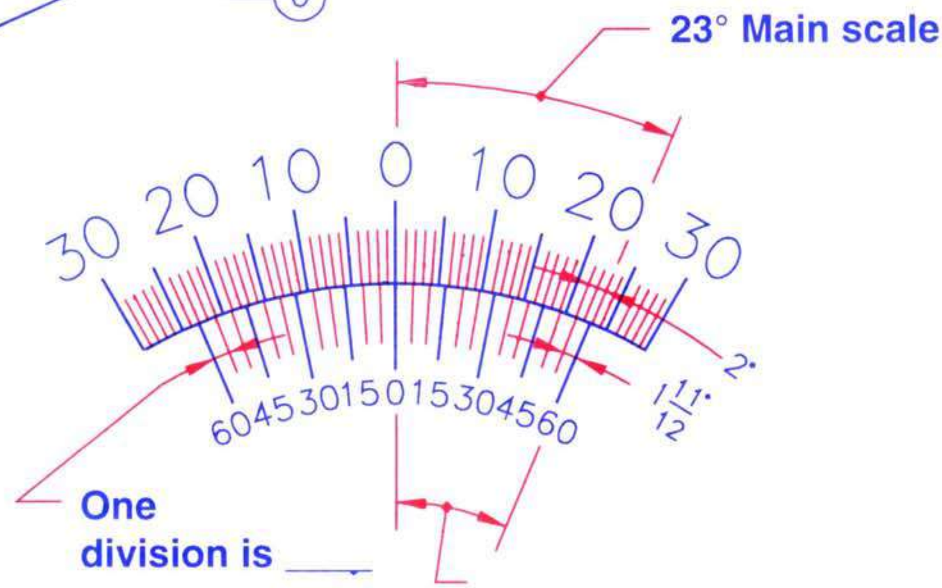

The value of each vernier scale division is =

Least count is =

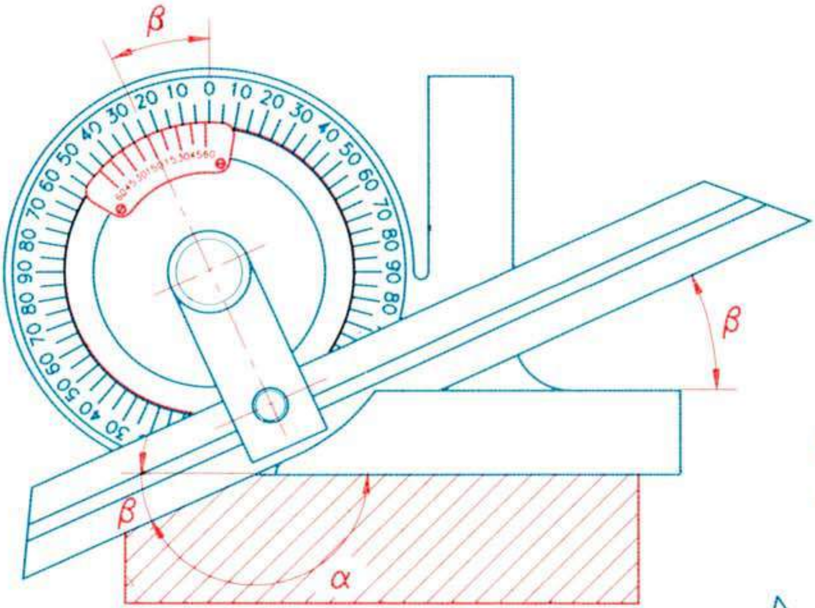

Obtuse angle

$\alpha = 180^{\circ} - \beta$

Assignments:-

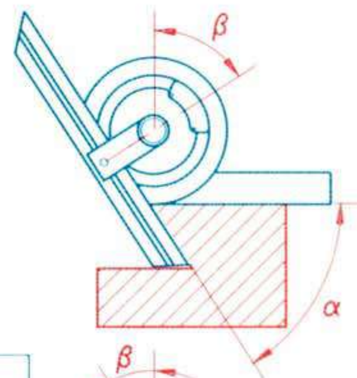

A Reading

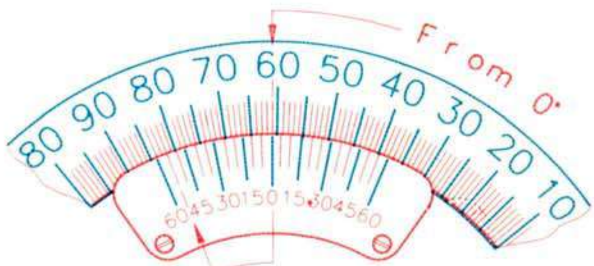

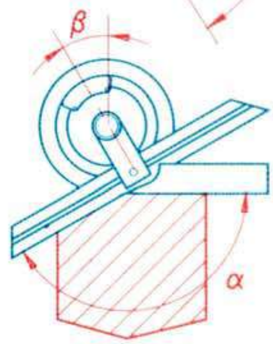

B Reading

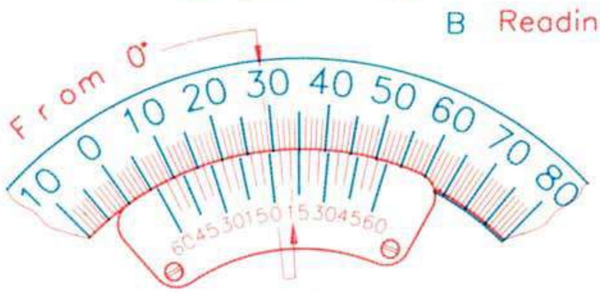

C Reading

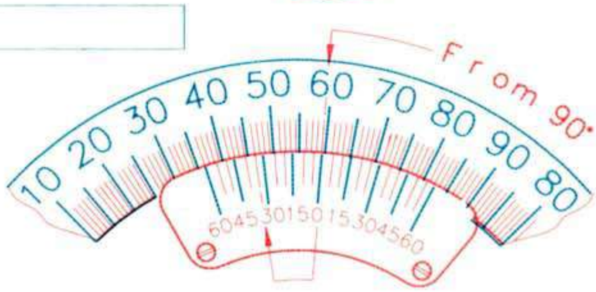

D Reading

BEVEL PROTRACTOR READING	TR 01 02 03 02 93	CIMI CENTRAL INSTRUCTIONAL MEDIA INSTITUTE, MADRAS AN INDO-GERMAN PROJECT

CIMI CENTRAL INSTRUCTIONAL MEDIA INSTITUTE, CHENNAI
INDO GERMAN

TR 01 02 03 03 98

VERNIER BEVEL PROTRACTOR APPLICATIONS

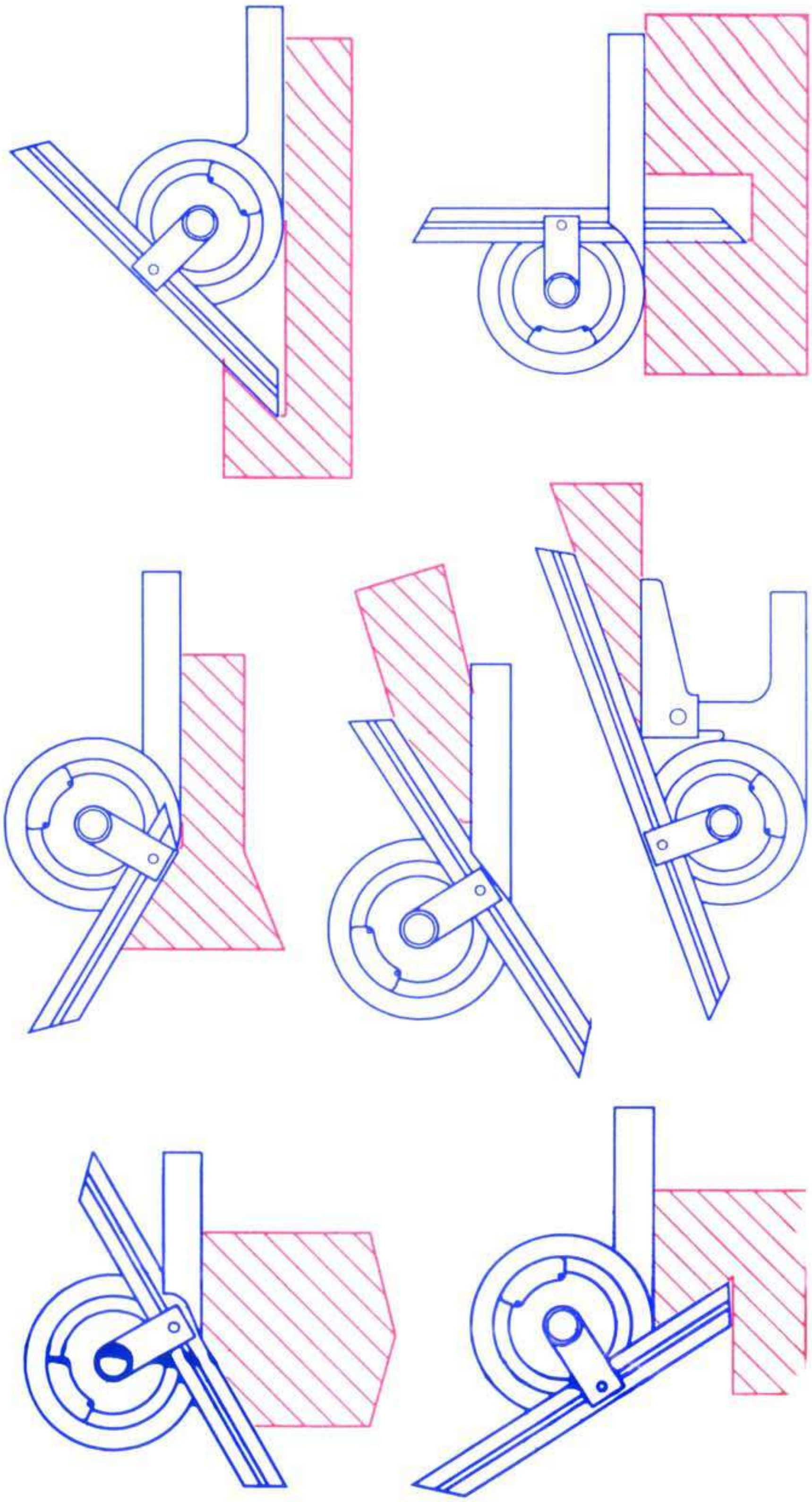

CIMI CENTRAL INSTRUCTIONAL MEDIA INSTITUTE, CHENNAI
INDO - GERMAN PROJECT

TR 01 02 06 01 98

DEPTH MICROMETER PARTS AND READING

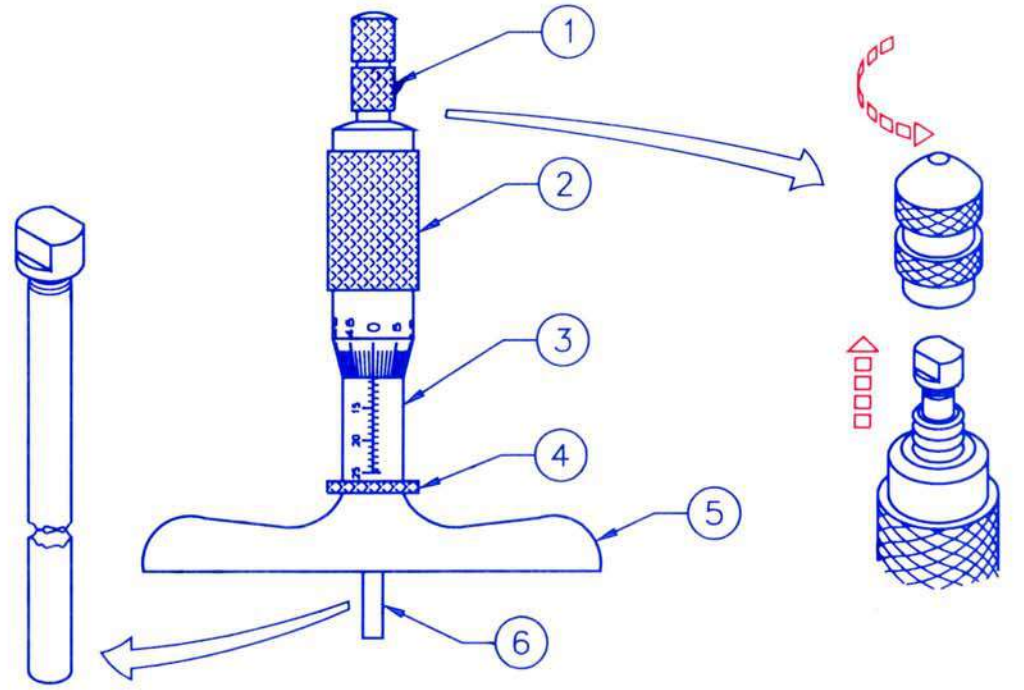

When the extension rod face flushes with the stock?

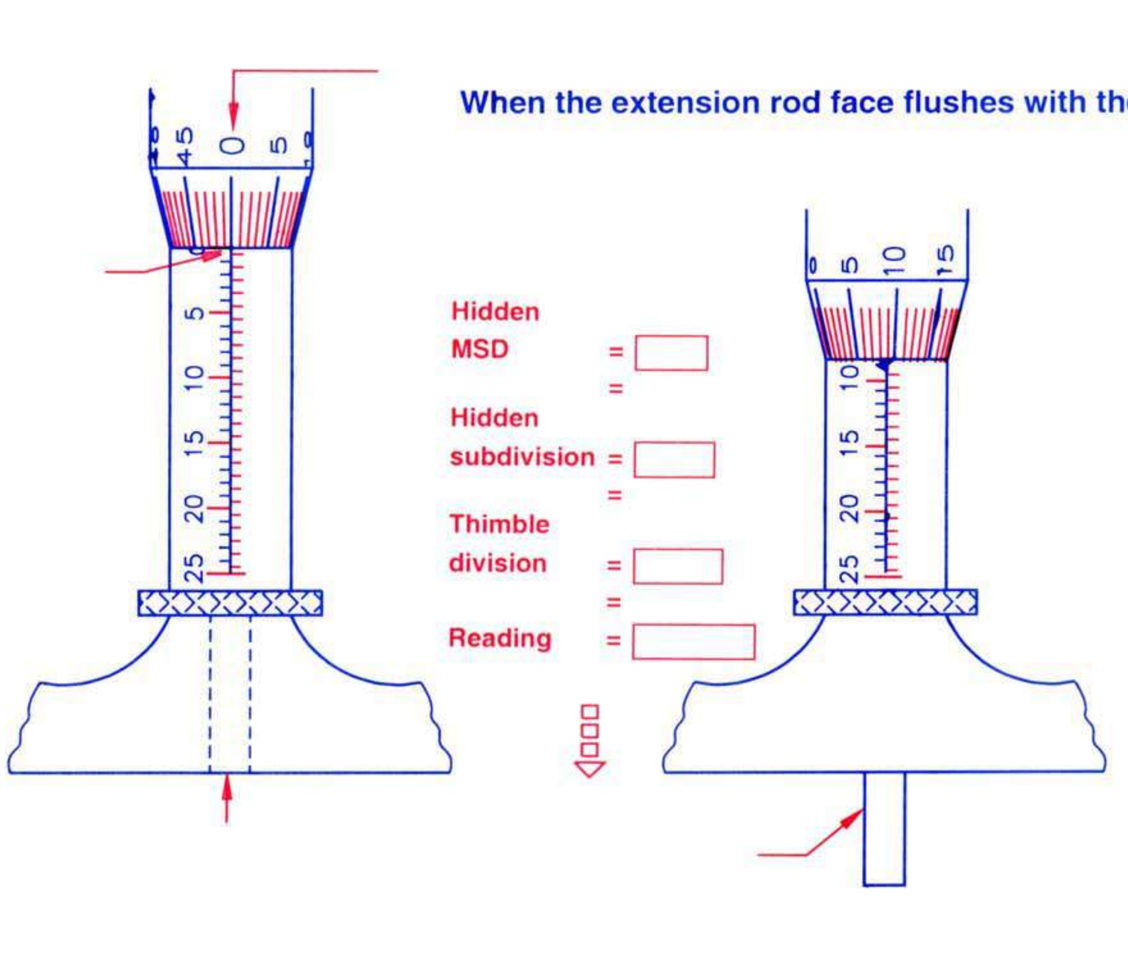

CENTRAL INSTRUCTIONAL MEDIA INSTITUTE, CHENNAI
INDO GERMAN PROJECT

TR 01 05 01 01 98

CUTTING SPEED, R P M AND FEED OF DRILLS

CUTTING SPEED

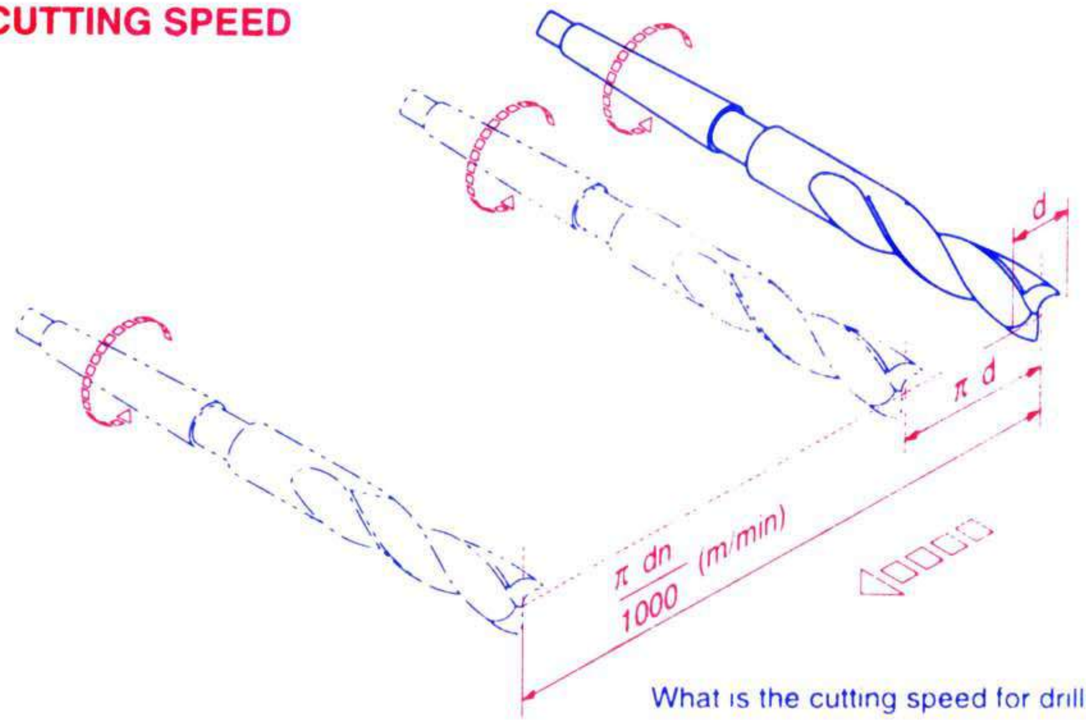

What is the cutting speed for drilling?

SPINDLE SPEED

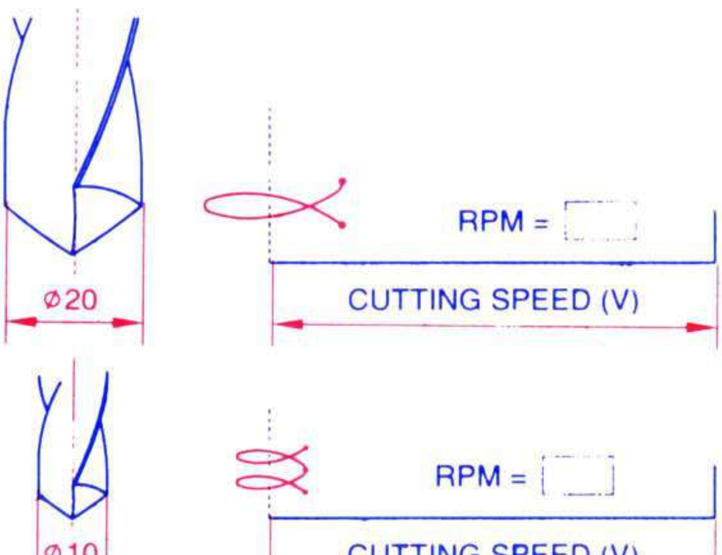

The RPM of the drill depends on the ________ and ________ of the drill.

FEED

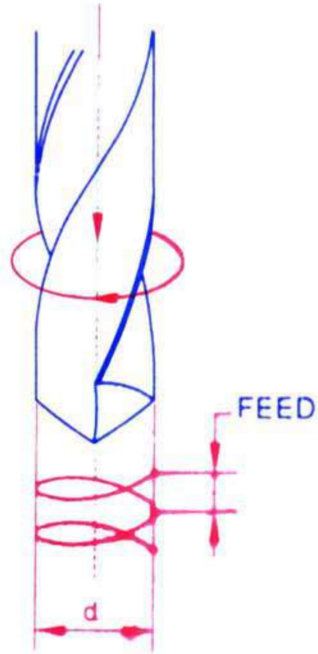

What is the feed in a drilling operation?

CIMI CENTRAL INSTRUCTIONAL MEDIA INSTITUTE, CHENNAI
INDO - GERMAN PROJECT

LIMITS AND FITS - TERMINOLOGY

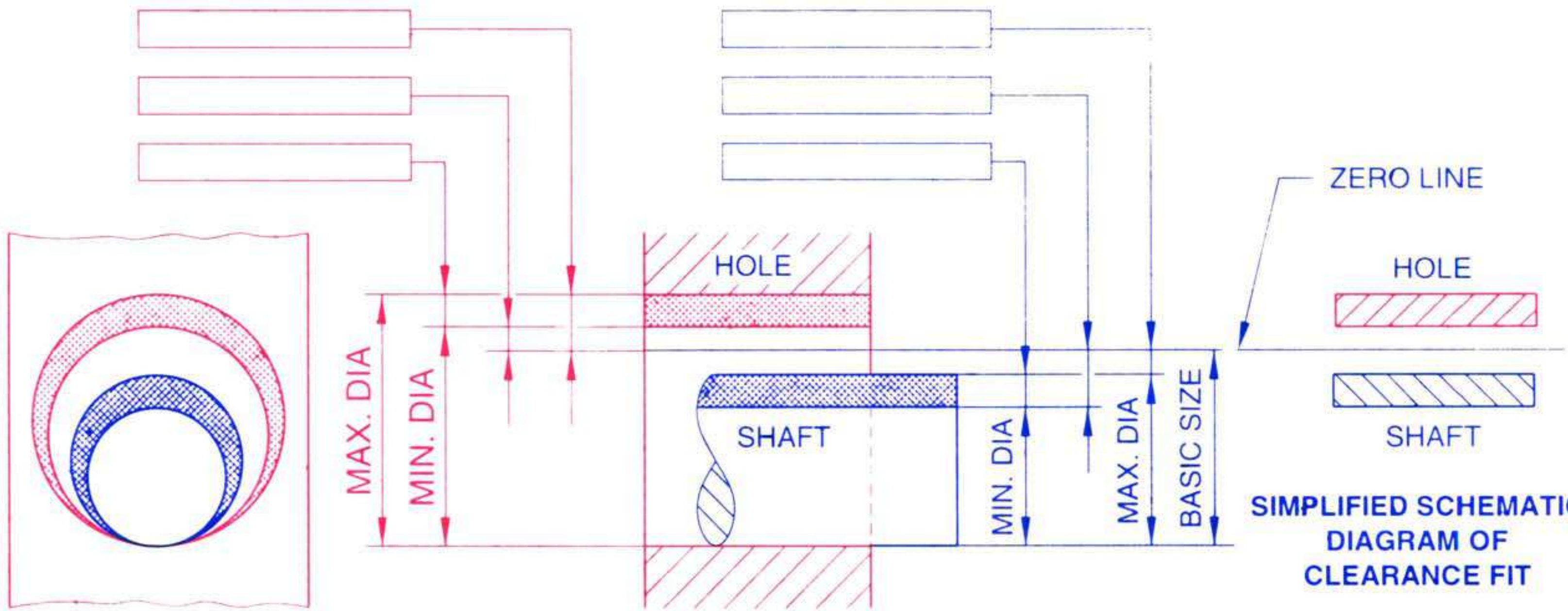

SIMPLIFIED SCHEMATIC DIAGRAM OF CLEARANCE FIT

- The zero line is the line of zero deviation and represents the ________ size.
- The deviation which gives maximum limit of size is called __________ deviation.
- The deviation which gives minimum limit of size is called __________ deviation.
- By convention, when the zero line is drawn horizontally ____________ deviations are shown above and __________ deviations are below it.

TR 01 06 01 01 98

METHOD OF INDICATING SURFACE ROUGHNESS

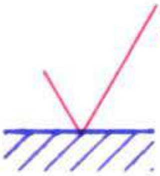

← This is the basic symbcl and has no meaning as it is.

Should be followed by roughness value. →

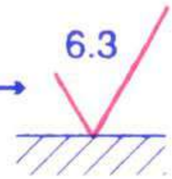

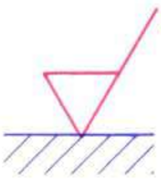

← Removal of material is by machining only.

Should be followed by roughness value. →

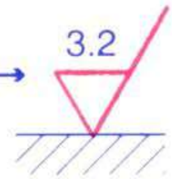

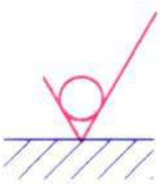

← Removal of material is prohibited.

Roughness value must be obtained without removal of material. →

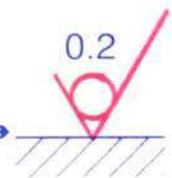

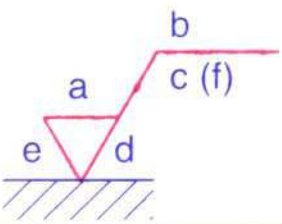

a =
b =
c =
d =
e =
f =

EXAMPLE

all over
except where otherwise stated

OR

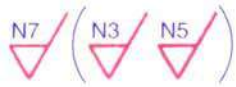

OR

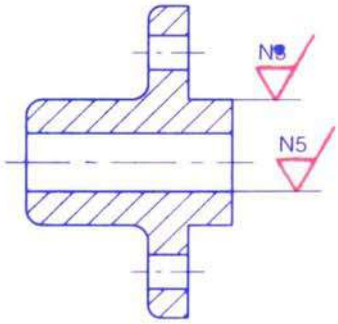

The surface roughness is indicated as follows:

-

or

-

or

-

CLASSES OF FITS

CLEARANCE FIT

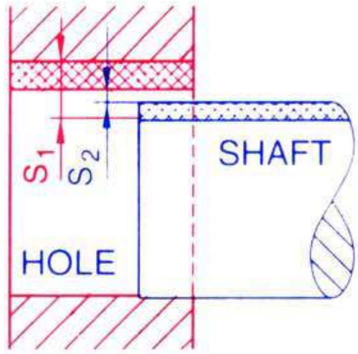

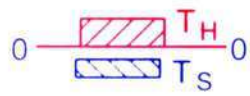

SIMPLIFIED REPRESENTATION

S_1 = ______________________

S = ______________________

In a clearance fit the tolerance zone of hole will be always __________ the tolerance zone of shaft.

TRANSITION FIT

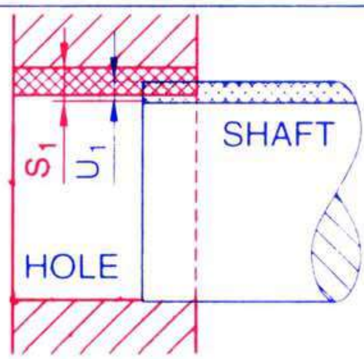

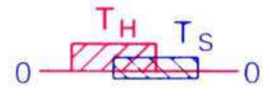

S_1 = ______________________

U_1 = ______________________

In a transition fit the tolerance zone of hole and tolerance zone of shaft will __________

INTERFERENCE FIT

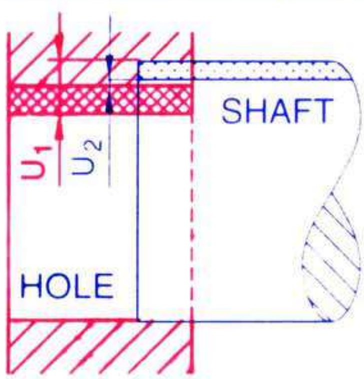

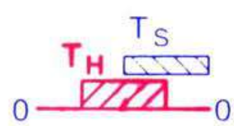

U_1 = ______________________

U_2 = ______________________

In a interference fit the tolerance zone of hole will be always __________ the tolerance zon

BASIC SHAFT SYSTEM (SHAFT BASIS)

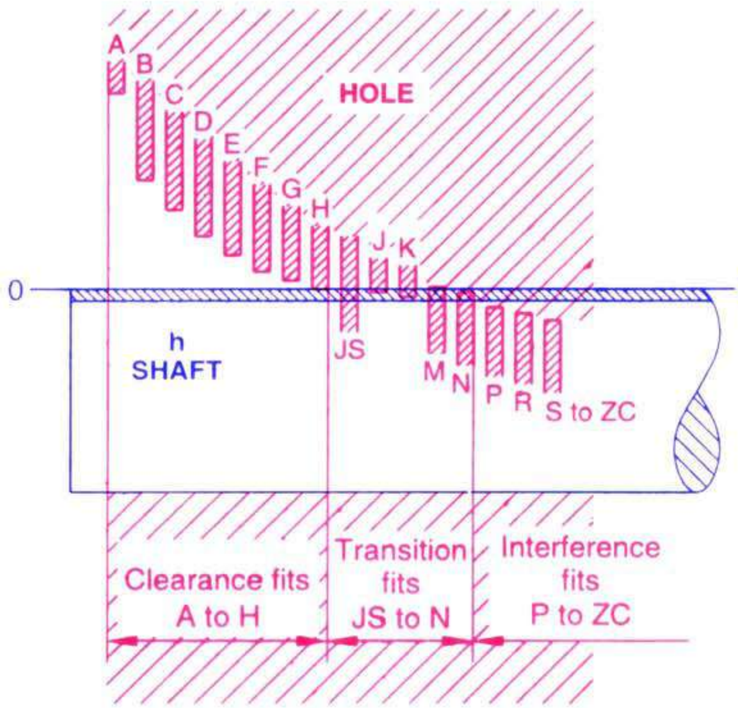

Capital letters A to ZC indicate 25 fundamental deviations for holes.

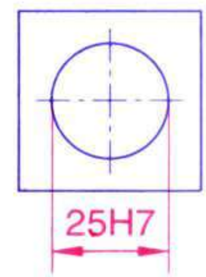

- 25mm is ________ ________
- 'H' is the ________ ________ for hole
- '7' is the ________ of tolerance

APPLICATION

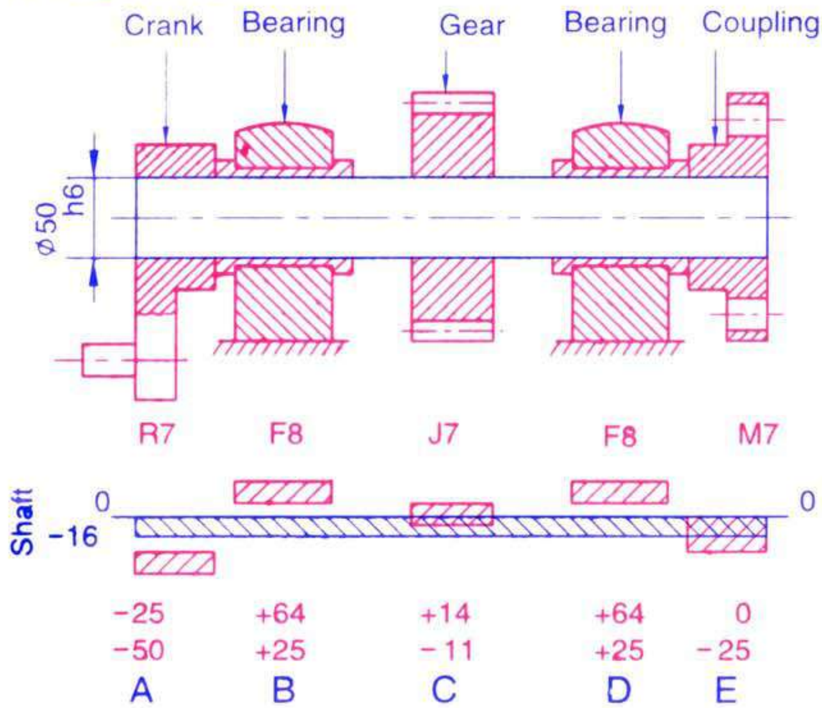

What is shaft basic system?

Name the fit

- A ________________ fit
- B ________________ fit
- C ________________ fit
- D ________________ fit
- E ________________ fit

BASIC HOLE SYSTEM (HOLE BASIS)

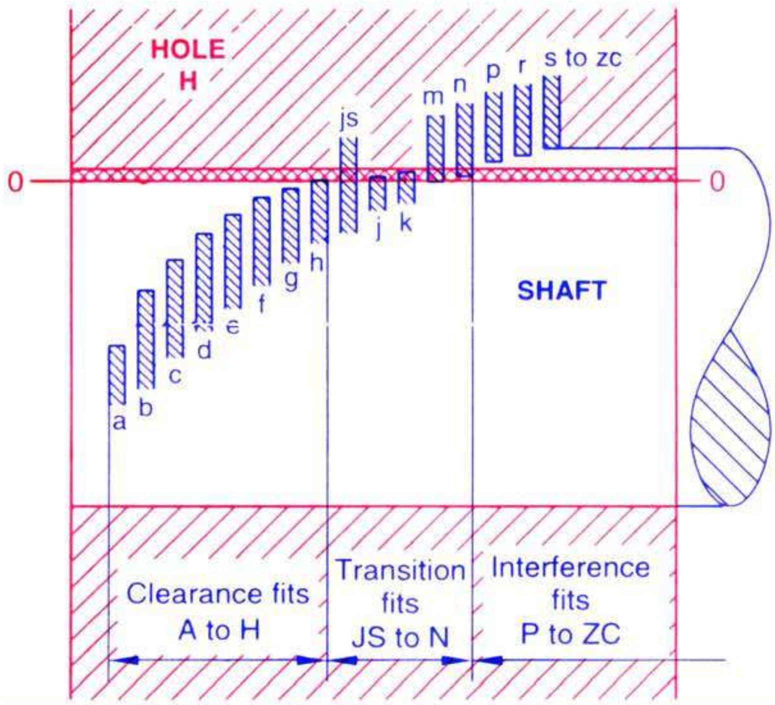

Small letters a to zc indicate 25 fundamental deviations for shafts.

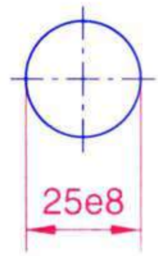

- 25mm is ________ ________
- 'e' is the ________ ________ for shaft
- '8' is the ________ of tolerance

APPLICATION

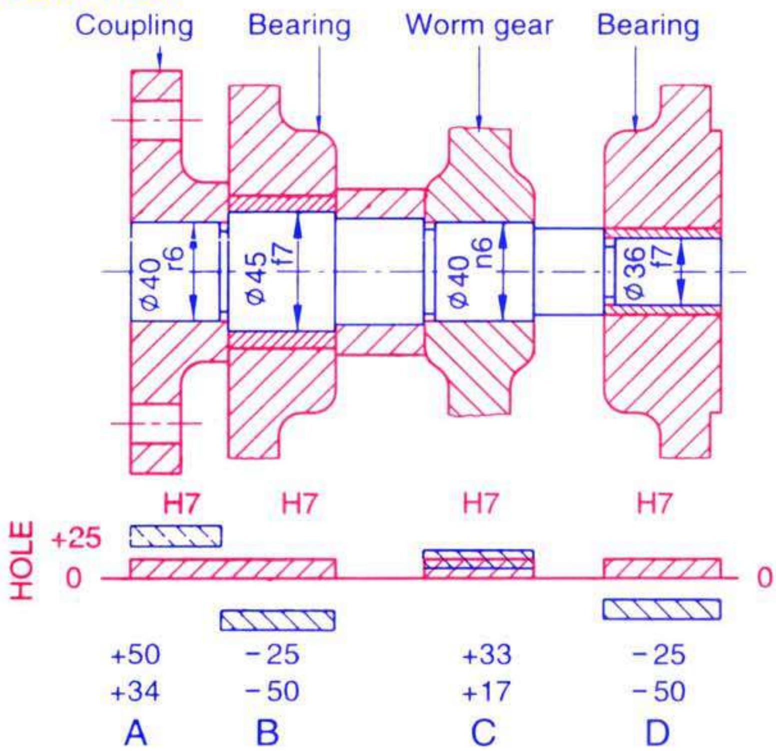

What is hole basic system?

Name the fit

- A ________________ fit
- B ________________ fit
- C ________________ fit
- D ________________ fit

LATHE PARTS AND FUNCTION

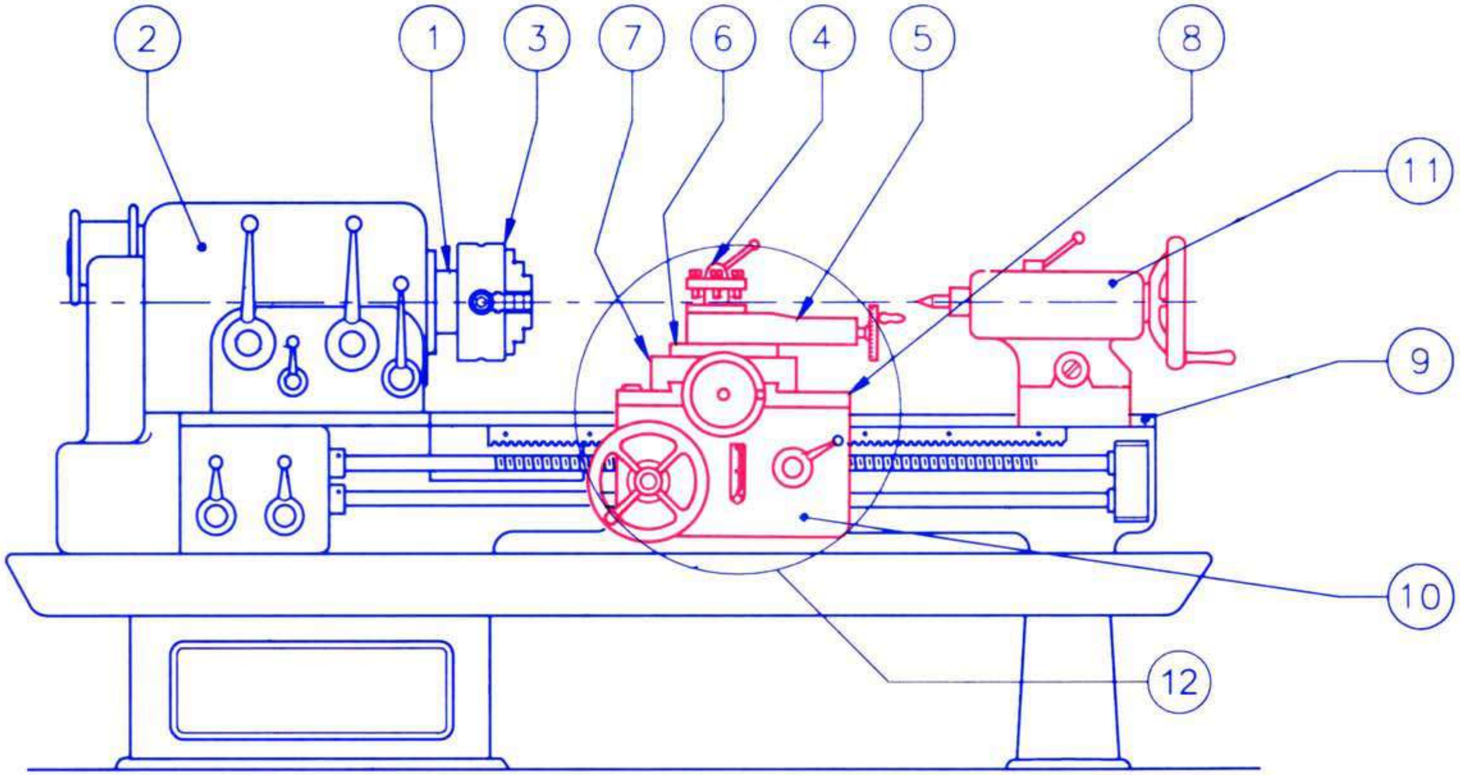

QUICK RETURN MOTION OF SHAPER

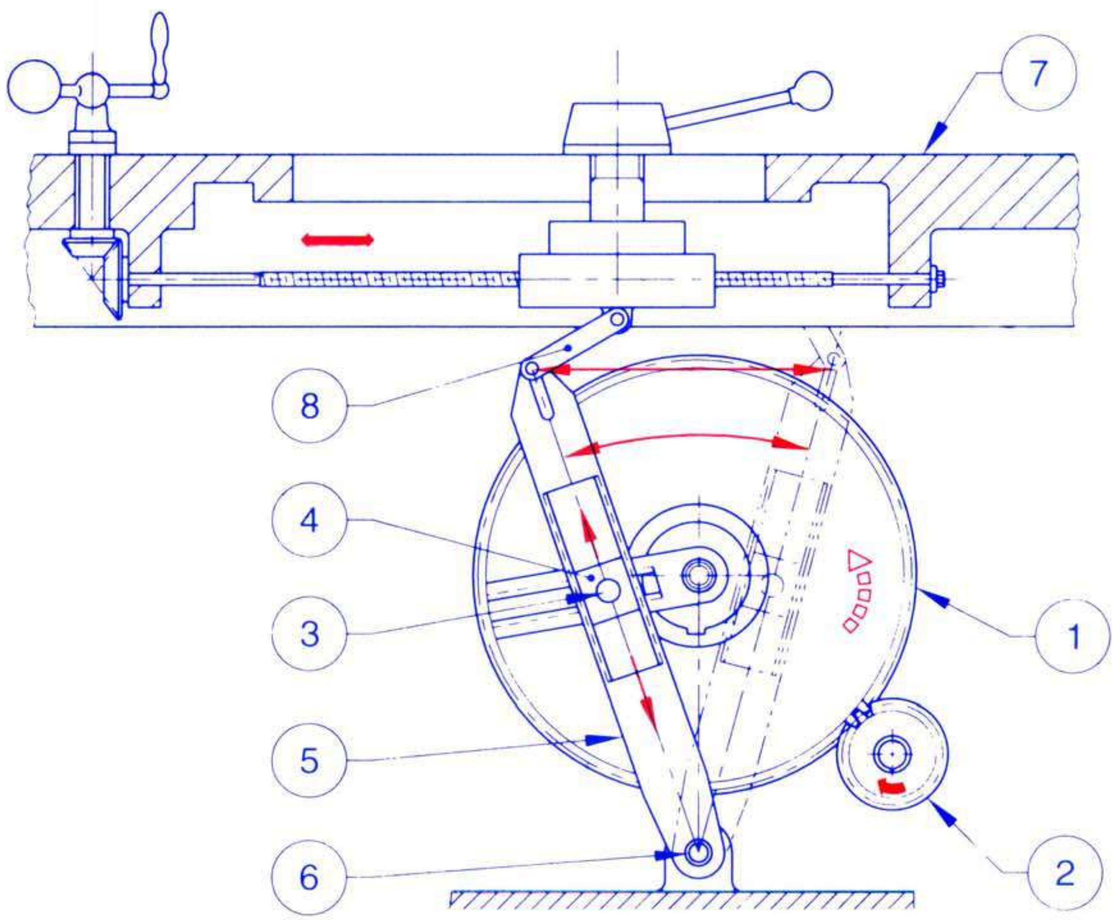

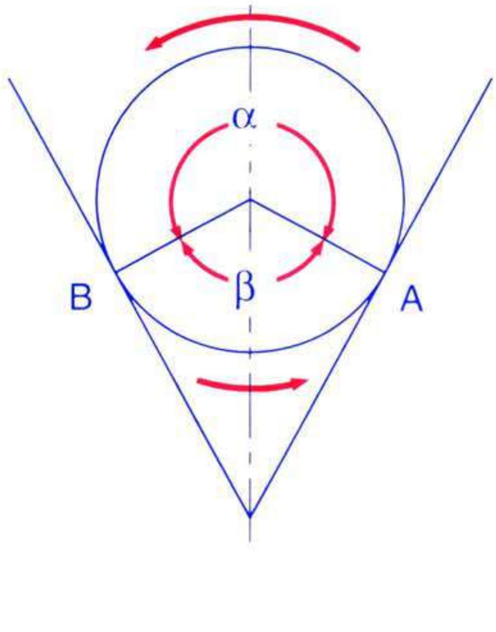

CIMI CENTRAL INSTRUCTIONAL MEDIA INSTITUTE, CHENNAI
INDO - GERMAN PROJECT

gtz

TR 01 16 03 01 98

FEED MECHANISM OF A SHAPER

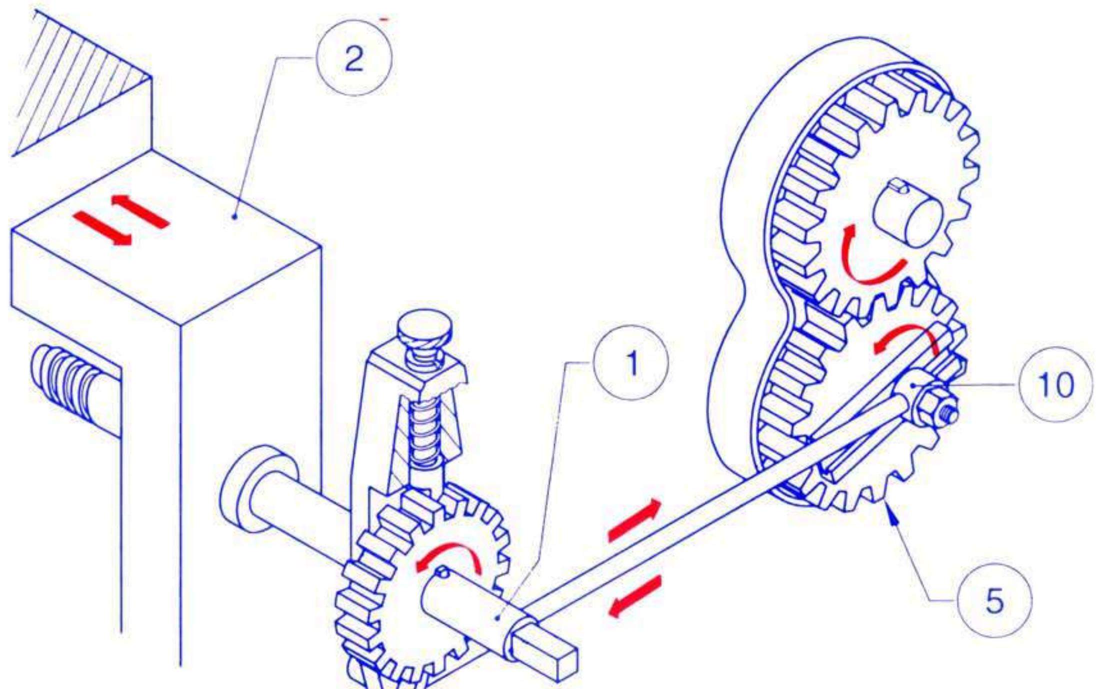

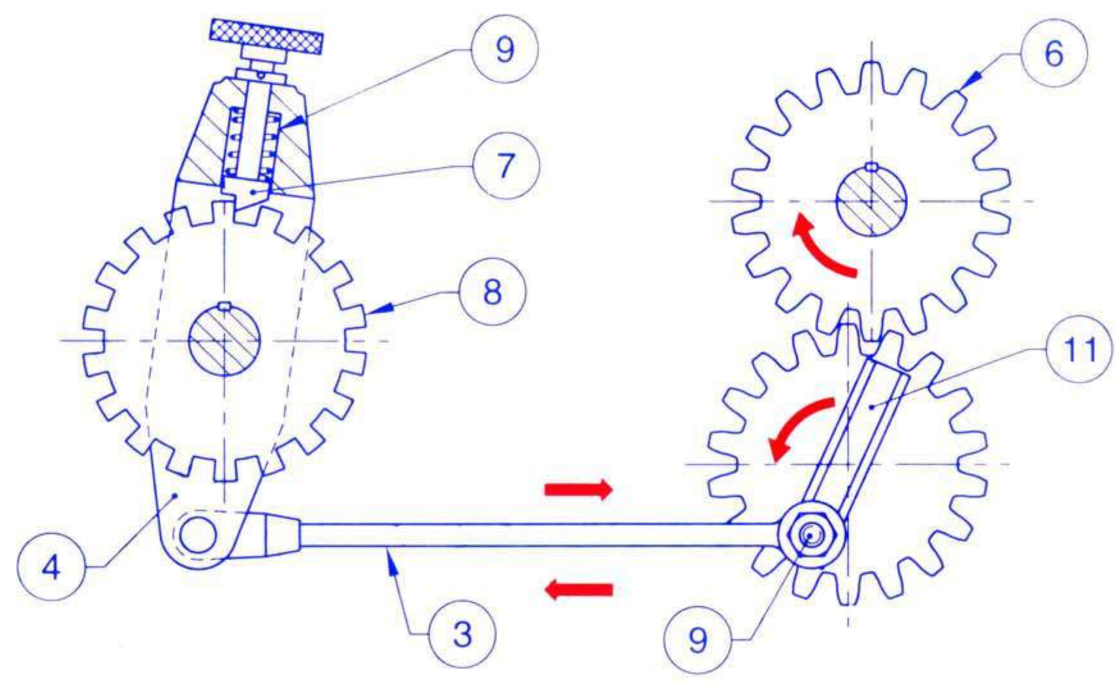

HYDRAULIC SHAPER MECHANISM

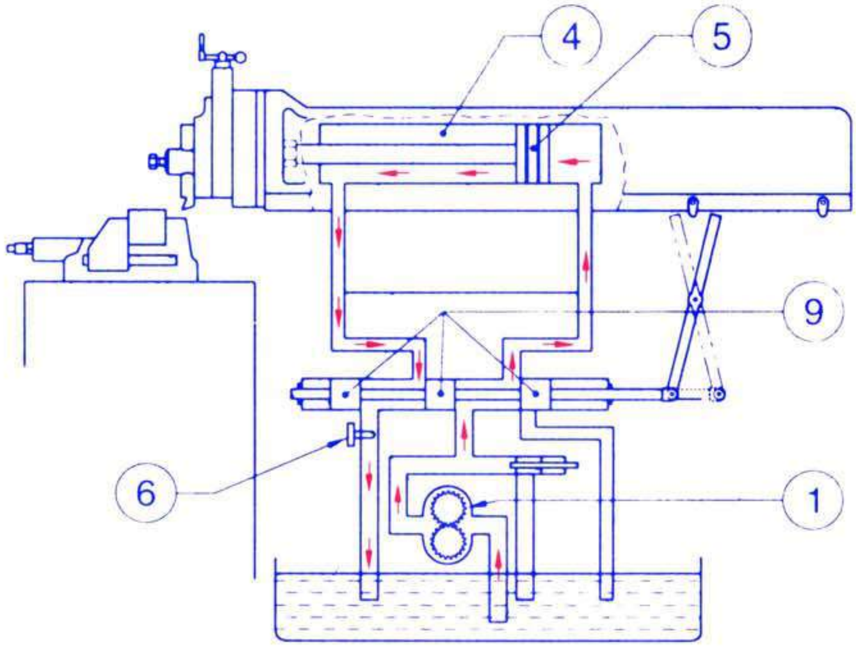

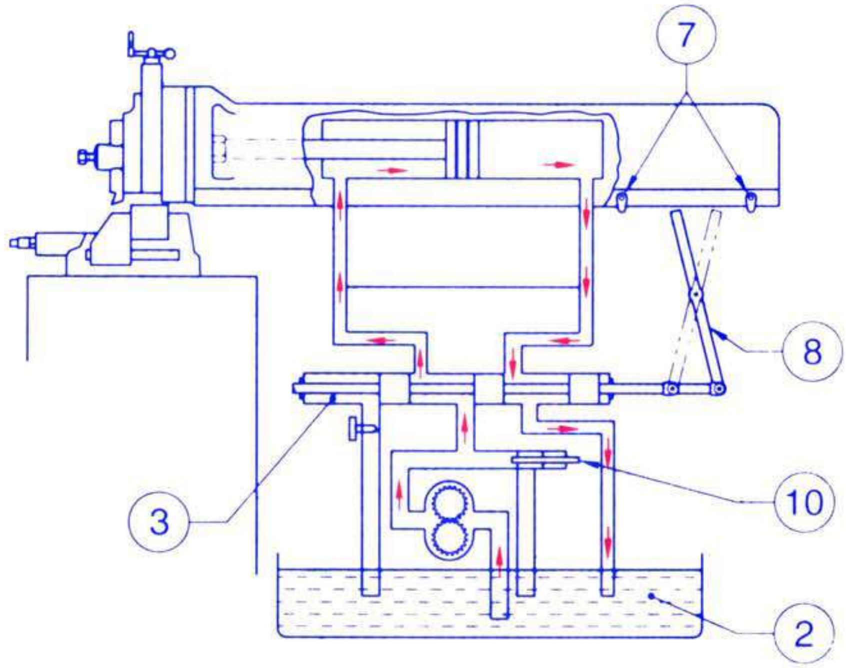

RELATIONSHIP OF HELIX ANGLE & FORCE ACTING

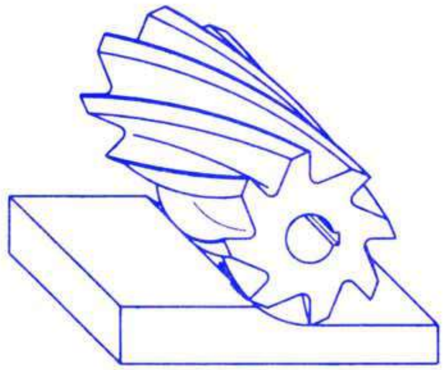

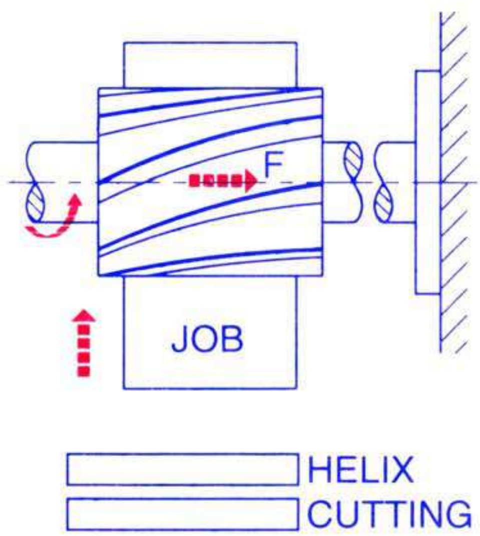

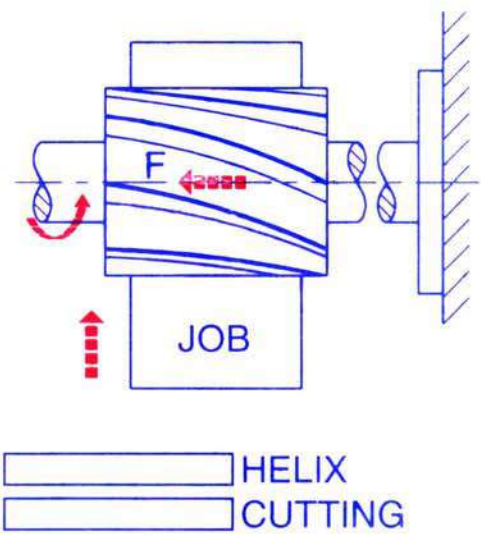

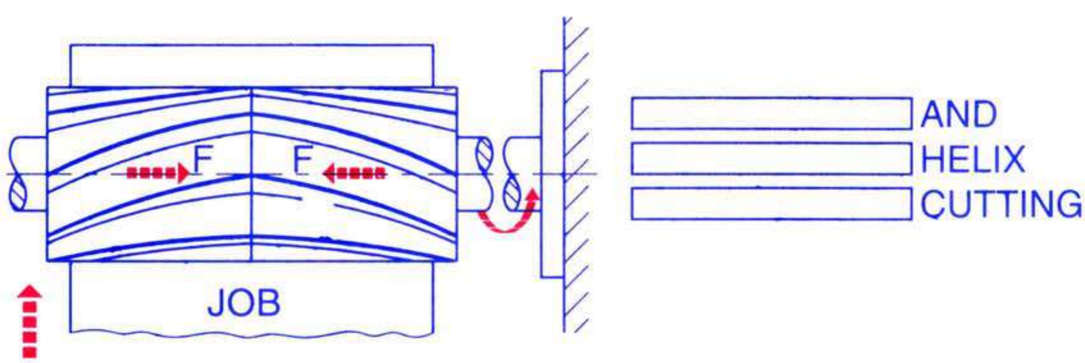

How the axial pressure is partially compensated?

CIMI CENTRAL INSTRUCTIONAL MEDIA INSTITUTE, CHENNAI
INDO - GERMAN PROJECT

TR01 19 04 01 98

UP MILLING AND DOWN MILLING

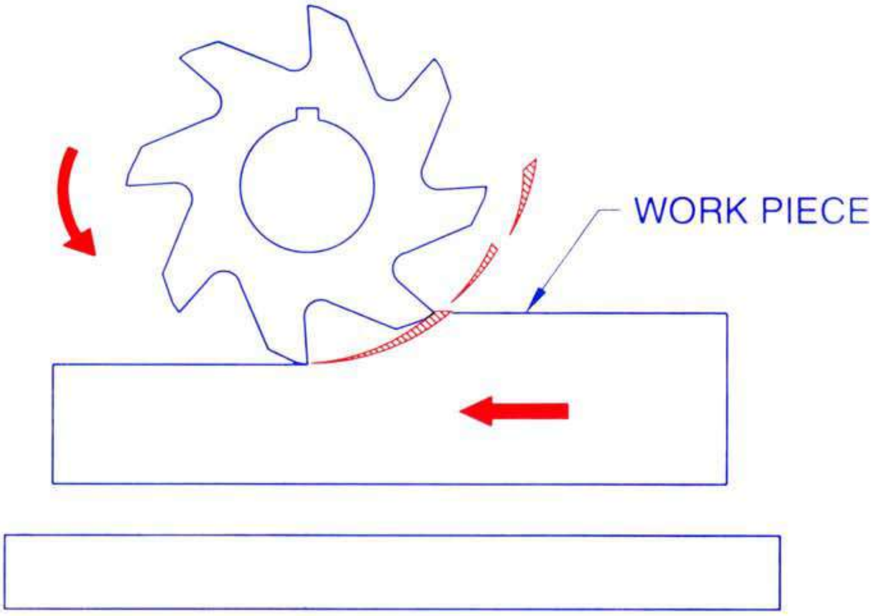

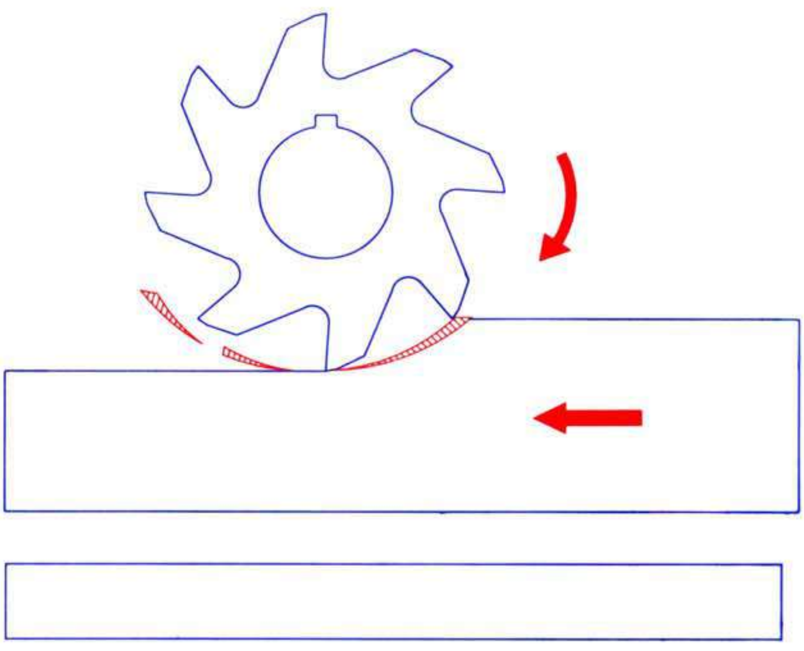

CENTRAL INSTRUCTIONAL MEDIA INSTITUTE, CHENNAI
INDO - GERMAN PROJECT
TR 01 19 05 01 98

DIVIDING HEAD PARTS AND FUNCTIONS

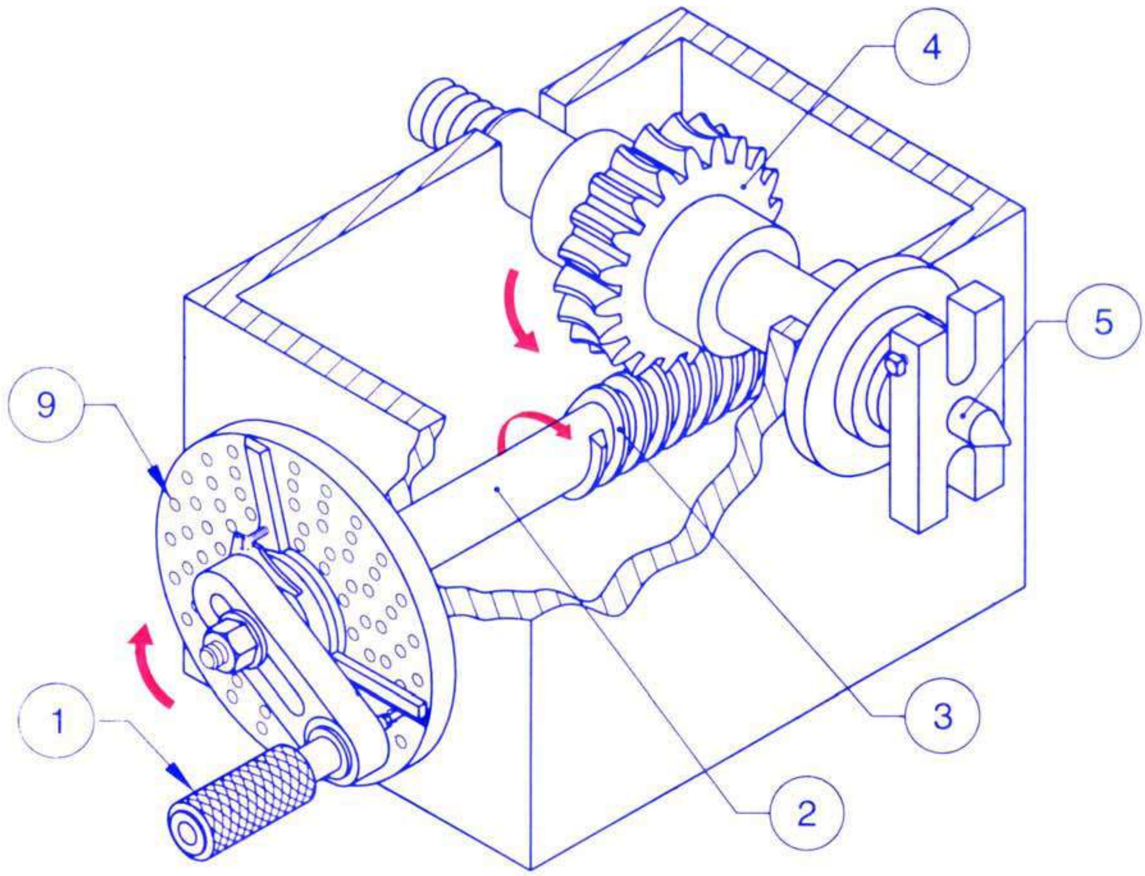

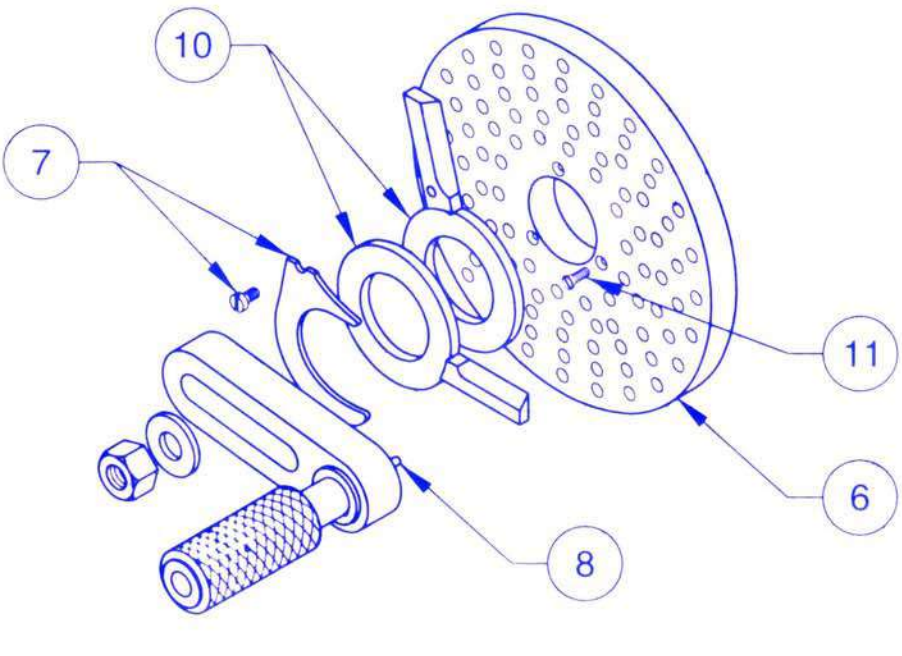

CIMI CENTRAL INSTRUCTIONAL MEDIA INSTITUTE, CHENNAI
INDO - GERMAN PROJECT
gtz
TR 01 20 02 01 98

ELEMENTS OF A SPUR GEAR - I

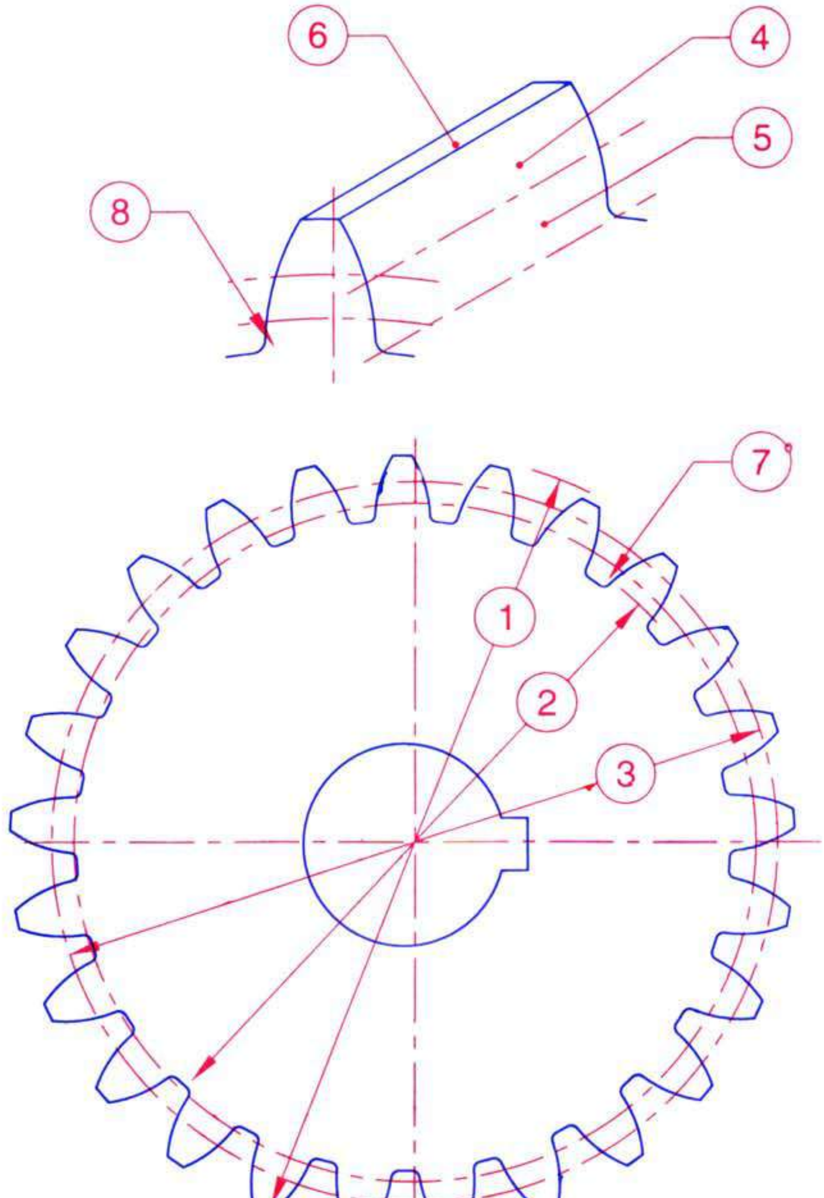

ELEMENTS OF A SPUR GEAR - II

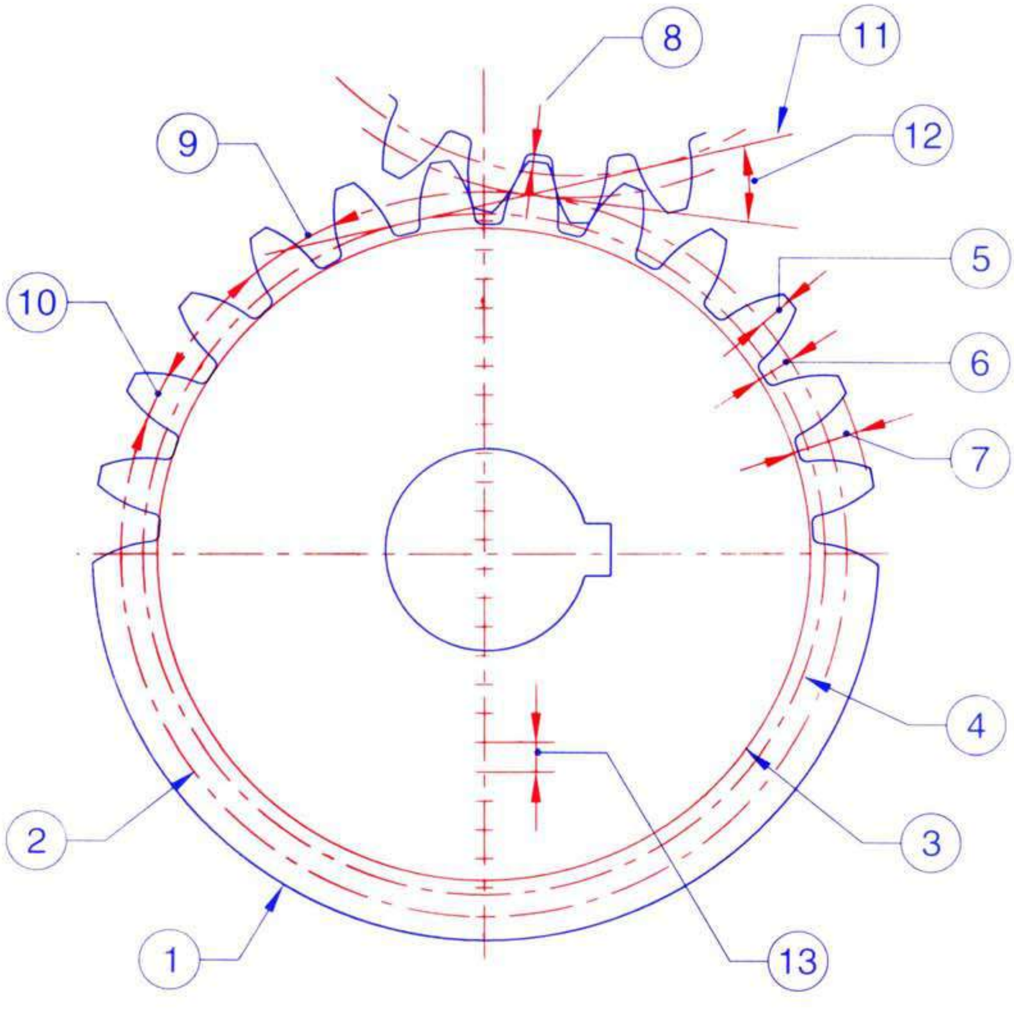

GEAR TOOTH VERNIER CALIPER & ITS APPLICATION

CORRECTED ADDENDUM (hac)

$= m + \frac{mZ}{2}\left(1 - \cos\frac{90}{Z}\right)$

=

=

=

=

= [mm]

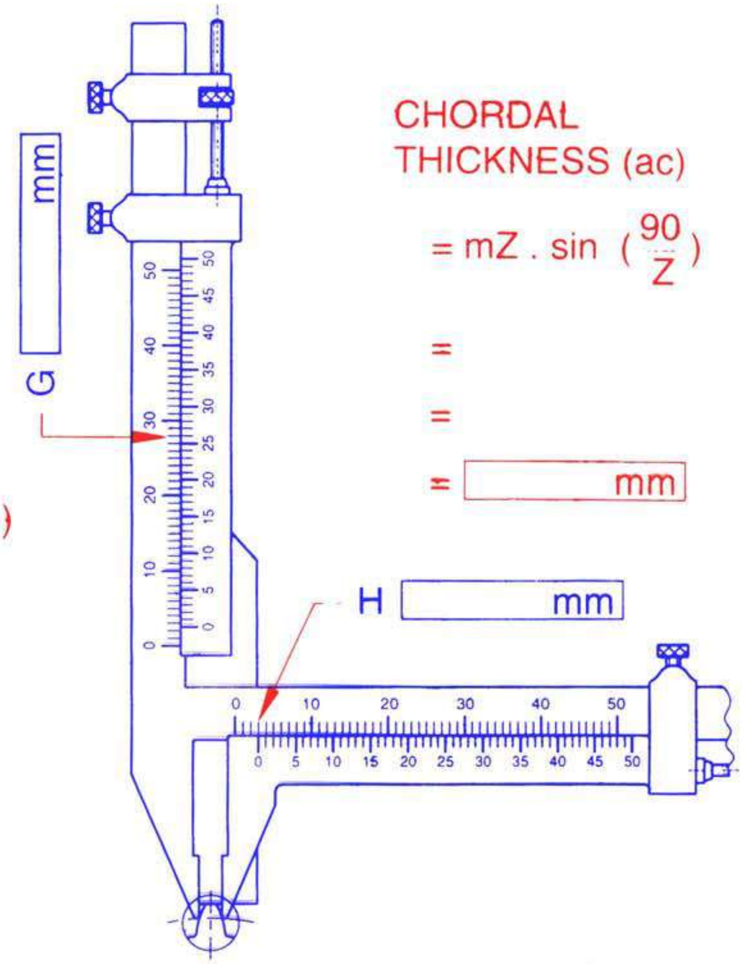

CHORDAL THICKNESS (ac)

$= mZ \cdot \sin\left(\frac{90}{Z}\right)$

=

=

= [mm]

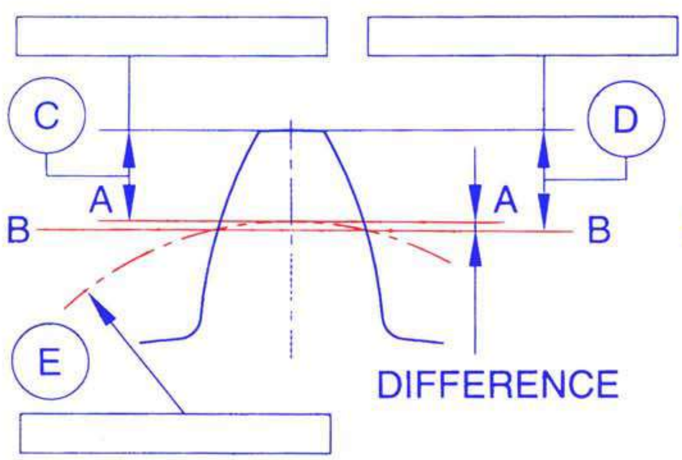

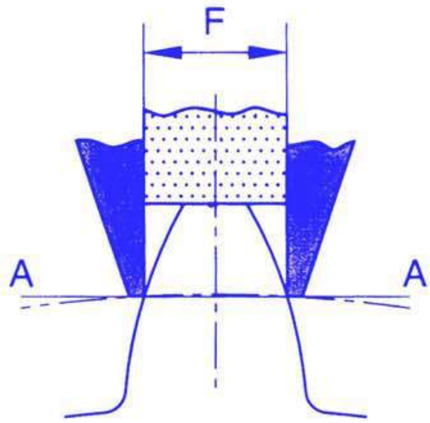

CIMI CENTRAL INSTRUCTIONAL MEDIA INSTITUTE, MADRAS
AN INDO-GERMAN PROJECT

gtz

TR 01 02 10 01 95

MEASUREMENT OF TAPER ANGLE USING SINEBAR

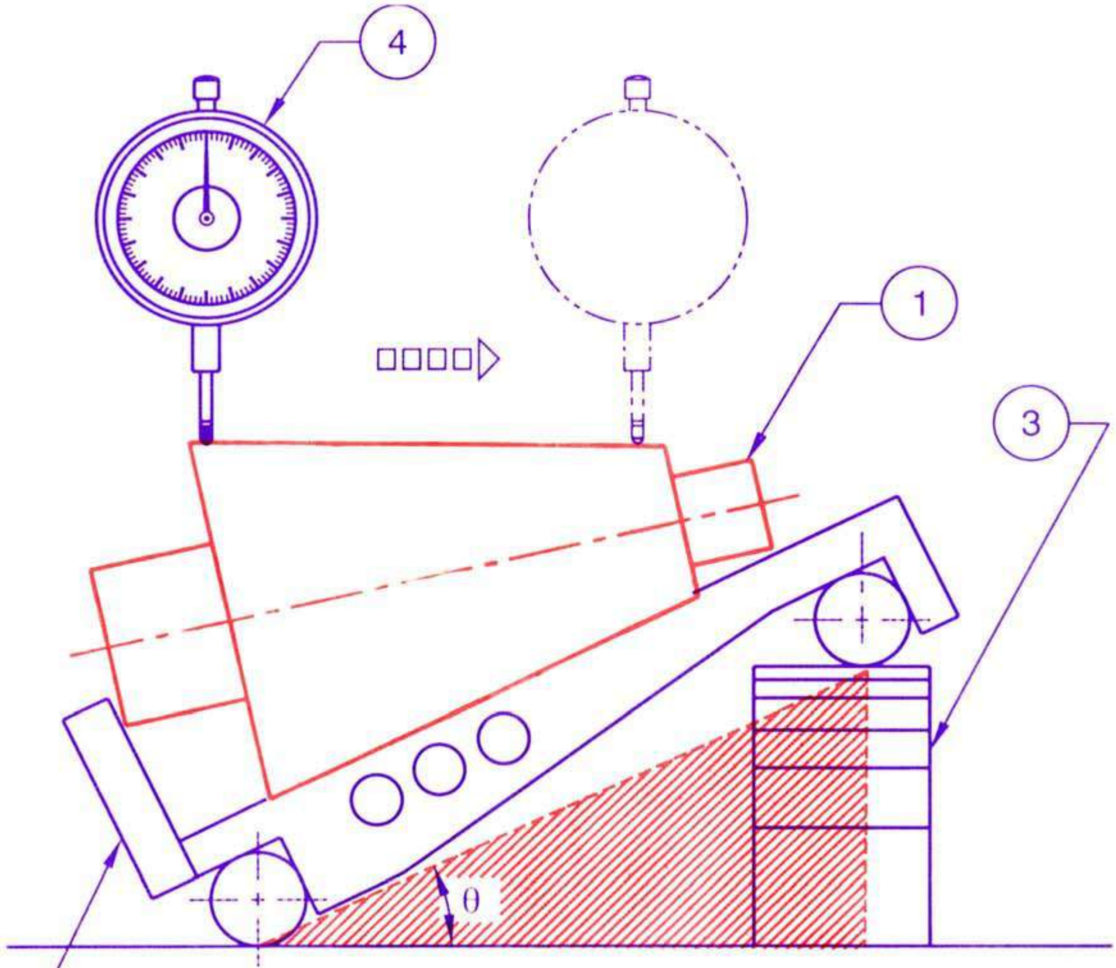

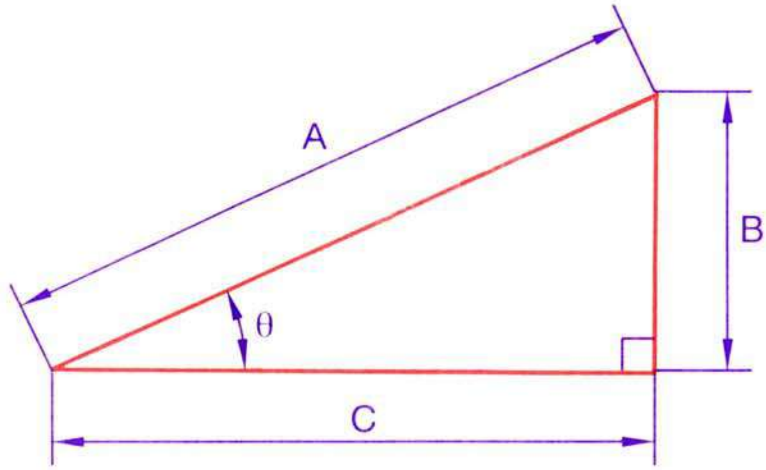

TAPER CALCULATION USING SINEBAR

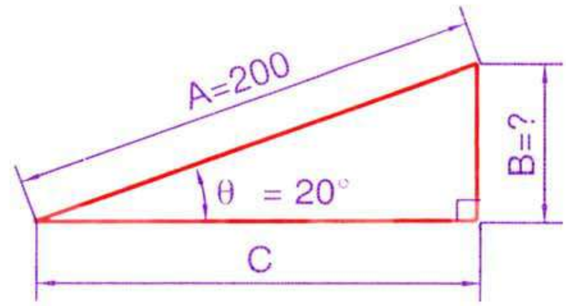

1. What is the height of the slip gauges used?

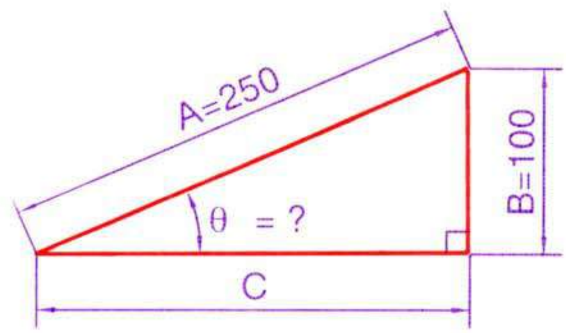

2. What is the included angle of the tapered job?

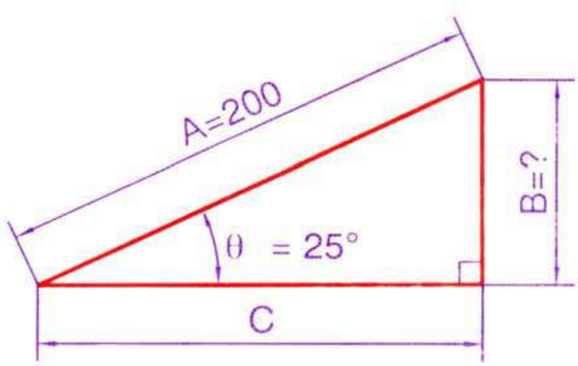

3. What is the height of the slip gauges used?

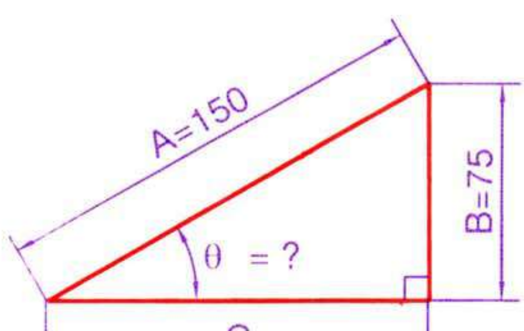

4. What is the included angle of the tapered job?

DETERMINING SLIP GAUGE SIZES

Set of 112 pieces

Range (mm)	Steps (mm)	No. of pieces
1.0005	-	1
1.001 to 1.009	0.001	9
1.01 to 1.49	0.01	49
0.5 to 24.5	0.5	49
25 to 100	25	4
Total pieces		**112**

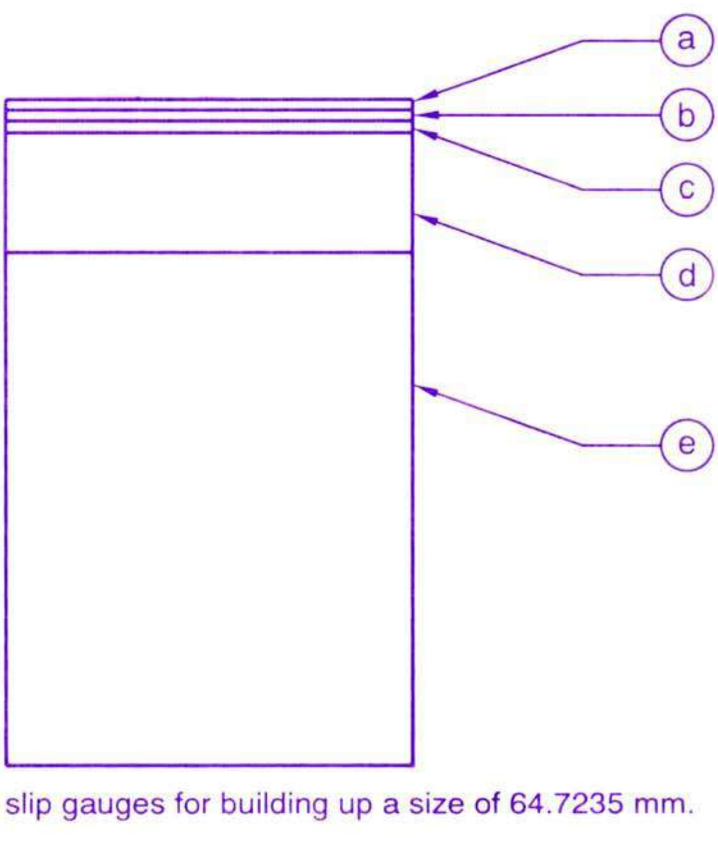

Determine the slip gauges for building up a size of 64.7235 mm.

LEVELLING A LATHE

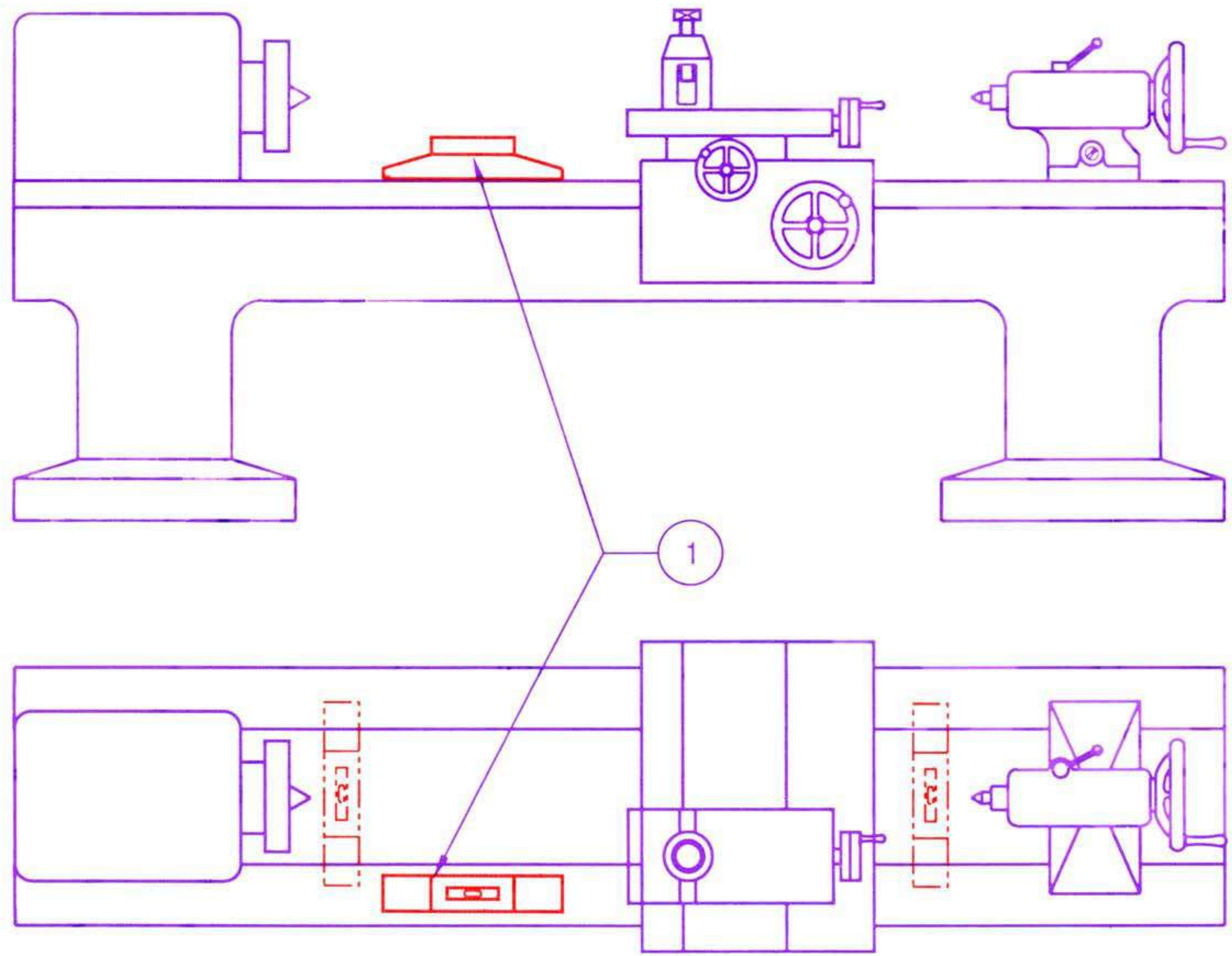

BASIC ALIGNMENTS OF A LATHE

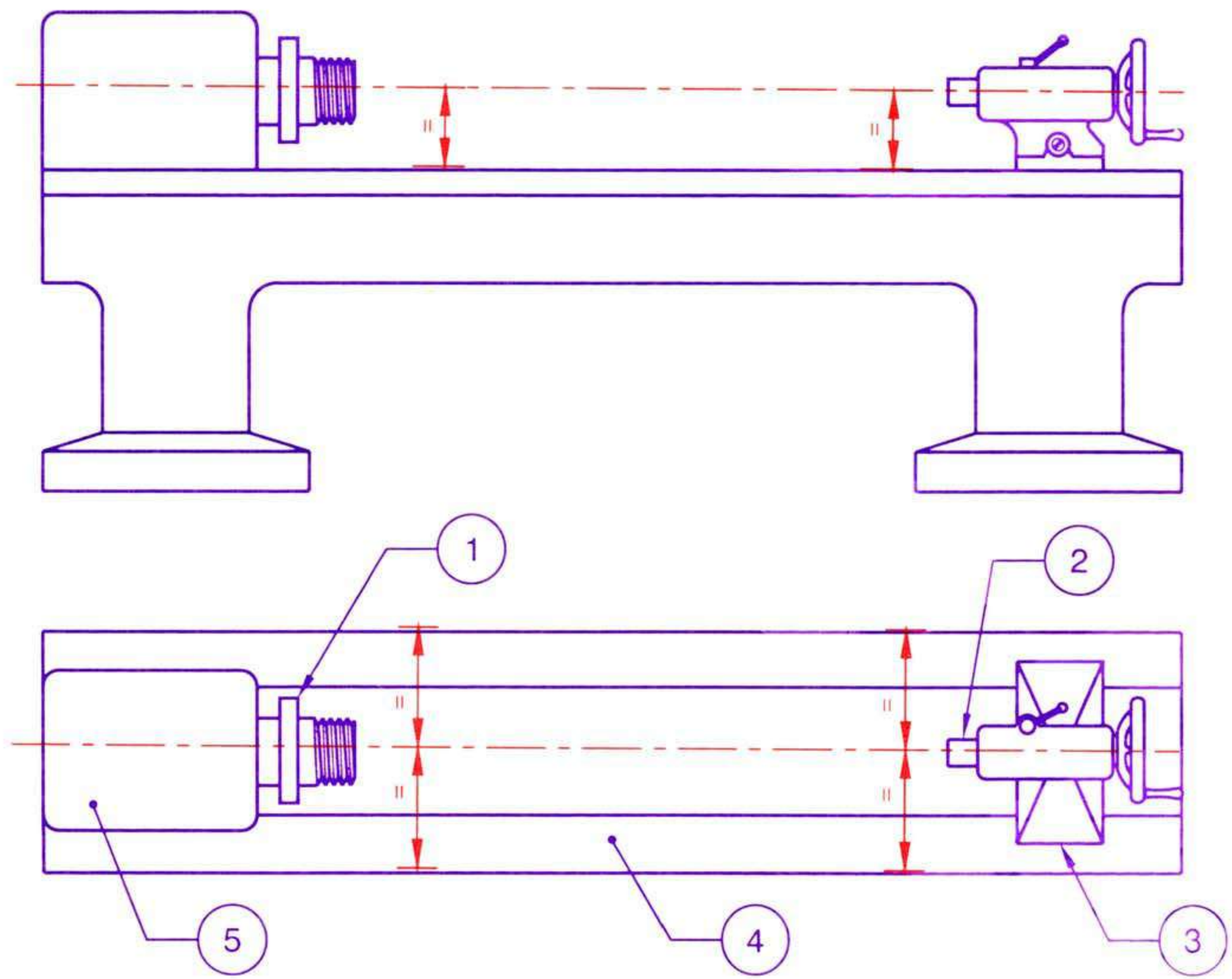

CENTRE LATHE BASIC GEOMETRY - (1)

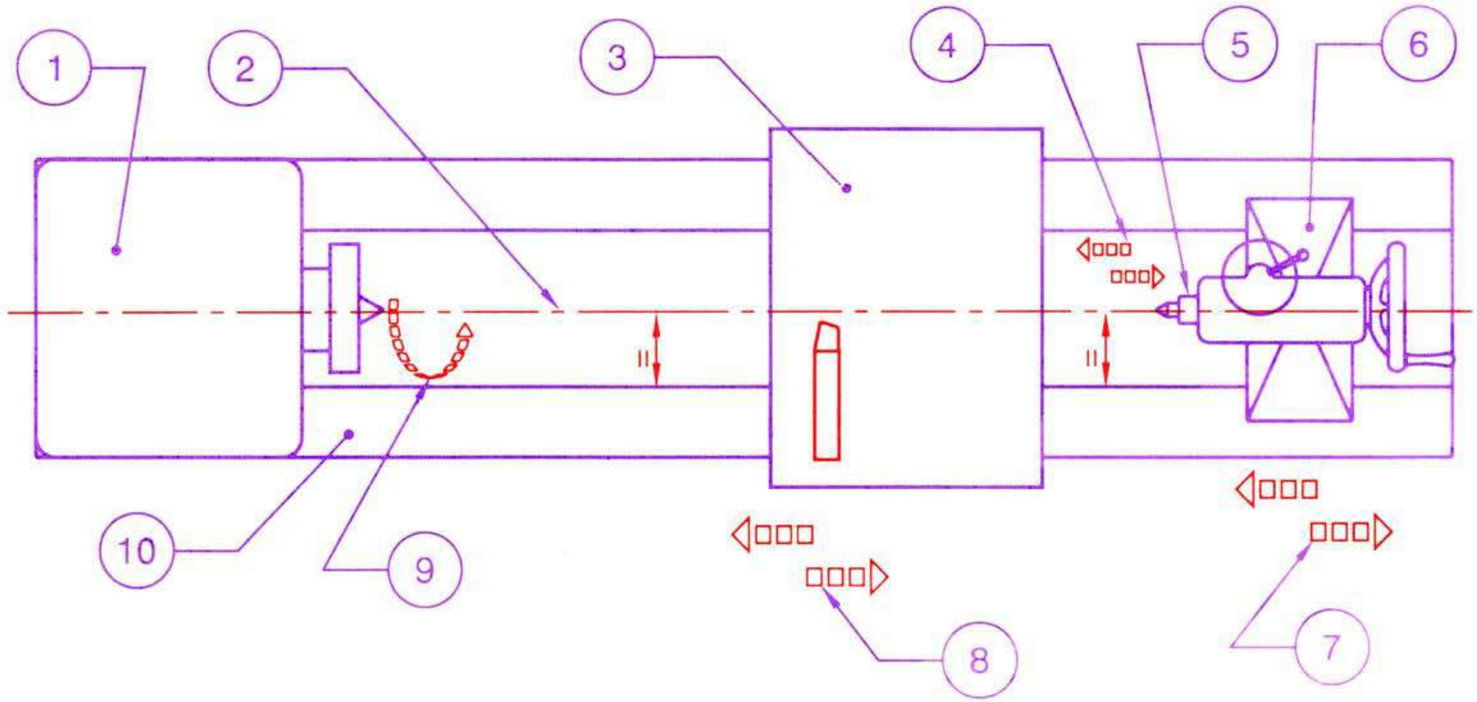

TR 01 07 01 04 95

CENTRE LATHE BASIC GEOMETRY - (2)

A

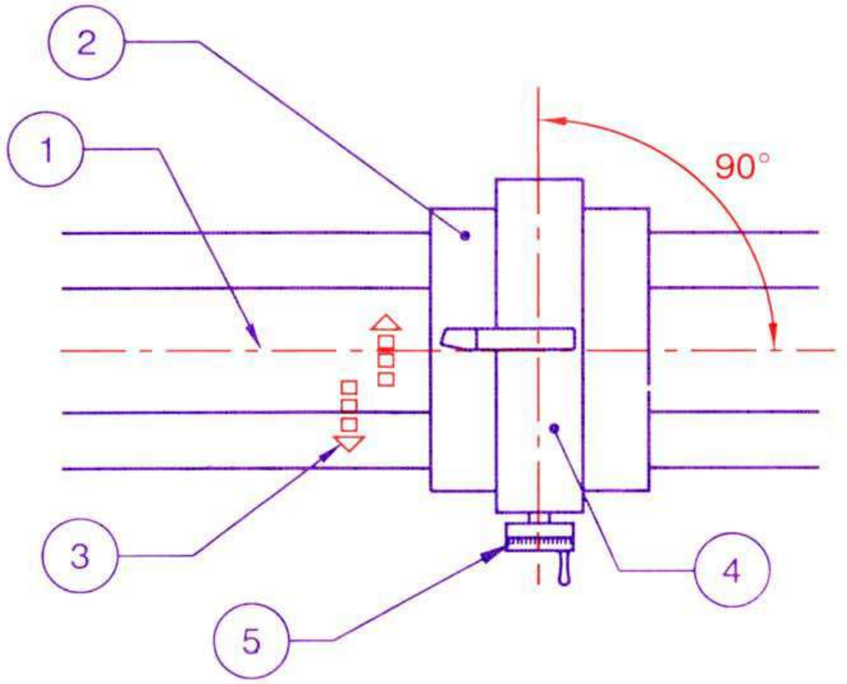

B

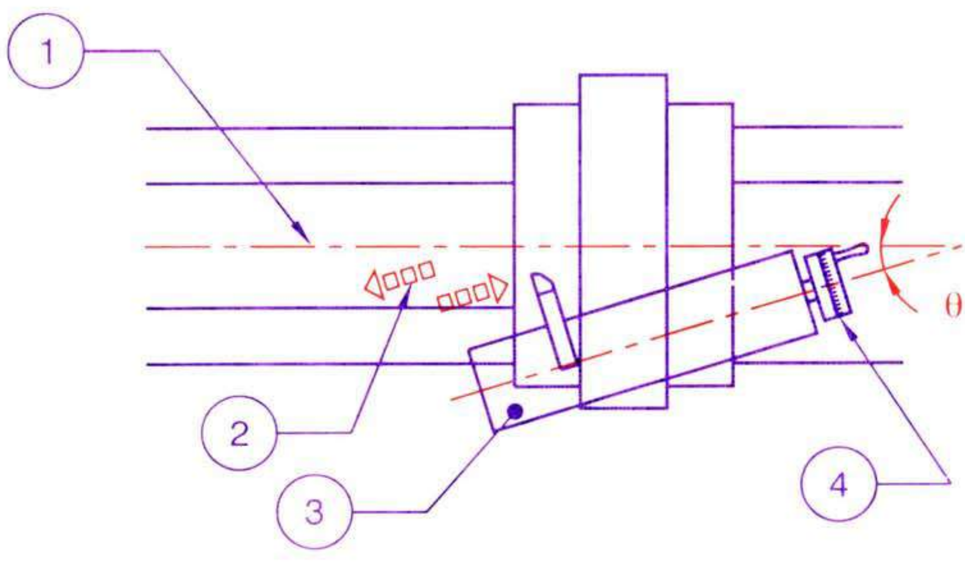

LOAD CONDITIONS FOR BEARINGS

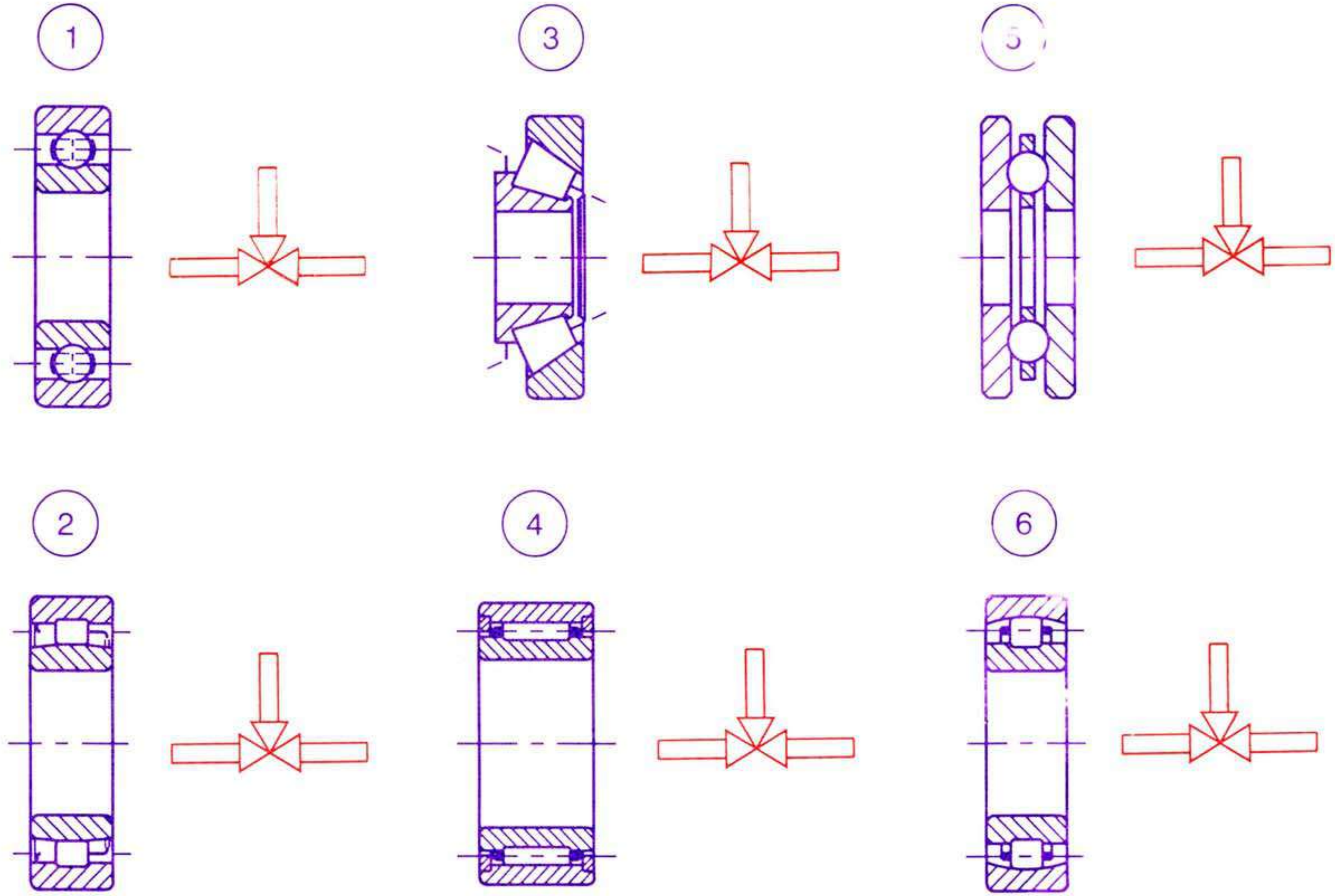

APPLICATIONS OF BEARINGS - (A)

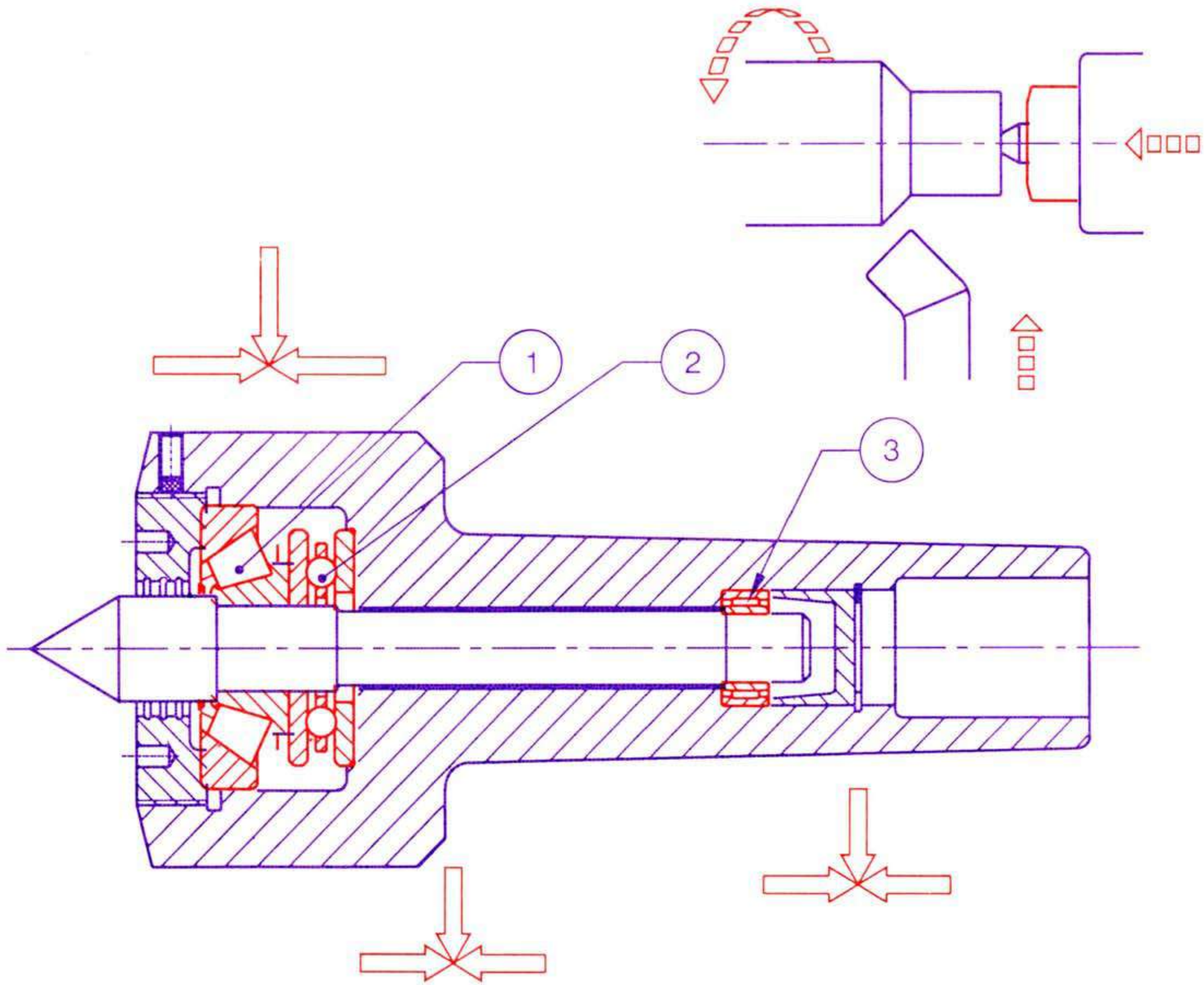

APPLICATIONS OF BEARINGS - (B)

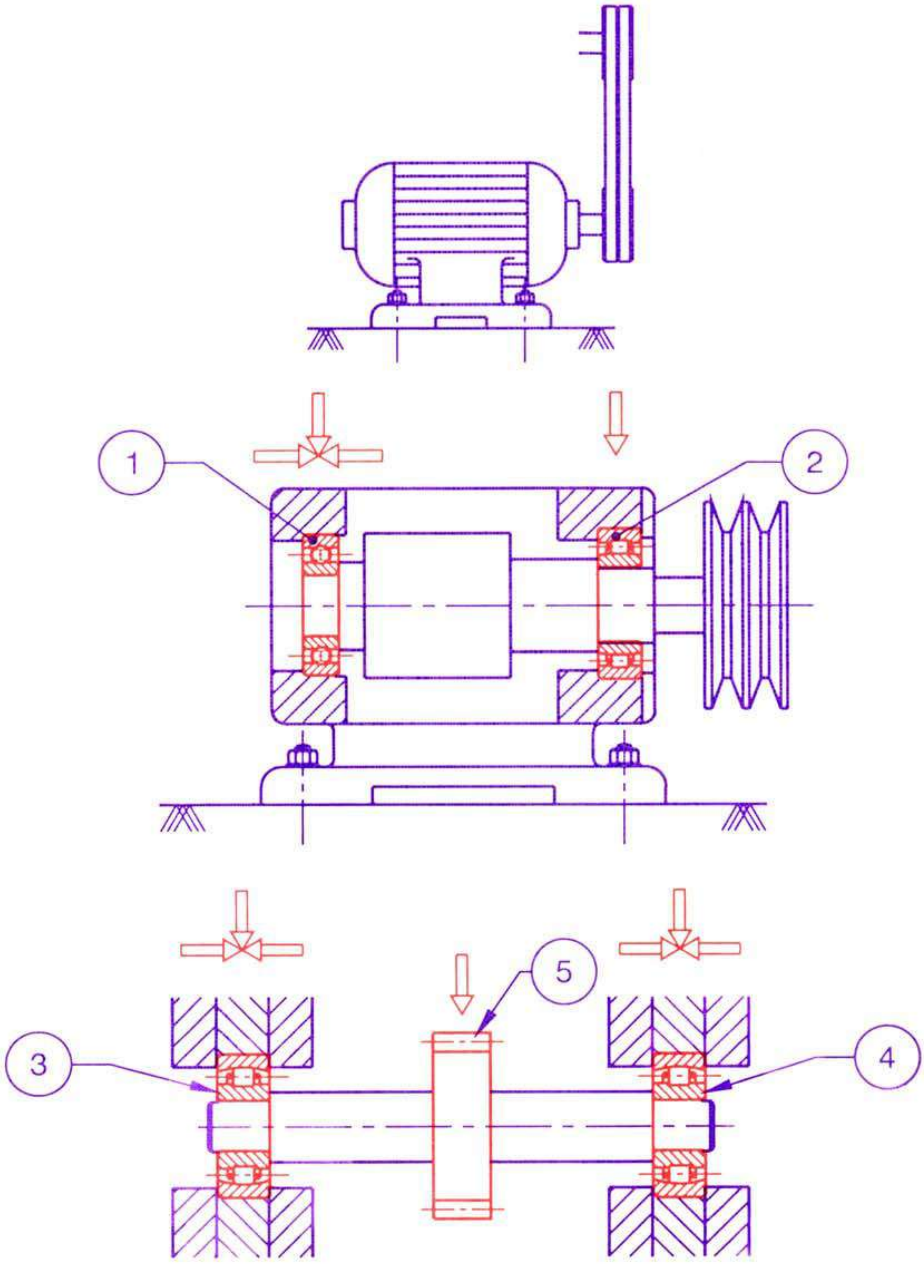

FITTING AND DISMANTLING OF BEARINGS

1

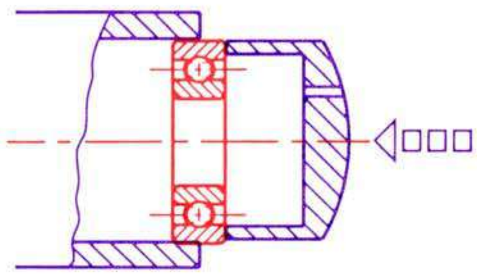

2

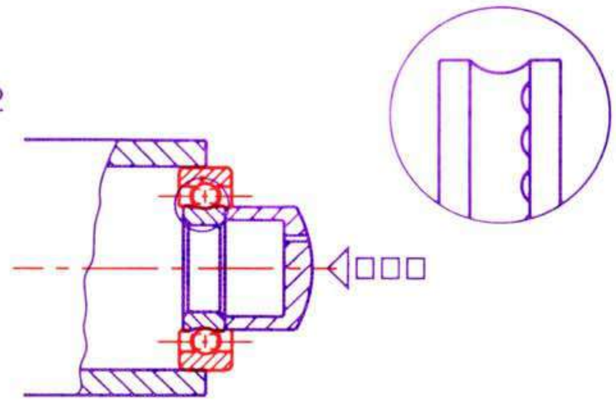

3

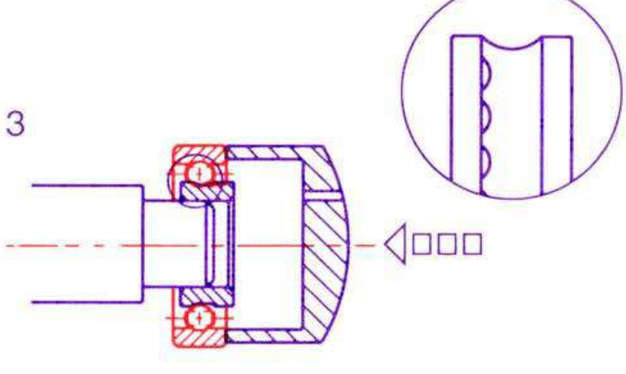

4

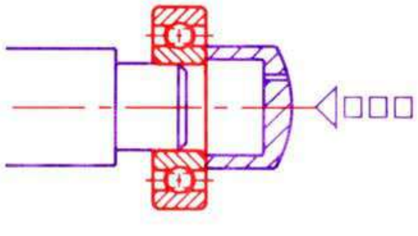

5

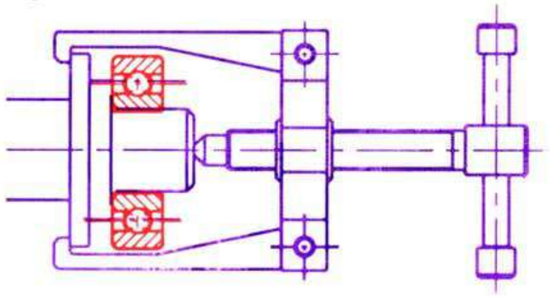

6

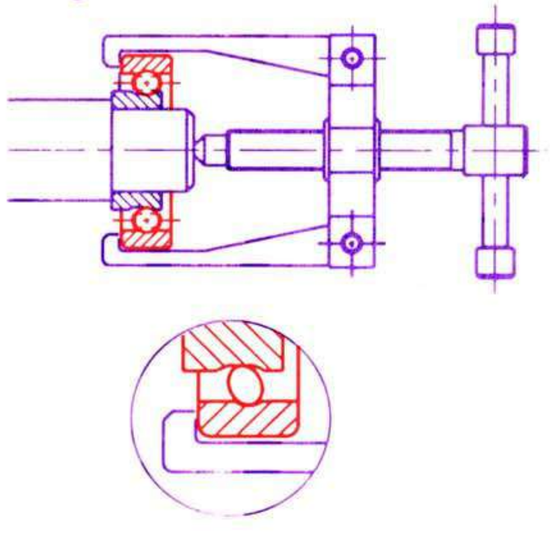

COUPLING ASSEMBLY

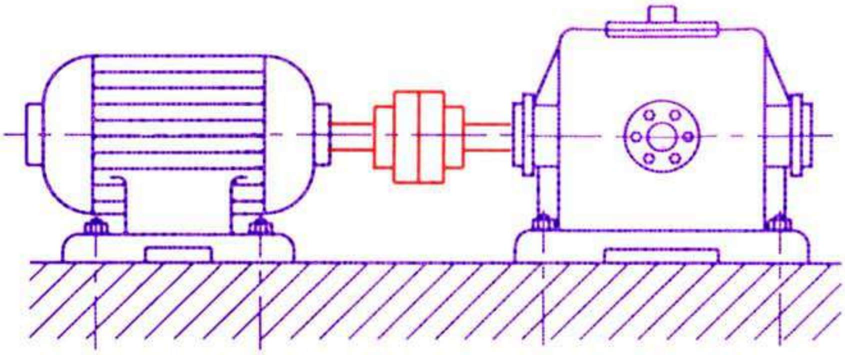

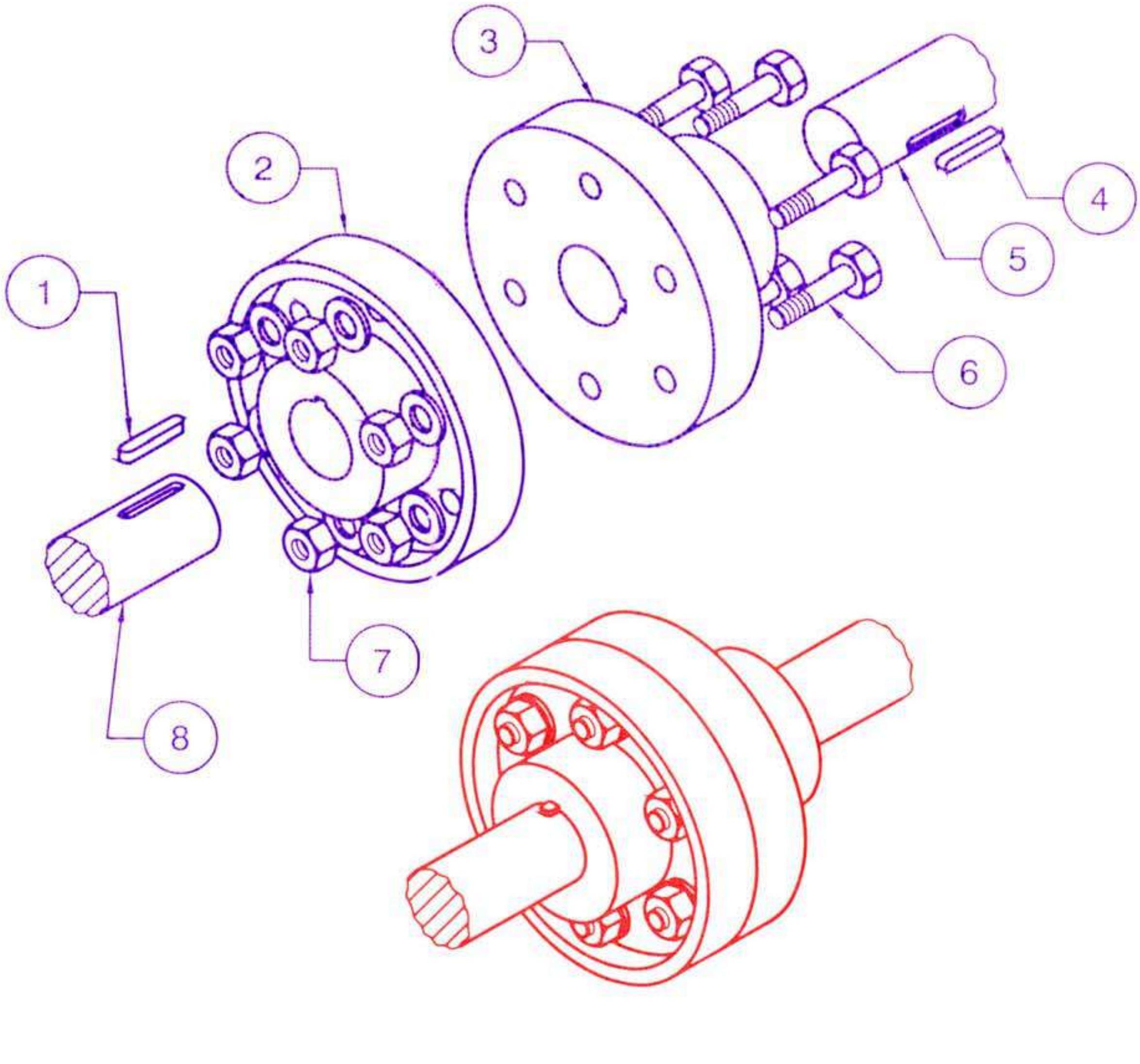

CLAMP COUPLING

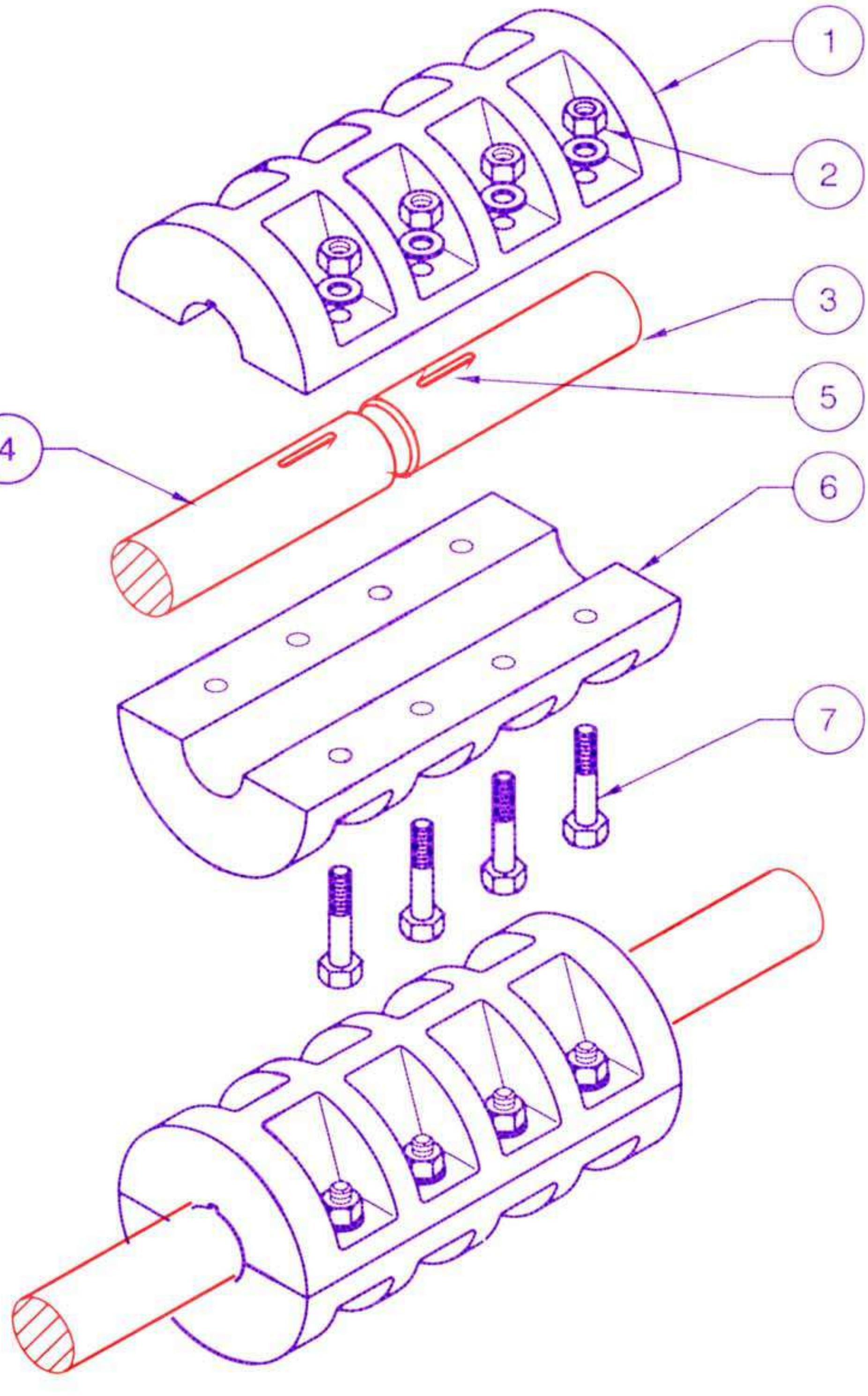

APPLICATION OF CLUTCHES (FRICTION AND FORM FITTING)

A

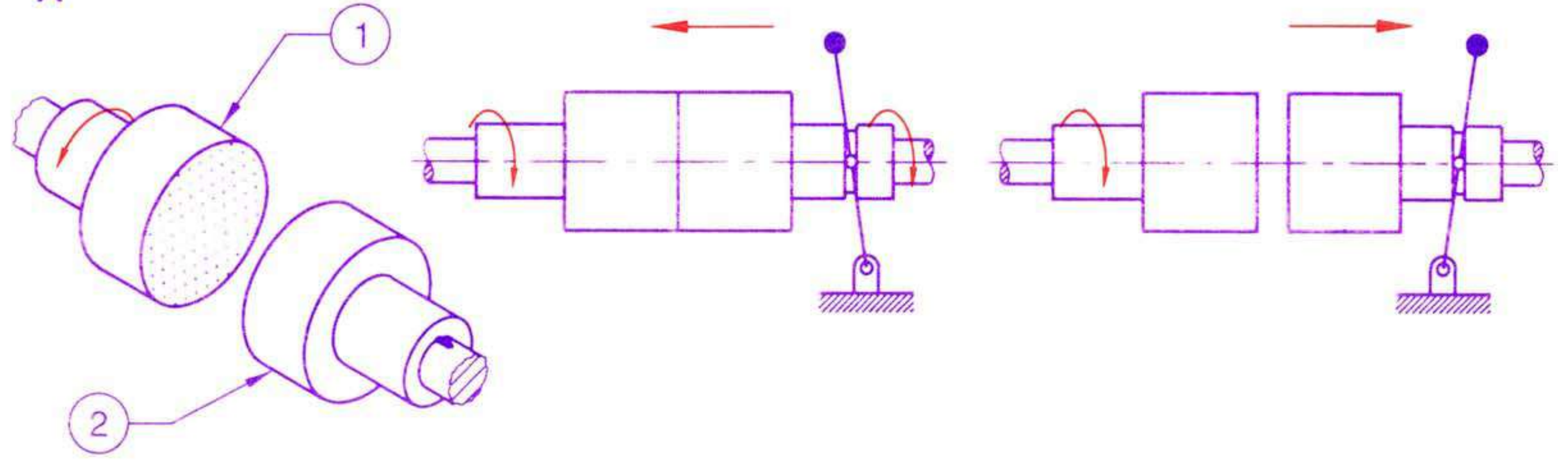

B

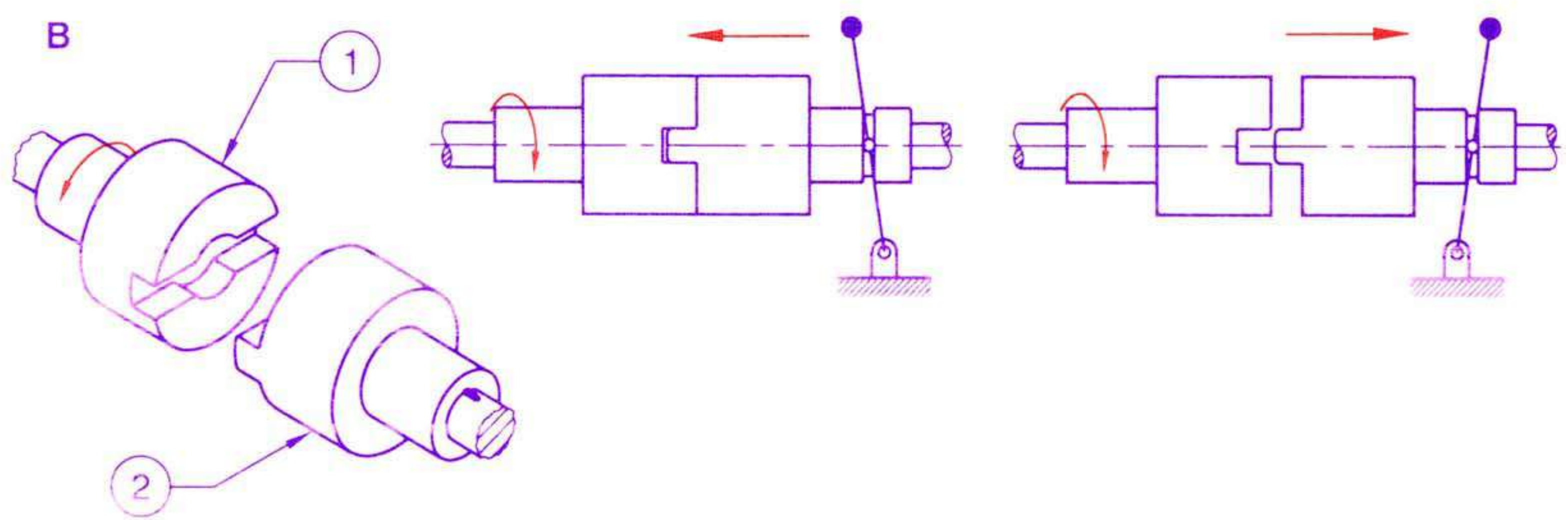

MULTIPLE DISK CLUTCH

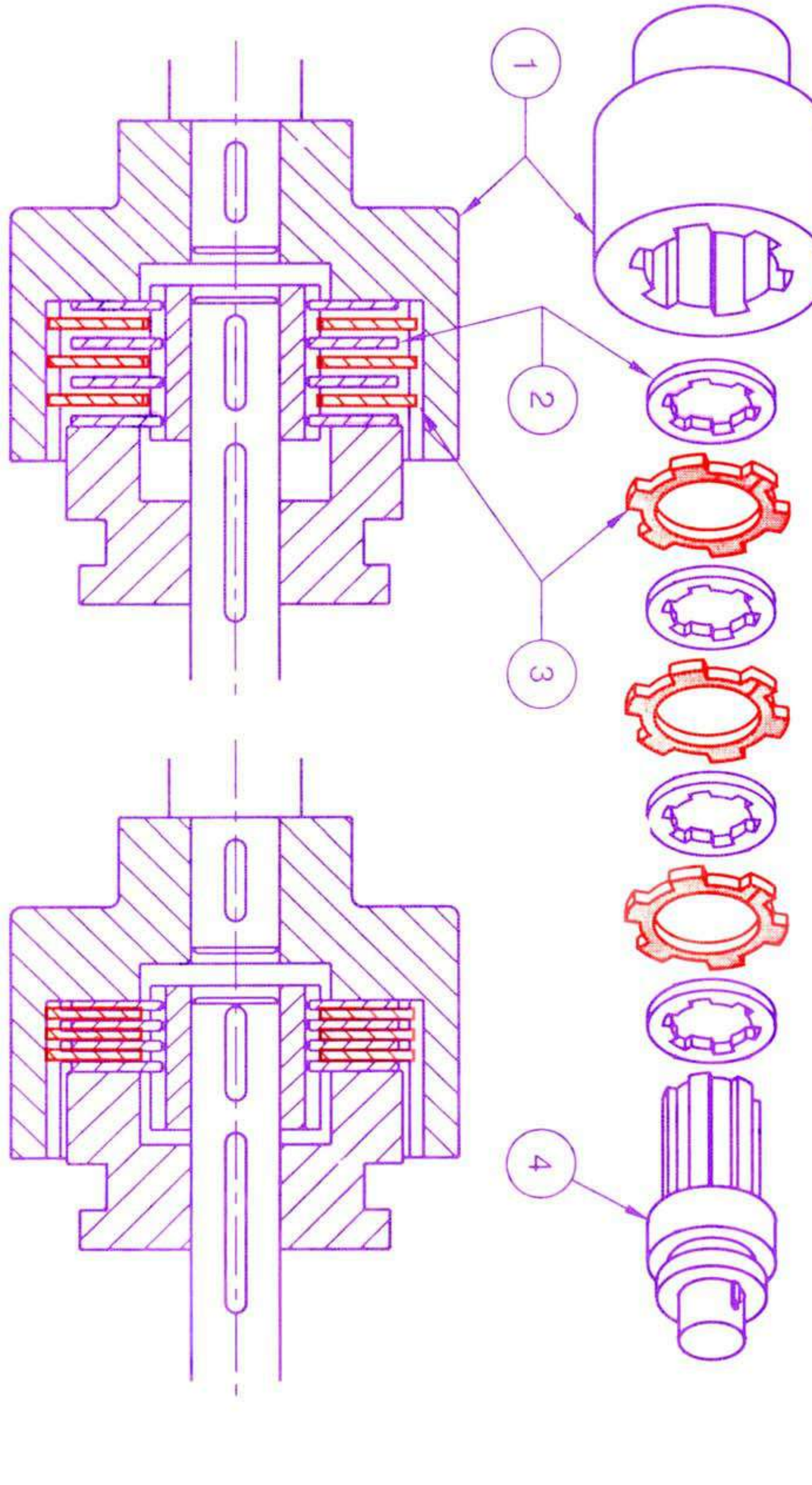

SLIDE WAYS AND WEAR ADJUSTMENT

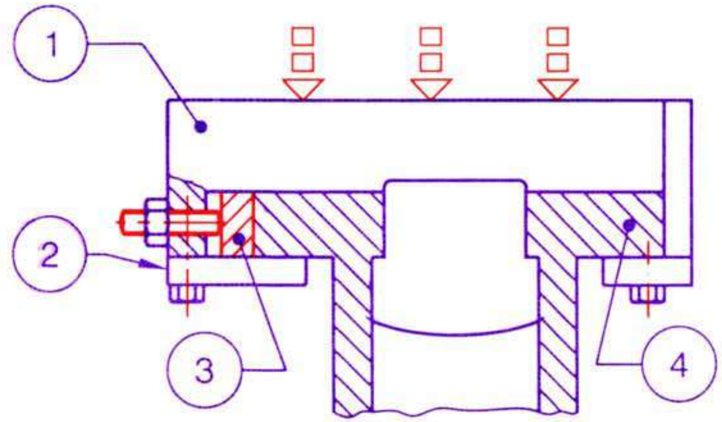

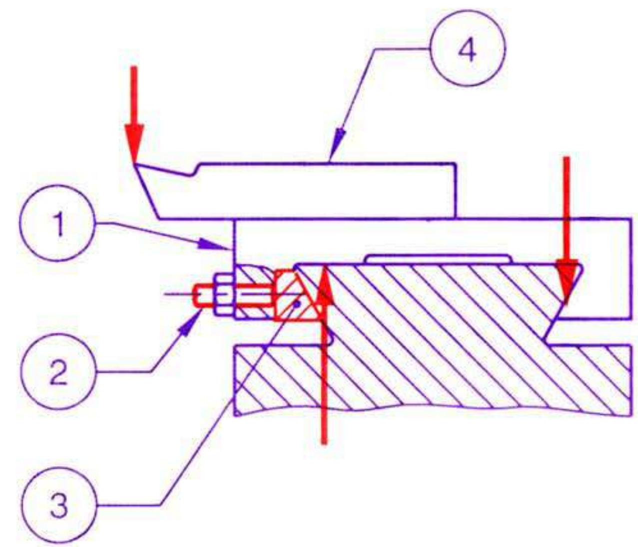

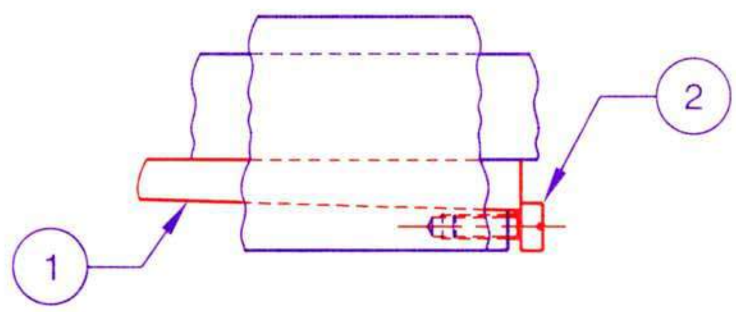

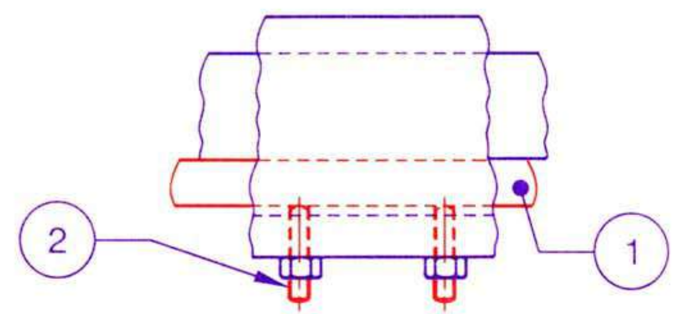

DRILLING MACHINE - ALIGNMENT GEOMETRY

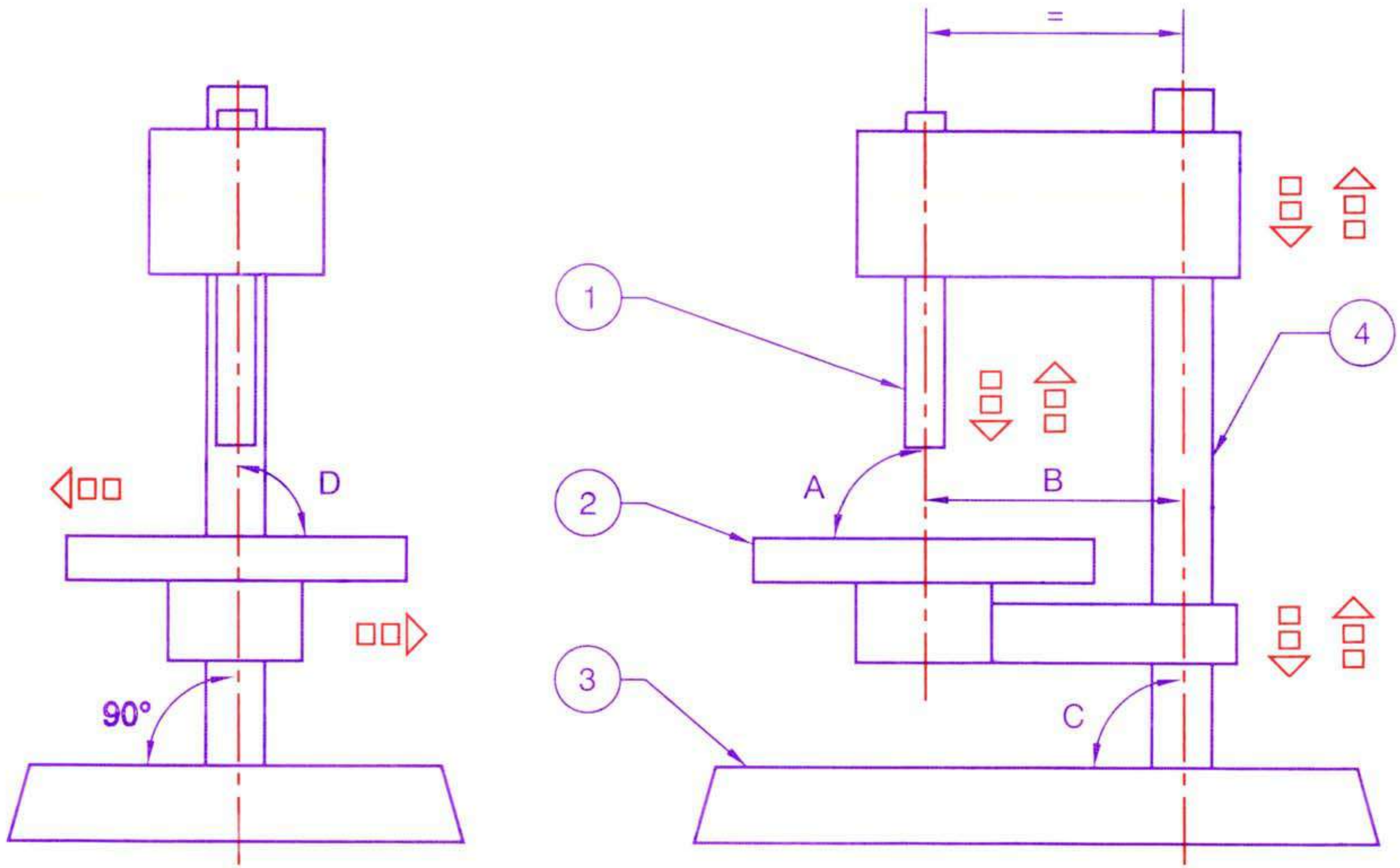

CIMI CENTRAL INSTRUCTIONAL MEDIA INSTITUTE, MADRAS
AN INDO-GERMAN PROJECT

gtz

TR 01 08 02 01 95

STANDARD PIPE FITTING ASSEMBLY

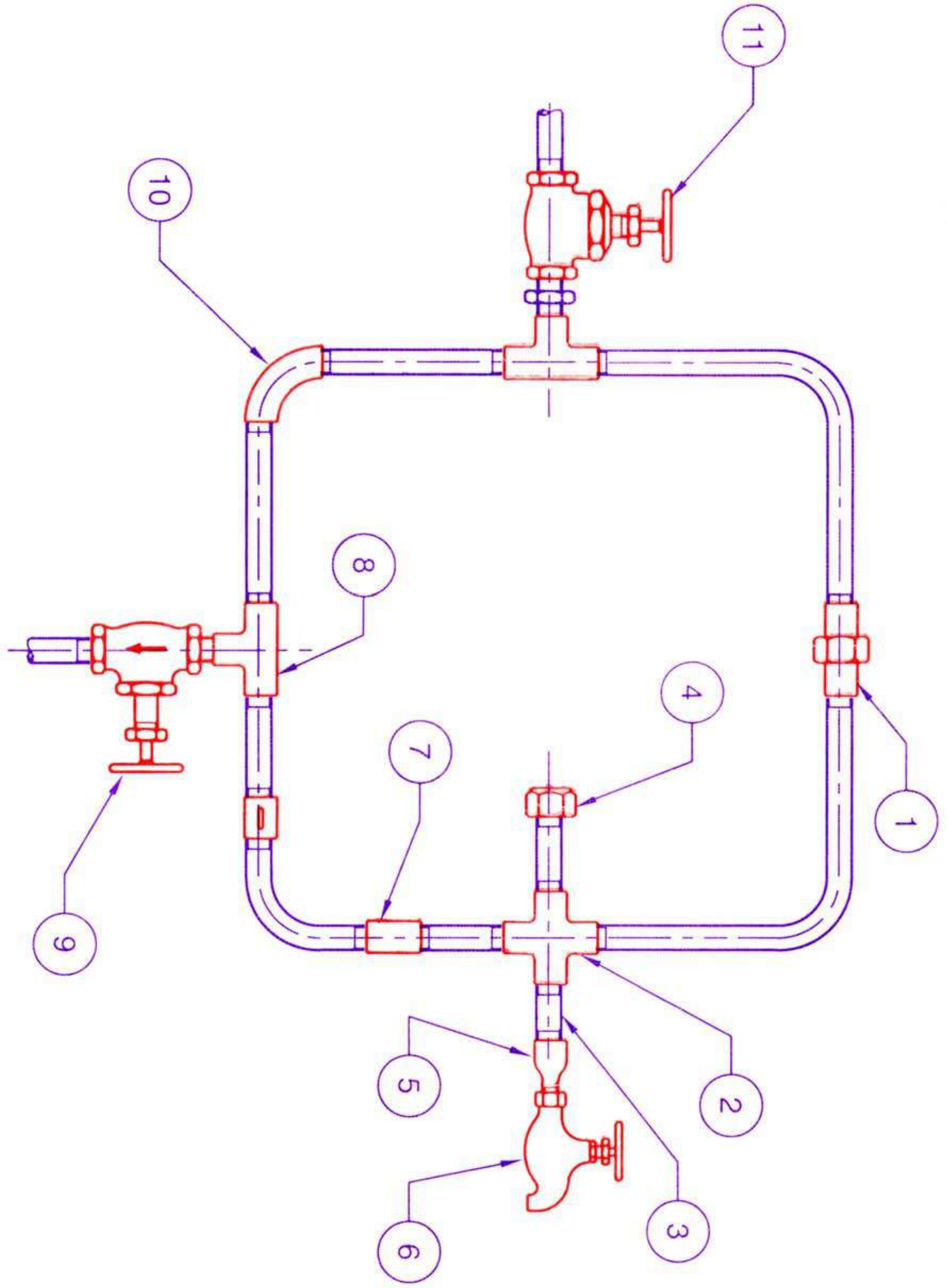

GLOBE VALVE - PARTS AND FUNCTION

Fig a

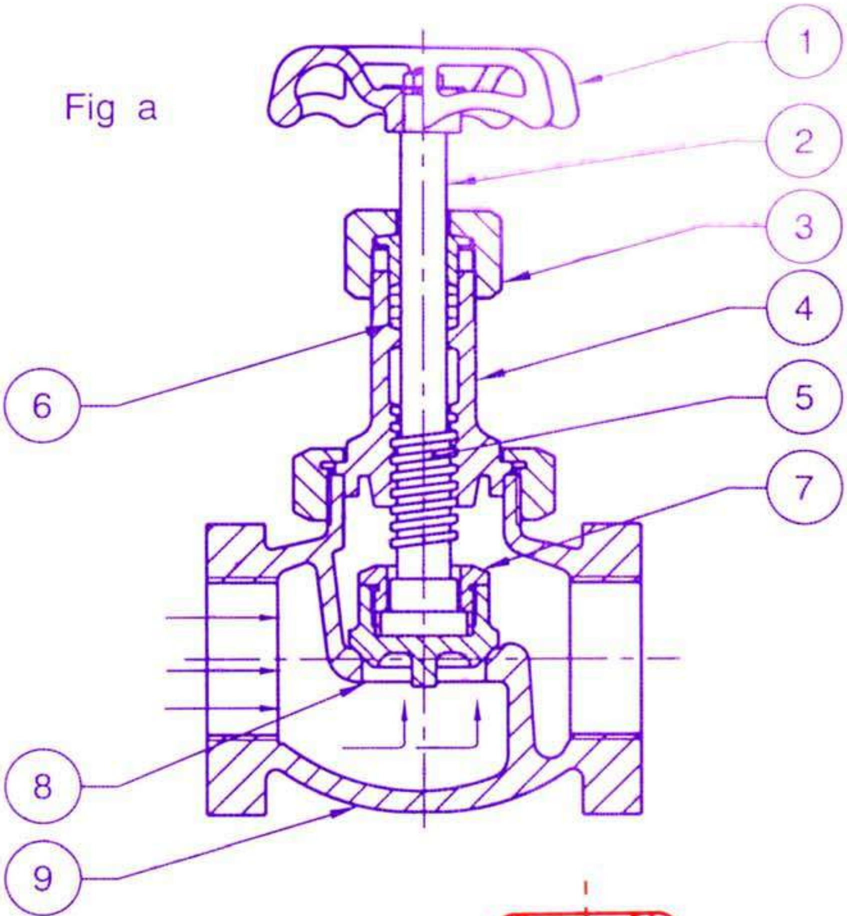

Fig b

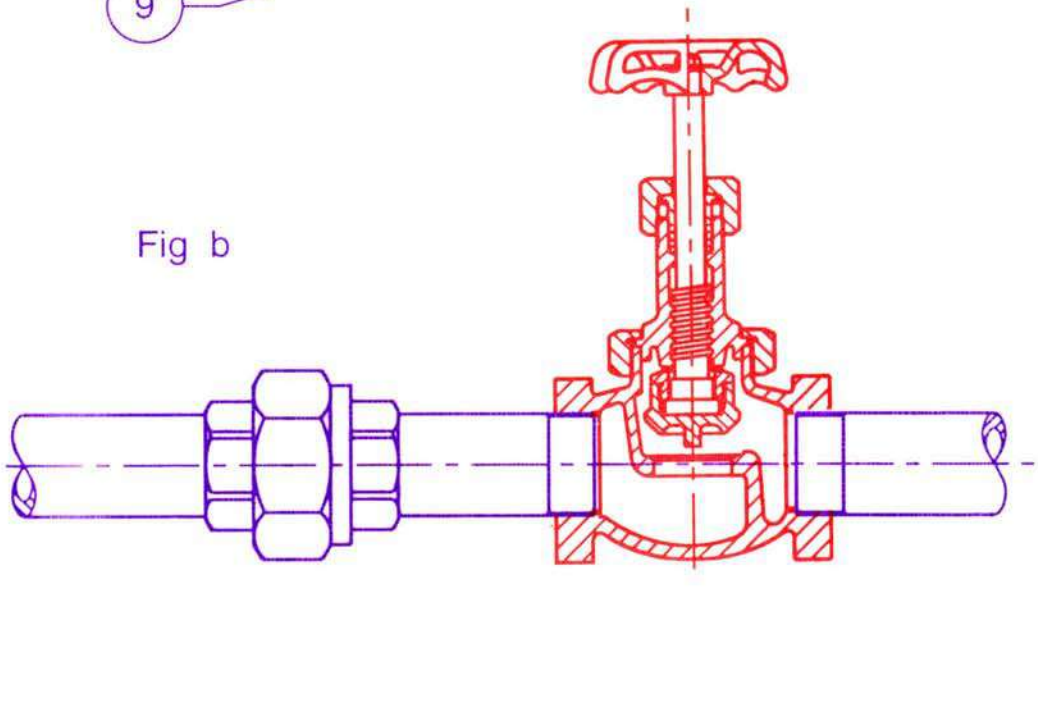

GATE VALVE - PARTS AND FUNCTION

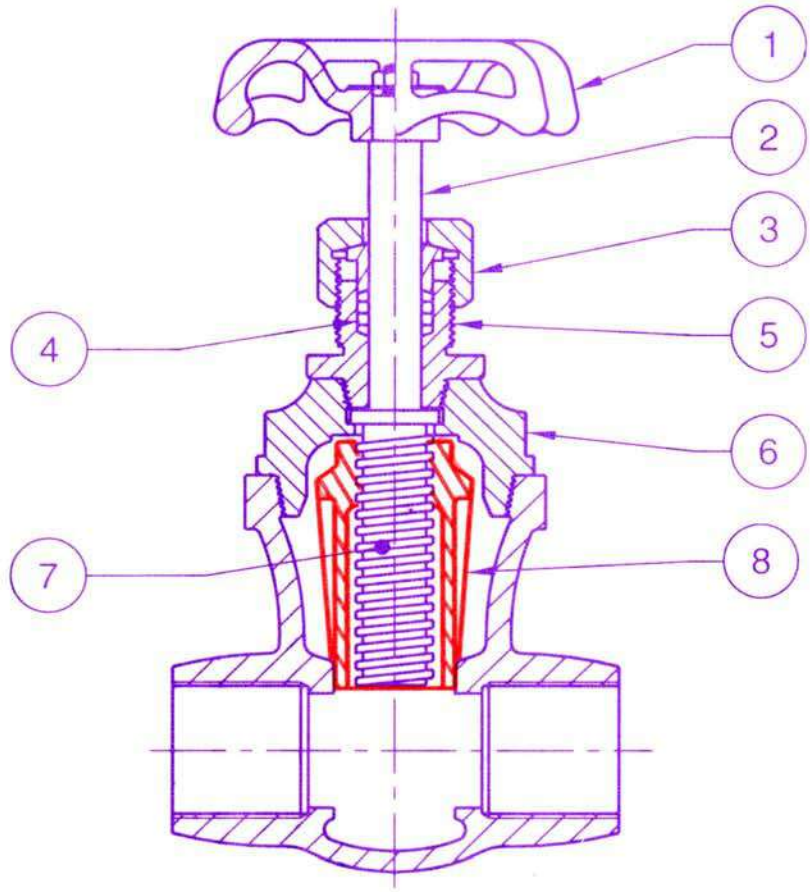

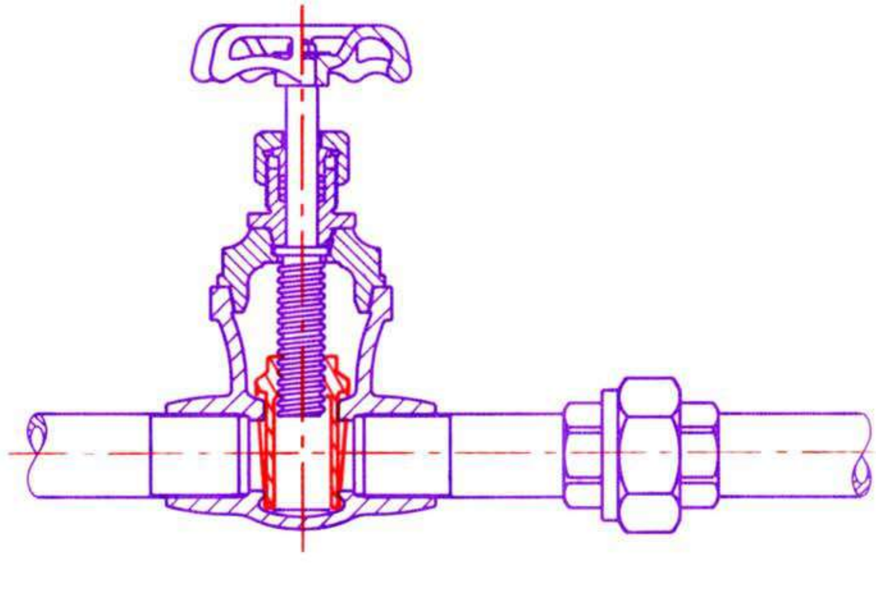

CIMI CENTRAL INSTRUCTIONAL MEDIA INSTITUTE, MADRAS
AN INDO-GERMAN PROJECT

TR 01 08 09 01 95

DRILLING MACHINE SPINDLE ASSEMBLY

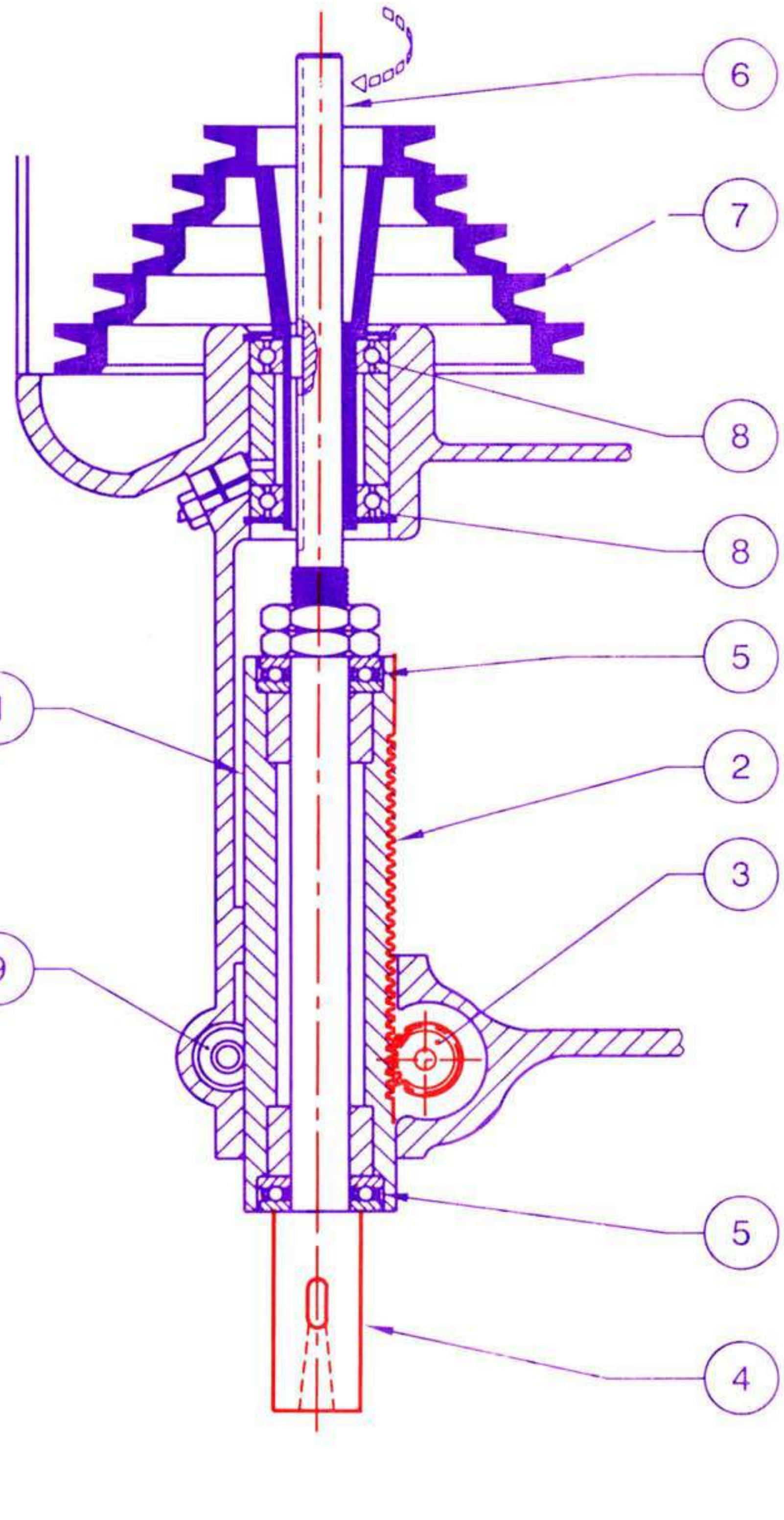

CIMI CENTRAL INSTRUCTIONAL MEDIA INSTITUTE, MADRAS
AN INDO-GERMAN PROJECT

TR 01 11 02 01 95

SPECIFICATION OF MACHINE SCREW - NUT AND STUD

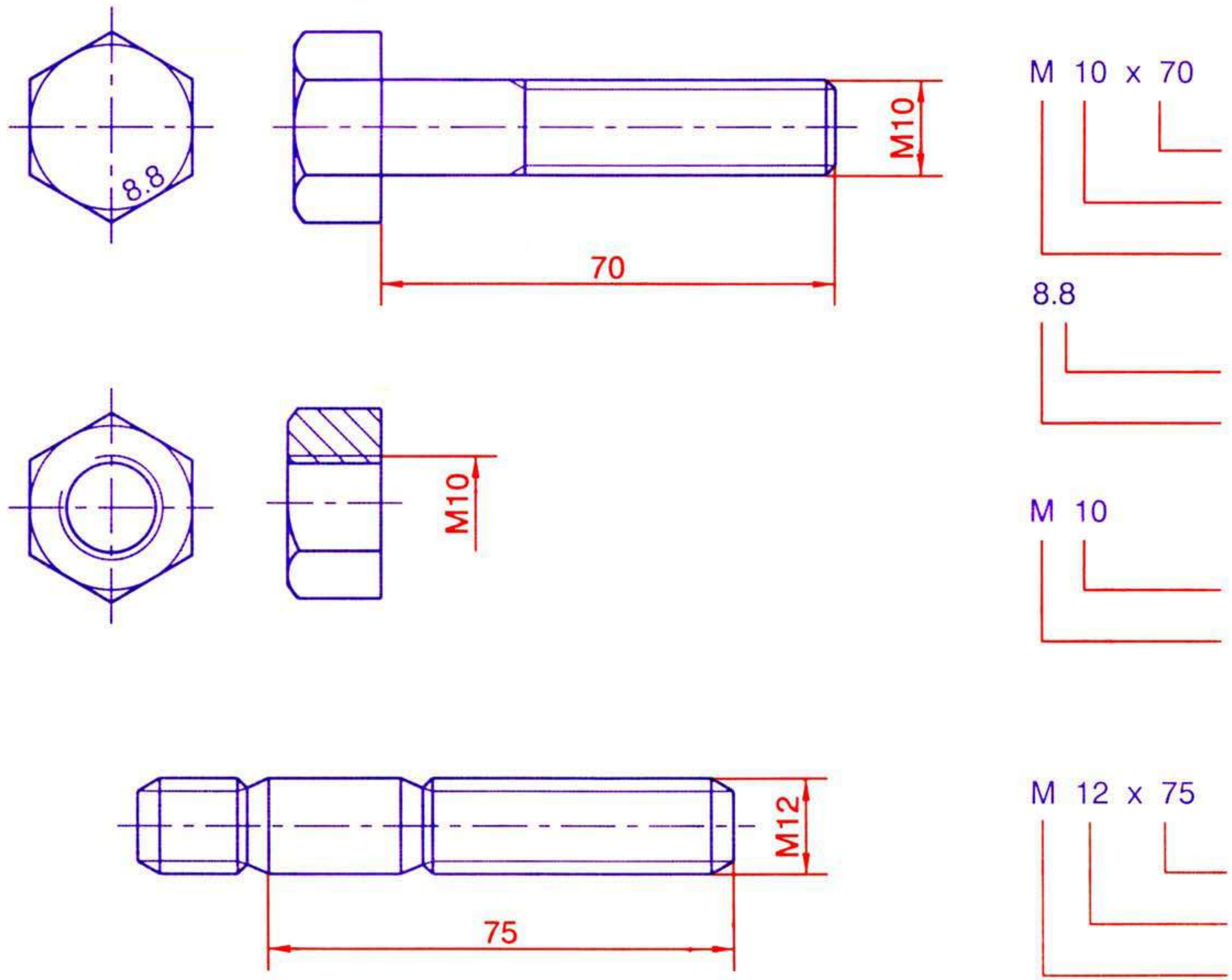

CIMI CENTRAL INSTRUCTIONAL MEDIA INSTITUTE, MADRAS
AN INDO-GERMAN PROJECT

gtz

TR 01 21 01 01 95

SEQUENCE FOR TIGHTENING NUTS IN ASSEMBLIES

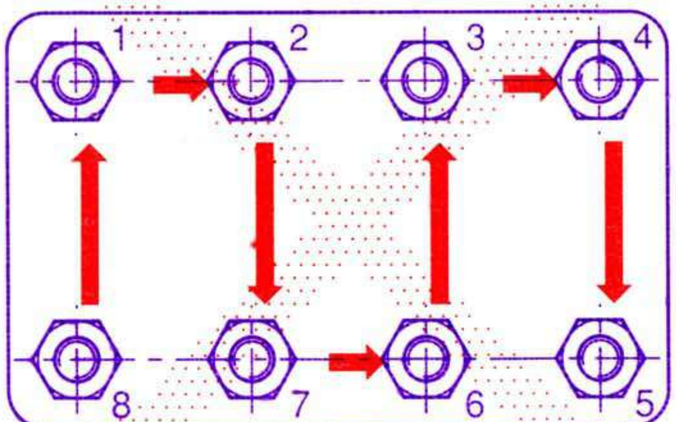

1.

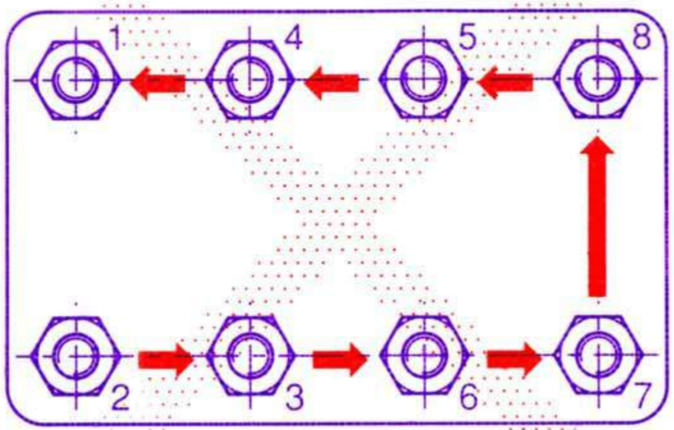

2.

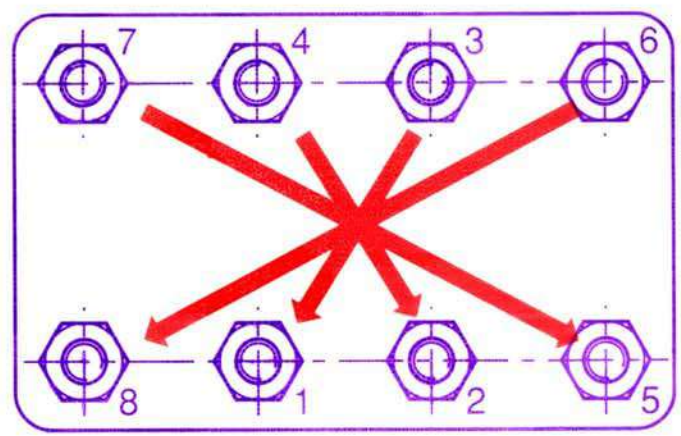

3.

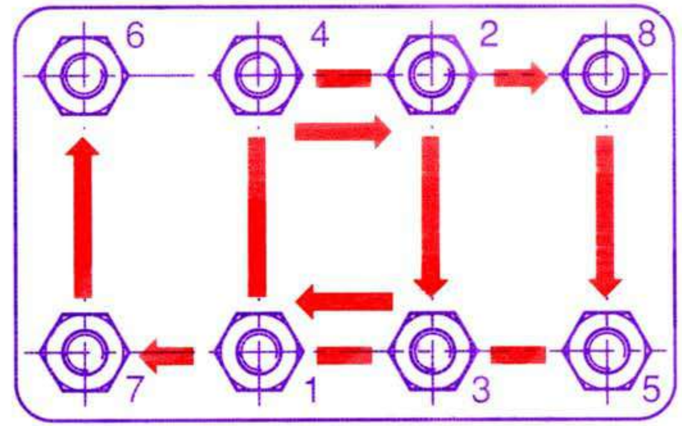

4.

REPAIRING DAMAGED INTERNAL THREADS

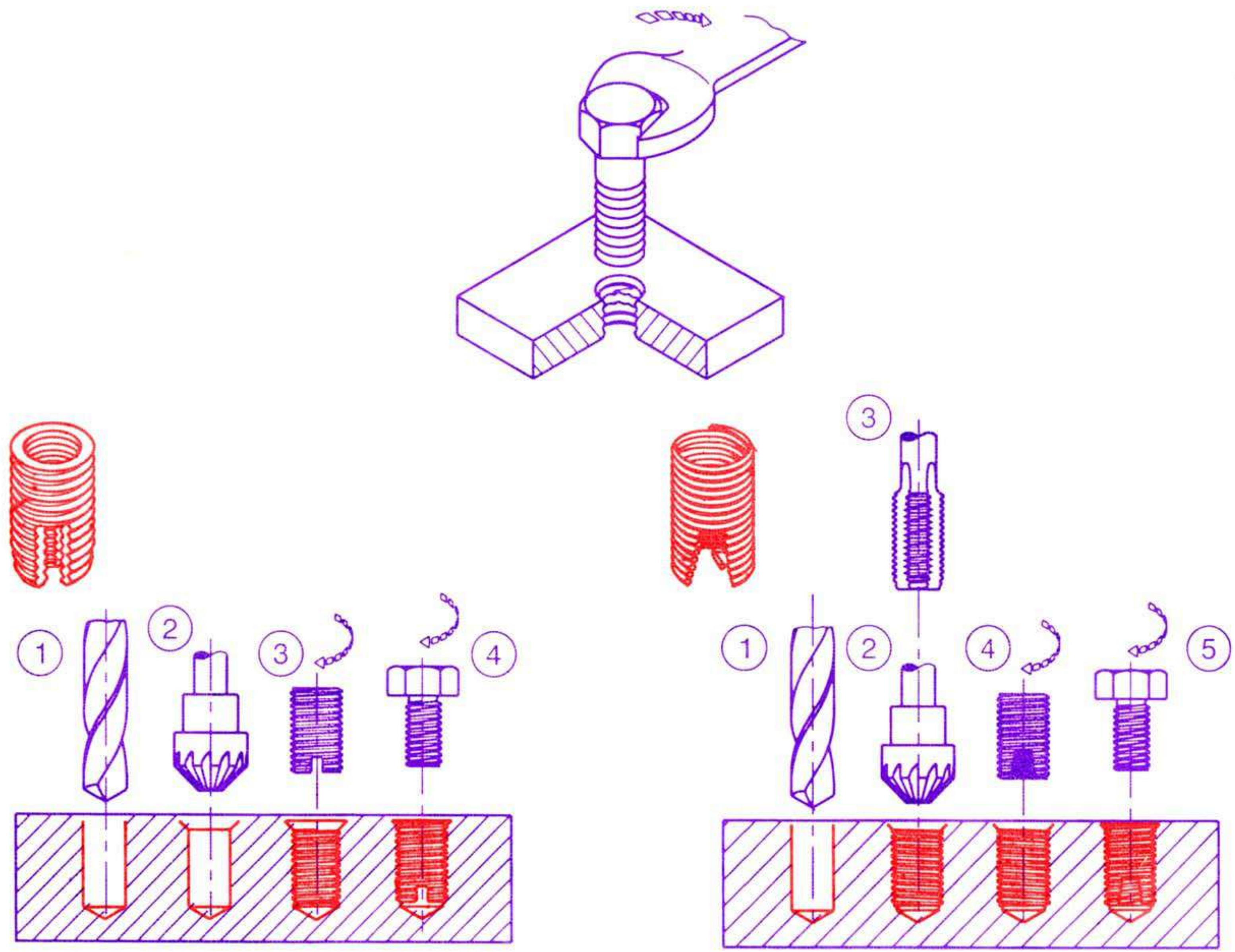

EXTRACTING BROKEN BOLTS FROM HOLES

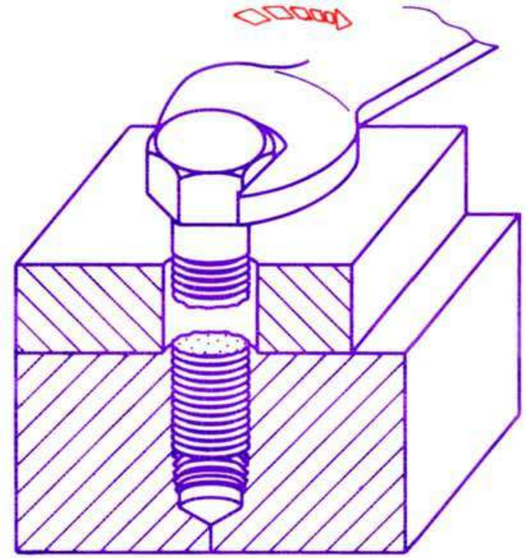

A. EXTRACTOR

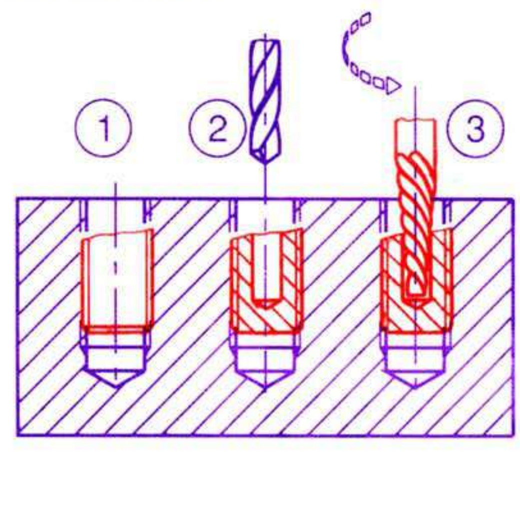

B. SLOTTING

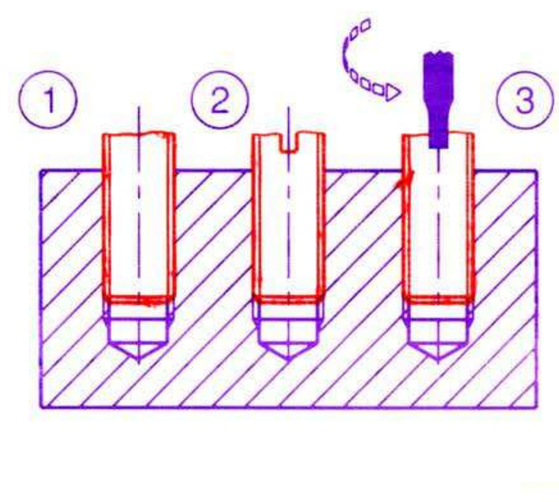

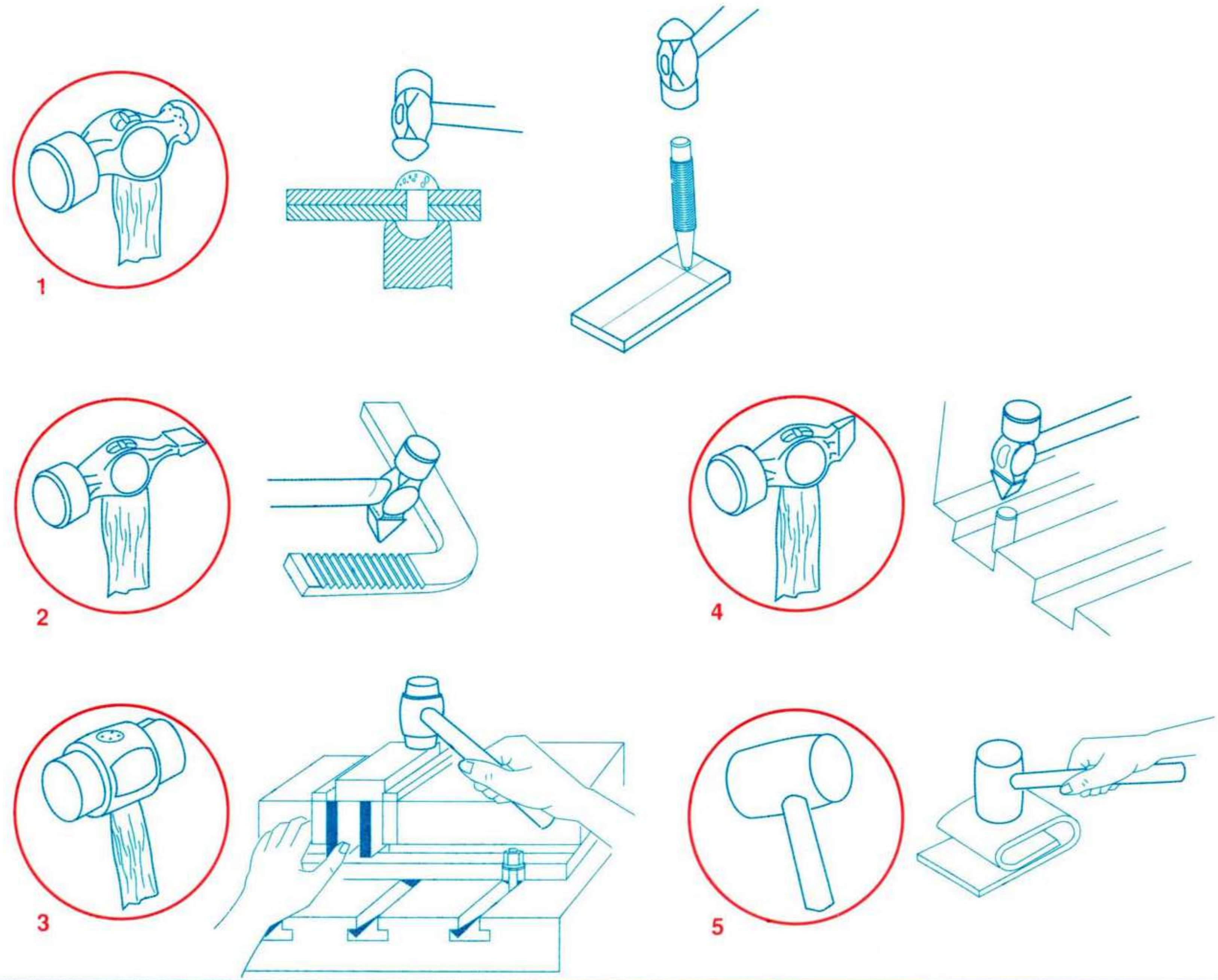

HAND HAMMERS - APPLICATIONS

TR 01 01 01 01 93

CIMI CENTRAL INSTRUCTIONAL MEDIA INSTITUTE, MADRAS
AN INDO-GERMAN PROJECT

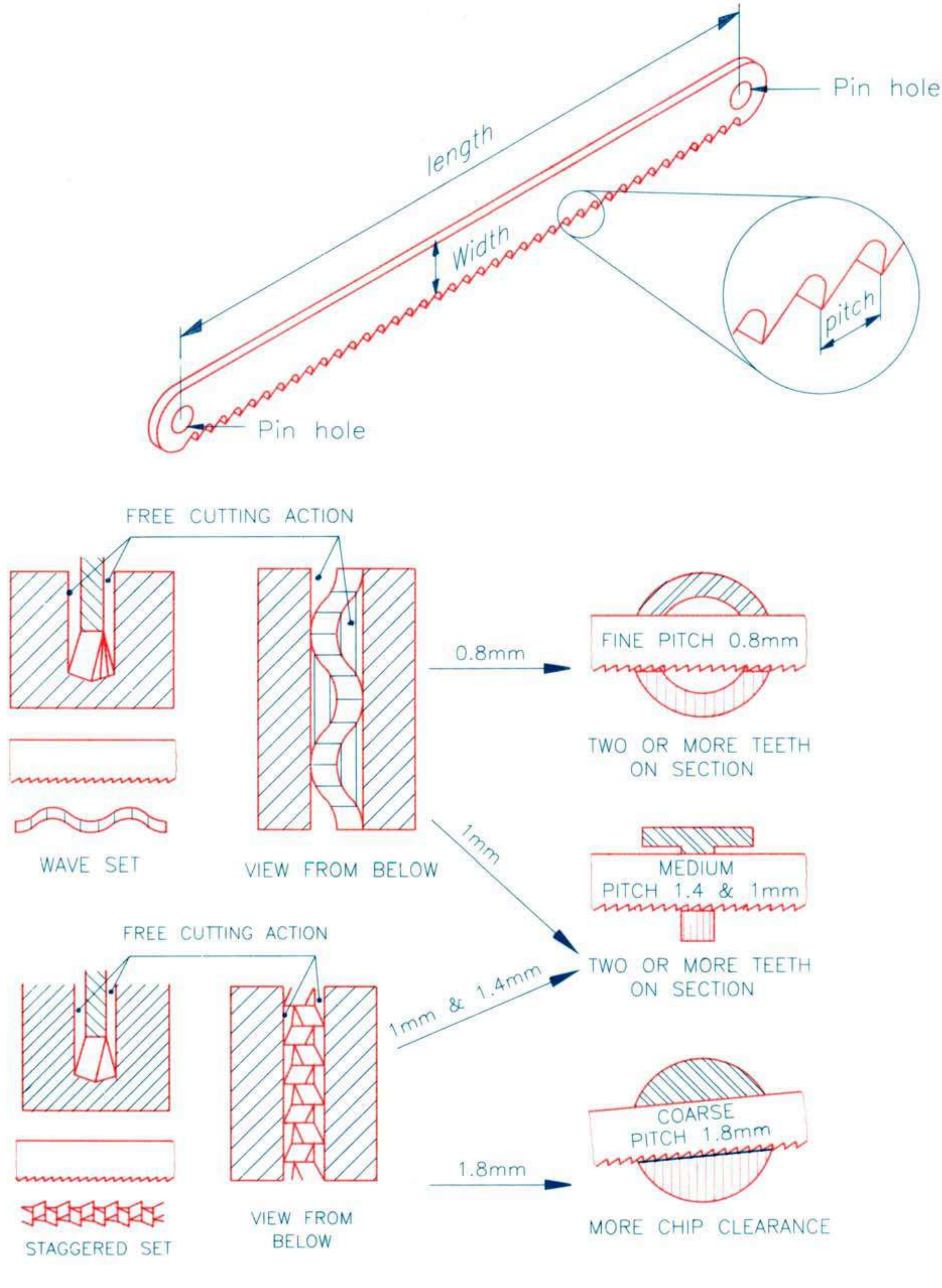

HACKSAW BLADE – SELECTION

TR 01 01 01 02 93

CIMI CENTRAL INSTRUCTIONAL MEDIA INSTITUTE, MADRAS
AN INDO-GERMAN PROJECT

SINGLE CUT

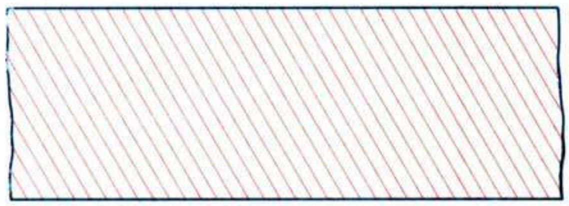

DOUBLE CUT

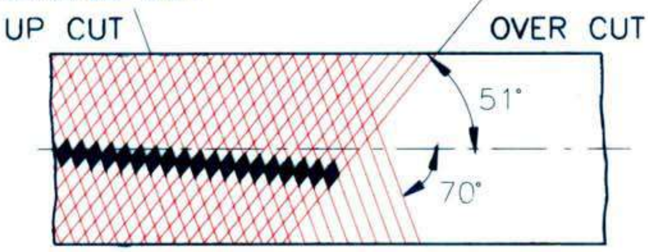

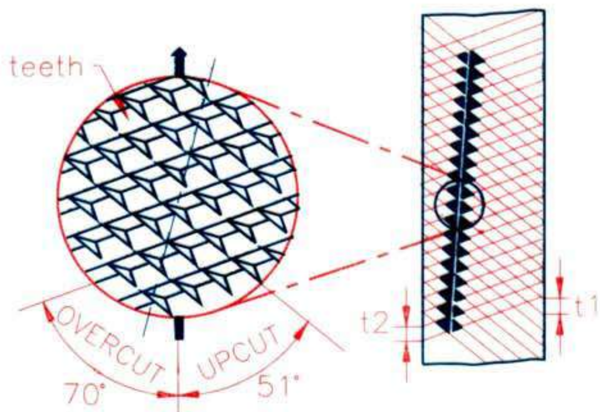

CURVED CUT

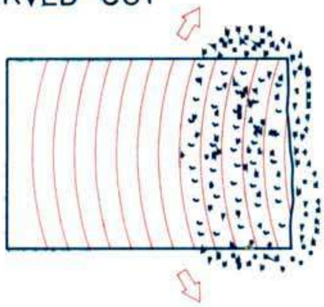

CHISEL CUT

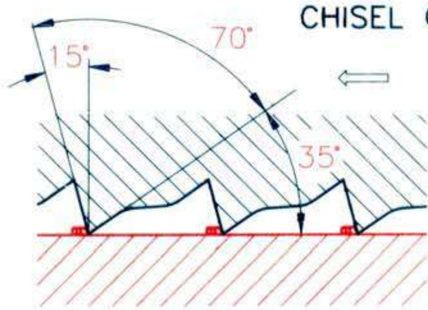

RASP CUT

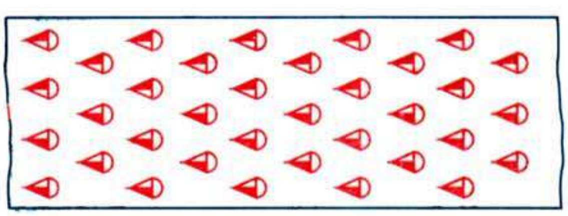

MILL CUT

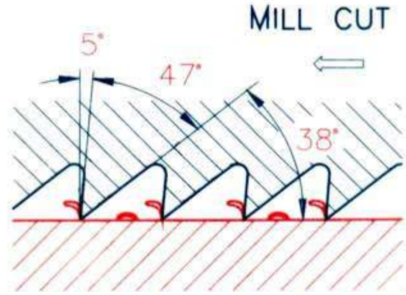

CUT OF FILES

TR 01 01 01 03 93

CIMI CENTRAL INSTRUCTIONAL MEDIA INSTITUTE, MADRAS
AN INDO-GERMAN PROJECT

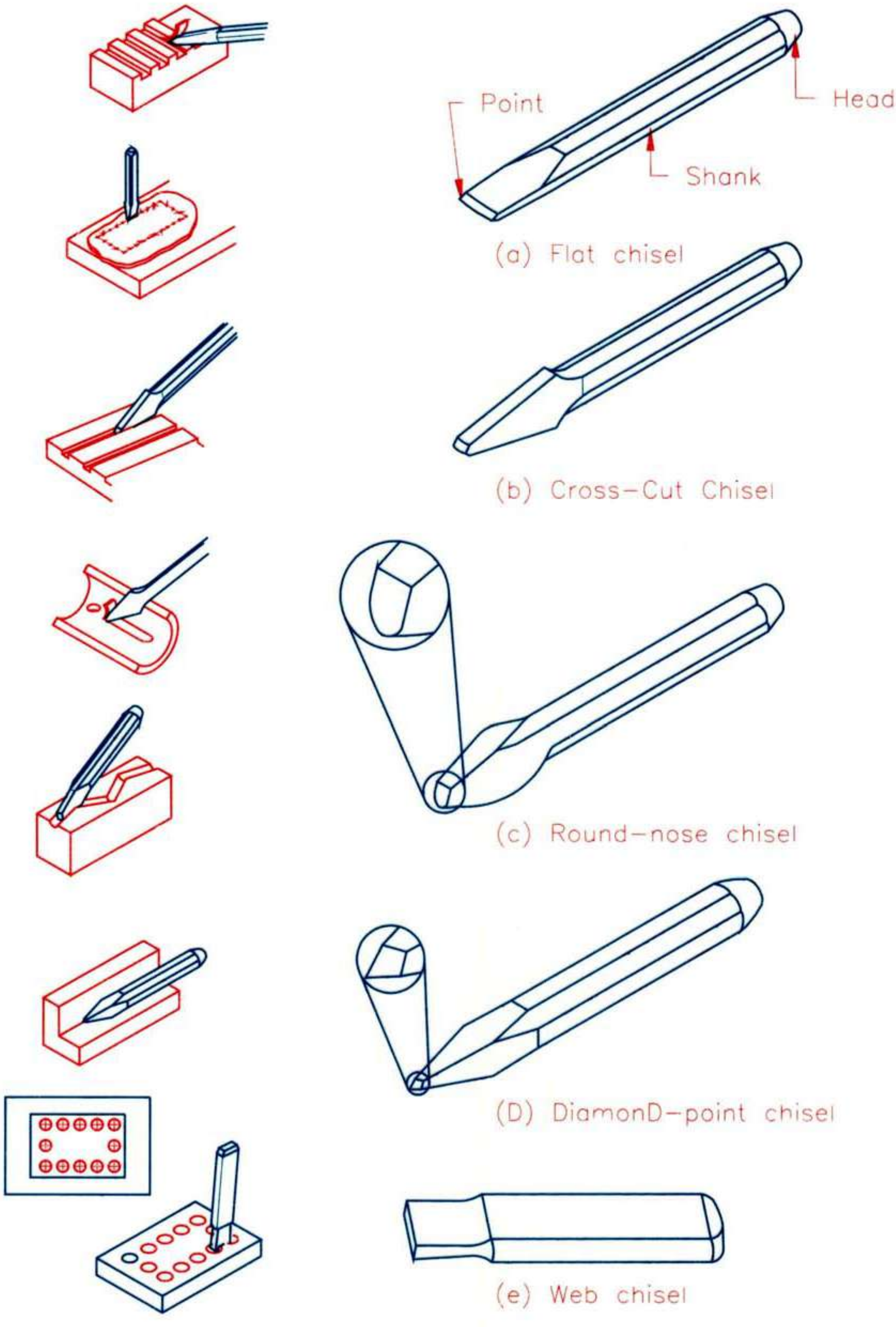

(a) Flat chisel

(b) Cross-Cut Chisel

(c) Round-nose chisel

(D) DiamonD-point chisel

(e) Web chisel

TYPES OF CHISELS AND APPLICATION	TR 01 01 01 04 93	CIMI CENTRAL INSTRUCTIONAL MEDIA INSTITUTE, MADRAS AN INDO-GERMAN PROJECT

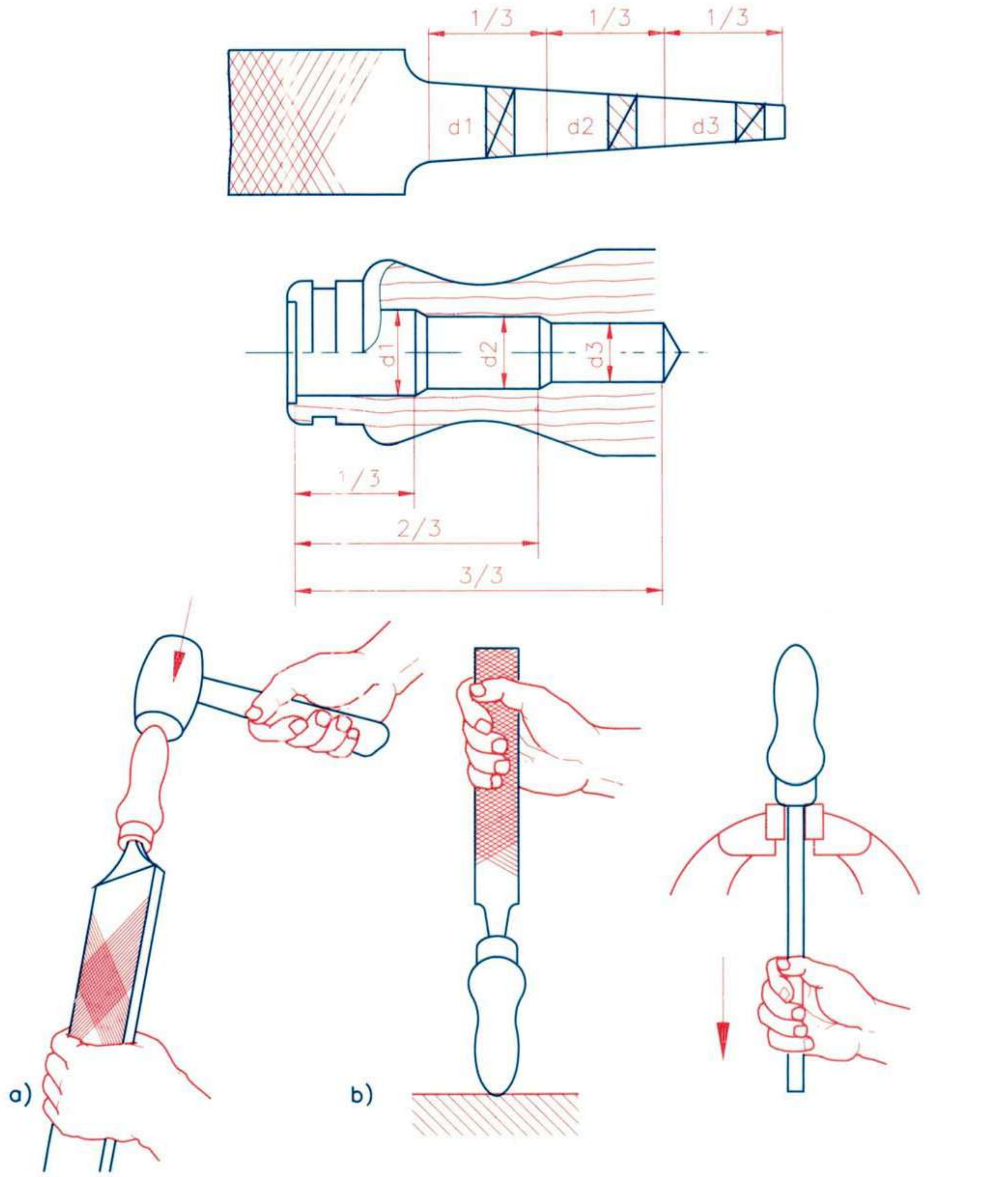

FIXING FILE HANDLES

TR 01 01 01 05 93

CIMI CENTRAL INSTRUCTIONAL MEDIA INSTITUTE, MADRAS
AN INDO-GERMAN PROJECT

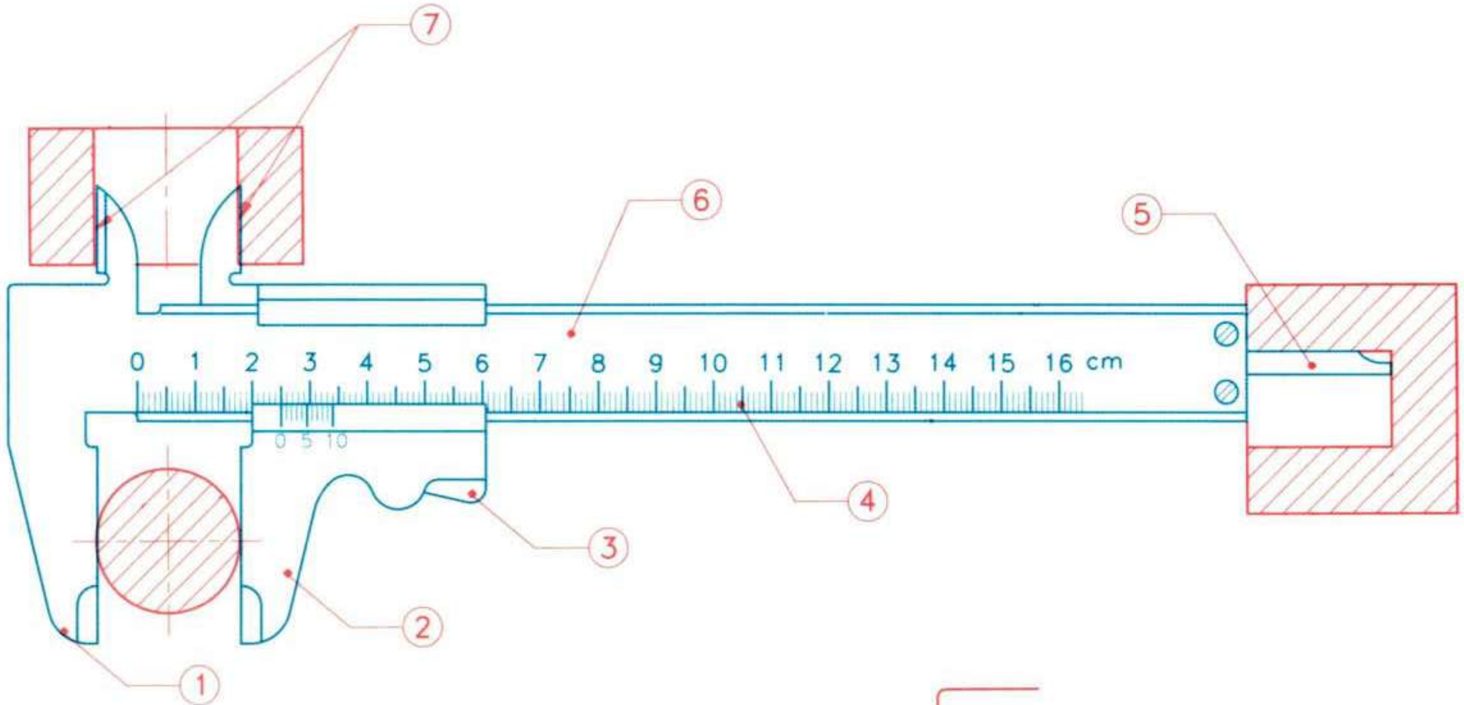

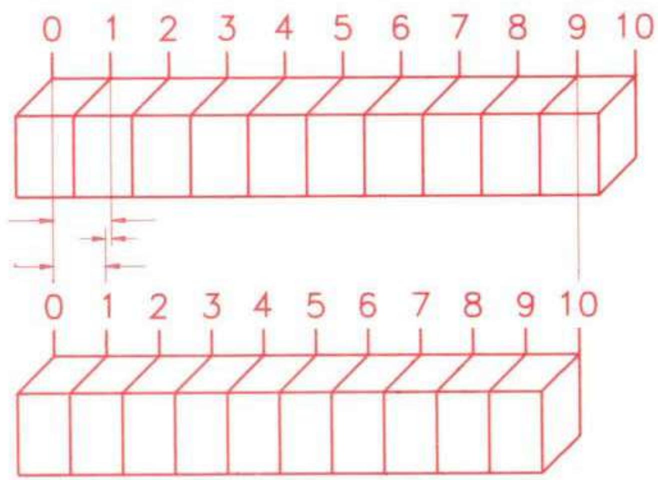

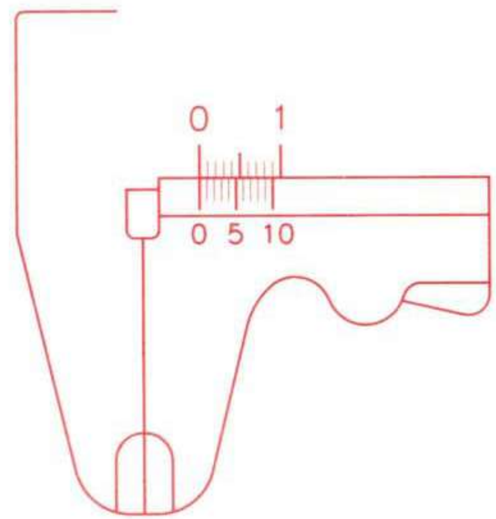

VERNIER CALIPER PARTS AND PRINCIPLE

TR 01 02 01 01 93

CIMI CENTRAL INSTRUCTIONAL MEDIA INSTITUTE, MADRAS
AN INDO-GERMAN PROJECT

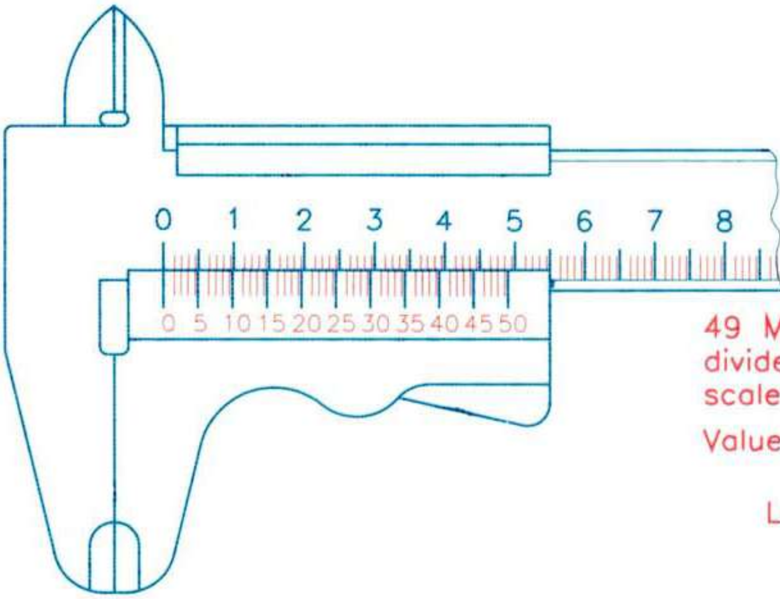

49 Main scale divisions are divided into 50 vernier scale divisions

Value of 1 VSD $= \frac{49}{50}$ mm

Least count = 1 MD − 1 VSD

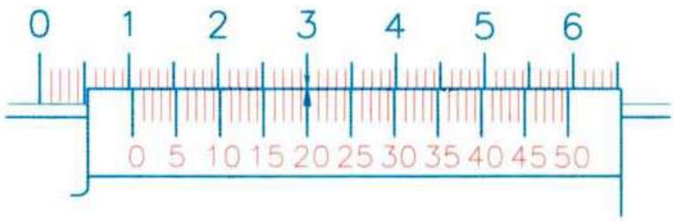

Main scale reading =

Value of coinciding vernier division } =

Reading =

Assignments:—

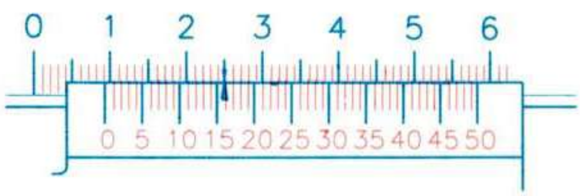

A Reading

B Reading

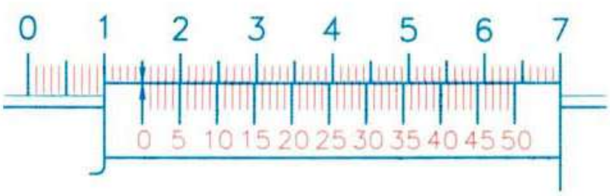

C Reading

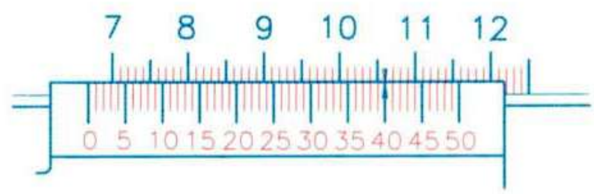

D Reading

READING OF VERNIER CALIPER	TR 01 02 01 02 93	CIMI CENTRAL INSTRUCTIONAL MEDIA INSTITUTE, MADRAS AN INDO-GERMAN PROJECT

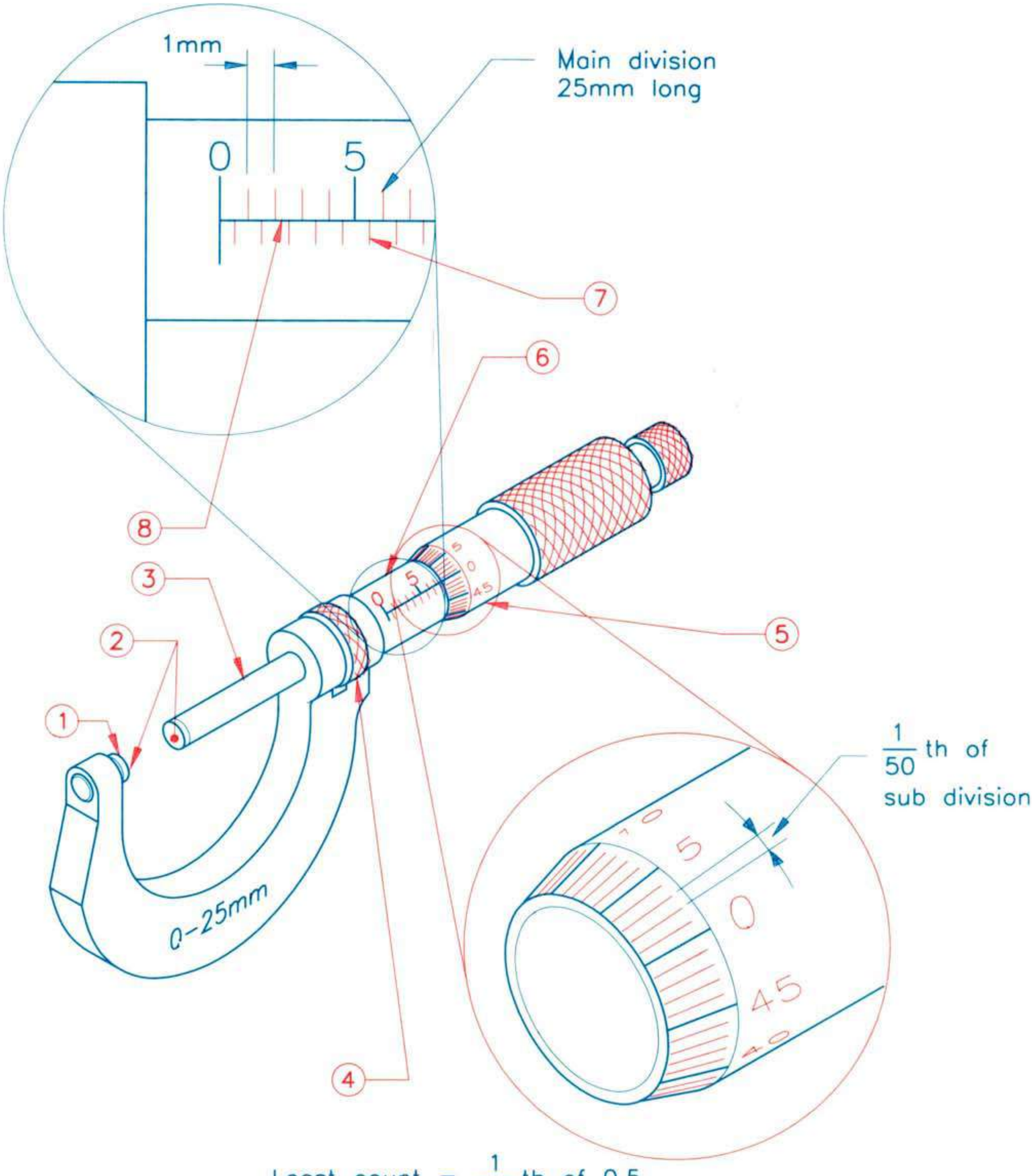

Least count = $\frac{1}{50}$ th of 0.5

=

MICROMETER PARTS AND GRADUATIONS

TR 01 02 02 01 93

CIMI CENTRAL INSTRUCTIONAL MEDIA INSTITUTE, MADRAS
AN INDO-GERMAN PROJECT

Micrometer graduations

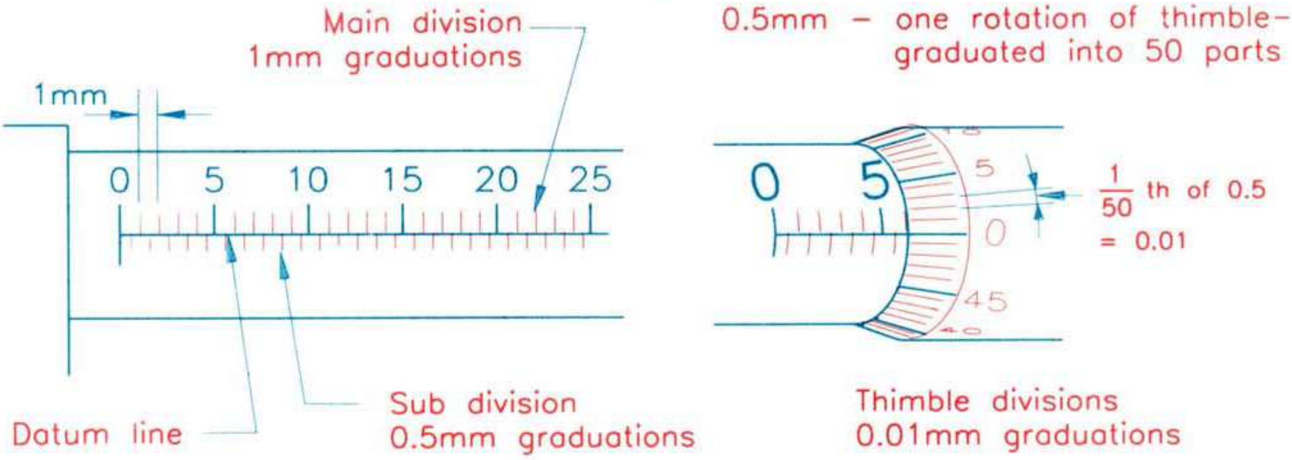

Micrometer reading

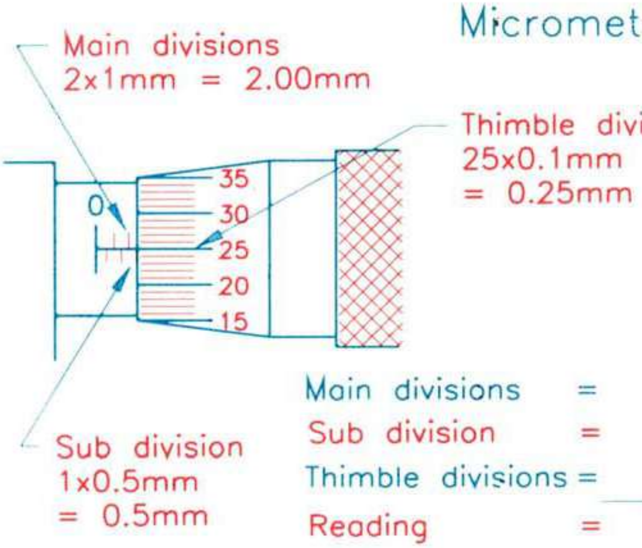

Main divisions =
Sub division =
Thimble divisions =
Reading =

Example

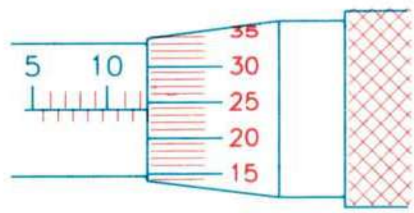

Main divisions =
Sub division =
Thimble divisions =
Reading =

Assignments:–

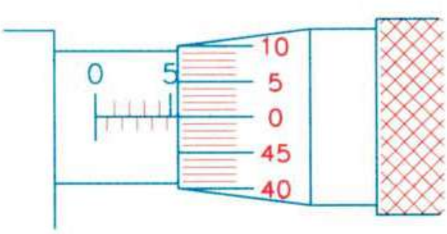

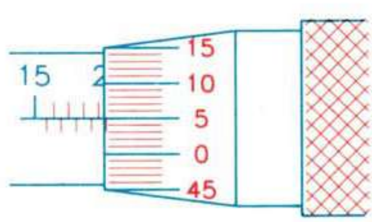

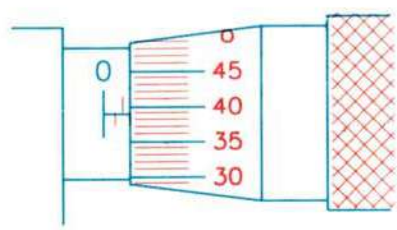

A Reading

B Reading

C Reading

MICROMETER READING | TR 01 02 02 02 93 | CIMI CENTRAL INSTRUCTIONAL MEDIA INSTITUTE, MADRAS AN INDO-GERMAN PROJECT

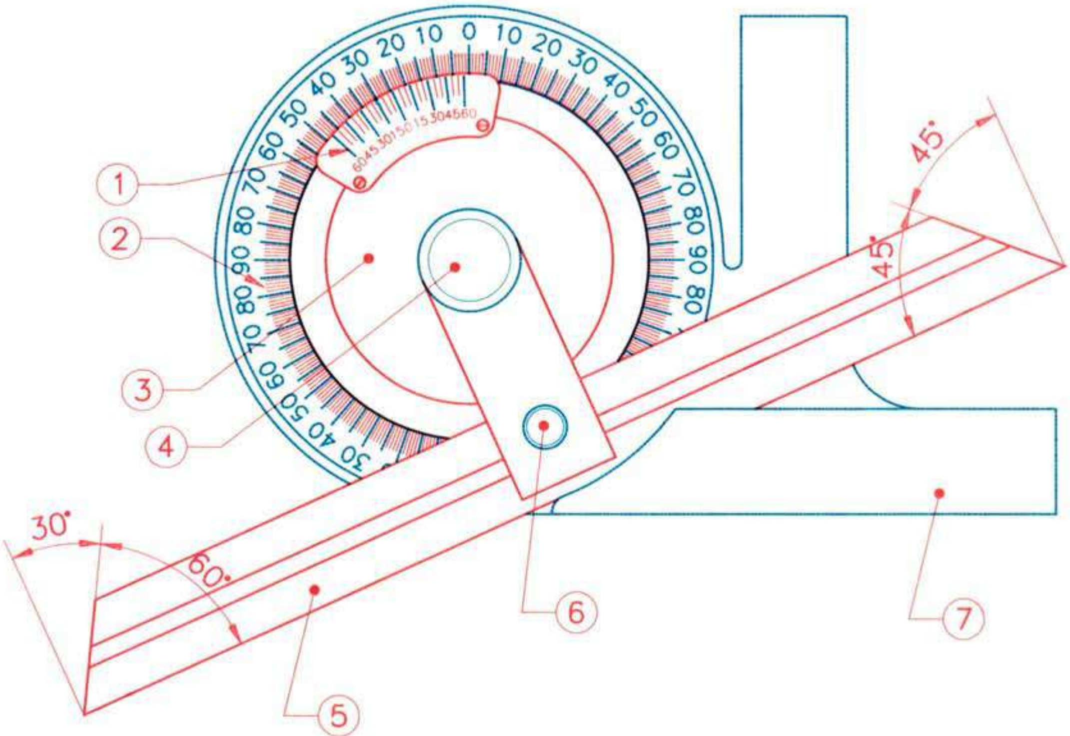

Applications:–

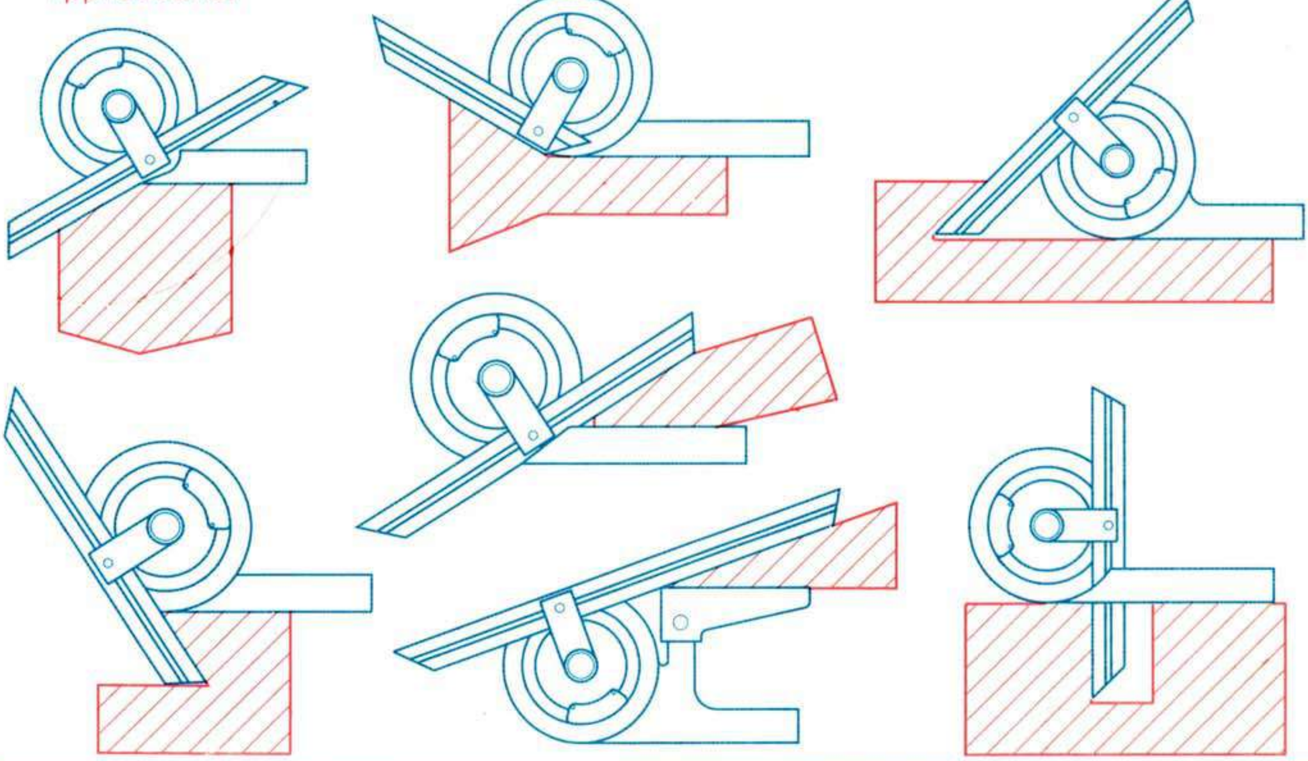

VERNIER BEVEL PROTRACTOR
PARTS & APPLICATION

TR 01 02 03 01 93

CIMI CENTRAL INSTRUCTIONAL MEDIA INSTITUTE, MADRAS
AN INDO-GERMAN PROJECT

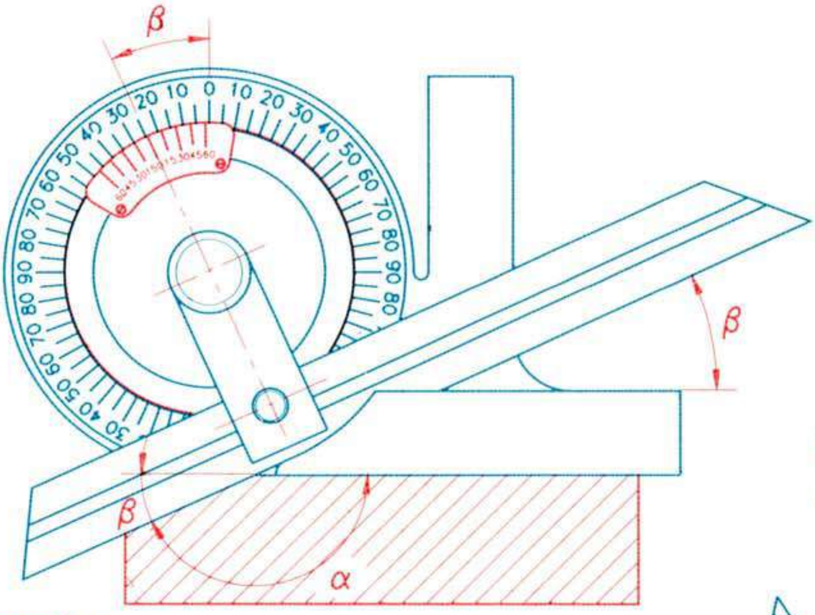

Assignments:-

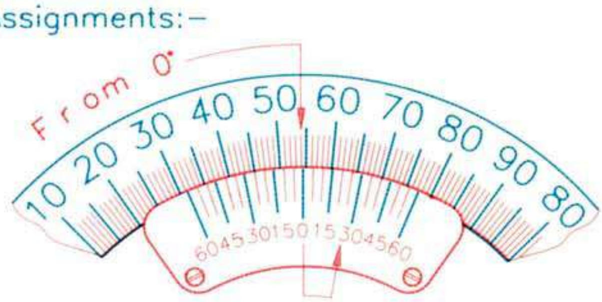

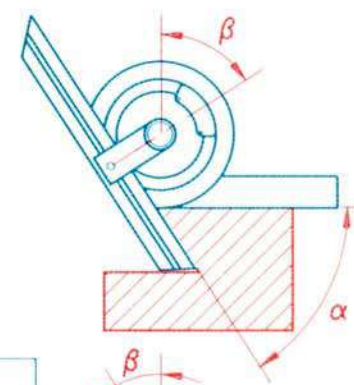

A Reading

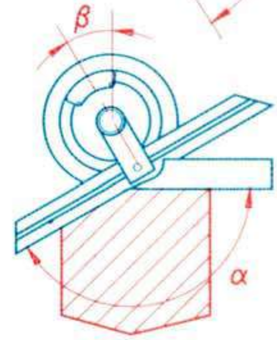

B Reading

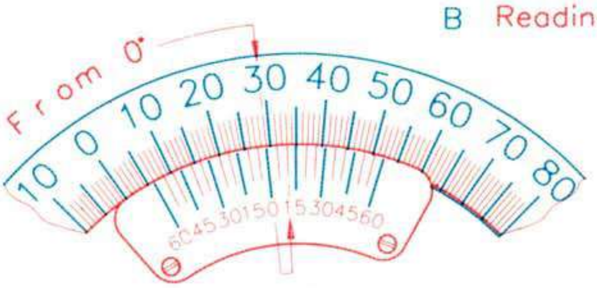

C Reading

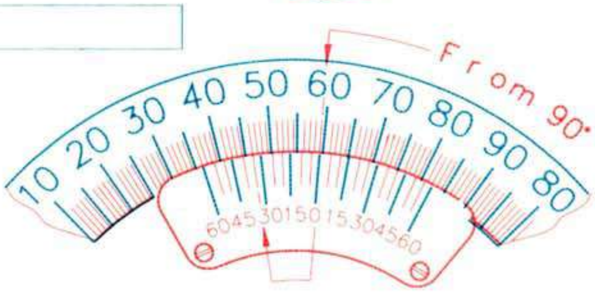

D Reading

BEVEL PROTRACTOR READING

TR 01 02 03 02 93

CIMI CENTRAL INSTRUCTIONAL MEDIA INSTITUTE, MADRAS
AN INDO-GERMAN PROJECT

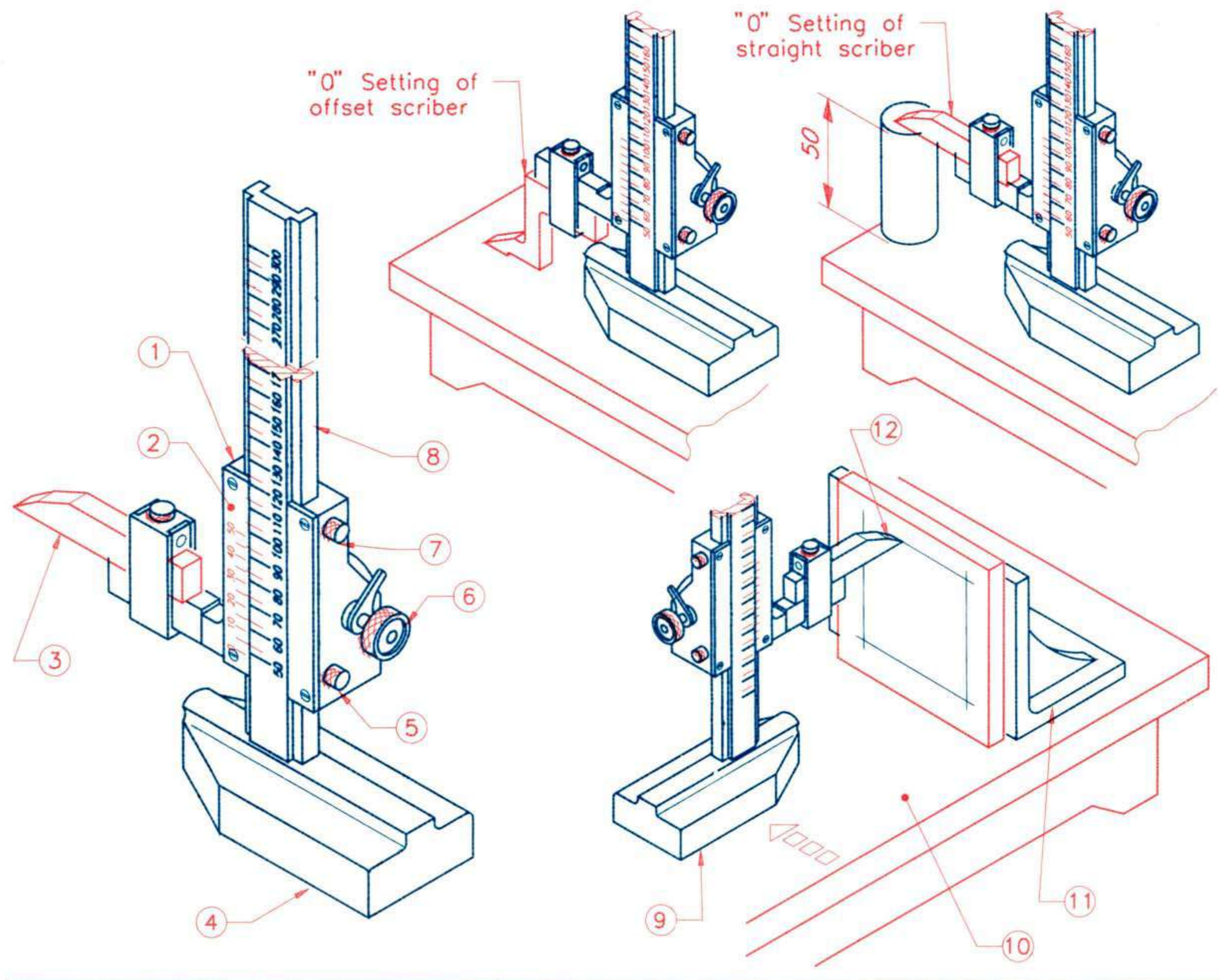

VERNIER HEIGHT GAUGE

TR 01 02 04 01.93

CIMI CENTRAL INSTRUCTIONAL MEDIA INSTITUTE, MADRAS
AN INDO-GERMAN PROJECT

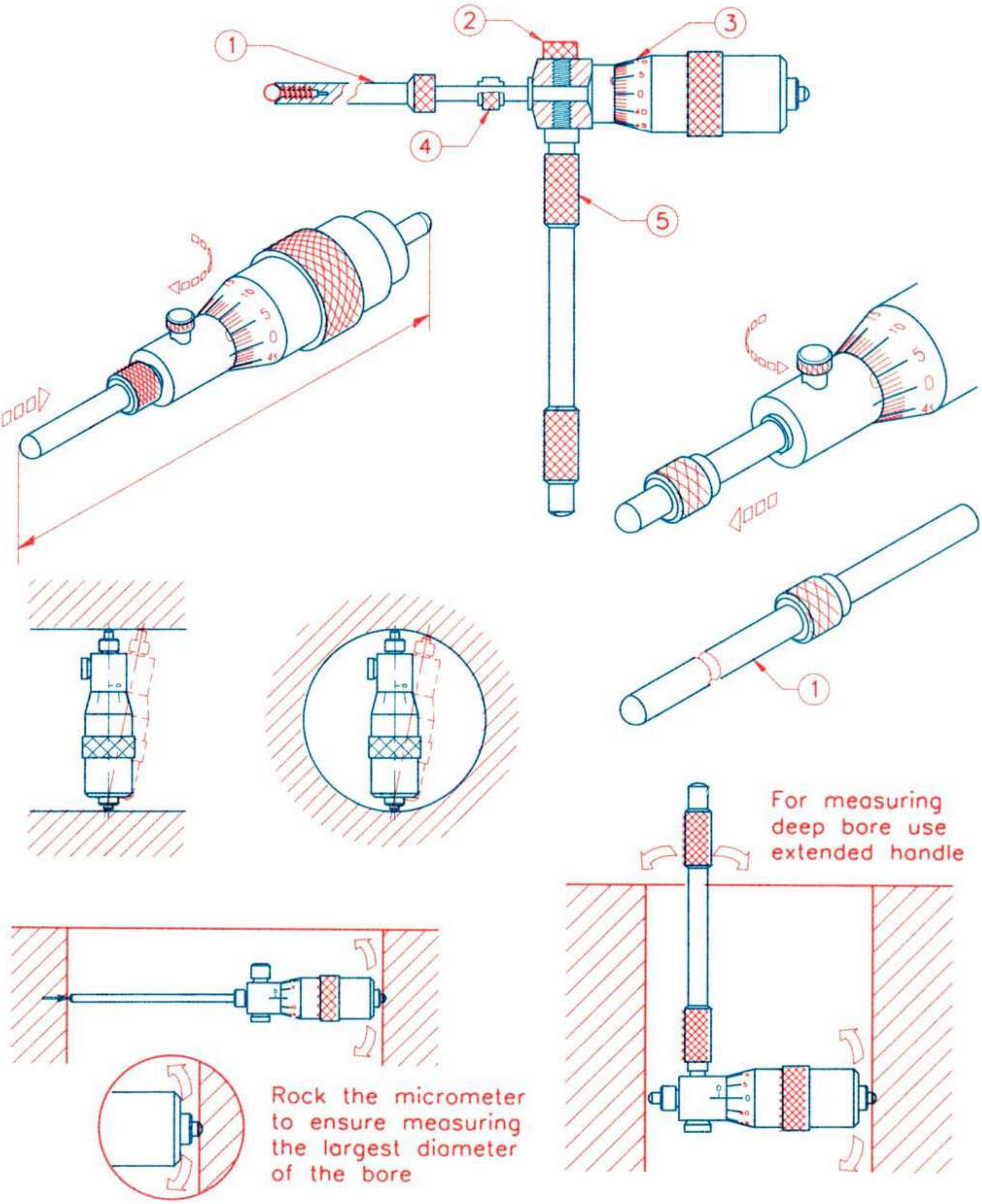

INSIDE MICROMETER

TR 01 02 05 01 93

CIMI CENTRAL INSTRUCTIONAL MEDIA INSTITUTE, MADRAS
AN INDO-GERMAN PROJECT

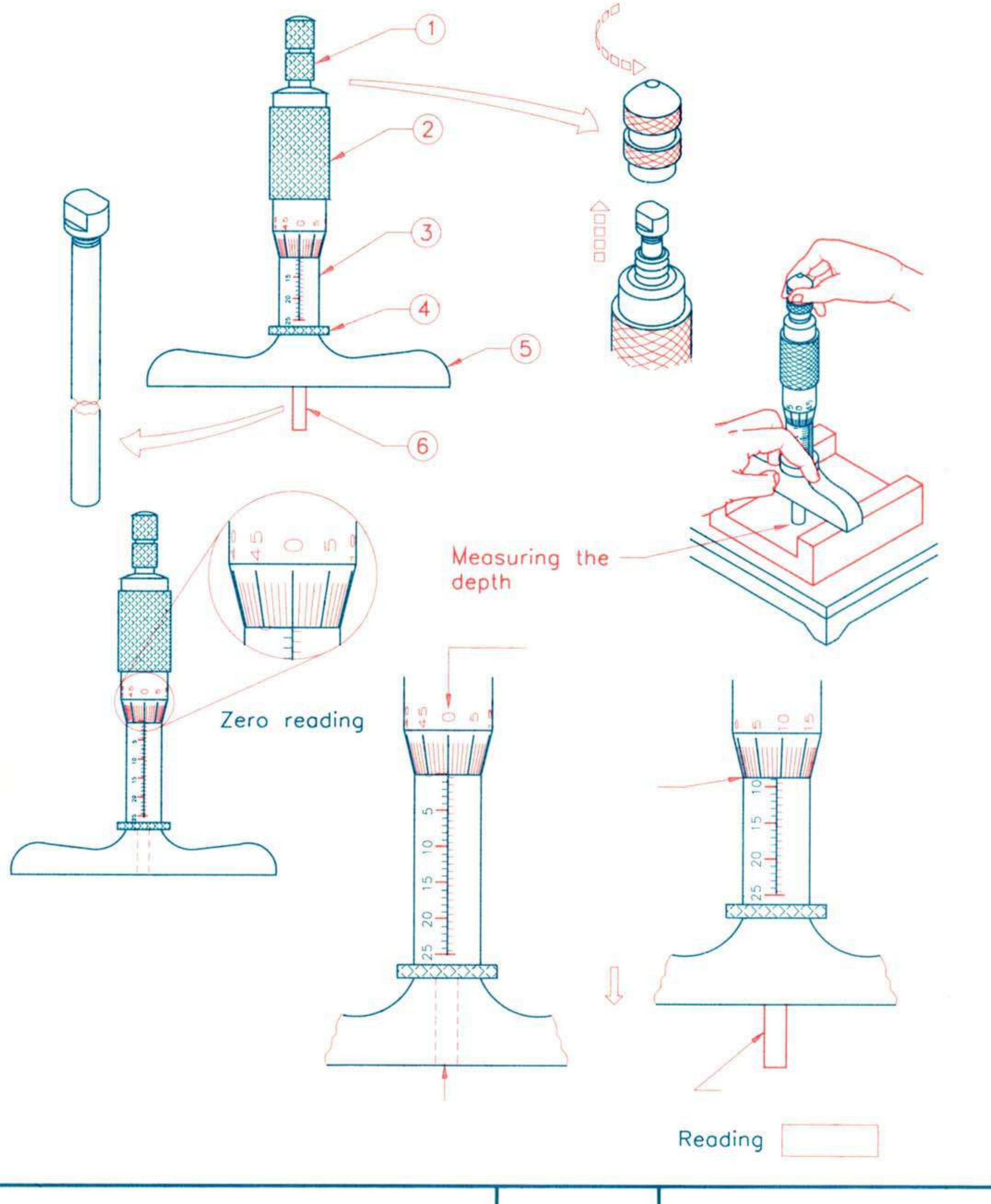

DEPTH MICROMETER

TR 01 02 06 01 93

CIMI CENTRAL INSTRUCTIONAL MEDIA INSTITUTE, MADRAS
AN INDO-GERMAN PROJECT

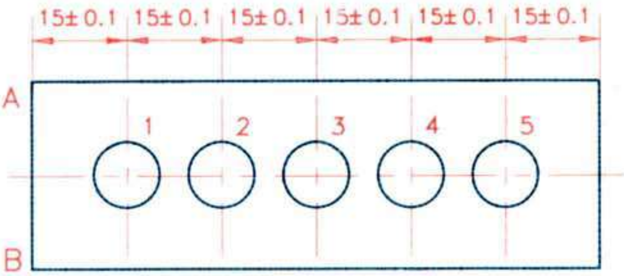

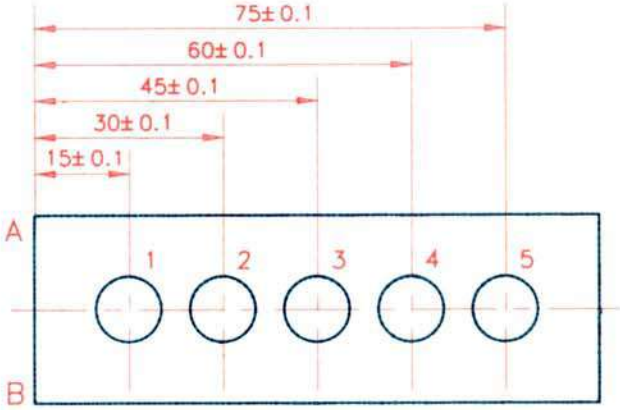

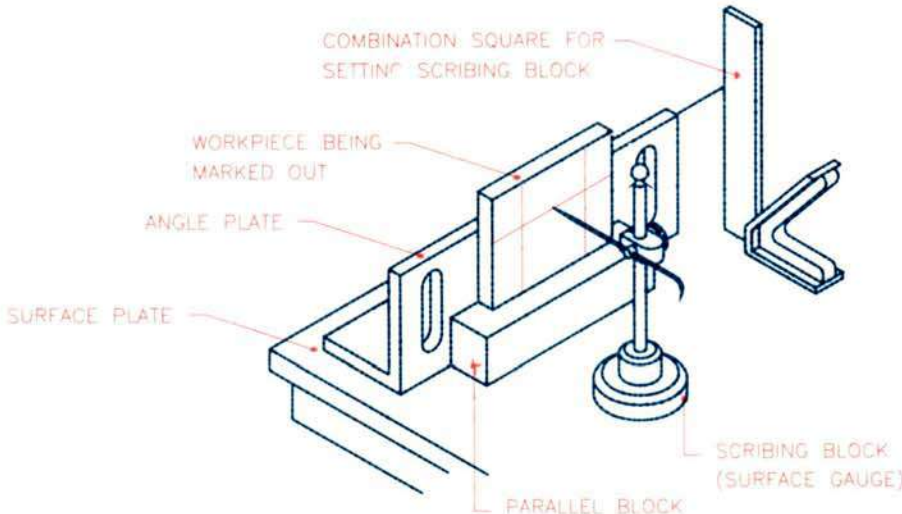

POINT DATUM

EDGE DATUM

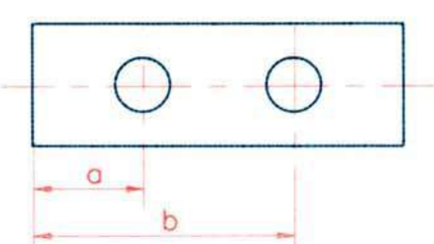

LINE DATUM

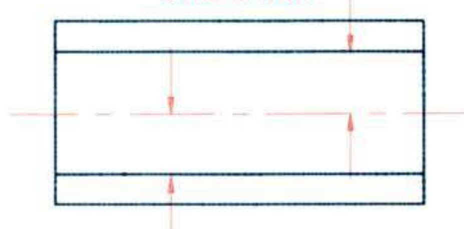

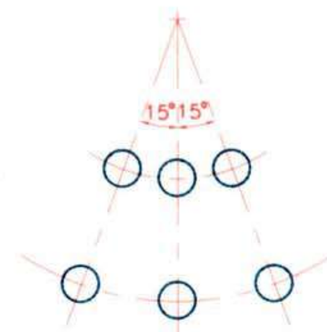

DATUM – CUMULATIVE ERROR	TR 01 02 09 01 93	CIMI CENTRAL INSTRUCTIONAL MEDIA INSTITUTE, MADRAS AN INDO-GERMAN PROJECT

51-A-46-H-5-V-8

Type of abrasive

A - Aluminium oxide
C - Silicon carbide

51-A-46-H-5-V-8

Grain size : (grit)
The actual size of
the abrasive grain

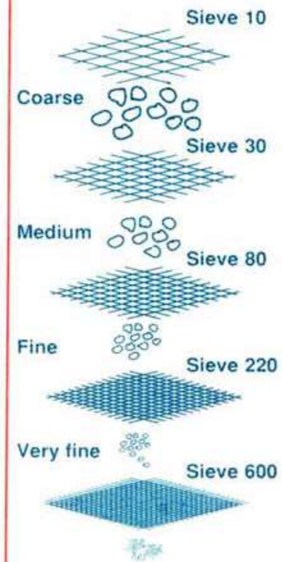

51-A-46-H-5-V-8

Grade :
The strength of the
bond holds the grain
in position

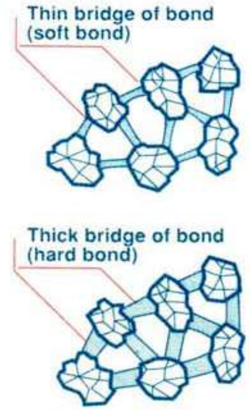

51-A-46-H-5-V-8

Structure :
The amount of bond
present between
the abrasive grains.

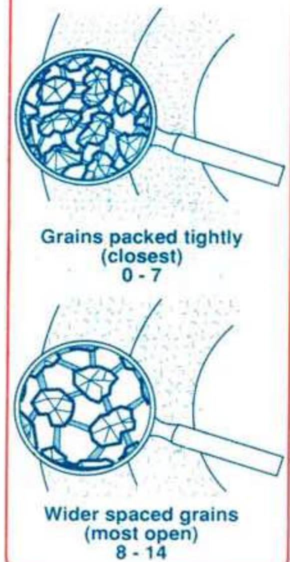

51-A-46-H-5-V-8

Type of bond

V - Vitrified
S - Silicate
R - Rubber
RF - Rubber reinforced
B - Resinoid (Synthetic resins)
BF - Resinoid reinforced
E - Shellac
Mg - Magnesia

51-A-46-H-5-V-8

Manufacturer's symbol
for abrasive
(Optional)

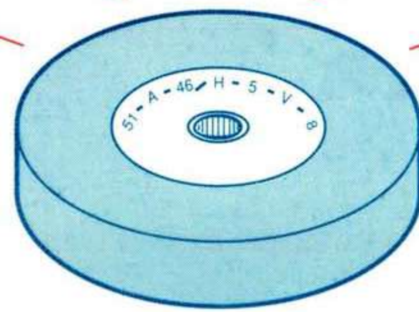

51-A-46-H-5-V-8

Manufacturer's own
identification mark
for the wheel
(Optional)

GRINDING WHEEL MARKING

TR 01 04 01 01 93

CIMI CENTRAL INSTRUCTIONAL MEDIA INSTITUTE, MADRAS
AN INDO-GERMAN PROJECT

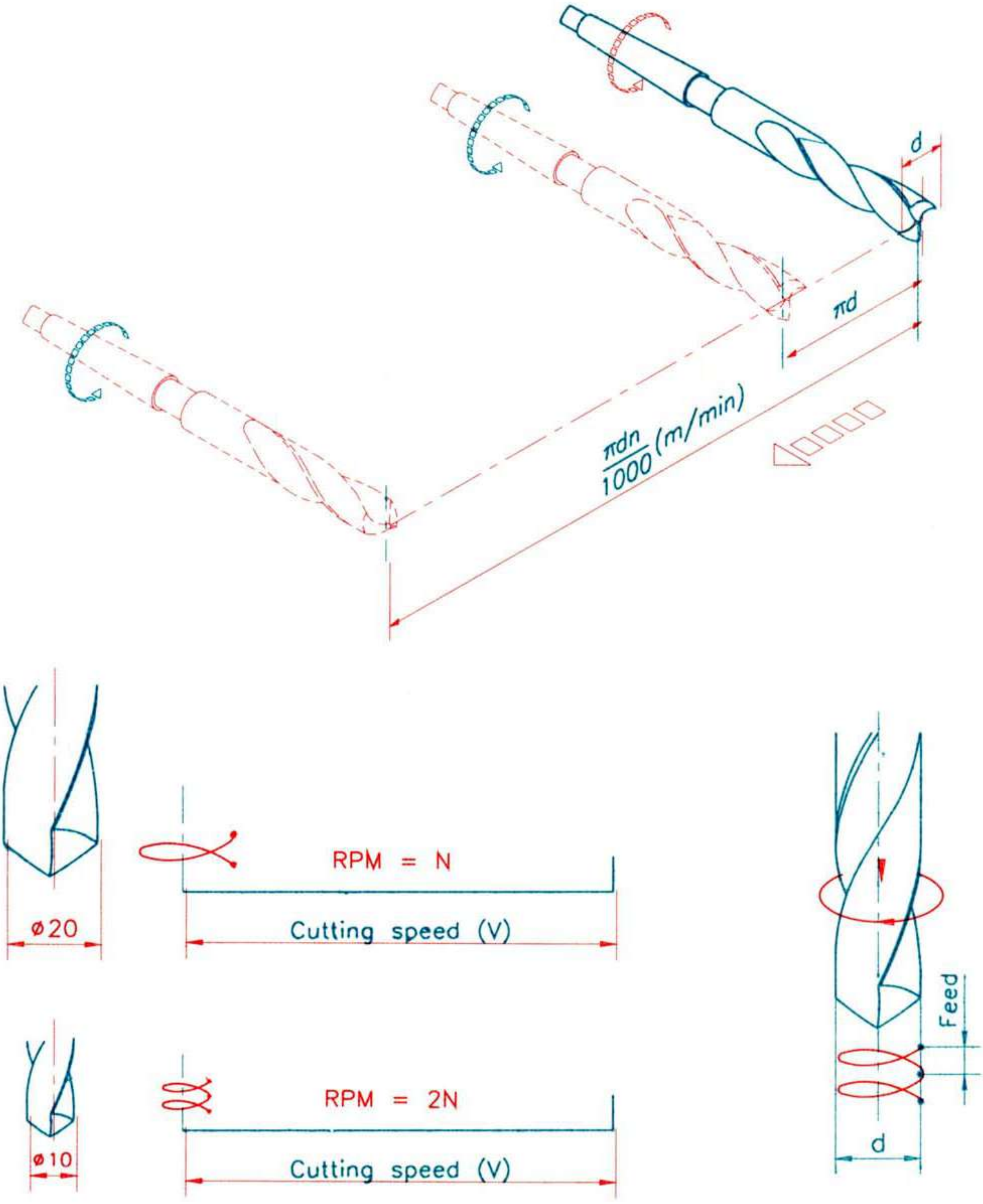

CUTTING SPEED, FEED AND R.P.M. OF DRILLS

TR 01 05 01 01 93

CIMI CENTRAL INSTRUCTIONAL MEDIA INSTITUTE, MADRAS
AN INDO-GERMAN PROJECT

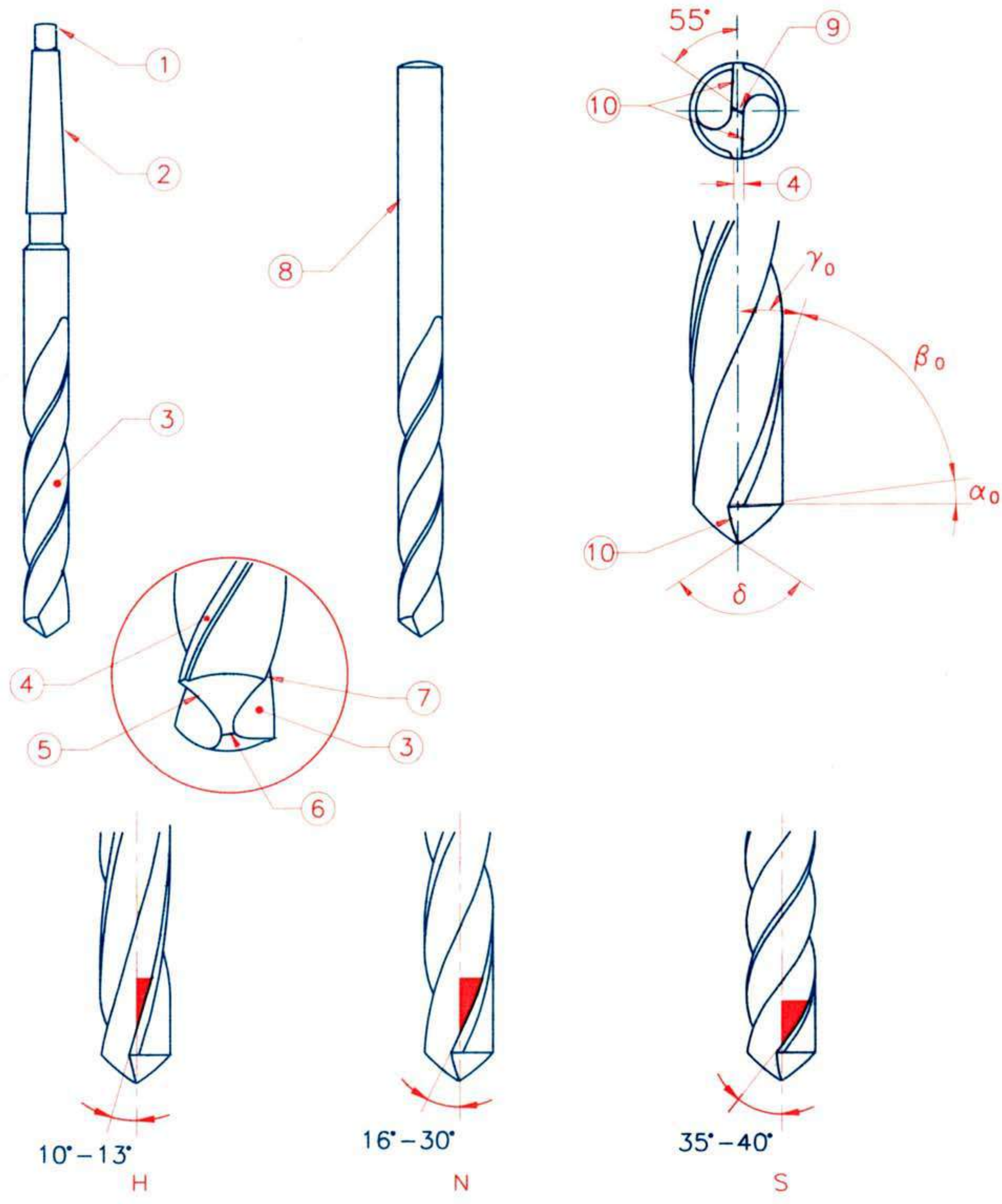

DRILL PARTS AND ANGLES

TR 01 05 02 01 93

CIMI CENTRAL INSTRUCTIONAL MEDIA INSTITUTE, MADRAS
AN INDO-GERMAN PROJECT

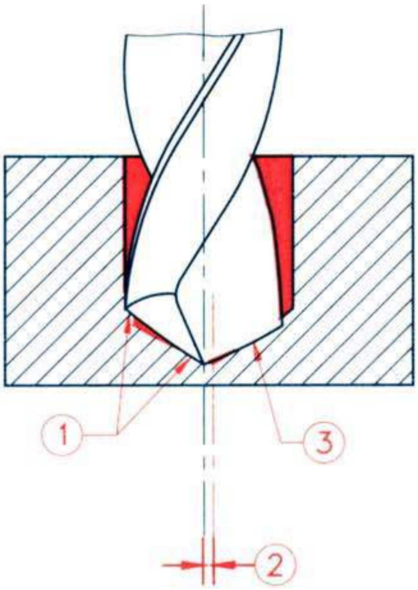

Cutting edges of
unequal angles

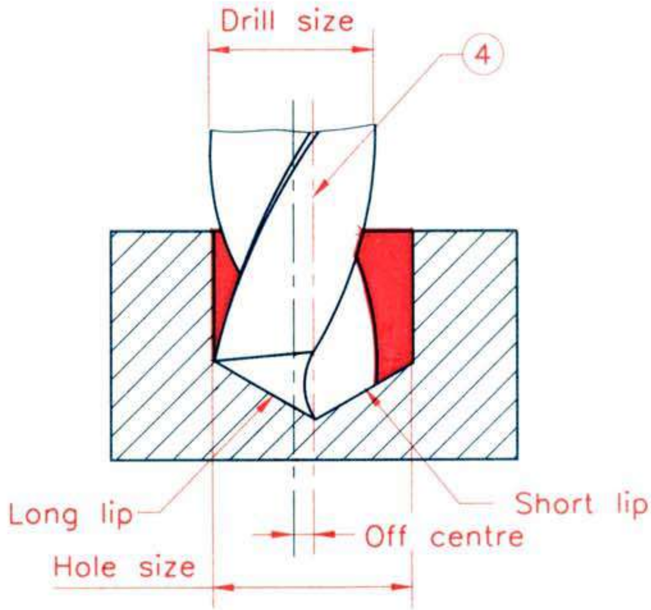

Cutting edges of unequal
length but angles equal

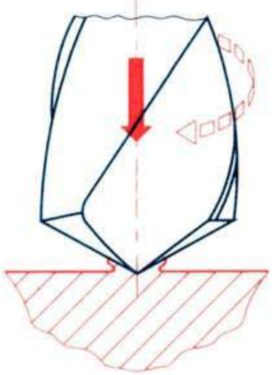

Thick web due to
frequent grinding

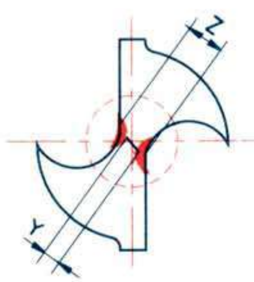

Web thinned
by grinding

DRILL SHARPENING – DEFECTS
THINNING OF WEB

TR 01 05 02 02 93

CIMI CENTRAL INSTRUCTIONAL MEDIA INSTITUTE, MADRAS
AN INDO-GERMAN PROJECT

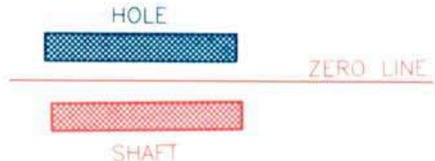

SIMPLIFIED SCHEMATIC DIAGRAM
OF CLEARANCE FIT

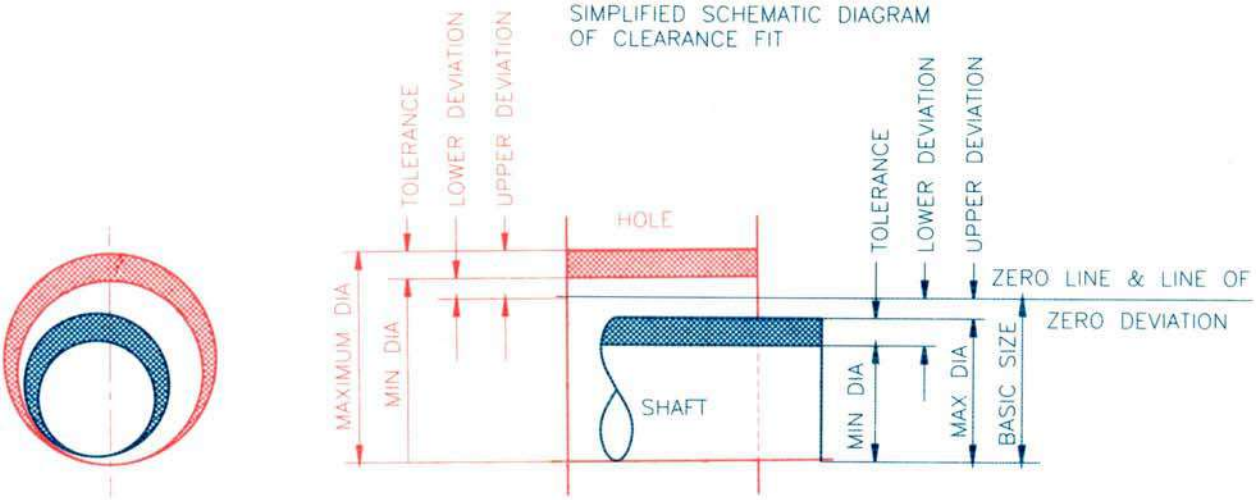

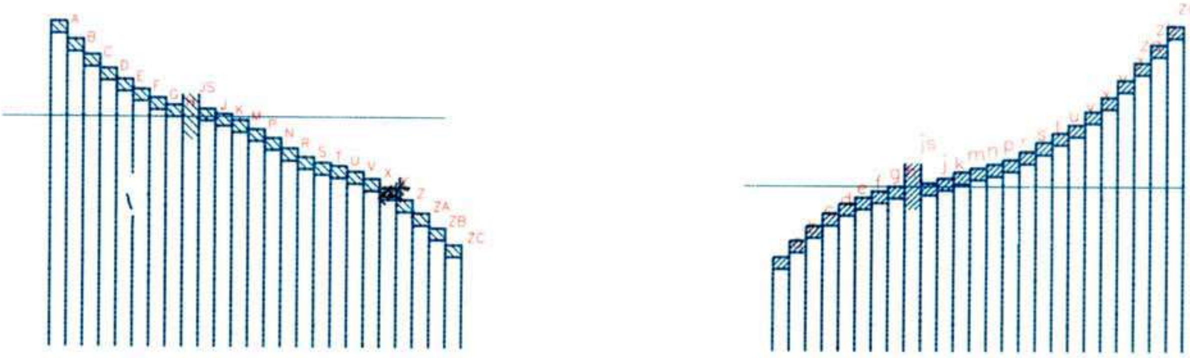

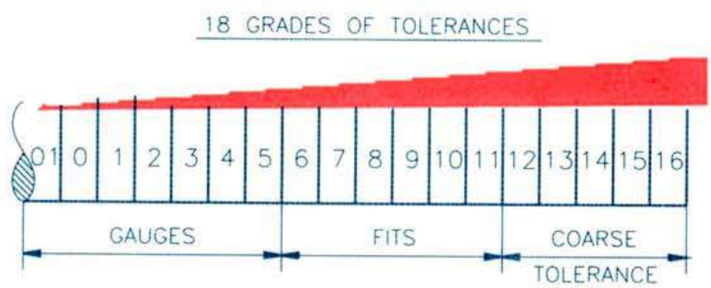

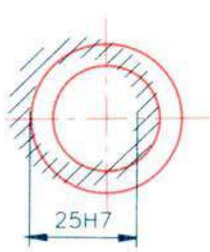

WHAT DOES 25H7
INDICATE?

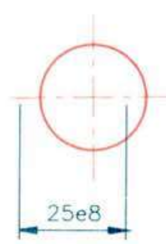

WHAT DOES 25e8
INDICATE?

FUNDAMENTALS OF LIMITS AND FITS	TR 01 06 01 01 93	CIMI CENTRAL INSTRUCTIONAL MEDIA INSTITUTE, MADRAS AN INDO-GERMAN PROJECT

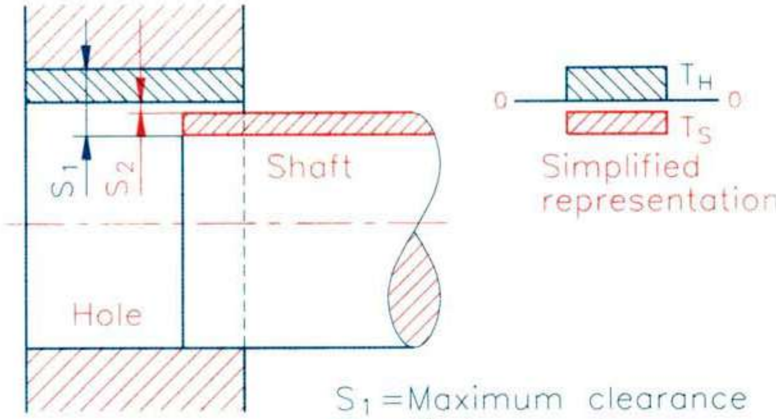

S_1 = Maximum clearance
S_2 = Minimum clearance

Clearance fit

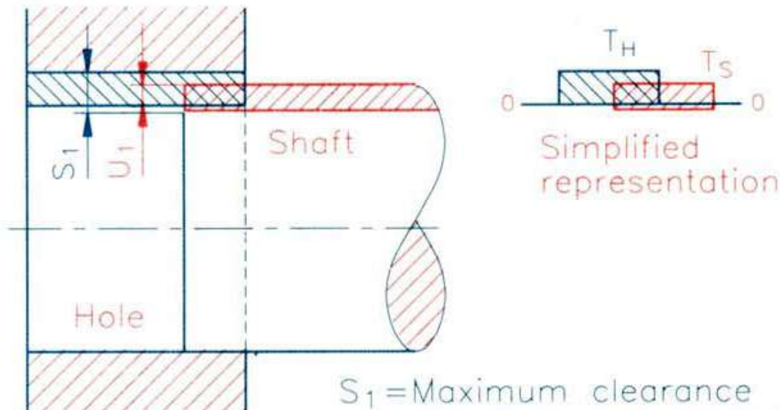

S_1 = Maximum clearance
U_1 = Maximum interferance

Transition fit

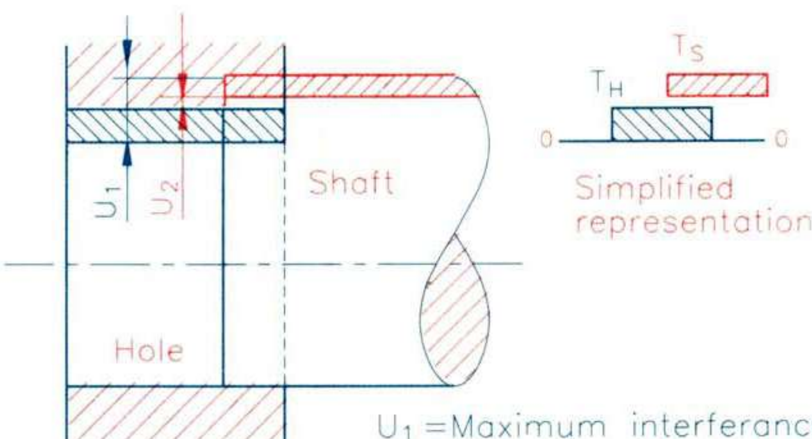

U_1 = Maximum interferance
U_2 = Minimum interferance

Interferance fit

CLASSES OF FIT | TR 01 06 01 02 93 | CIMI CENTRAL INSTRUCTIONAL MEDIA INSTITUTE, MADRAS — AN INDO-GERMAN PROJECT

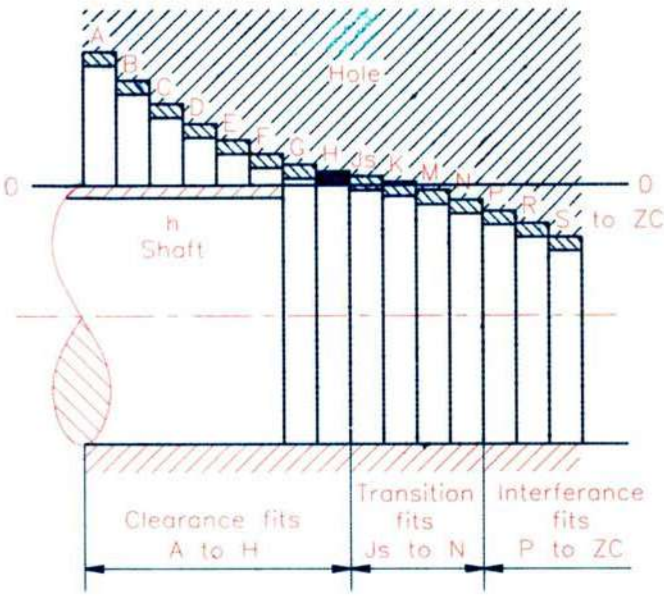

BASIC SHAFT SYSTEM

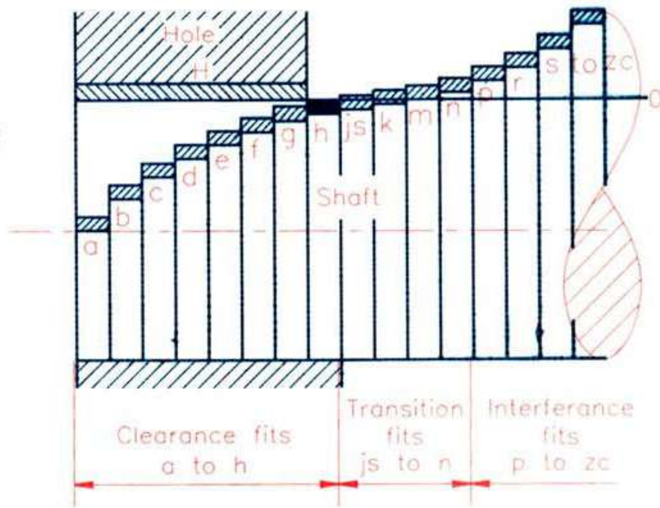

BASIC HOLE SYSTEM

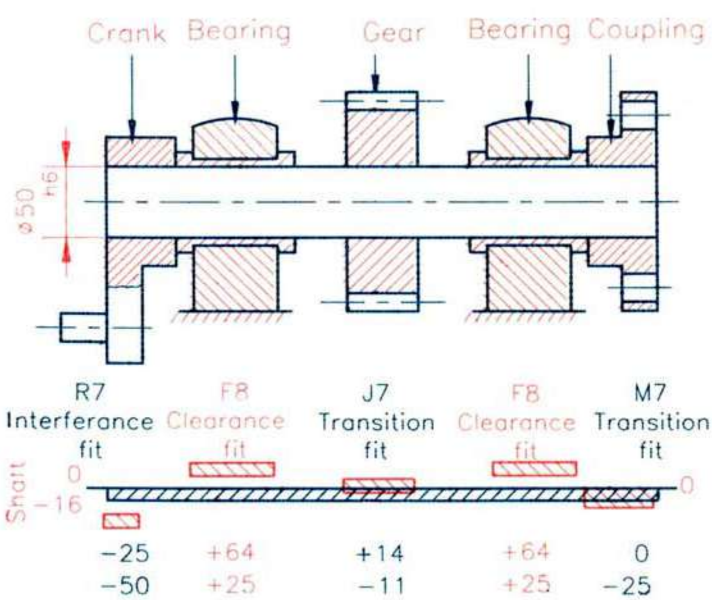

APPLICATION FOR THE BASIC SHAFT SYSTEM

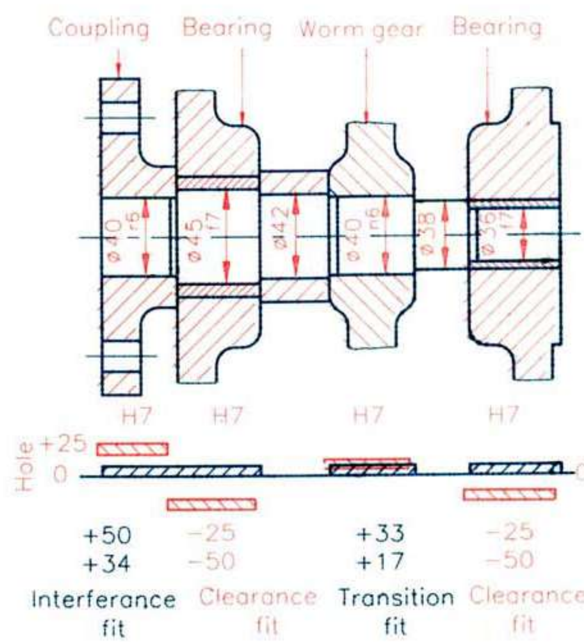

APPLICATION FOR THE BASIC HOLE SYSTEM

SHAFT BASIS AND HOLE BASIS SYSTEM OF LIMITS AND FITS	TR 01 06 01 03 93	CIMI CENTRAL INSTRUCTIONAL MEDIA INSTITUTE, MADRAS AN INDO-GERMAN PROJECT

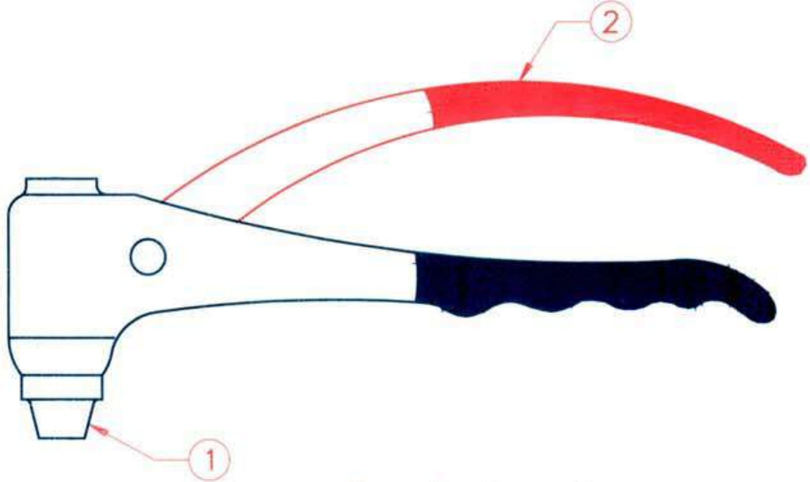

Pop riveting plier

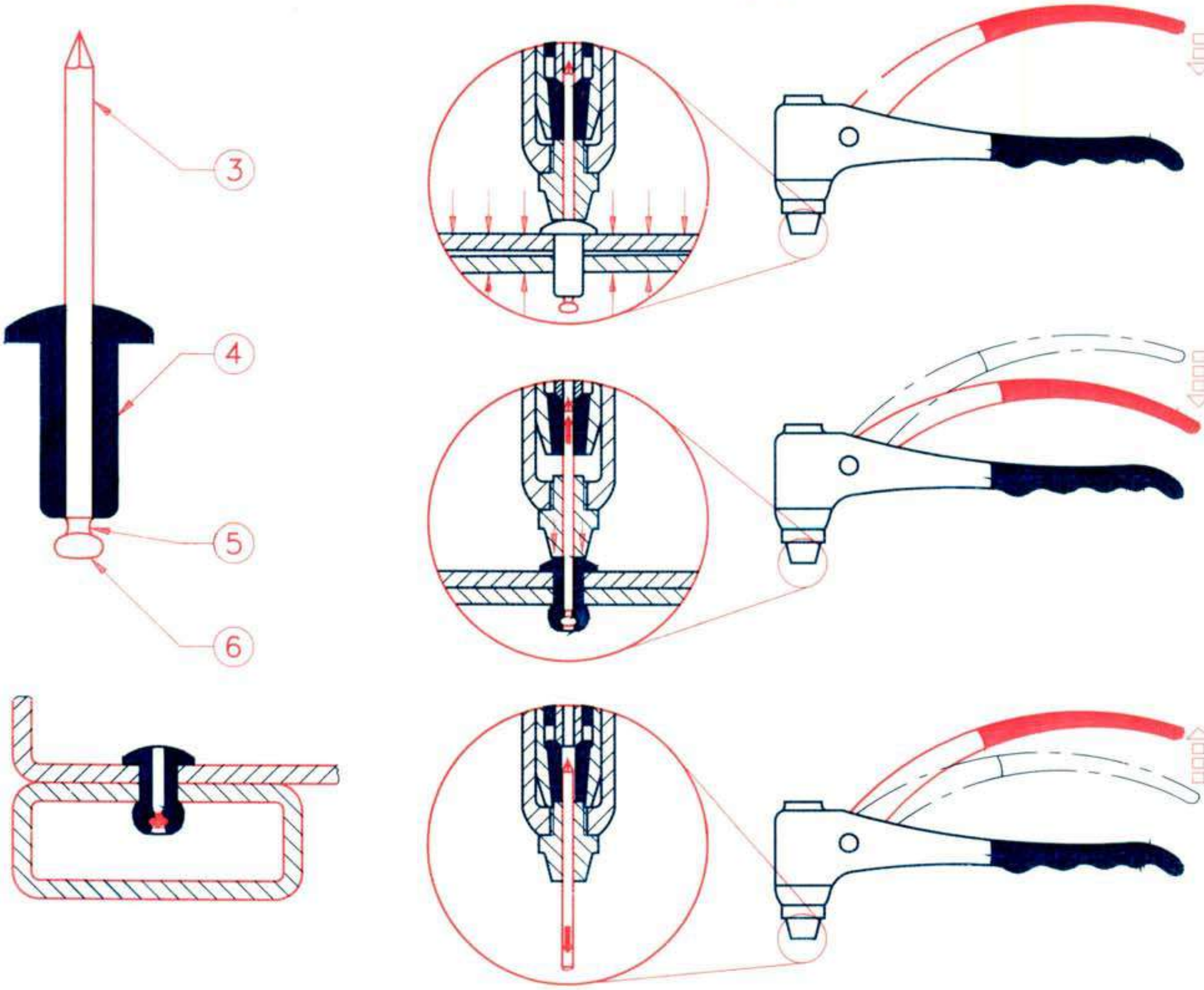

BLIND RIVETING WITH POP RIVETS

TR 01 11 03 01 93

CIMI CENTRAL INSTRUCTIONAL MEDIA INSTITUTE, MADRAS
AN INDO-GERMAN PROJECT

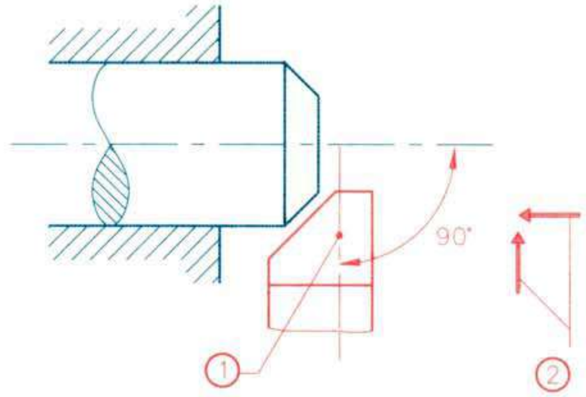

FORM TOOL METHOD

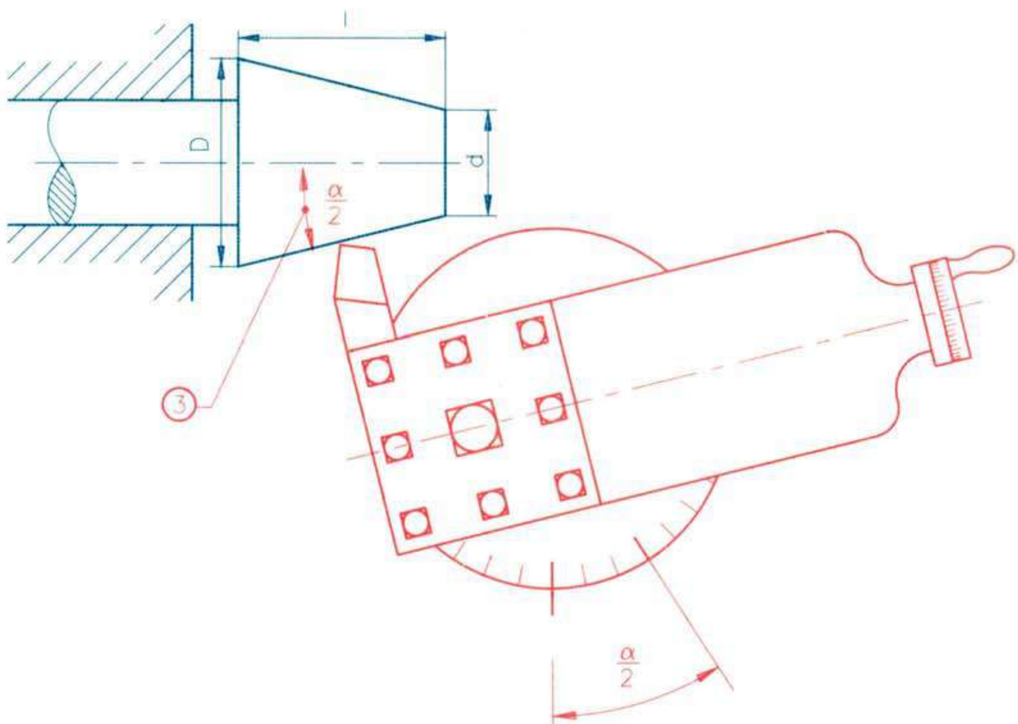

COMPOUND SLIDE METHOD

DIFFERENT METHODS OF TAPER TURNING
(FORM TOOL AND COMPOUND REST)

TR 01 15 03 01 93

CIMI CENTRAL INSTRUCTIONAL MEDIA INSTITUTE, MADRAS
AN INDO-GERMAN PROJECT

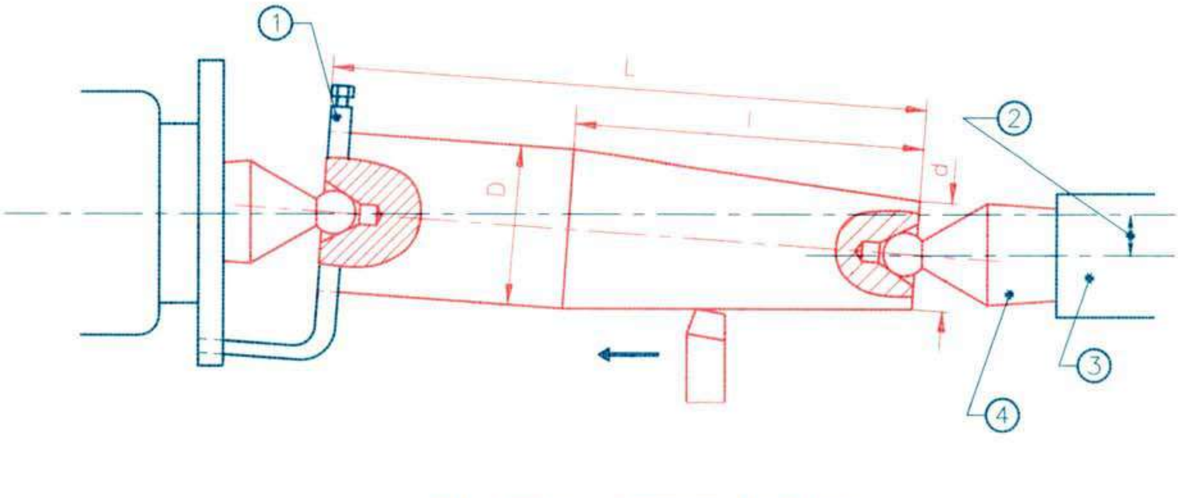

TAILSTOCK OFFSET METHOD

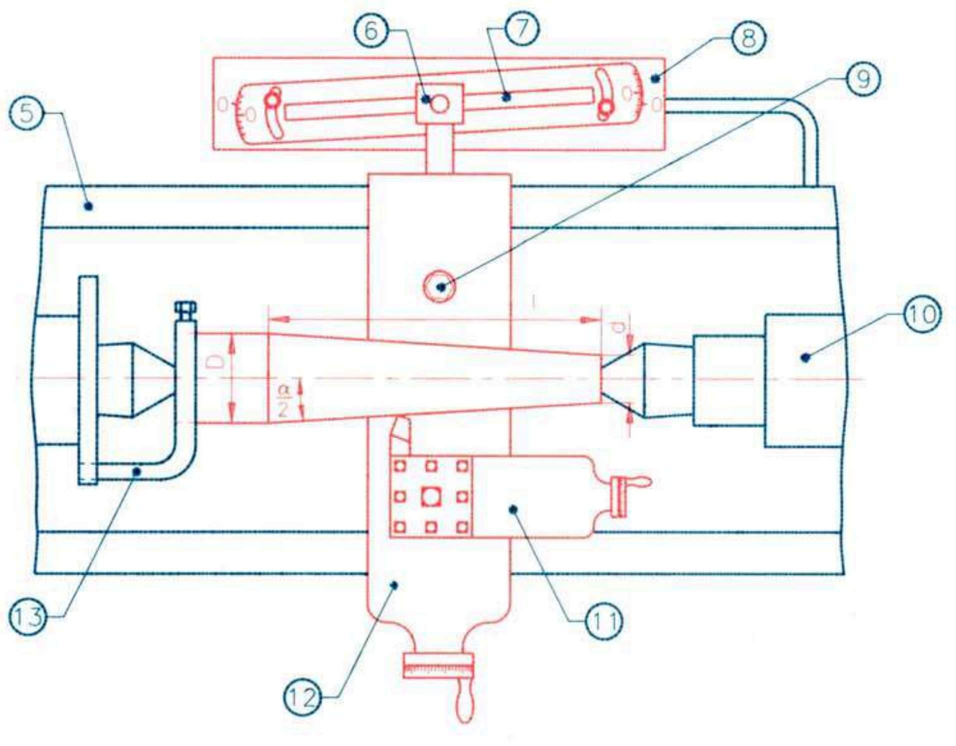

TAPER TURNING ATTACHMENT METHOD

DIFFERENT METHODS OF TAPER TURNING (TAILSTOCK SET OVER AND TAPER TURNING ATTACHMENT)	TR 01 15 03 02 93	CIMI CENTRAL INSTRUCTIONAL MEDIA INSTITUTE, MADRAS AN INDO-GERMAN PROJECT

TURNER
2nd YEAR

TRANSPARENCIES

CENTRAL INSTRUCTIONAL MEDIA INSTITUTE, MADRAS
AN INDO - GERMAN PROJECT

Directorate General of Employment & Training, Ministry of Labour, Govt. of India.

Developed by
CENTRAL INSTRUCTIONAL MEDIA INSTITUTE
in collaboration with DEUTSCHE GESELLSCHAFT FUER TECHNISCHE ZUSAMMENARBEIT (GTZ) Germany.
P.O.Box 3142, 76, GST Road, Guindy, Madras - 600 032. Phone : 234 5256, 234 5257, Fax : (0091-44) 234 2791

CIMI CENTRAL INSTRUCTIONAL MEDIA INSTITUTE, MADRAS
AN INDO-GERMAN PROJECT

gtz

TR 01 02 10 01 95

MEASUREMENT OF TAPER ANGLE USING SINEBAR

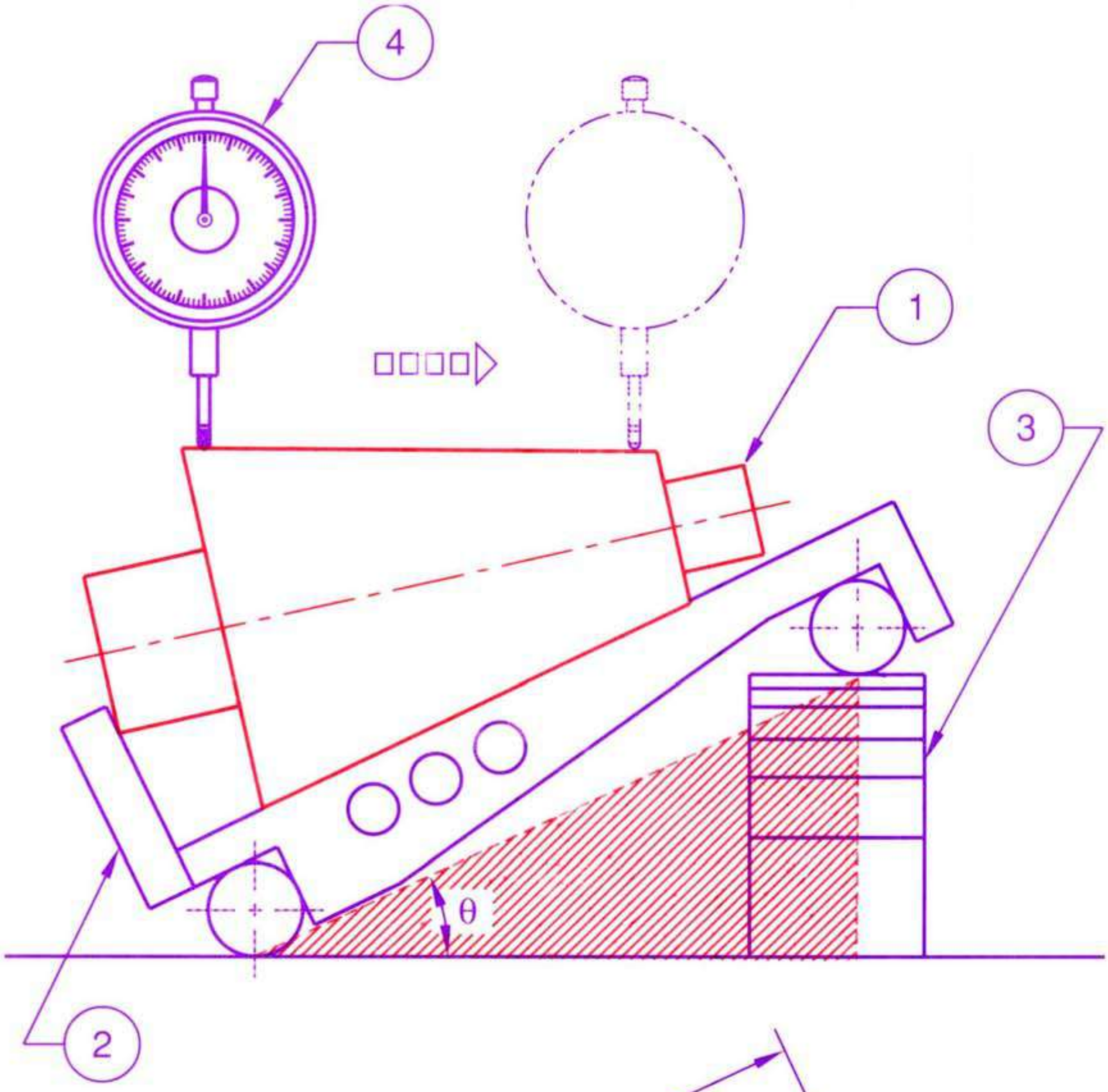

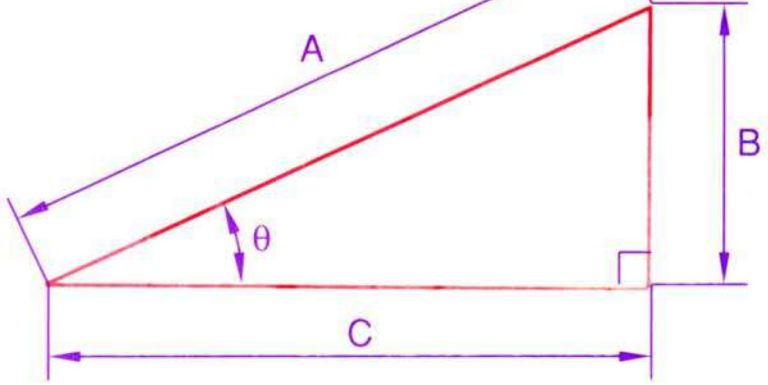

TAPER CALCULATION USING SINEBAR

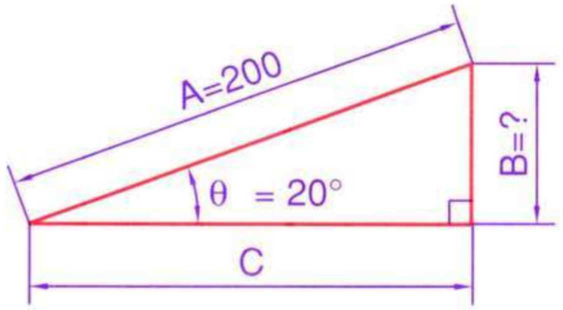

1. What is the height of the slip gauges used?

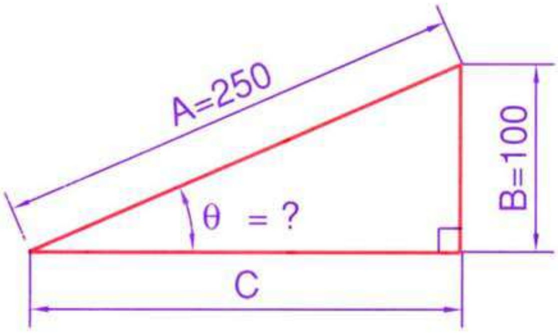

2. What is the included angle of the tapered job?

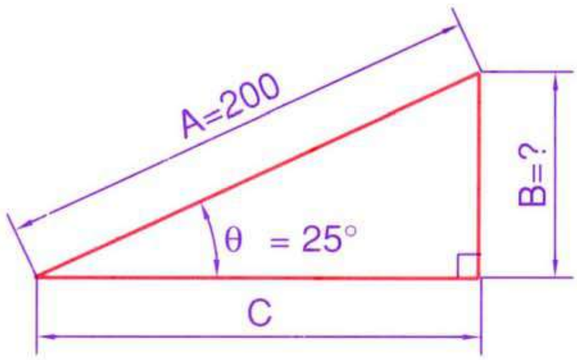

3. What is the height of the slip gauges used?

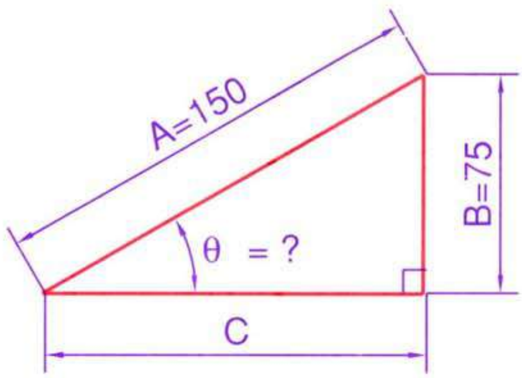

4. What is the included angle of the tapered job?

TURRET LATHE (PARTS AND FUNCTION)

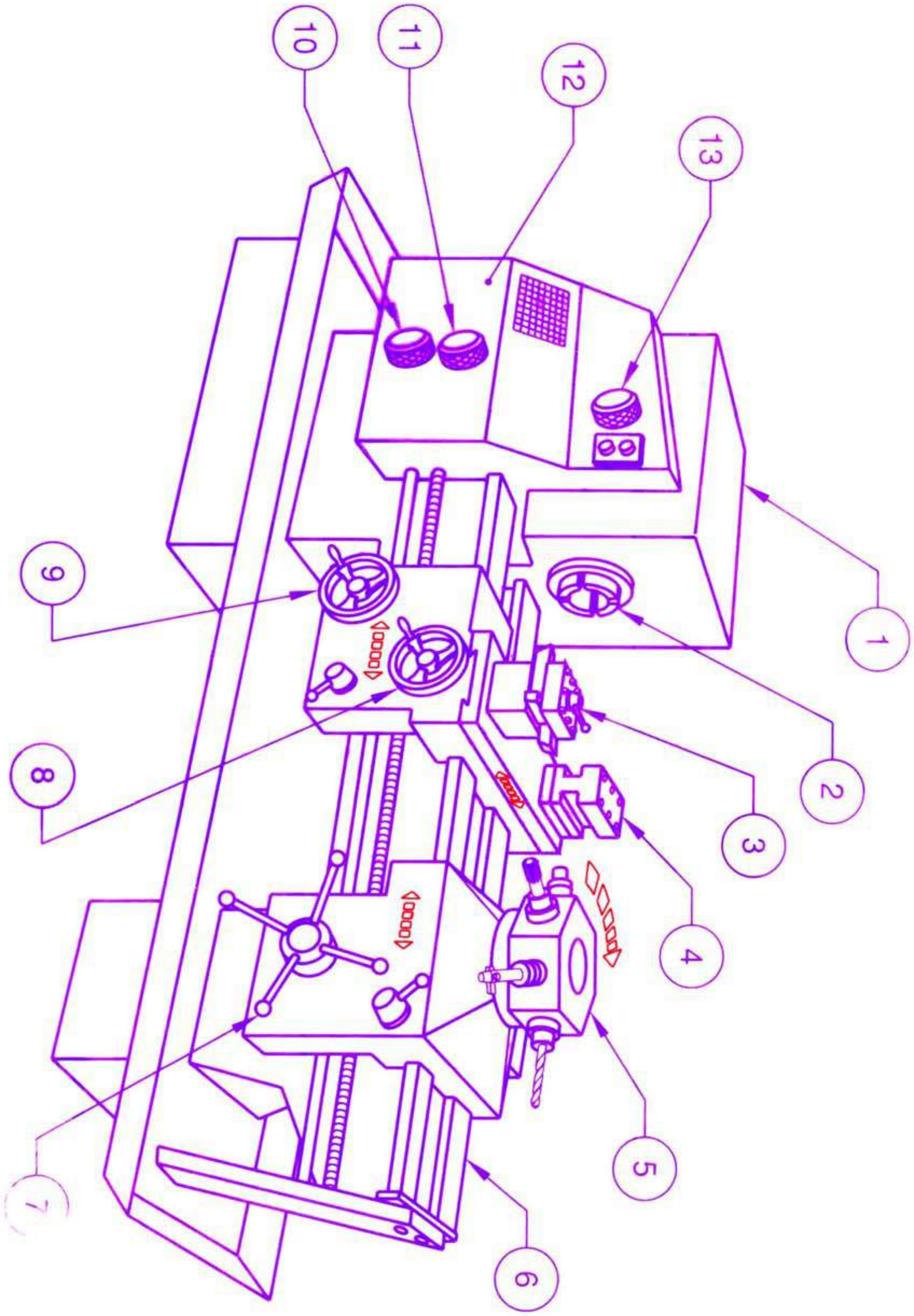

TR 01 12 02 02 95

TURRET AND CAPSTAN LATHE (COMPARISON)

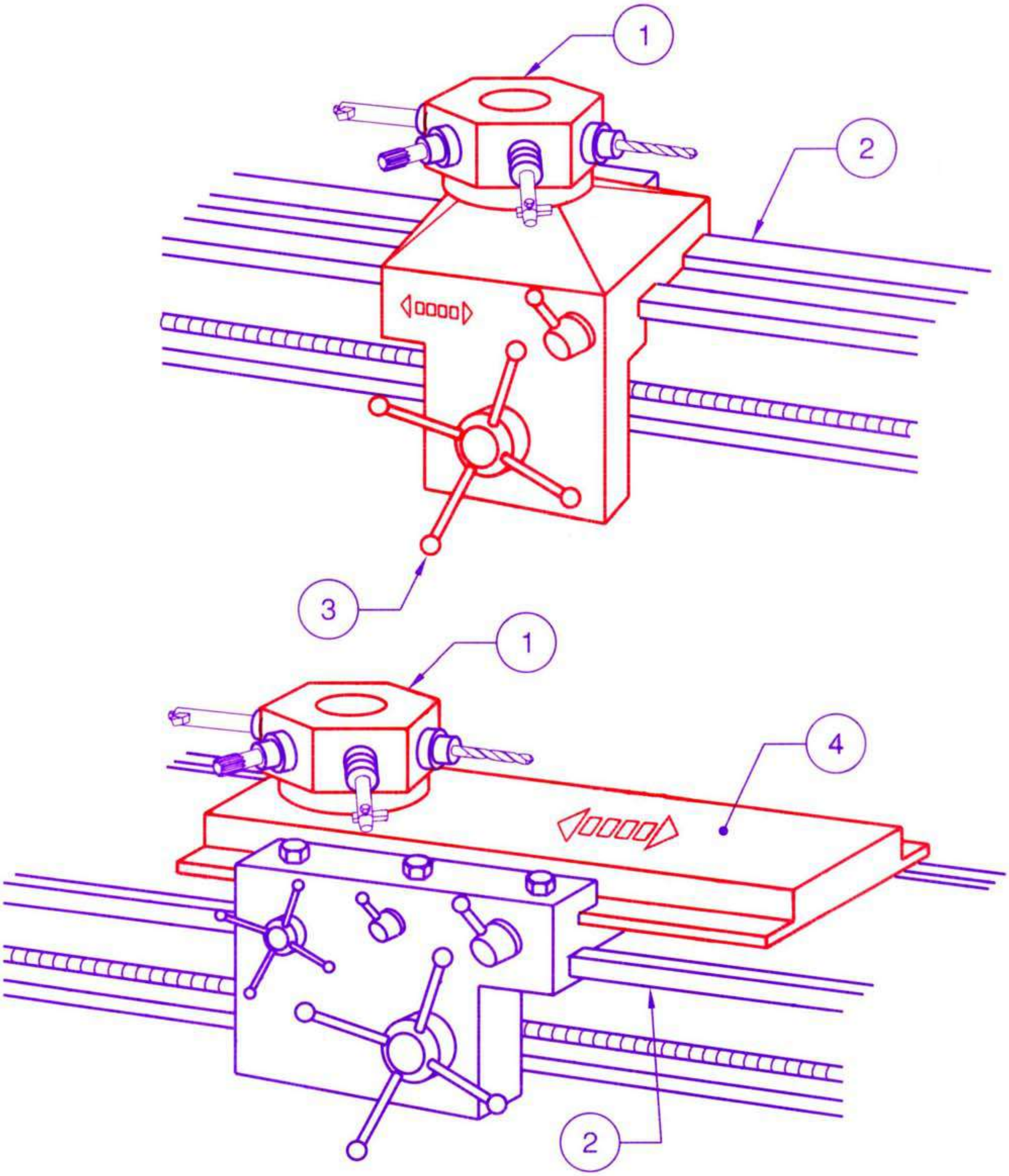

CIMI CENTRAL INSTRUCTIONAL MEDIA INSTITUTE, MADRAS
AN INDO-GERMAN PROJECT

TR 01 12 02 03 95

TURRET LATHE TOOL SETUP (EXTERNAL TURNING)

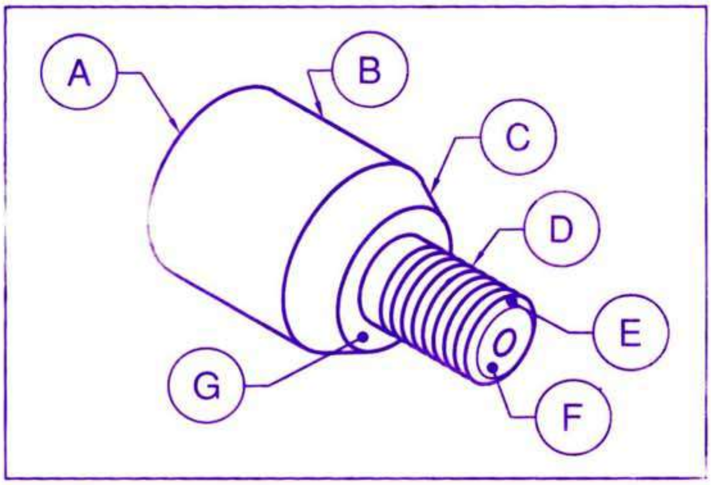

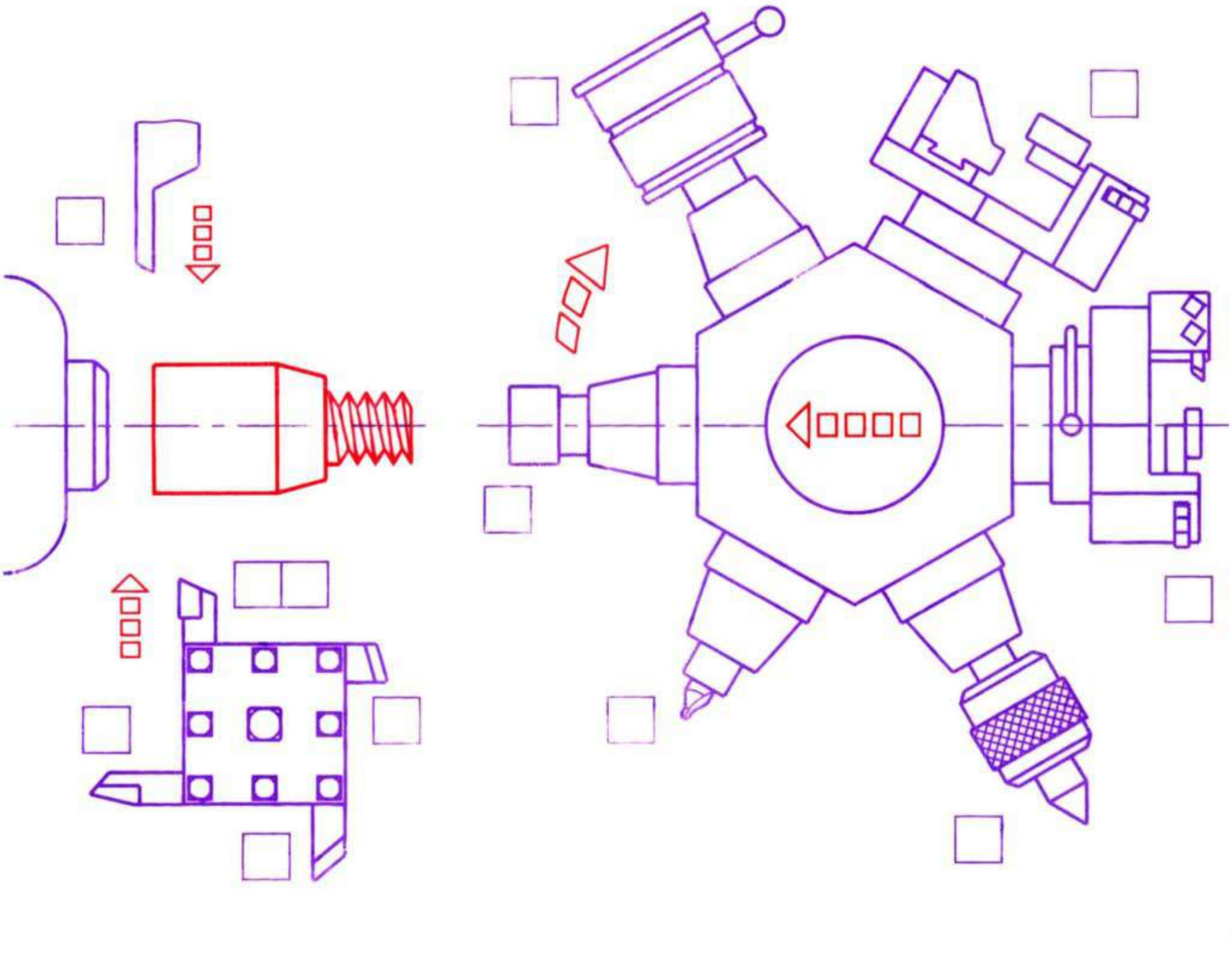

CIMI CENTRAL INSTRUCTIONAL MEDIA INSTITUTE, MADRAS
AN INDO-GERMAN PROJECT

TR 01 12 02 04 95

TURRET LATHE (EXTERNAL TURNING SEQUENCE)

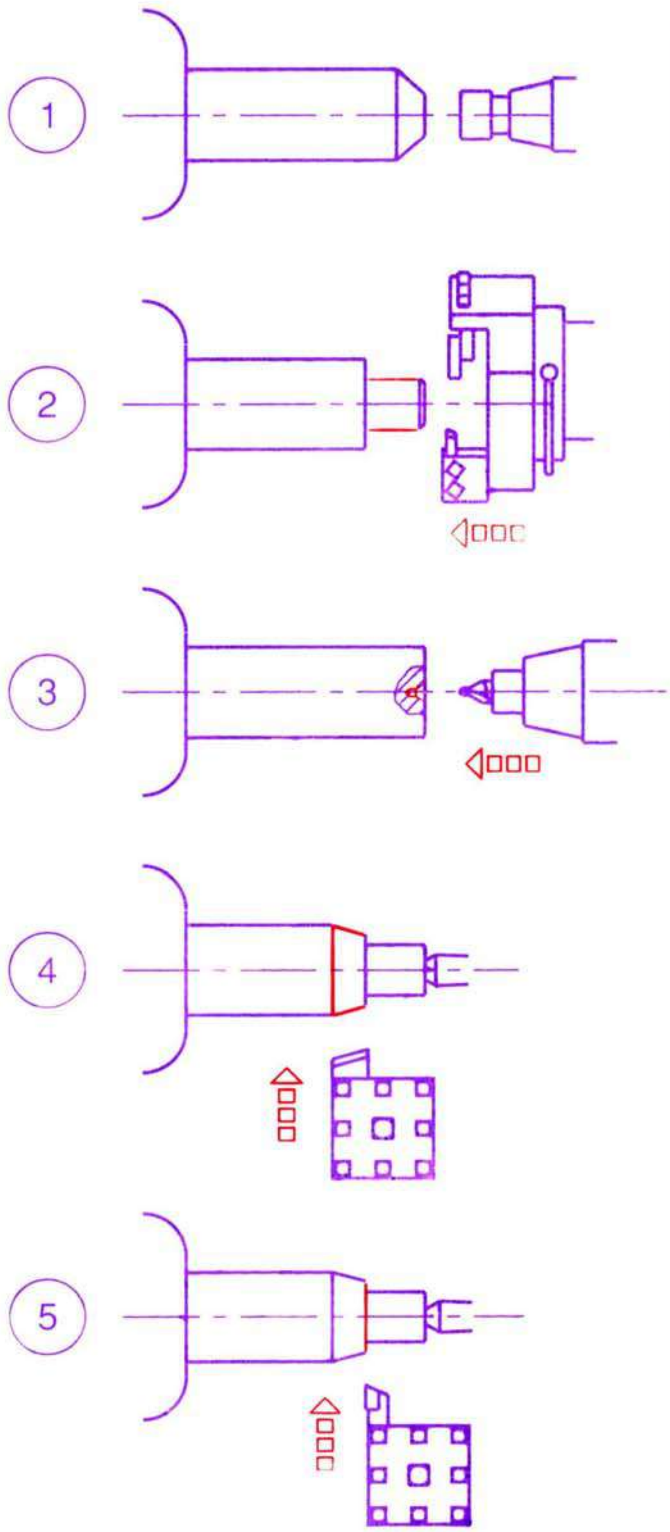

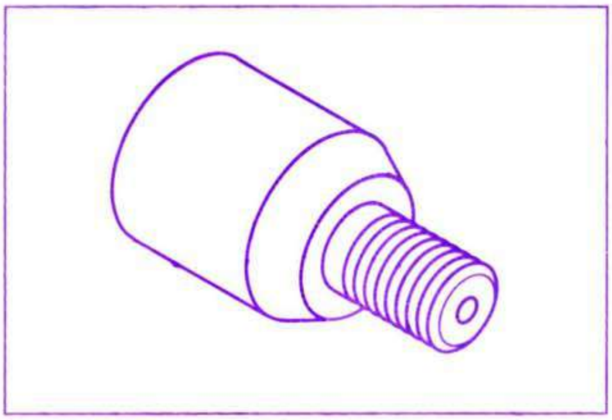

TURRET LATHE (EXTERNAL TURNING SEQUENCE)

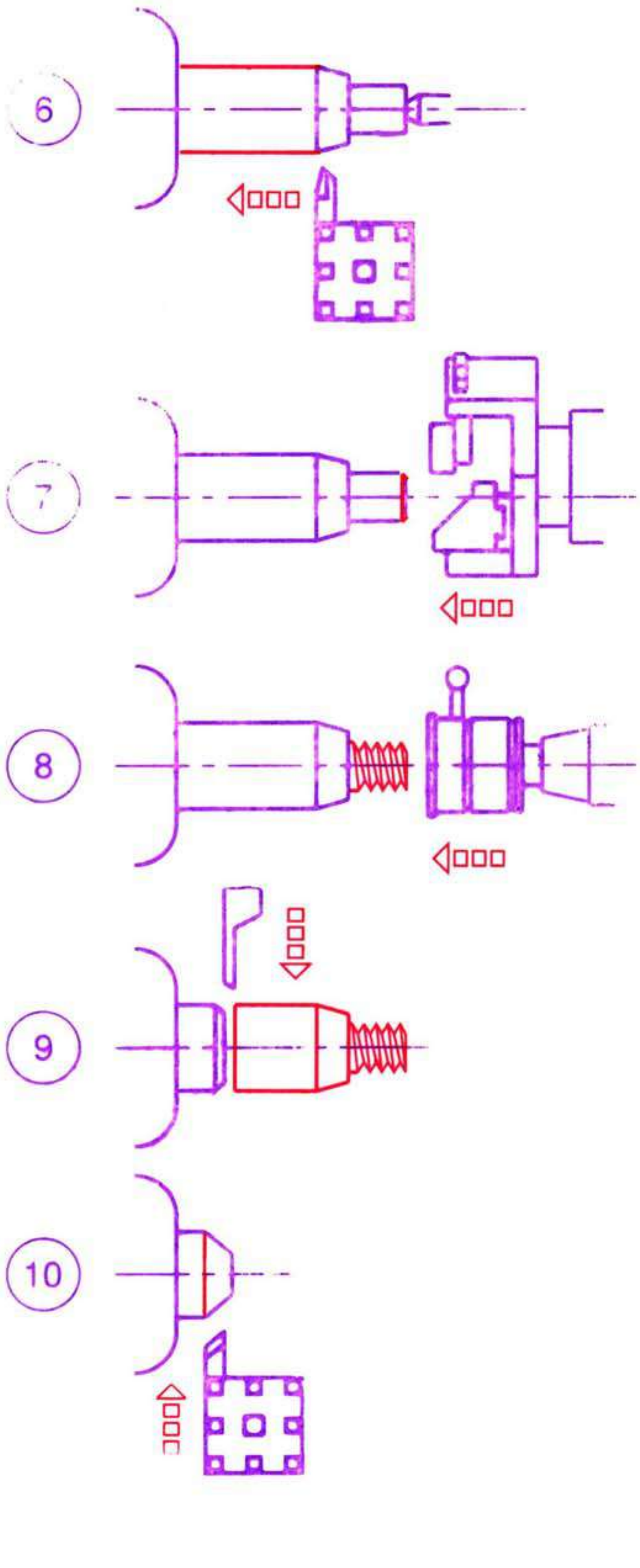

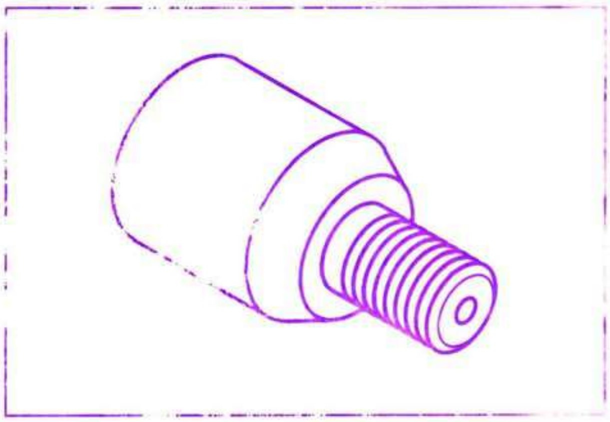

CIMI CENTRAL INSTRUCTIONAL MEDIA INSTITUTE, MADRAS
AN INDO-GERMAN PROJECT

gtz

TR 01 12 02 06 95

SELF OPENING DIE-HEAD (WORKING PRINCIPLE)

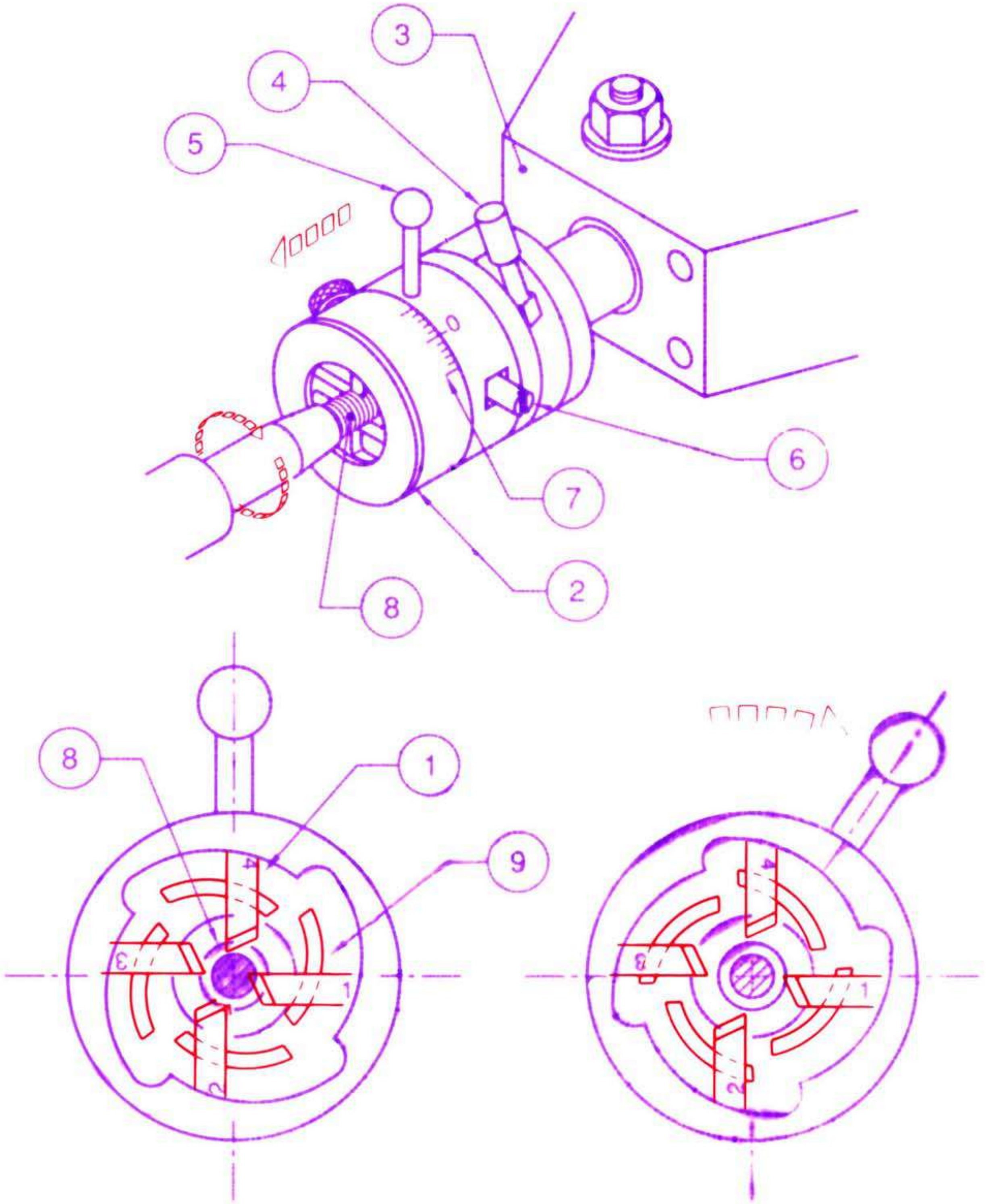

CIMI CENTRAL INSTRUCTIONAL MEDIA INSTITUTE, MADRAS
AN INDO-GERMAN PROJECT

gtz

TR 01 12 02 07 95

BAR FEEDING MECHANISM (FUNCTION)

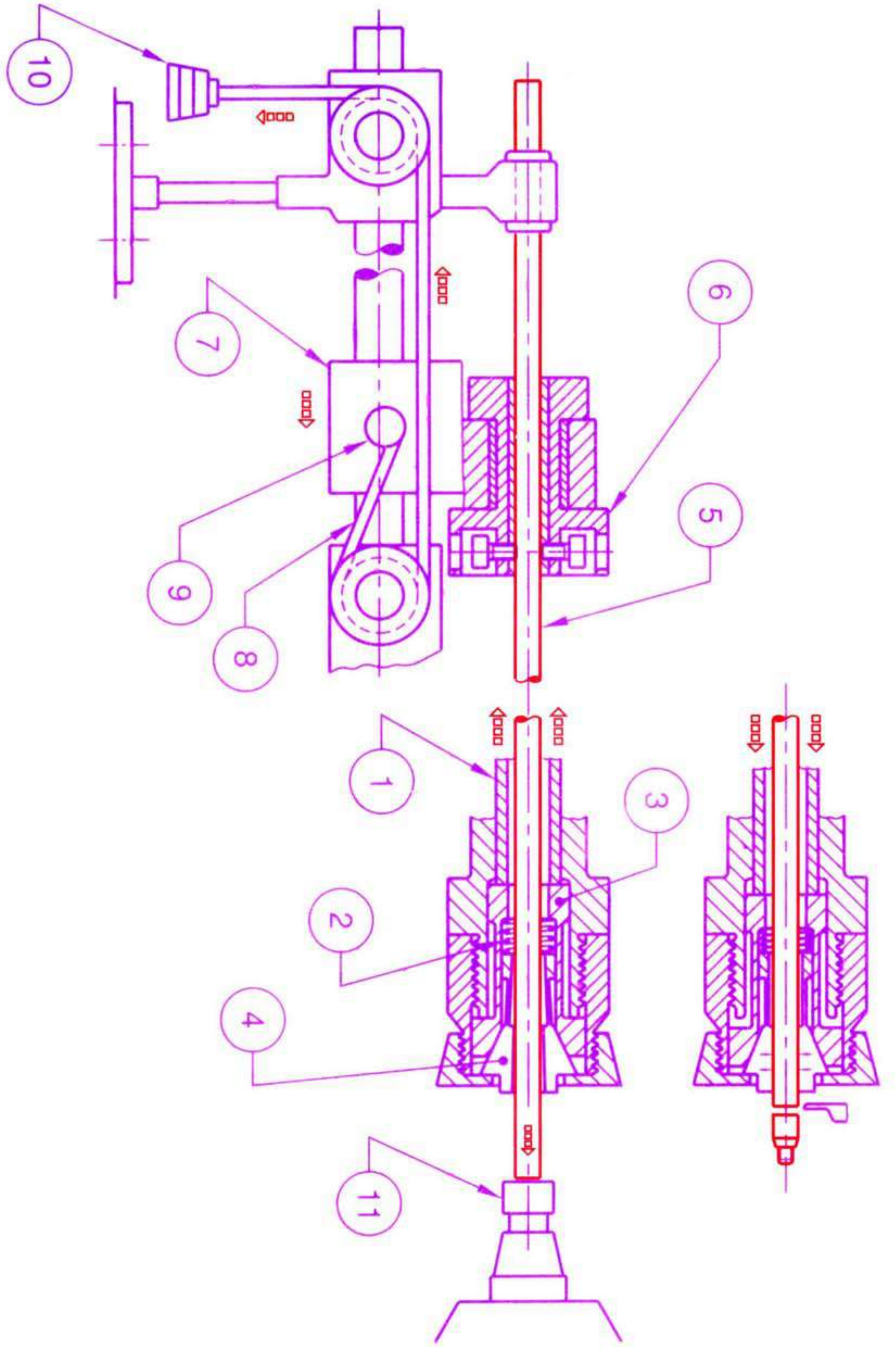

TURRET LATHE TOOL SETUP (INTERNAL TURNING)

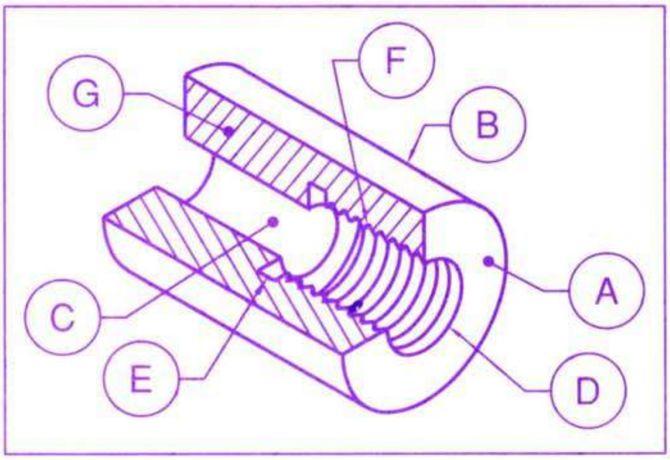

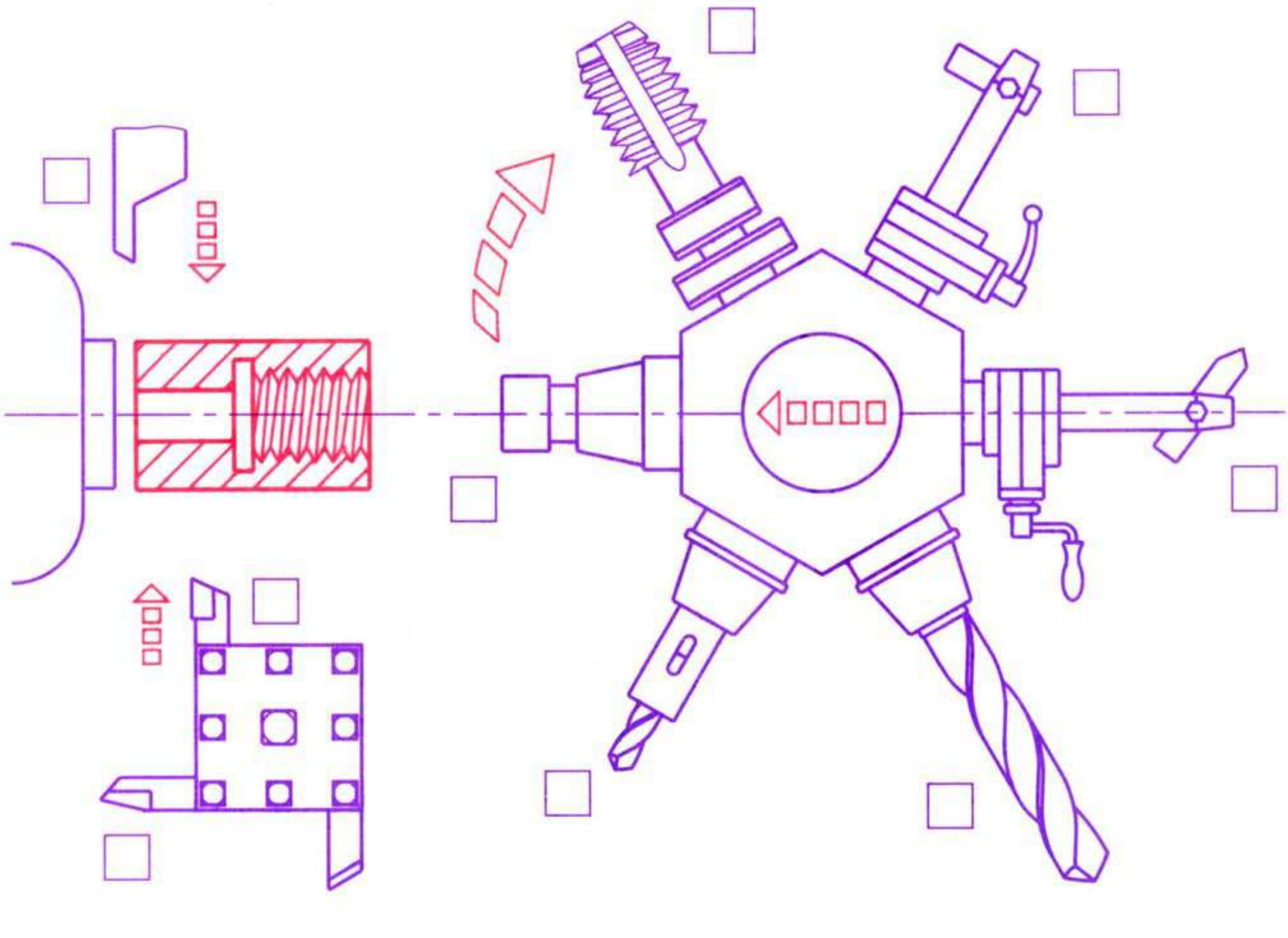

CIMI CENTRAL INSTRUCTIONAL MEDIA INSTITUTE, MADRAS
AN INDO GERMAN PROJECT

TR 01 12 02 09 95

TURRET LATHE (INTERNAL TURNING SEQUENCE)

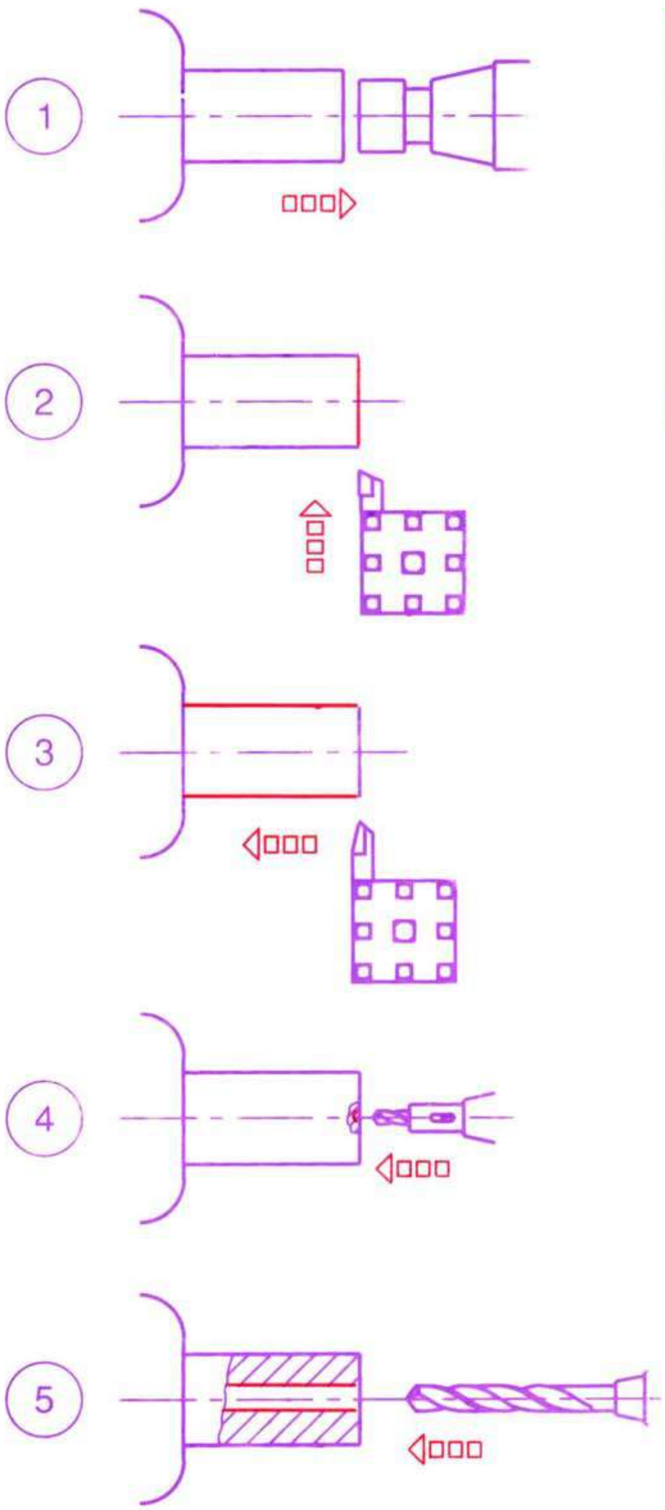

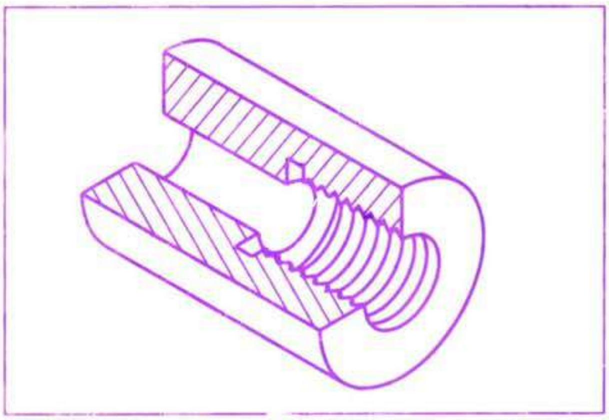

TURRET LATHE (INTERNAL TURNING SEQUENCE)

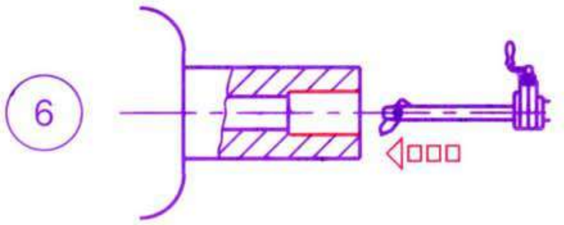

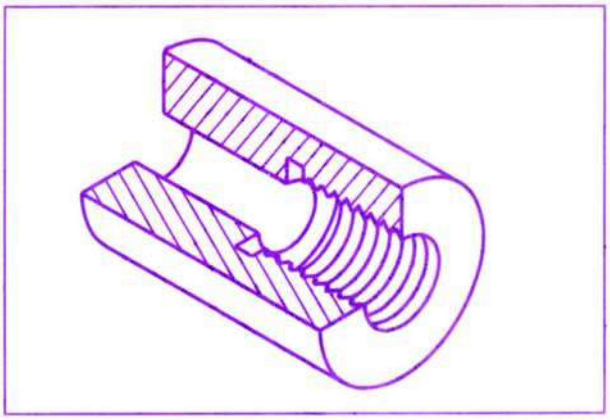

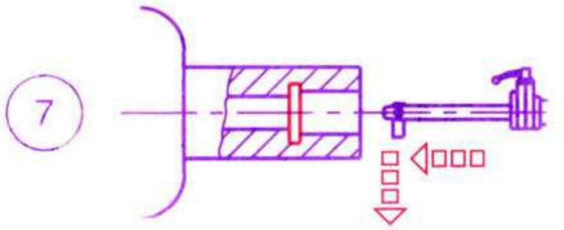

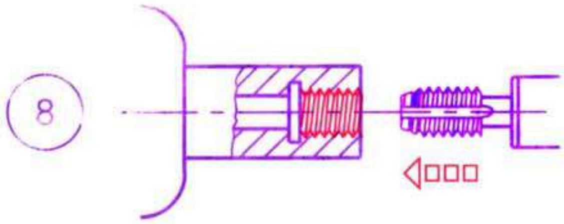

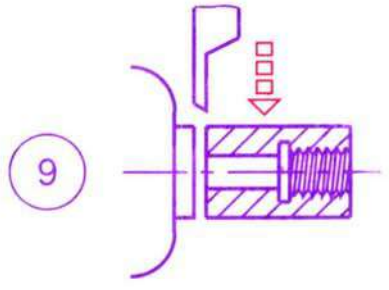

TR 01 13 01 03 95

AIR-OPERATED CHUCK (WORKING PRINCIPLE)

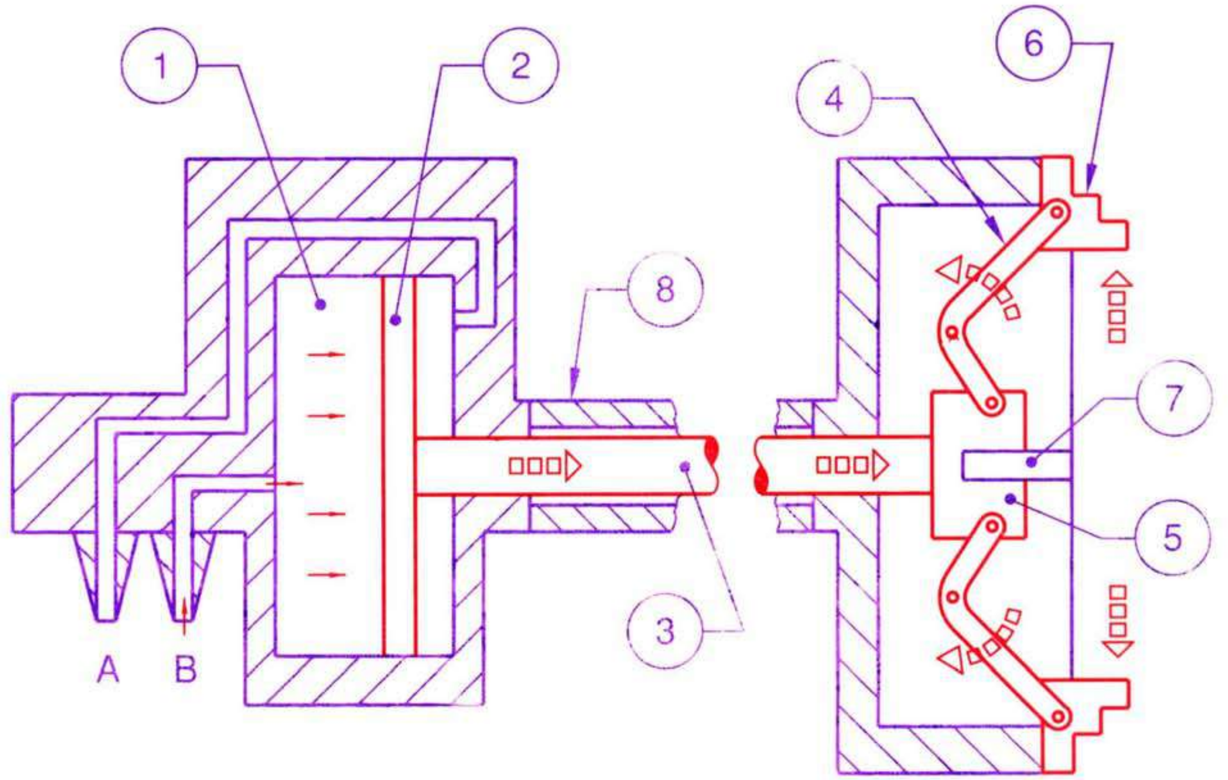

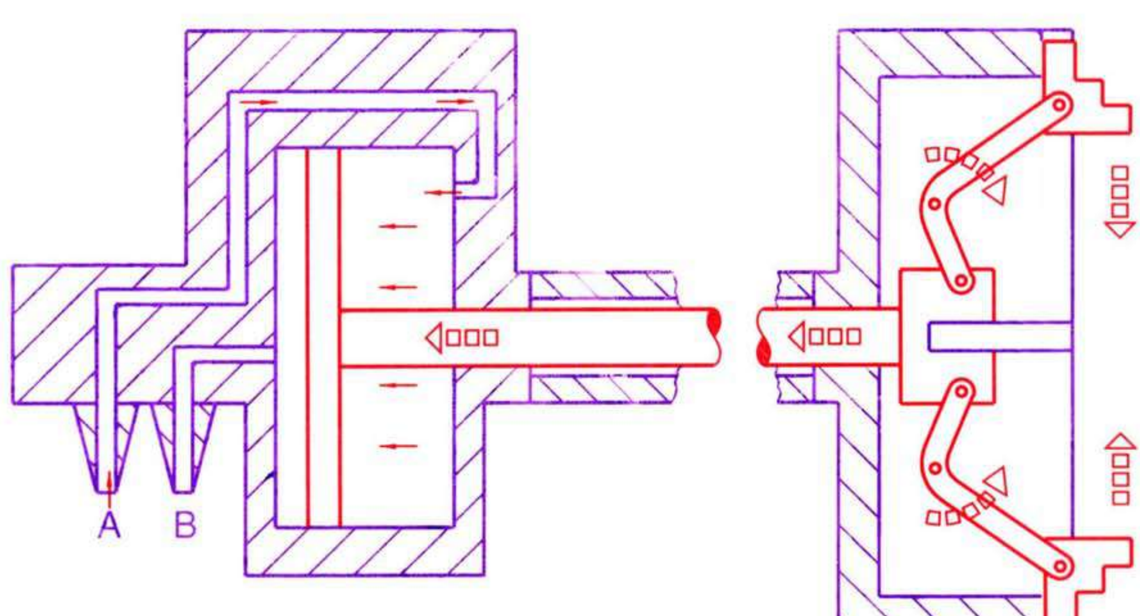

COLLET - DRAW-IN-TYPE (WORKING PRINCIPLE)

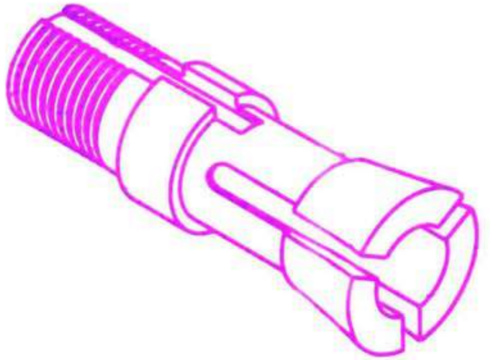

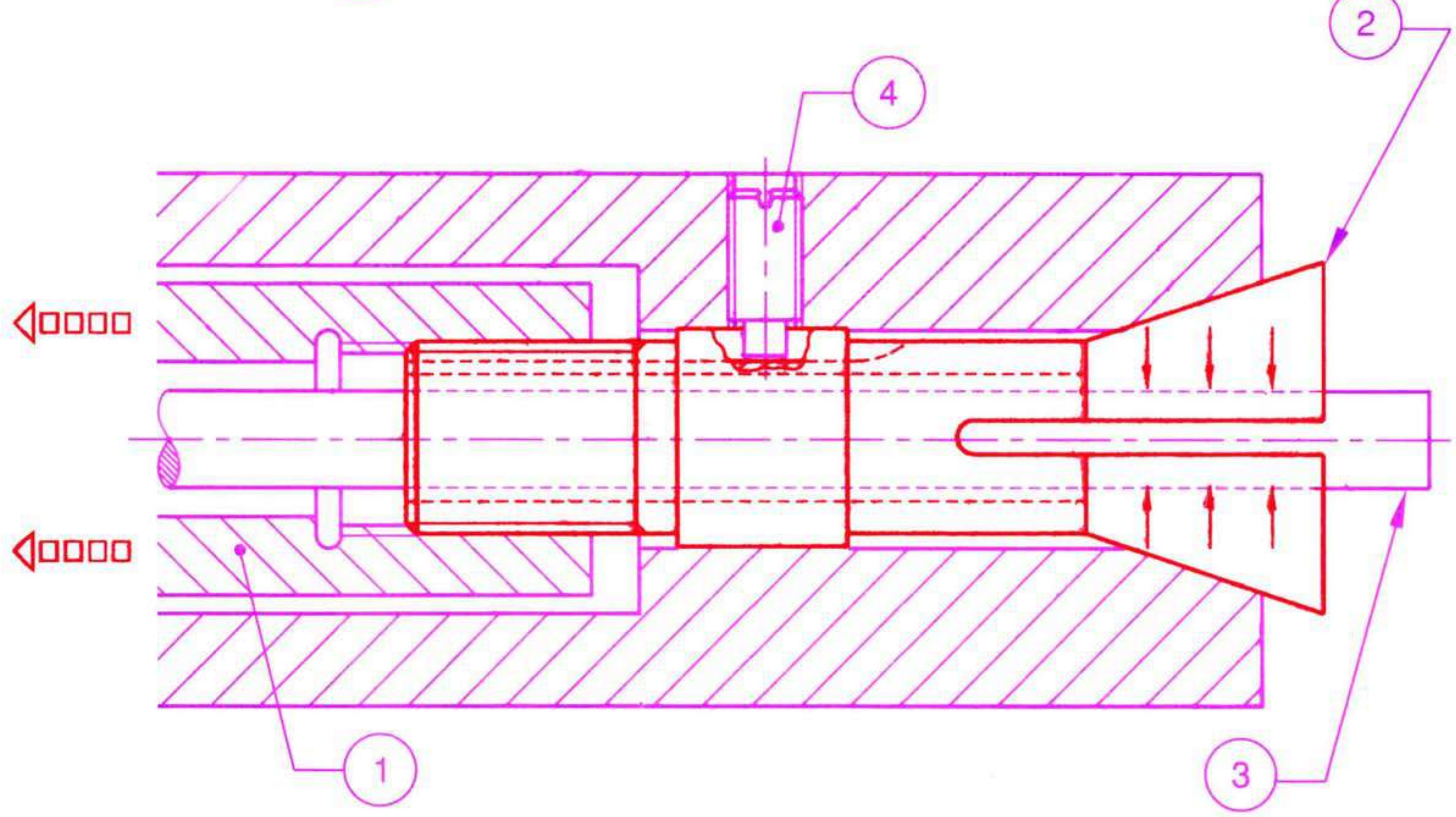

COLLET - PUSH OUT TYPE (WORKING PRINCIPLE)

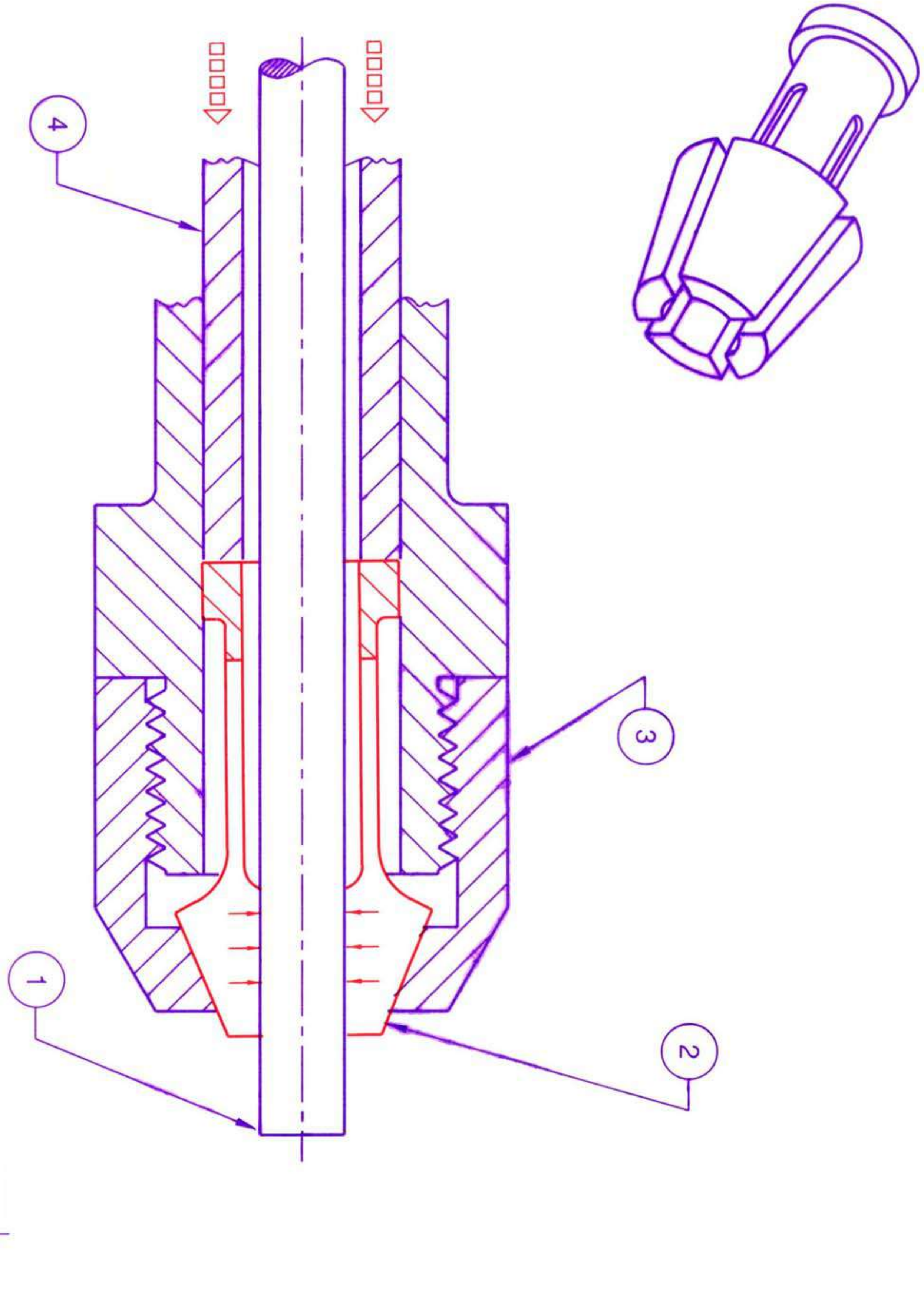

COLLET - DEAD LENGTH TYPE (WORKING PRINCIPLE)

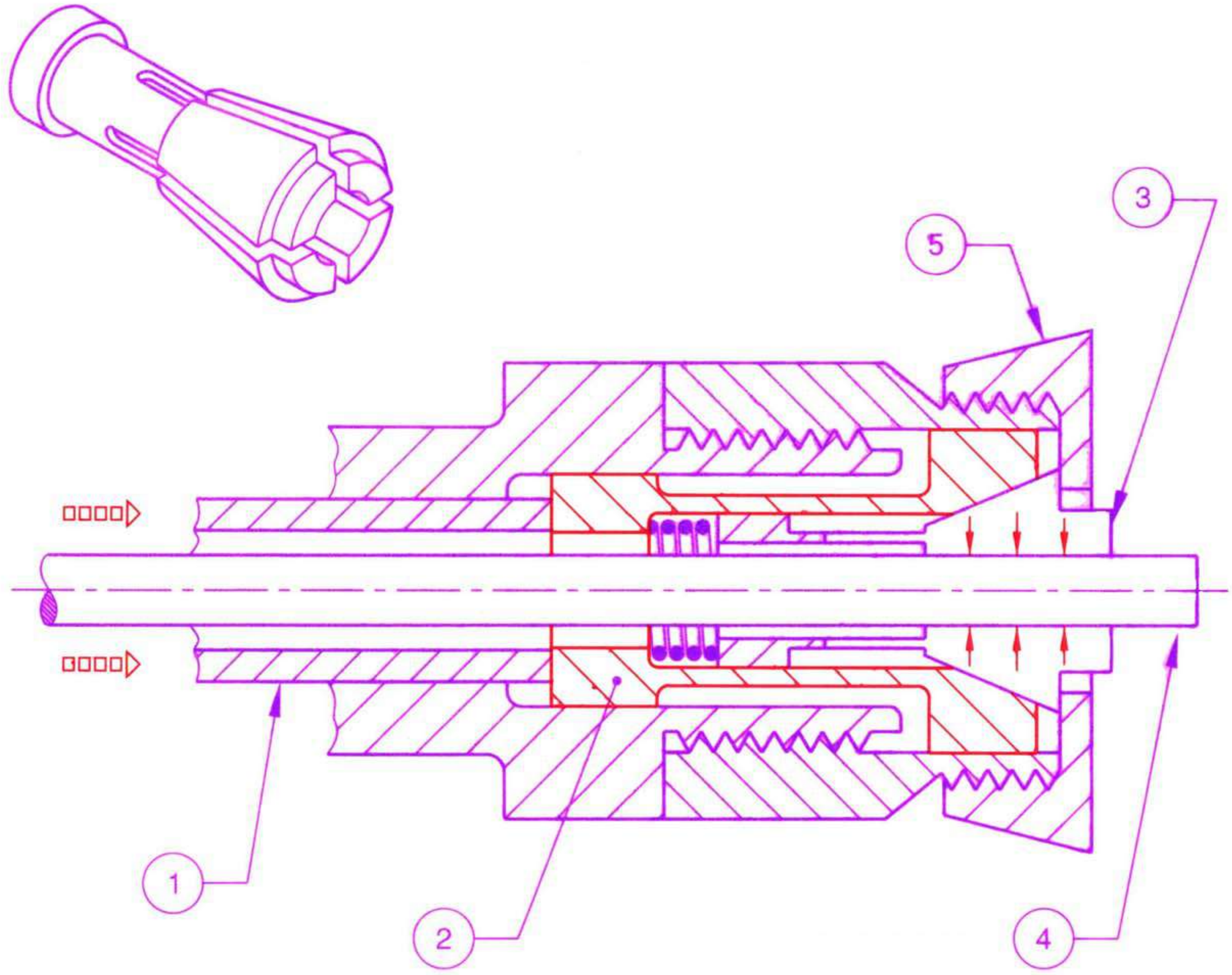

CIMI CENTRAL INSTRUCTIONAL MEDIA INSTITUTE, MADRAS
AN INDO-GERMAN PROJECT

TR 01 13 03 01 95

COPY TURNING ATTACHMENT (WORKING PRINCIPLE)

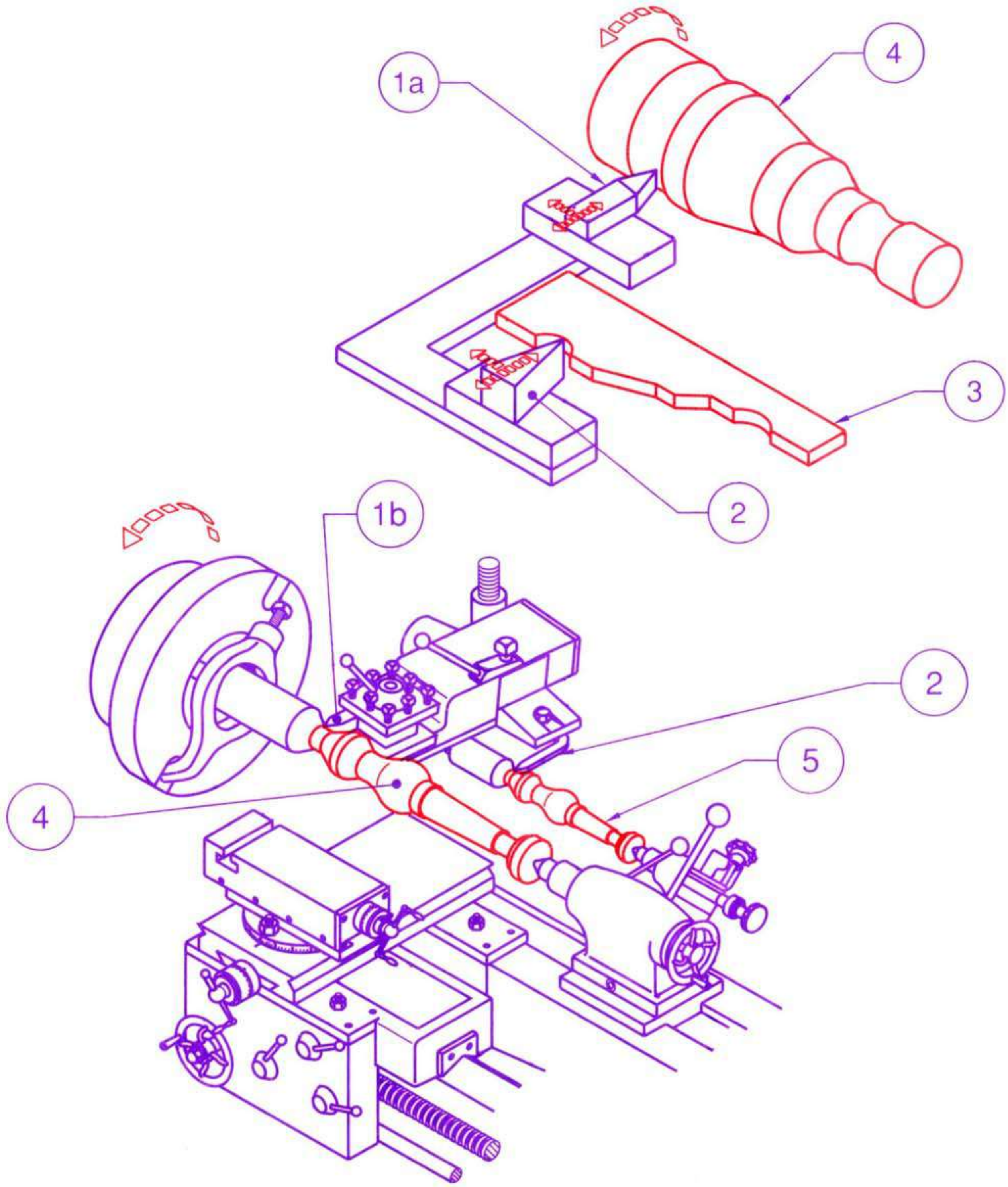

TR 01 14 02 01 95

LEADING AND FOLLOWING ANGLES (SQUARE THREADING TOOL)

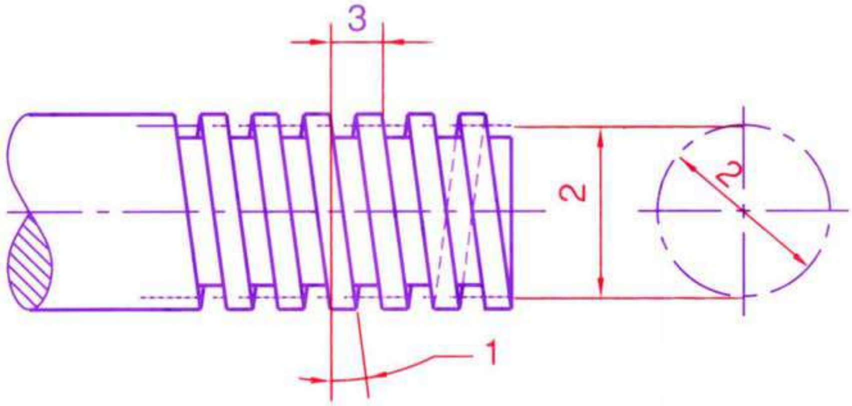

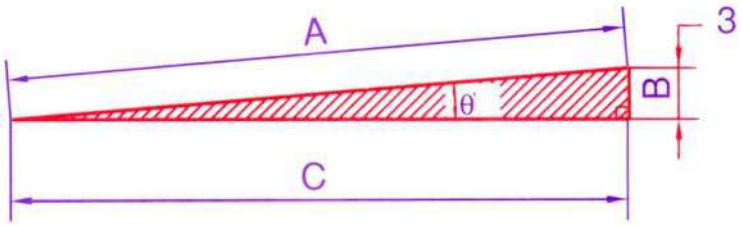

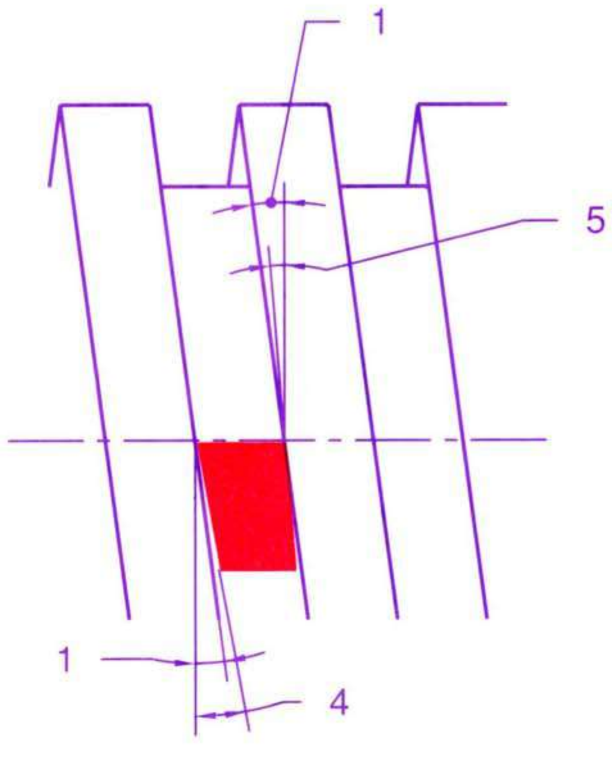

LEADING AND FOLLOWING ANGLES (ASSIGNMENT)

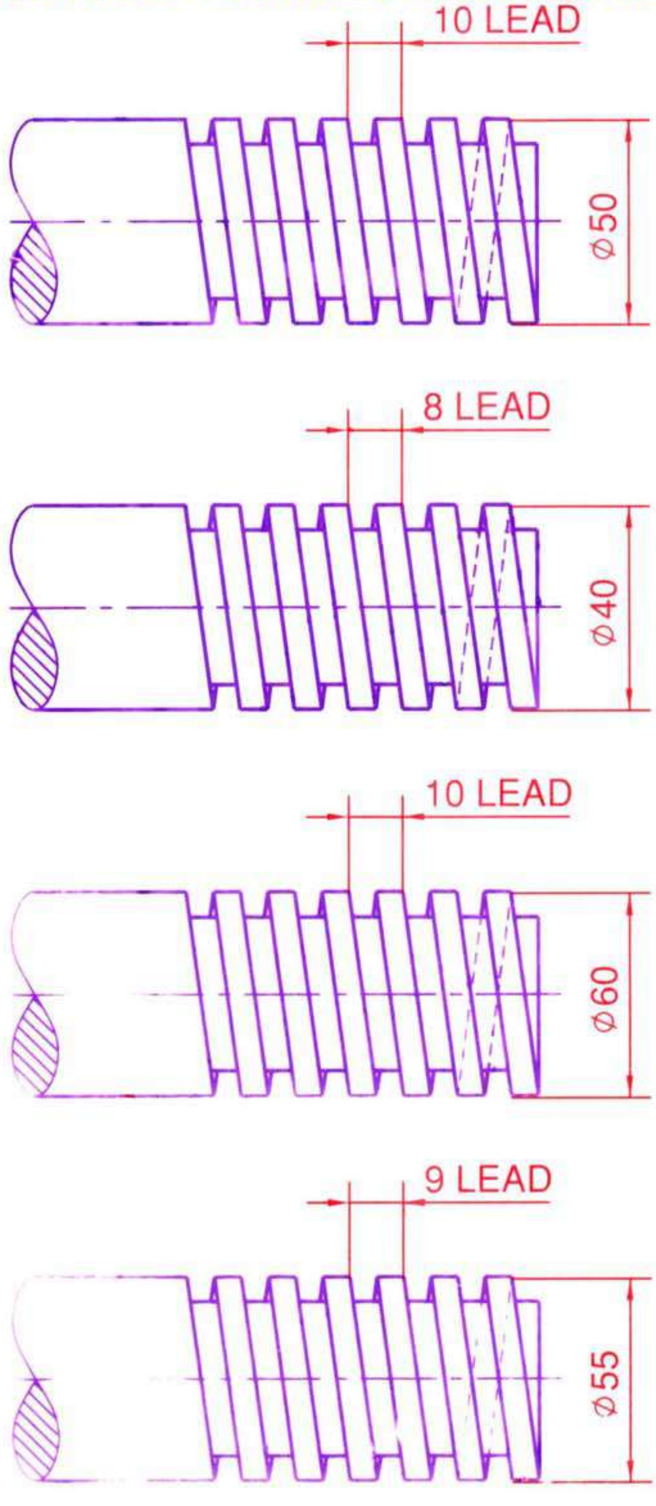

Calculate the leading and the following angles

TAPER TURNING ATTACHMENT - YOKE TYPE (PRINCIPLE)

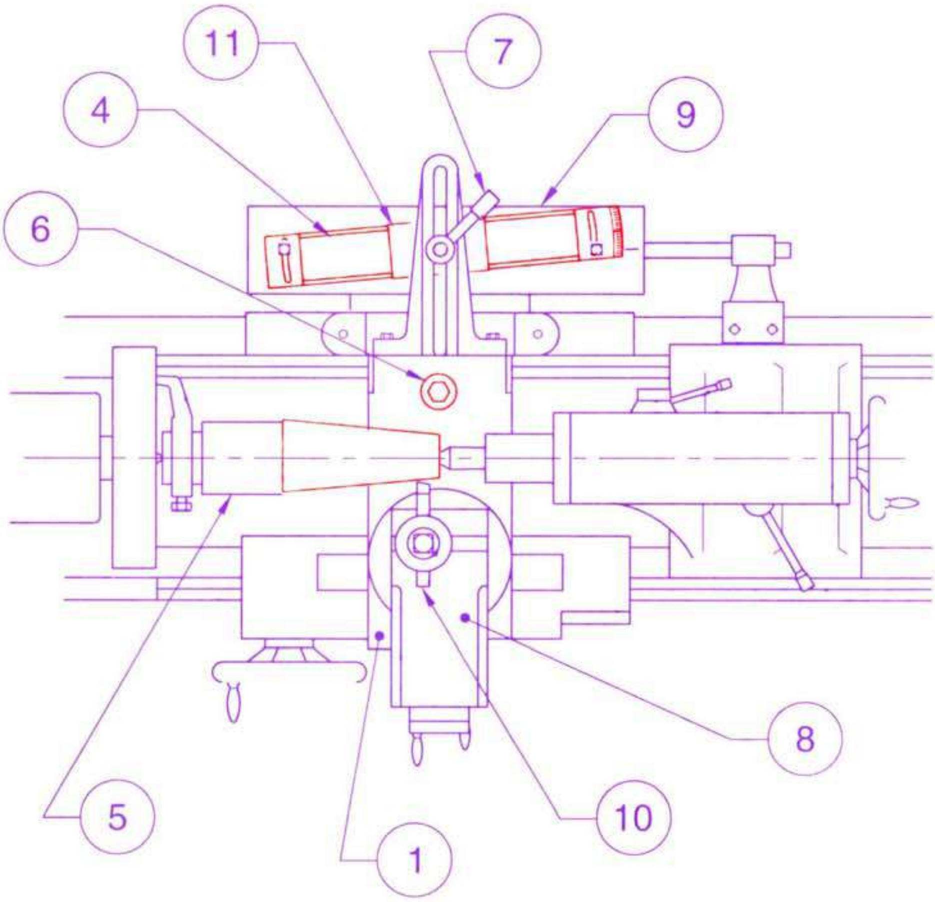

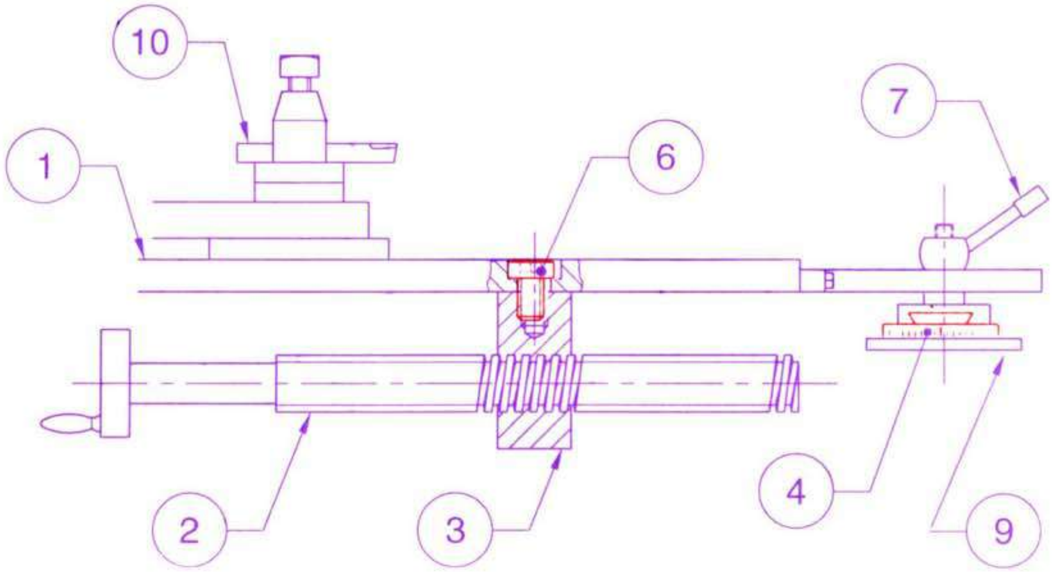

CIMI CENTRAL INSTRUCTIONAL MEDIA INSTITUTE, MADRAS
AN INDO-GERMAN PROJECT

gtz

TR 01 15 03 05 95

TAPER TURNING ATTACHMENT - TELESCOPIC TYPE

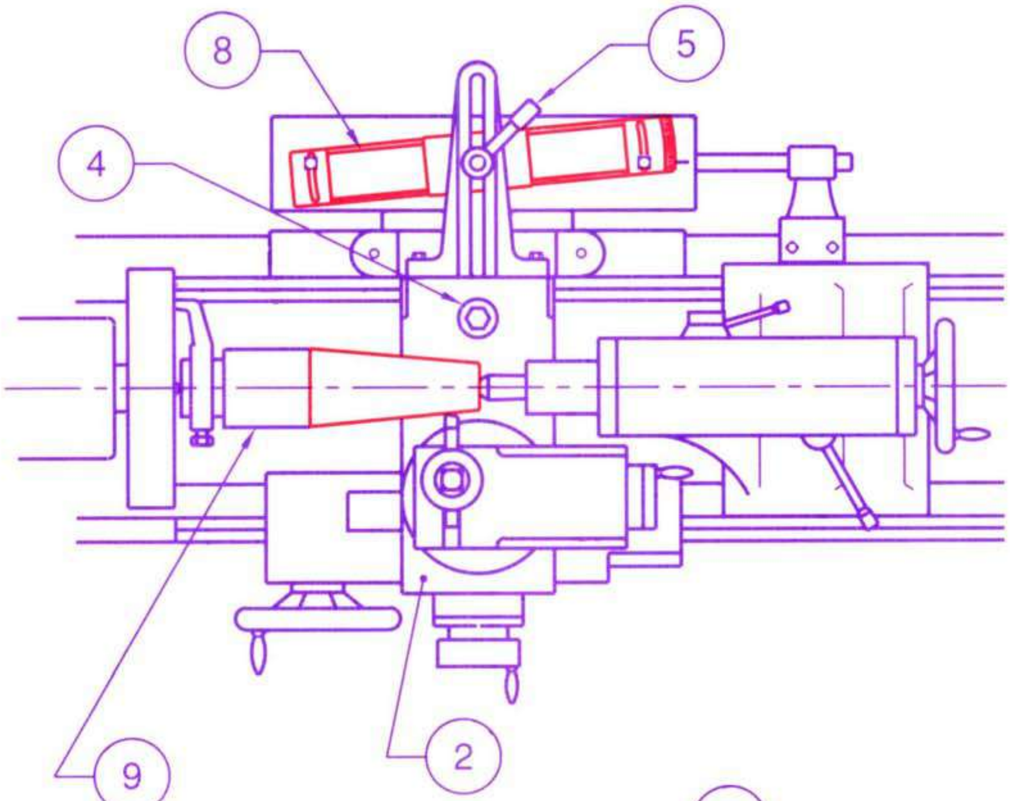

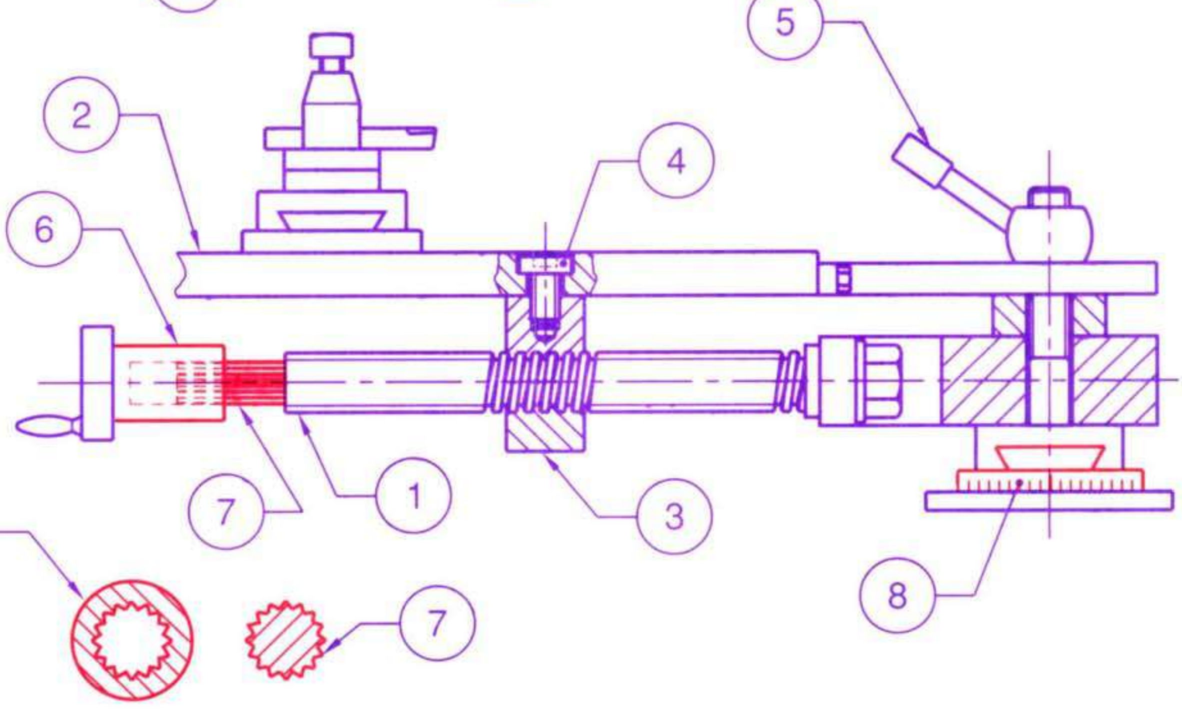

DOUBLE START THREAD (CATCH PLATE METHOD)

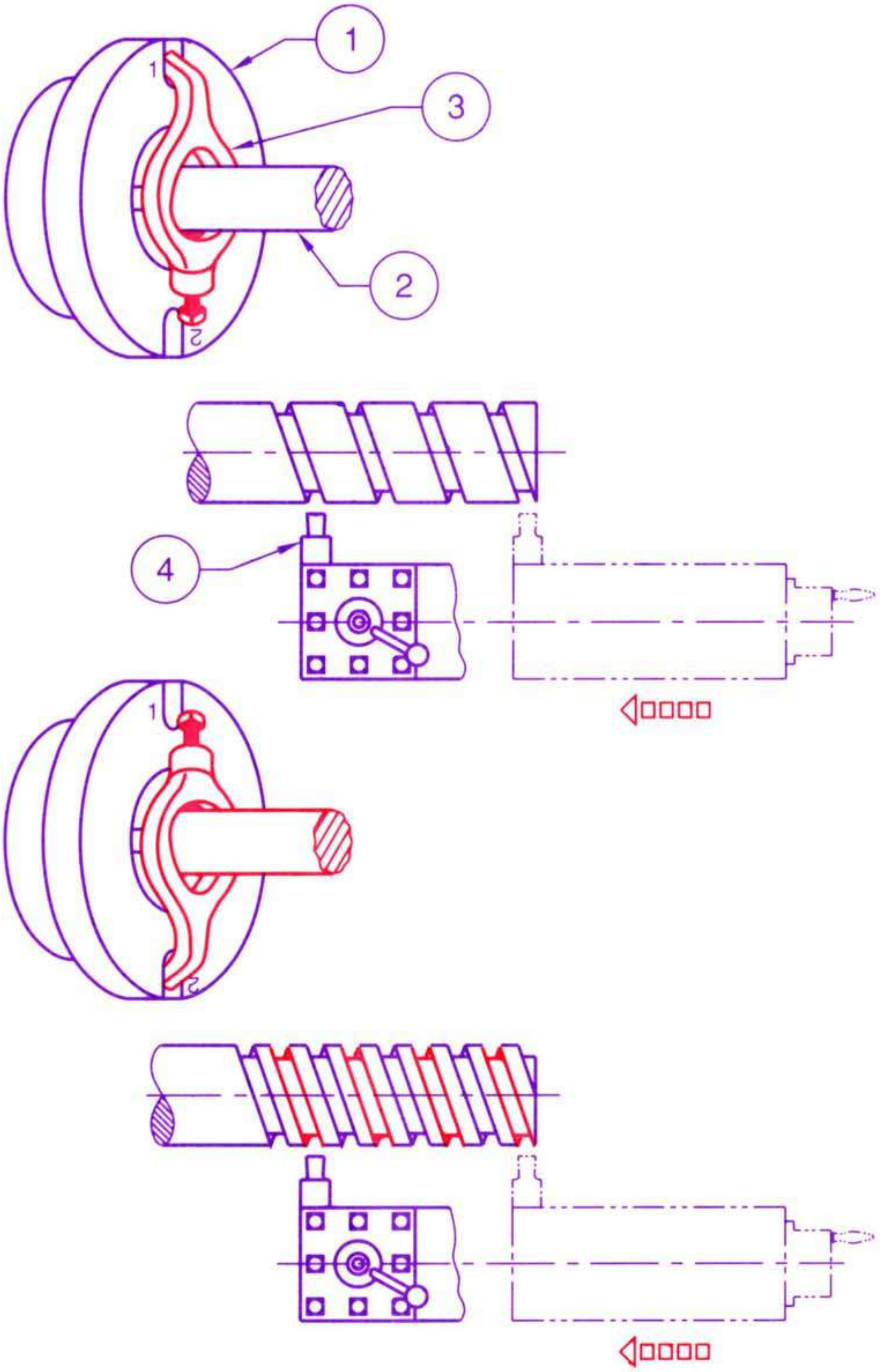

DOUBLE START THREAD (DIVIDING THE GEAR METHOD)

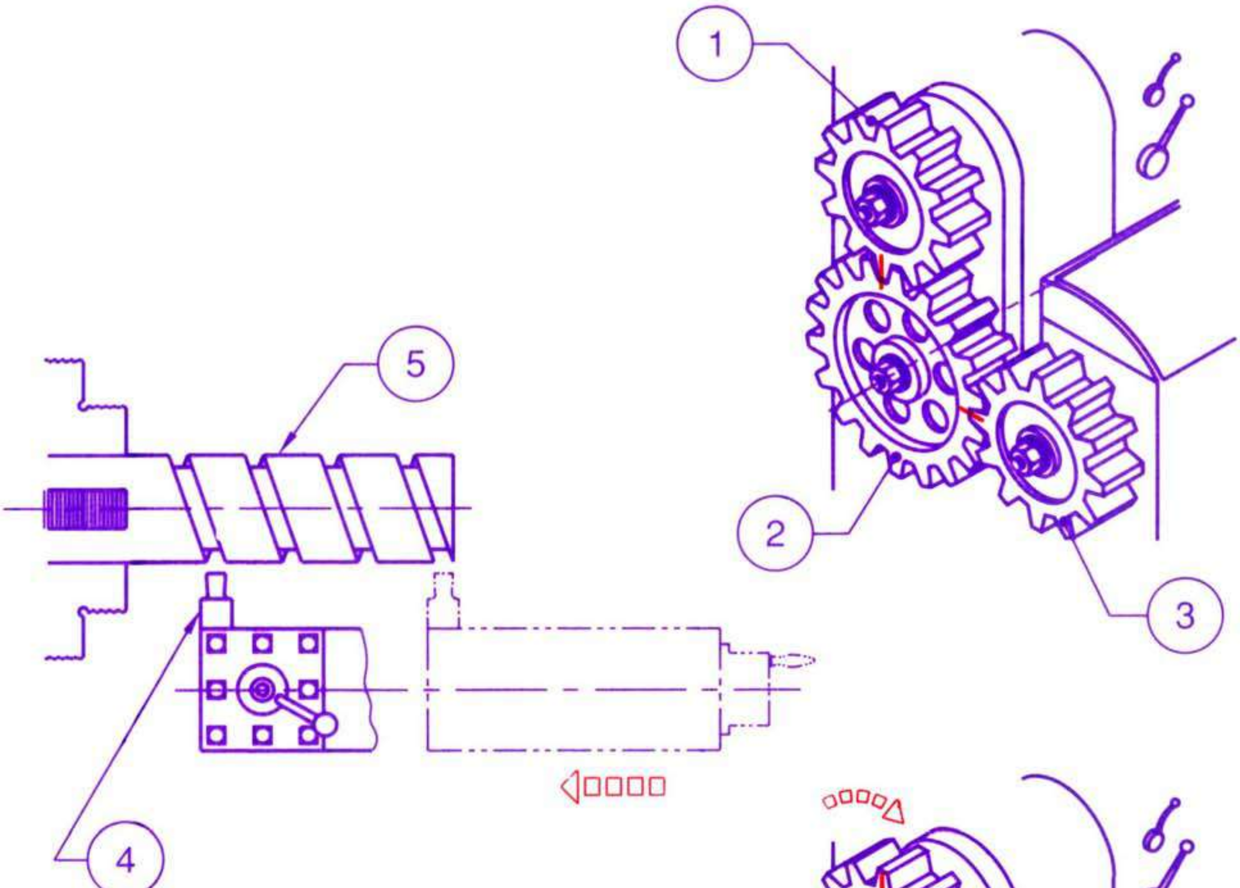

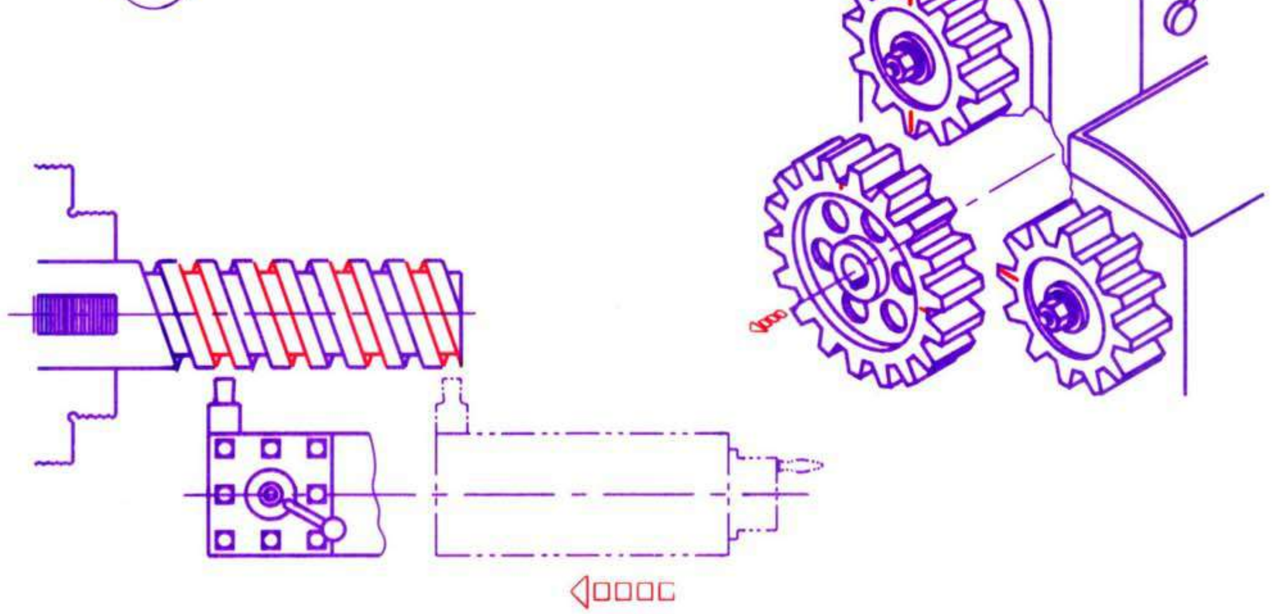

TR 01 15 04 03 95

DOUBLE START THREAD (GRADUATED COLLAR METHOD)

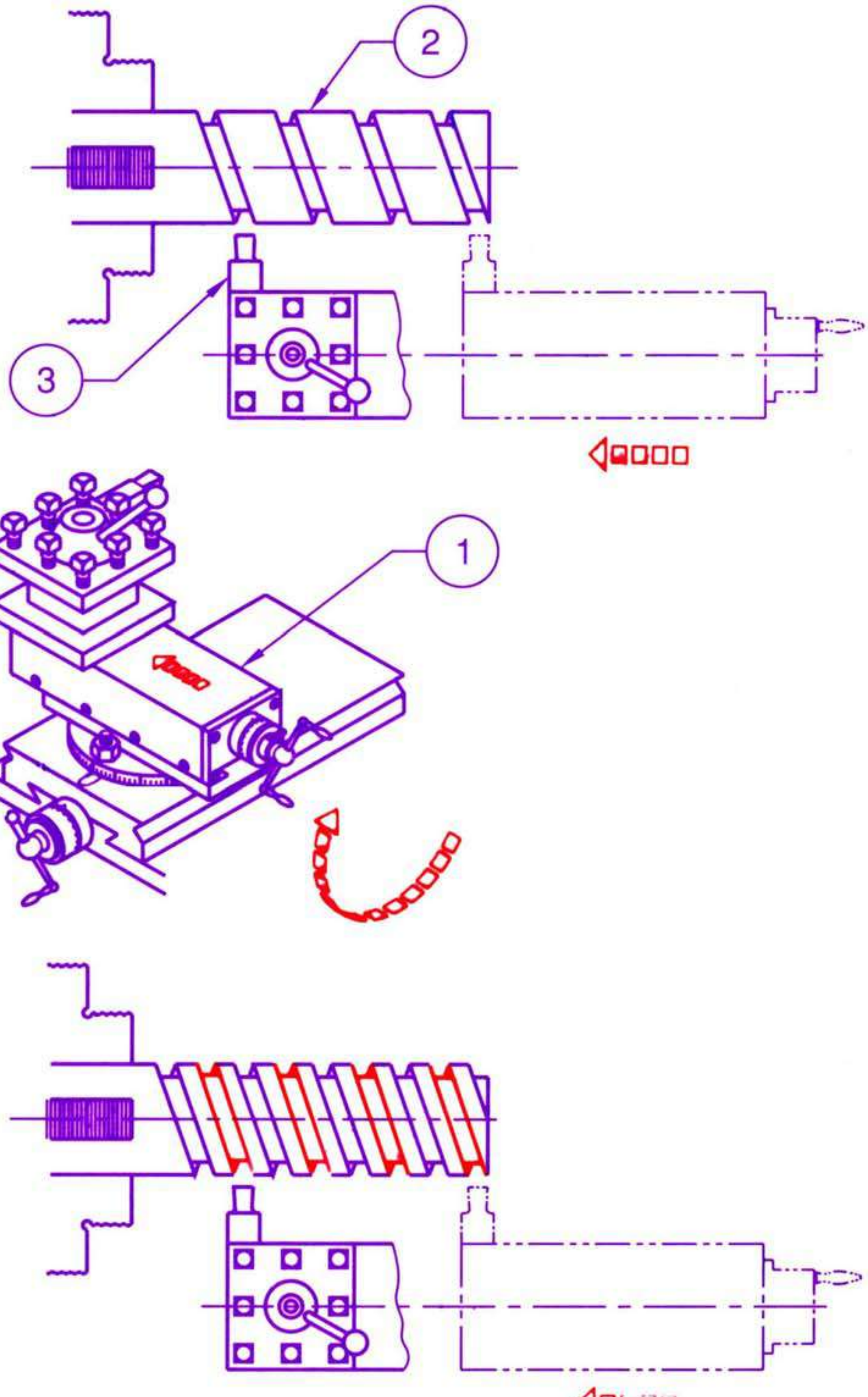

THREAD CUTTING BY HALF ANGLE METHOD (PRINCIPLE)

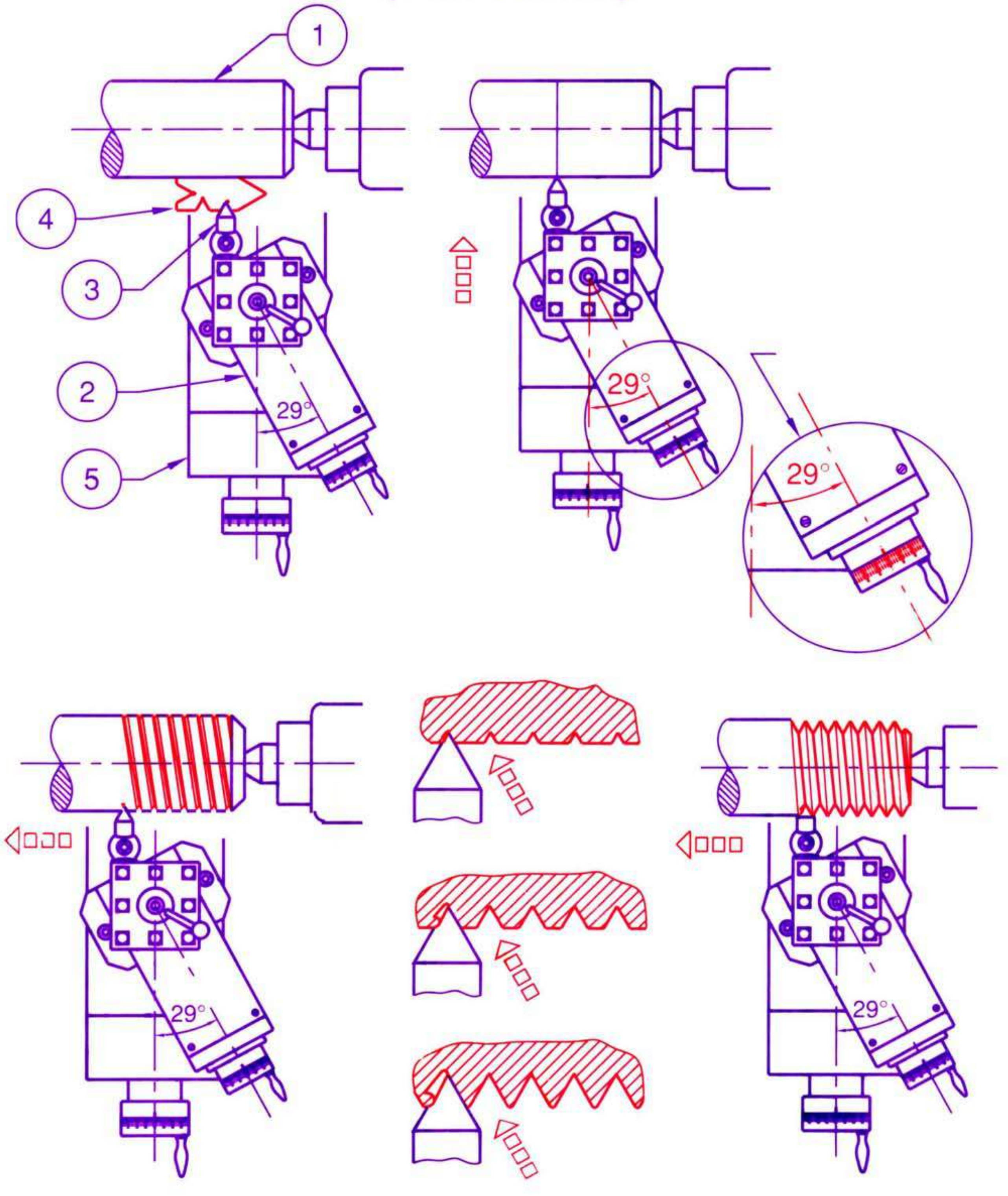

TURNER
1st YEAR
TRANSPARENCIES

CIMI CENTRAL INSTRUCTIONAL MEDIA INSTITUTE, CHENNAI

AN INDO - GERMAN PROJECT

gtz

Directorate General of Employment & Training, Ministry of Labour, Govt. of India.

Developed by
CENTRAL INSTRUCTIONAL MEDIA INSTITUTE
in collaboration with DEUTSCHE GESELLSCHAFT FUER TECHNISCHE ZUSAMMENARBEIT (GTZ) Germany
P.O.Box 3142, 76, GST Road, Guindy, Chennai - 600 032. Phone : 234 5256, 234 5257. Fax : (0091 44) 234 2791

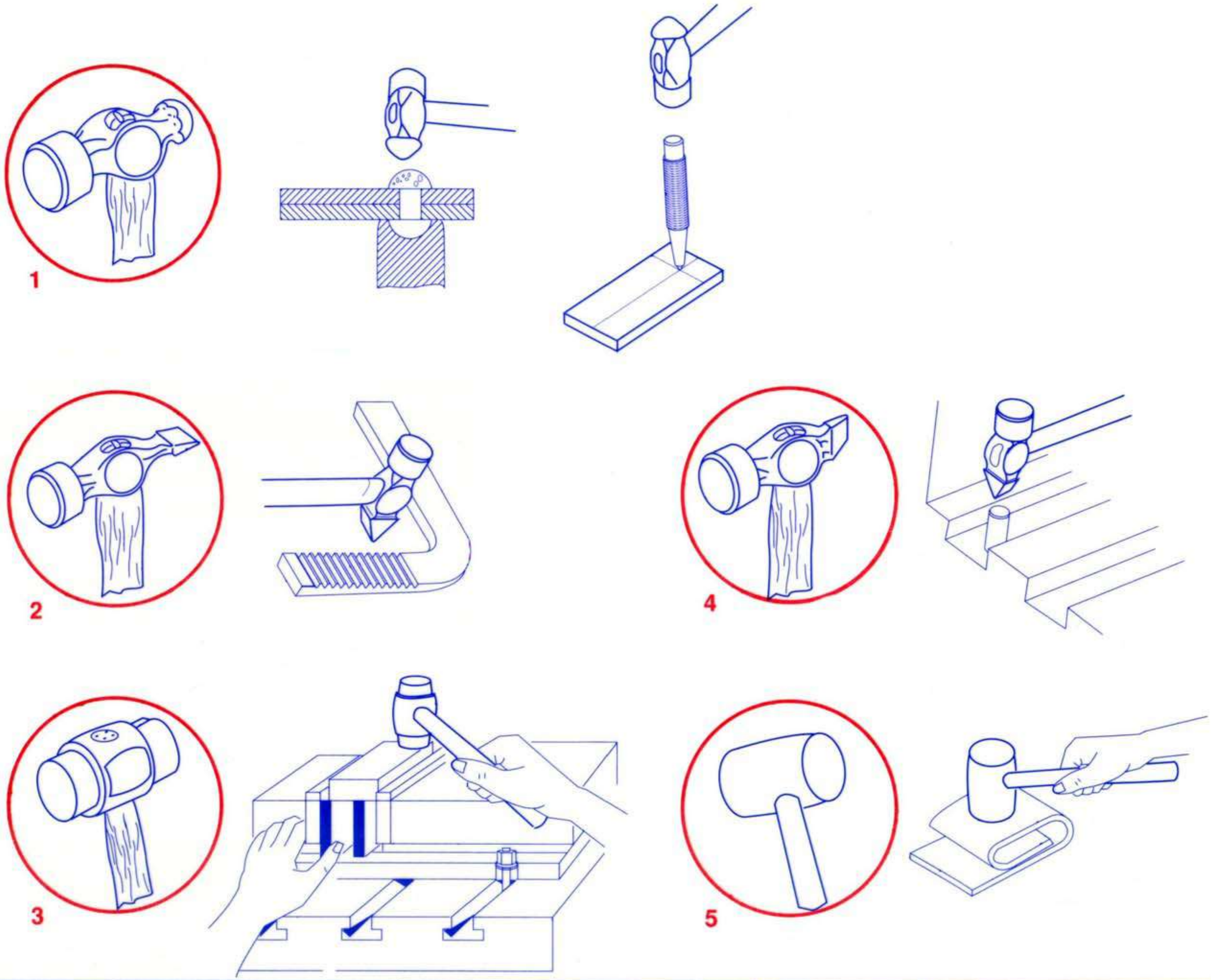

HAND HAMMERS - APPLICATIONS

TR 01 01 01 01 93

CIMI CENTRAL INSTRUCTIONAL MEDIA INSTITUTE, MADRAS
AN INDO-GERMAN PROJECT

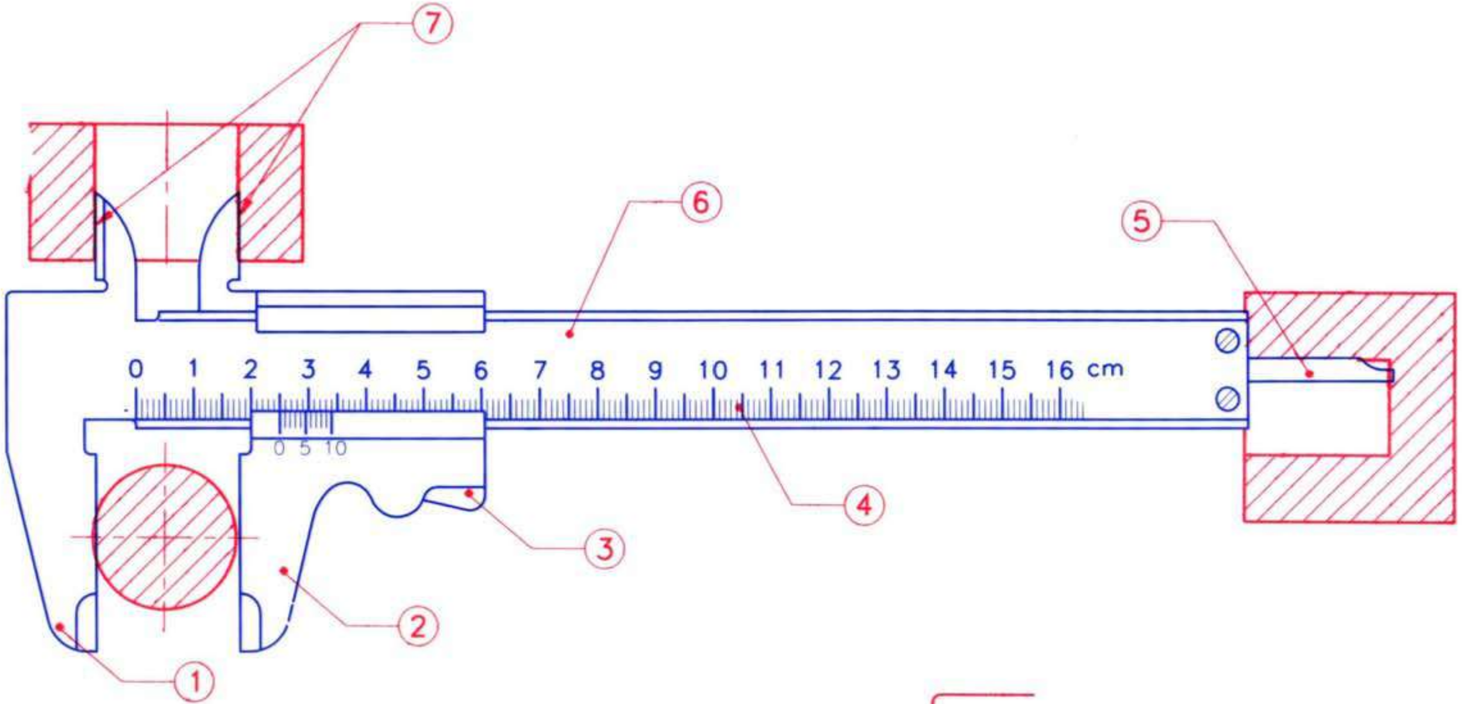

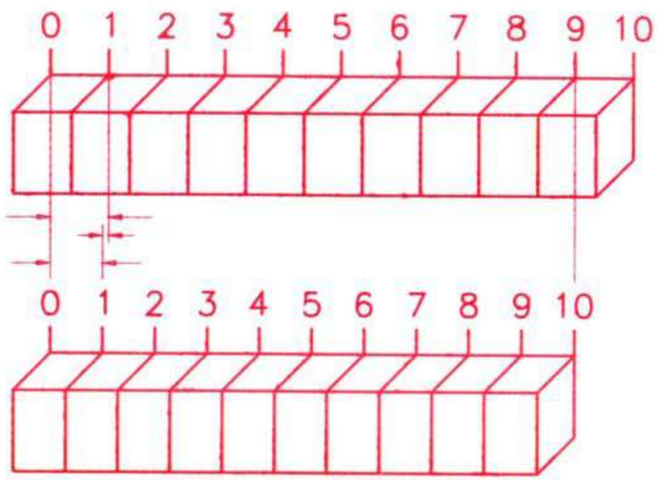

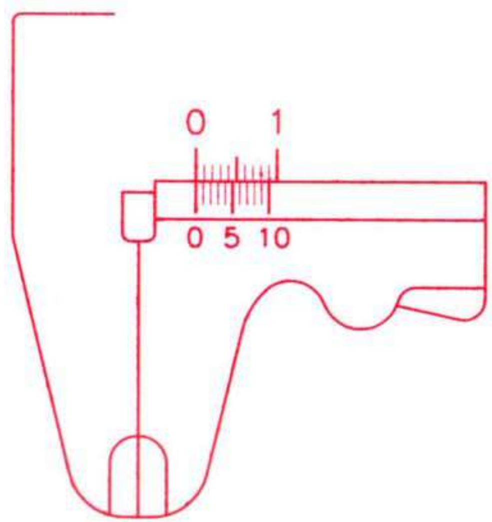

VERNIER CALIPER PARTS AND PRINCIPLE

TR 01 02 01 01 93

CIMI CENTRAL INSTRUCTIONAL MEDIA INSTITUTE, MADRAS
AN INDO-GERMAN PROJECT

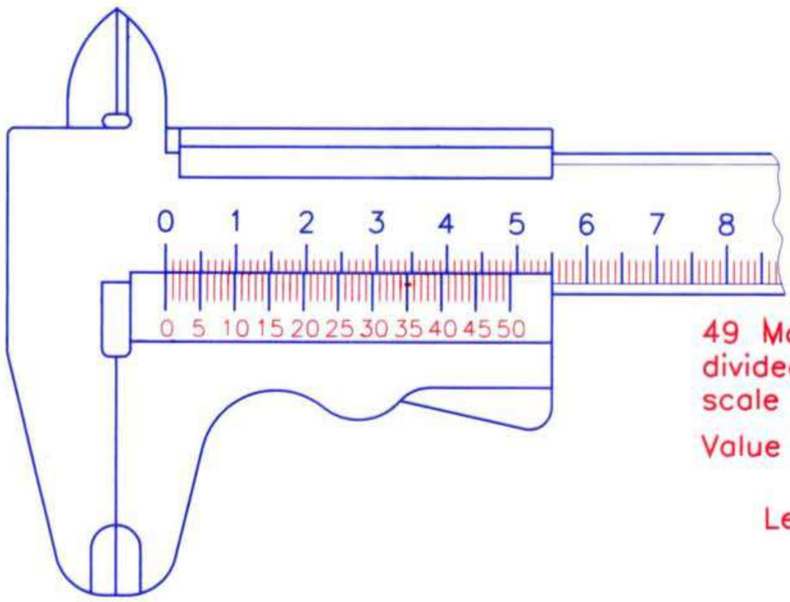

49 Main scale divisions are divided into 50 vernier scale divisions

Value of 1 VSD $= \frac{49}{50}$ mm

Least count = 1 MD − 1 VSD

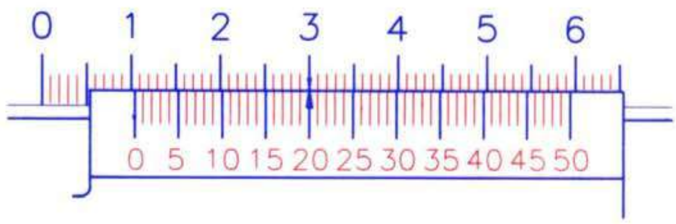

Main scale reading =

Value of coinciding vernier division } =

Reading =

Assignments:−

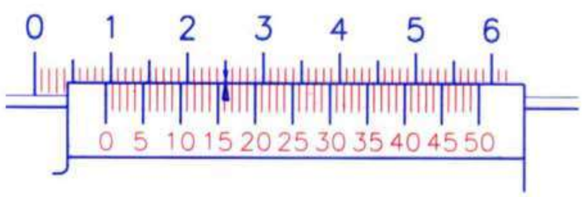

A Reading

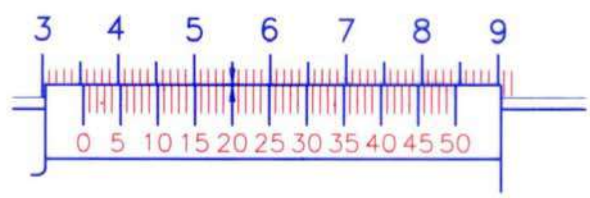

B Reading

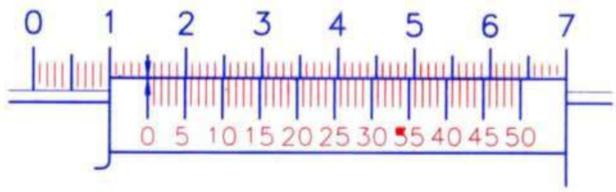

C Reading

D Reading

READING OF VERNIER CALIPER	TR 01 02 01 02 93	CIMI CENTRAL INSTRUCTIONAL MEDIA INSTITUTE, MADRAS AN INDO-GERMAN PROJECT

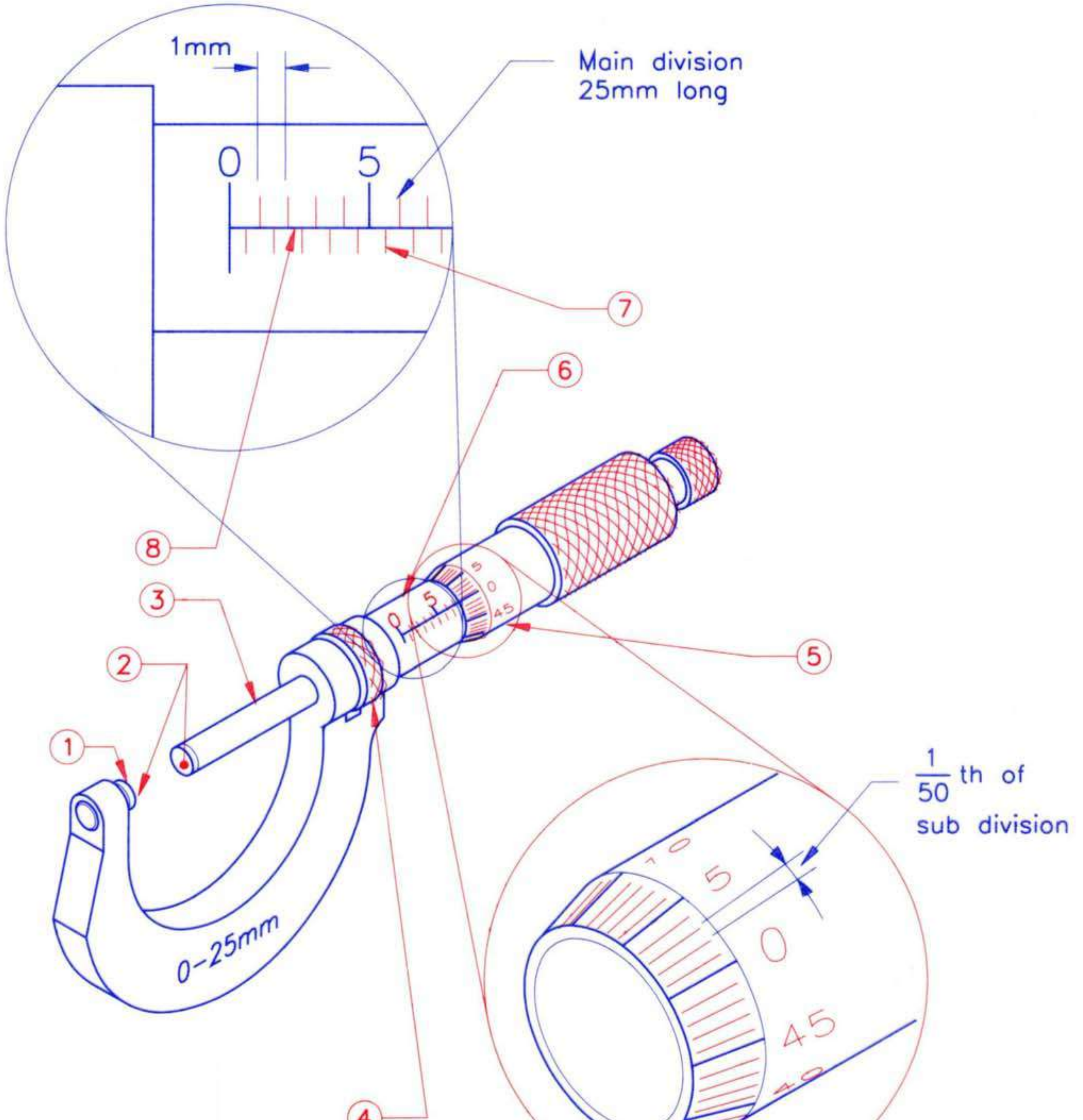

Least count = $\frac{1}{50}$ th of 0.5

=

MICROMETER **PARTS AND GRADUATIONS**	TR 01 02 02 01 93	CIMI CENTRAL INSTRUCTIONAL MEDIA INSTITUTE, MADRAS AN INDO-GERMAN PROJECT

Micrometer graduations

Main division
1mm graduations

0.5mm – one rotation of thimble-
graduated into 50 parts

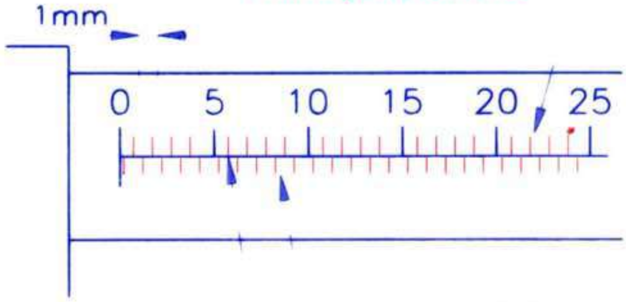

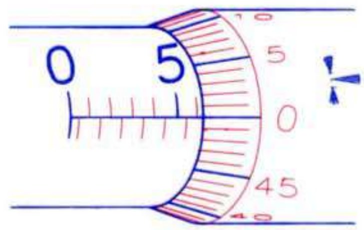

$\frac{1}{50}$ th of 0.5
= 0.01

Datum line

Sub division
0.5mm graduations

Thimble divisions
0.01mm graduations

Micrometer reading

Main divisions
2x1mm = 2.00mm

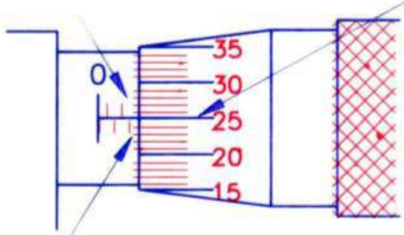

Thimble divisions
25x0.1mm
= 0.25mm

Sub division
1x0.5mm
= 0.5mm

Main divisions =
Sub division =
Thimble divisions =
Reading =

Example

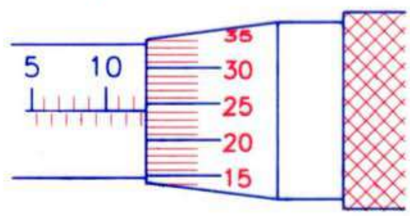

Main divisions =
Sub division =
Thimble divisions =
Reading =

Assignments:–

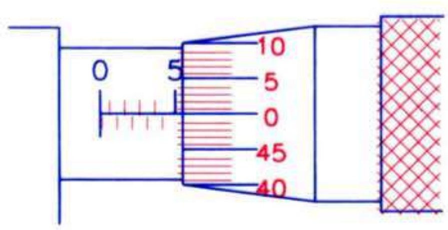

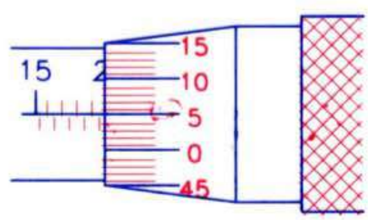

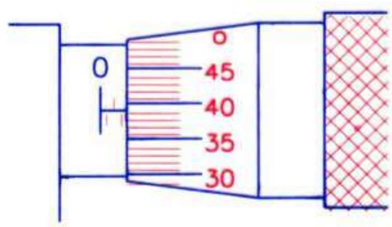

A Reading

B Reading

C Reading

MICROMETER READING | TR 01 02 02 02 93 | CIMI CENTRAL INSTRUCTIONAL MEDIA INSTITUTE, MADRAS AN INDO-GERMAN PROJECT

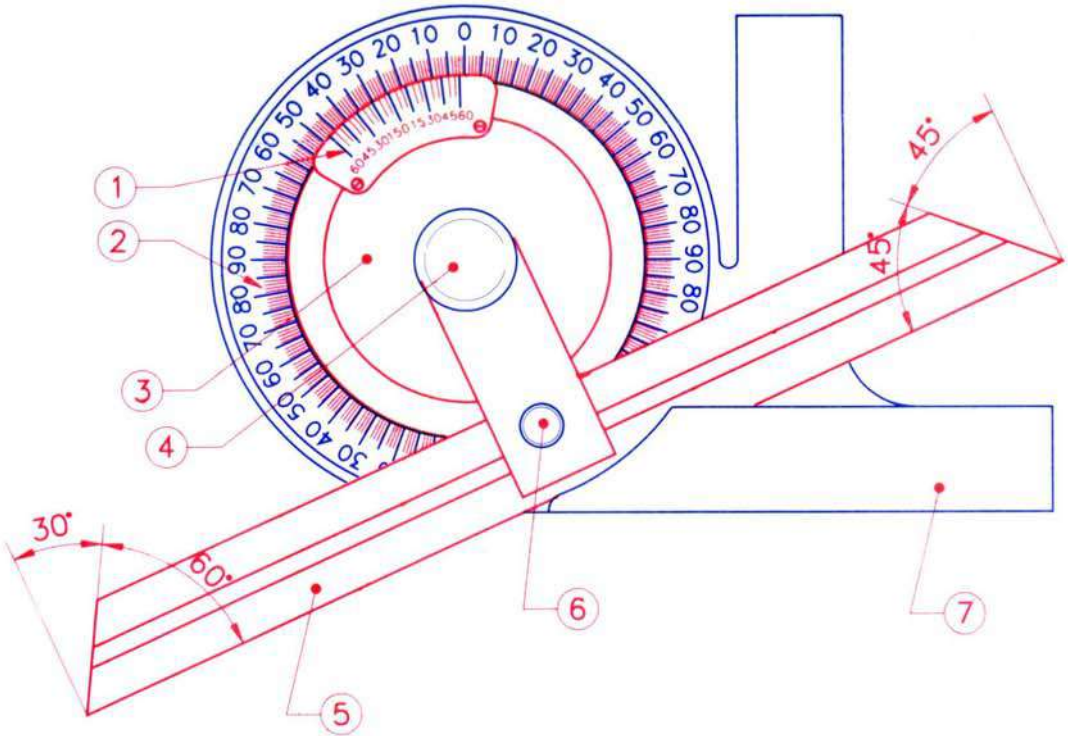

Applications:-

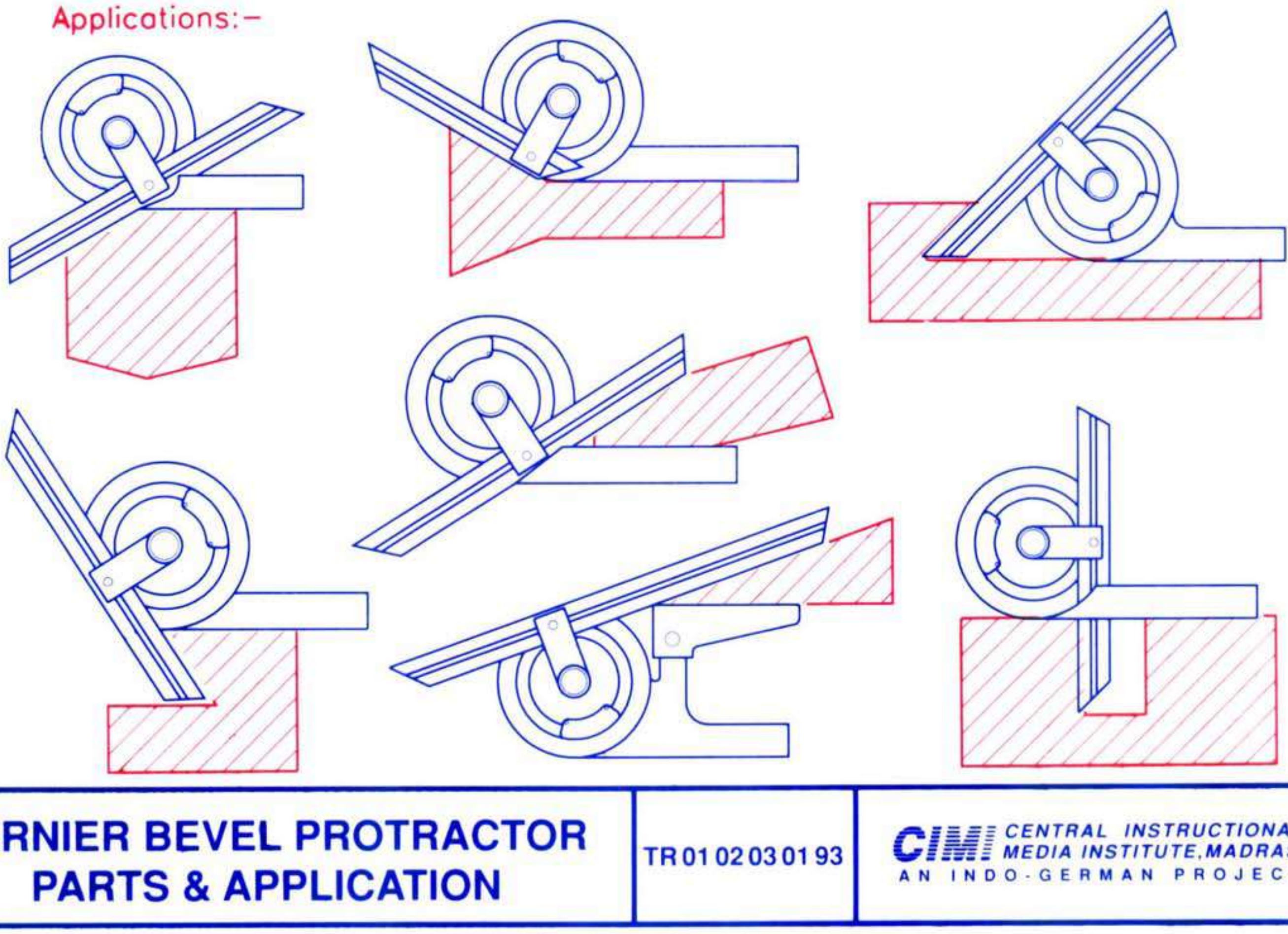

VERNIER BEVEL PROTRACTOR **PARTS & APPLICATION**	TR 01 02 03 01 93	CIMI CENTRAL INSTRUCTIONAL MEDIA INSTITUTE, MADRAS AN INDO-GERMAN PROJECT

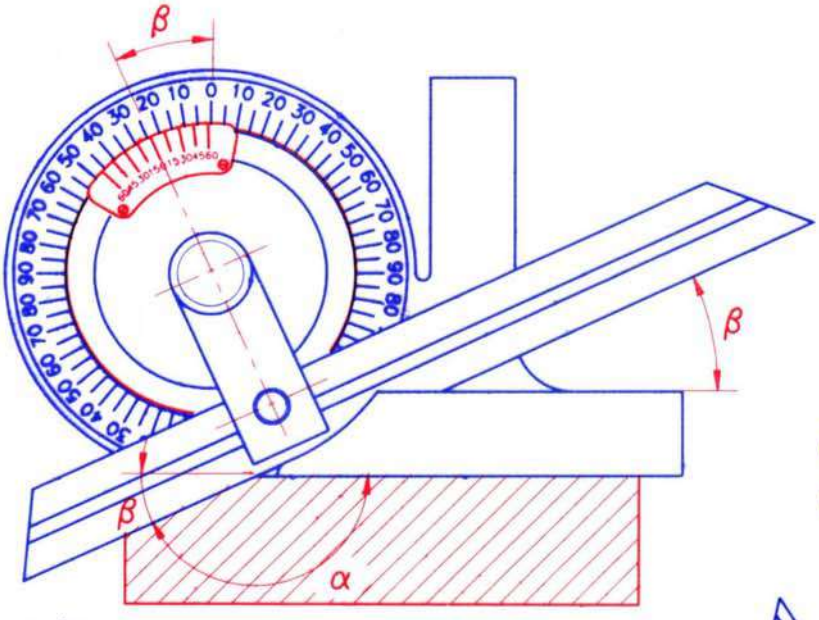

Obtuse angle

$\alpha = 180^\circ - \beta$

Assignments:-

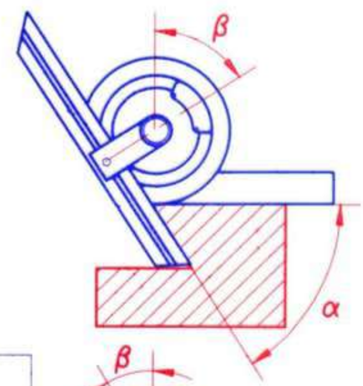

A Reading

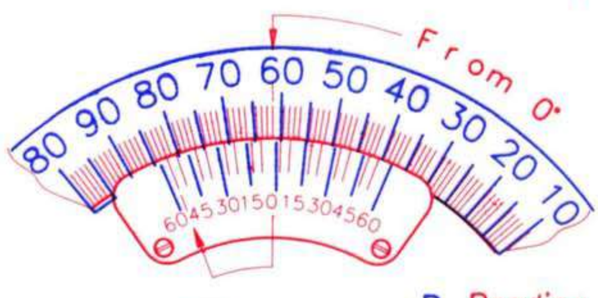

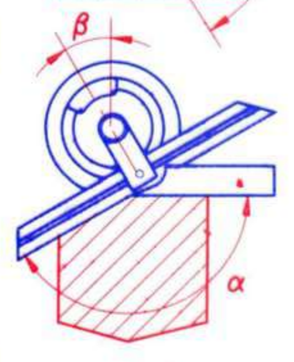

B Reading

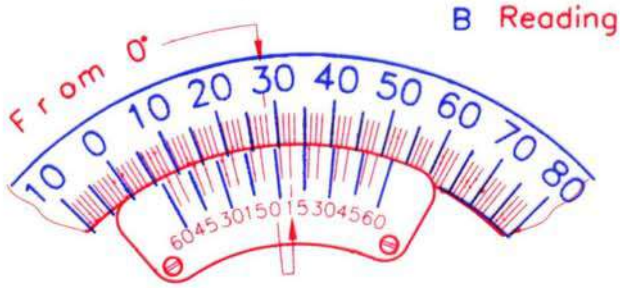

C Reading

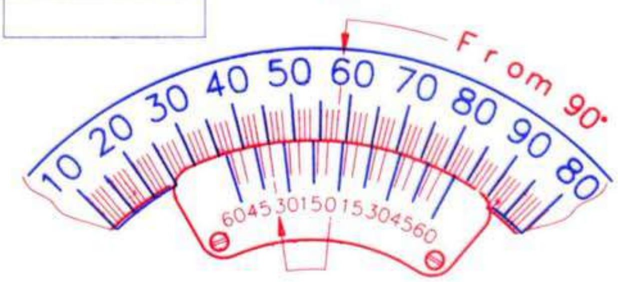

D Reading

BEVEL PROTRACTOR READING | TR 01 02 03 02 93 | CIMI CENTRAL INSTRUCTIONAL MEDIA INSTITUTE, MADRAS AN INDO-GERMAN PROJECT

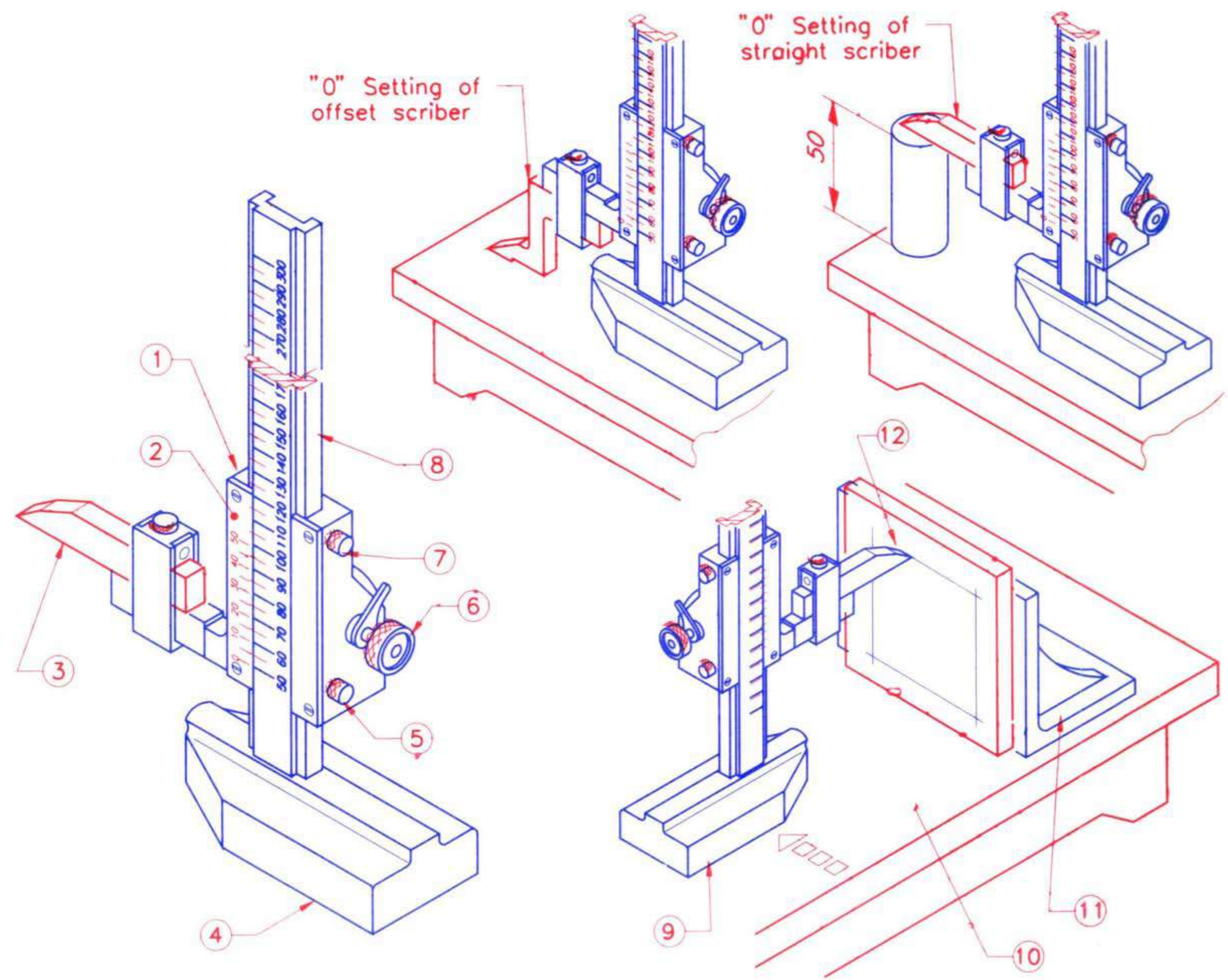

VERNIER HEIGHT GAUGE

TR 01 02 04 01 93

CIMI CENTRAL INSTRUCTIONAL MEDIA INSTITUTE, MADRAS
AN INDO GERMAN PROJECT

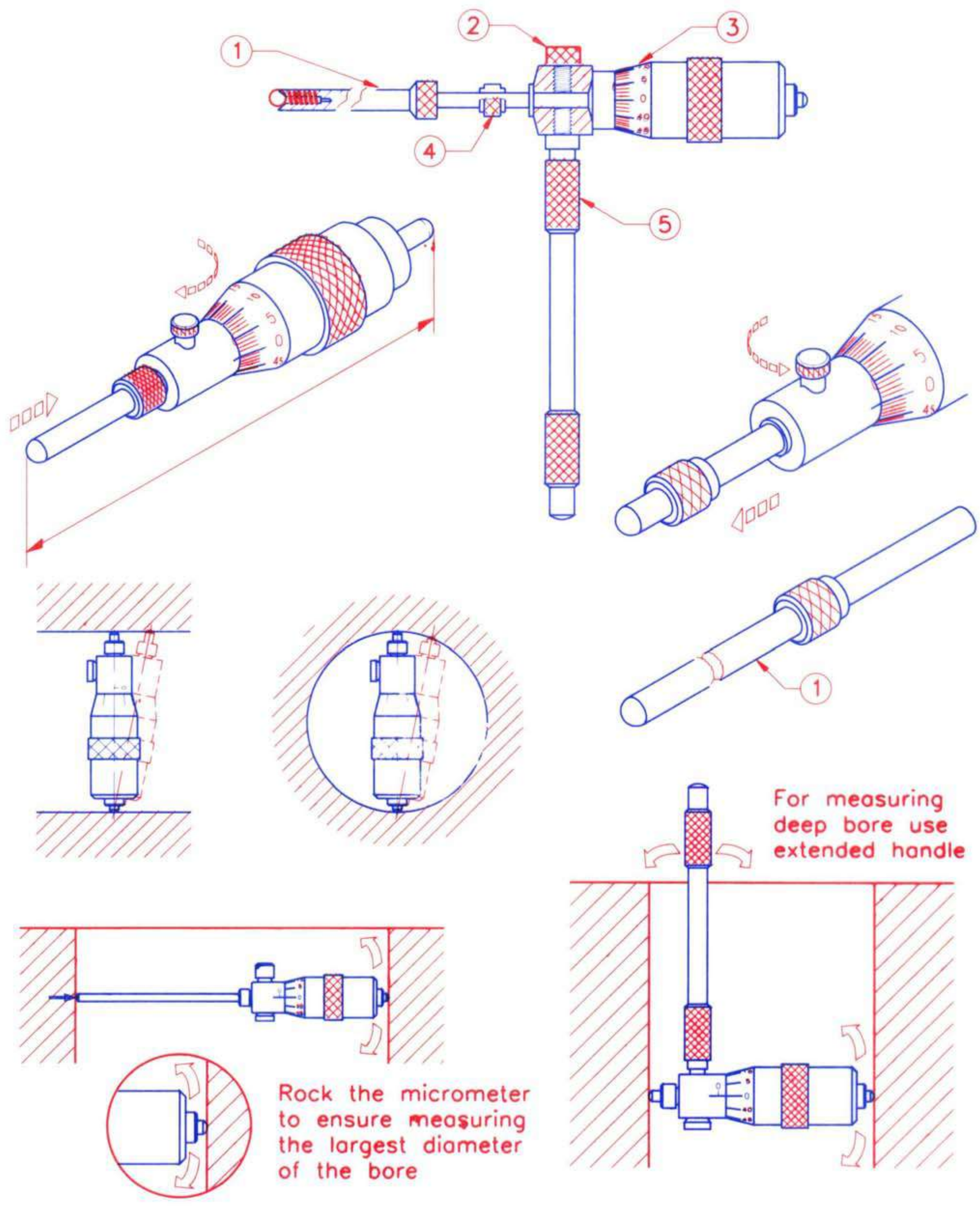

INSIDE MICROMETER	TR 01 02 05 01 93	CIMI CENTRAL INSTRUCTIONAL MEDIA INSTITUTE, MADRAS AN INDO-GERMAN PROJECT

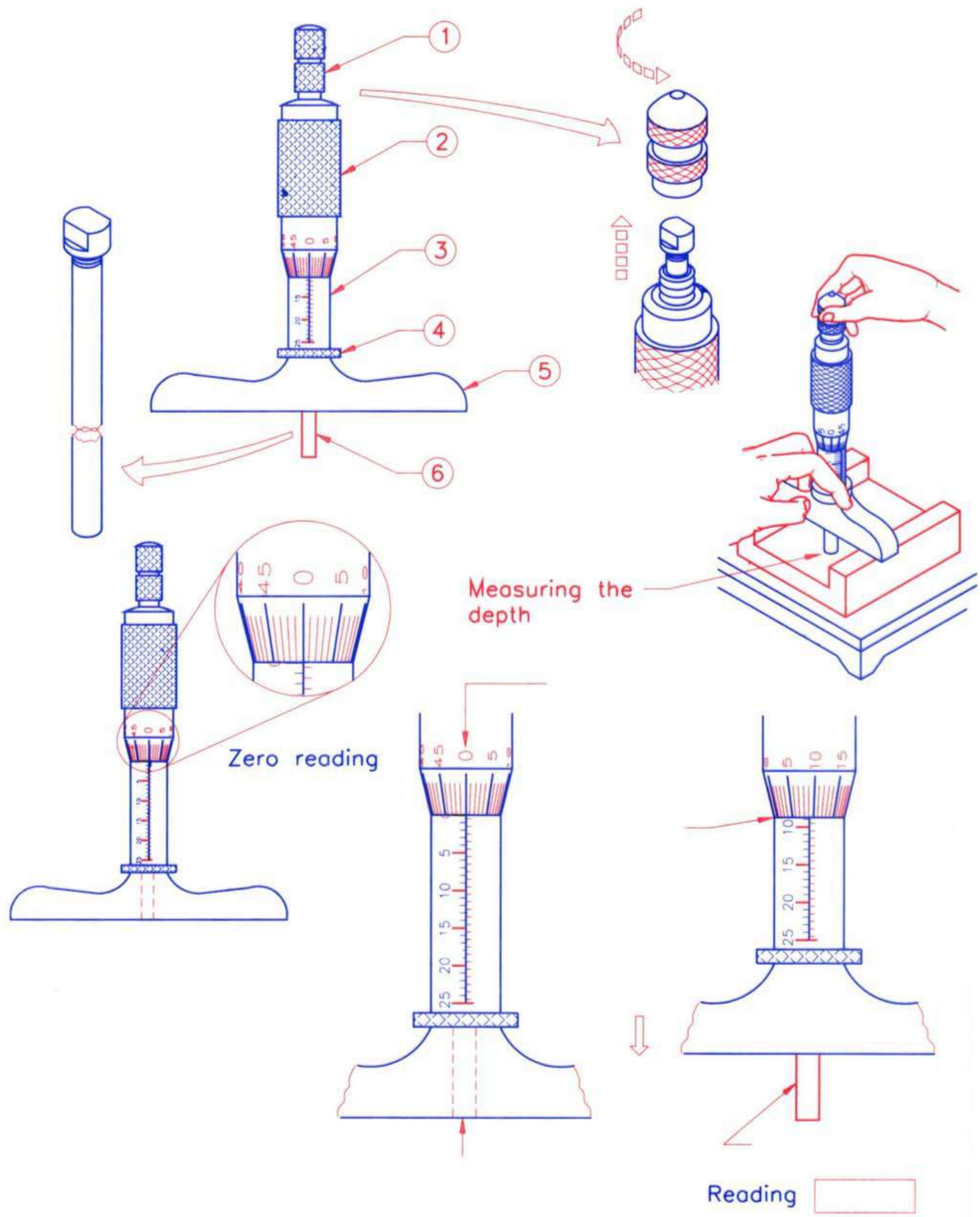

DEPTH MICROMETER

TR 01 02 06 01 93

CIMI CENTRAL INSTRUCTIONAL MEDIA INSTITUTE, MADRAS
AN INDO-GERMAN PROJECT

GRINDING WHEEL MARKING

51-A-46-H-5-V-8

Type of abrasive

A - Aluminium oxide
C - Silicon carbide

51-A-46-H-5-V-8

Grain size : (grit)
The actual size of the abrasive grain

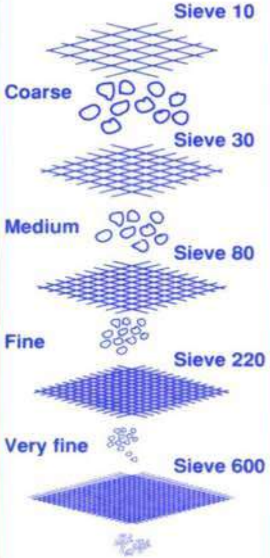

51-A-46-H-5-V-8

Grade :
The strength of the bond holds the grain in position

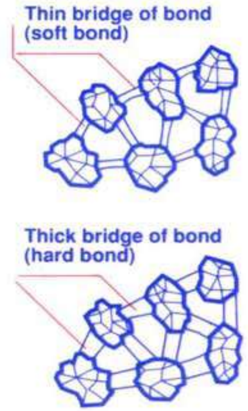

51-A-46-H-5-V-8

Structure :
The amount of bond present between the abrasive grains.

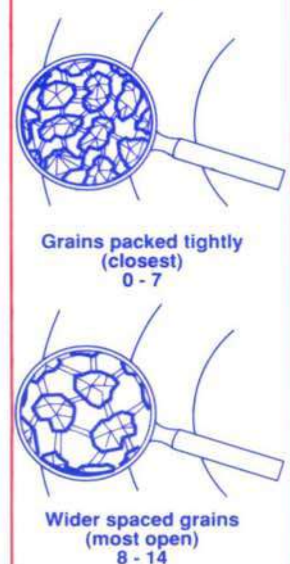

51-A-46-H-5-V-8

Type of bond

V - Vitrified
S - Silicate
R - Rubber
RF - Rubber reinforced
B - Resinoid (Synthetic resins)
BF - Resinoid reinforced
E - Shellac
Mg - Magnesia

51-A-46-H-5-V-8

Manufacturer's symbol for abrasive (Optional)

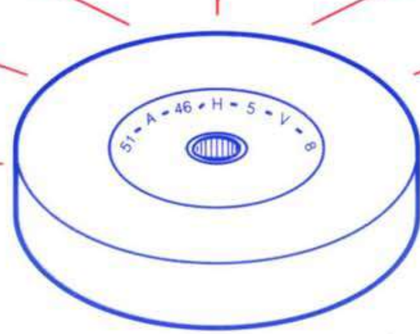

51-A-46-H-5-V-8

Manufacturer's own identification mark for the wheel (Optional)

CIMI CENTRAL INSTRUCTIONAL MEDIA INSTITUTE, MADRAS
AN INDO-GERMAN PROJECT

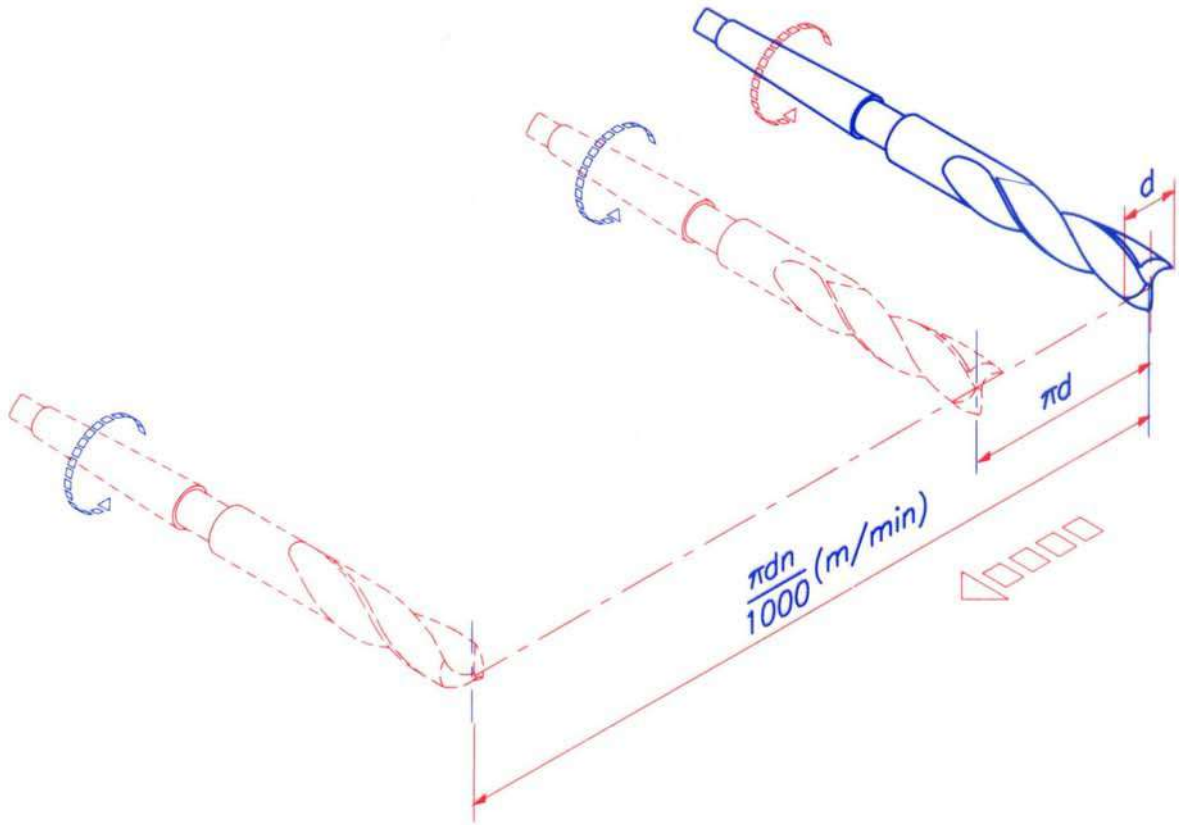

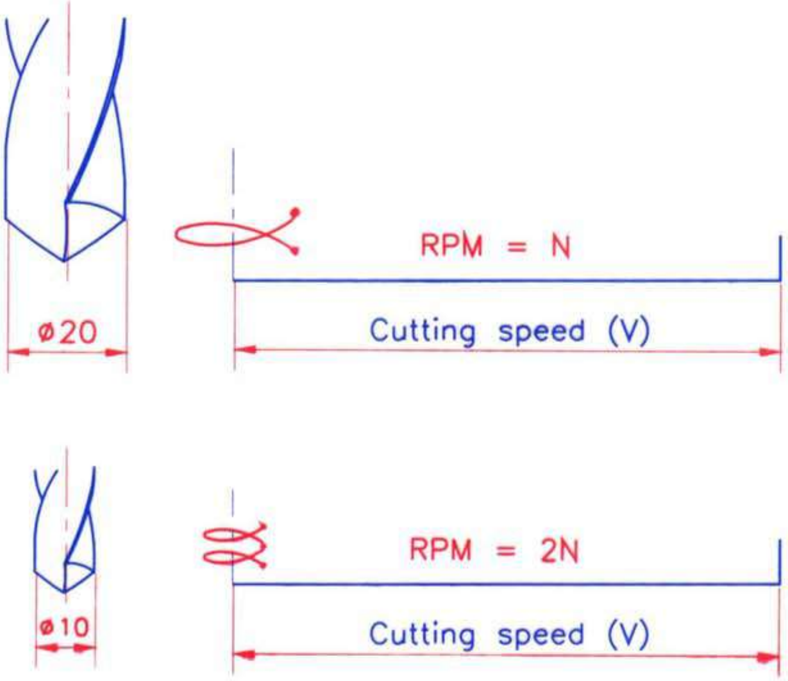

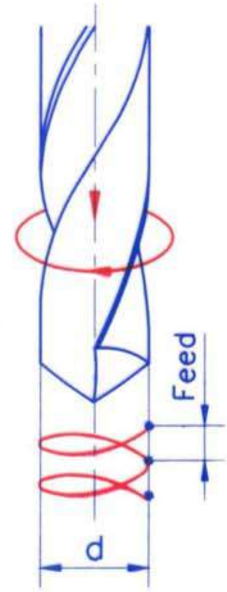

CUTTING SPEED, FEED AND R.P.M. OF DRILLS

TR 01 05 01 01 93

CIMI CENTRAL INSTRUCTIONAL MEDIA INSTITUTE, MADRAS
AN INDO-GERMAN PROJECT

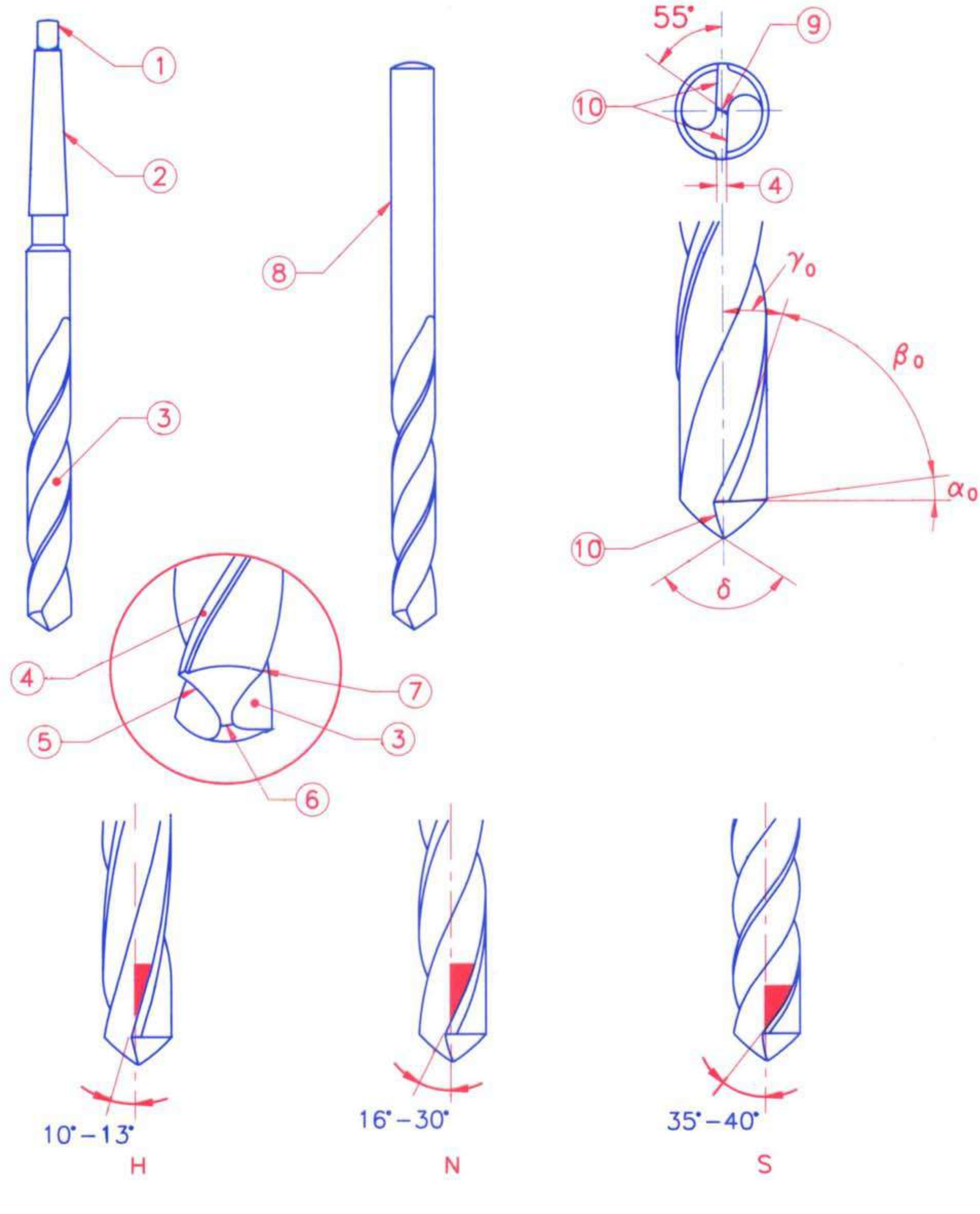

DRILL PARTS AND ANGLES

TR 01 05 02 01 93

CIMI CENTRAL INSTRUCTIONAL MEDIA INSTITUTE, MADRAS
AN INDO-GERMAN PROJECT

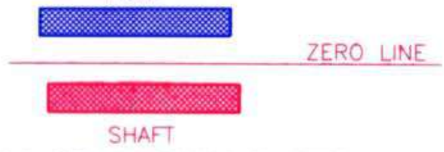

SIMPLIFIED SCHEMATIC DIAGRAM OF CLEARANCE FIT

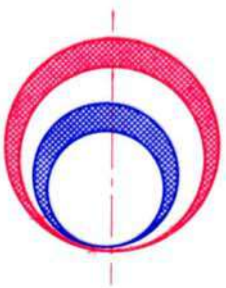

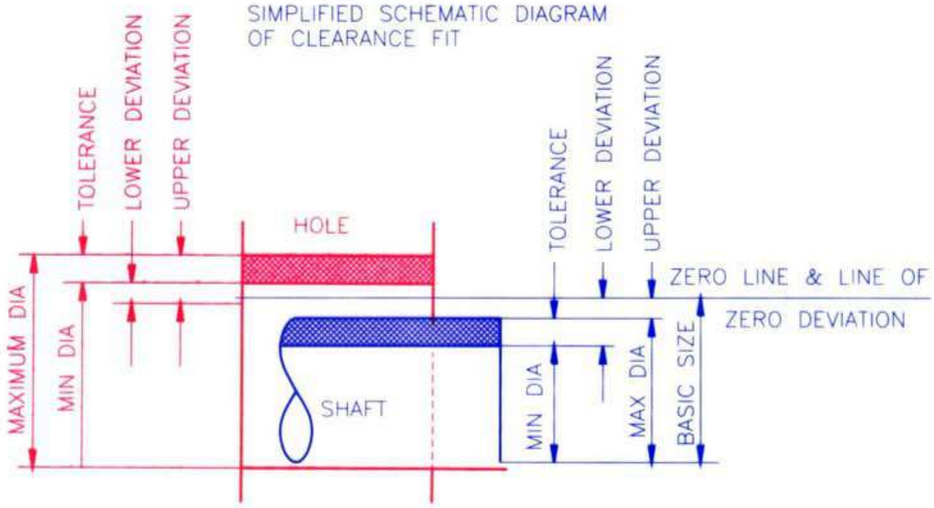

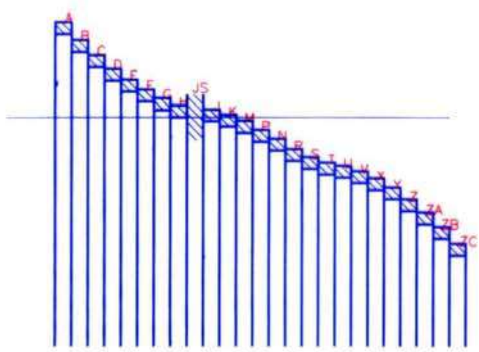

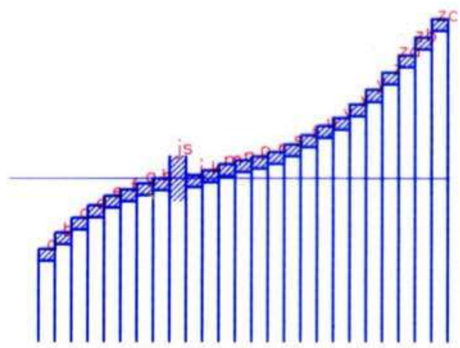

18 GRADES OF TOLERANCES

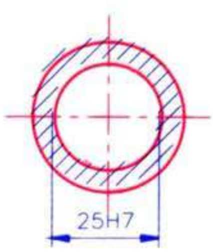

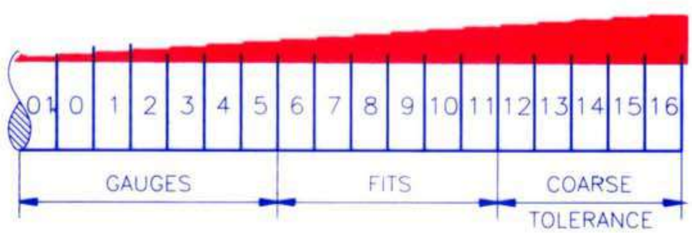

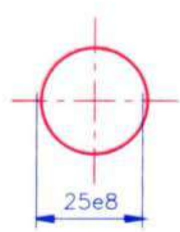

- WHAT DOES 25H7 INDICATE?

- WHAT DOES 25e8 INDICATE?

FUNDAMENTALS OF LIMITS AND FITS

TR 01 06 01 01 93

CIMI CENTRAL INSTRUCTIONAL MEDIA INSTITUTE, MADRAS
AN INDO-GERMAN PROJECT

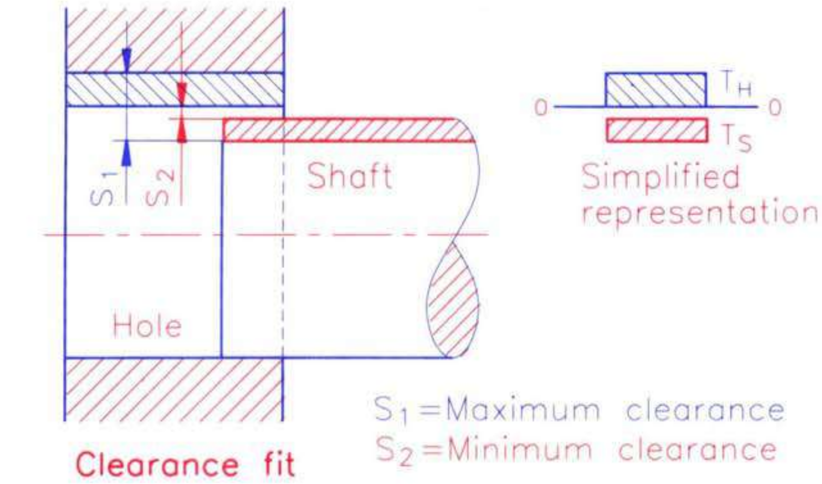

Clearance fit

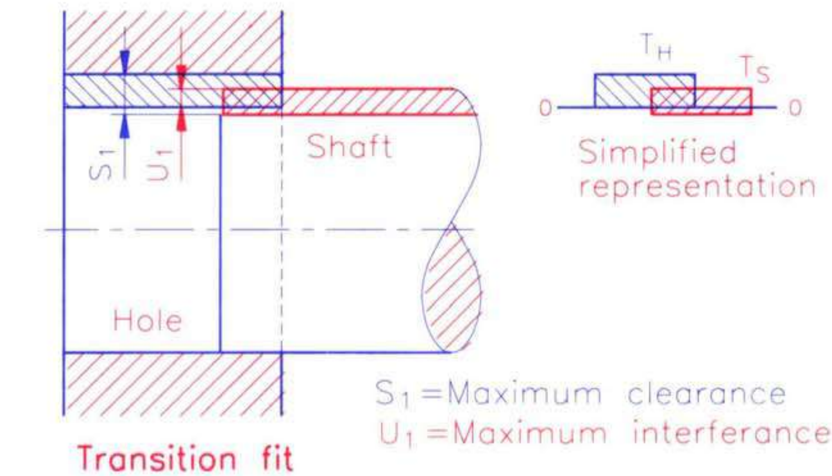

Transition fit

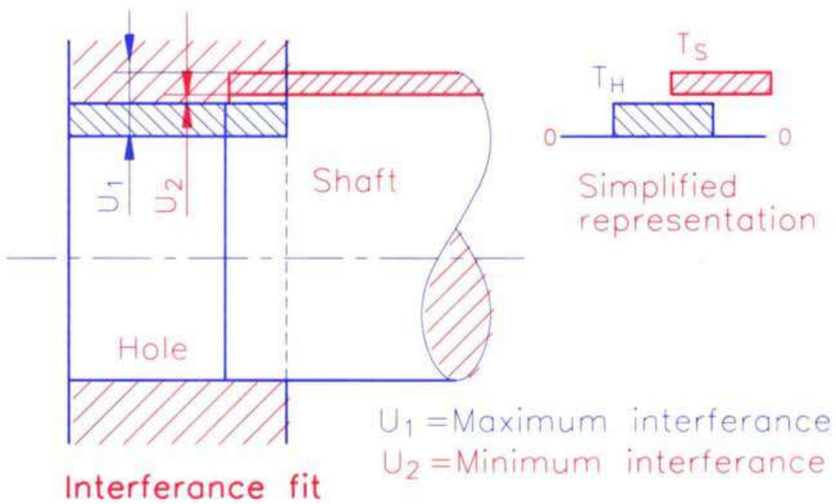

Interferance fit

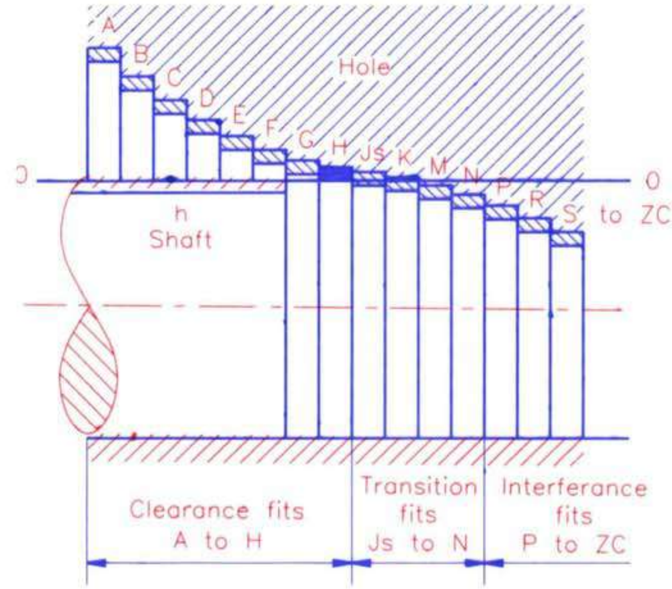

BASIC SHAFT SYSTEM

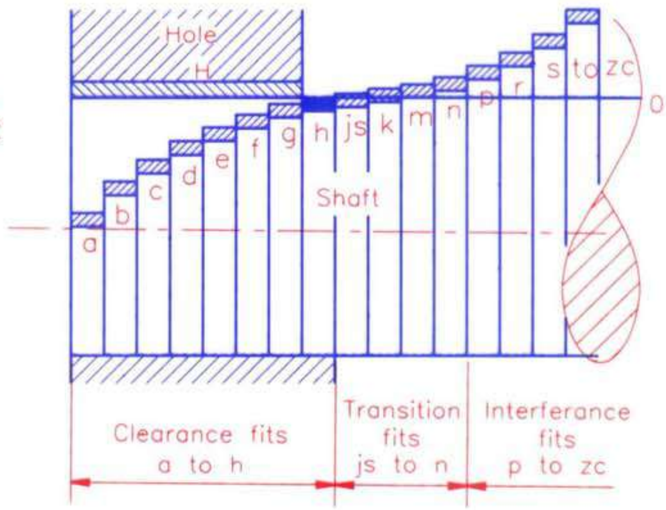

BASIC HOLE SYSTEM

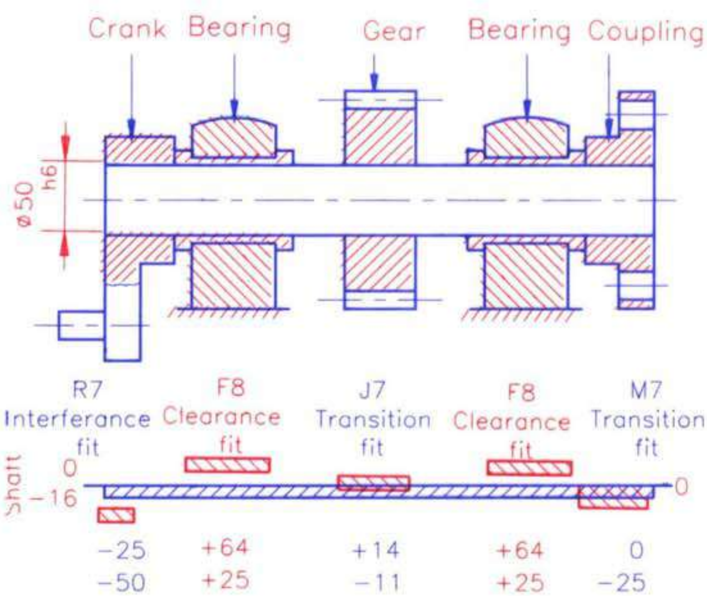

APPLICATION FOR THE BASIC SHAFT SYSTEM

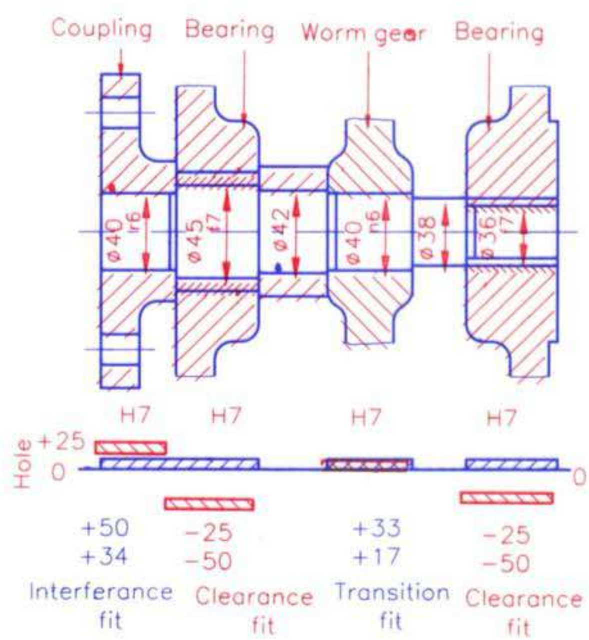

APPLICATION FOR THE BASIC HOLE SYSTEM

SHAFT BASIS AND HOLE BASIS SYSTEM OF LIMITS AND FITS

TR 01 06 01 03 93

CIMI CENTRAL INSTRUCTIONAL MEDIA INSTITUTE, MADRAS
AN INDO-GERMAN PROJECT

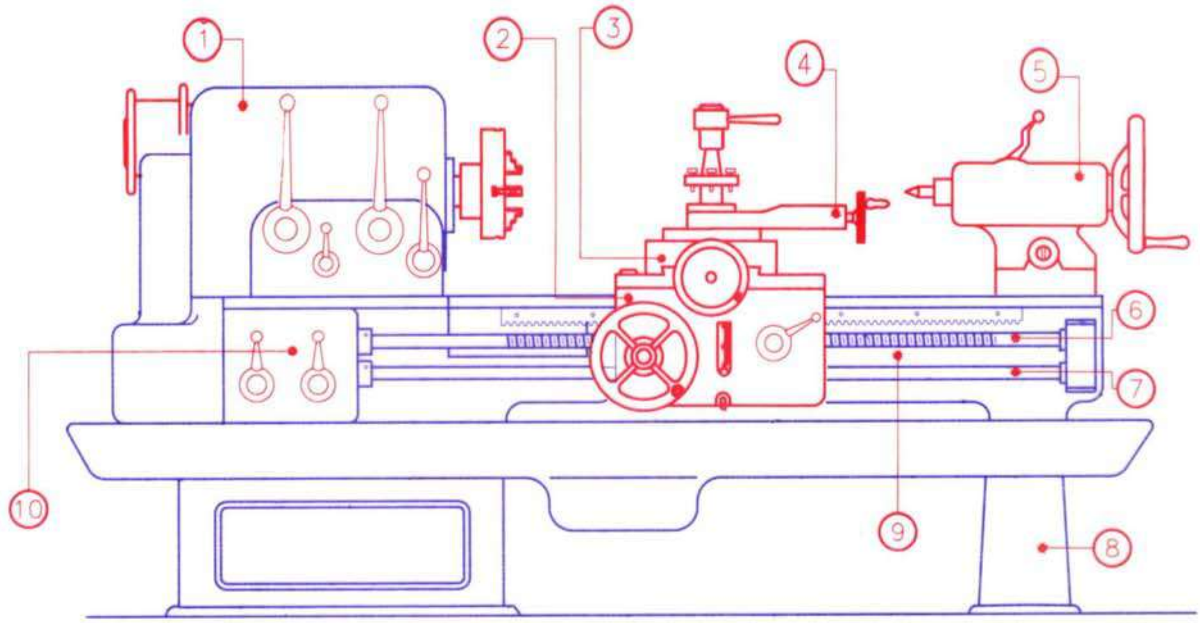

CENTRE LATHE

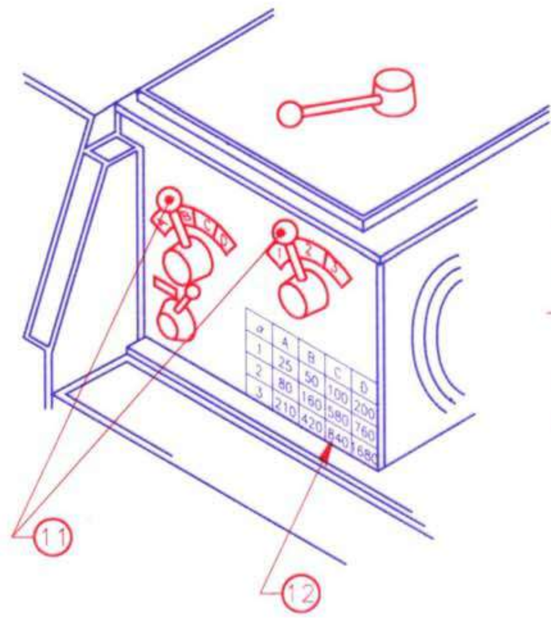

HEAD STOCK

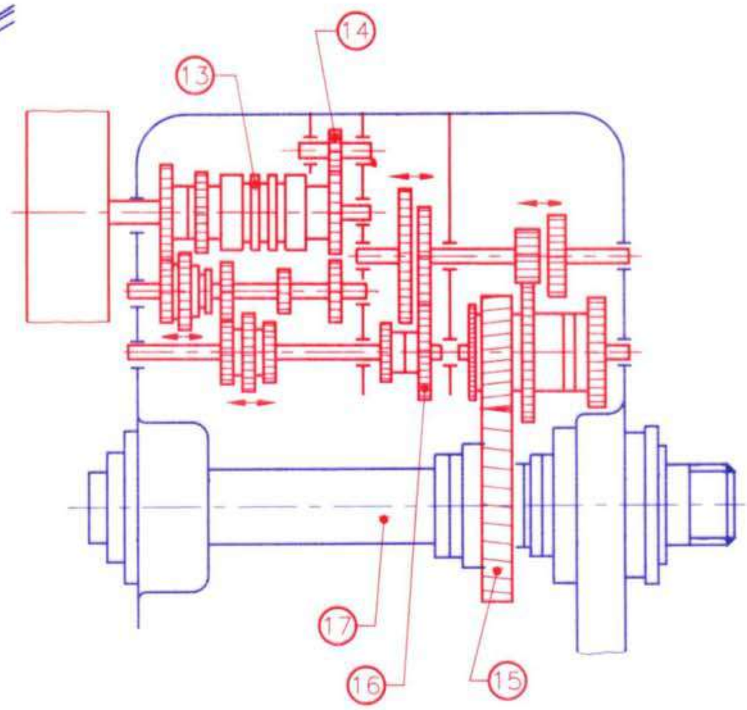

INNER MECHANISM

CENTRE LATHE AND ITS PARTS	TR 01 12 01 01 93	CIMI CENTRAL INSTRUCTIONAL MEDIA INSTITUTE, MADRAS AN INDO-GERMAN PROJECT

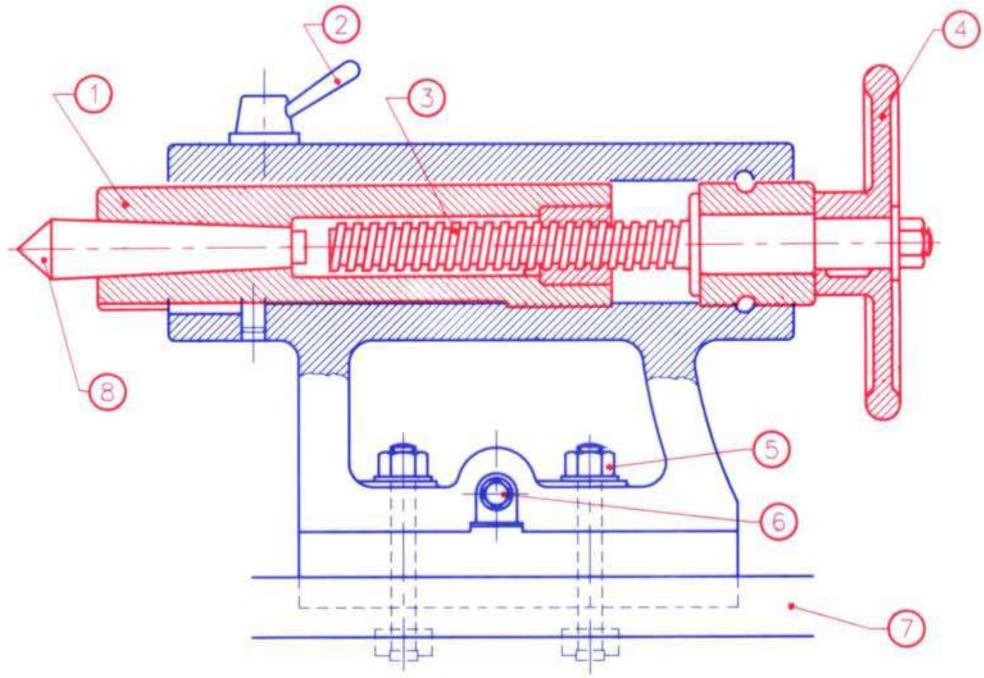

TAILSTOCK

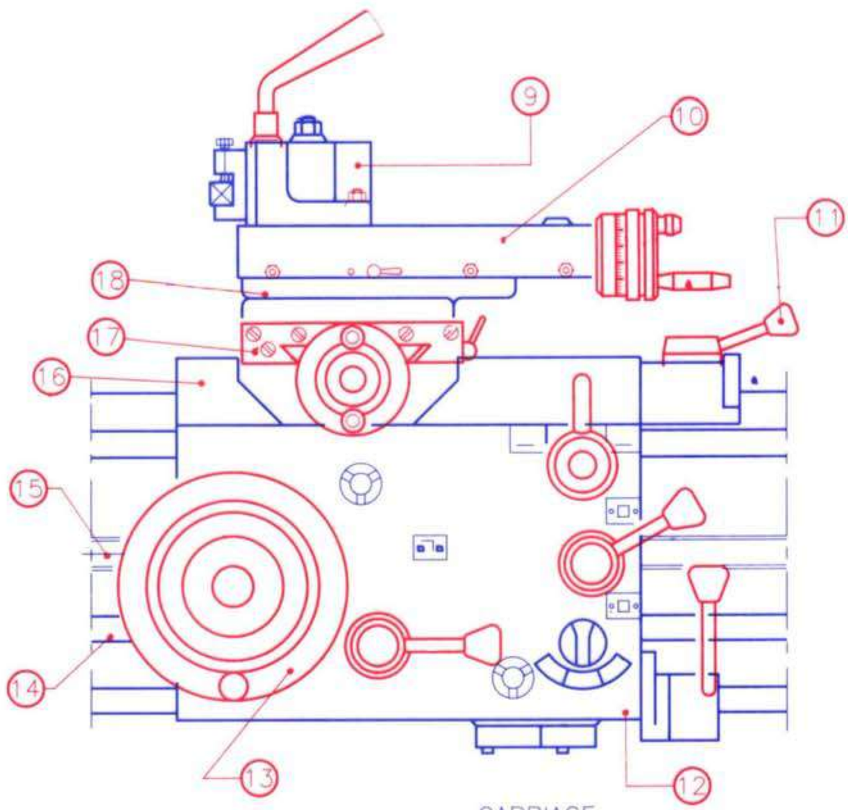

CARRIAGE

LATHE PARTS

TR 01 12 01 02 93

CIMI CENTRAL INSTRUCTIONAL MEDIA INSTITUTE, MADRAS
AN INDO-GERMAN PROJECT

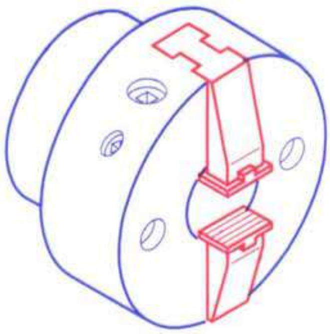

TWO JAW CHUCK

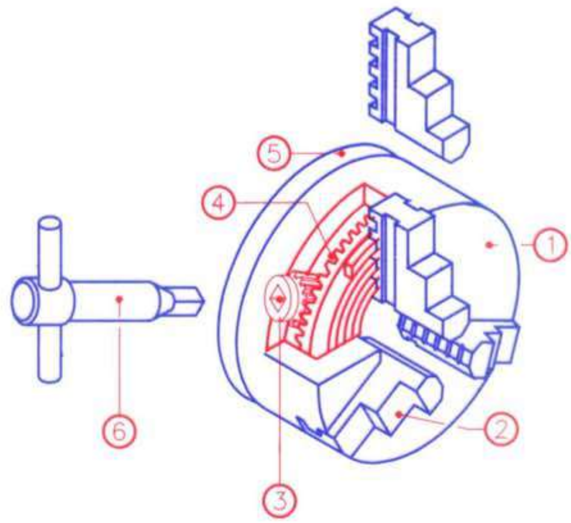

THREE JAW CHUCK

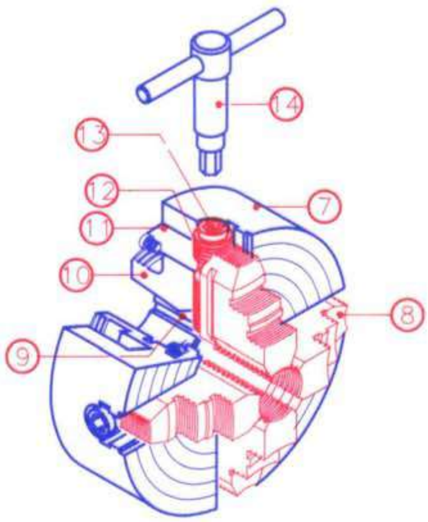

FOUR JAW CHUCK

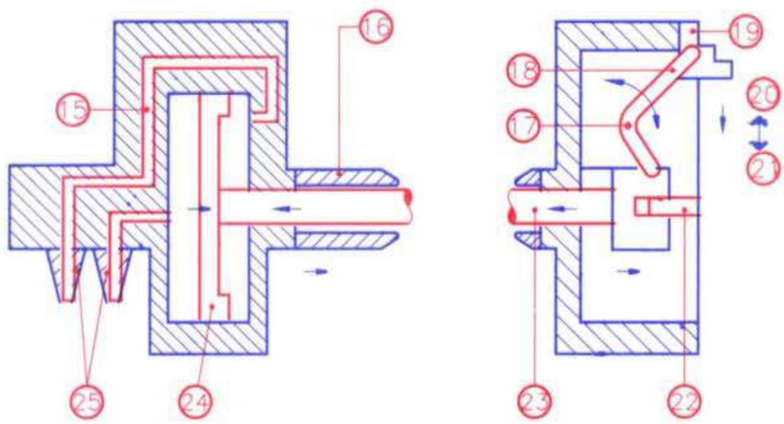

HYDRAULIC CHUCK

LATHE CHUCKS	TR01 13010193	CIMI CENTRAL INSTRUCTIONAL MEDIA INSTITUTE, MADRAS AN INDO-GERMAN PROJECT

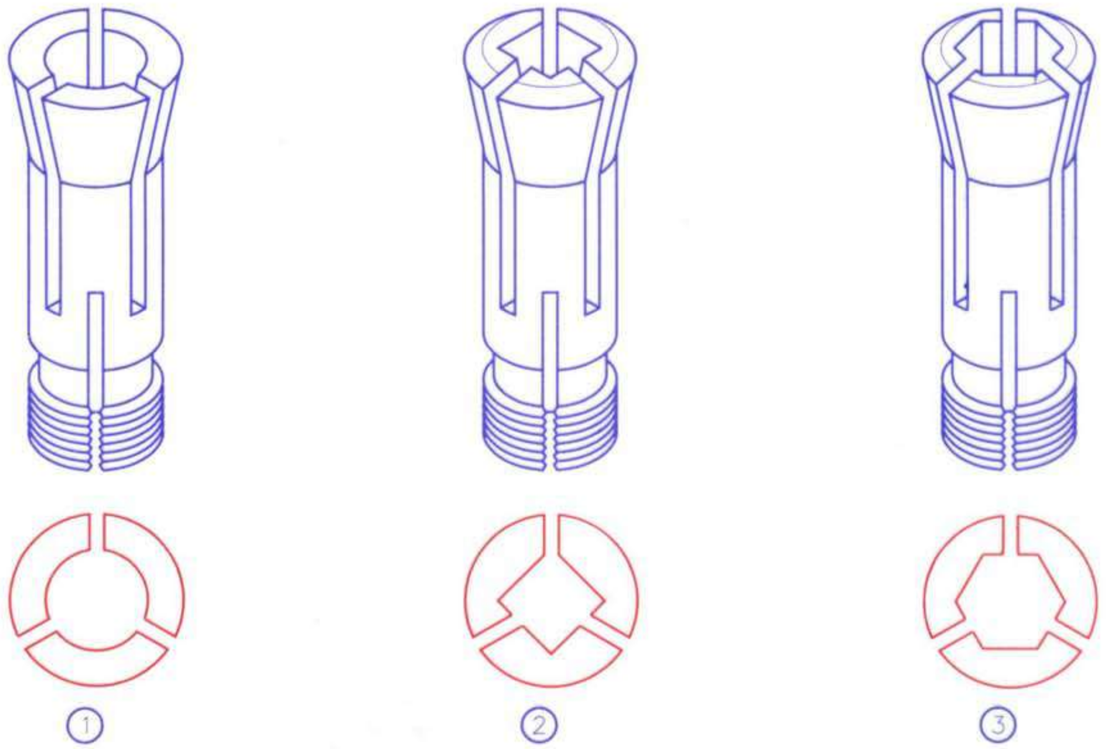

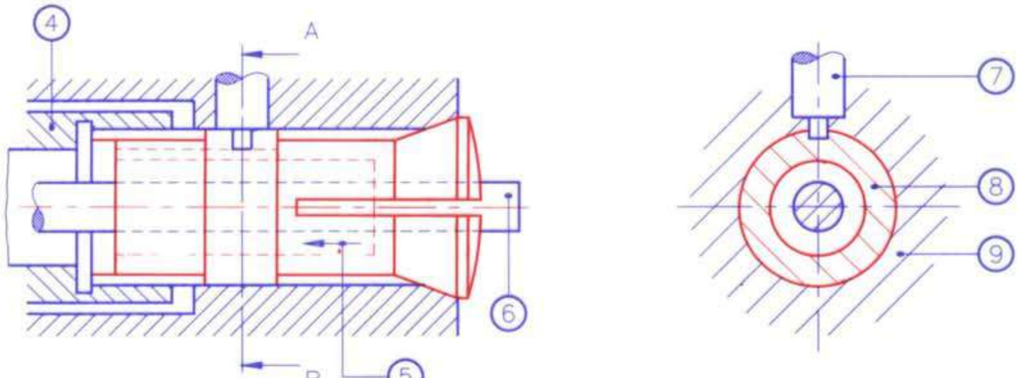

COLLET CHUCKS

TR 01 13 01 02 93

CIMI CENTRAL INSTRUCTIONAL MEDIA INSTITUTE, MADRAS
AN INDO-GERMAN PROJECT

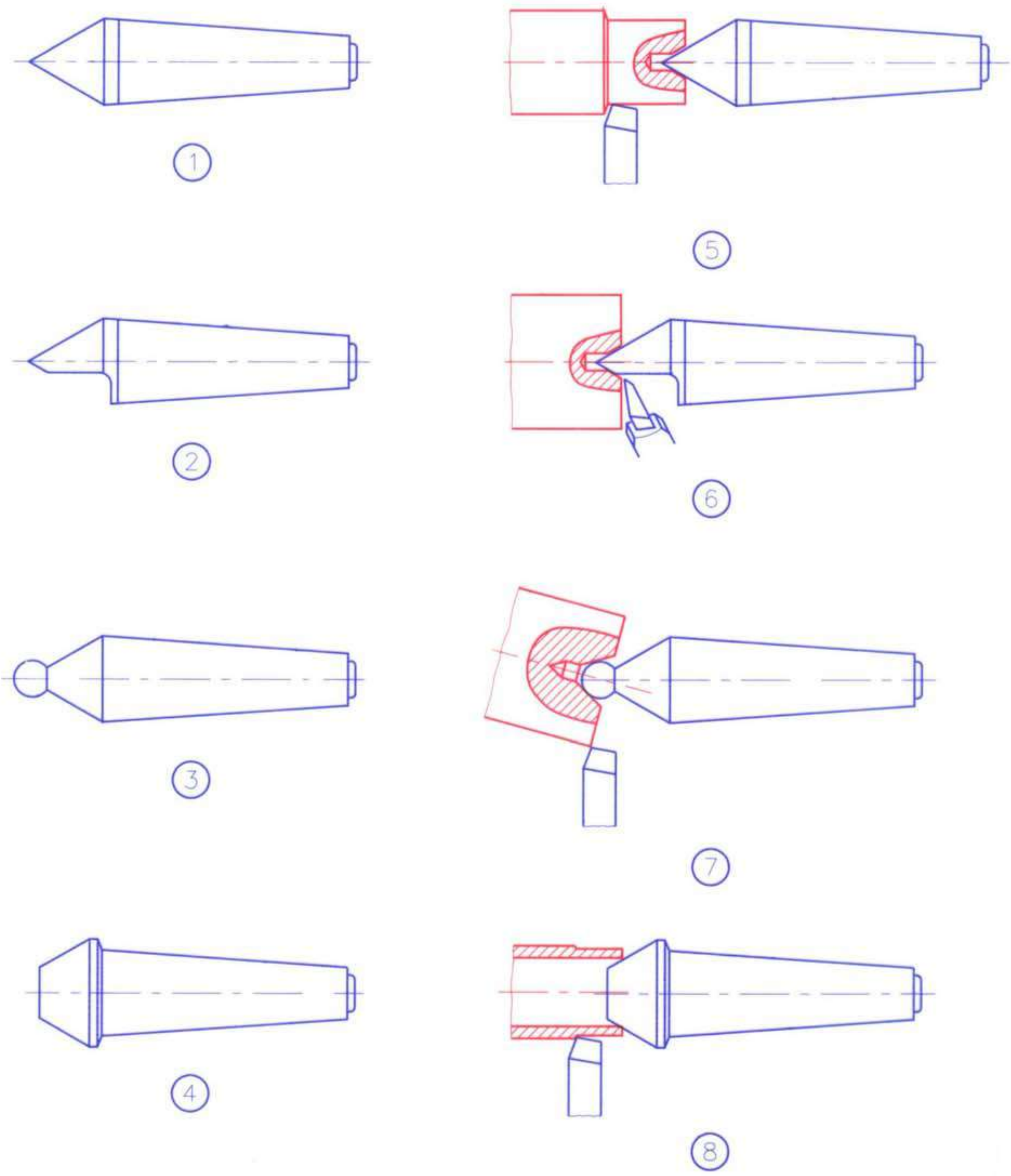

LATHE CENTRES AND THEIR APPLICATION

TR 01 13 02 01 93

CIMI CENTRAL INSTRUCTIONAL MEDIA INSTITUTE, MADRAS
AN INDO-GERMAN PROJECT

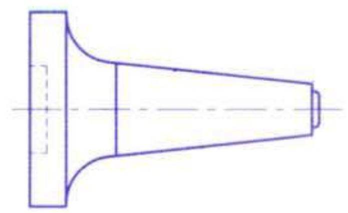

PAD CENTRE

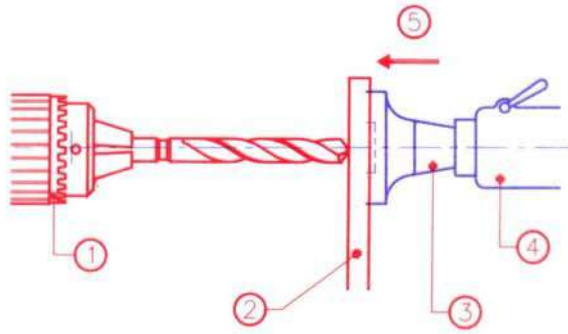

APPLICATION OF PAD CENTRE

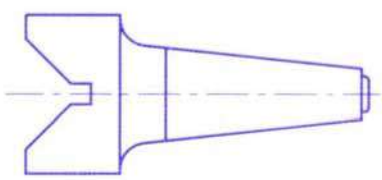

CROACH OR SWIVEL 'V' CENTRE

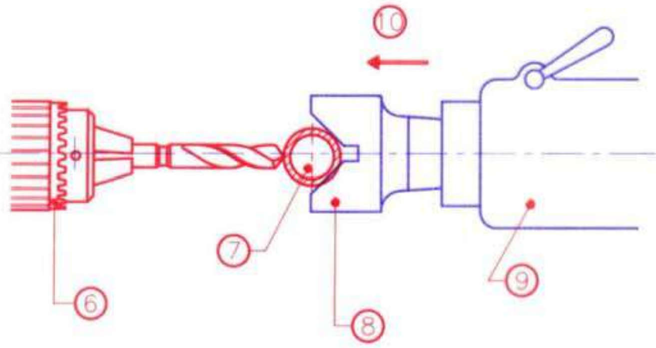

APPLICATION OF CROACH CENTRE

FEMALE CENTRE

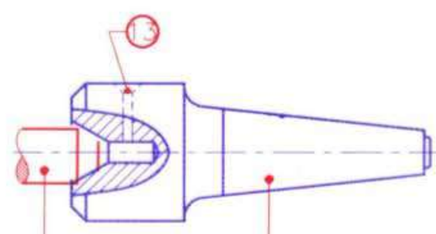

APPLICATION OF FEMALE CENTRE

LATHE CENTRES AND THEIR APPLICATION

TR 01 13 02 02 93

CIMI CENTRAL INSTRUCTIONAL MEDIA INSTITUTE, MADRAS
AN INDO-GERMAN PROJECT

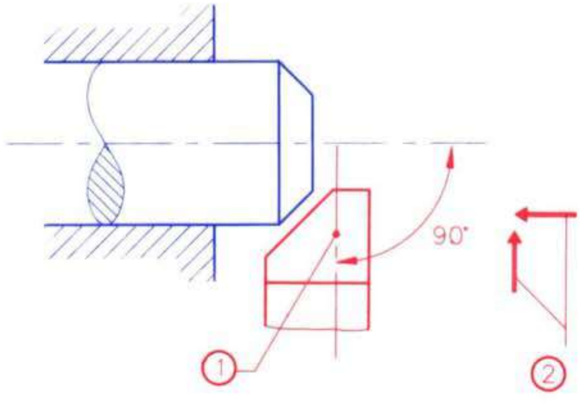

FORM TOOL METHOD

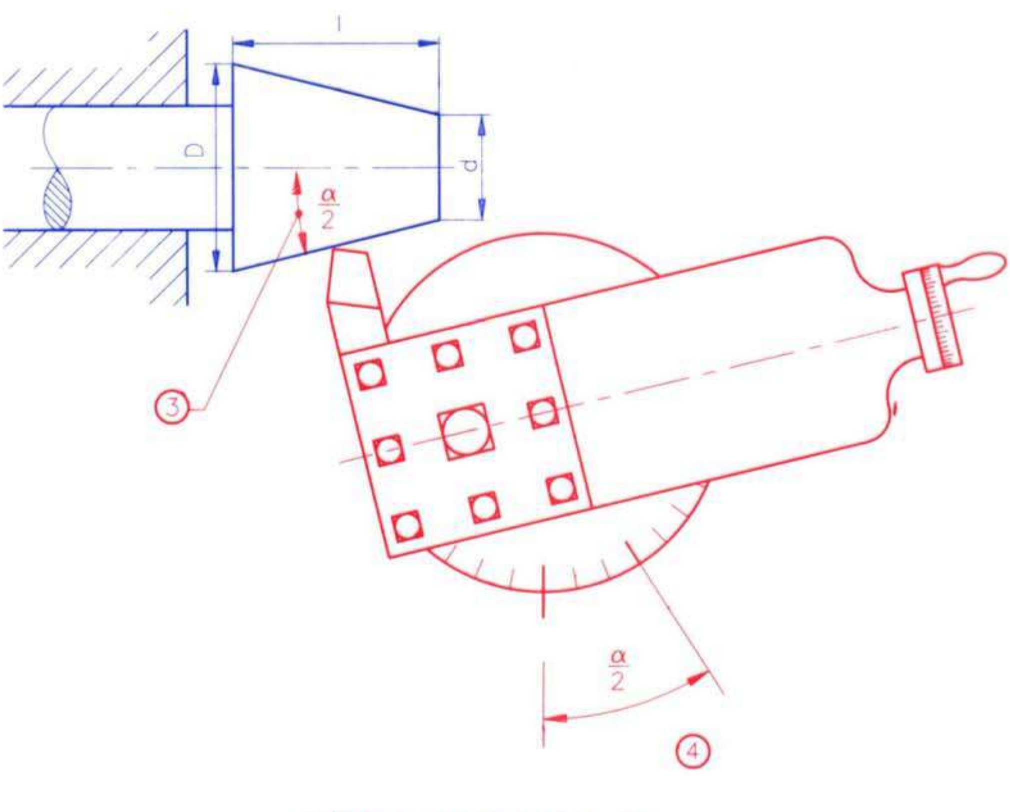

COMPOUND SLIDE METHOD

DIFFERENT METHODS OF TAPER TURNING
(FORM TOOL AND COMPOUND REST)

TR 01 15 03 01 93

CIMI CENTRAL INSTRUCTIONAL MEDIA INSTITUTE, MADRAS
AN INDO-GERMAN PROJECT

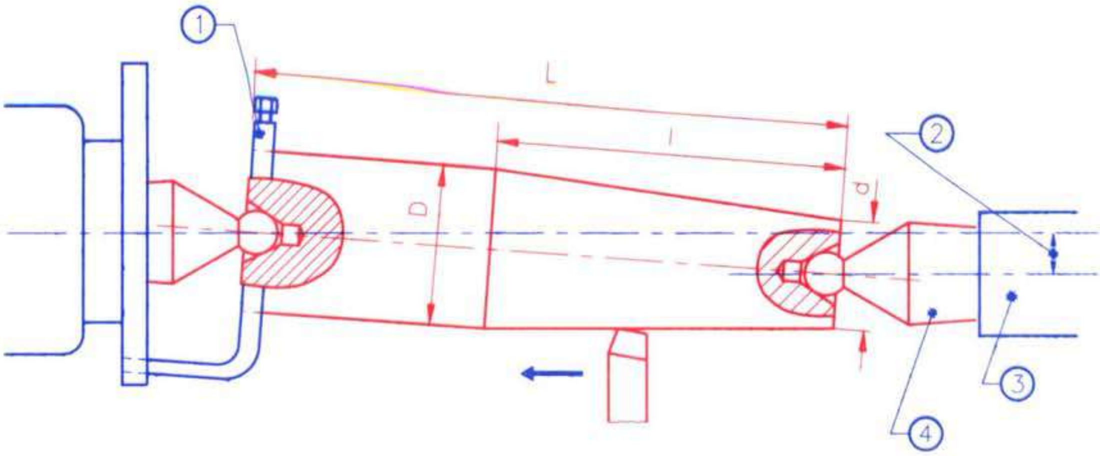

TAILSTOCK OFFSET METHOD

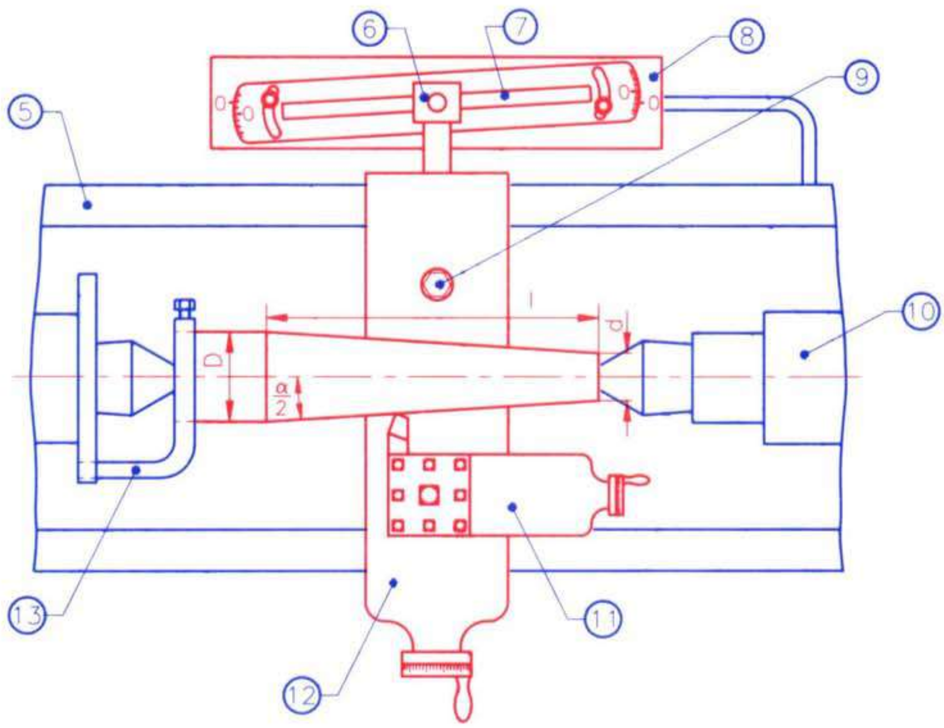

TAPER TURNING ATTACHMENT METHOD

DIFFERENT METHODS OF TAPER TURNING

(TAILSTOCK SET OVER AND TAPER TURNING ATTACHMENT)

TR 01 15 03 02 93

CIMI CENTRAL INSTRUCTIONAL MEDIA INSTITUTE, MADRAS
AN INDO-GERMAN PROJECT

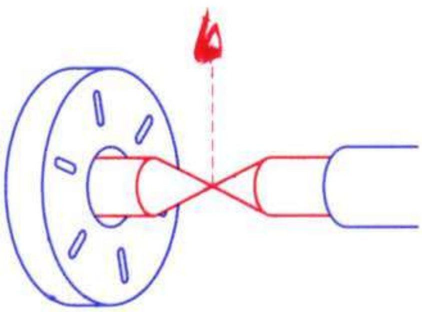

VISUAL ALIGNMENT OF CENTRES

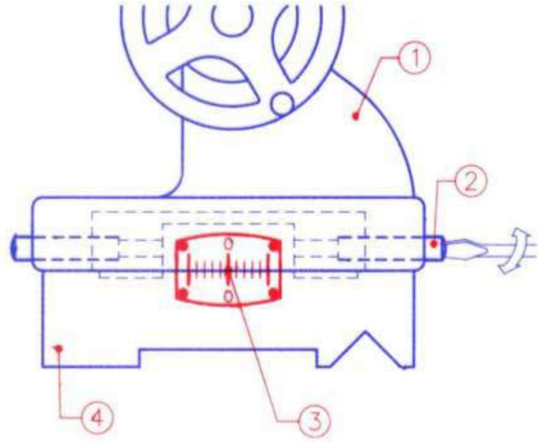

ALIGNMENT OF CENTRES USING GRADUATIONS ON BACK OF TAILSTOCK

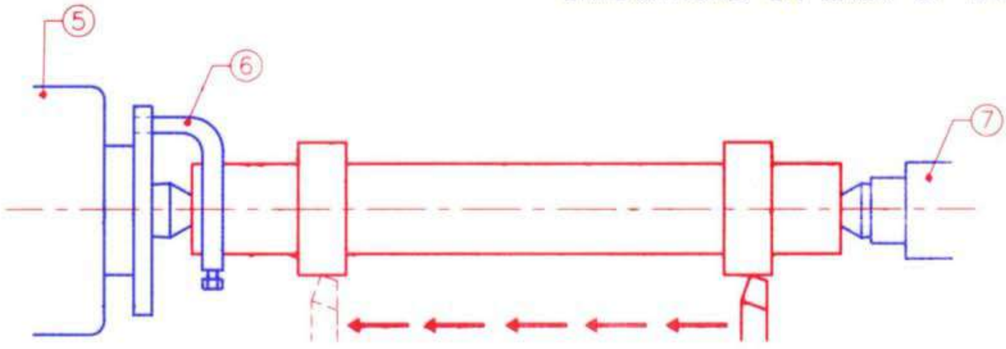

ALIGNMENT OF LATHE CENTRES BY TRAIL CUT METHOD

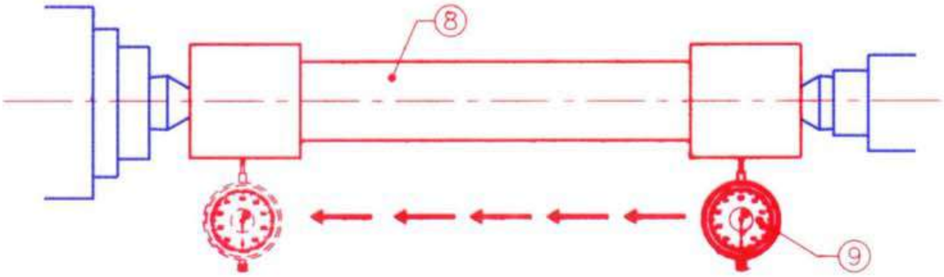

ALIGNING CENTRES WITH A TEST BAR AND DIAL INDICATOR

ALIGNMENT OF LATHE CENTRES

TR 01 15 03 03 93

CIMI CENTRAL INSTRUCTIONAL MEDIA INSTITUTE, MADRAS
AN INDO-GERMAN PROJECT

CENTRAL INSTRUCTIONAL MEDIA INSTITUTE, MADRAS
AN INDO GERMAN PROJECT

TR 03 01 11 01 95

TYPES OF OXY-ACETYLENE FLAME

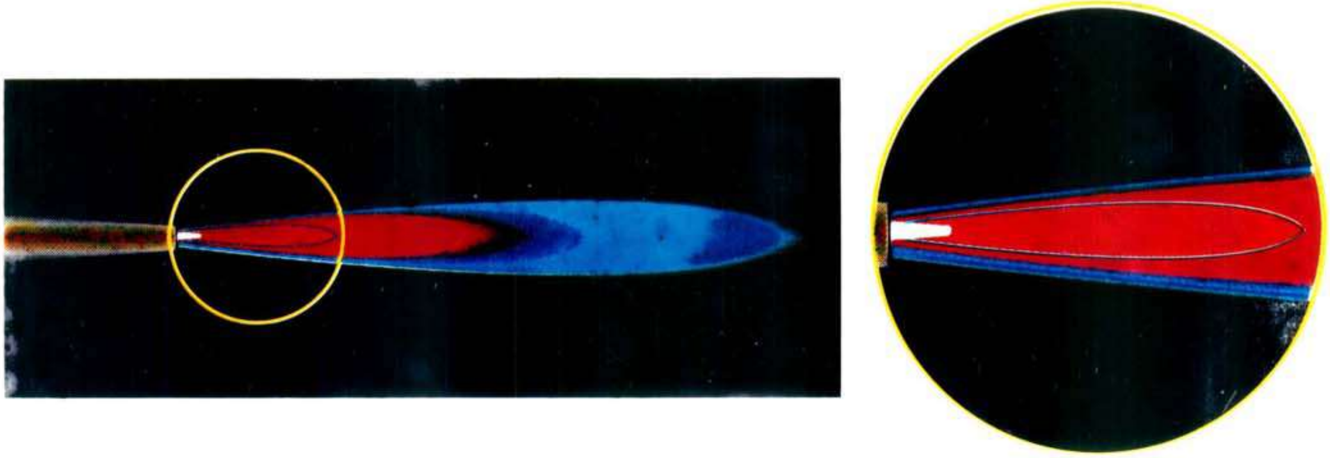

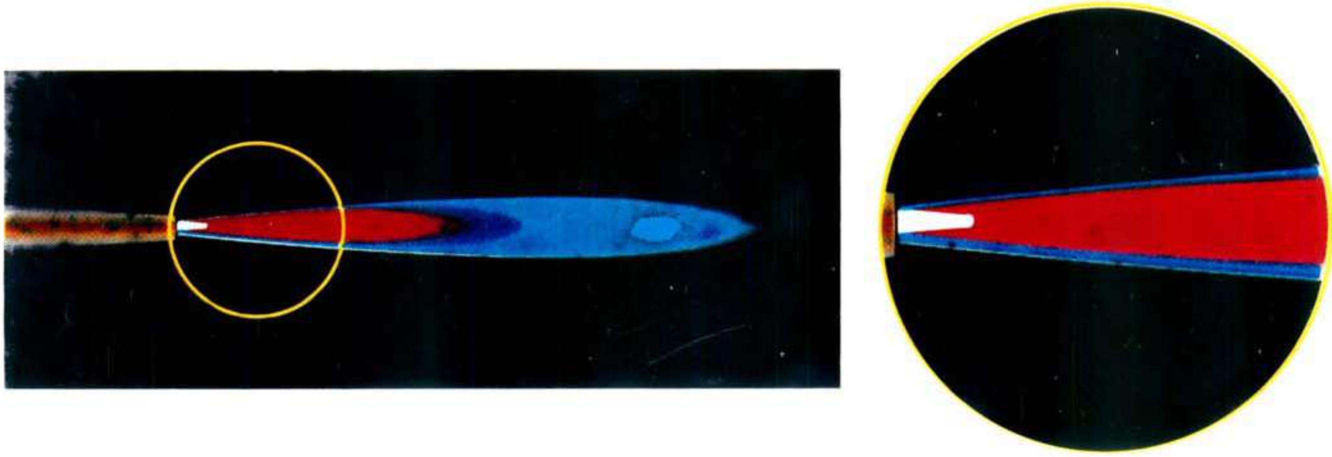

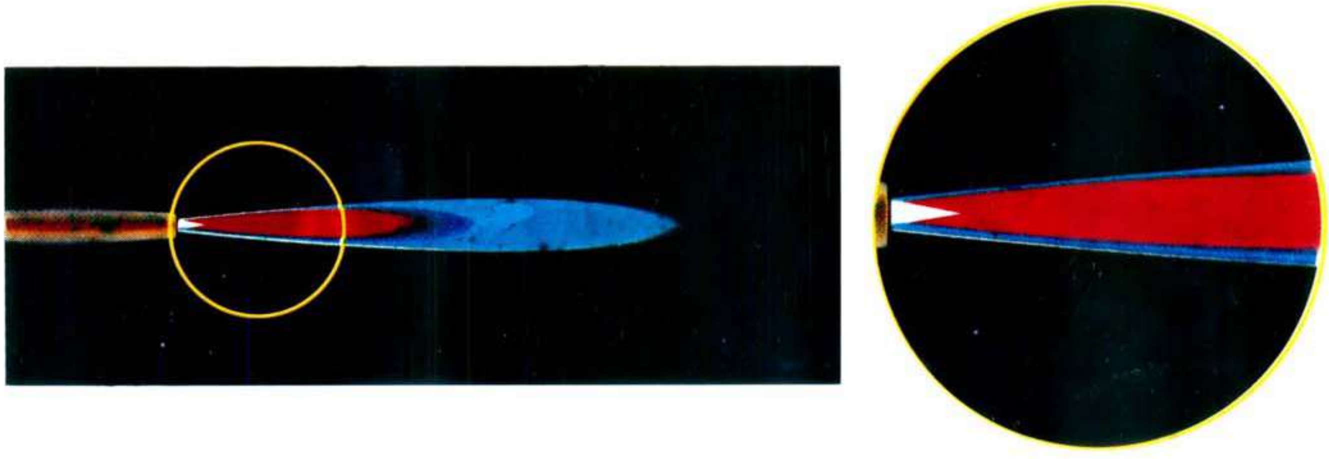

CHEMISTRY OF OXYGEN - ACETYLENE FLAME

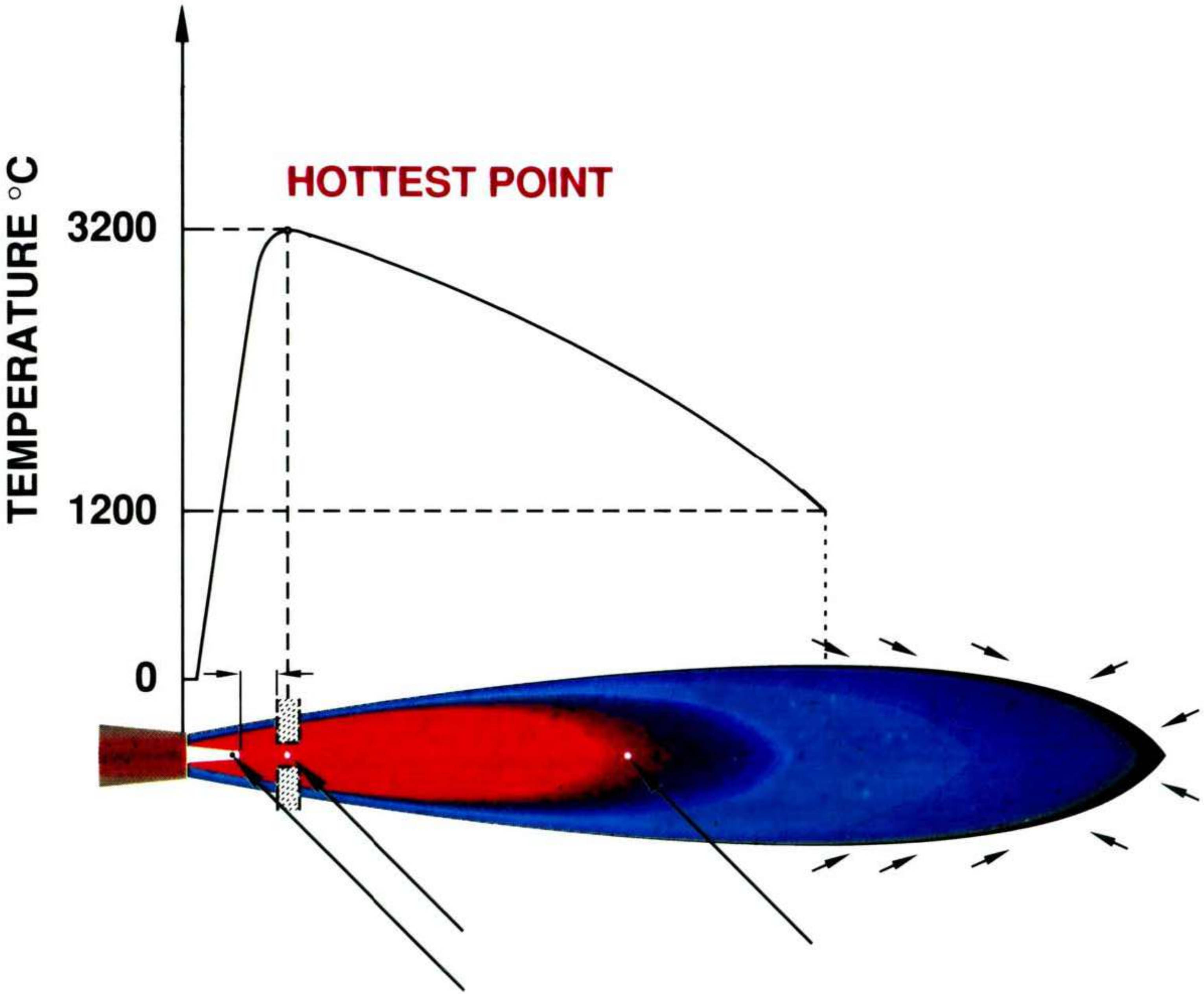

CENTRAL INSTRUCTIONAL MEDIA INSTITUTE, MADRAS
AN INDO GERMAN PROJECT

TR 03 01 11 03 95

INFLUENCE OF DISCHARGE VELOCITY AND AMOUNT OF HEAT

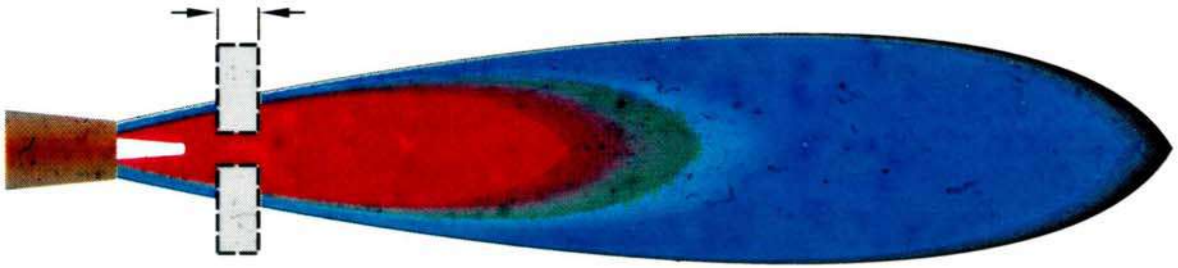

DISCHARGE VELOCITY AND AMOUNT OF HEAT

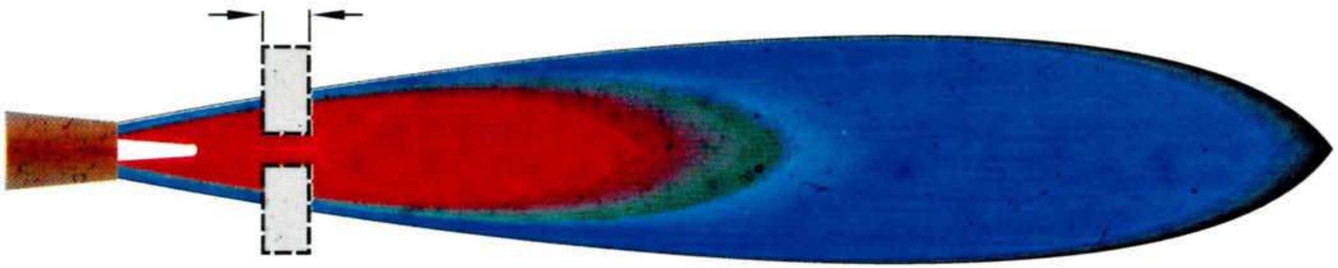

DISCHARGE VELOCITY AND AMOUNT OF HEAT

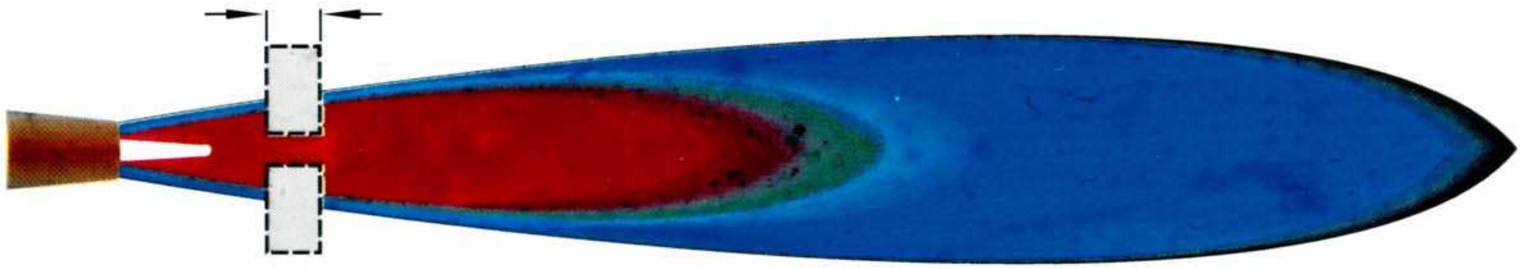

DISCHARGE VELOCITY AND AMOUNT OF HEAT

CIMI CENTRAL INSTRUCTIONAL MEDIA INSTITUTE, MADRAS
AN INDO-GERMAN PROJECT
gtz
TR 03 01 04 01 95

DOUBLE STAGE REGULATOR (FUNCTION)

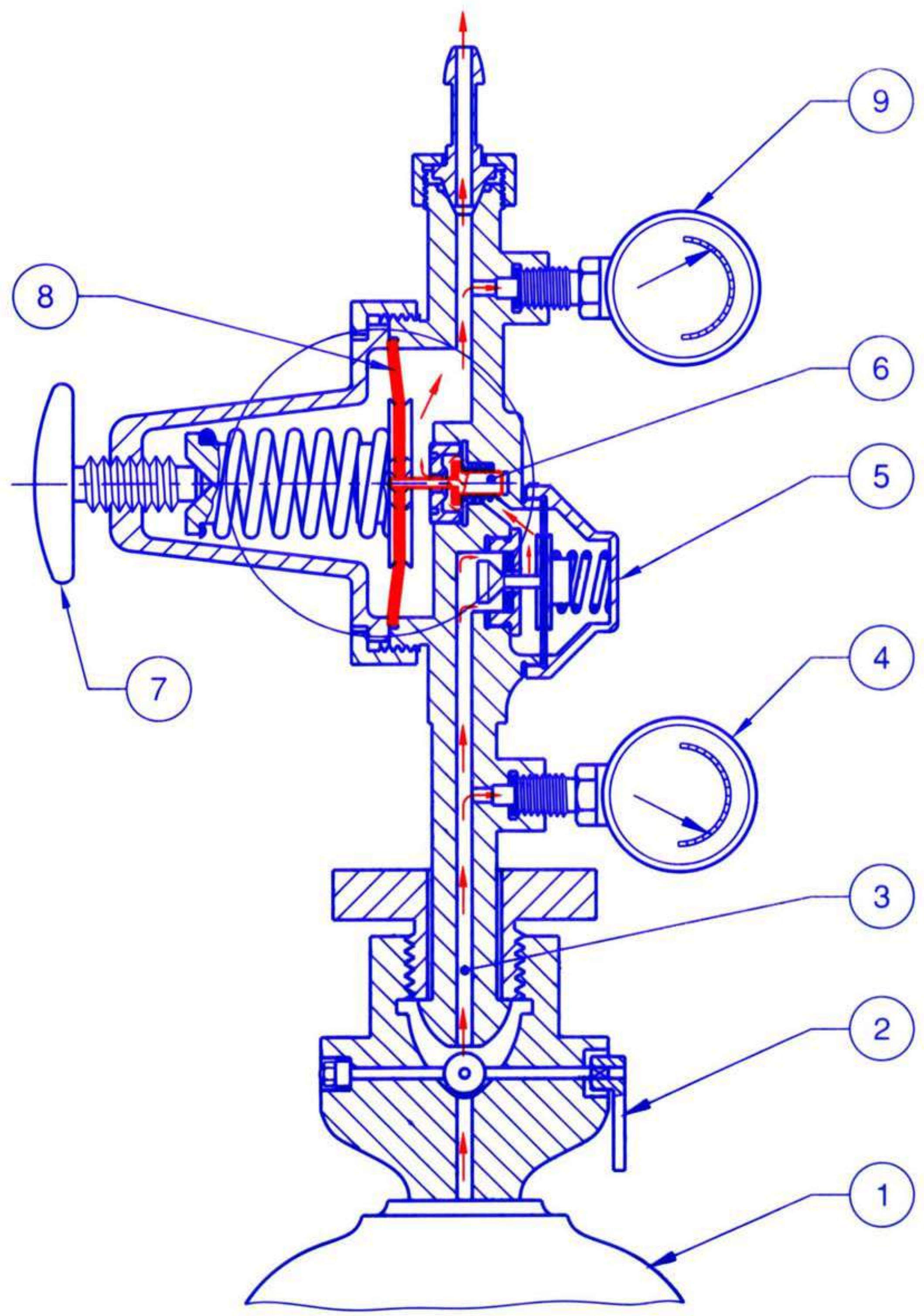

REGULATOR DIAPHRAGM (FUNCTION)

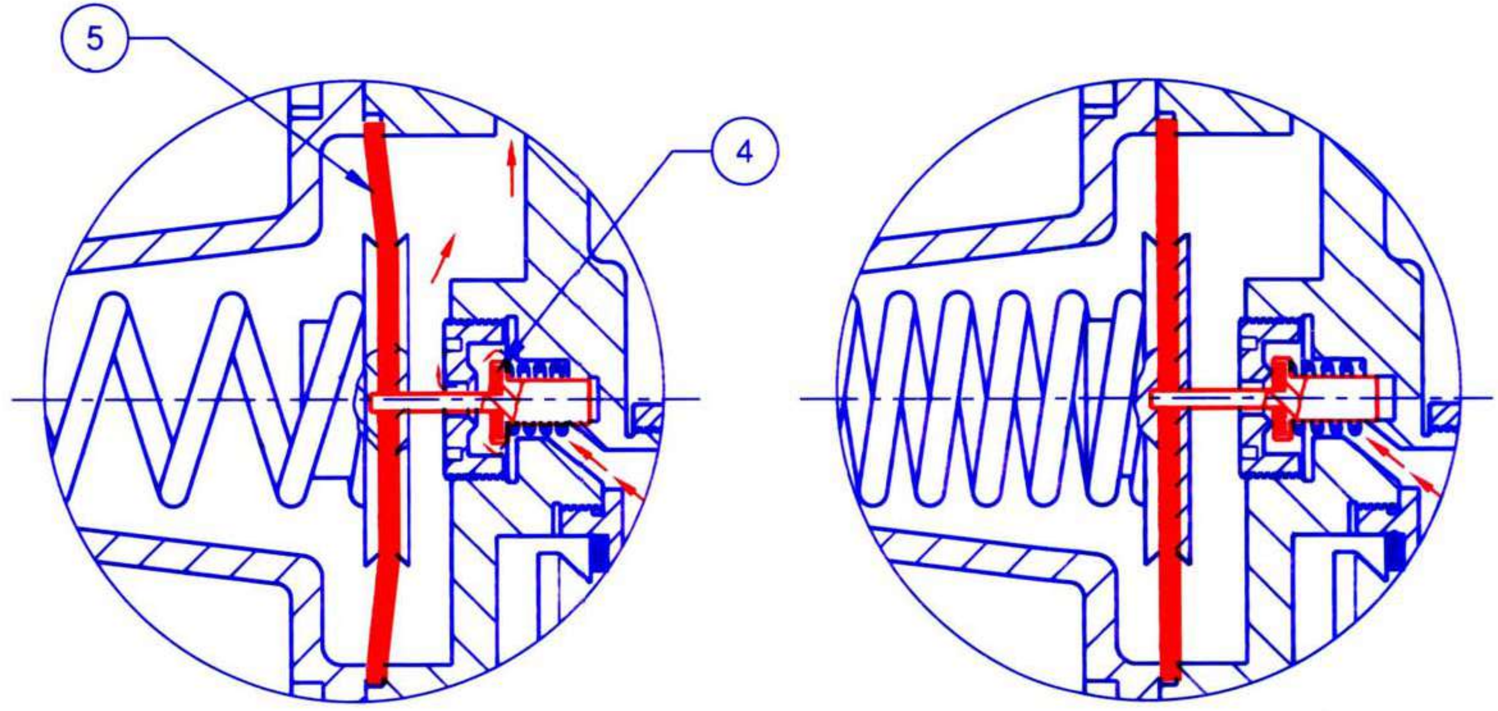

CENTRAL INSTRUCTIONAL MEDIA INSTITUTE, MADRAS
AN INDO-GERMAN PROJECT

TR 03 01 04 02 95

TR 03 01 04 03 95

SINGLE STAGE REGULATOR (FUNCTION)

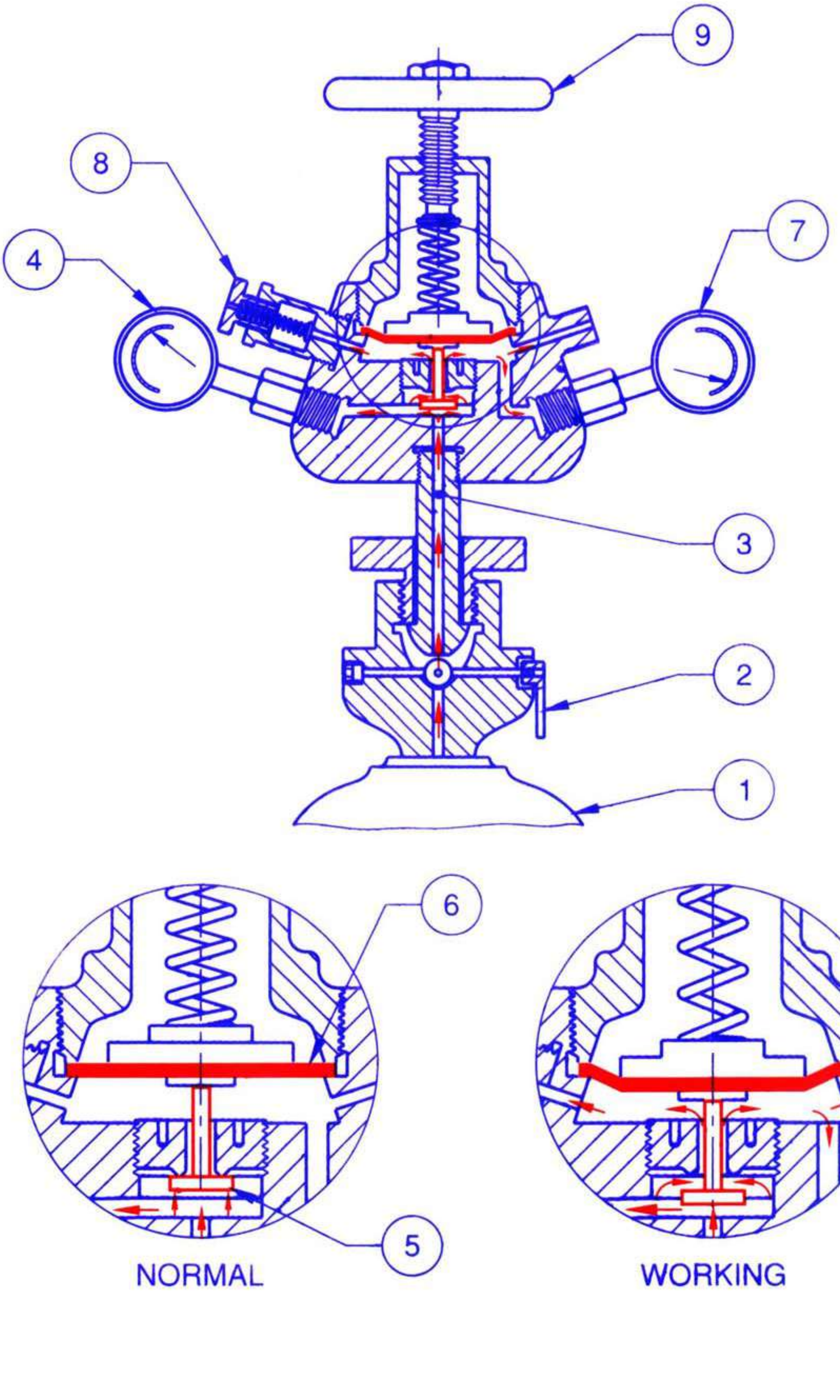

LOW PRESSURE BLOW PIPE (FUNCTION)

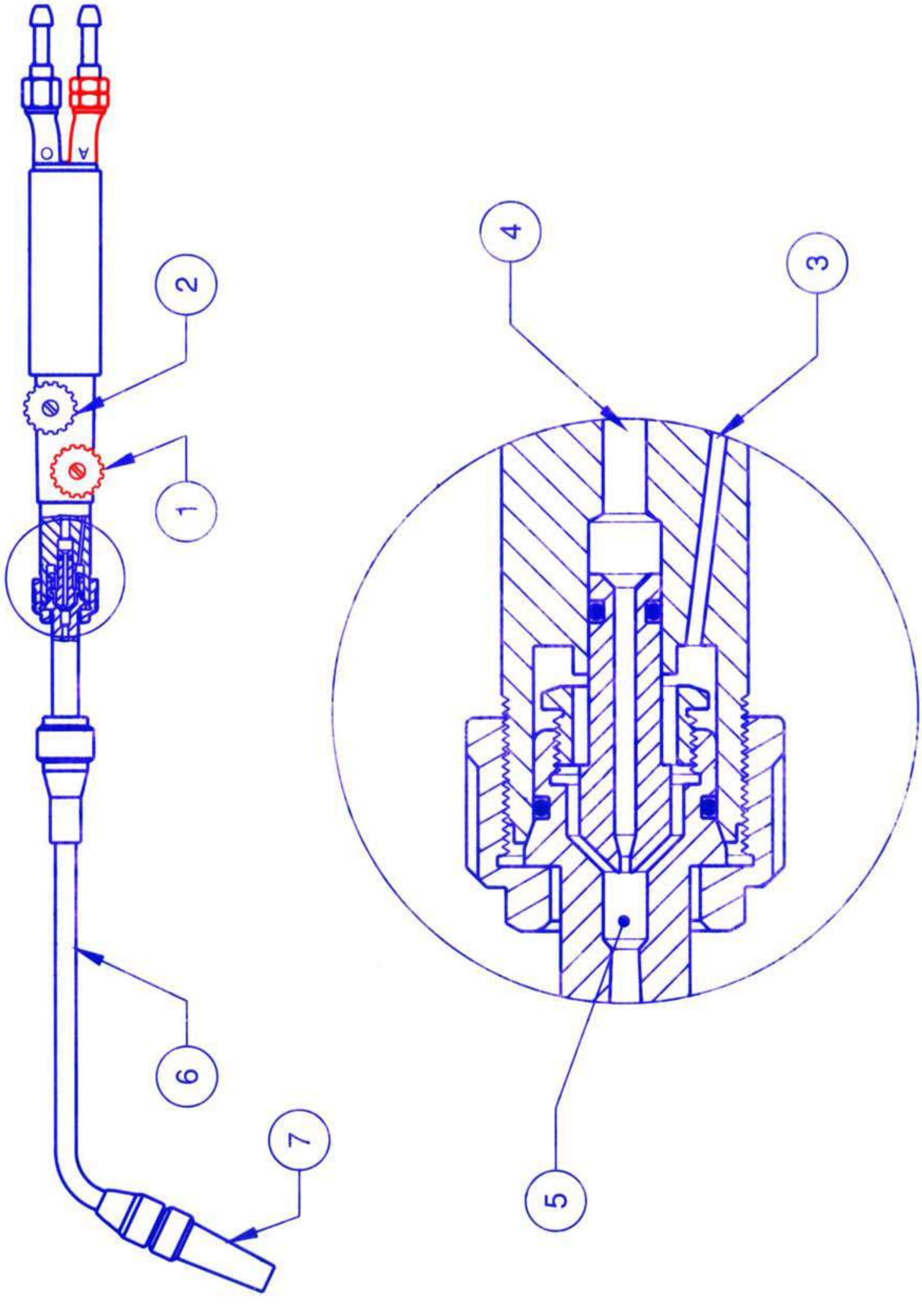

CENTRAL INSTRUCTIONAL MEDIA INSTITUTE, MADRAS
AN INDO-GERMAN PROJECT
TR 03 01 05 02 95

HIGH PRESSURE BLOW PIPE (FUNCTION)

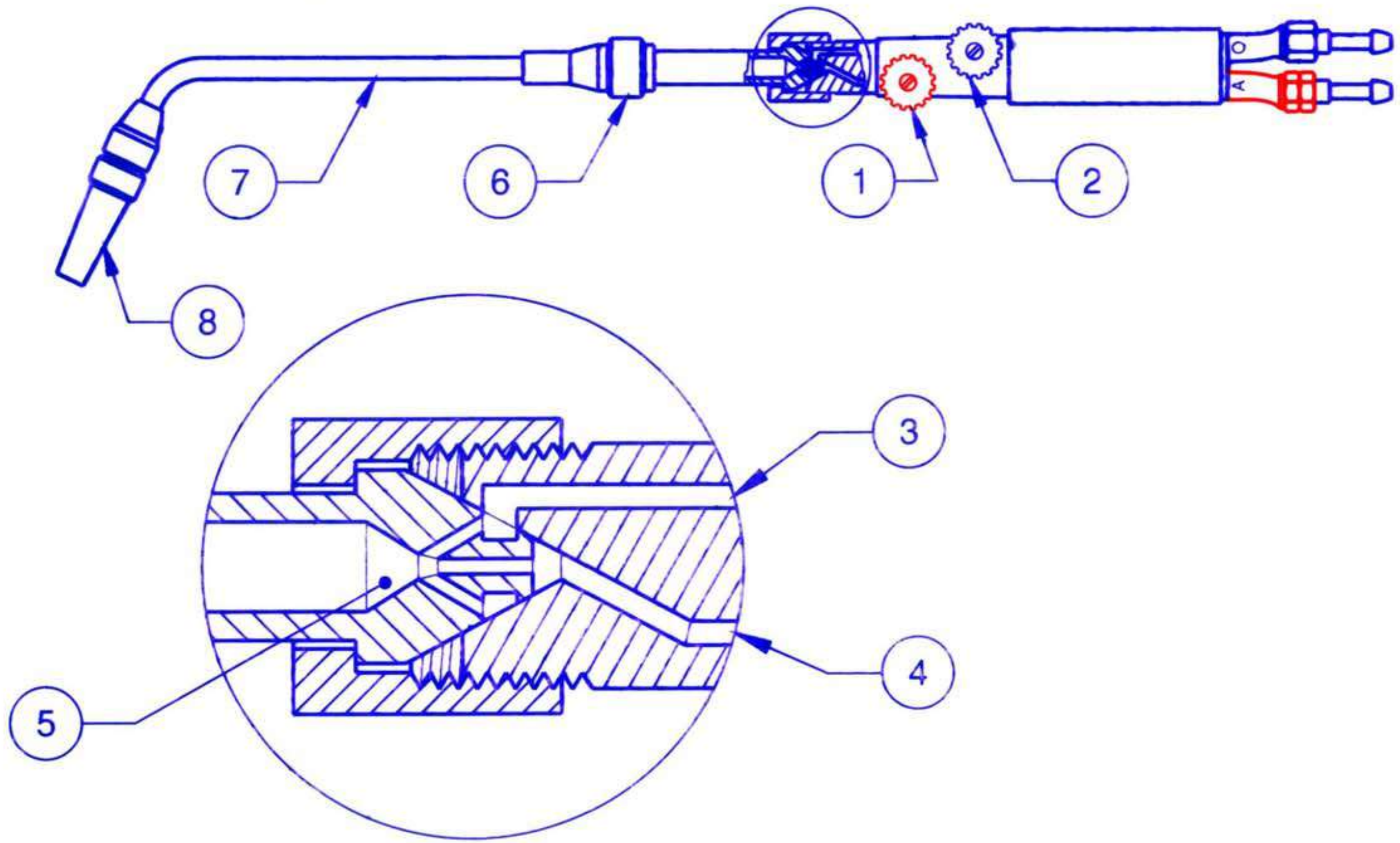

CIMI CENTRAL INSTRUCTIONAL MEDIA INSTITUTE, MADRAS
AN INDO-GERMAN PROJECT

gtz

TR 03 01 06 01 95

WATER TO CARBIDE GENERATOR (FUNCTION)

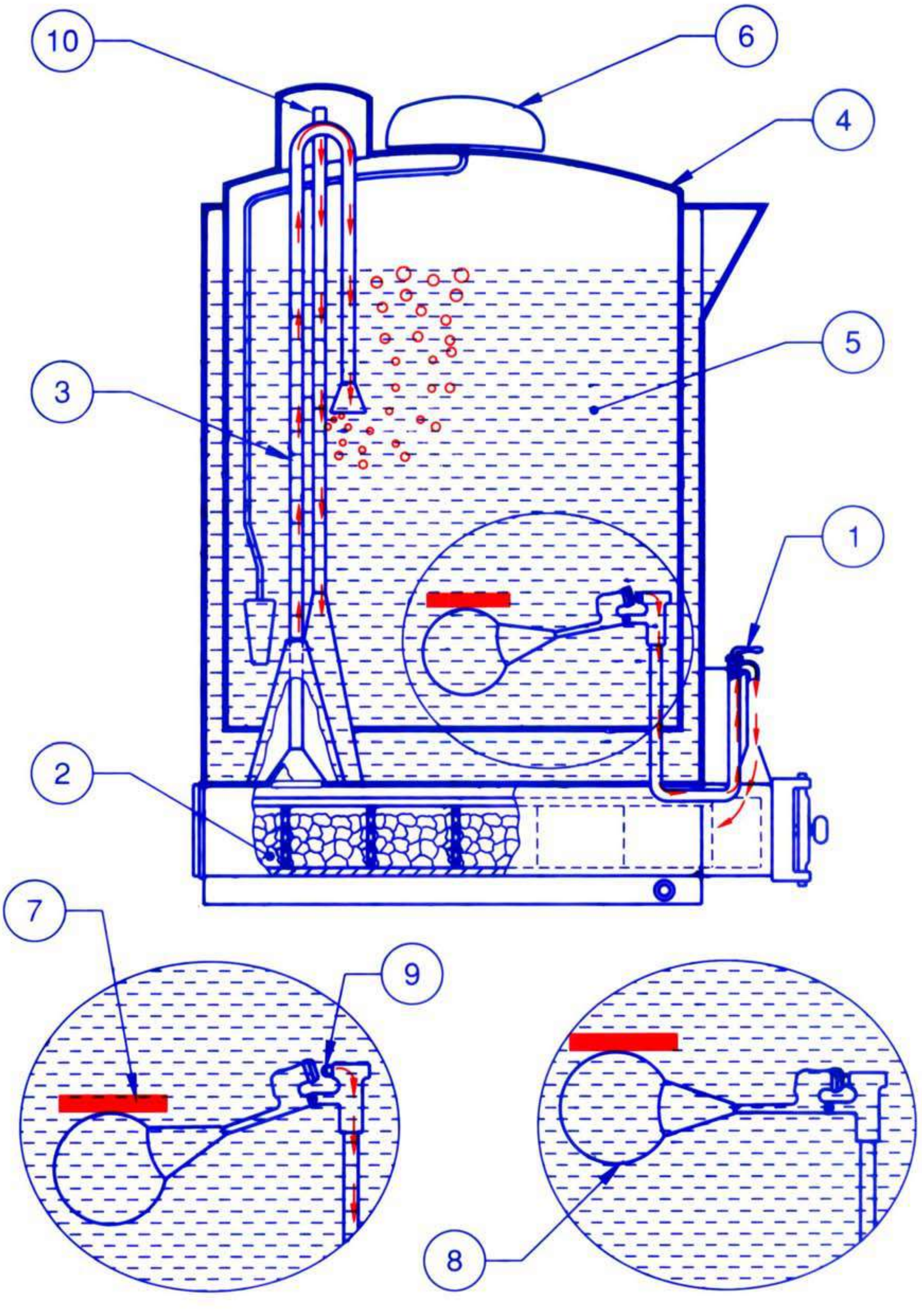

TR 03 01 06 02 95

CARBIDE TO WATER GENERATOR (FUNCTION)

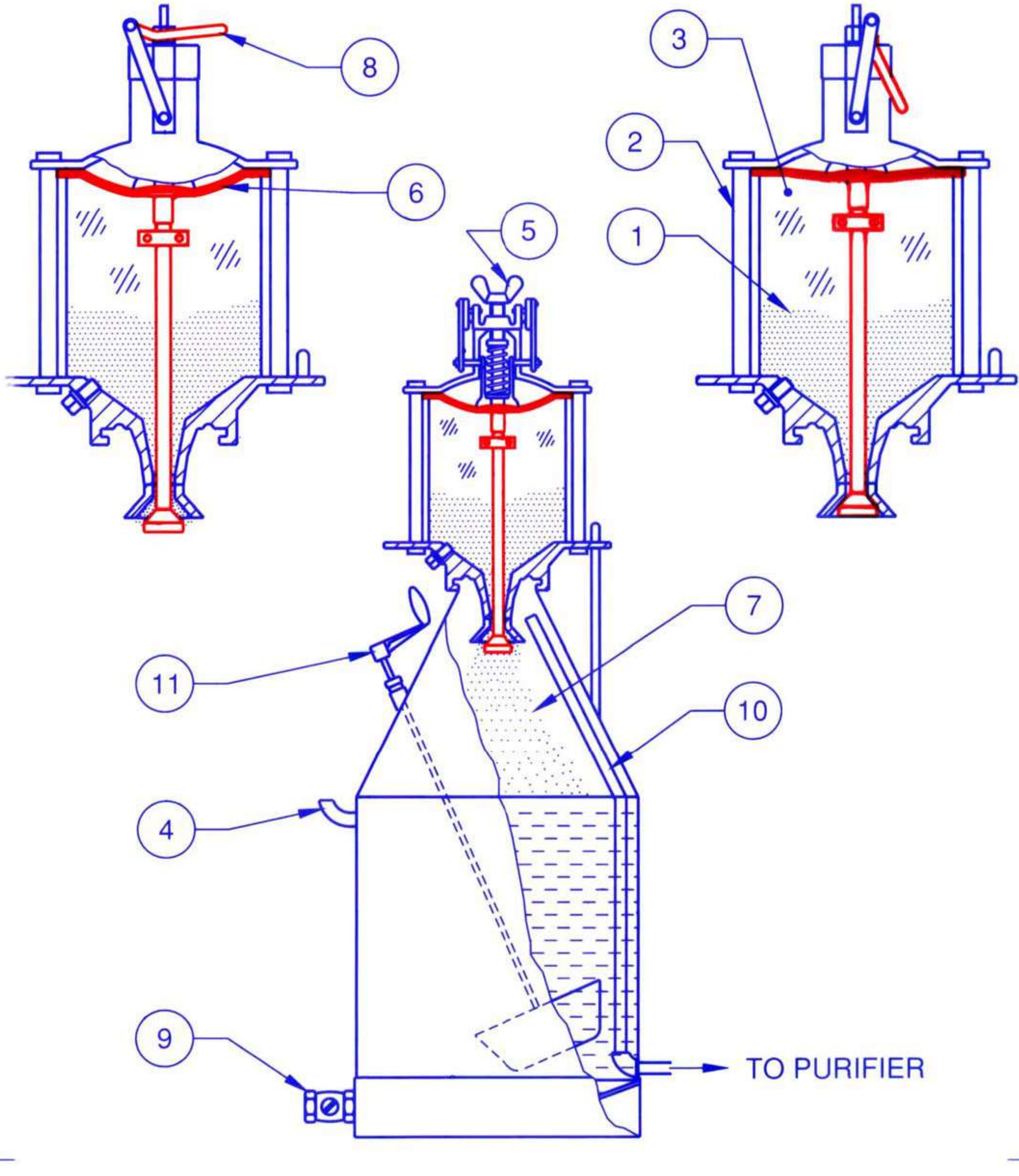

HYDRAULIC BACK PRESSURE VALVE (FUNCTION)

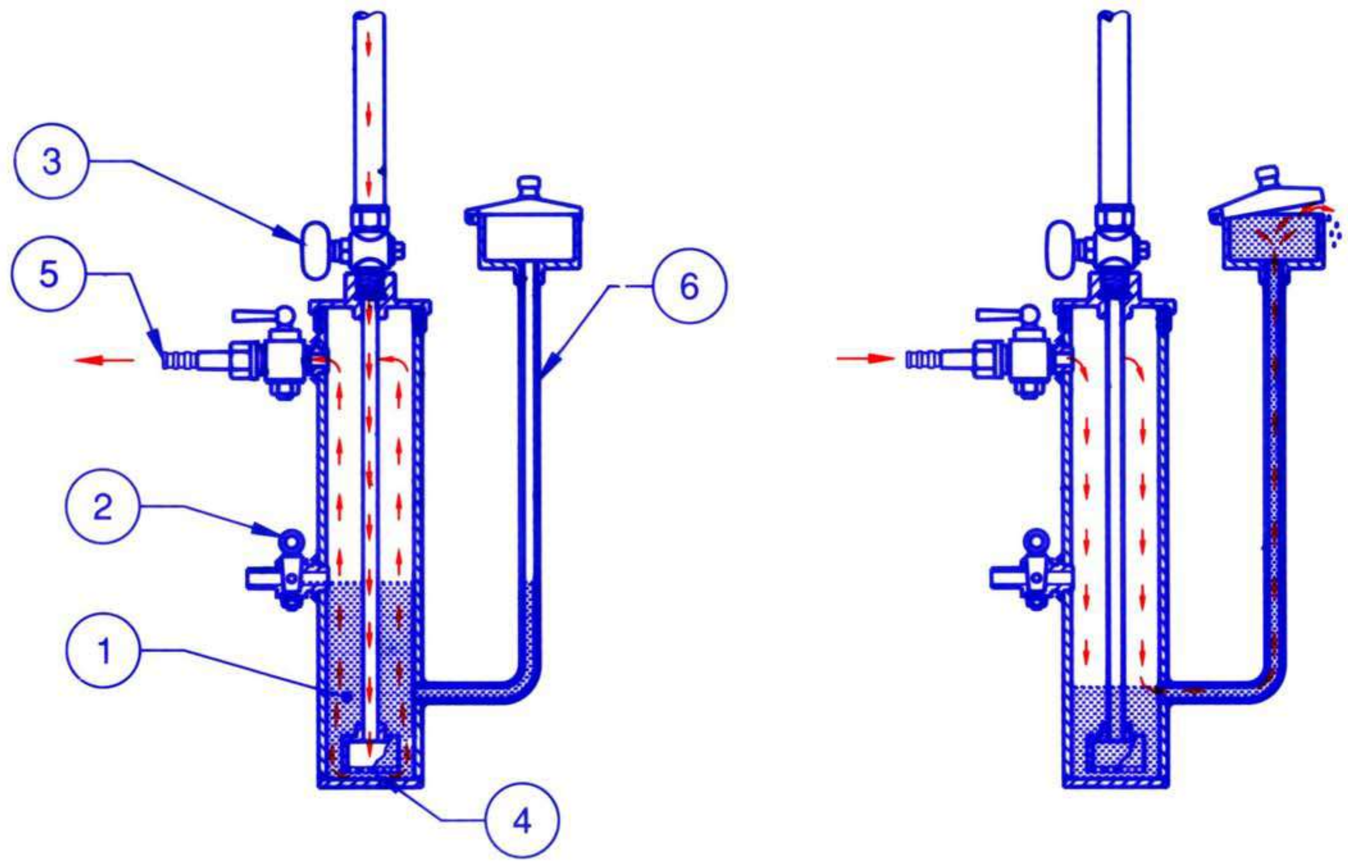

CENTRAL INSTRUCTIONAL MEDIA INSTITUTE, MADRAS
AN INDO-GERMAN PROJECT

TR 03 01 10 01 95

GAS WELDING TECHNIQUES

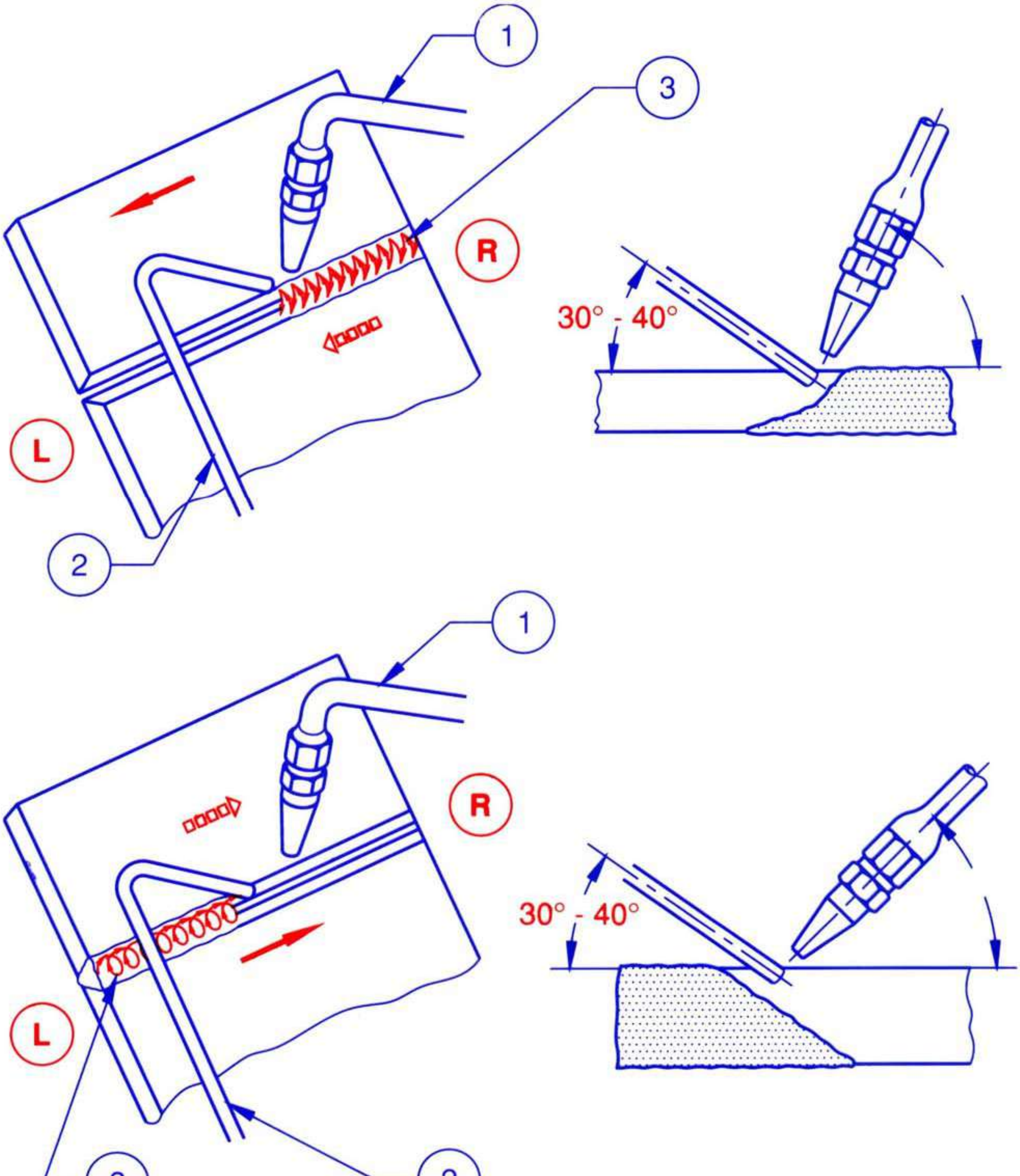

METALLIC ARC

ARC WITH COATED ELECTRODE

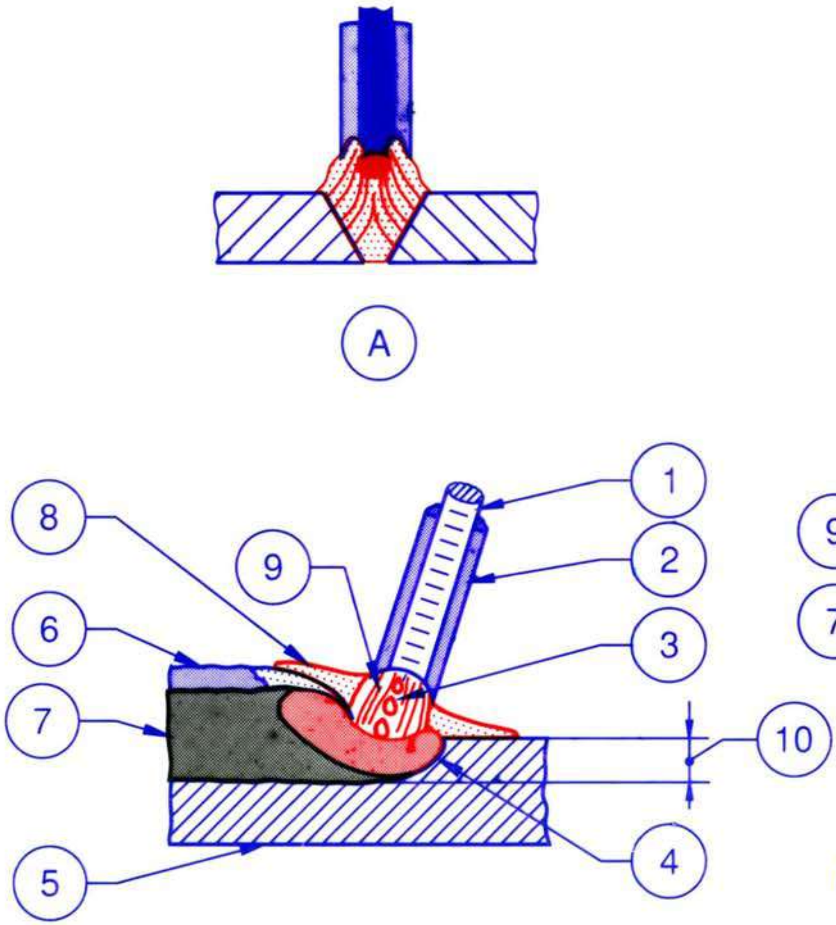

ARC WITH BARE ELECTRODE

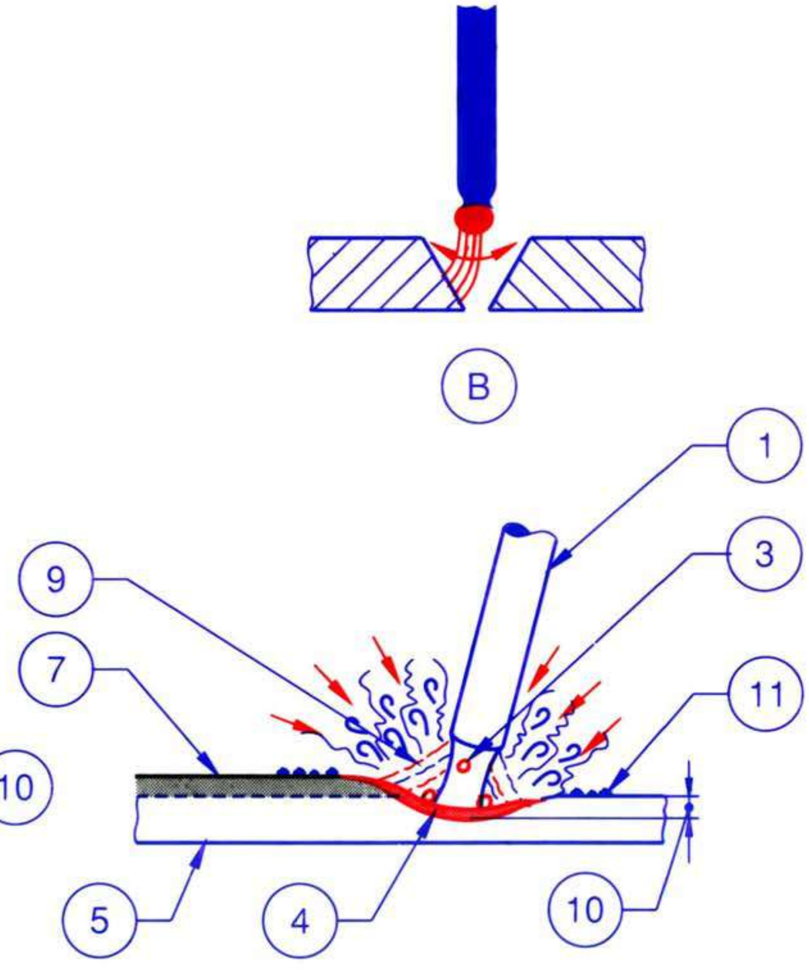

CIMI CENTRAL INSTRUCTIONAL MEDIA INSTITUTE, MADRAS
AN INDO-GERMAN PROJECT

TR 03 01 17 01 95

POLARITY AND ITS EFFECTS

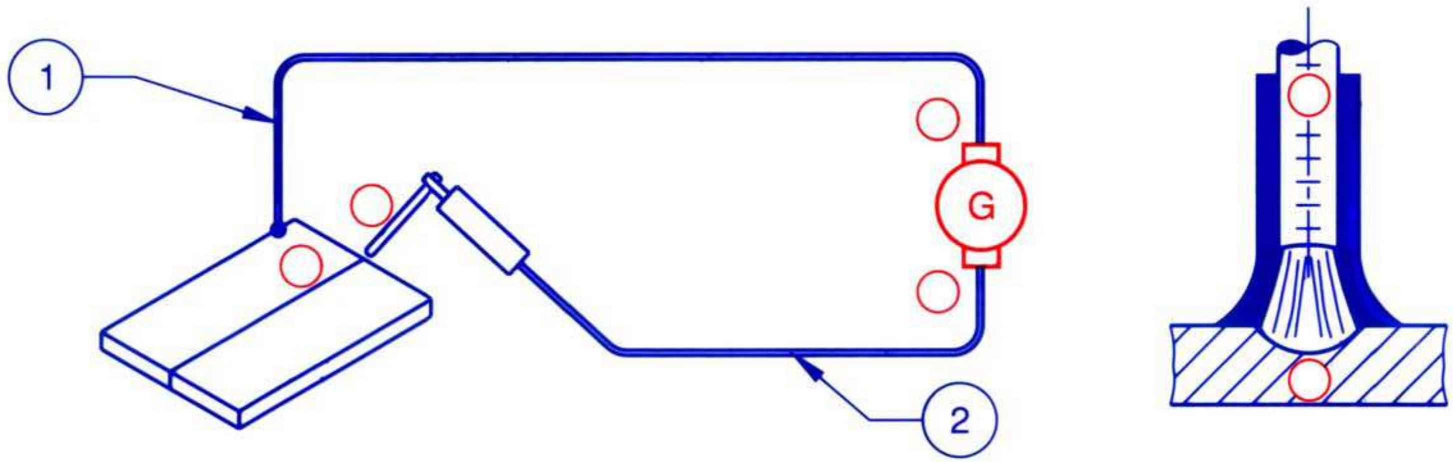

STRAIGHT POLARITY

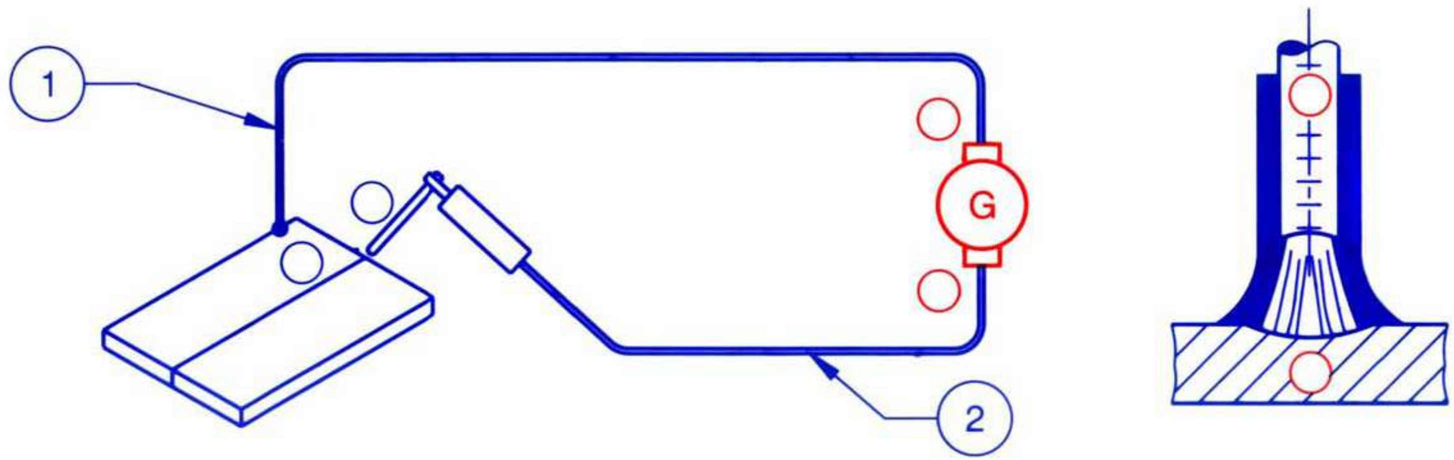

REVERSE POLARITY

NOMENCLATURE OF WELDMENTS

BUTT WELD

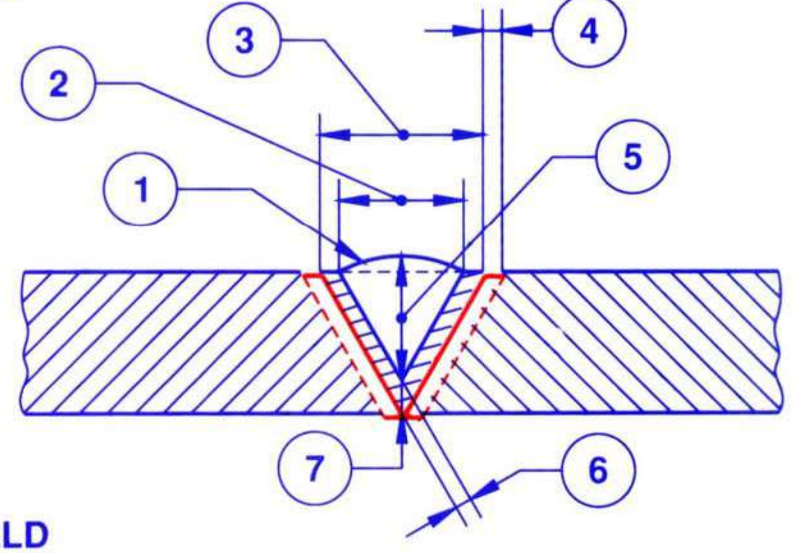

FILLET WELD

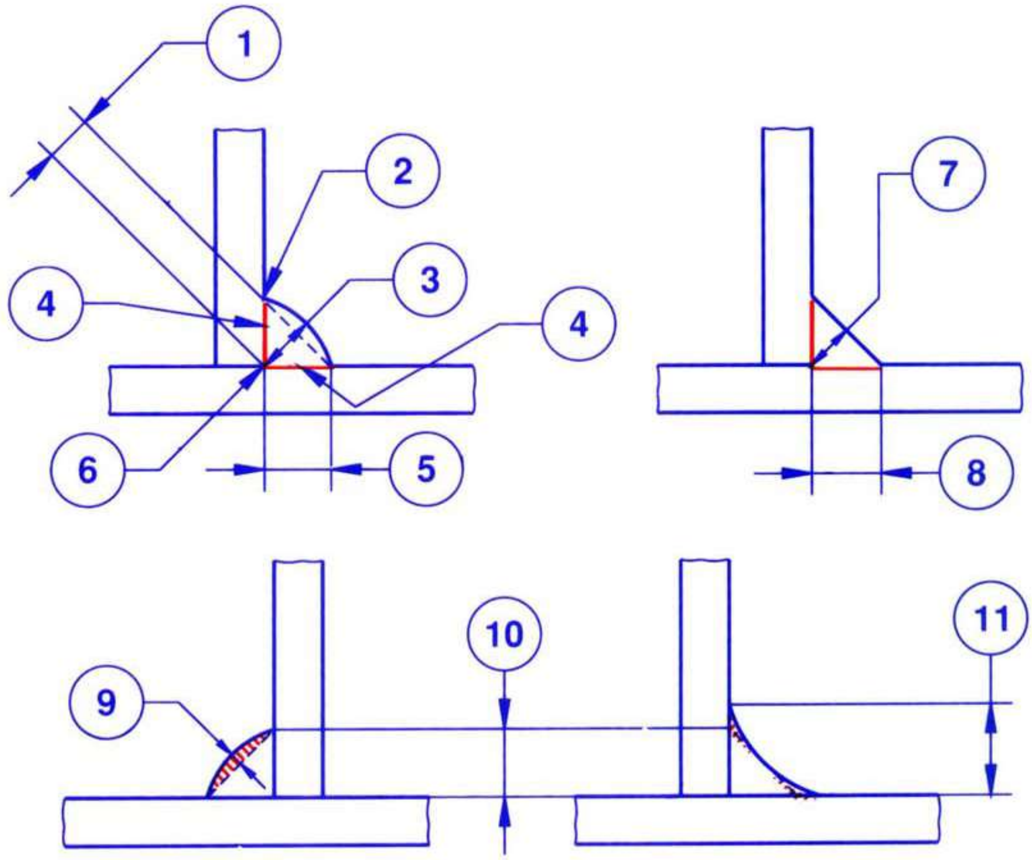

CENTRAL INSTRUCTIONAL MEDIA INSTITUTE, MADRAS
AN INDO-GERMAN PROJECT

TR 01 07 06 01 95

DIFFERENCE BETWEEN FUSION WELDING PROCESSES

GAS WELDING

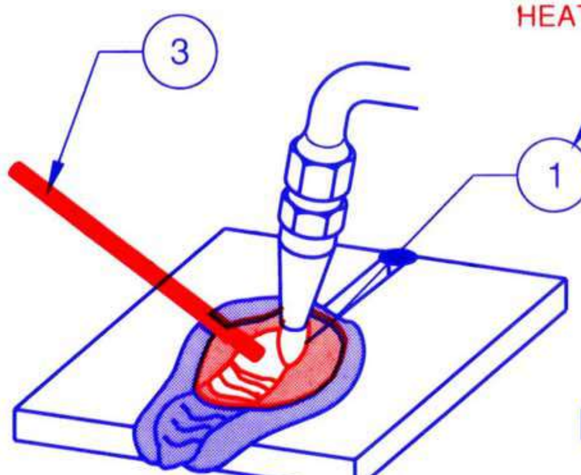

HEAT APPLIED
BY

MANUAL ARC WELDING

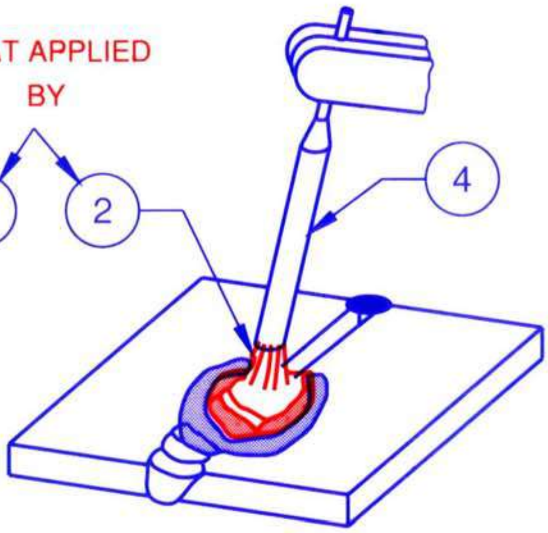

TUNGSTEN INERT GAS WELDING

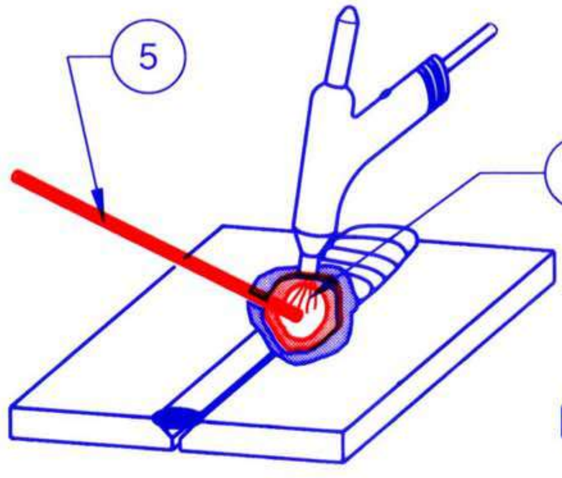

METAL INERT GAS WELDING

HEAT APPLIED
BY

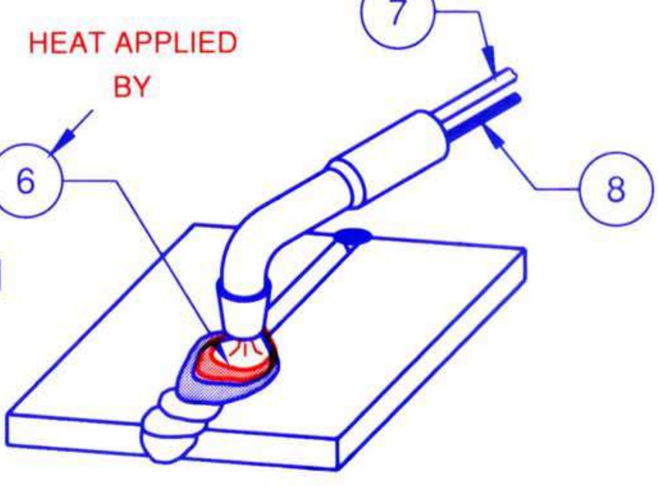

ARC BLOW AND ITS EFFECTS

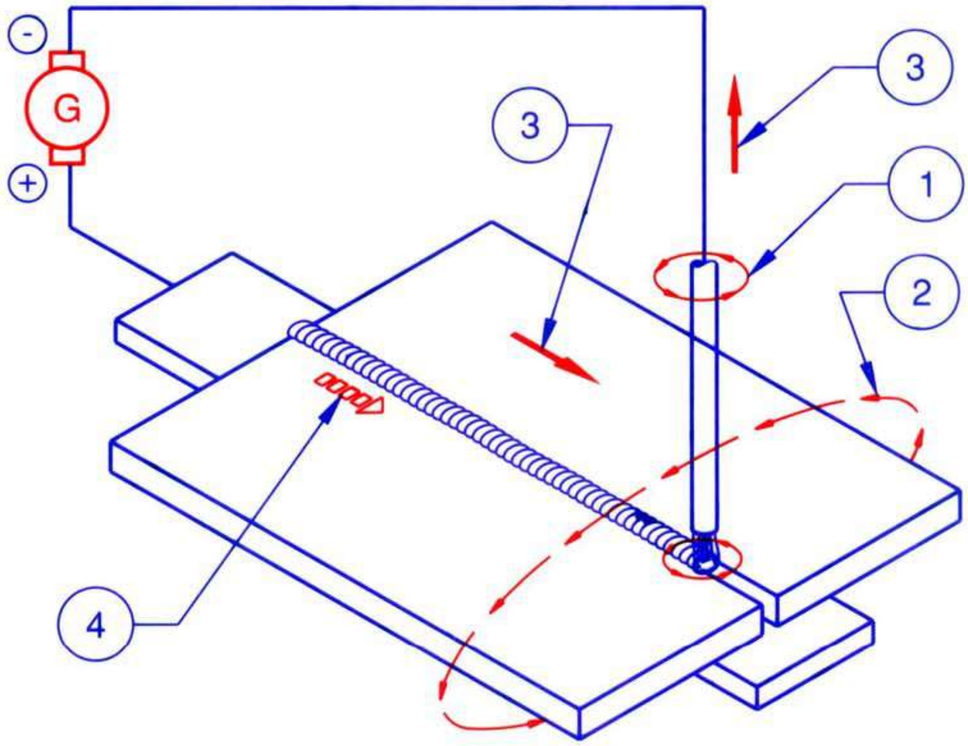

COMMON REASONS FOR THE ARC BLOW EFFECTS IN PARTICULAR WHEN USING DIRECT CURRENT

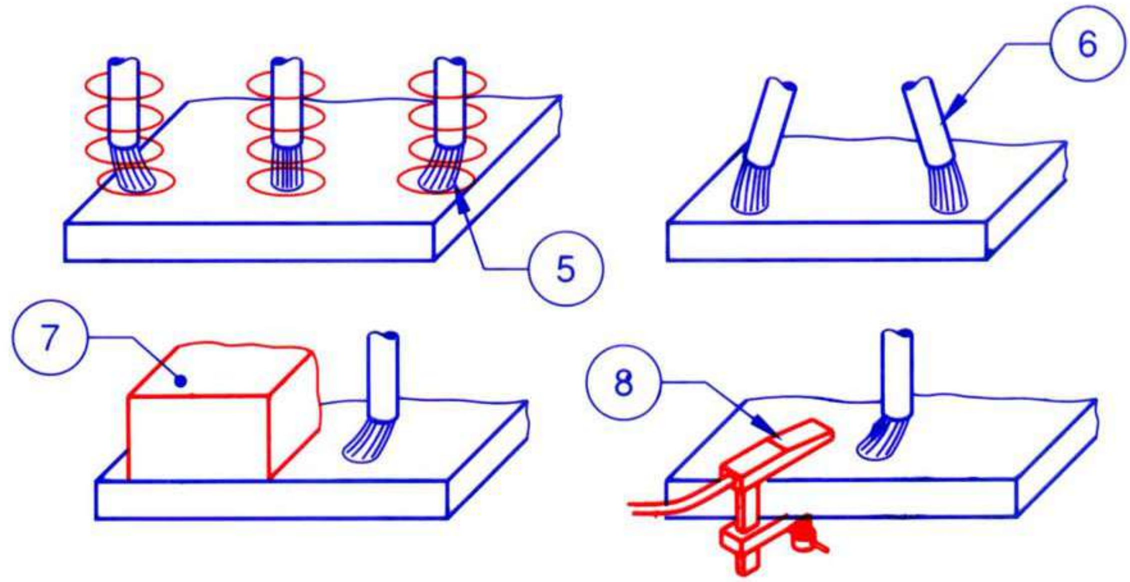

RADIOGRAPHY TEST

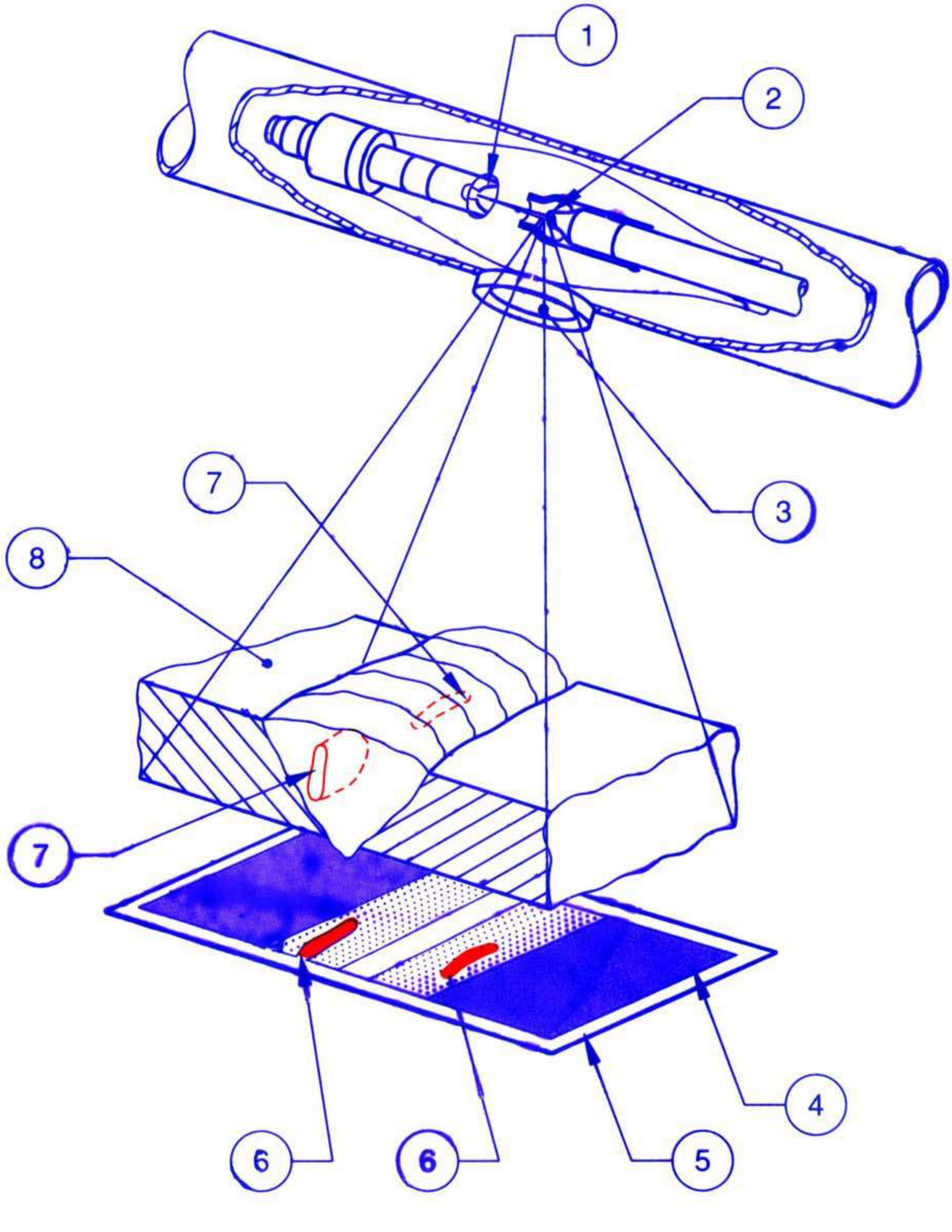

AUTOMATIC SUBMERGED ARC WELDING

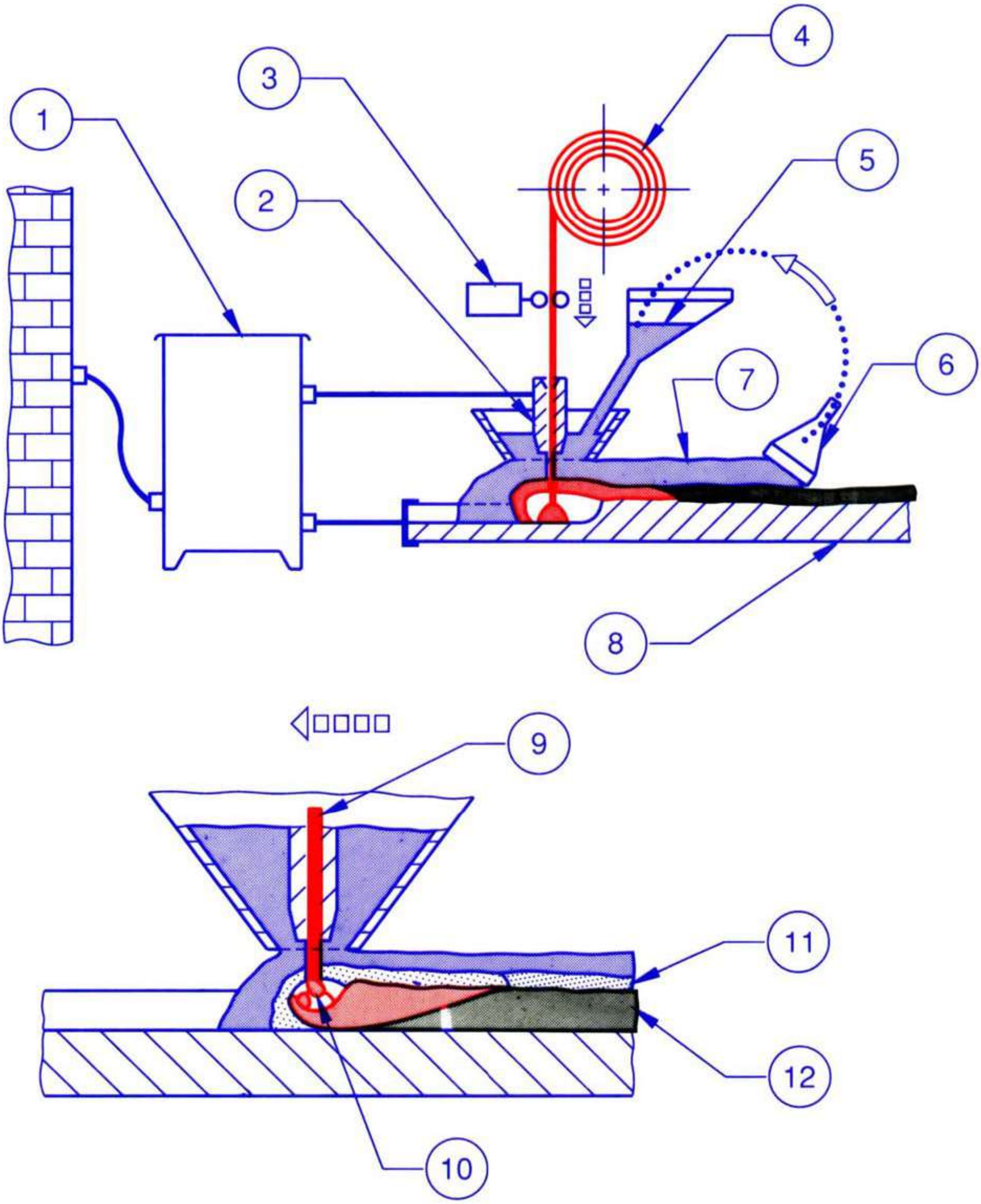

SPOT WELDING

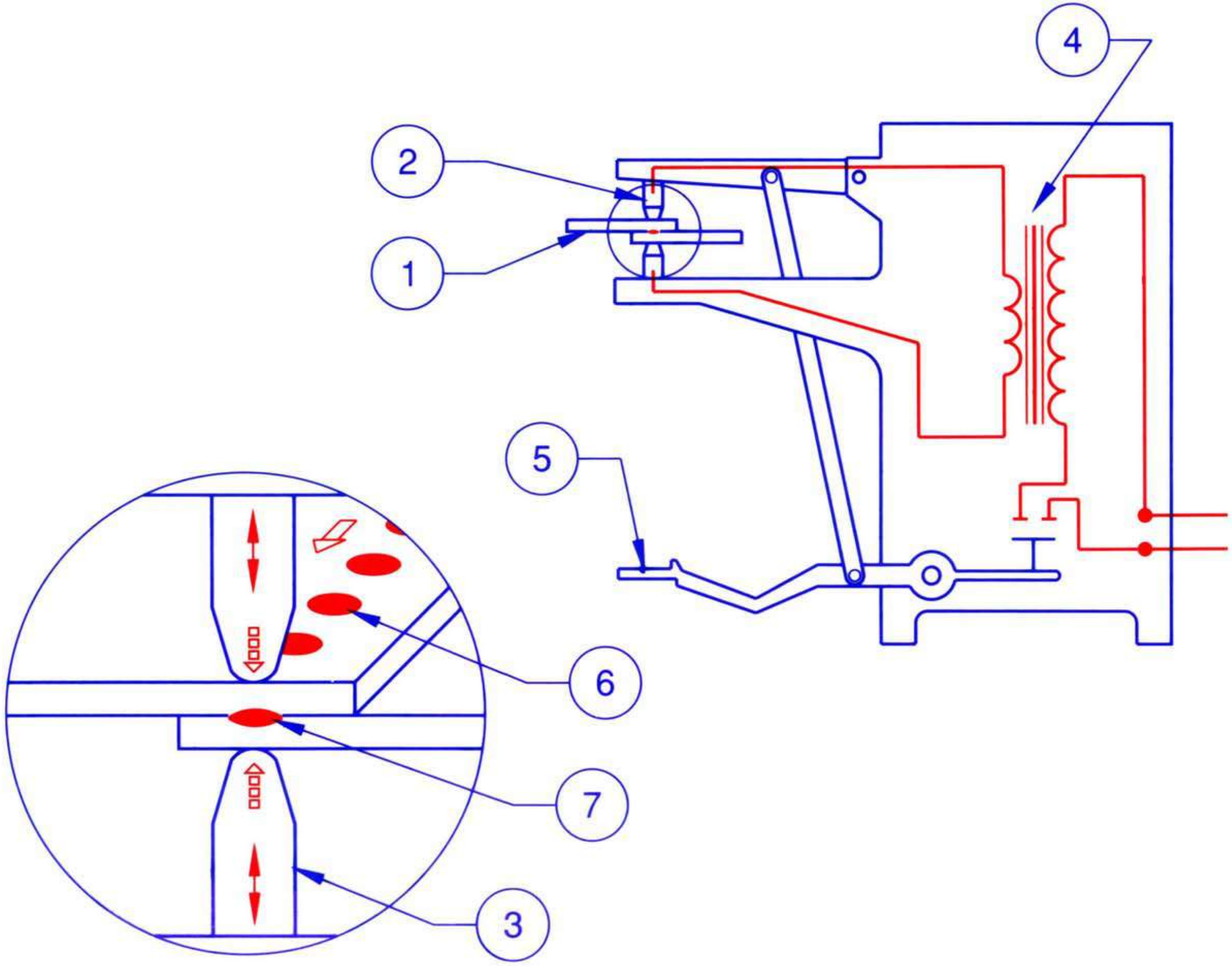

SEAM WELDING

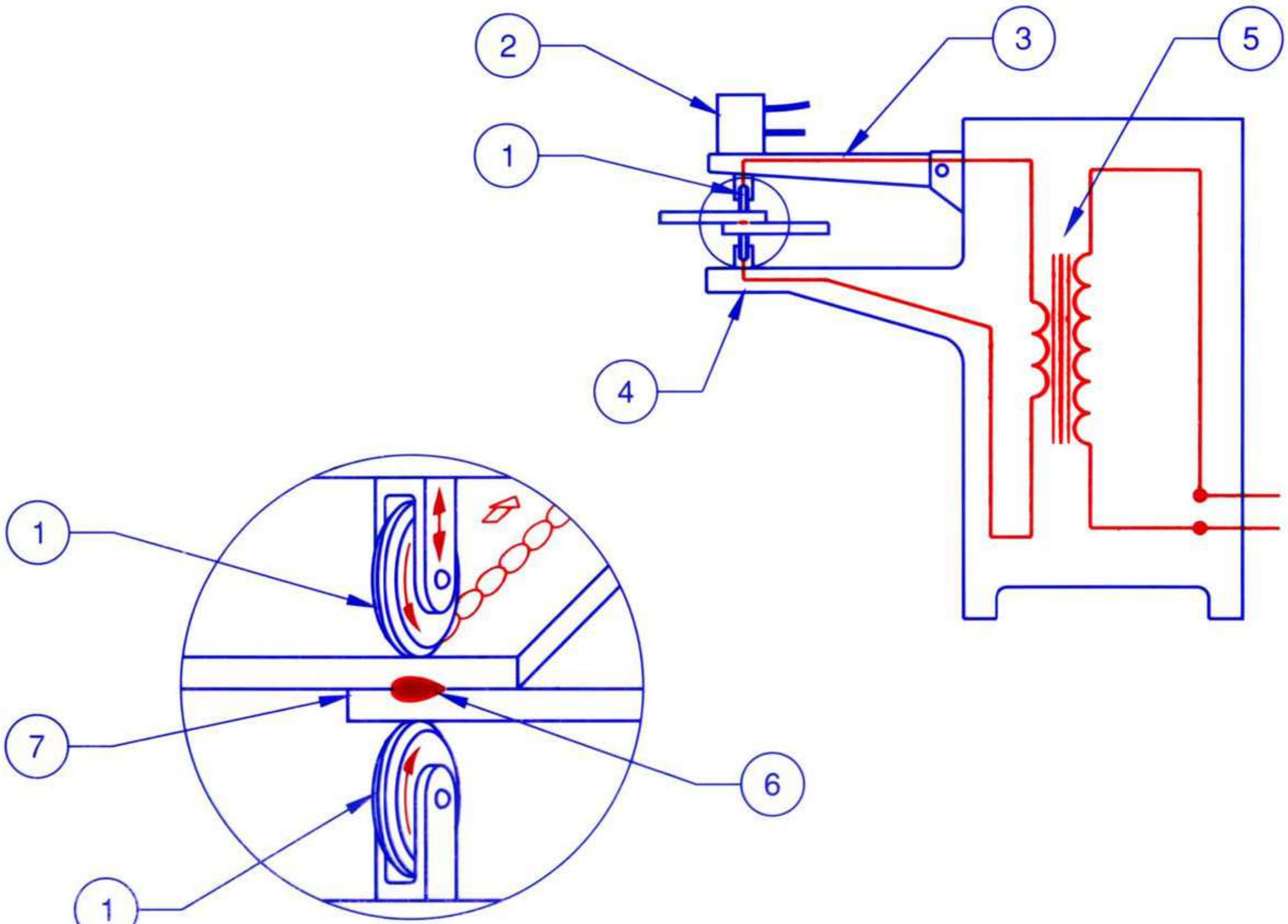

CIMI CENTRAL INSTRUCTIONAL MEDIA INSTITUTE, MADRAS
AN INDO-GERMAN PROJECT

TR 03 01 21 01 95

METAL INERT GAS (MIG) WELDING

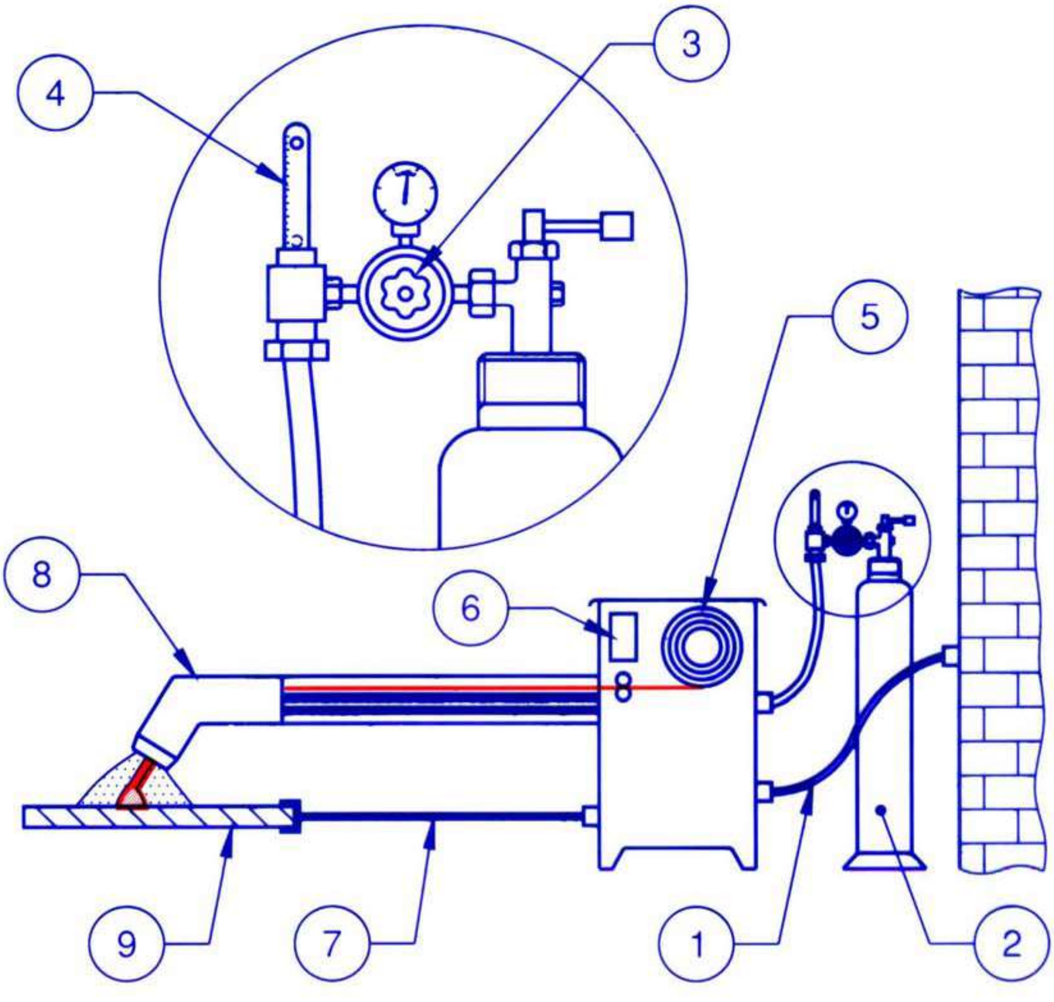

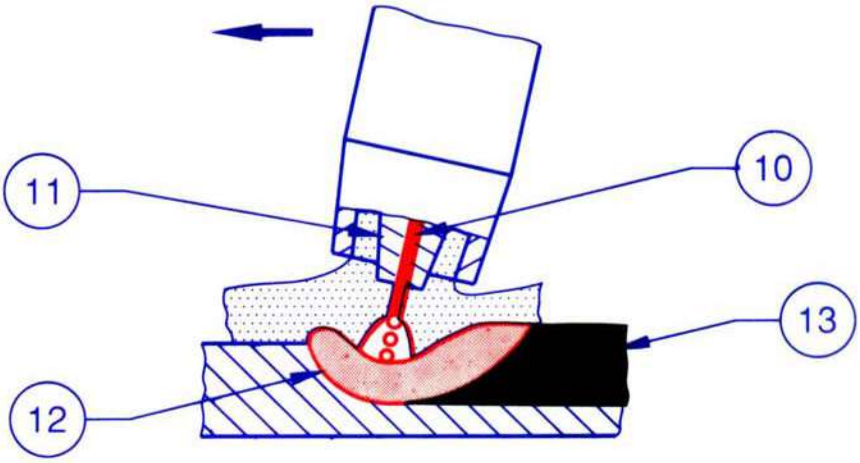

CIMI CENTRAL INSTRUCTIONAL MEDIA INSTITUTE, MADRAS
AN INDO-GERMAN PROJECT
TR 03 01 21 02 95

METAL INERT GAS WELDING (MIG) TORCH

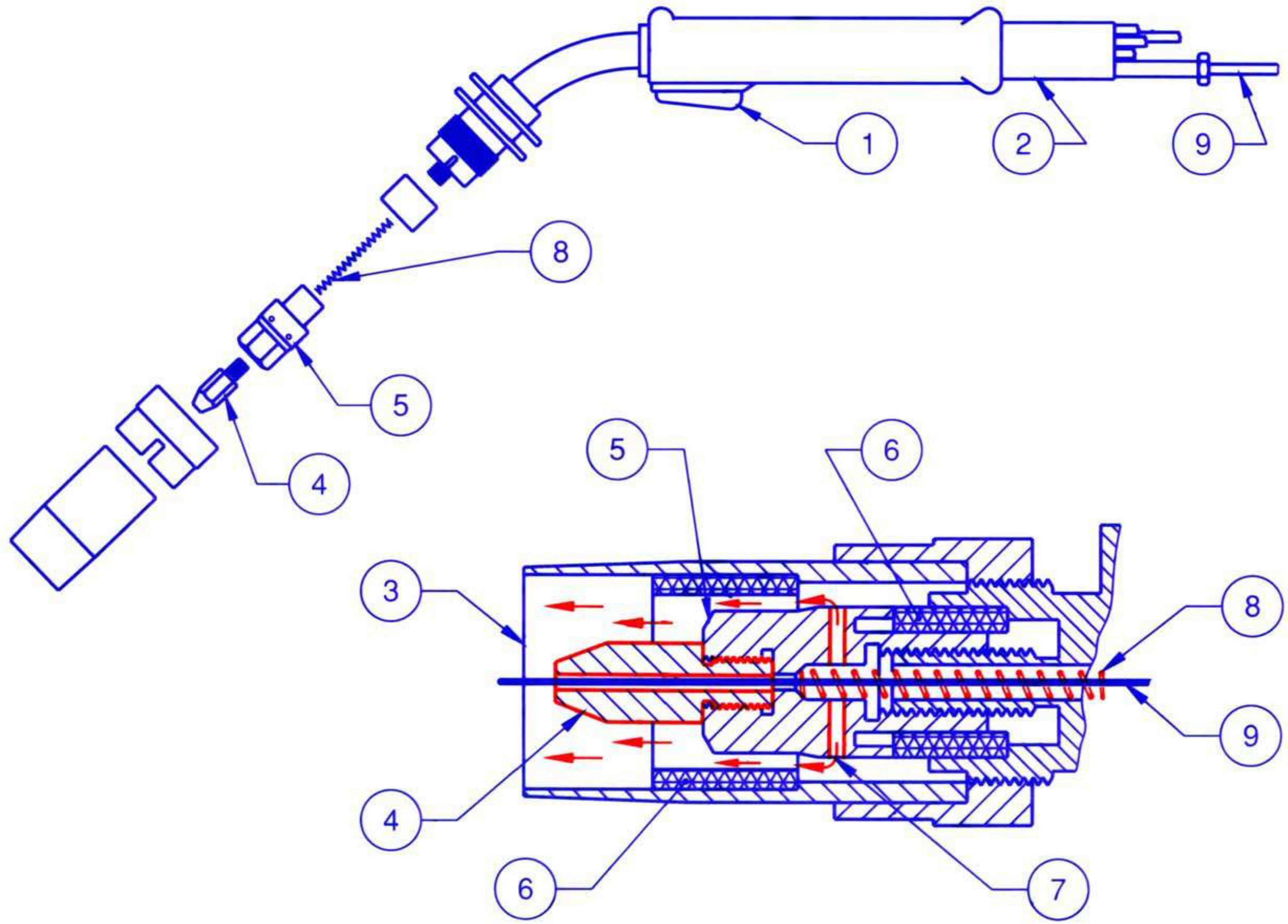

WELDING SYMBOLS

Butt weld between plates with raised edges (the raised edges being melted down completely

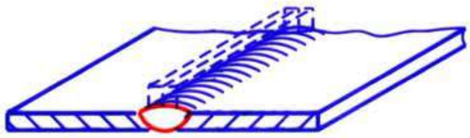

Square butt weld

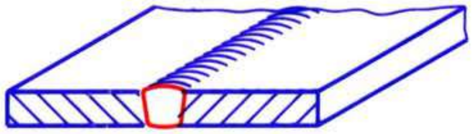

Single V butt weld

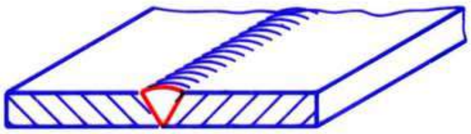

Single bevel butt weld

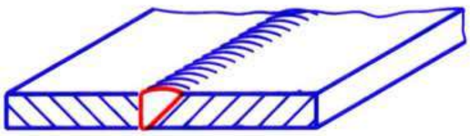

Single V butt weld with broad root face

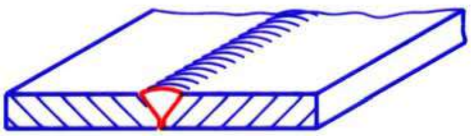

Single bevel butt weld with broad root face

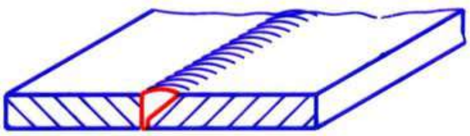

Single U butt weld (parallel or sloping sides)

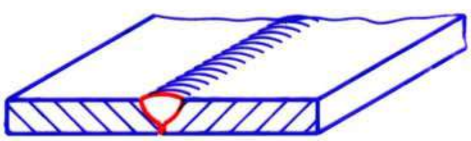

Single J butt weld

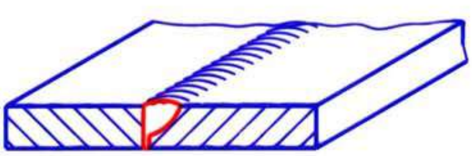

WELDING SYMBOLS

Backing run ; back or
backing weld

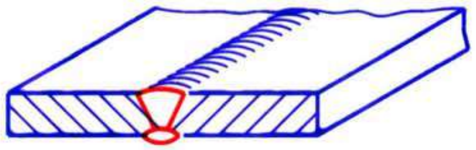

Fillet weld

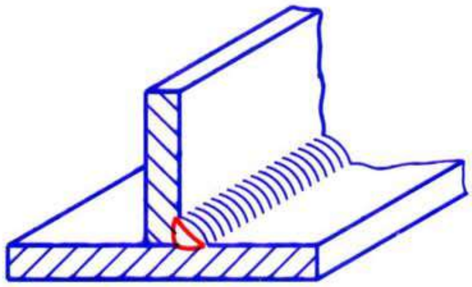

Plug weld ; plug or slot
weld /USA

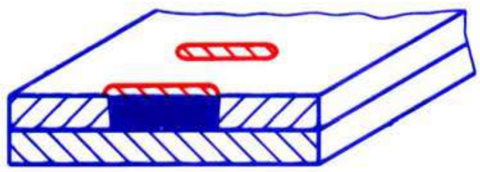

Spot welding

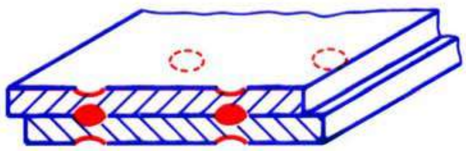

Spot welding

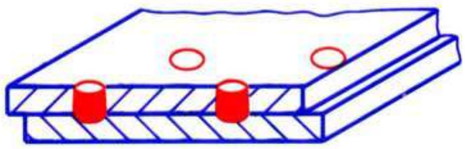

Seam welding

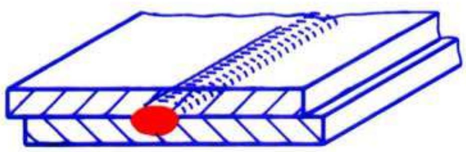

Seam welding

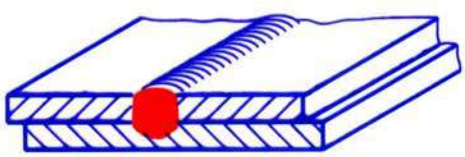

MAGNETO IGNITION SYSTEM (4 CYLINDER ENGINE)

ROTATING MAGNET TYPE
(4 CYLINDER ENGINE)

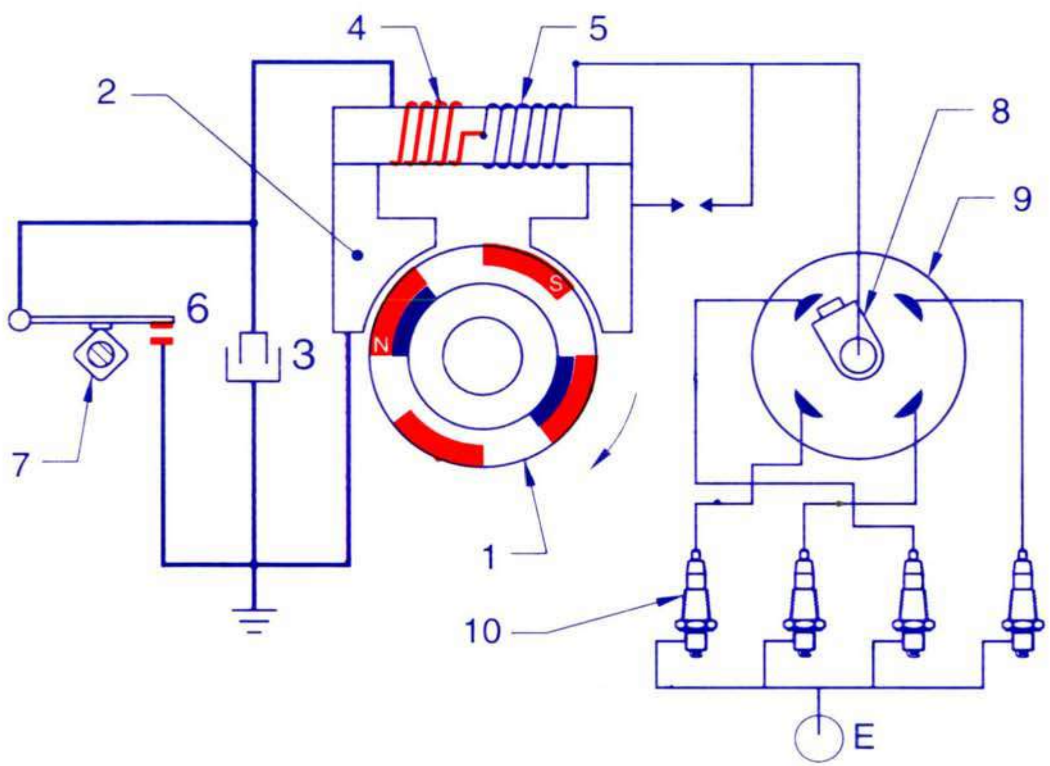

CENTRAL INSTRUCTIONAL MEDIA INSTITUTE, CHENNAI
INDO - GERMAN PROJECT

TR 10 10 04 02 99

CIMI CENTRAL INSTRUCTIONAL MEDIA INSTITUTE, CHENNAI
INDO GERMAN PROJECT
TR 10 10 04 03 99

MAGNETO IGNITION SYSTEM (SINGLE CYLINDER ENGINE)

FLYWHEEL MAGNET MAGNETO (SINGLE CYLINDER ENGINE)

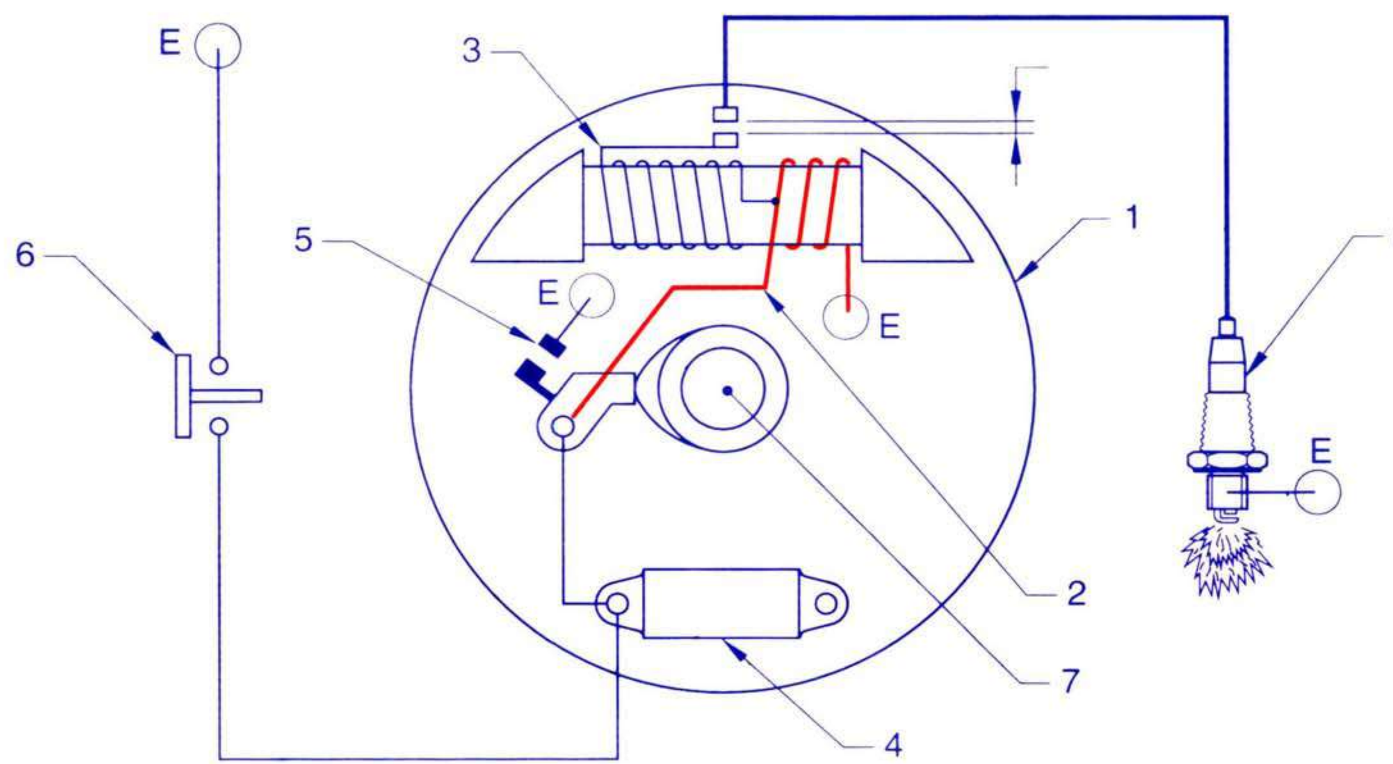

CENTRAL INSTRUCTIONAL MEDIA INSTITUTE, CHENNAI
INDO - GERMAN PROJECT

TR 10 10 05 01 99

ANTI-DAZZLING ARRANGEMENT

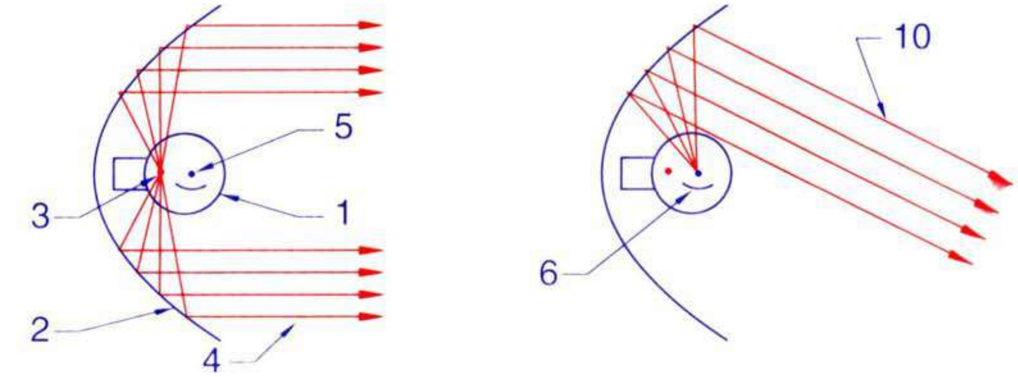

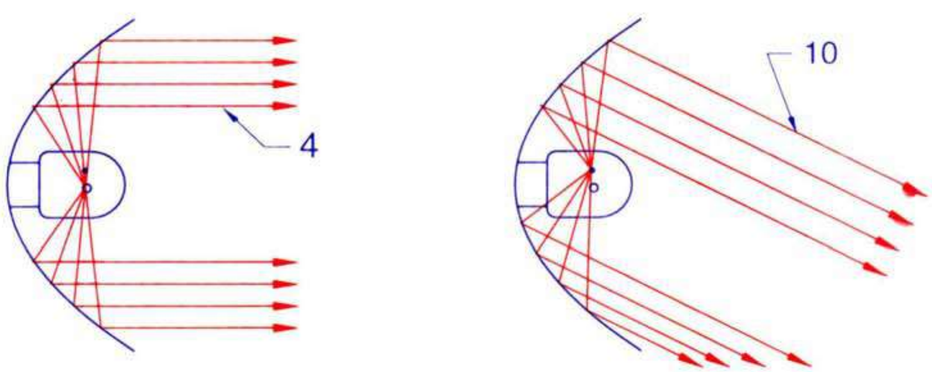

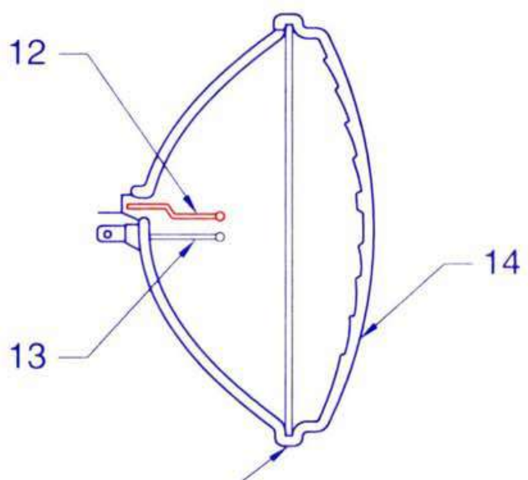

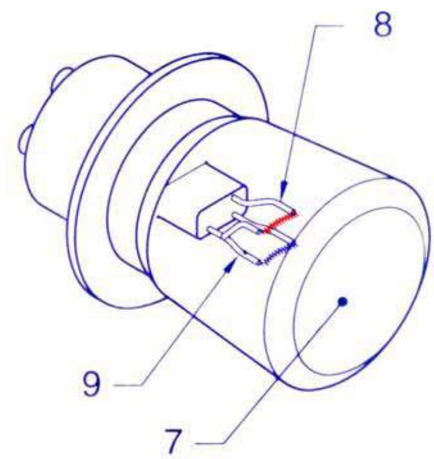

FLASHER UNIT AND ITS CIRCUIT

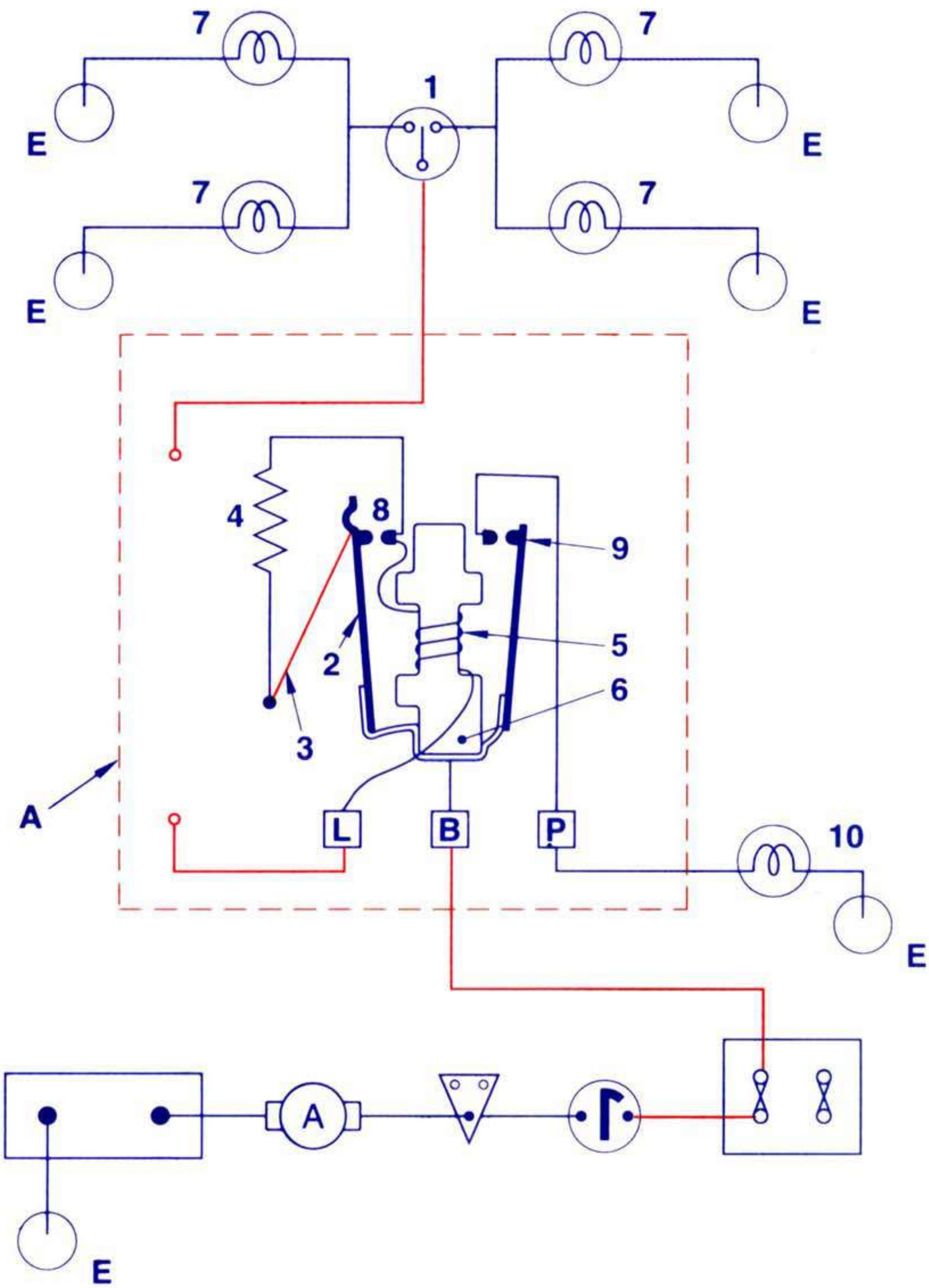

WIRING DIAGRAM OF RELAY TYPE HORN

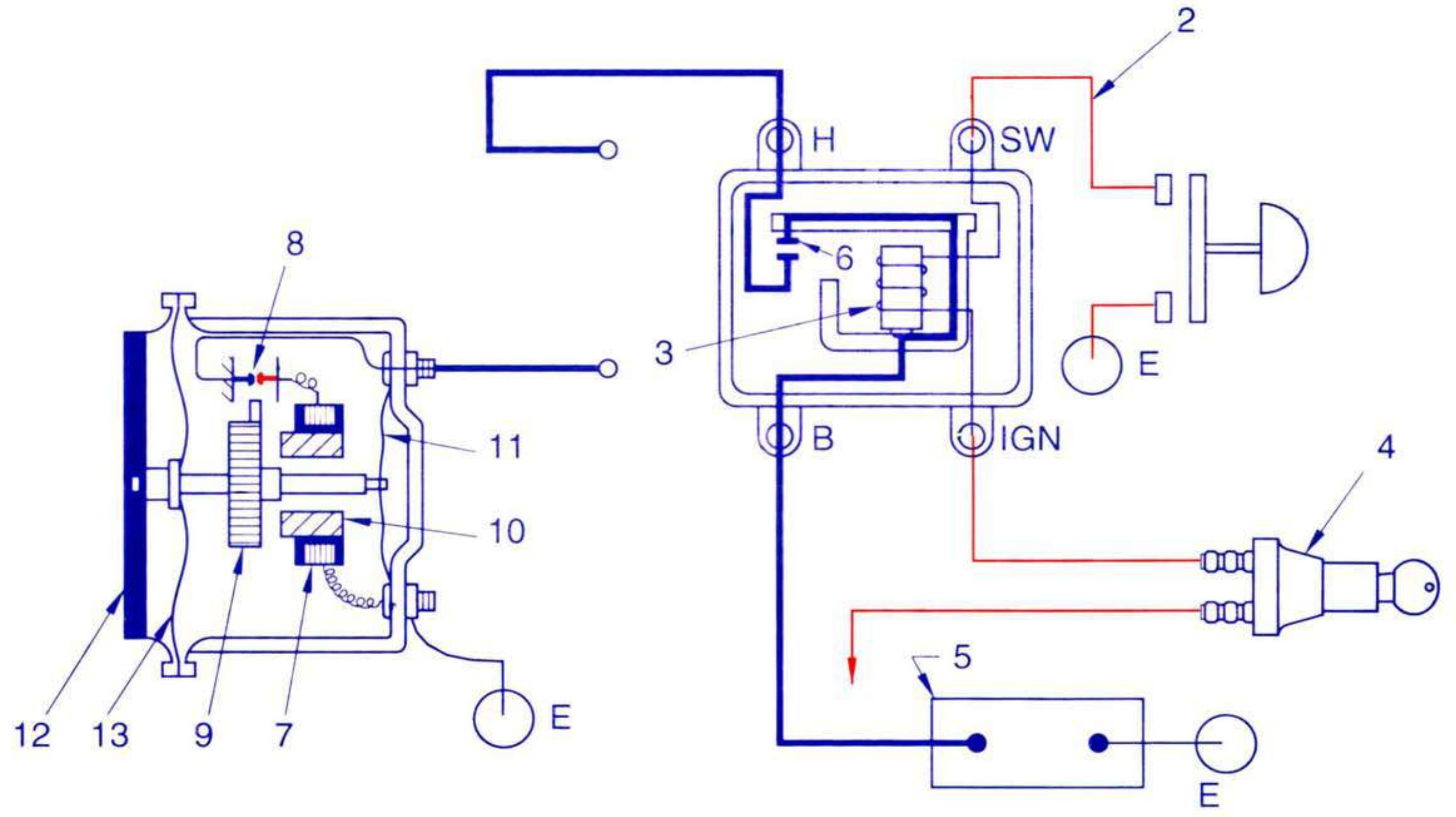

SELF STARTER WIRING CIRCUIT (PETROL ENGINE)

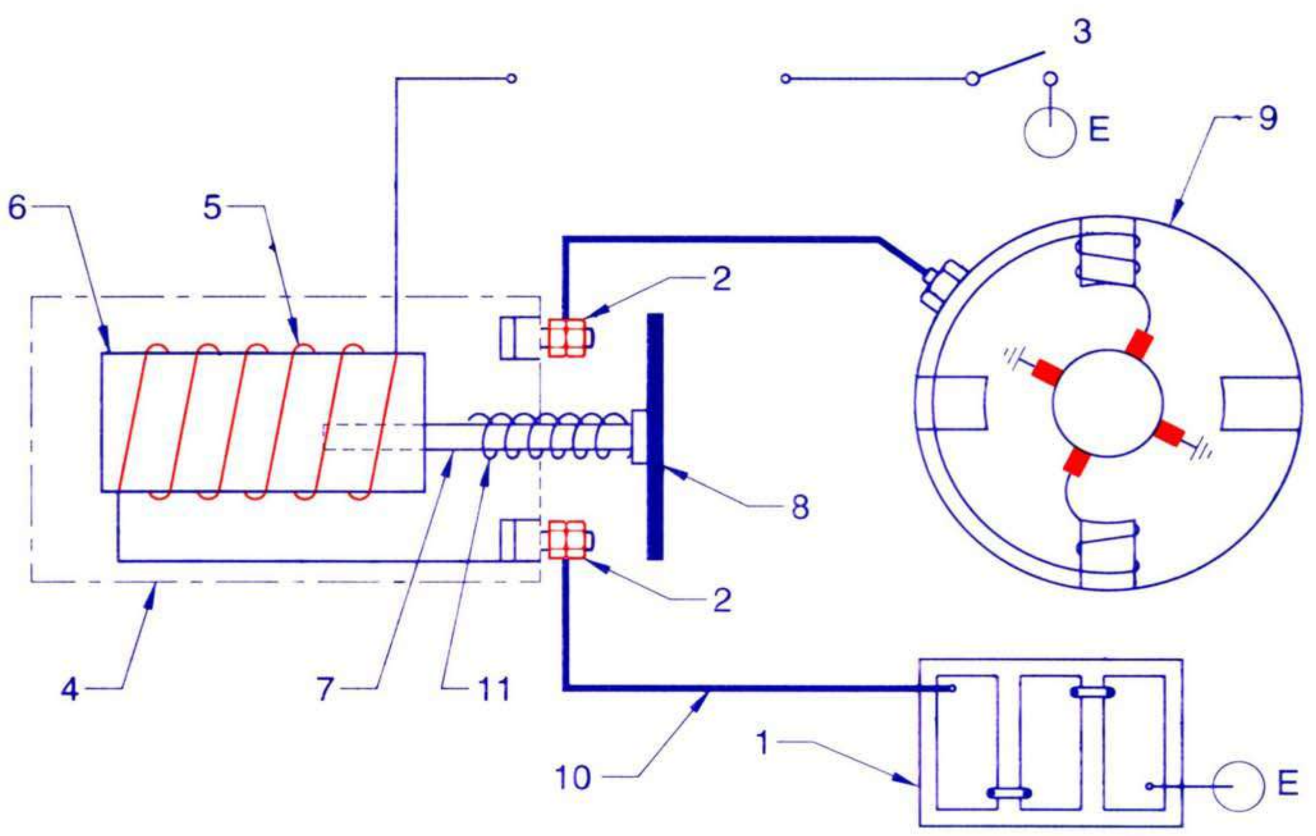

SELF STARTER WIRING CIRCUIT (DIESEL ENGINE)

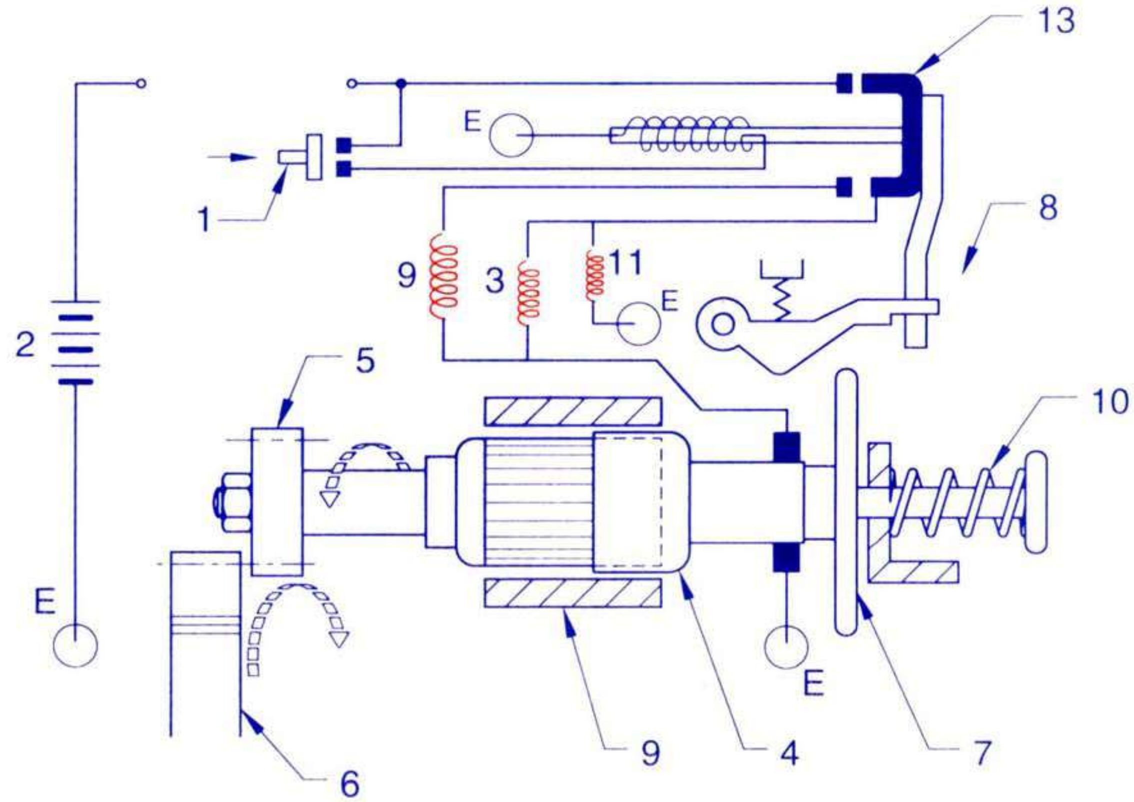

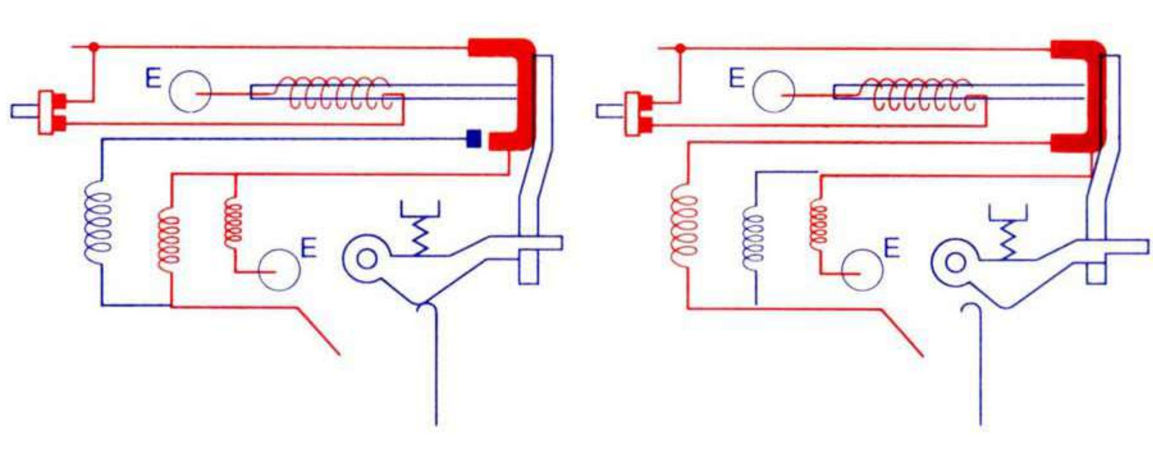

CENTRAL INSTRUCTIONAL MEDIA INSTITUTE, CHENNAI
INDO - GERMAN PROJECT

TR 10 10 02 01 99

WIRING DIAGRAM OF A CHARGING CIRCUIT (VEHICLE)

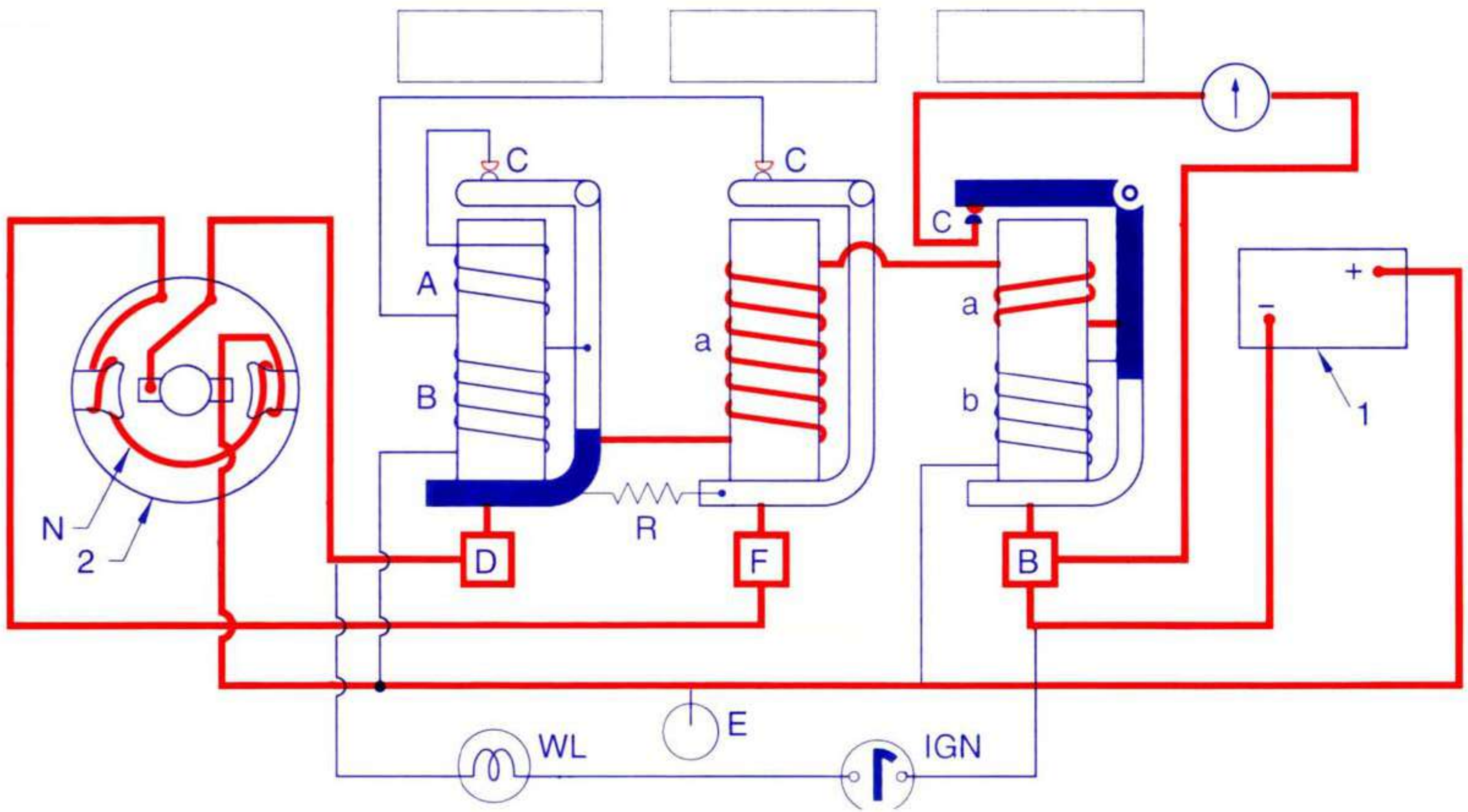

CIRCUIT DIAGRAM OF ALTERNATOR TESTING

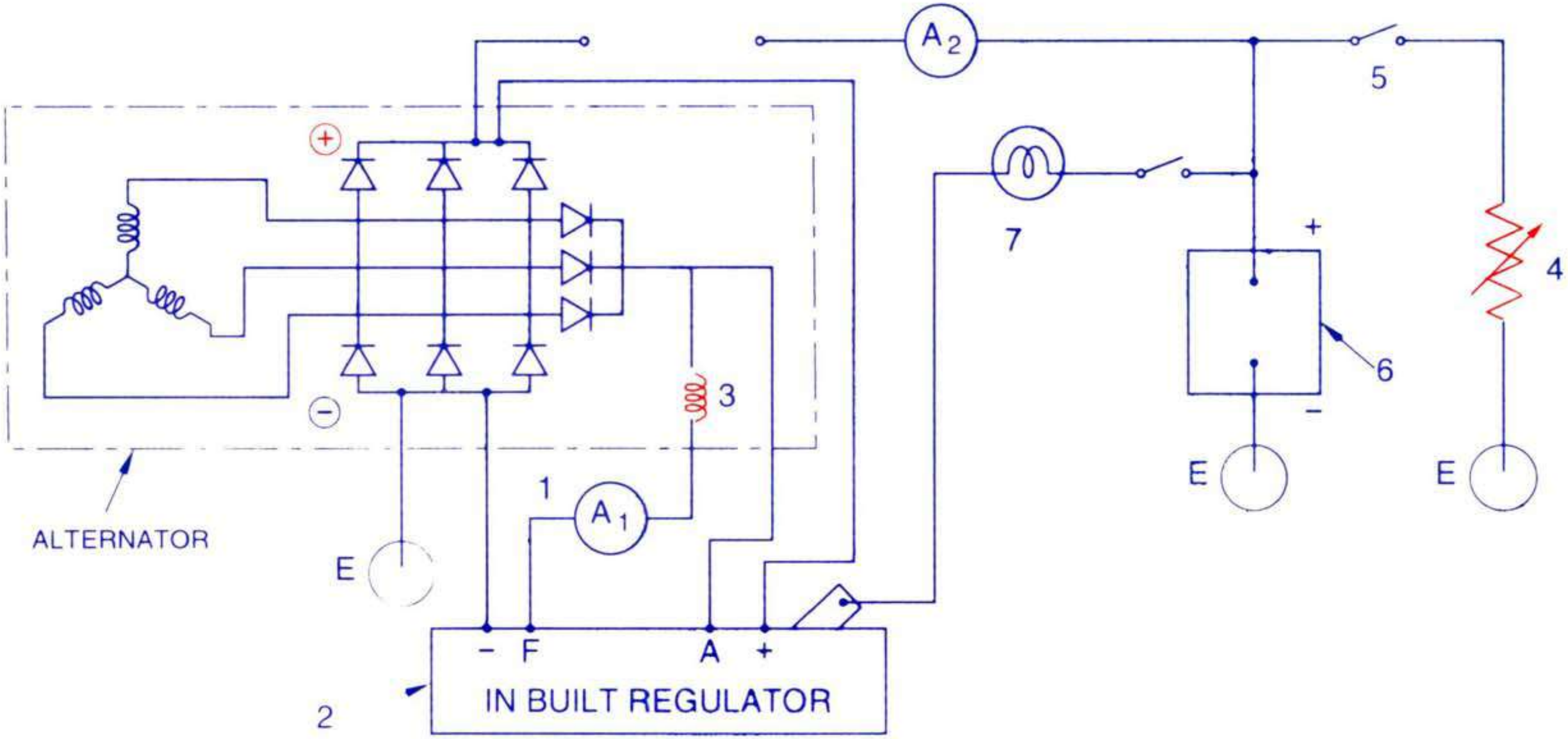

CENTRAL INSTRUCTIONAL MEDIA INSTITUTE, CHENNAI
INDO - GERMAN PROJECT
TR 10 03 04 01 99

SYNCHRONISER UNIT AND ITS ACTION

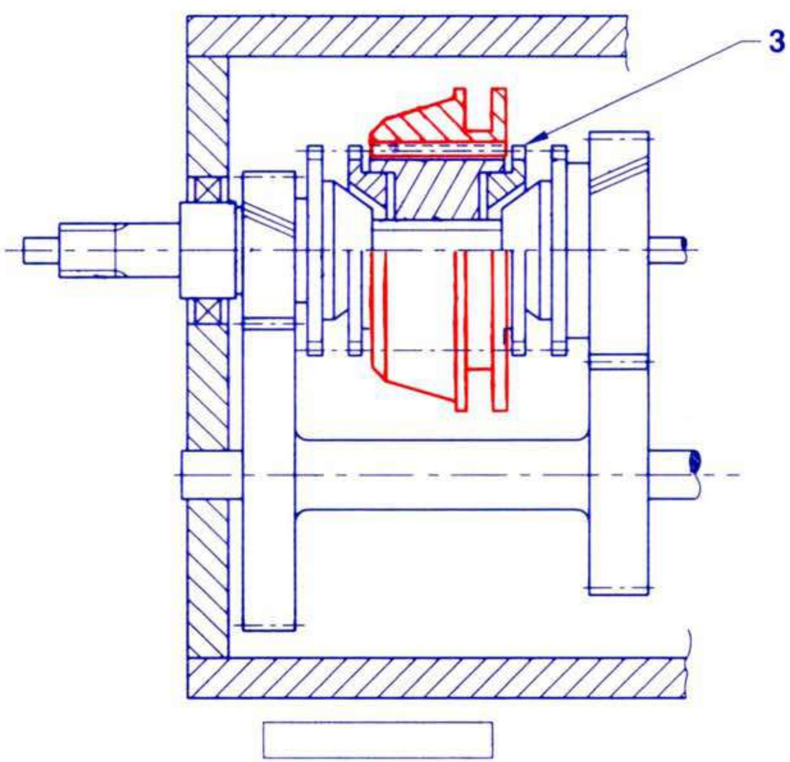

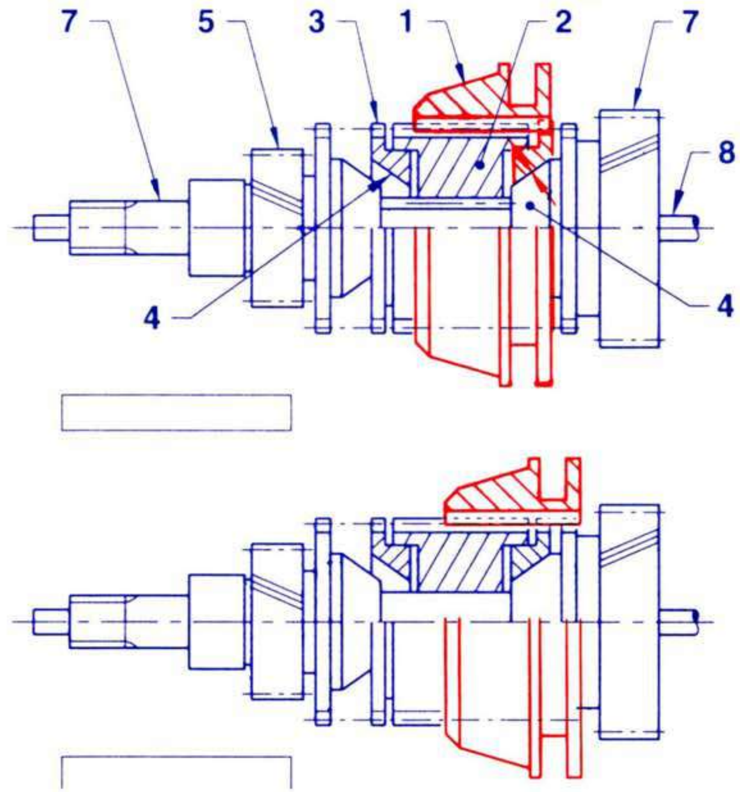

CENTRAL INSTRUCTIONAL MEDIA INSTITUTE, CHENNAI
INDO - GERMAN PROJECT

LAYOUT OF 4 WHEEL DRIVE

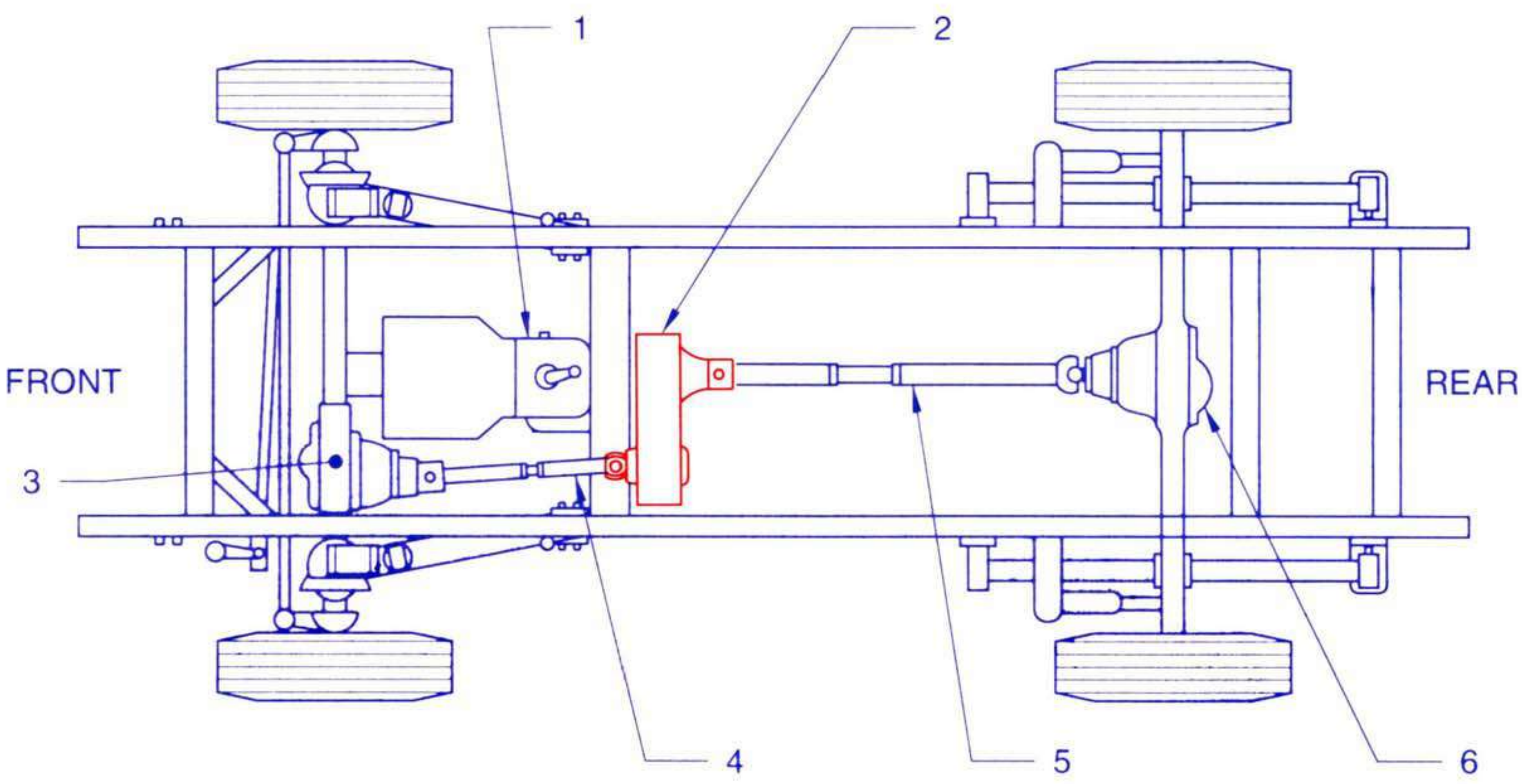

TR 10 03 07 01 99

FOUR WHEEL DRIVE TRANSFER CASE (HIGH RANGE)

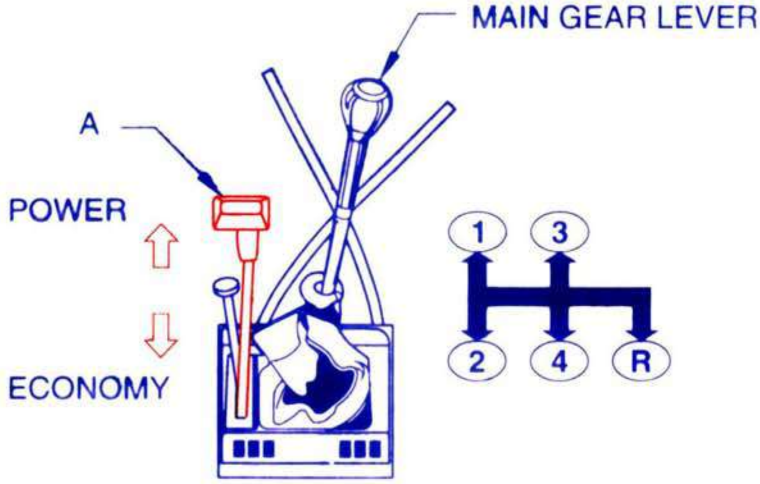

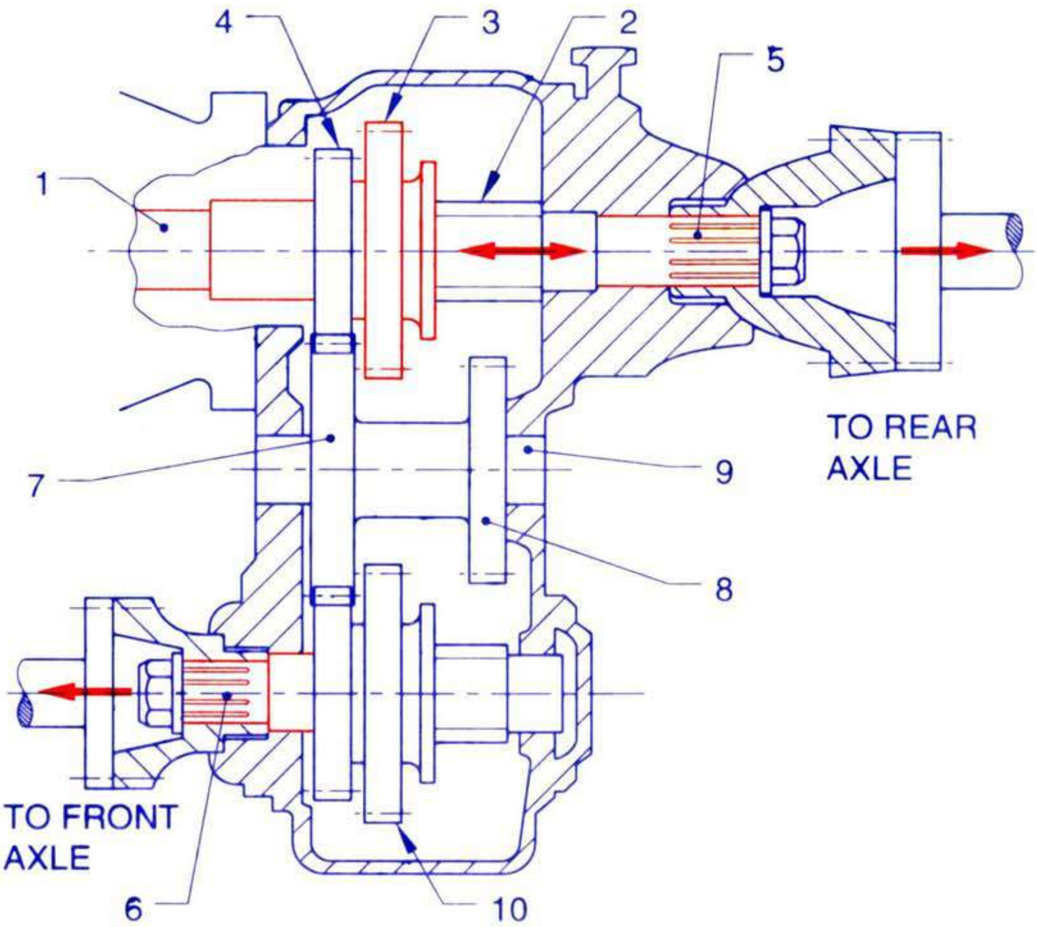

INDEPENDENT FRONT WHEEL SUSPENSION (MACPHERSON & COIL SPRING)

MACPHERSON STURT TYPE SUSPENSION

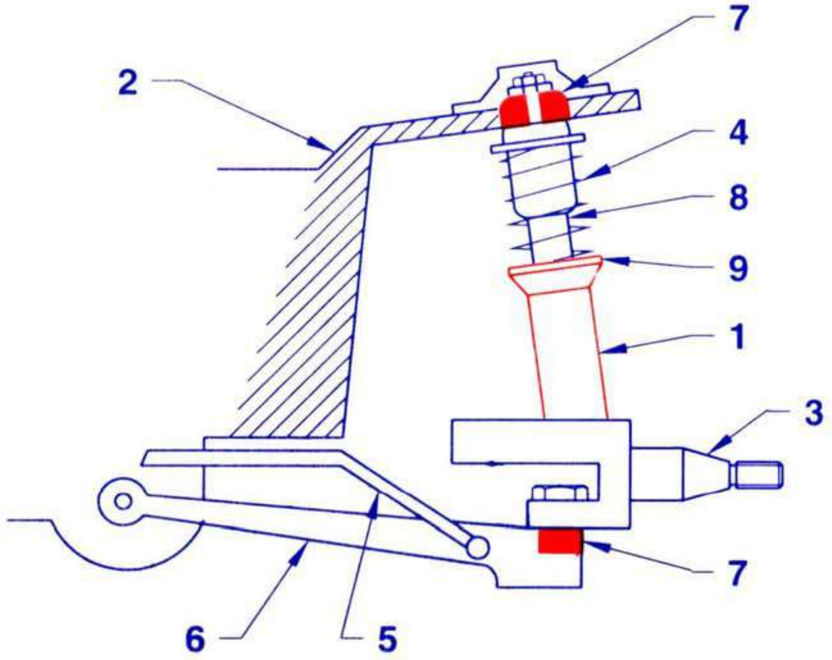

COIL SPRING SUSPENSION

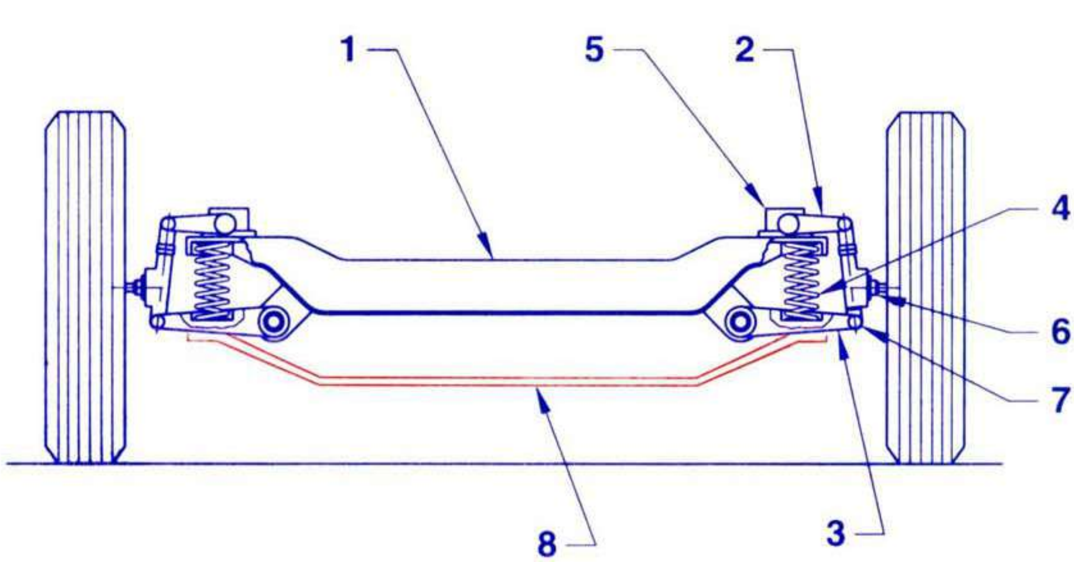

VALVE TIMING DIAGRAM
(4 STROKE CYCLE DIESEL ENGINE)

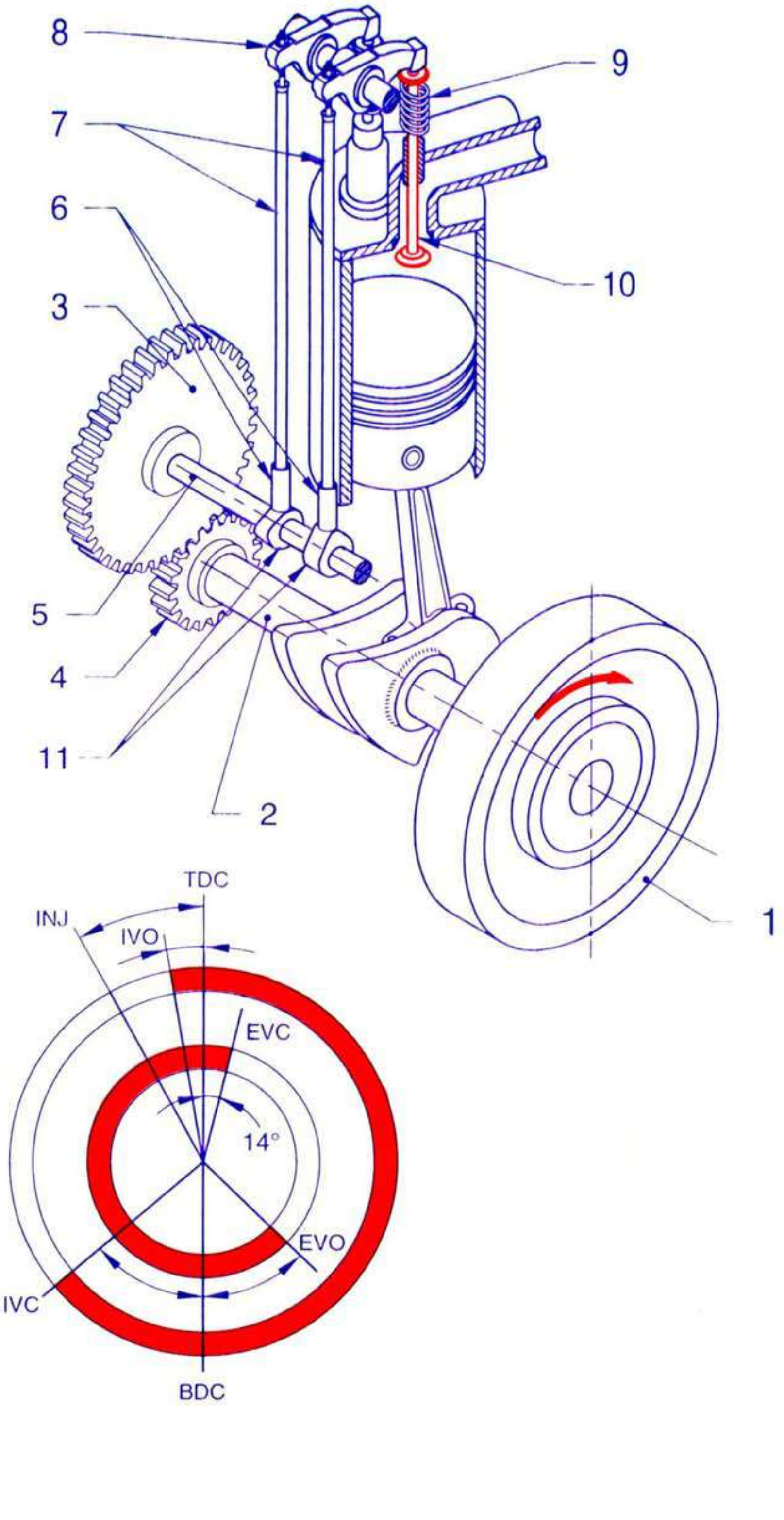

CRANKCASE VENTILATION

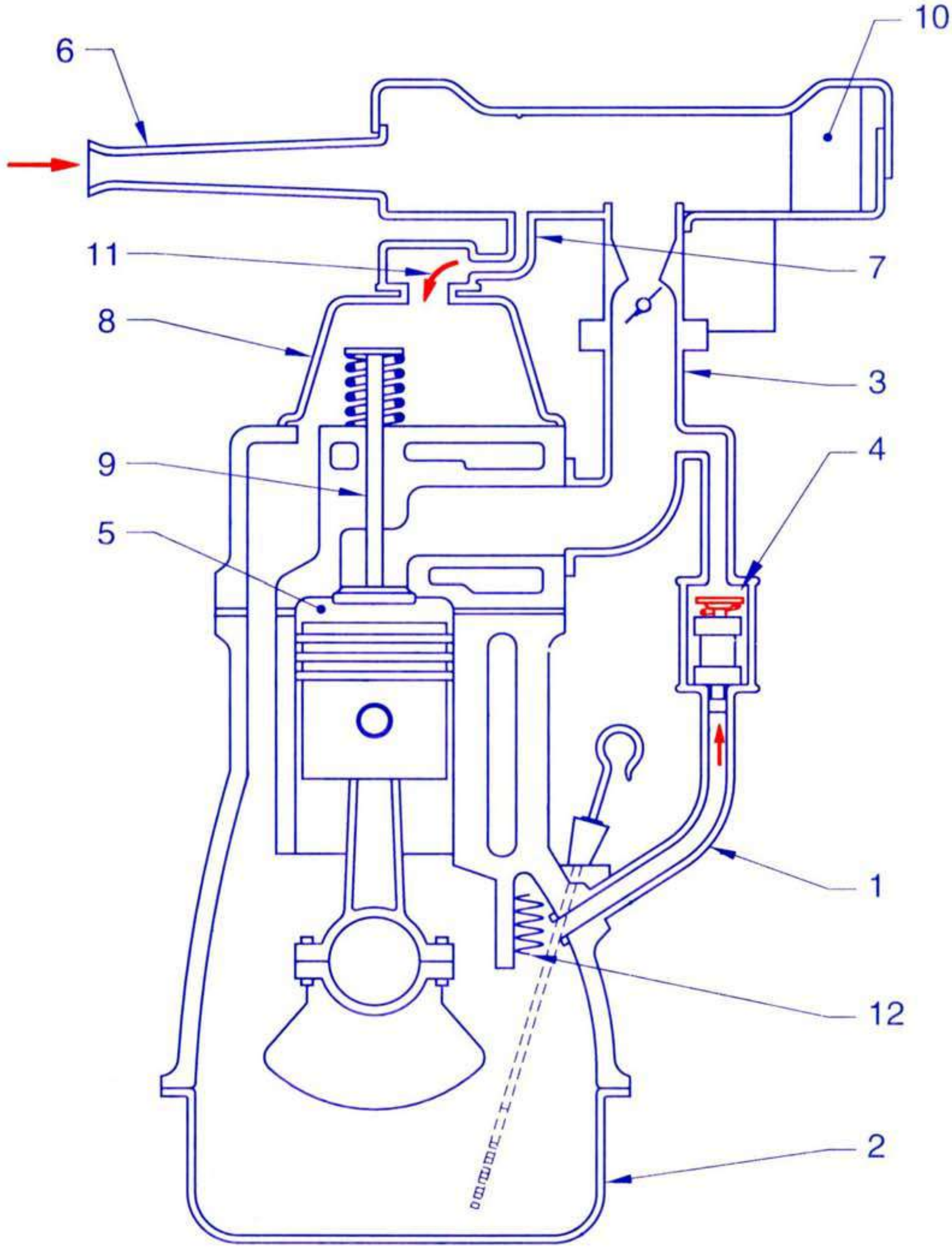

COMPARISON OF FUNCTION
MULTI HOLE AND PINTLE NOZZLES

(A)

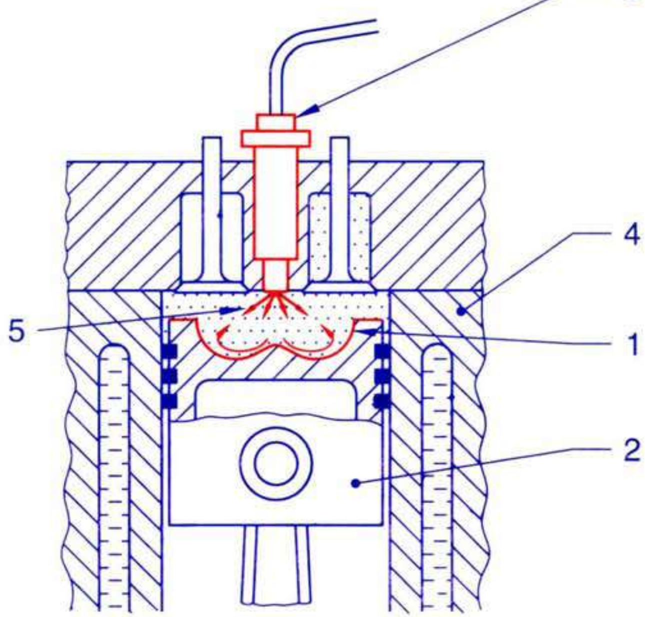

(B)

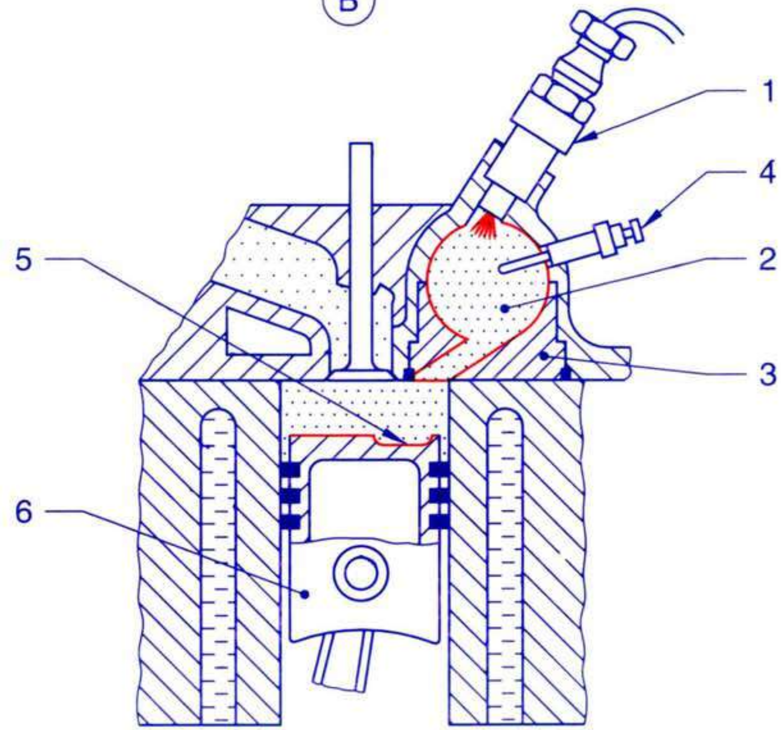

CENTRAL INSTRUCTIONAL MEDIA INSTITUTE, CHENNAI
INDO - GERMAN PROJECT
TR 10 01 03 07 99

FUEL FEED SYSTEM (DIESEL INLINE JERK PUMP)

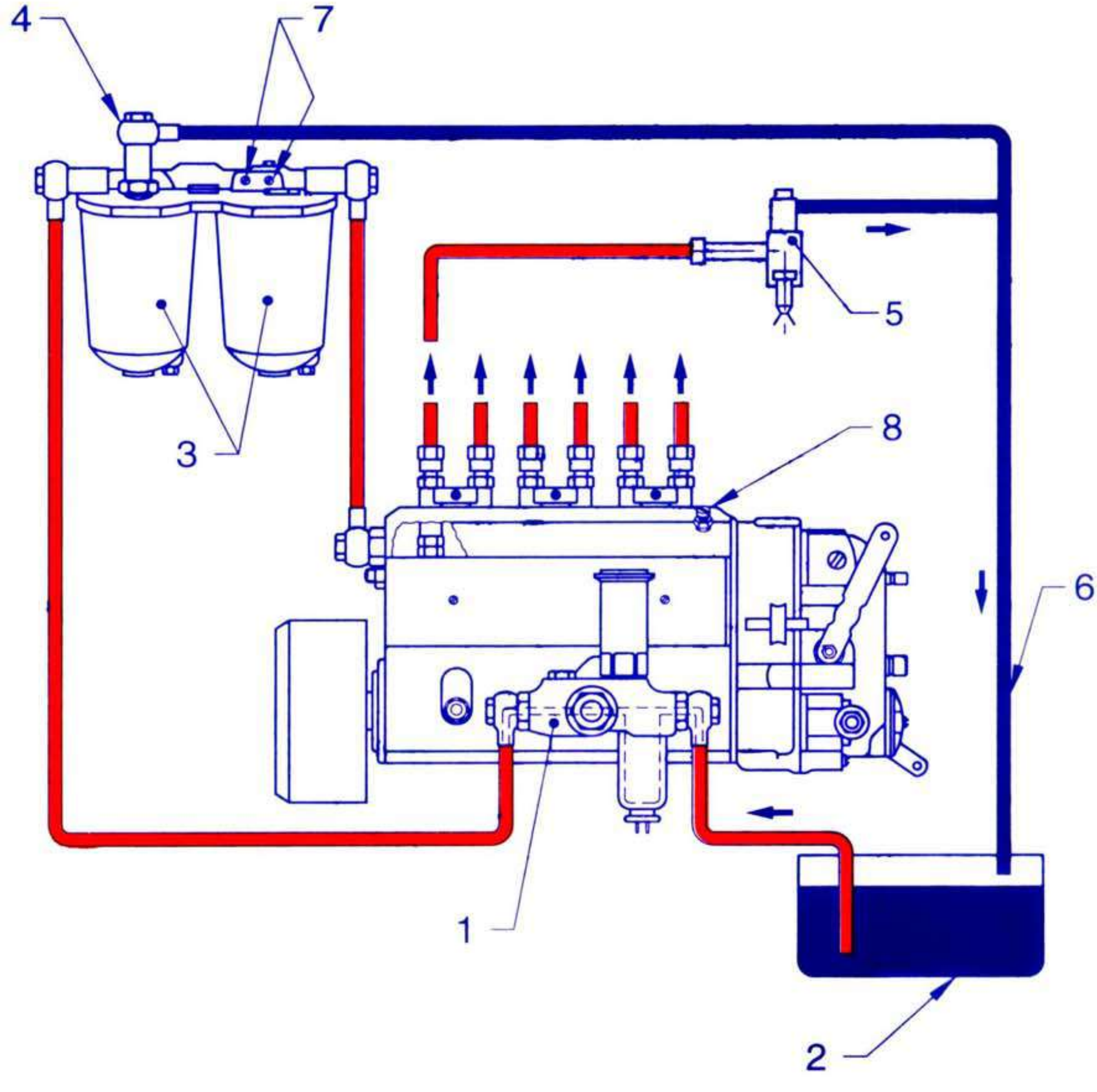

FUEL INJECTION PUMP

(A) FUEL DELIVERY POSITION

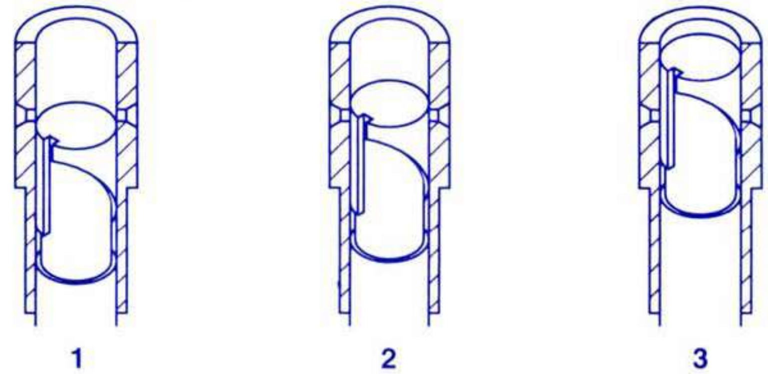

(B) ARRANGEMENT OF PLUNGER & BARREL

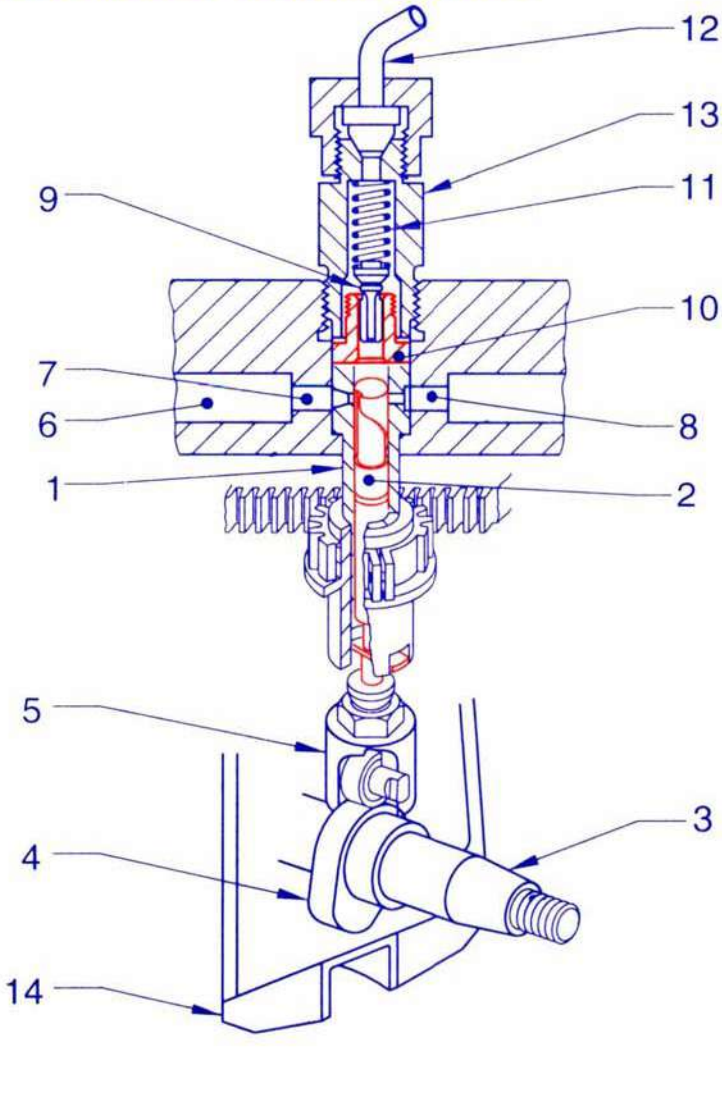

DIESEL ENGINE FUEL FILTER

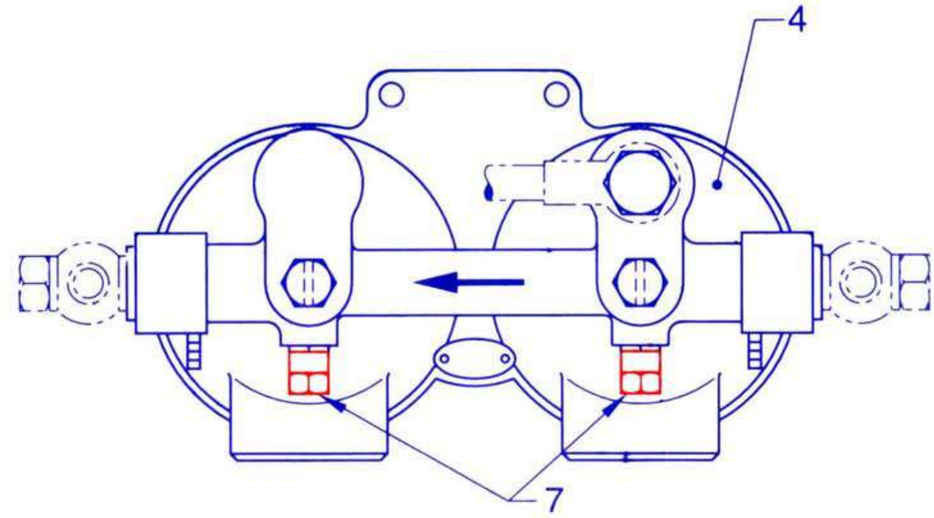

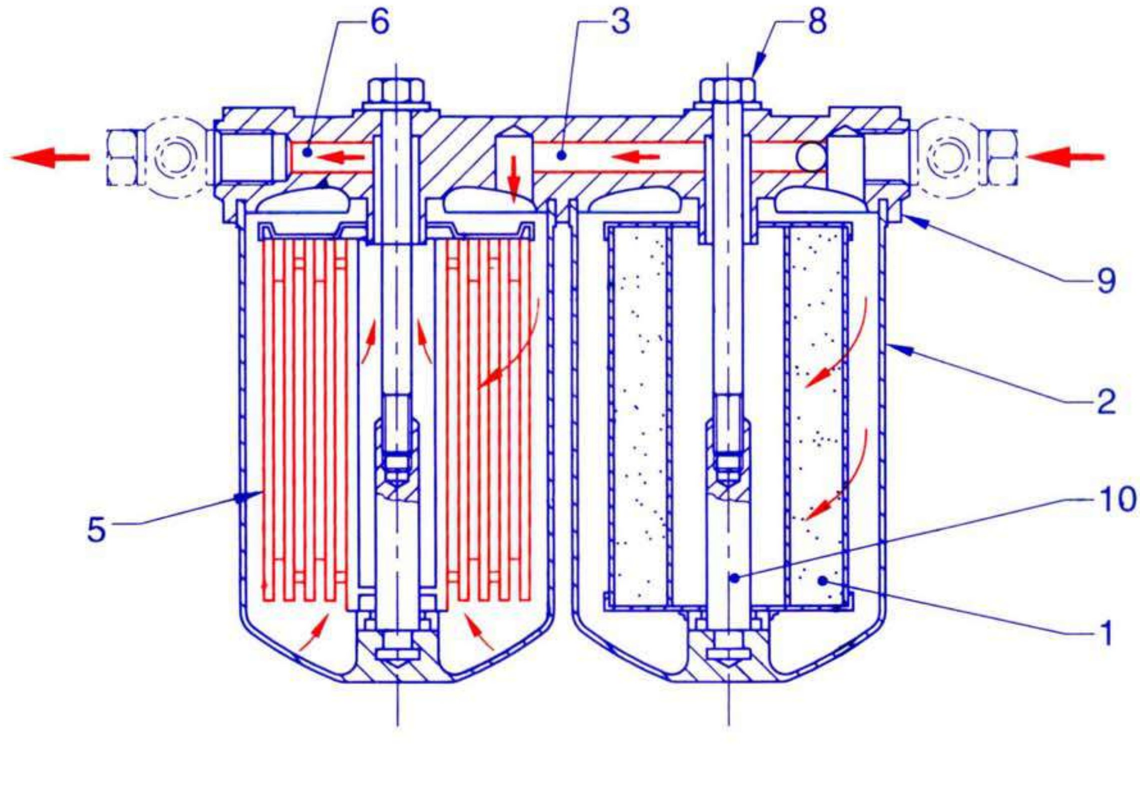

TYPES OF STUBAXLE MOUNTINGS (CONVENTIONAL FRONT AXLE)

ELLIOT TYPE

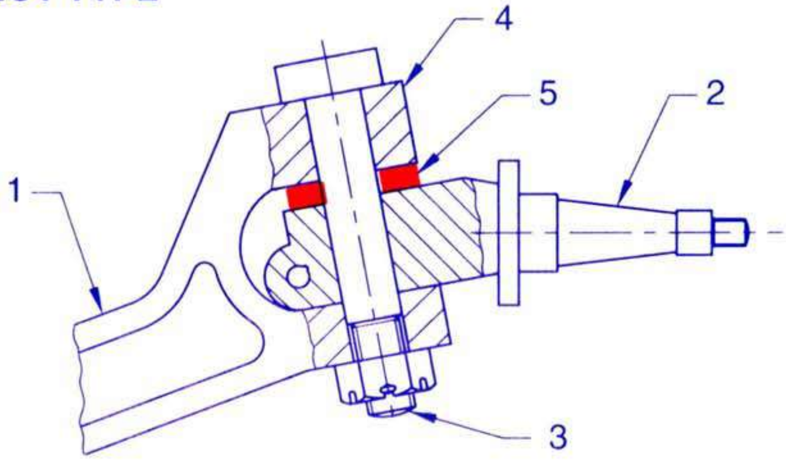

REVERSED ELLIOT TYPE

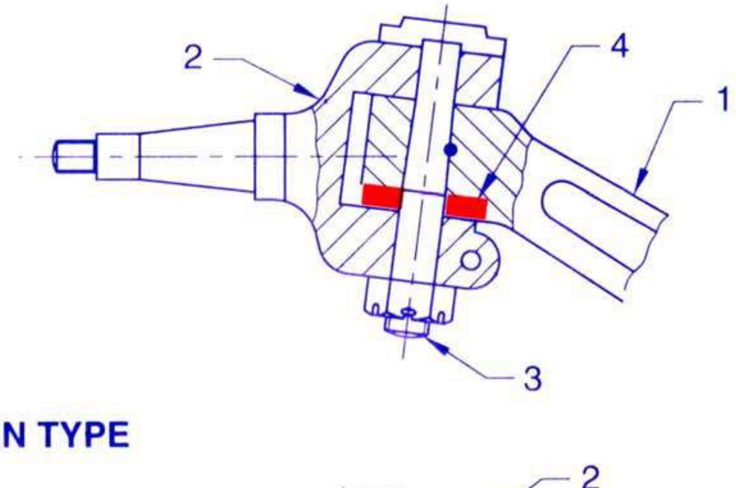

LEMOIN TYPE

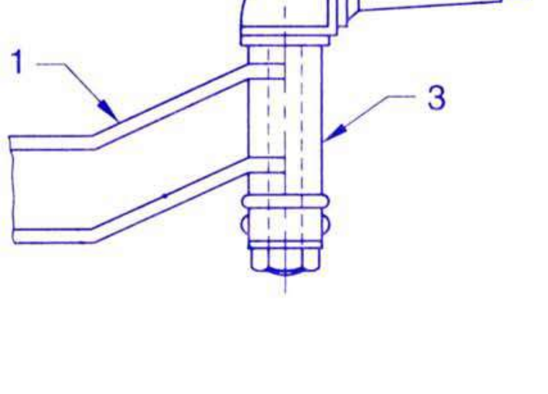

CENTRAL INSTRUCTIONAL MEDIA INSTITUTE, CHENNAI
INDO - GERMAN PROJECT
TR 10 06 05 01 99

STEERING LINKAGES LIGHT MOTOR VEHICLE

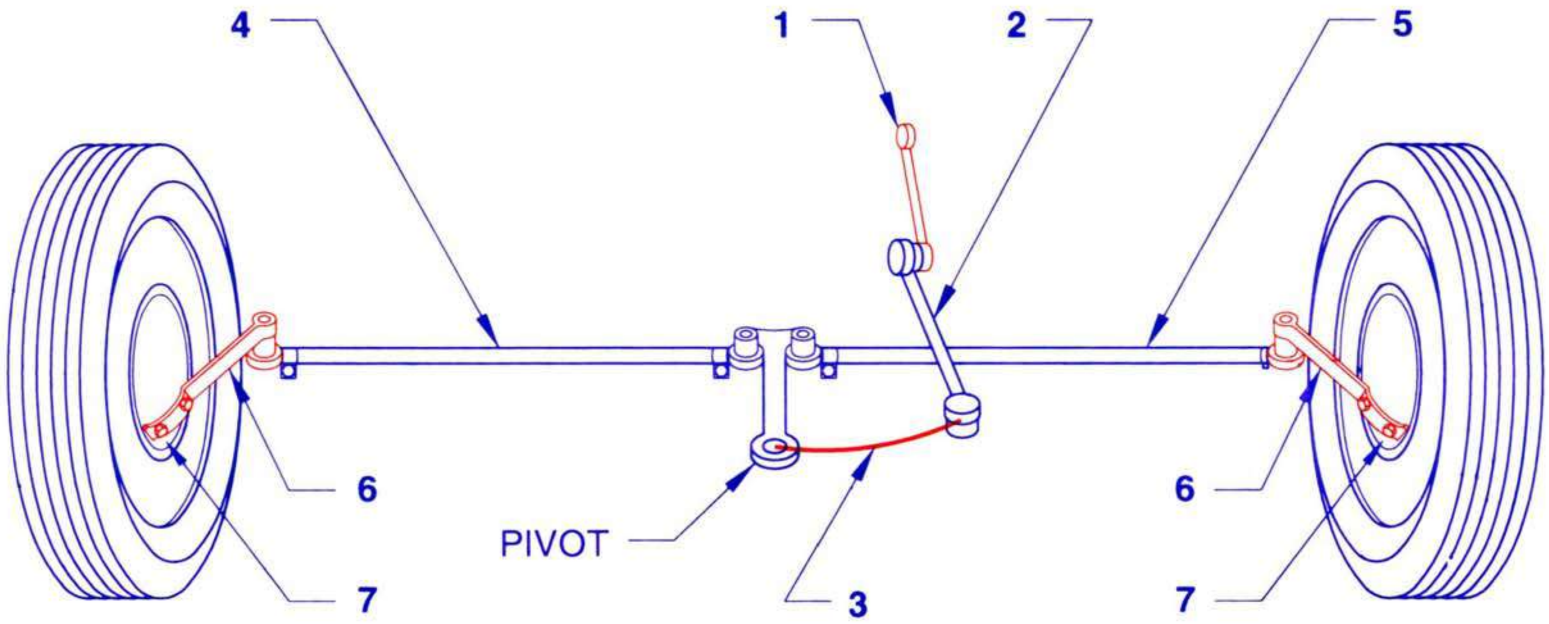

STEERING GEAR BOX RACK & PINION STEERING

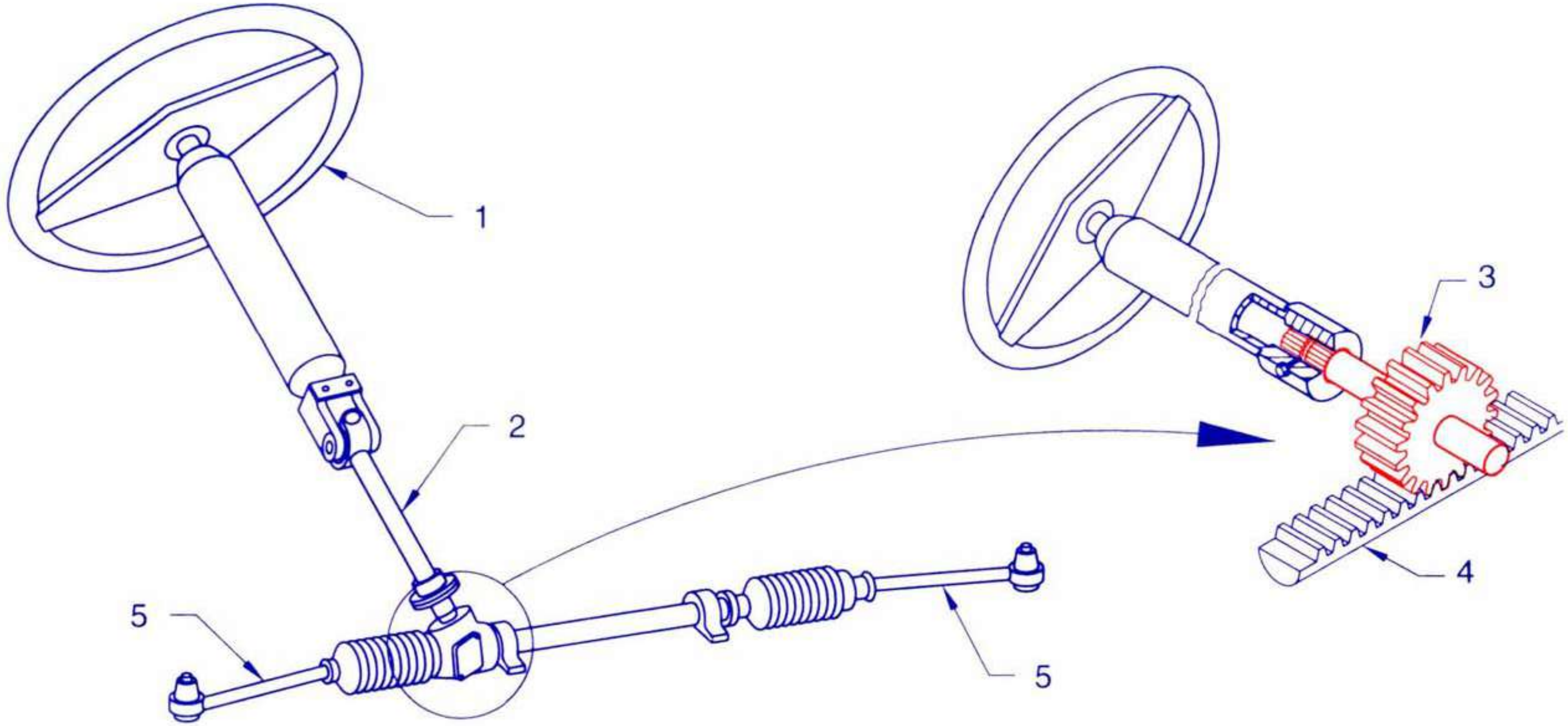

TANDEM MASTER CYLINDER AND ITS FUNCTION

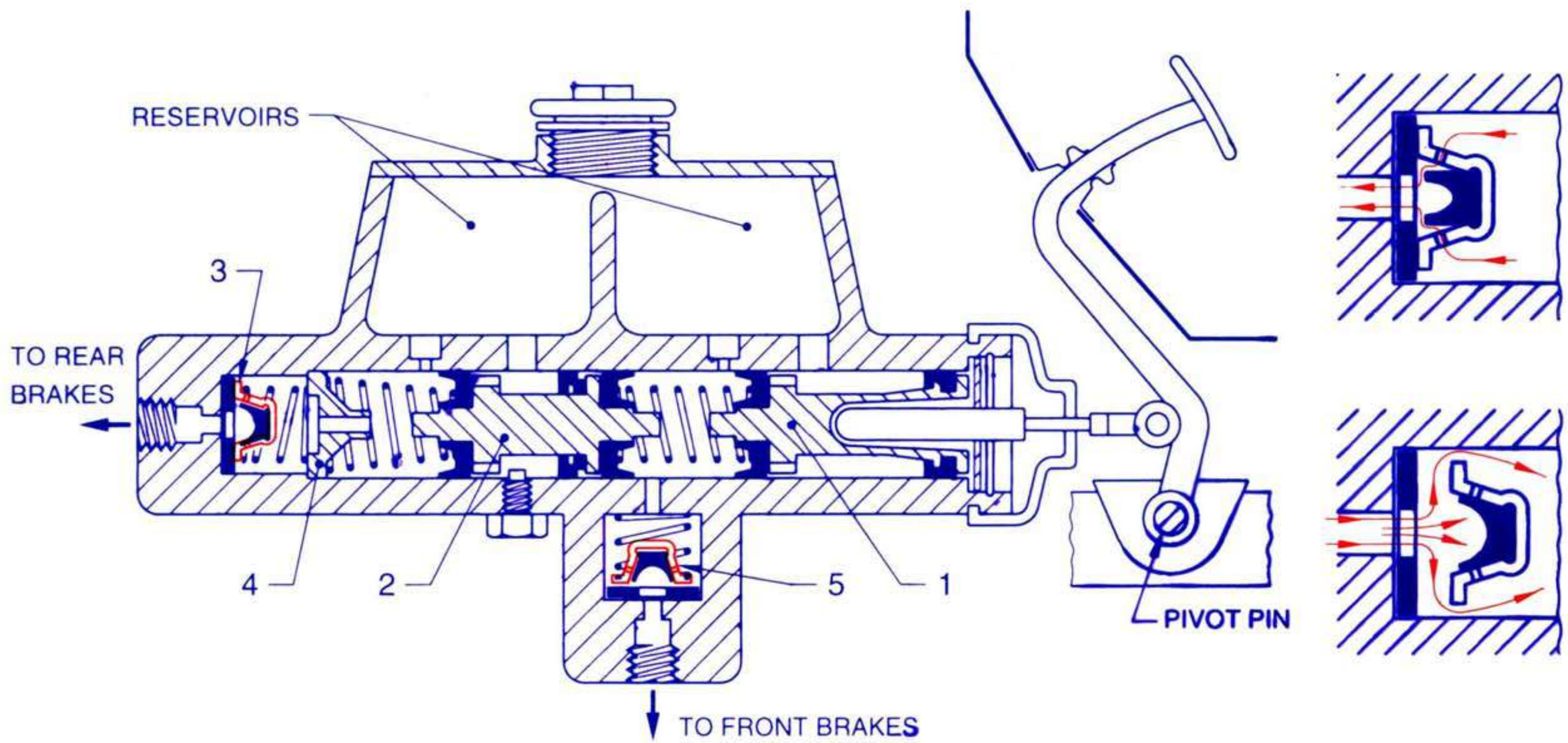

CENTRAL INSTRUCTIONAL MEDIA INSTITUTE, CHENNAI
INDO - GERMAN PROJECT

TR 10 04 01 01 99

DIFFERENTIAL AND ITS ACTION

(a)

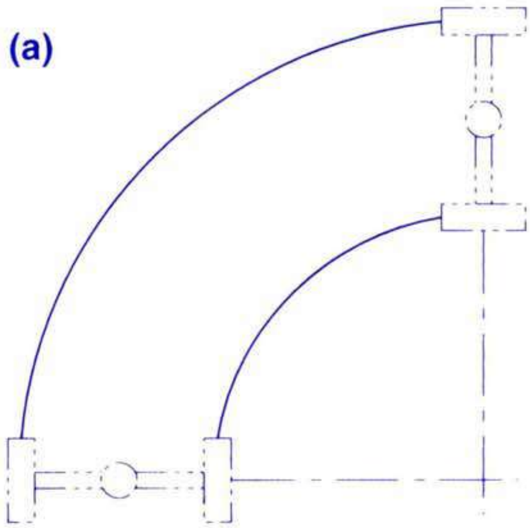

(b)

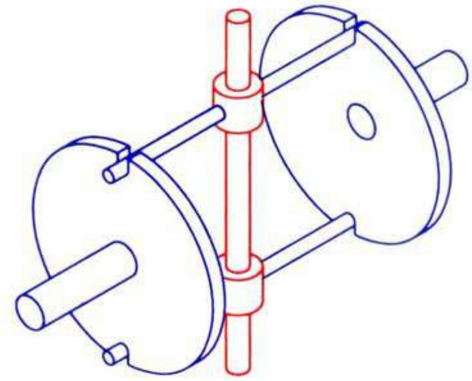

(c)

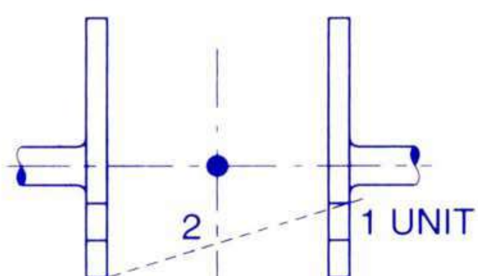

(d)

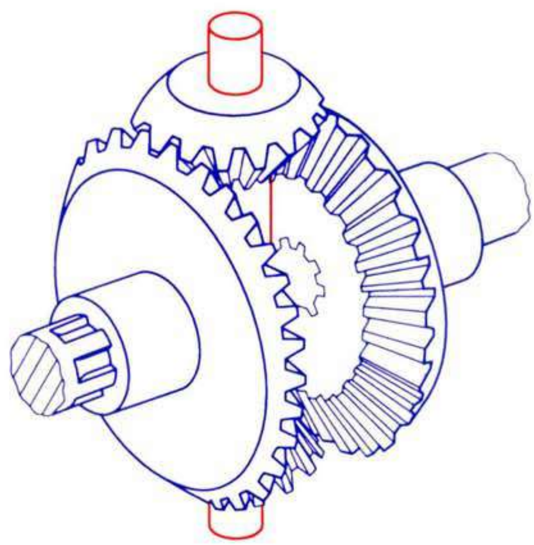

CENTRAL INSTRUCTIONAL MEDIA INSTITUTE, CHENNAI
INDO - GERMAN PROJECT
TR 10 11 09 01 99

WHEEL CYLINDER AND ITS ACTION

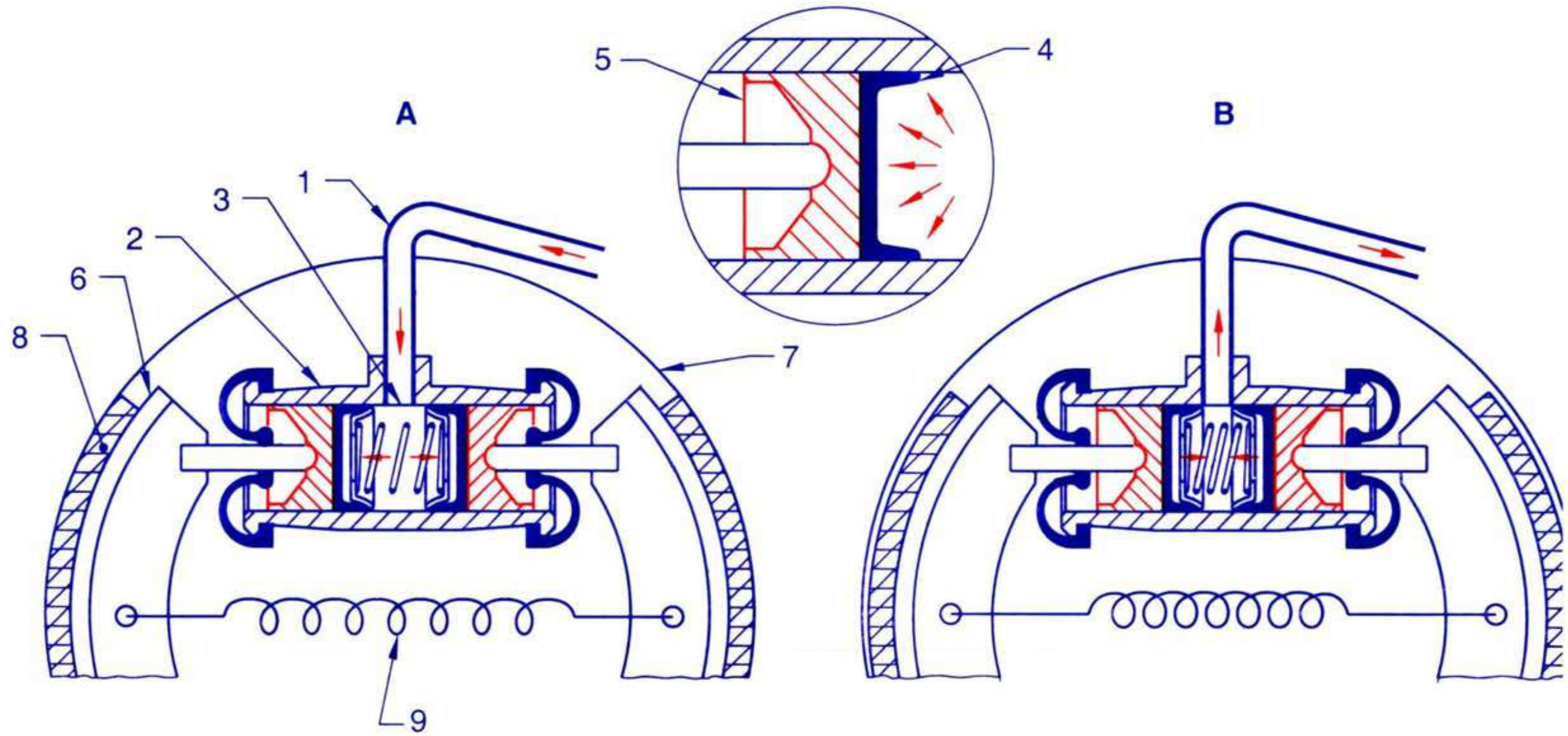

IGNITION SYSTEM

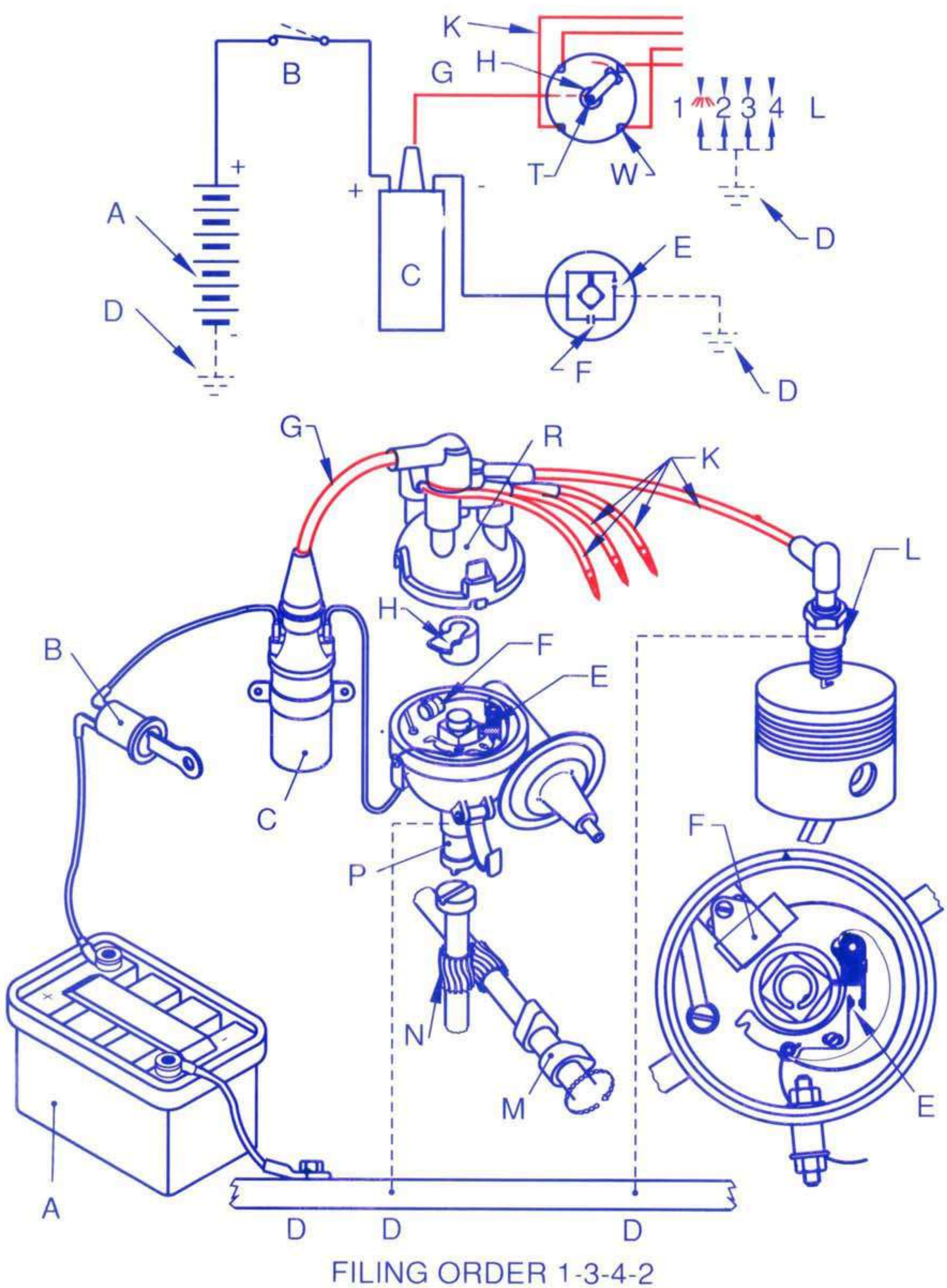

FILING ORDER 1-3-4-2

LUBRICATION SYSTEM
(FULL FLOW AND BY PASS FLOW OIL FILTER)

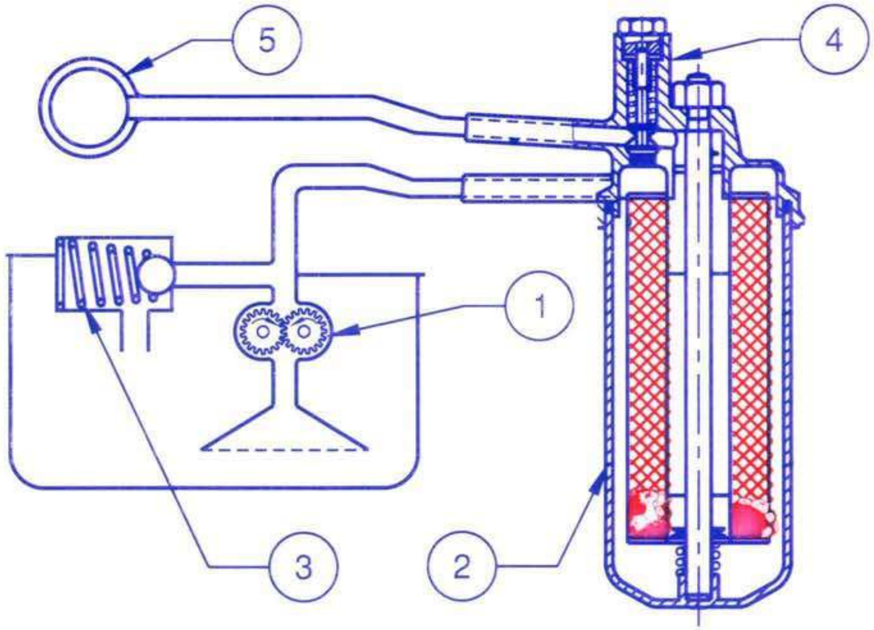

TYPE

FUNCTION

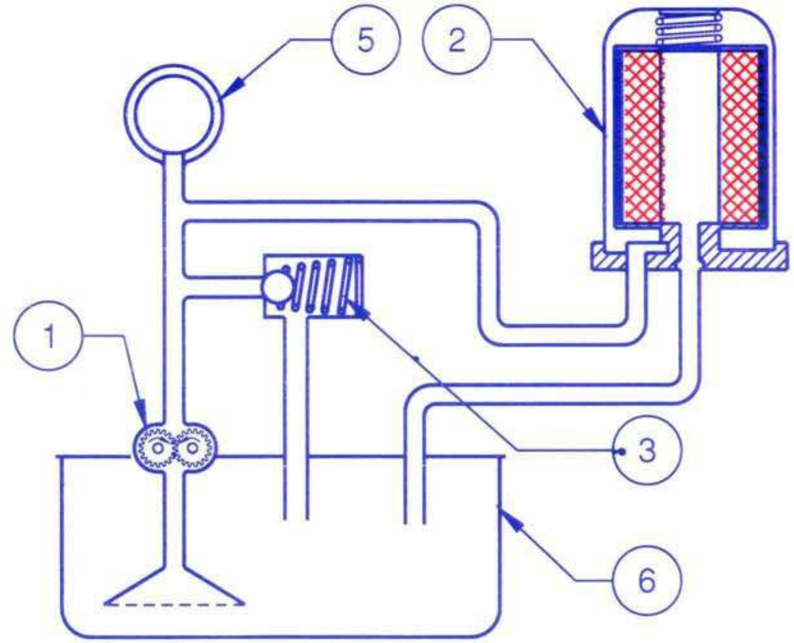

TYPE

FUNCTION

TR 10 01 06 01 95

LUBRICATION SYSTEM (ENGINE OIL CIRCULATION)

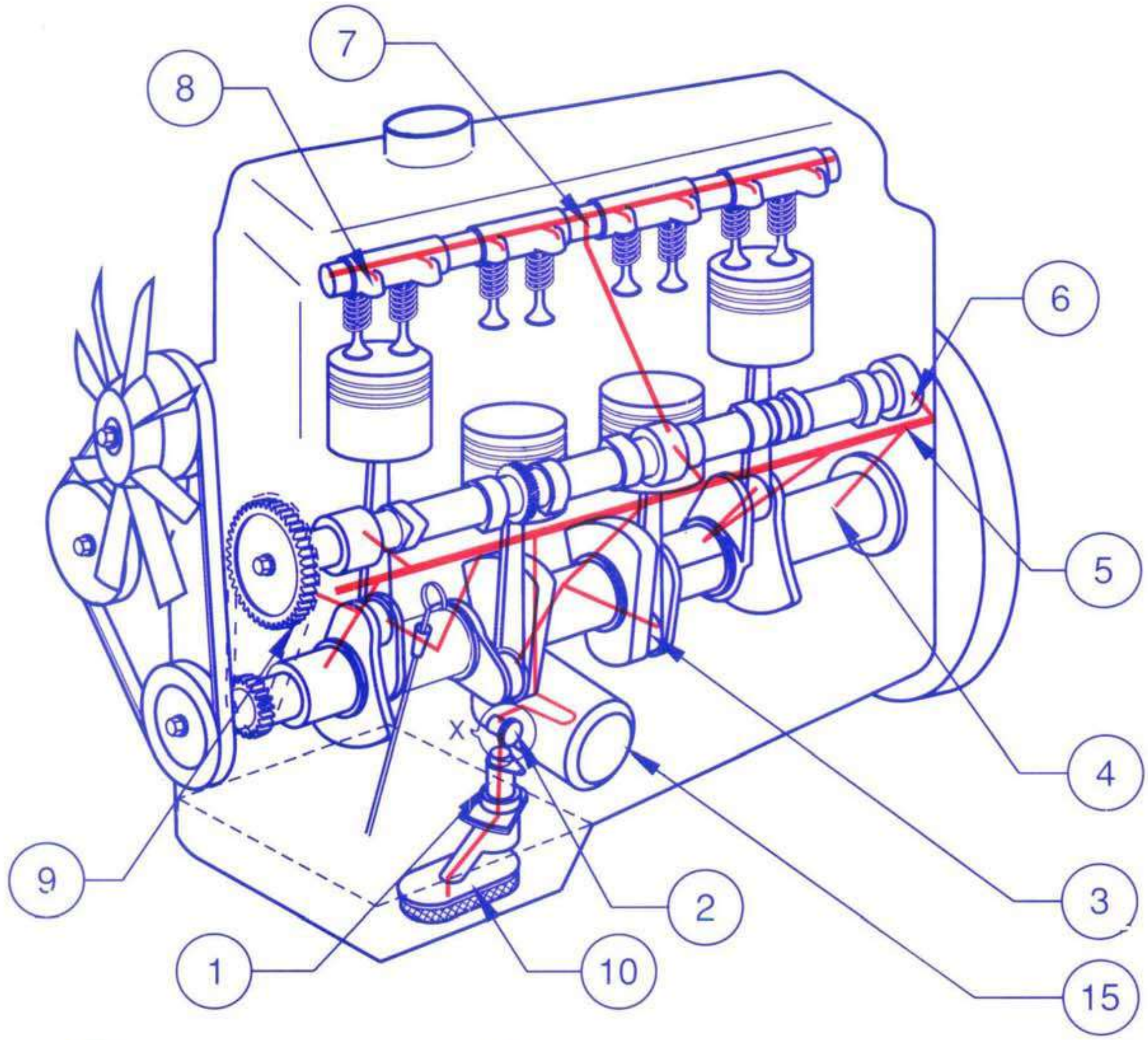

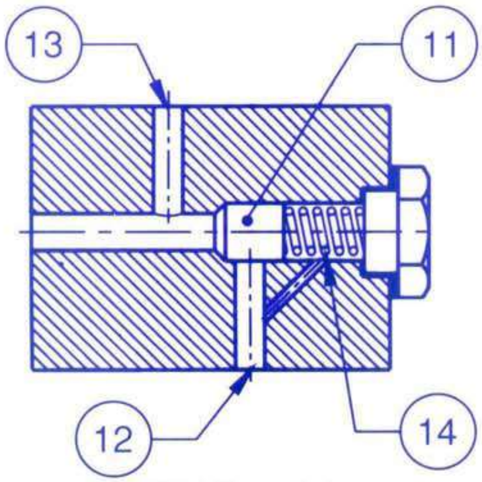

DETAIL - X-A

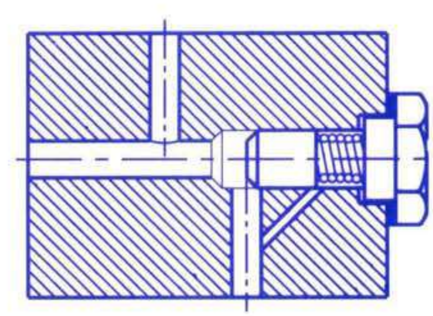

DETAIL - X-B

PUMP AND ECONOSTAT CIRCUIT

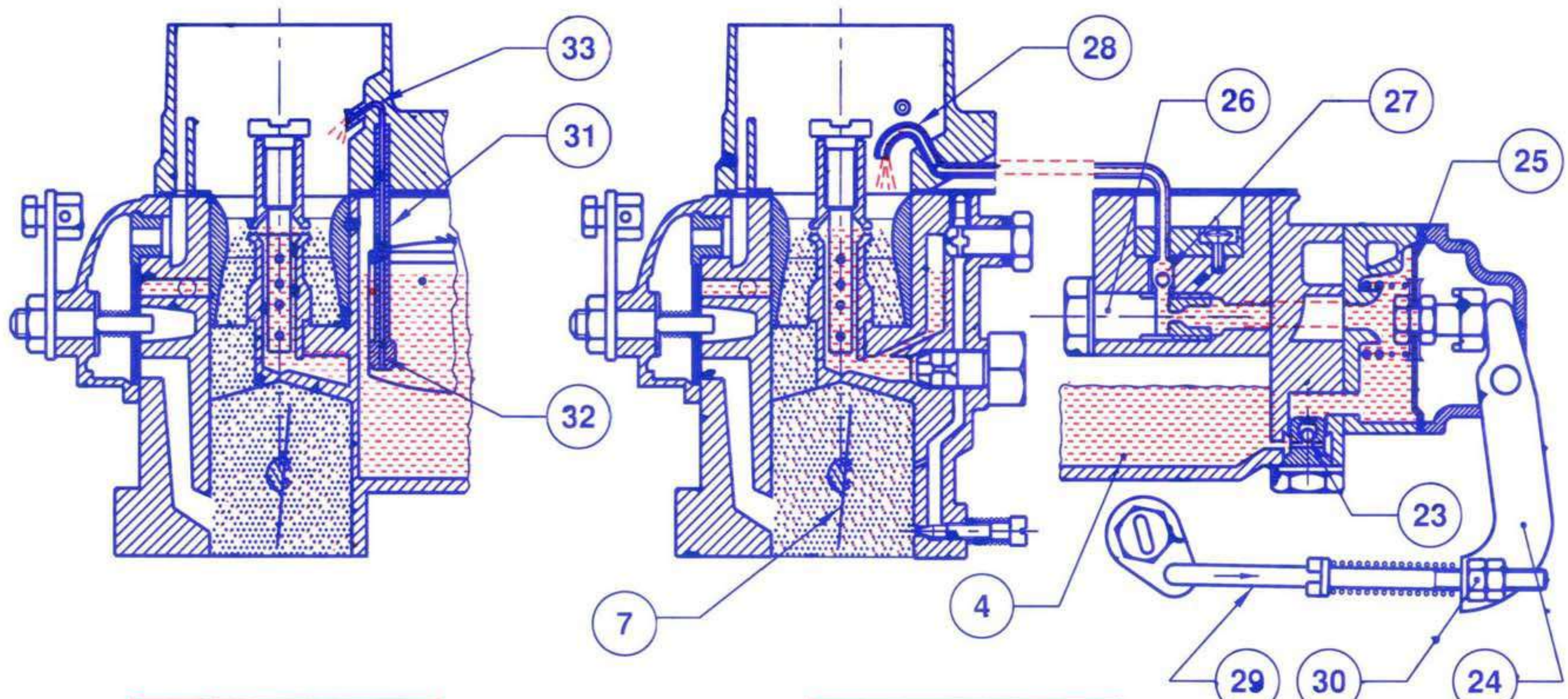

F CIRCUIT

E CIRCUIT

IDLING AND MAIN CIRCUIT

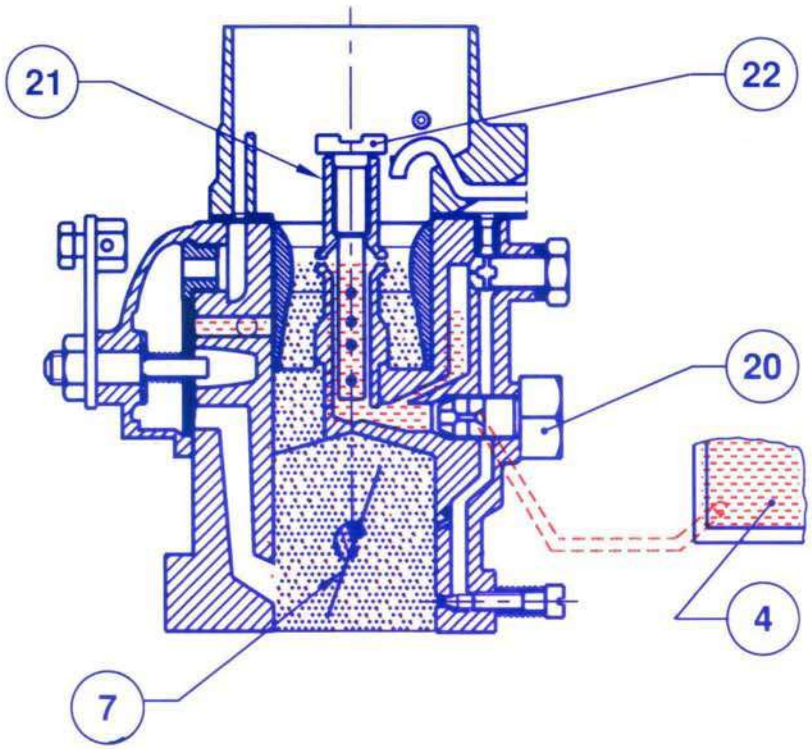

D CIRCUIT

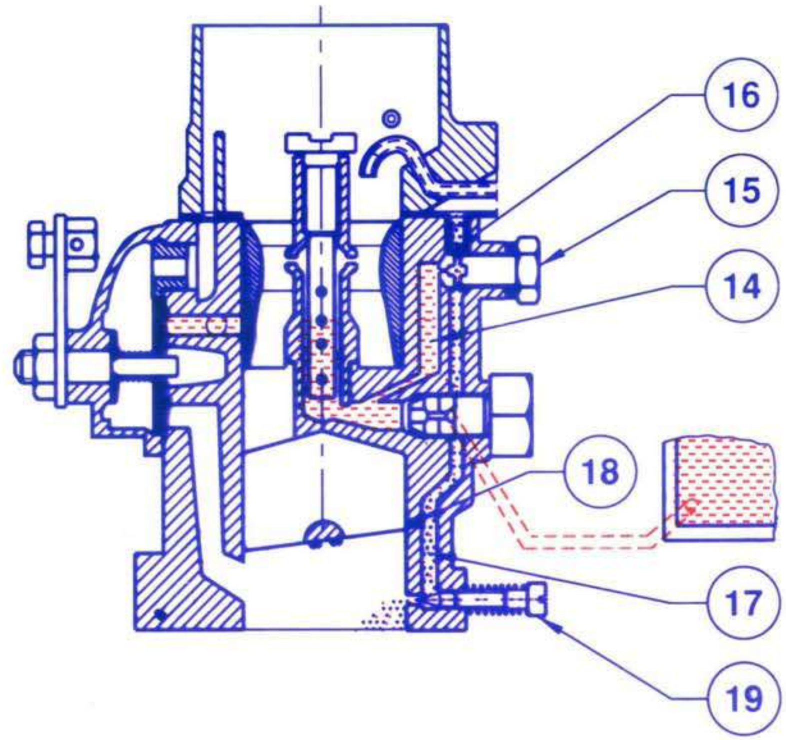

C CIRCUIT

FLOAT AND STARTING CIRCUIT

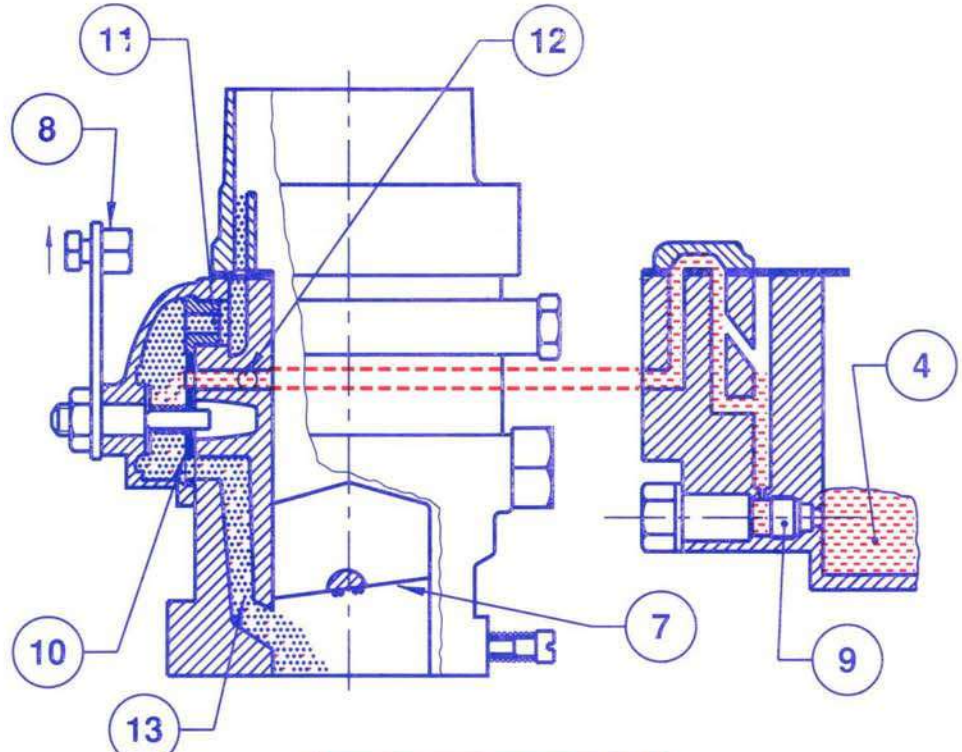

B CIRCUIT

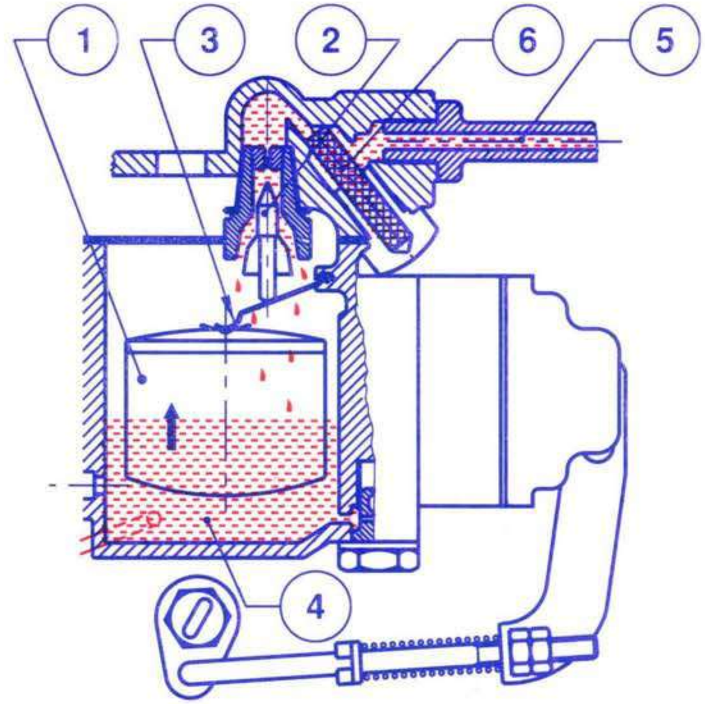

A CIRCUIT

TR 10 01 02 02 95

CARBURETTOR FUNCTION

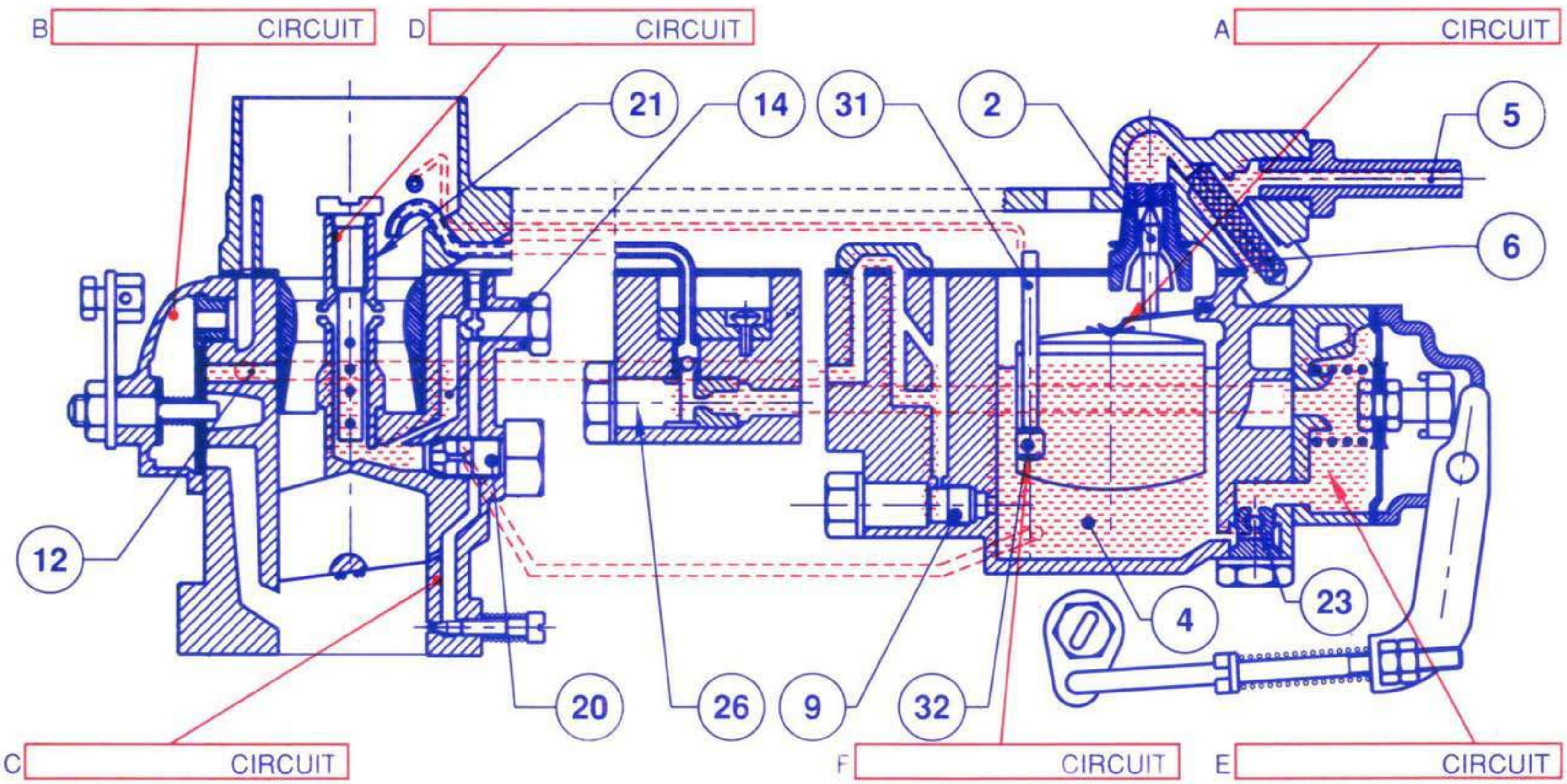

FUEL PUMP OPERATION

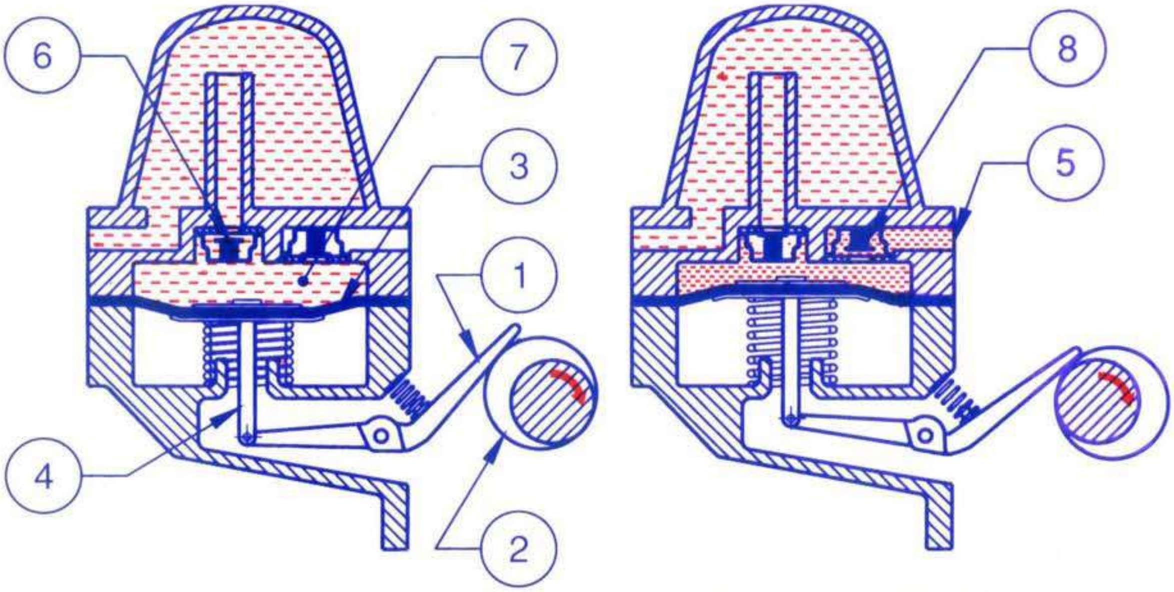

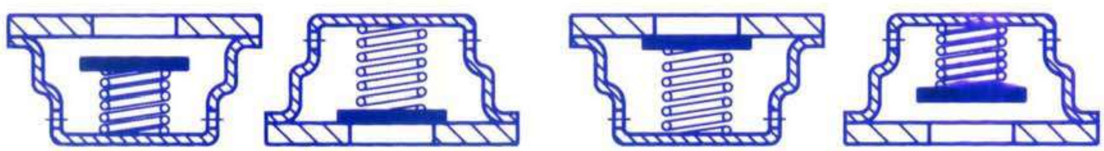

DETAILS: 6 8 6 8

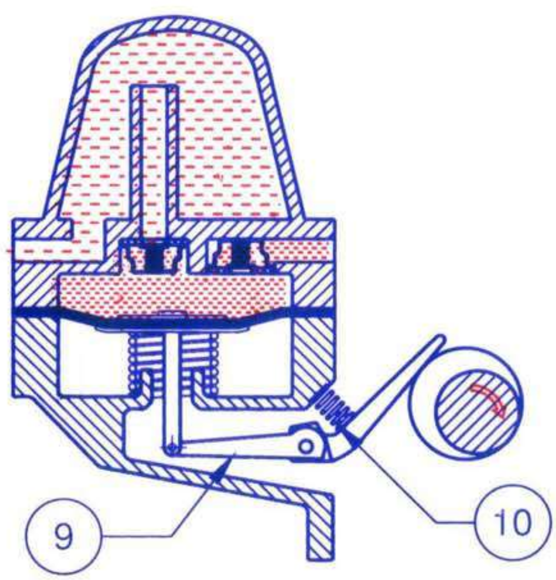

COOLING SYSTEM

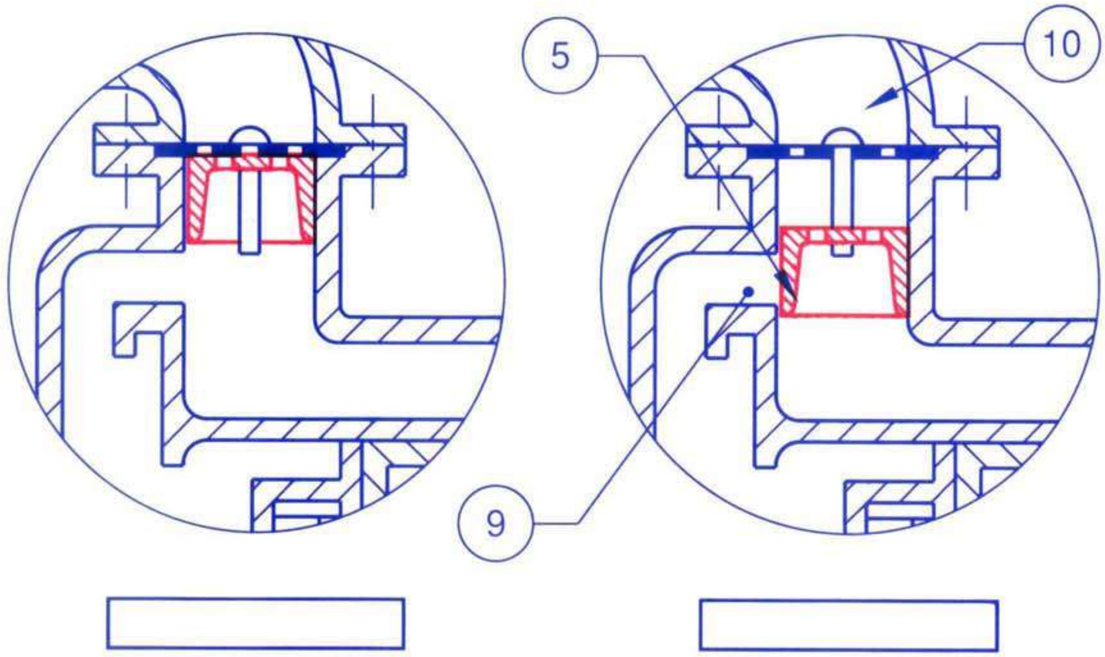

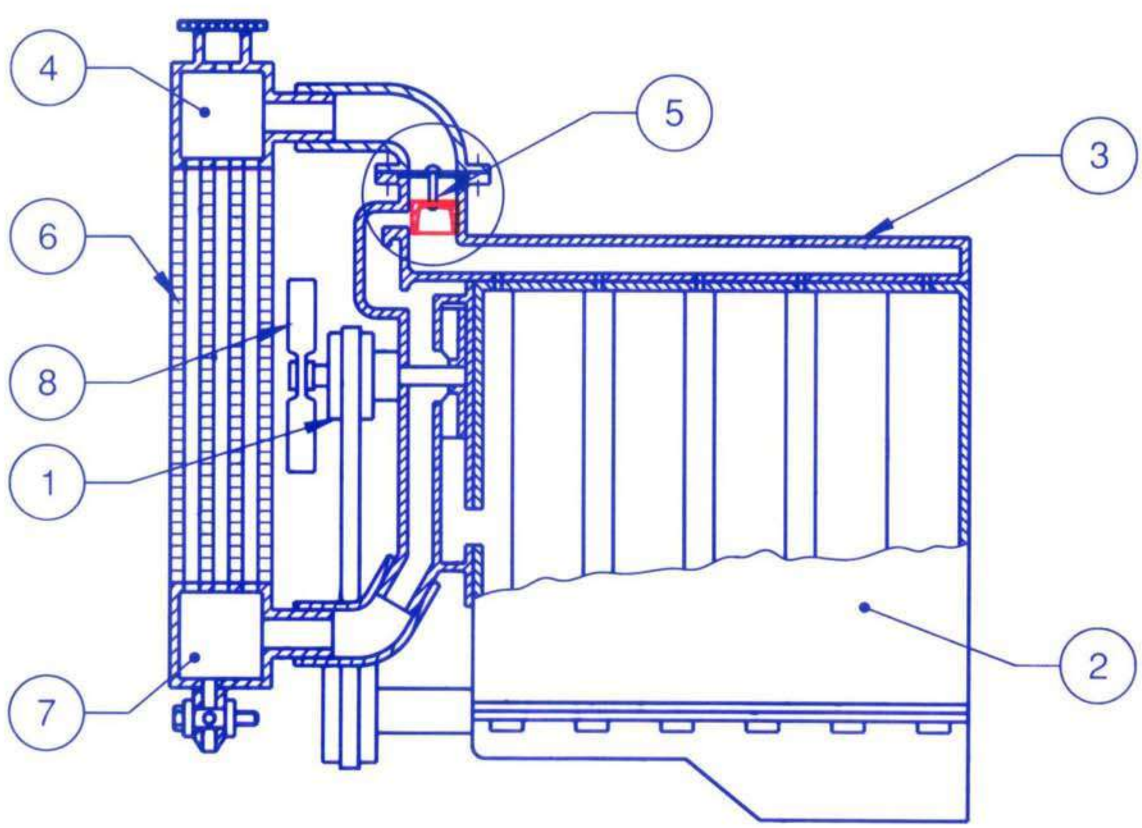

TR 10 01 01 05 95

OVERHEAD VALVE OPERATIING MECHANISM

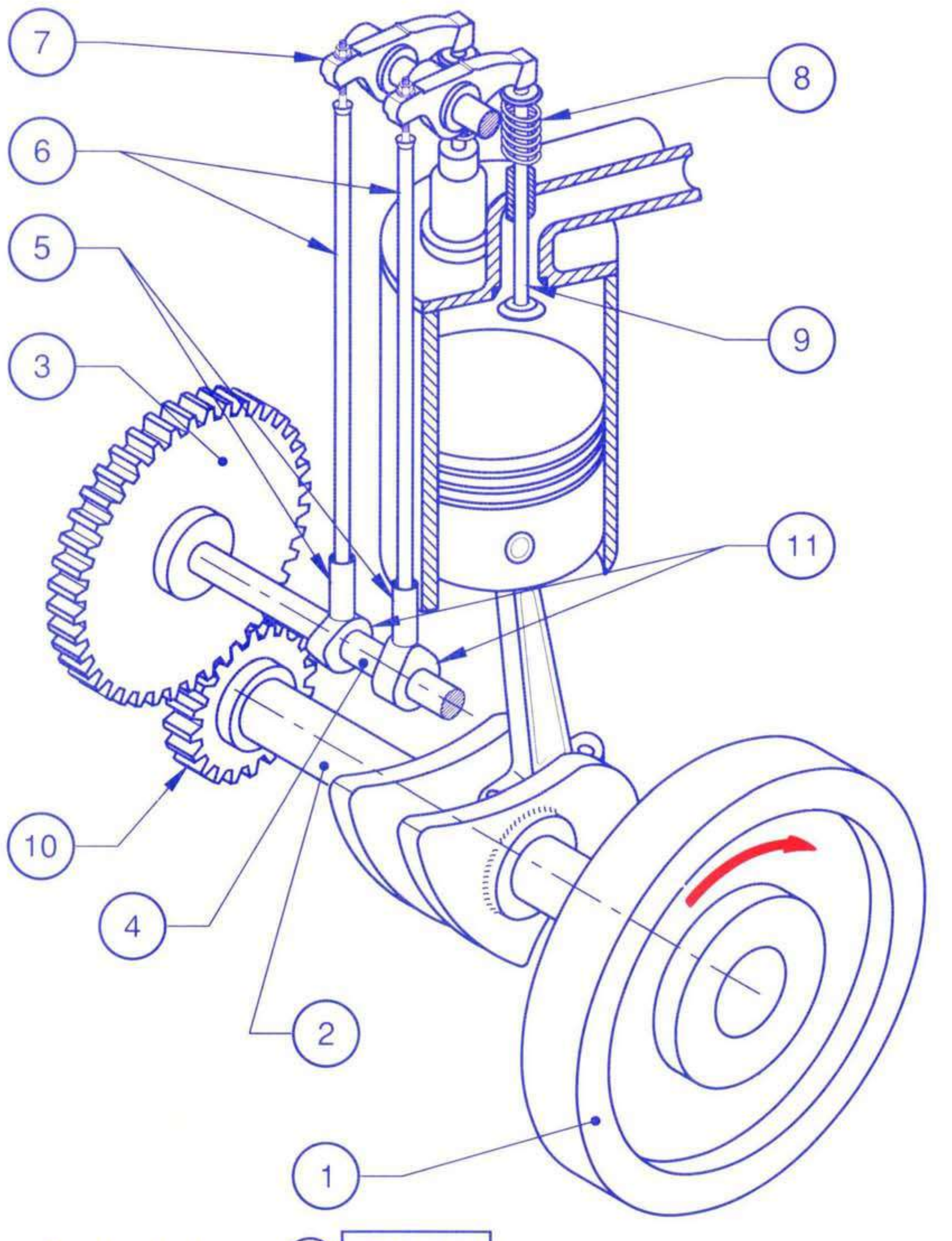

Crank shaft gear (10)	21teeth
Cam shaft gear (3)	

BORE DIAL GAUGE-CHECKING OVALITY AND TAPER

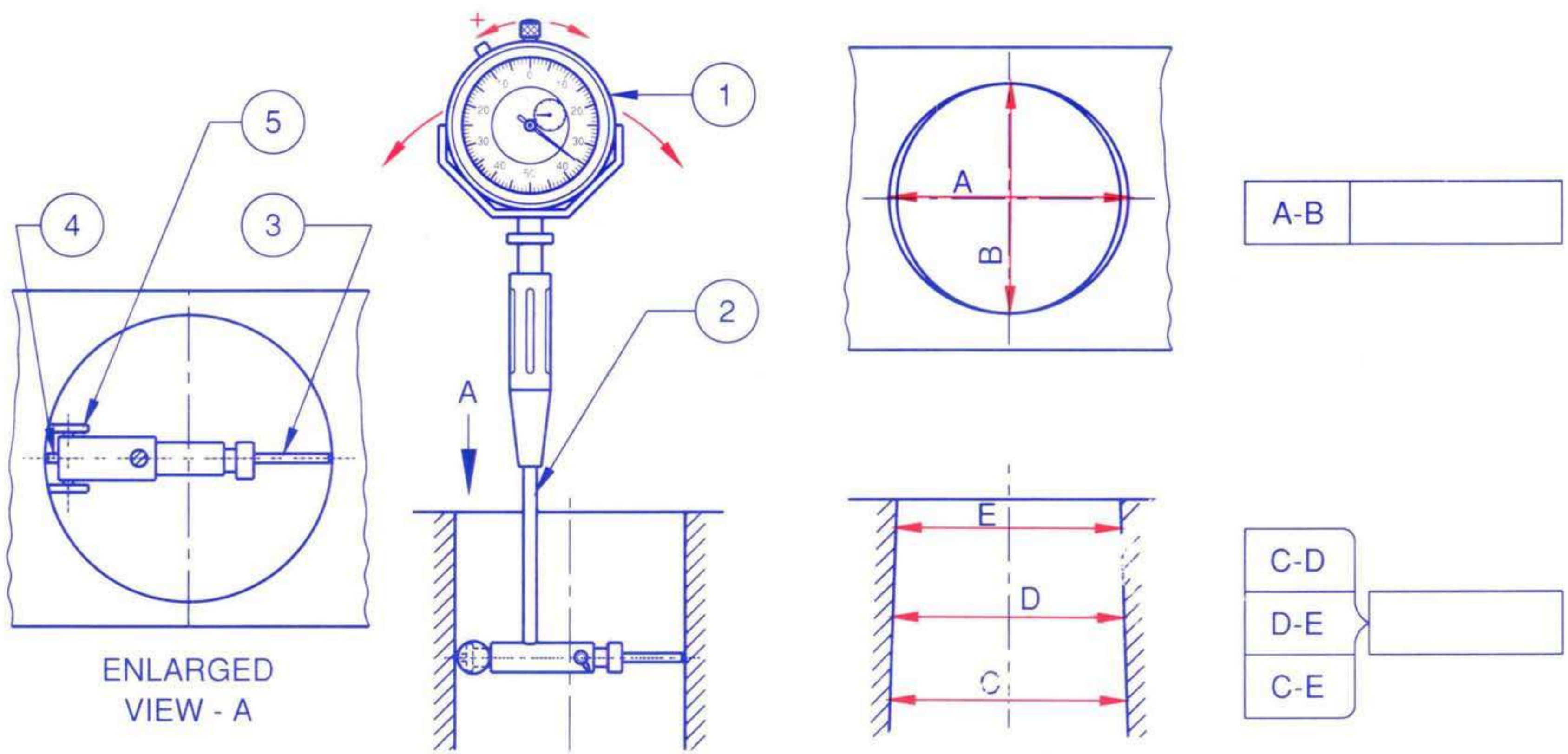

CIMI CENTRAL INSTRUCTIONAL MEDIA INSTITUTE, MADRAS
AN INDO-GERMAN PROJECT

TWO STROKE CYCLE OPERATION (PETROL)

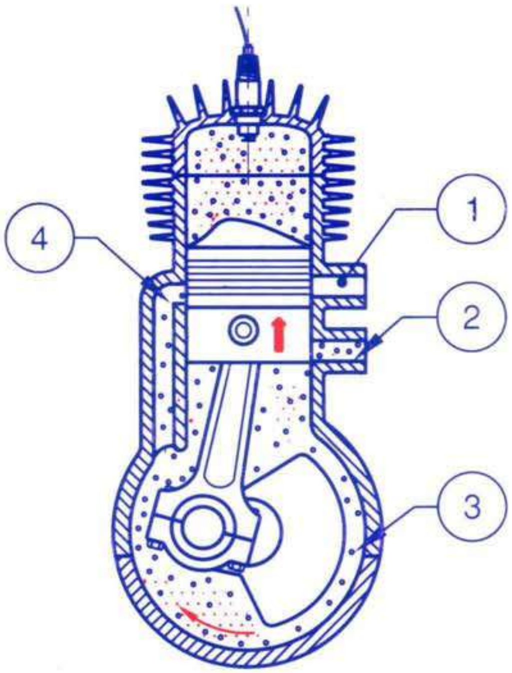

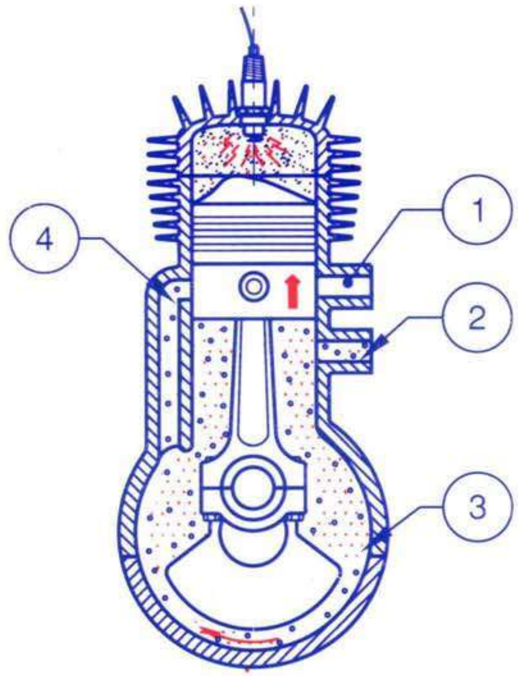

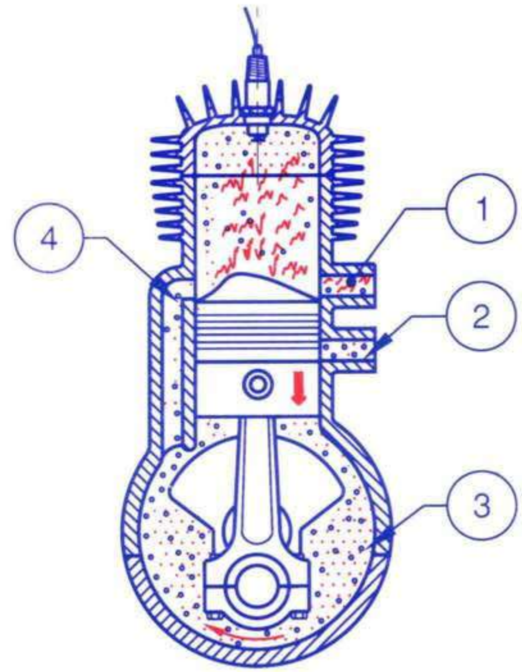

STROKE ACTION A

B

C

TR 10 01 01 04 95

FOUR STROKE CYCLE OPERATION (DIESEL)

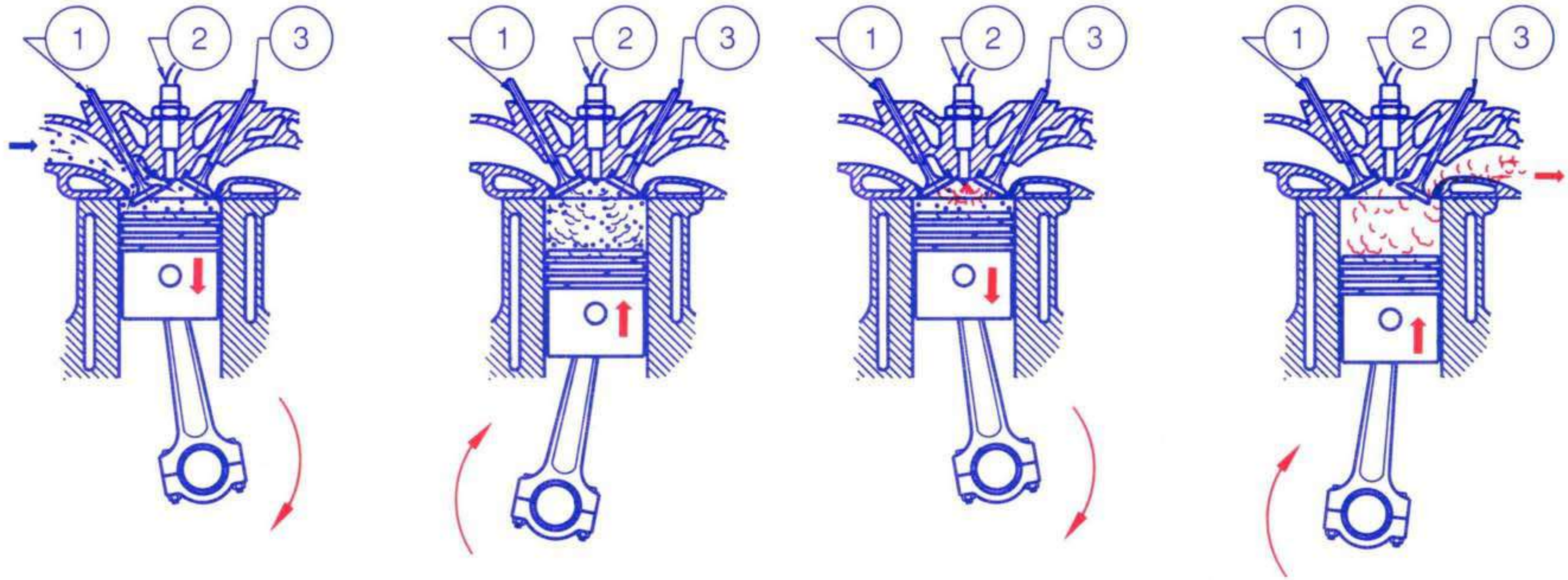

STROKE ACTION	A	B	C	D

CIMI CENTRAL INSTRUCTIONAL MEDIA INSTITUTE, MADRAS
AN INDO-GERMAN PROJECT

TR 10 01 01 03 95

gtz

CIMI CENTRAL INSTRUCTIONAL MEDIA INSTITUTE, MADRAS
AN INDO-GERMAN PROJECT

TR 10 01 01 02 95

FOUR STROKE CYCLE OPERATION (PETROL)

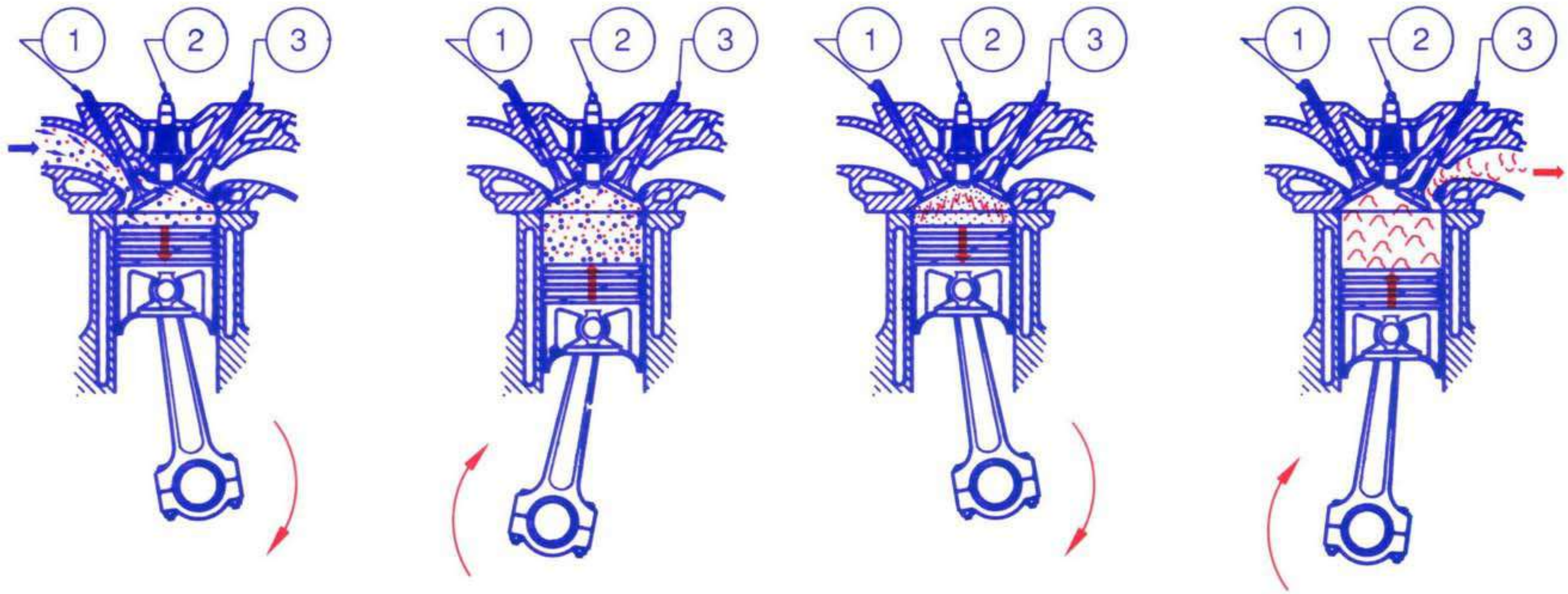

STROKE ACTION	A	B	C	D

RELATIONSHIP BETWEEN PISTON AND FLYWHEEL MOVEMENT

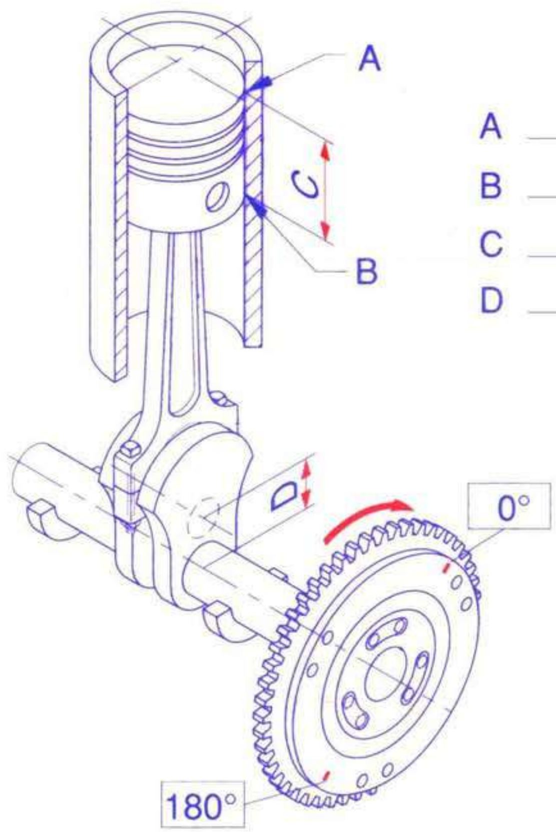

A ______________________

B ______________________

C ______________________

D ______________________

Dx2 =

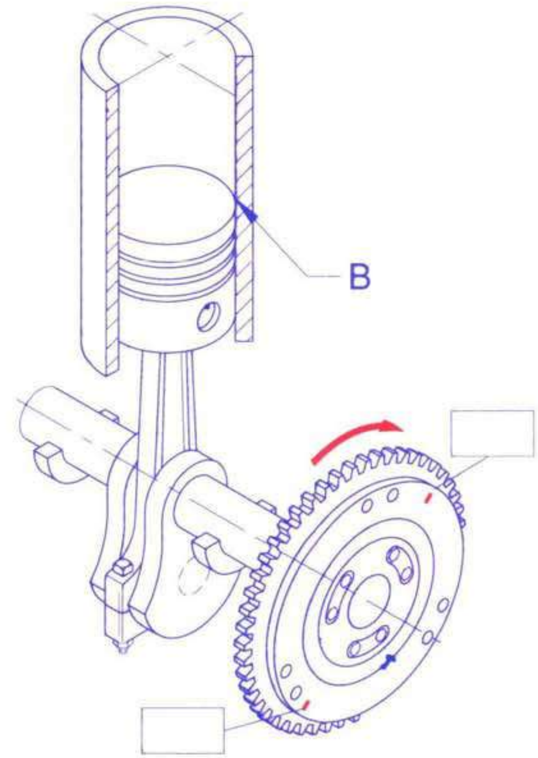

TR 10 11 02 01 95

HYDRAULIC BRAKES

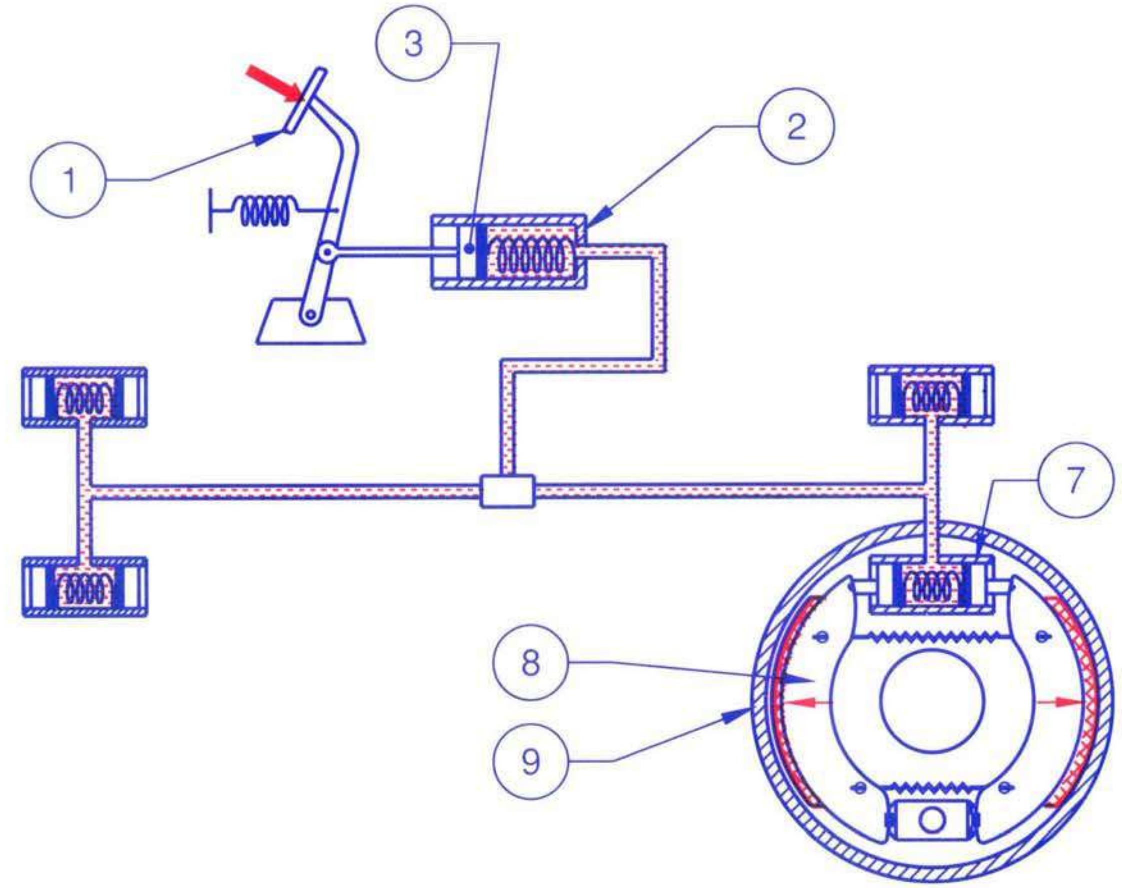

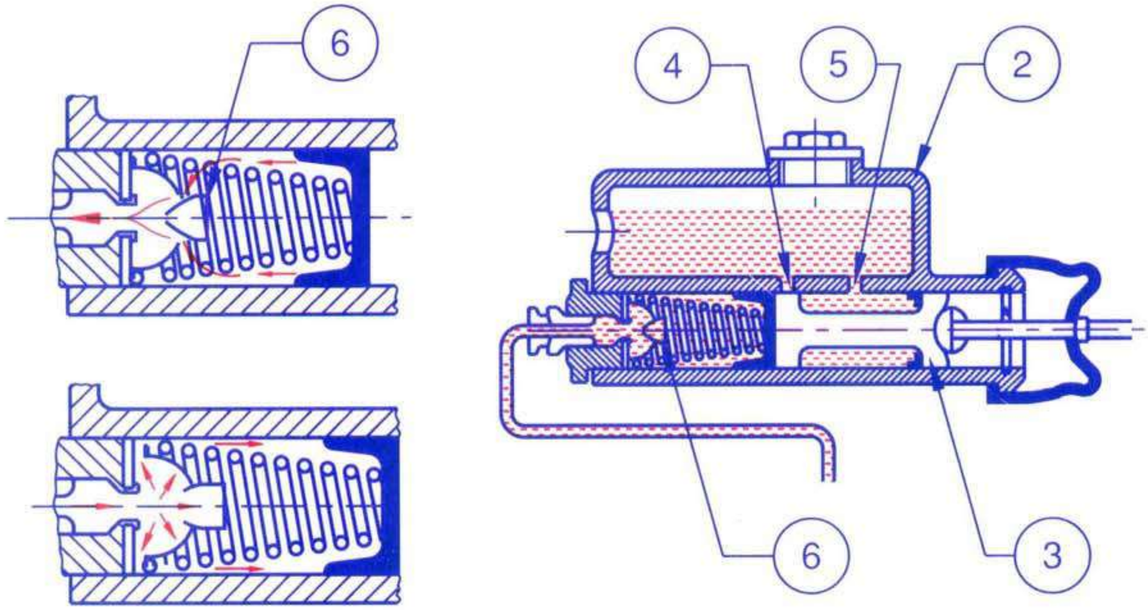

CIMI CENTRAL INSTRUCTIONAL MEDIA INSTITUTE, MADRAS
AN INDO-GERMAN PROJECT
TR 10 05 02 01 95

FUNCTION OF UNIVERSAL JOINT AND SLIP JOINT

CONDITION A ____________________

B ____________________

C ____________________

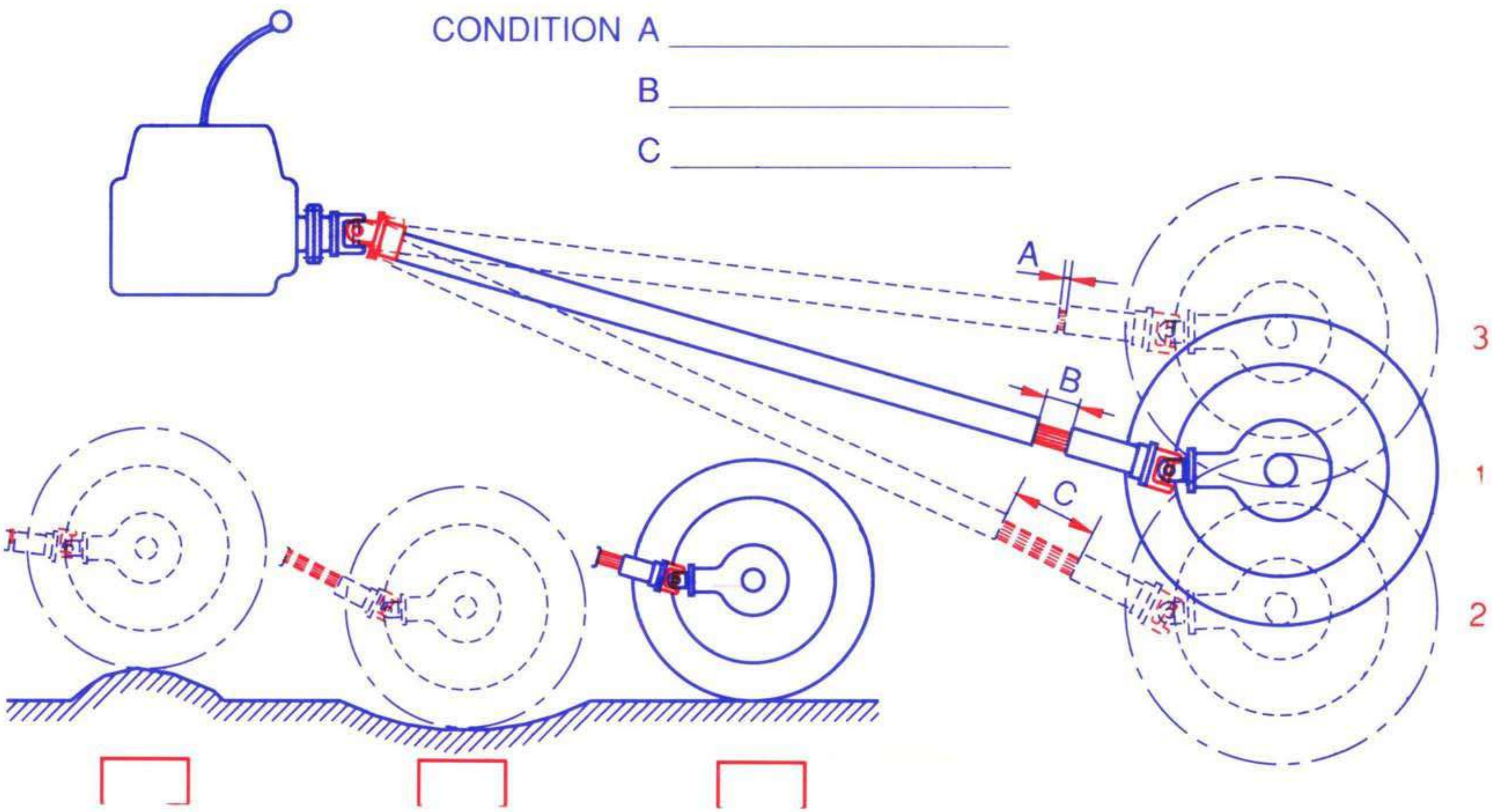

CIMI CENTRAL INSTRUCTIONAL MEDIA INSTITUTE, MADRAS
AN INDO-GERMAN PROJECT

gtz

TR 10 03 07 01 95

TYPES OF GEARS

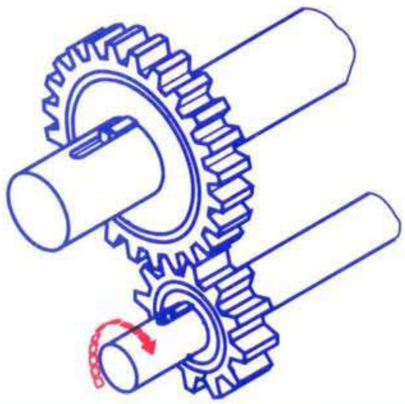

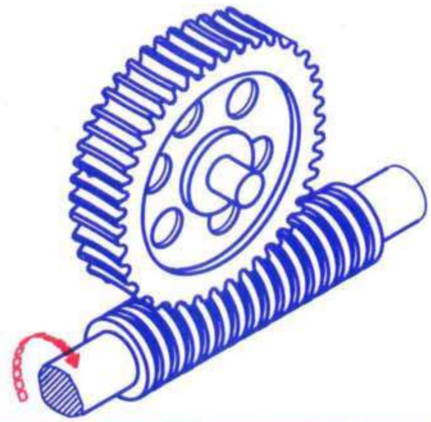

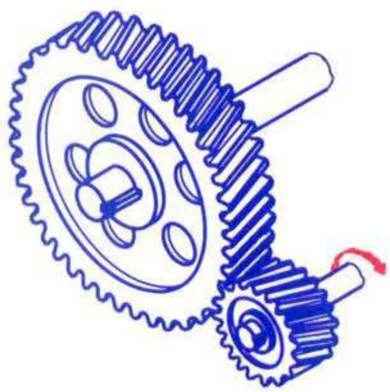

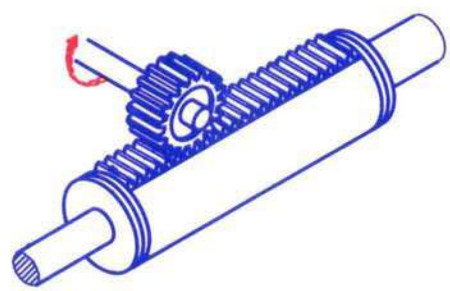

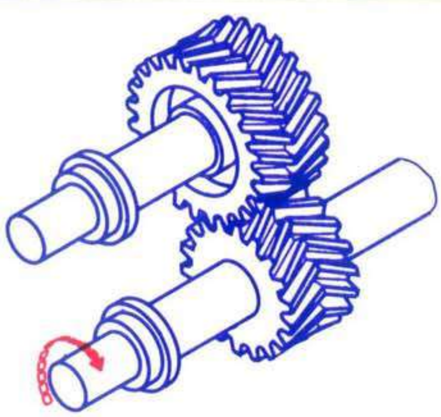

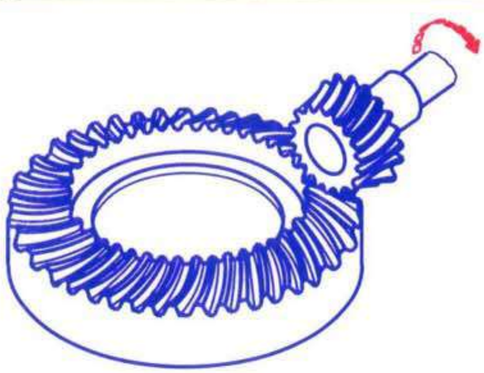

CLUTCH ACTUATION (HYDRAULIC)

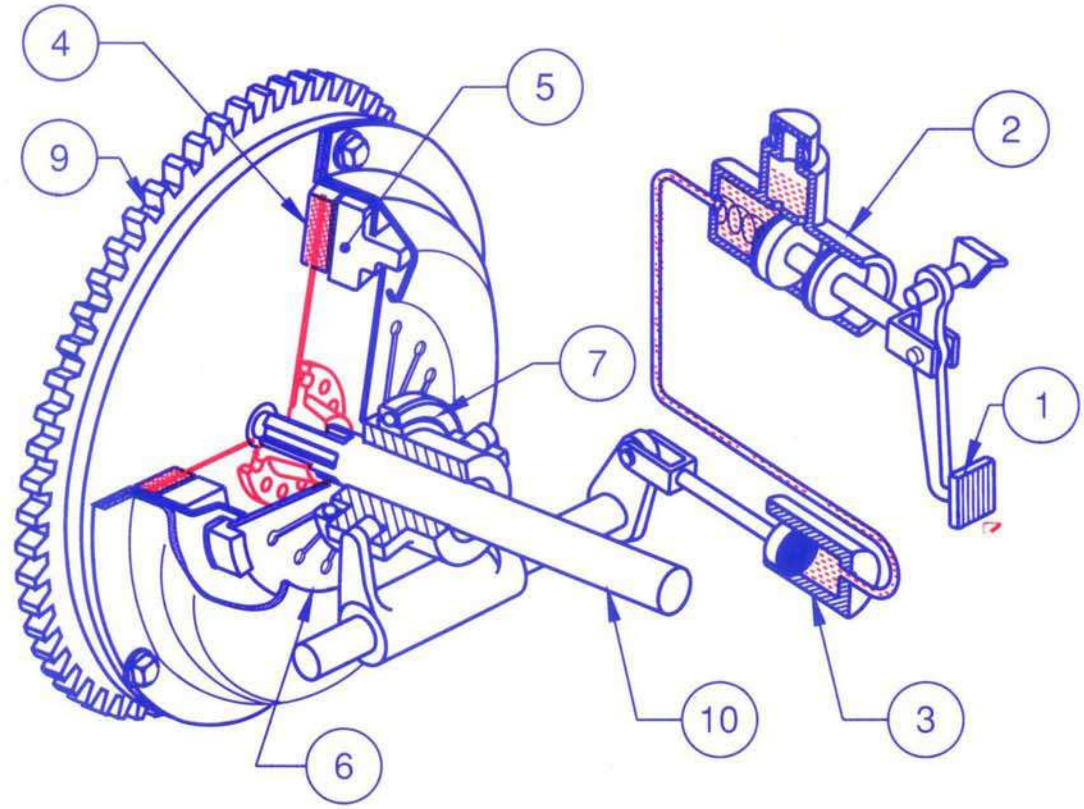

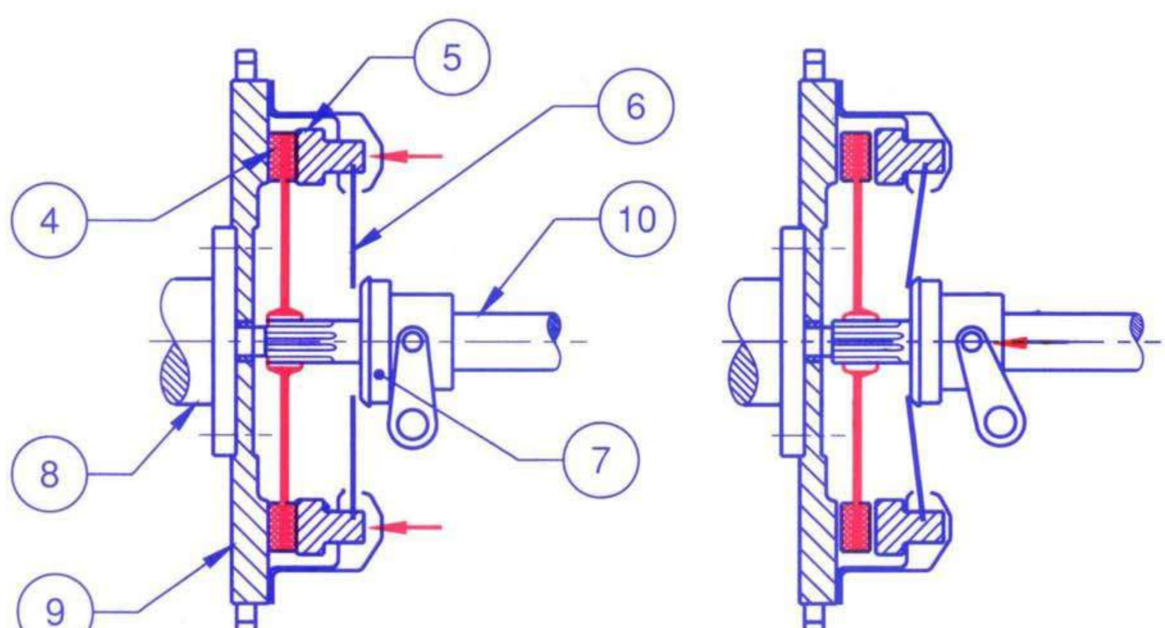

CIMI CENTRAL INSTRUCTIONAL MEDIA INSTITUTE, MADRAS
AN INDO-GERMAN PROJECT

TR 10 09 03 01 95

TYRE WEAR PATTERNS AND CAUSES

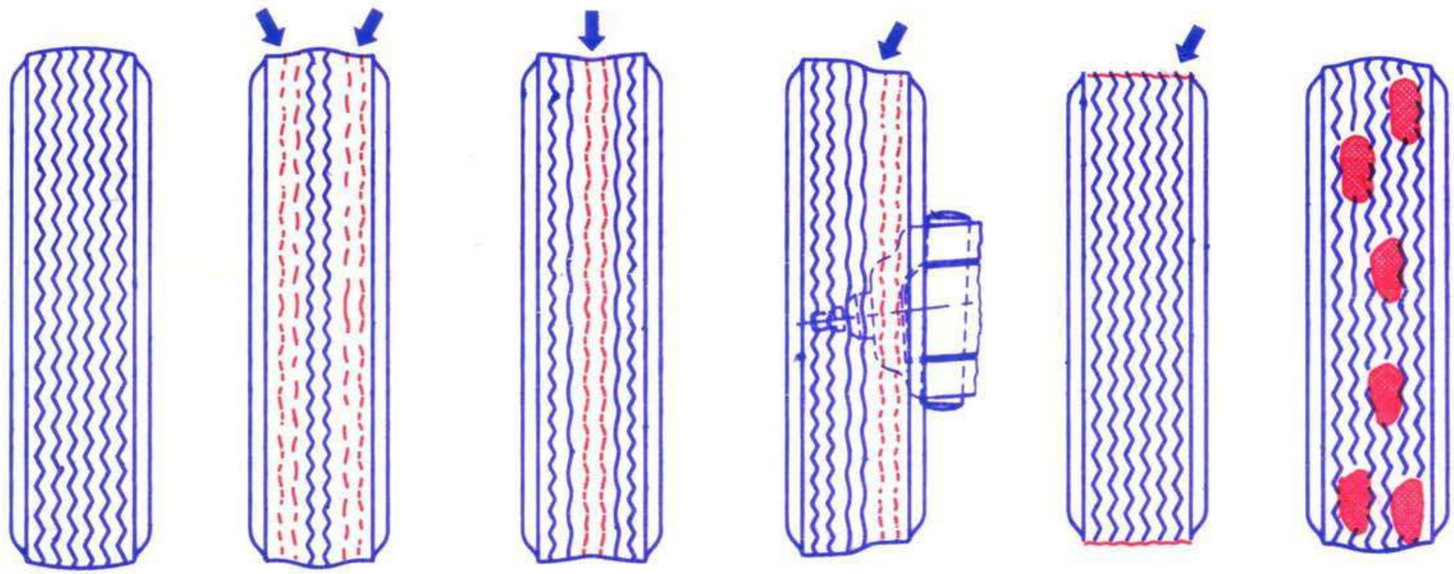

WEAR PATTERN ______ ______ ______ ______ ______ ______

CAUSE ______ ______ ______ ______ ______

CIMI CENTRAL INSTRUCTIONAL MEDIA INSTITUTE, MADRAS
AN INDO-GERMAN PROJECT

gtz

TR 10 09 04 01 95

WHEEL ALIGNMENT

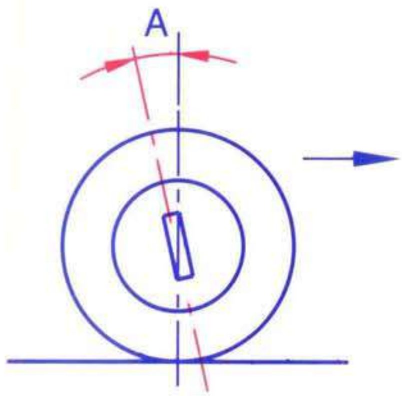

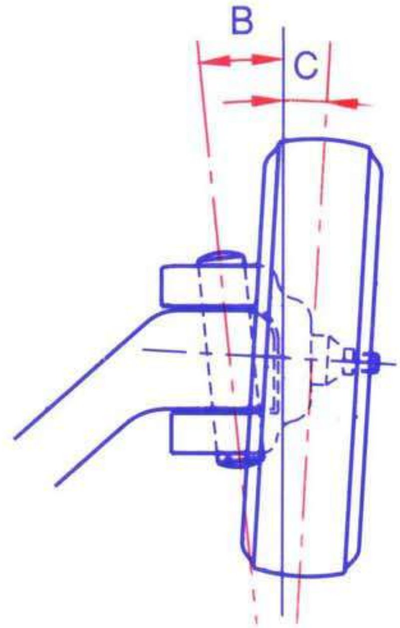

A ____________________

B ____________________

C ____________________

B+C= ____________________

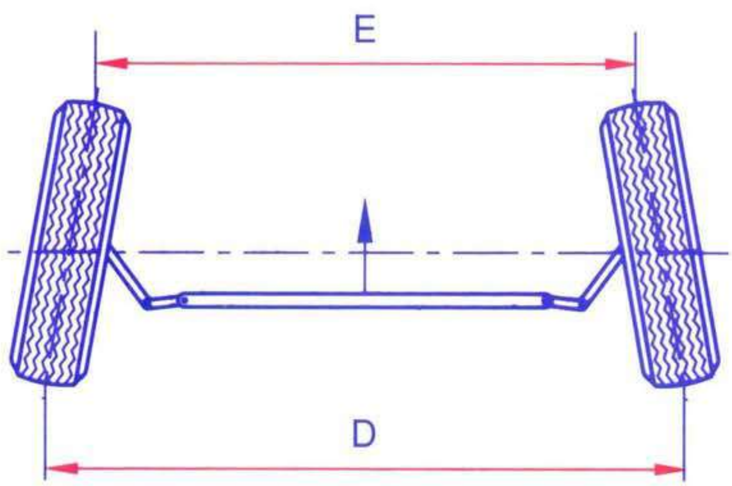

D-E= ____________________

MICROMETER READING

MICROMETER GRADUATIONS

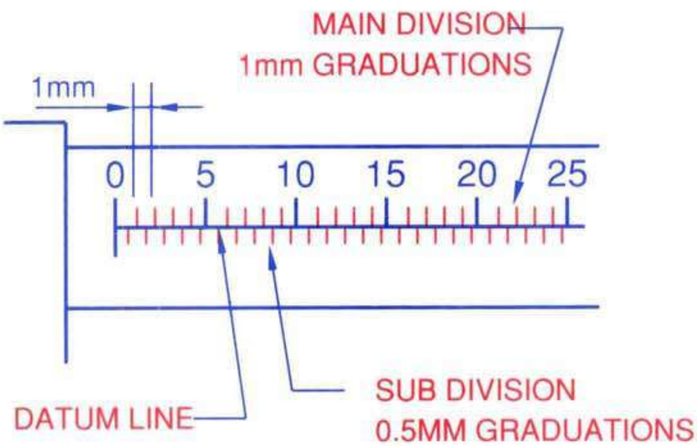

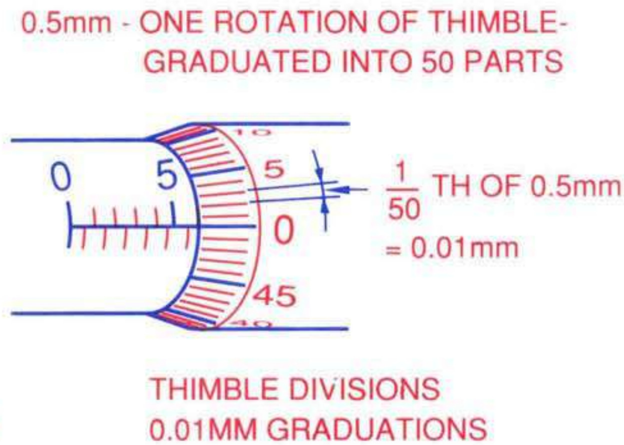

MICROMETER READING

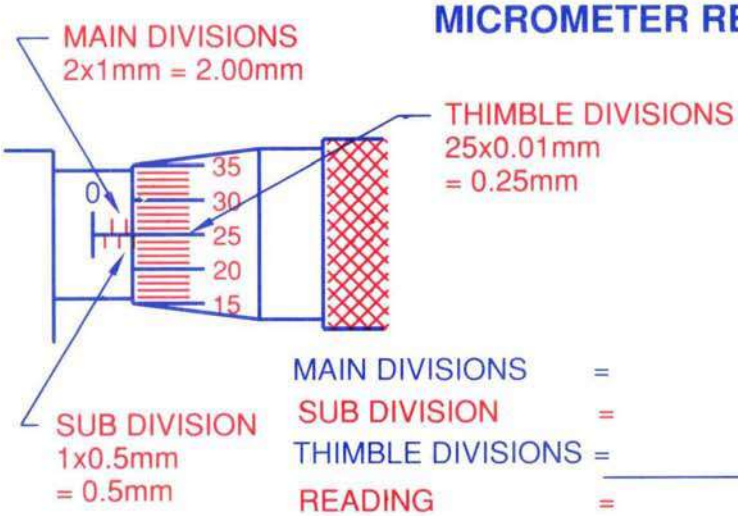

MAIN DIVISIONS =
SUB DIVISION =
THIMBLE DIVISIONS = ______
READING =

Example

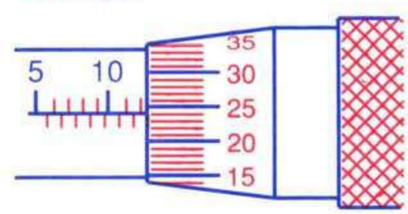

MAIN DIVISIONS =
SUB DIVISION =
THIMBLE DIVISIONS = ______
READING =

ASSIGNMENTS:-

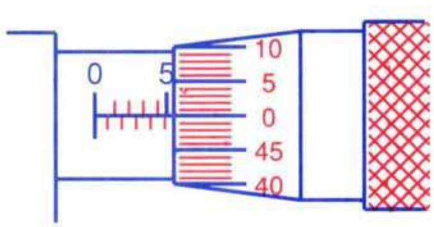

B READING [ ]

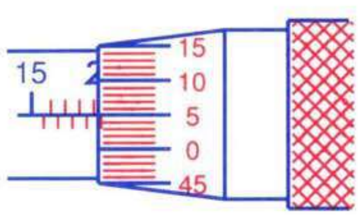

B READING [ ]

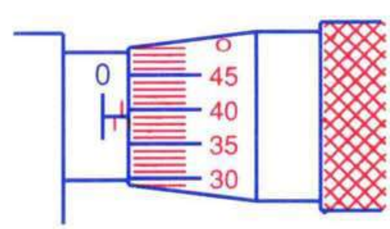

B READING [ ]

MICROMETER PARTS AND GRADUATIONS

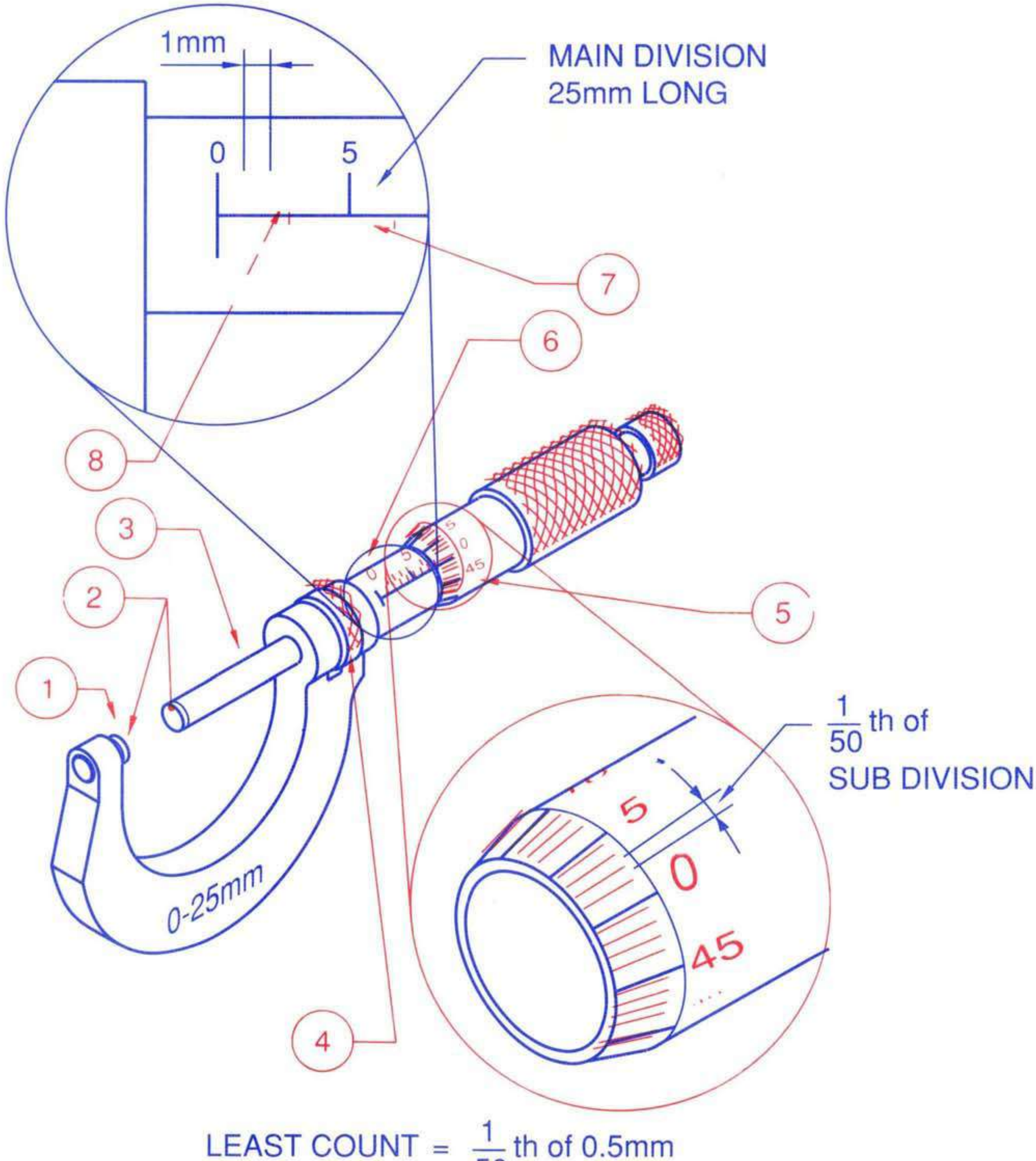

LEAST COUNT = $\frac{1}{50}$ th of 0.5mm

= $\boxed{}$

READING OF VERNIER CALIPER

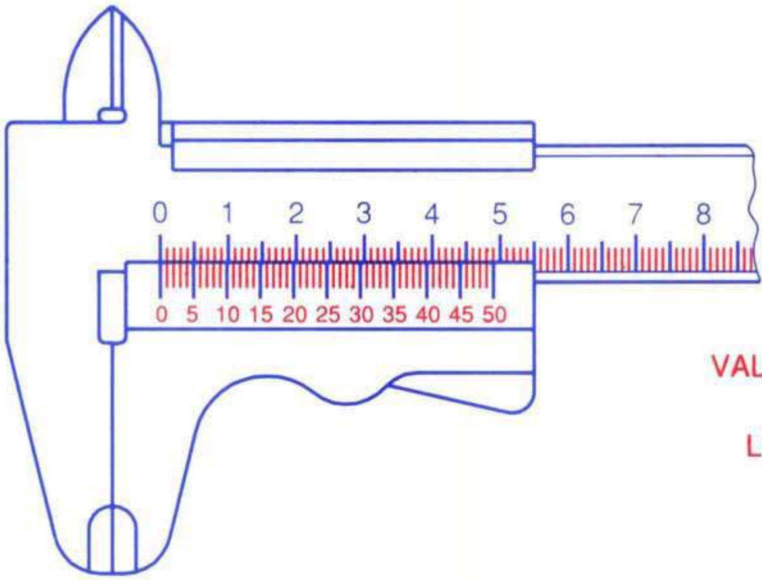

VALUE OF 1 VSD = $\frac{49}{50}$ mm

LEAST COUNT = 1 MD - 1 VSD

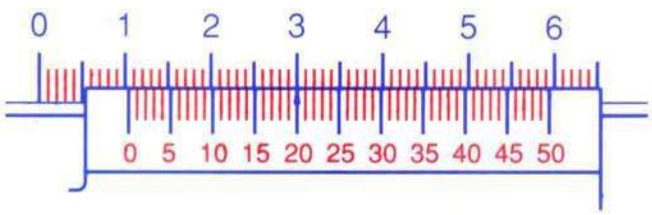

MAIN SCALE READING =

VALUE OF COINCIDING VERNIER DIVISION } =

READING =

ASSIGNMENTS:-

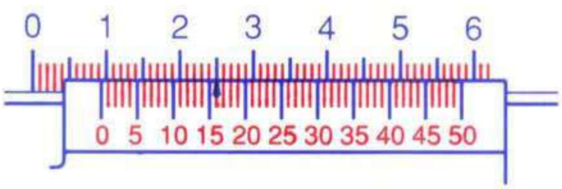

A READING

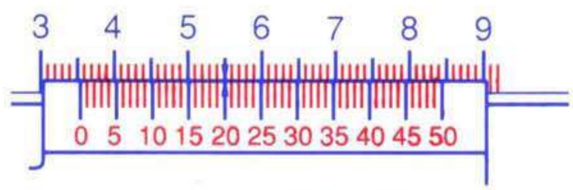

B READING

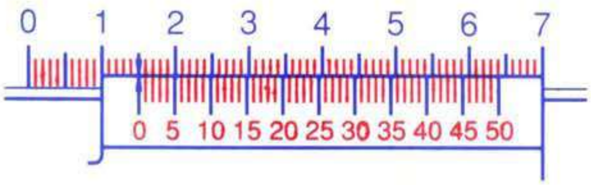

C READING

D READING

TR 01 02 01 01 95

VERNIER CALIPER PARTS AND PRINCIPLE

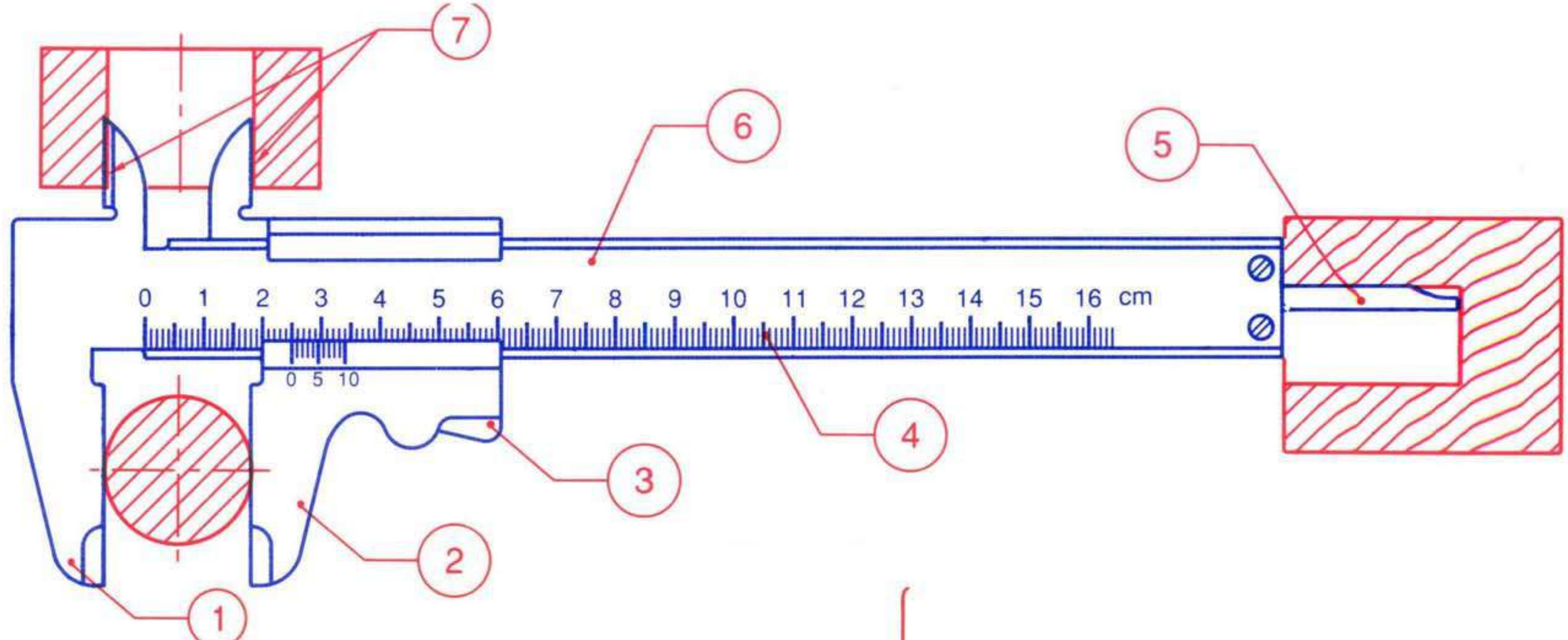

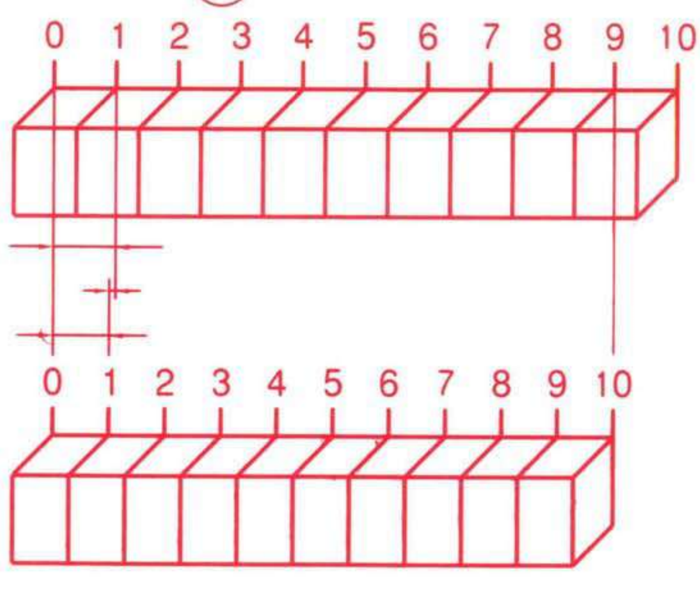

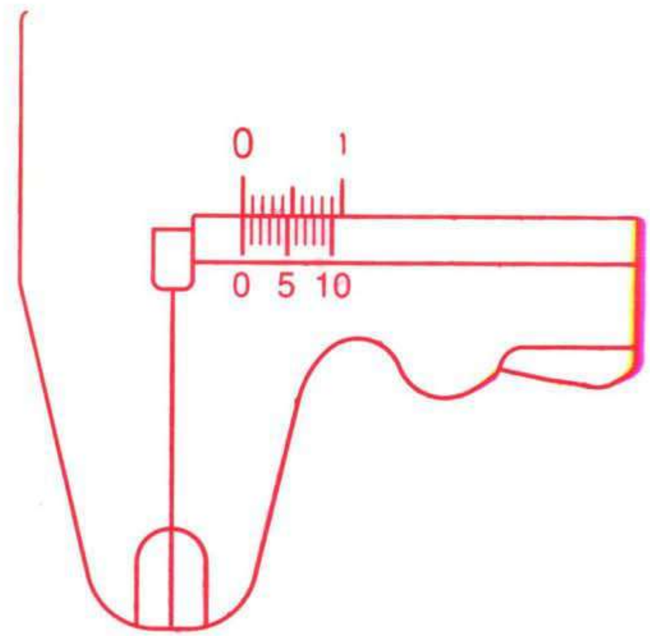

MECHANIC DIESEL

TRANSPARENCIES

CENTRAL INSTRUCTIONAL MEDIA INSTITUTE, MADRAS
AN INDO - GERMAN PROJECT

Directorate General of Employment & Training, Ministry of Labour, Govt. of India.

Developed by
CENTRAL INSTRUCTIONAL MEDIA INSTITUTE
in collaboration with DEUTSCHE GESELLSCHAFT FUER TECHNISCHE ZUSAMMENARBEIT (GTZ) Germany.
P.O.Box 3142, 76, GST Road, Guindy, Madras - 600 032. Phone : 234 5256, 234 5257, Fax : (0091-44) 234 2791

DIESEL FUEL FEED PUMP

A

DELIVERY AND SUCTION STROKE

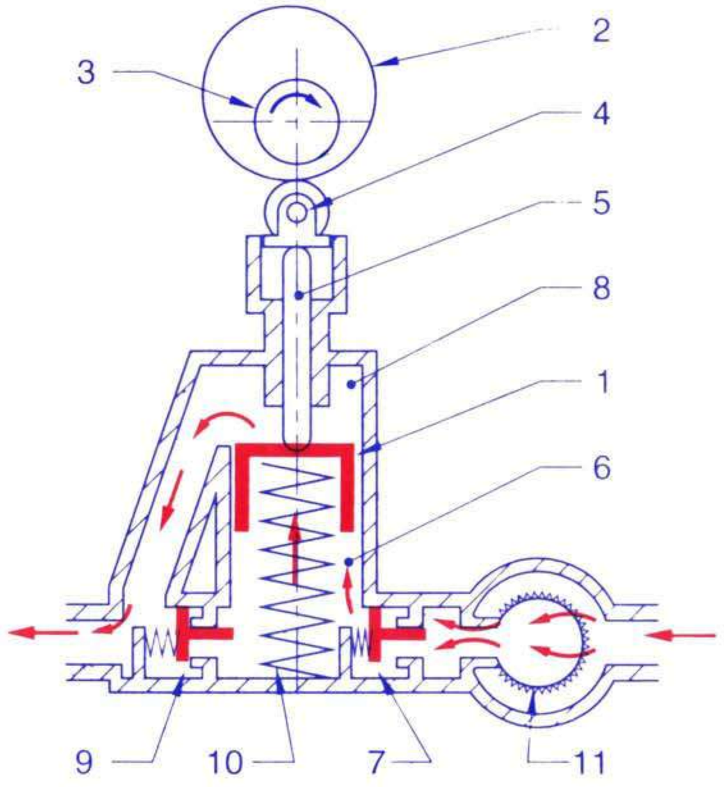

B

INTERMEDIATE STROKE / IDLING ACTION

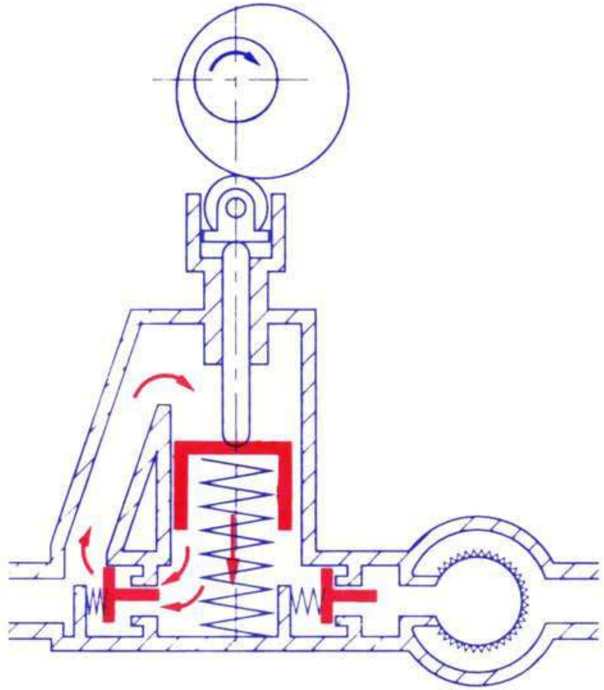

CIMI CENTRAL INSTRUCTIONAL MEDIA INSTITUTE, CHENNAI
INDO - GERMAN PROJECT

TR 10 01 01 06 99

VALVE TIMING DIAGRAM
(4 STROKE CYCLE DIESEL ENGINE)

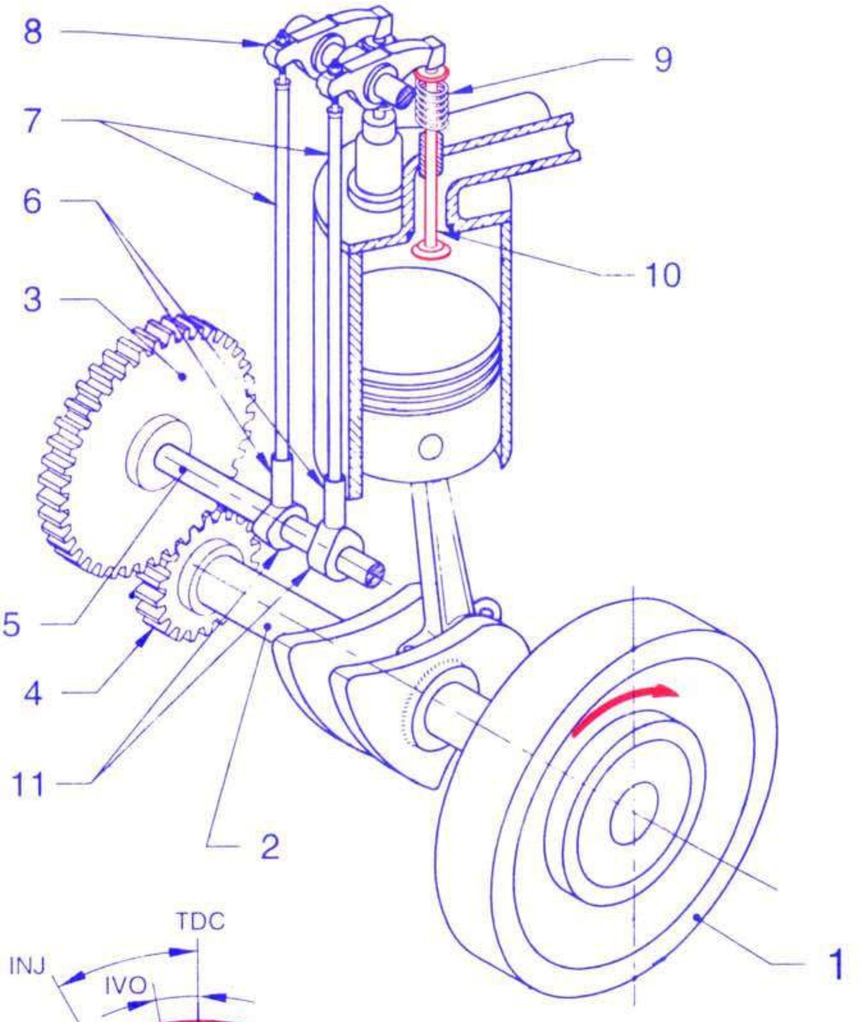

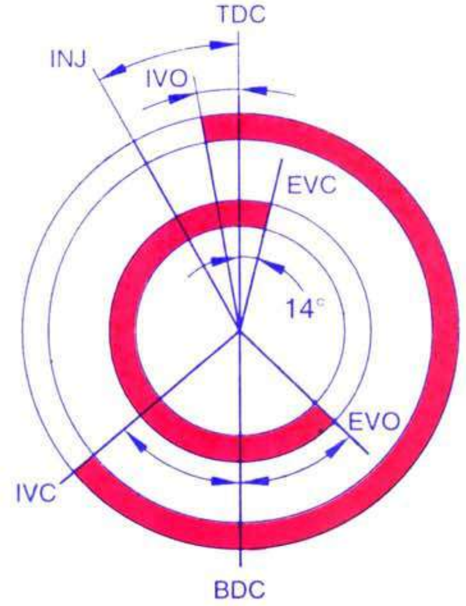

CIMI CENTRAL INSTRUCTIONAL MEDIA INSTITUTE, CHENNAI
INDO - GERMAN PROJECT

gtz

TR 10 01 01 07 99

VALVE TIMING DIAGRAM
(2 STROKE CYCLE DIESEL ENGINE)

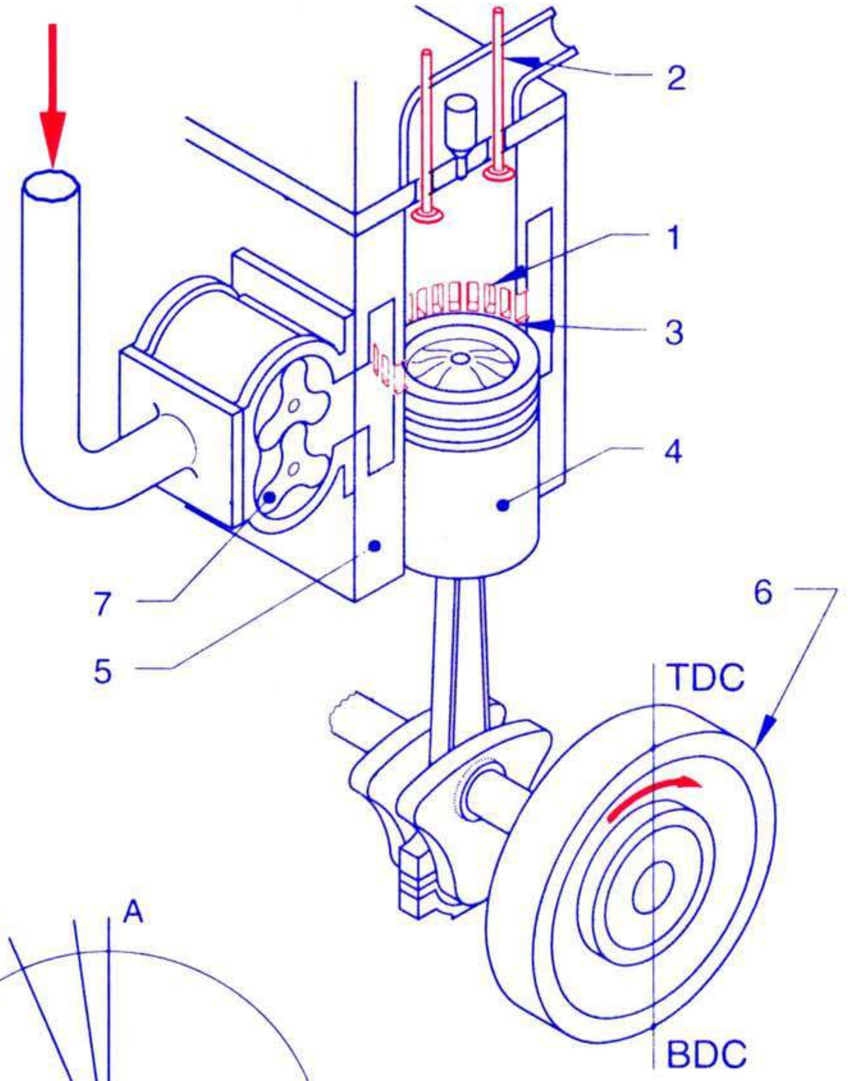

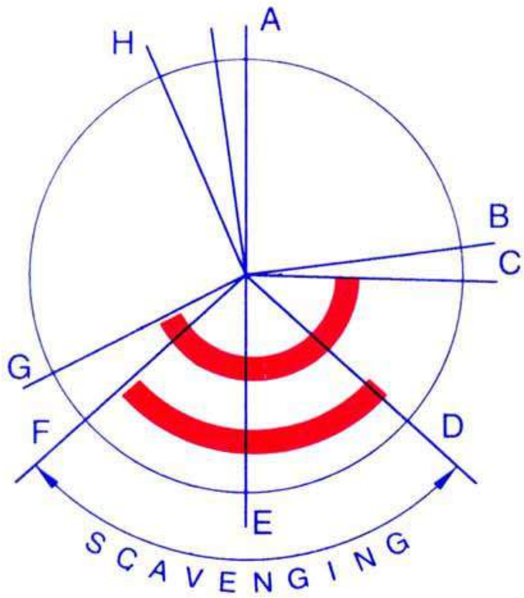

DIESEL ENGINE LUBRICATION WITH OIL COOLER

(A)

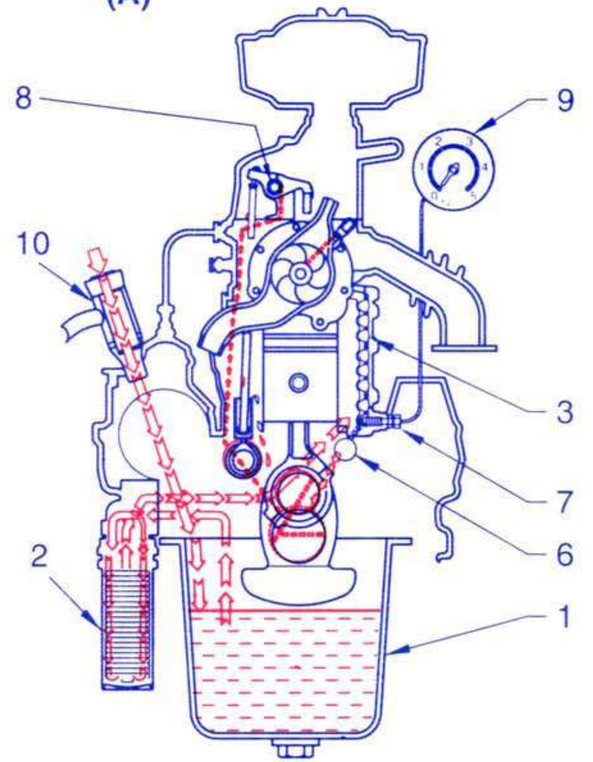

(B)

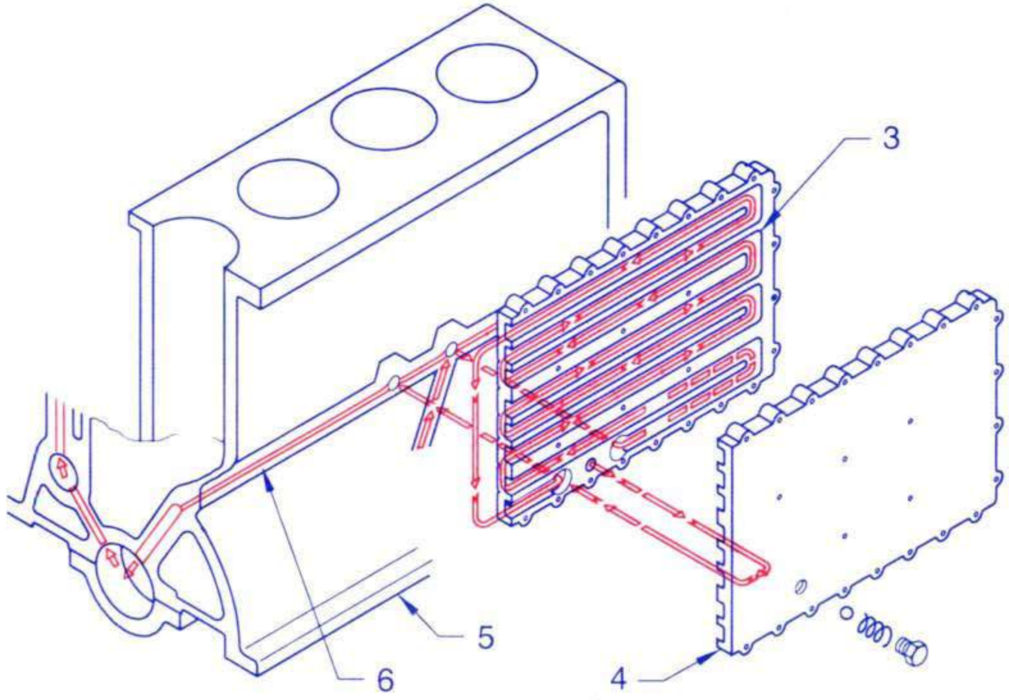

DIESEL ENGINE LUBRICATION OIL FILTER (FULL FLOW)

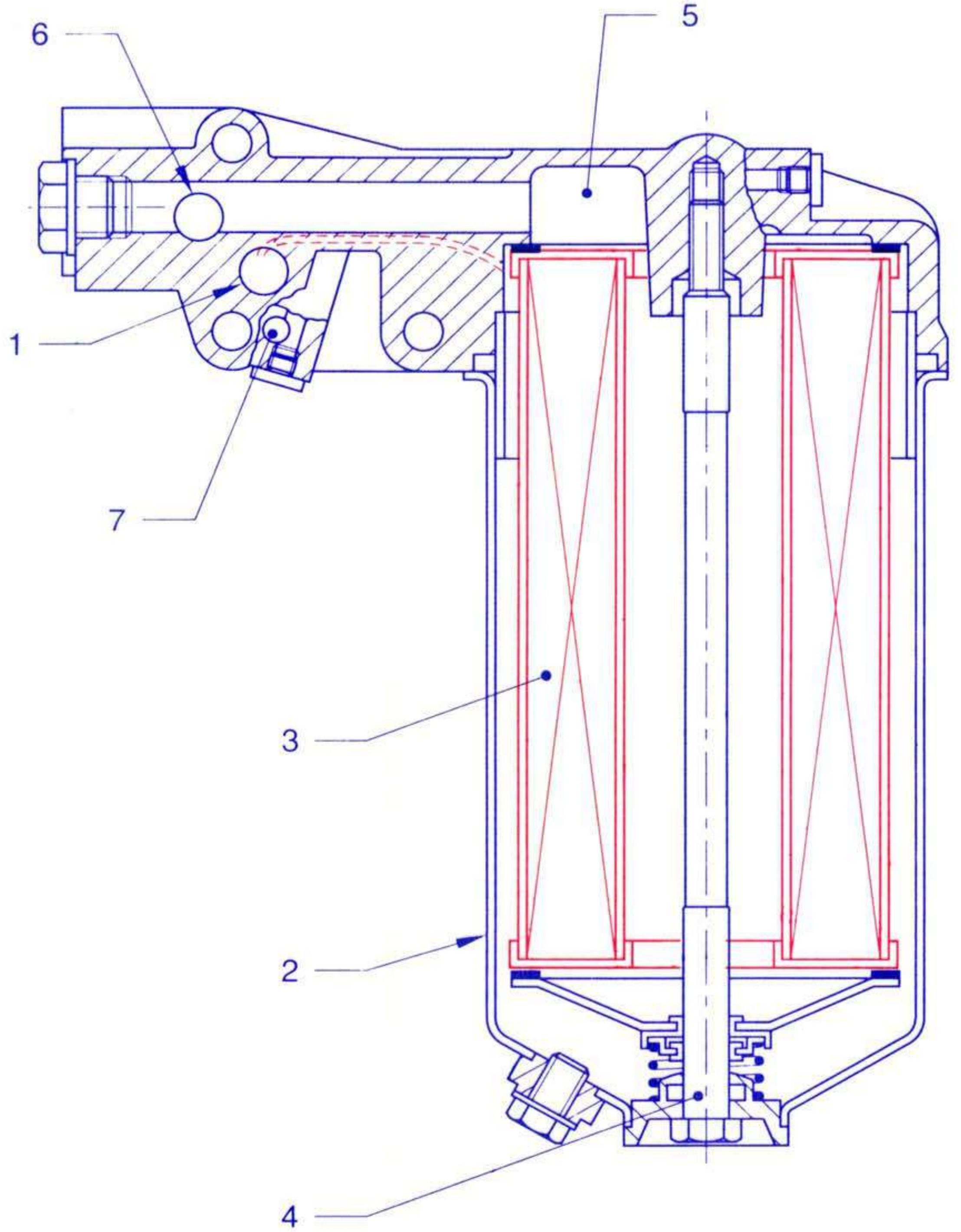

GLOW PLUG ELECTRICAL CIRCUIT

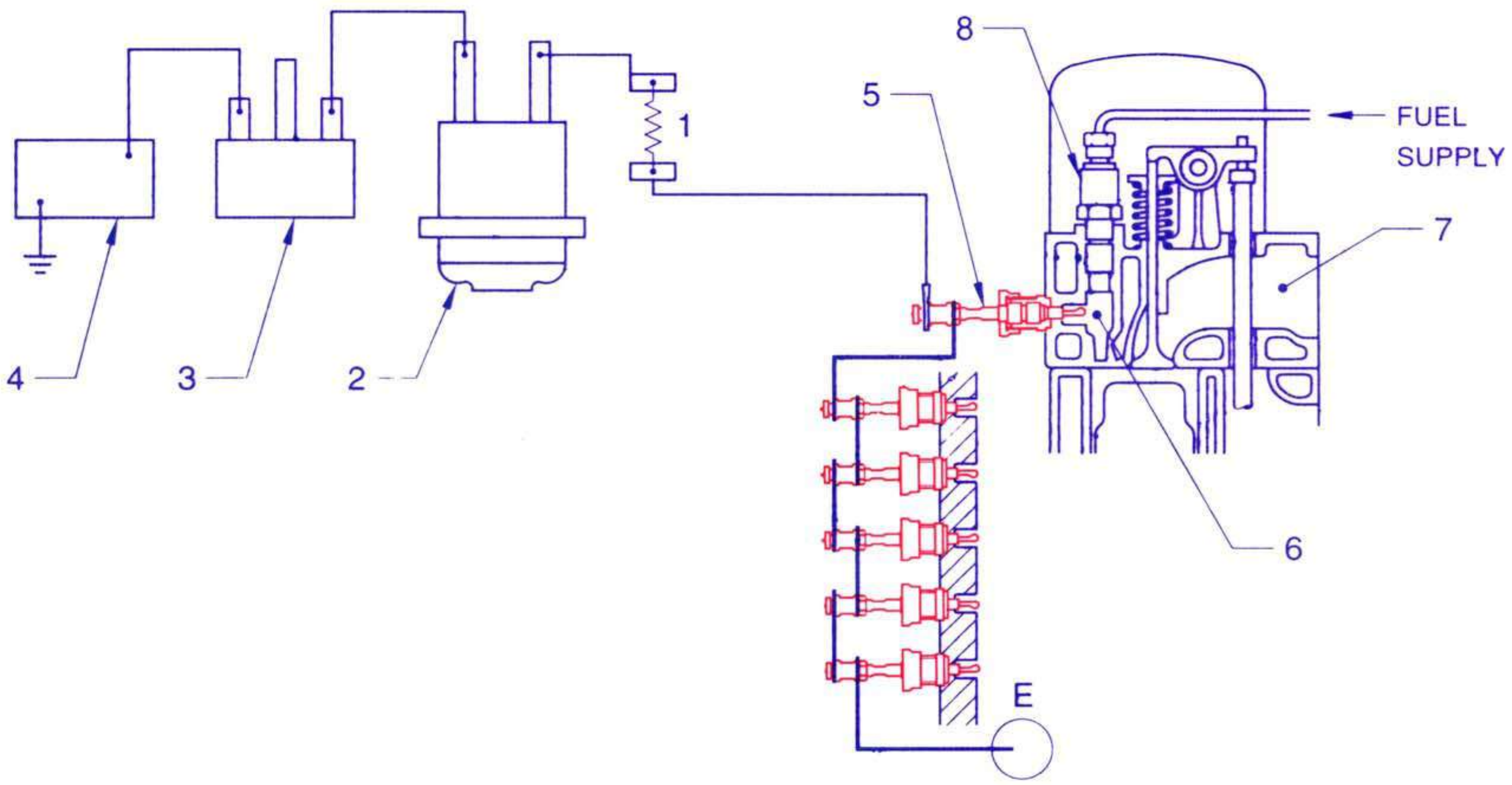

CRANKCASE VENTILATION

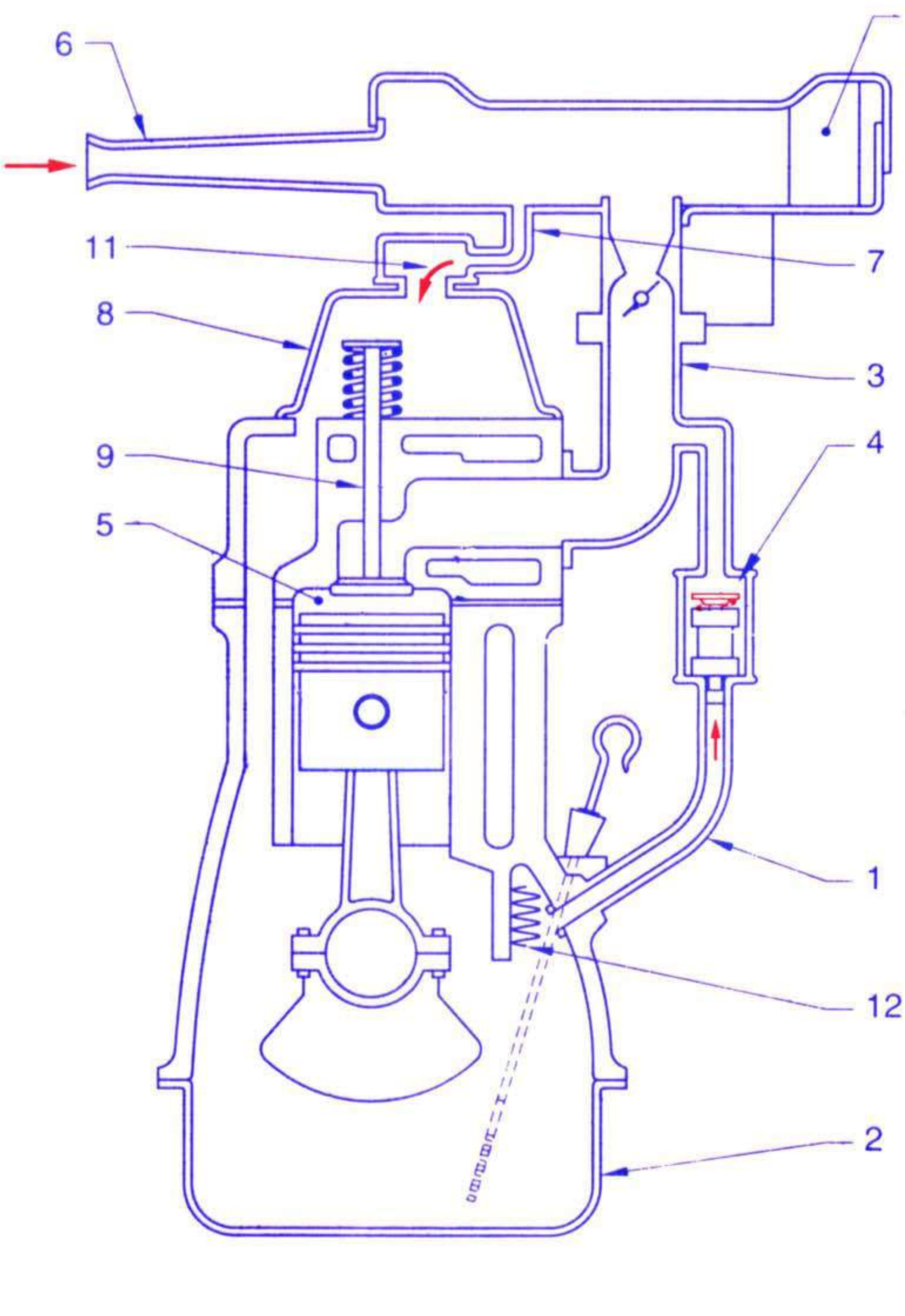

CIMI CENTRAL INSTRUCTIONAL MEDIA INSTITUTE, CHENNAI
INDO - GERMAN PROJECT

TR 10 10 04 01 99

SPARKING PLUG

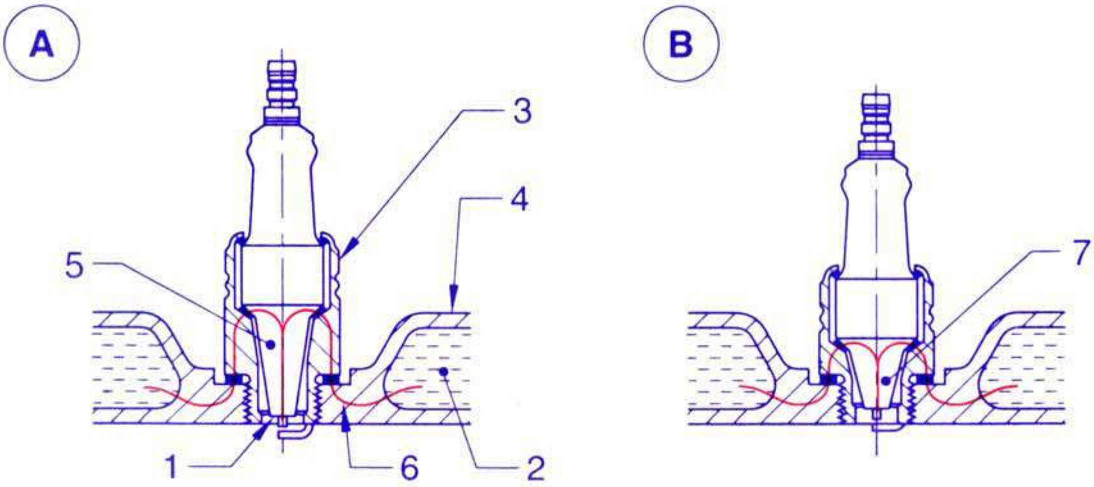

INSTALLATION

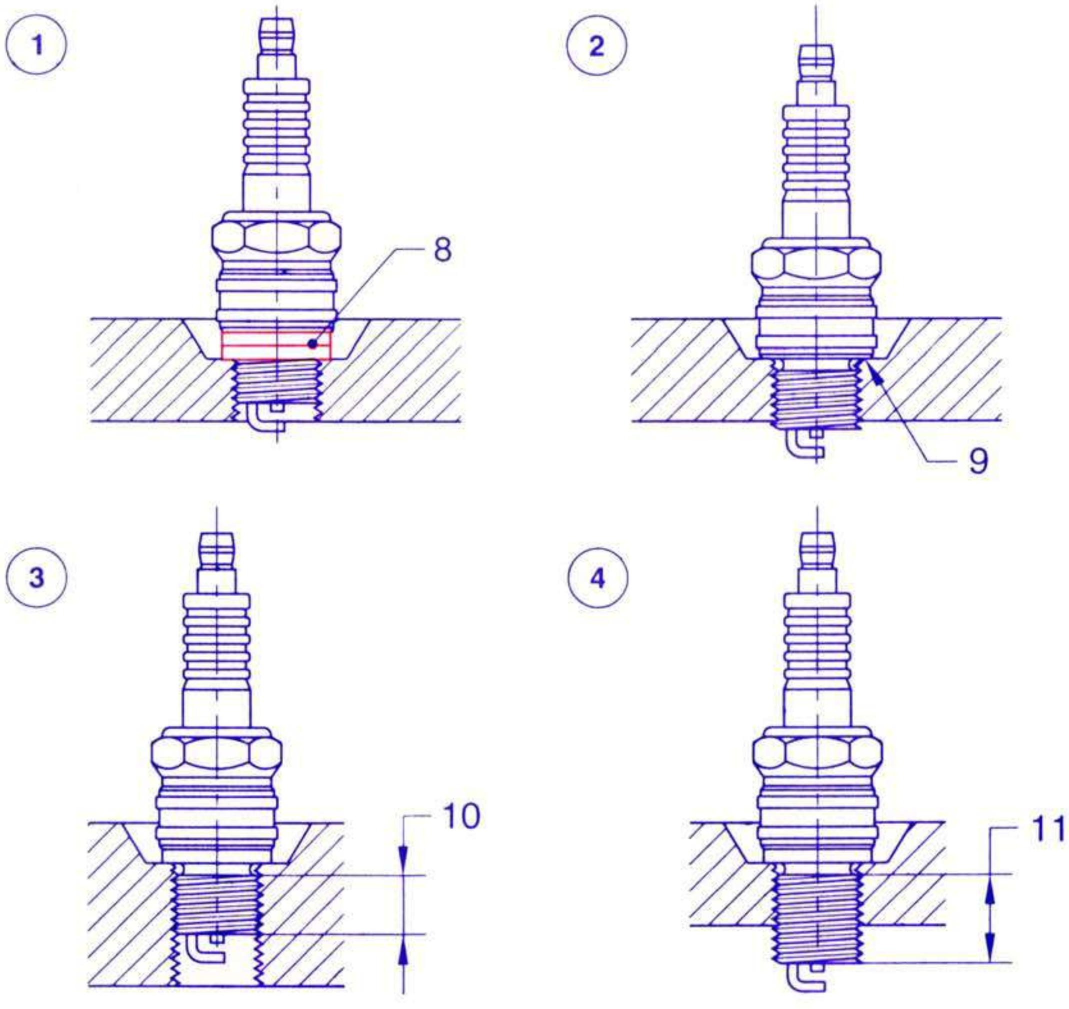

CHEMICAL ACTION IN LEAD ACID BATTERY

CHARGING

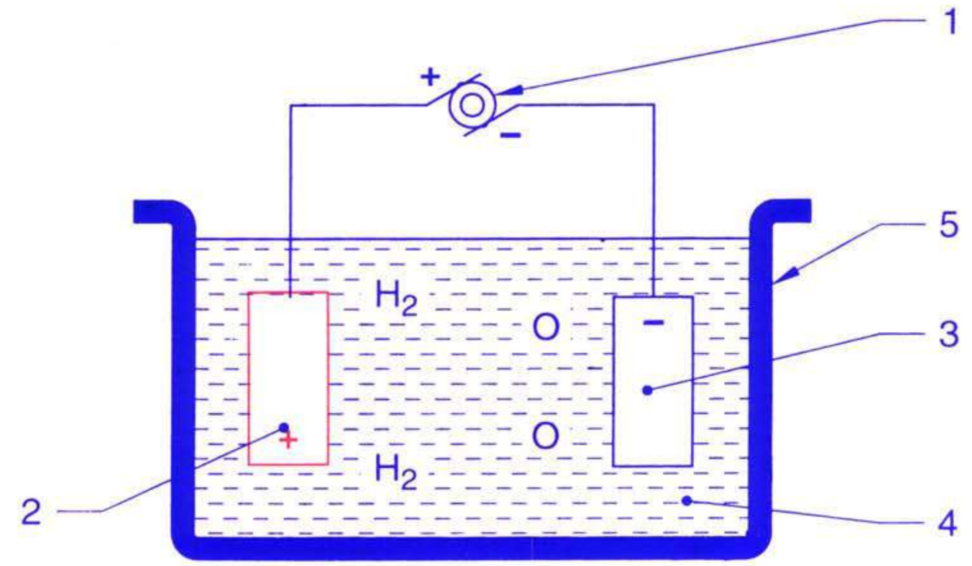

DISCHARGING

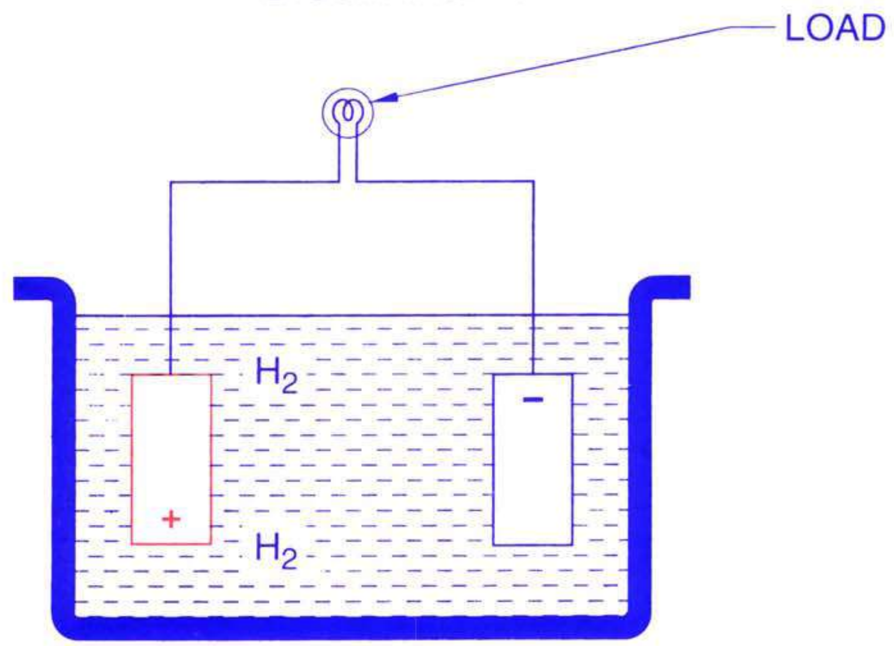

MICROMETER READING

MICROMETER GRADUATIONS

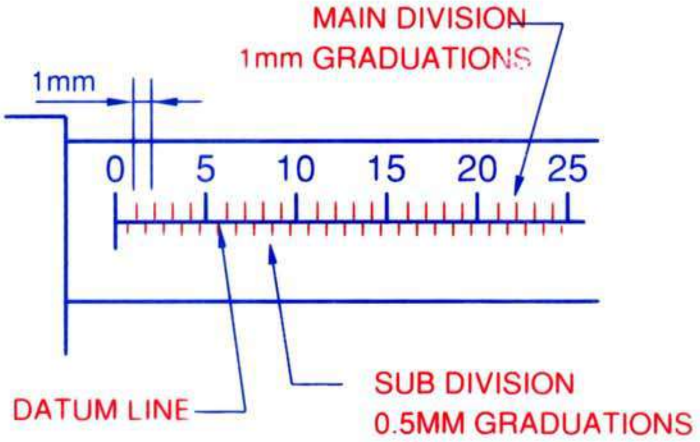

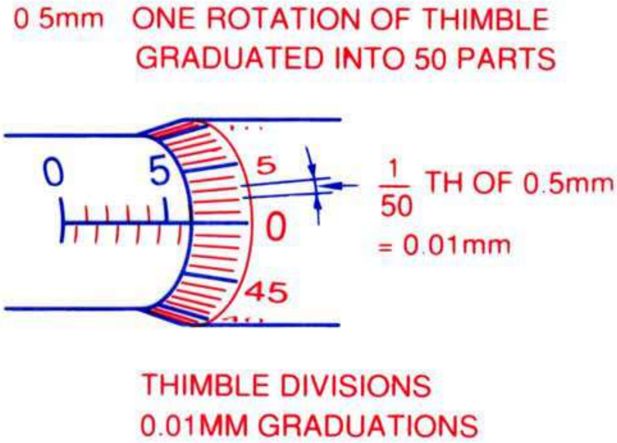

MICROMETER READING

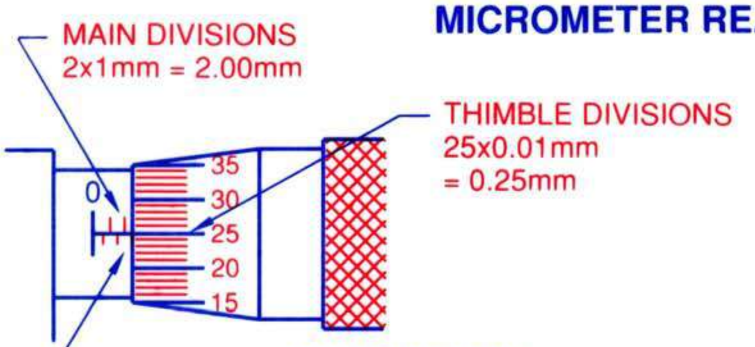

MAIN DIVISIONS =
SUB DIVISION =
THIMBLE DIVISIONS =
READING =

Example

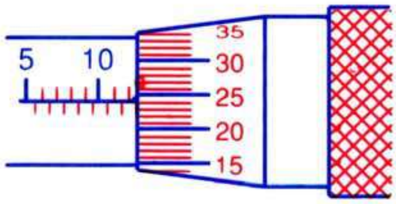

MAIN DIVISIONS =
SUB DIVISION =
THIMBLE DIVISIONS =
READING =

ASSIGNMENTS:-

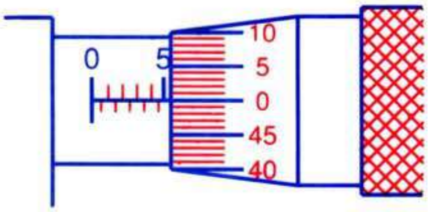

B READING

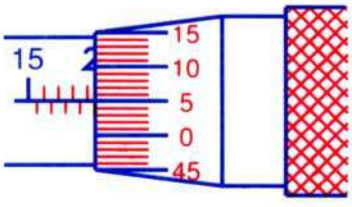

B READING

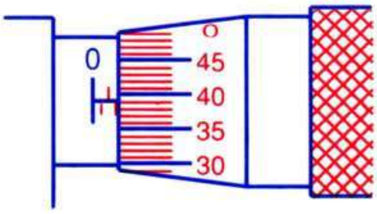

B READING

MICROMETER PARTS AND GRADUATIONS

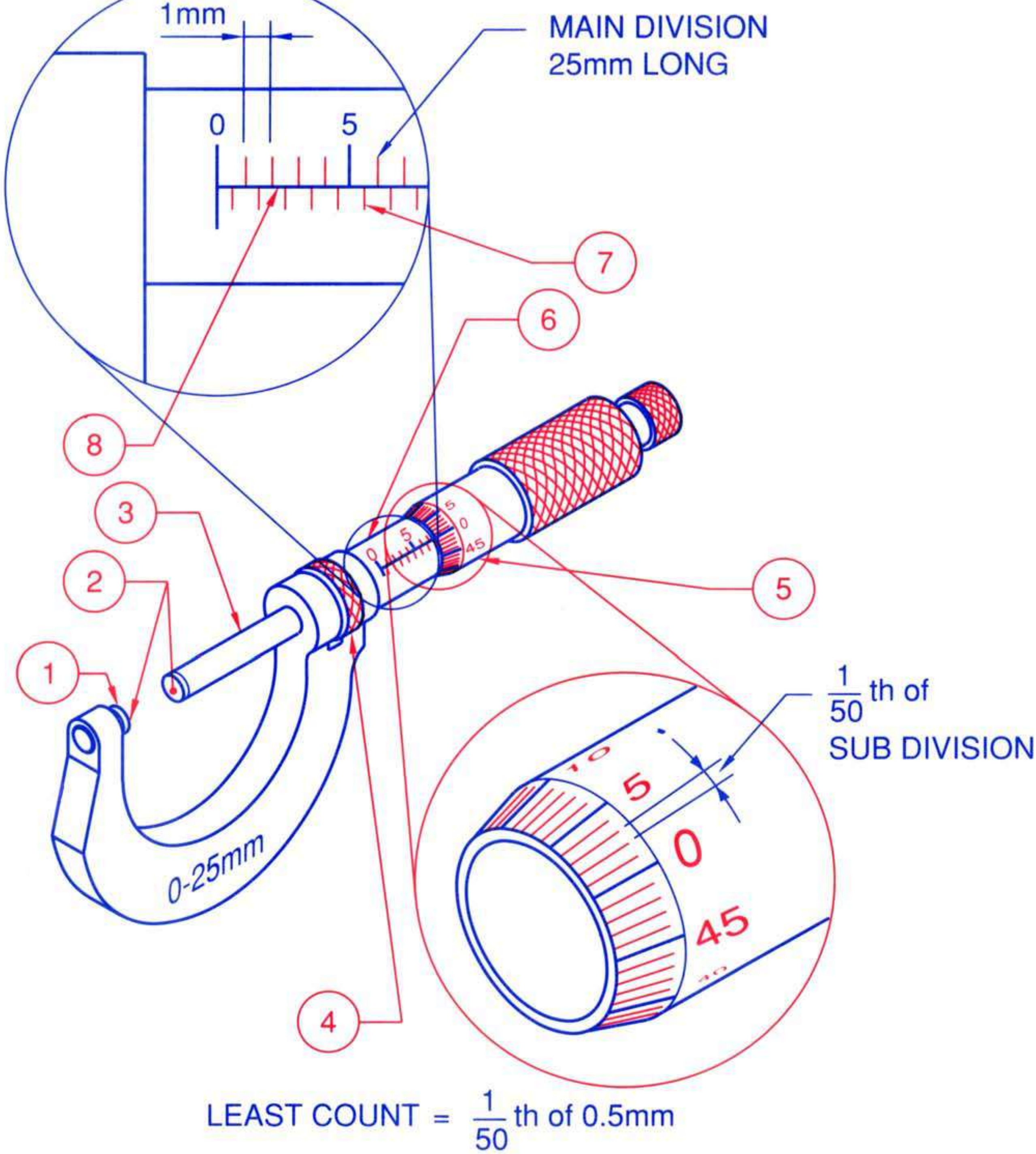

LEAST COUNT = $\frac{1}{50}$ th of 0.5mm

=

CIMI CENTRAL INSTRUCTIONAL MEDIA INSTITUTE, MADRAS
AN INDO-GERMAN PROJECT

TR 01 02 01 02 95

READING OF VERNIER CALIPER

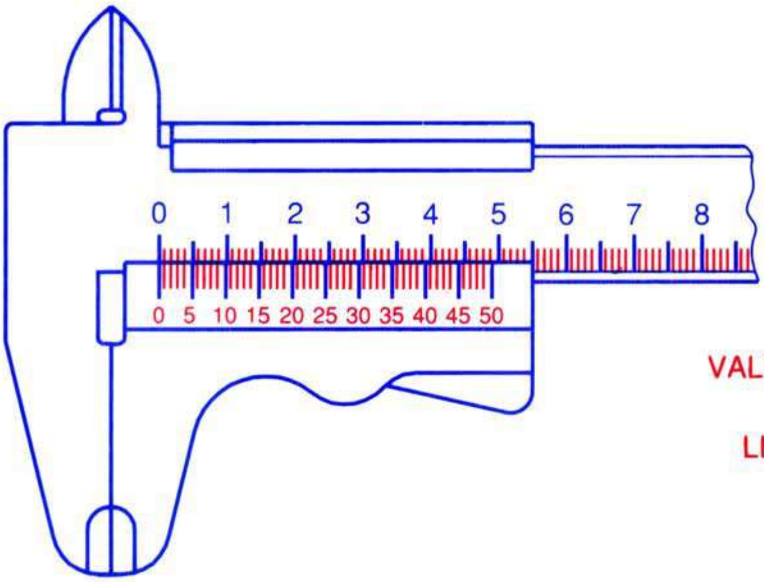

VALUE OF 1 VSD = $\frac{49}{50}$ mm

LEAST COUNT = 1 MD − 1 VSD

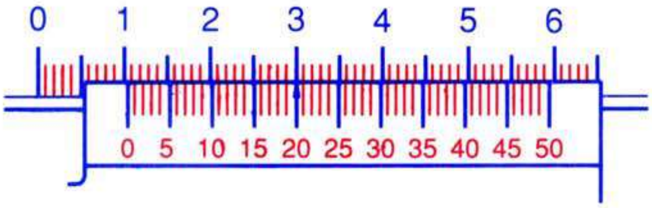

MAIN SCALE READING =

VALUE OF COINCIDING VERNIER DIVISION =

READING =

ASSIGNMENTS:-

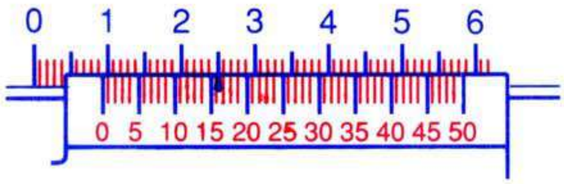

A READING

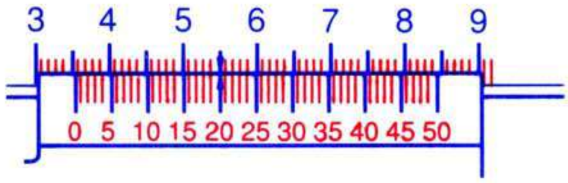

B READING

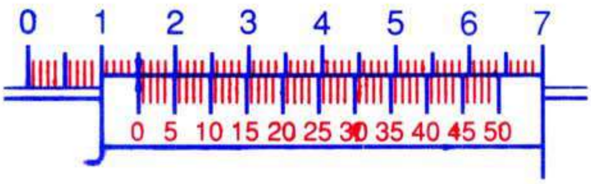

C READING

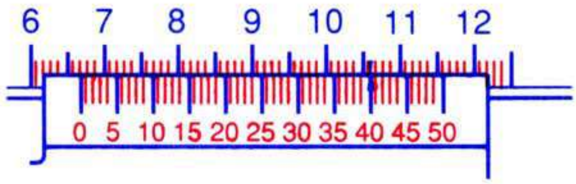

D READING

CENTRAL INSTRUCTIONAL MEDIA INSTITUTE, MADRAS
AN INDO-GERMAN PROJECT
TR 01 02 01 01 95

VERNIER CALIPER PARTS AND PRINCIPLE

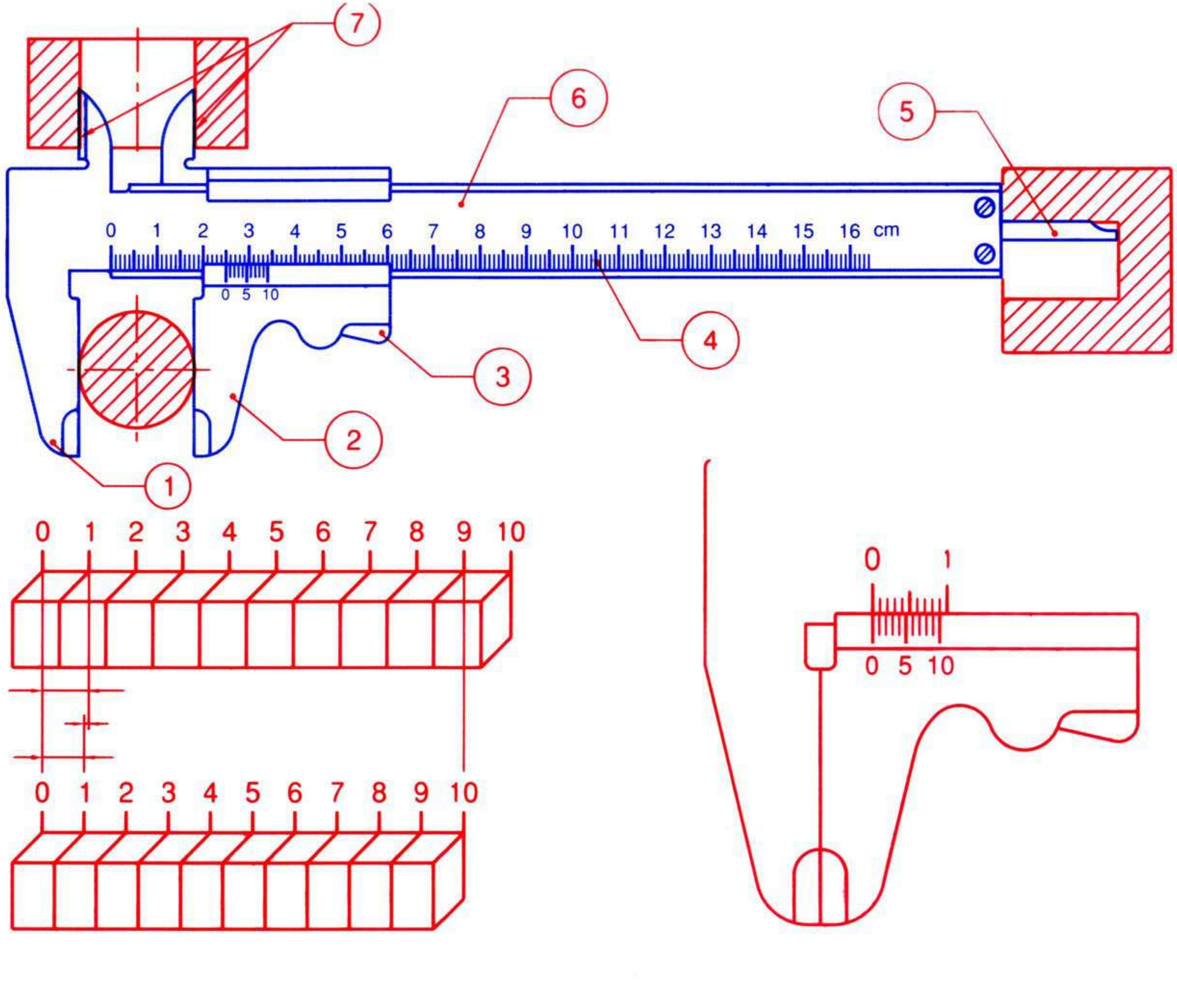

COMBUSTION CHAMBERS

(A) INDIRECT INJECTION AERO FLOW CHAMBER

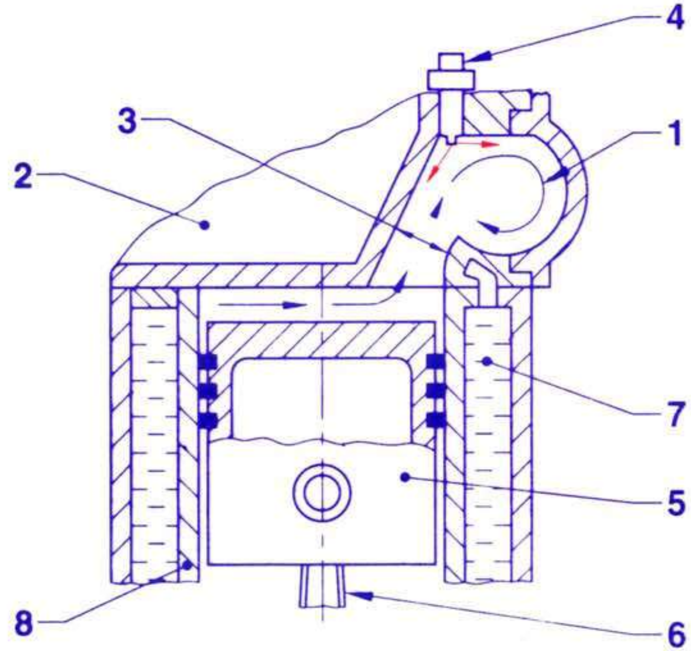

(B) DIRECT INJECTION OPEN COMBUSTION CHAMBER

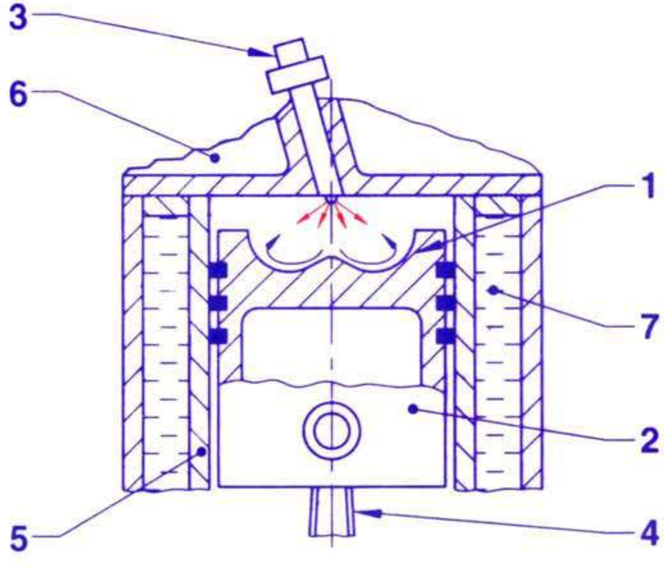

CIMI CENTRAL INSTRUCTIONAL MEDIA INSTITUTE, CHENNAI
INDO - GERMAN PROJECT

gtz

TR 10 01 04 02 99

TURBO-CHARGED ENGINE (TWO STROKE DIESEL)

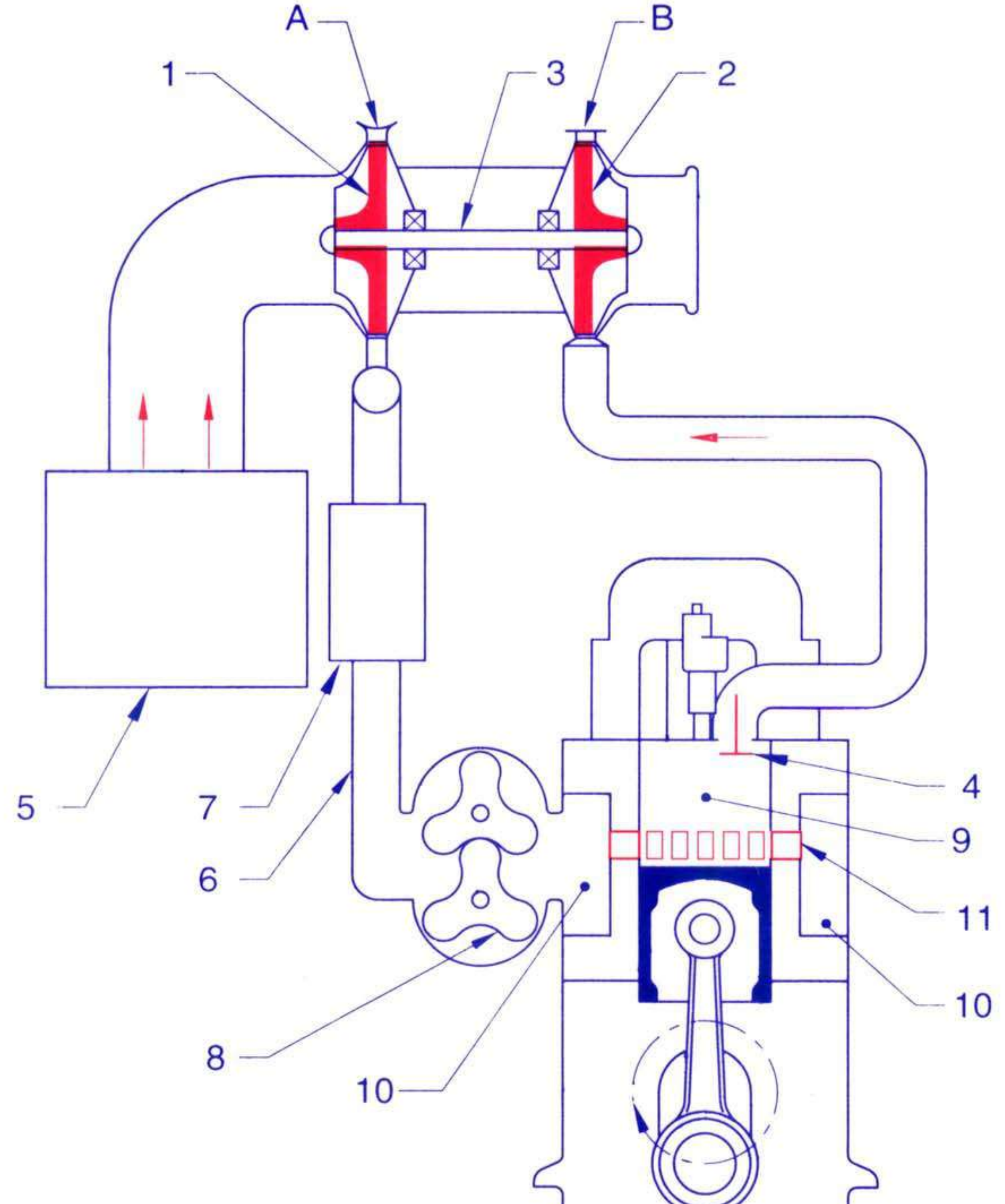

CIMI CENTRAL INSTRUCTIONAL MEDIA INSTITUTE, CHENNAI
INDO - GERMAN PROJECT
gtz
TR 10 01 05 01 99

UNIFLOW SCAVENGE

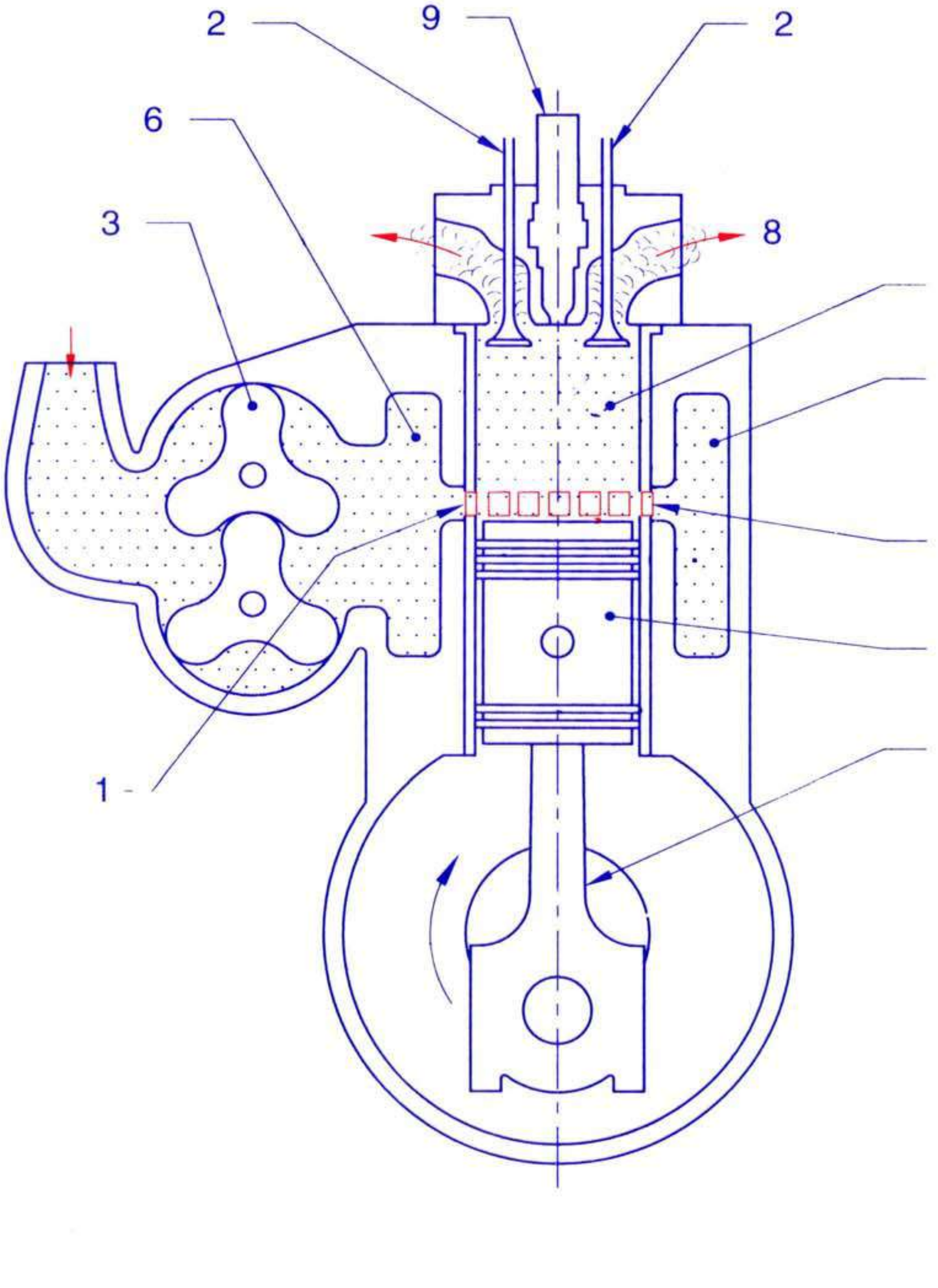

CIMI CENTRAL INSTRUCTIONAL MEDIA INSTITUTE, CHENNAI
INDO - GERMAN PROJECT

gtz

TR 10 01 05 02 99

SCAVENGING SYSTEM (DIESEL) LOOP SCAVENGE

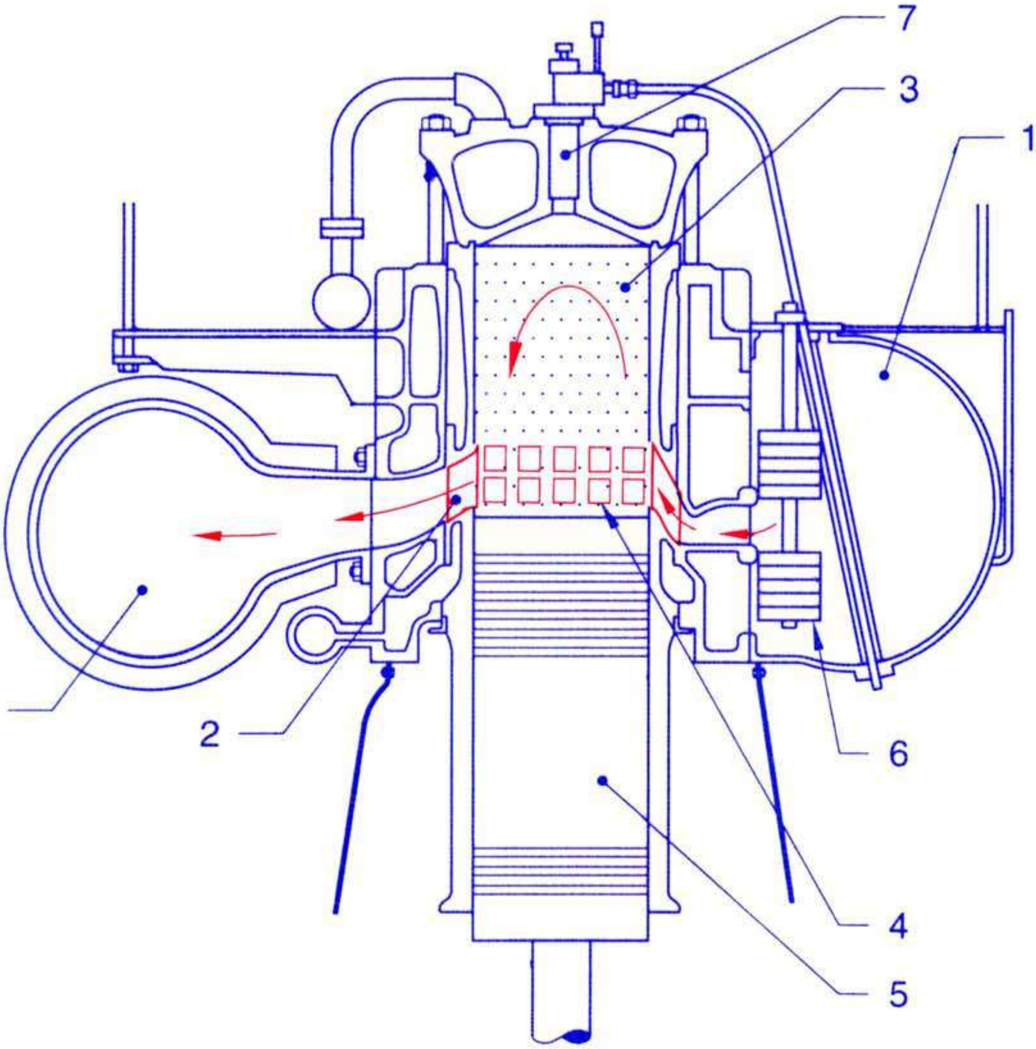

PNEUMATIC GOVERNOR FUNCTION

IDLING

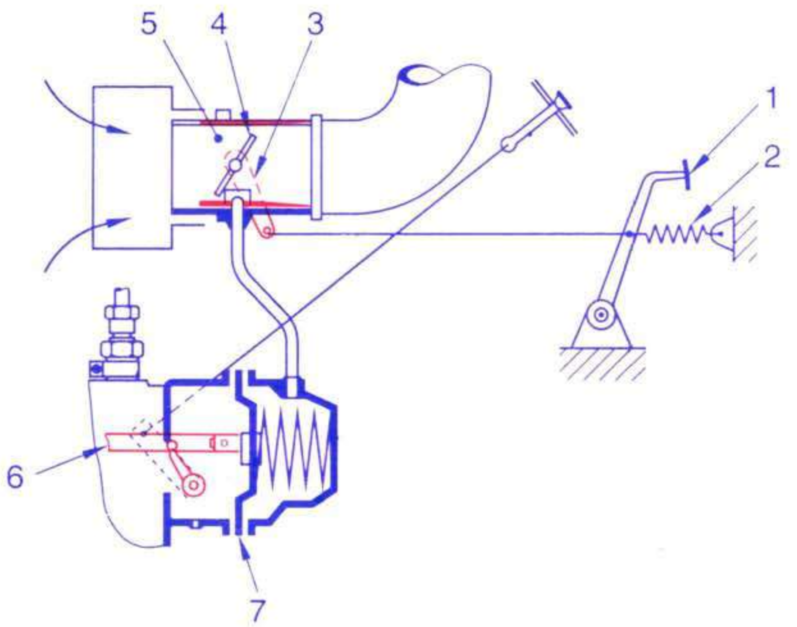

MAXIMUM RATED SPEED

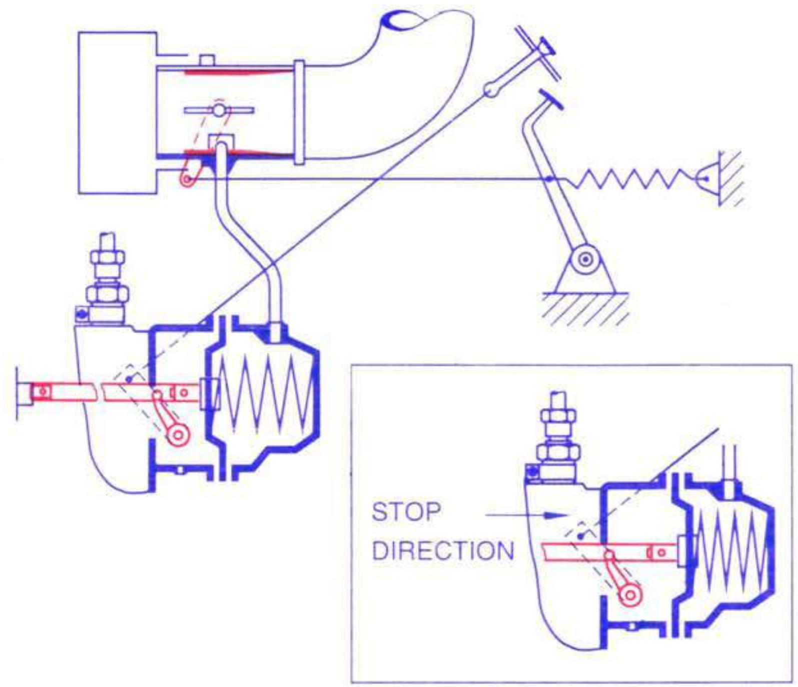

CIMI CENTRAL INSTRUCTIONAL MEDIA INSTITUTE, CHENNAI
INDO - GERMAN PROJECT

gtz

TR 10 01 03 01 99

MECHANICAL GOVERNOR PRINCIPLE (A)

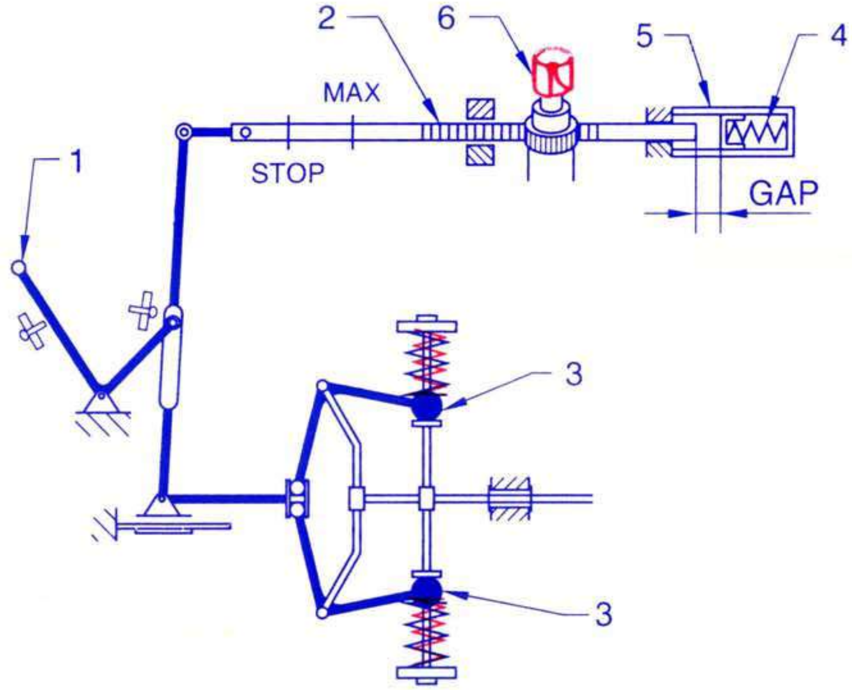

AT REST

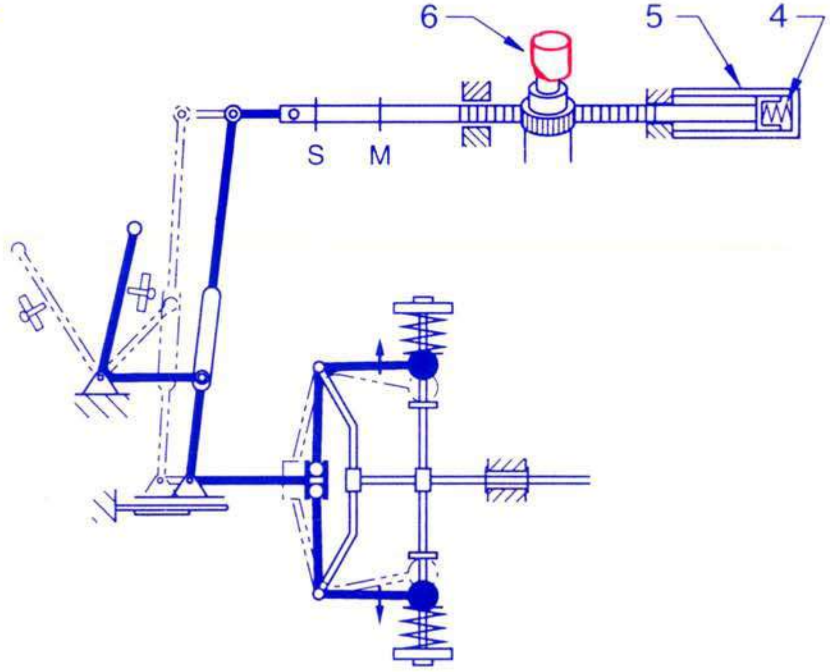

STARTING

MECHANICAL GOVERNOR PRINCIPLE (B)

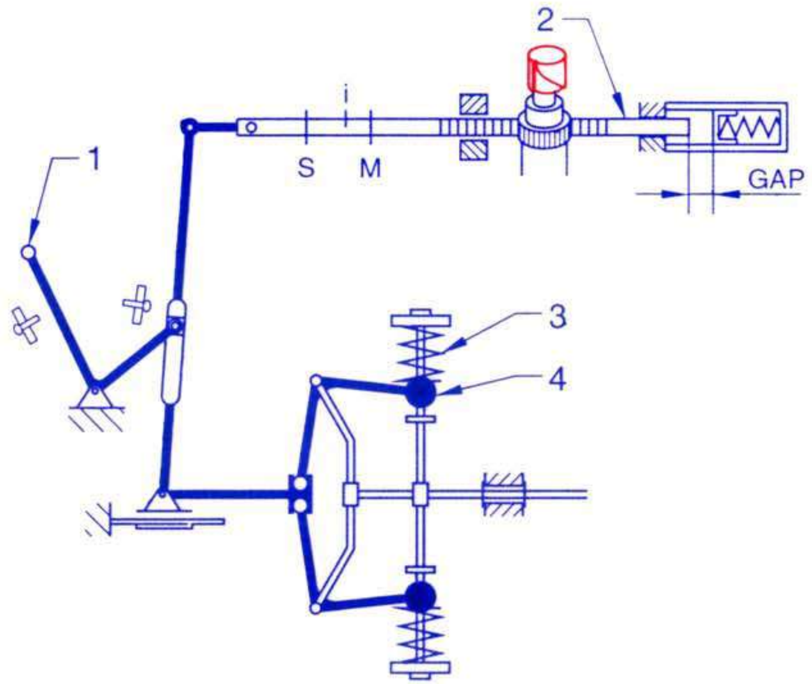

IDLING SPEED

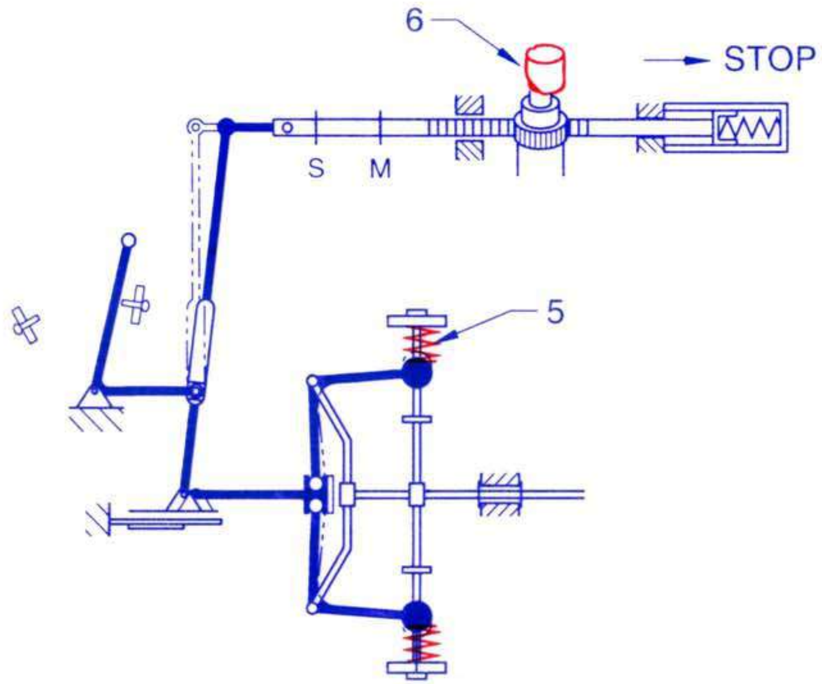

MAXIMUM SPEED

CIMI CENTRAL INSTRUCTIONAL MEDIA INSTITUTE, CHENNAI
INDO - GERMAN PROJECT

gtz

TR 10 01 03 04 99

FUEL FEED SYSTEM (DIESEL INLINE JERK PUMP)

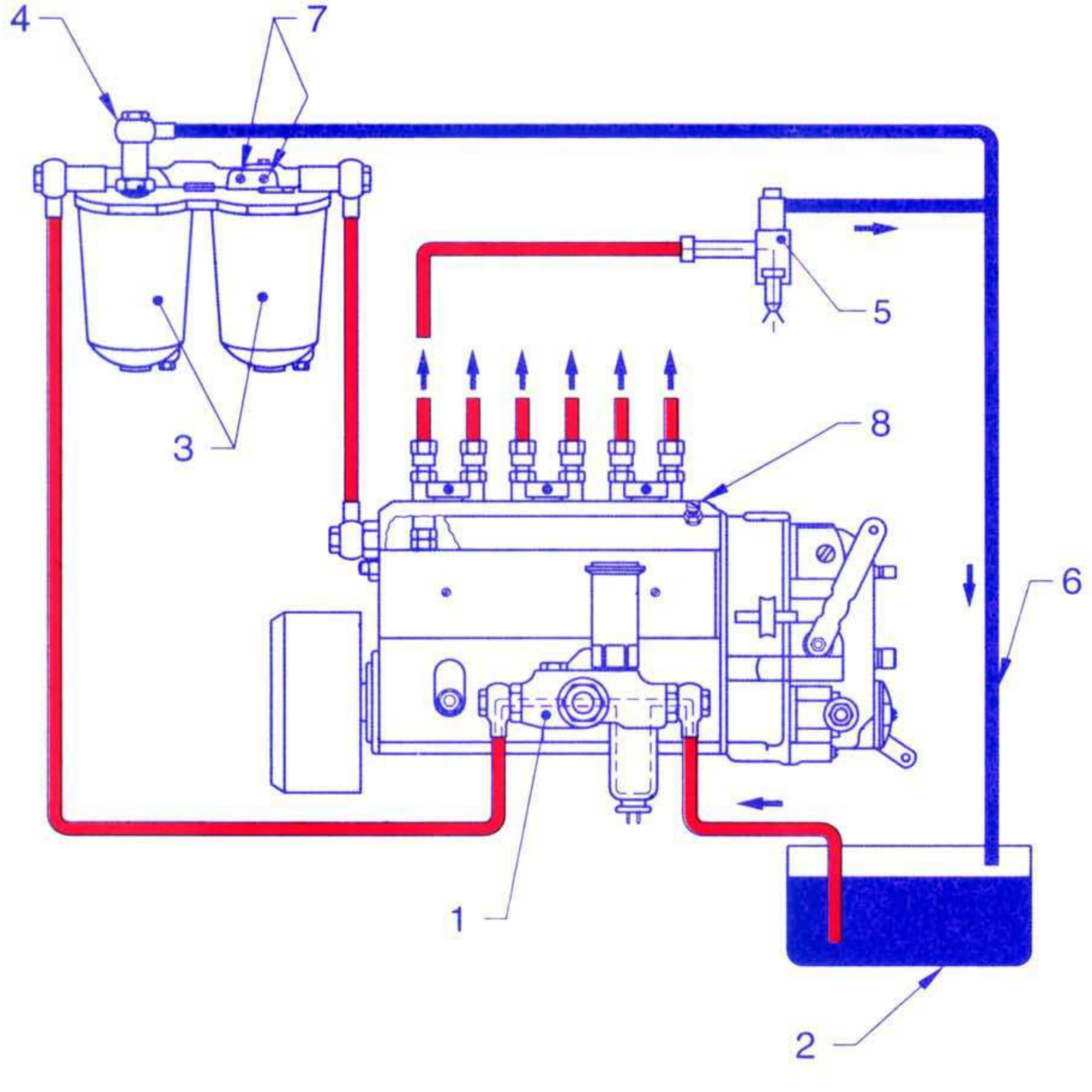

DIESEL ENGINE FUEL FILTER

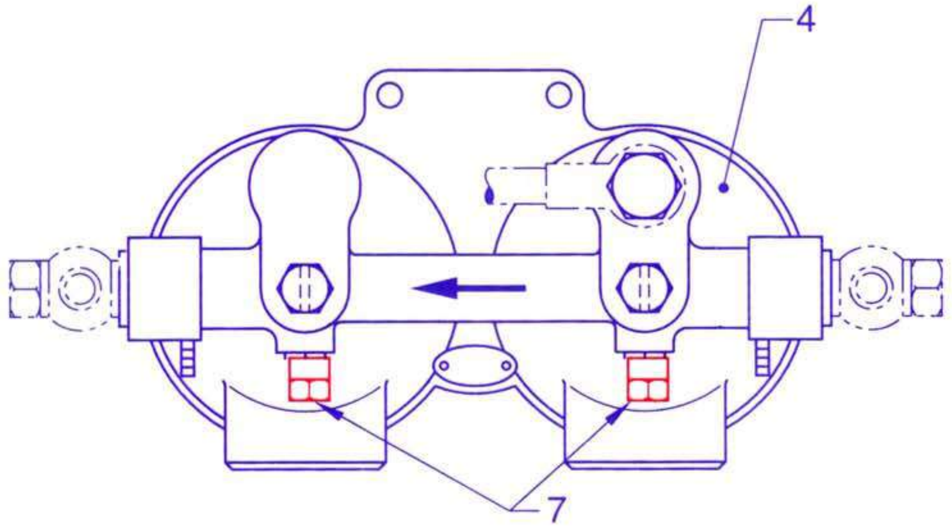

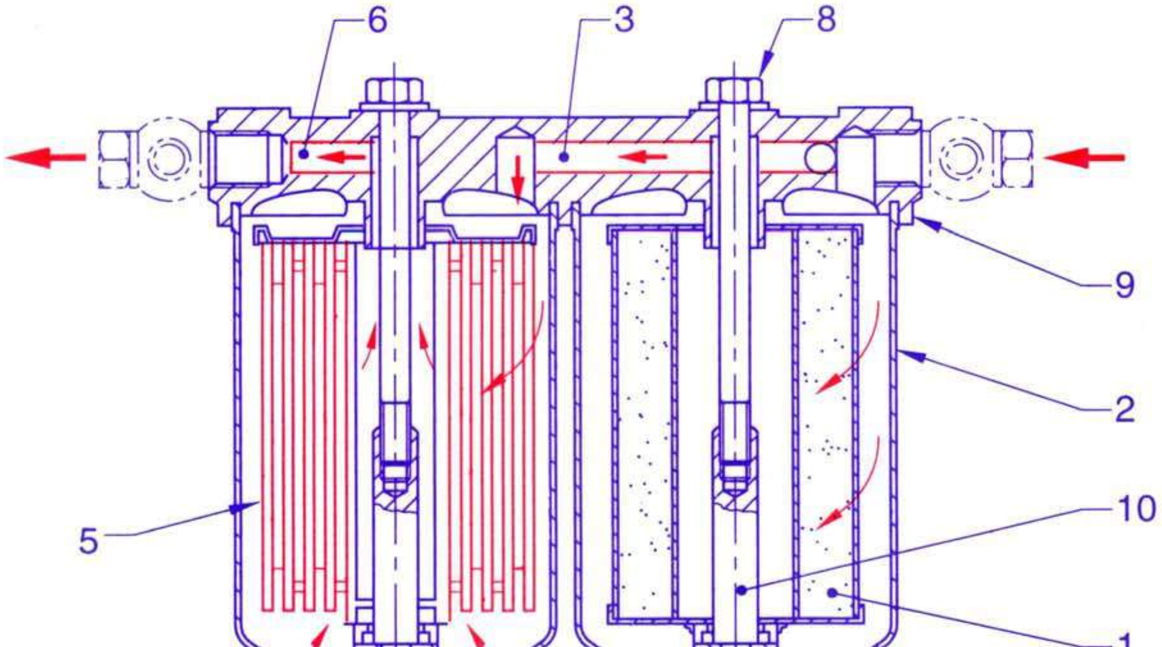

COMPARISON OF FUNCTION MULTI HOLE AND PINTLE NOZZLES

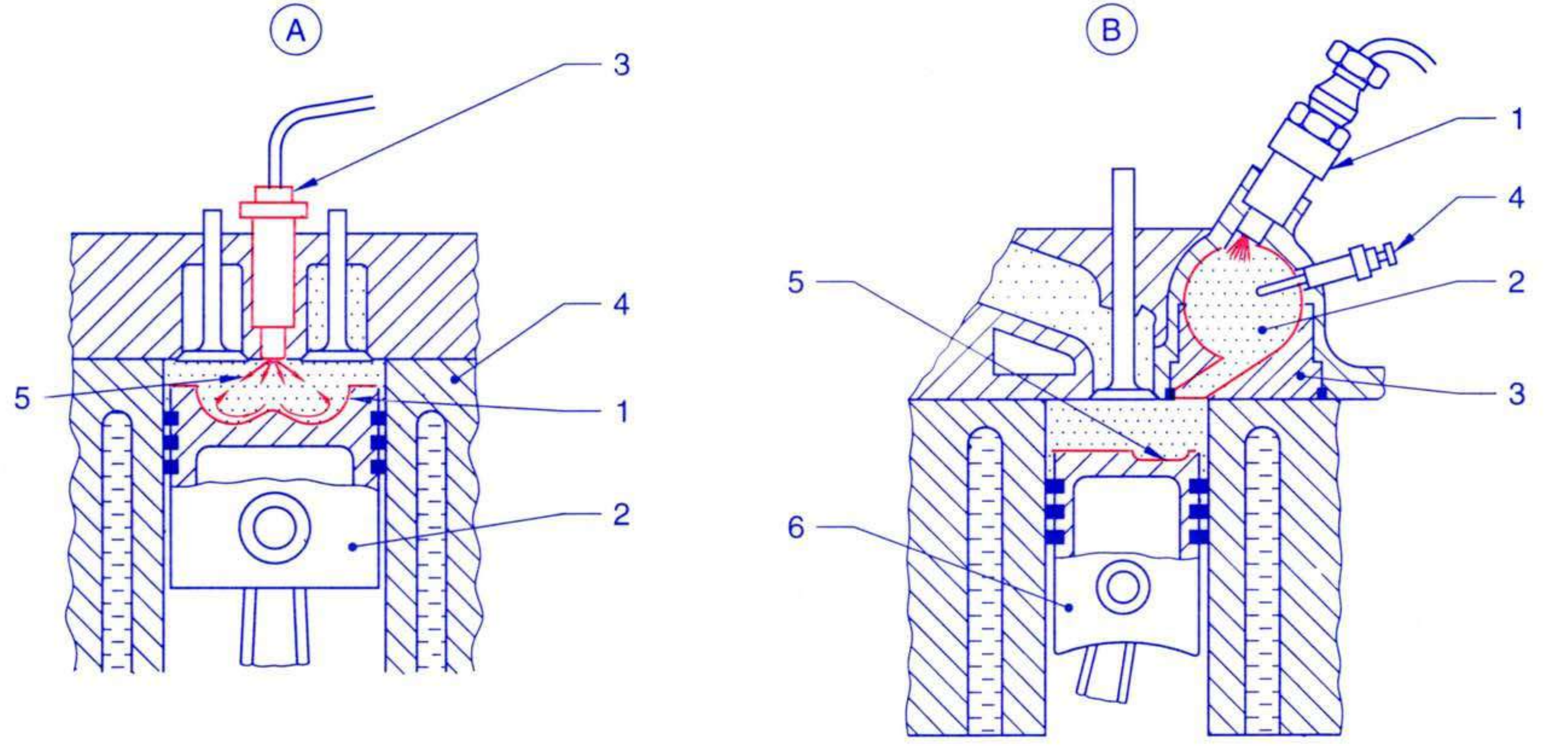

FUEL INJECTION PUMP

(A) FUEL DELIVERY POSITION

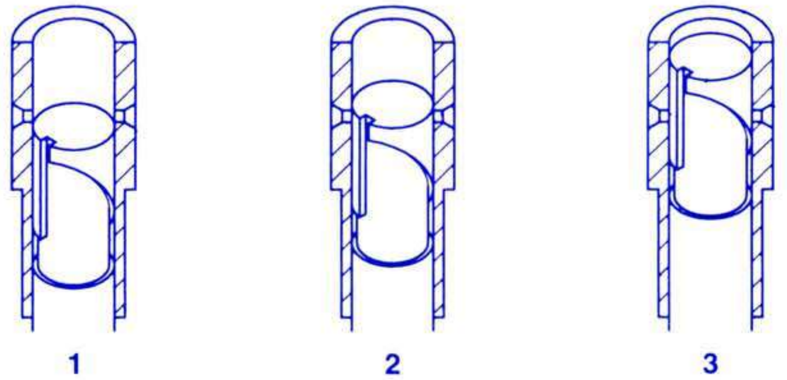

(B) ARRANGEMENT OF PLUNGER & BARREL

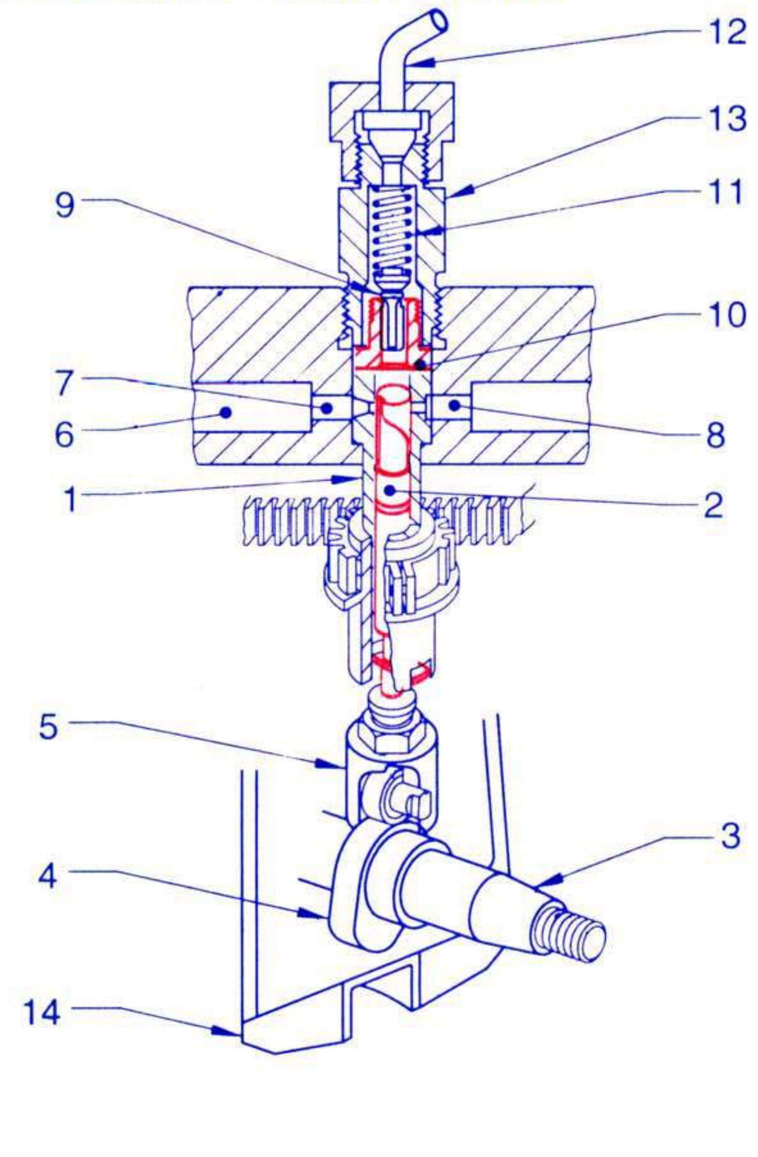

PISTON RINGS ASSEMBLY

(A) COMPRESSION RINGS

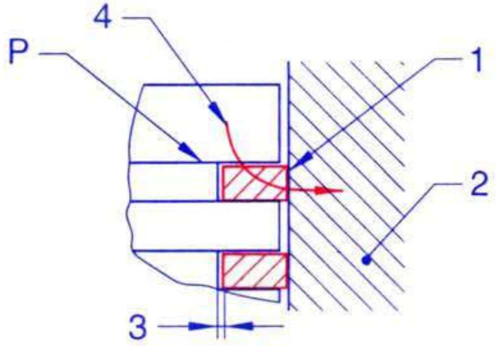

TYPE 1

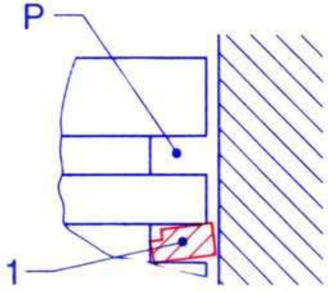

TYPE 2

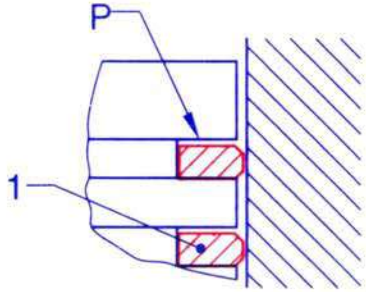

TYPE 3

(B) OIL CONTROL RINGS

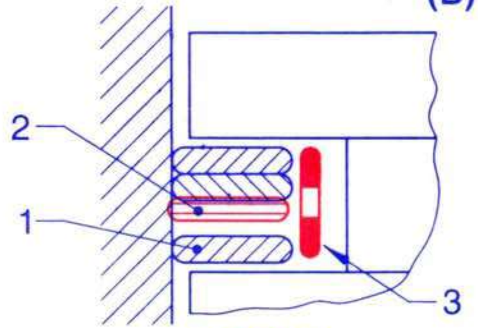

TYPE 1

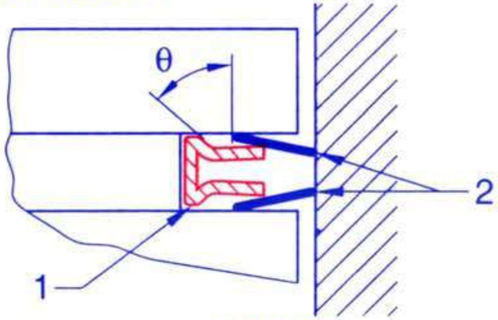

TYPE 2

Vocational Education Teacher Training for the Implementation of "Reflection Learning"

– A Case Study of a Successful GTZ Implementation in Serbia, including a Road Map for Starting Reflection Learning in Other Countries -

Report to
German Technical Cooperation (GTZ-CRYSTAL)

Michael Axmann
Chapel Hill, NC 27514, USA
Michaelaxmann@yahoo.com

March 04, 2004

Content

Explanations and Definitions (*German expressions in italics*) used in Teacher Training in Serbia	
Annual Didactical Planning (*Didaktische Jahresplanung*)	Interdisciplinary planning done by all the teachers in one vocational class at the beginning of the school year
Case Studies (*Fallstudien*)	Complex situations in business administration to be tackled by teams of students
Cooperative Reflection Counseling (*Kollegiale Praxisberatung*)	Counseling approach used for giving feed back to teachers
Economics, Business Administration, Accounting and Office Work (*Wirtschaftswissenschaften*)	Focus of the training offered in this course using five different modules
Modules	Key areas of teacher training covered in this course
Future Lab (*Zukunftswerkstatt*)	Teaching method developed by R. Jung to bring out creative potential in people
Key Qualifications (*Schlüsselqualifikationen*)	New requirements to be met in the labor market such as the ability to think in functional matters, to plan precisely, to anticipate difficulties and to implement solutions that truly respond to problems
Life Skills (*Handlungskompetenzen*)	Competencies acquired in this course dealing with subject matters, people and one self
Method Manual (*Methodenhandreichungen*)	An array of practical tips for using reflection-learning methods during this course
MT (Moderator or moderator team)	One or more teachers who organize teacher training
Question-related Methods *(fragend-entwickelnder Unterricht*)	Teaching method which will focus on methods using questions and answers in cooperation with students
Reflection Learning (*Handlungsorientierung*)	New approach in vocational education based on whole cycles of learning. "Reflection Learning", as it is used in this report here, refers to learning processes that are relevant for learners, that stress comprehensive and joint planning in groups, and that produce planning strategies that take concrete actions and finally evaluate the results.
Scenario Technique (*Szenariomethode*)	Teaching method that can deliver pictures of future situations
Self-organization	One of the three pillars of the program apart from teamwork and combining theoretical and practical aspects of teaching
Simulated Enterprise Offices (*Lernbüros*)	Simulation of work in a wholesaling company
Supervised Trial-run Teaching Situations (*Gruppenhospitationsunterrichts*sbesuche)	Teaching experiments of teachers in their schools in the presence of teacher trainers and peers
Teacher Functions (*Lehrerfunktionen*)	These are besides teaching counseling, educating, organizing, inventing and grading
Teaching Observation Sheets (*Unterrichts beobachtungsbogen*)	Worksheet for taking notes during teaching experiments

Abstract

This case study was written after having worked in Serbia in vocational education teacher training for three assignments spread over almost 12 months. The material for this case study is based on my own training material, training strategy and feed back from the participants as well as on my own observations of the teachers in my workshops.

It outlines my strategy of carrying out teacher training in Serbia, provides the material used in the teacher training and describes the three steps taken in a five week program – a two-week teacher training seminar, followed by two-week trial-run teaching situations in various vocational schools in Serbia and finished off with a one week teacher training seminar for future teacher trainers.

This approach illustrates a comprehensive package of training interventions with the focus being on the implementation of Reflection Learning Practices (RLPs) in schools. Reflection Learning stands for learning processes that identify problem situations that are relevant for learners, stress comprehensive and joint planning in groups and come up with strategies that take physical action and finally evaluate the results.

The case study first focuses on the Serbian experience and then drafts a roadmap for running these kinds of programs in other countries. The case study provides the complete set of training materials used in the five-week training program in the annex.

Acknowledgements

First of all I would like to thank Dr. Gustav Reier from the GTZ project Reform of Vocational Education in Serbia for letting me work in Serbia and his support in carrying out three assignments within in the last 12 months there and special thanks goes to all the workshop participants that I had the pleasure in working with for five whole weeks.

This case study would not have been written without the keen interest of Friedrich Hammerschmidt, GTZ-CRYSTAL, in teacher training. I am grateful for his financial support of this case study.

I would also like to thank two of my workshop participants, Danica Koncar from the Vocational School in Kula and Dragana Curcic, from the Vocational School in Becje for writing down their view of the training from a participant's perspective.

"Reflection Learning" – An Experiment with a New Training Approach in Serbia ***(Executive Summary)***

The approach described here in vocational education teacher training for the implementation of reflection learning in Serbia stretched our over a period of one year. It was delivered in three steps in a five week program – a two-week teacher training seminar in April 2003, followed by two-week trial-run teaching situations in various vocational schools in Serbia in May 2003 and finished off with a one week teacher training seminar for future teacher trainers in March 2004.

The first workshop was a 10-day training course in a modular approach. The principle of reflection learning was used in a hands-on approach based on many examples from best practices of teachers in vocational schools and delivered through action-oriented methods. The workshop focused in four modules on didactics, methods, communication techniques in class and on grading and making assessments in reflection learning situations.

The teachers came from the 18 pilot schools of the Ministry of Education (MoES)- GTZ project "Reform of the VET-System in Serbia" and had been selected by MoE and the respective school directors based on their own expression of interest.

The second workshop in May 2003 focused on trial-run teaching situations in 9 of the 18 pilot schools of the MoES/GTZ project in Serbia "Reform of the Vocational System in Serbia", which took the same group of 18 participants into the day-to-day work of "reflection learning" (or in Serbian: "activna nastava") lesson planning in commercial schools in Serbia.

The whole workshop took place over a period of 2 weeks. In the morning of each day of the workshop a different pilot school was visited and one lesson (ranging from economics, business administration, commercial correspondence, accounting to Serbian language) was carried out by two participants. The rest of the group watched the lesson and after that the lesson was discussed with the whole group by reviewing the main principles of planning and carrying out the lesson as well as by looking at lesson alternatives. After each lesson the method of "Cooperative Reflection Counseling" was used for giving feed back to the teachers.

The principle of "reflection learning" was the guiding principle and the teachers in those 9 vocational pilot schools delivered this new way of teaching through action-oriented methods. This 10-day workshop in May apart from the trial-run teaching situations now also dealt with using different kinds of media (such as the Internet, stock market games, business games, films etc.) in different class situations in commercial education.

The third workshop in March 2004 - after the Ministry of Education and Sports (MOES) in Serbia had selected a number of teachers for future teacher trainers – emphasized looking at additional skills for teacher trainers. The focus in this one week workshop was threefold:

- To deepen the understanding of didactics for commercial lesson planning and get to know more didactic planning tools;
- To jointly prepare trial-run teaching situations and carry them out in schools and in micro-teaching (=in the presence of other teacher trainers and not in school) situations;
- To systematically get tools to evaluate, assess and also grade trial-run teaching situations.

The whole five-week approach was developed with a specific focus on active participation of all the participants, and the principle of learning by teaching in so-called "Trial-run Teaching Situations (TRLS)" was a key element in the workshop design.

Detailed training materials in a modular approach were developed and used in the workshop settings. The key in spreading out the approach was to use some of the 18 participants of the workshop group to go back into their schools and "ignite" the interest in Reflection Learning Practices in their specific schools. After each step of the workshop sequence, the participants suggested follow-up steps to be taken to spread out the approach to the participating pilot and other interested schools.

Evaluations and workshop appraisals showed very strong appreciation and satisfaction with the approach on the side of the participants. This can also be said by the moderator of this three-pronged workshop strategy when it comes to workshop participation and reflection learning practices in trial-run teaching situations.

However, it should be made clear at this point that teacher training is always an ongoing process and even a stretch of five weeks in teacher training can only looked upon as an appetizer and making a good start. This is why for the further implementation of this approach in Serbia as well as for trying it out in other countries a roadmap should be followed that takes up some of the learning experiences in Serbia and also emphasizes;

- Preparing teachers and trainers systematically for their jobs in schemes in vocational education and training in schools (in-service) and universities (pre-service),
- Designing new learning environments in vocational education and training that allow for more independence on the side of the learners, flexibility on the side of the program planners and relevance when it comes to curricula and learning materials,
- Make school-based vocational education more practical,
- Setting up national institutes of vocational education and training, and
- Integrating "life-long vocational training" in the institutional framework for vocational education teacher training, and learning in general.

1. Problem Analysis - the Challenge of Reflection Learning in Schools of Vocational Education and Training vis-à-vis a Changing World of Work

Teachers and trainers in vocational education and training do not operate in the vacuum and splendid isolation of our vocational schools. Employers, especially in the last 10-15 years have called time and again for teamwork and improved communication skills in the work place. These are proven factors in labor productivity improvement in companies, so it is only natural that firms have called for them in vocational education and training. It is not the "hard skills" of e.g. memorizing the four components of a good marketing-mix are, but the "soft skills" of developing marketing concepts in a team and defending them against a number of competent fellow students/colleagues. This kind of learning stresses comprehensive learning: planning, carrying-out, monitoring and evaluating. This new style of learning now practiced in industry has impacts on learning in vocational education and certainly also in teacher training for vocational education.

But it is not only the employers that have changed their way of looking at vocational education; it is also our students in vocational colleges who have different expectations when they come to our schools. It used to be that one program in vocational education and training would be enough for a whole lifetime. A little training and retraining could always be done on the job. This has changed dramatically.

Today, new technical as well as commercial and IT-contents come up almost every year, and the need for recurrent training -if not for second or third job careers - is omnipresent. The solution for many vocational students is to learn how to organize themselves and to organize their own vocational learning and look for teams and patterns of self-organization.

To my own surprise as a teacher and trainer with more than 20 years of experience, today's students sometimes come with up with far better solutions than we anticipate. That is not because previous generations of vocational students were not as smart as this one, but because current students in vocational education have discovered the enormous potential of teamwork and individual self-organization, and we as trainers are beginning to think more along those lines, too.

These new insights by employers, students, trainers and also curriculum developers have led to a vast restructuring process in vocational education in general and the issues – relating to teacher training - are:.

- Focusing on the relevance of in-service teacher training programs in vocational education for students, employers and teachers themselves;
- Forgetting the spoon-feeding of our own teachers and instead helping teachers to take their own process of learning-and-becoming-teachers into their own hands;
- Combining theoretical and practical aspects of teaching in learning situations that have real-life importance and are fun;
- Making use of team work in teacher training and turning it into a powerful tool for teachers in their vocational schools;

- Developing new “ways of learning” and setting up new "cultures" in grading and testing, since new testing systems should be consistent with new training systems and compatible with training.

The above-mentioned key problems in teacher training will be addressed in this paper by suggesting a new way of “Reflection Learning Practices (RLP)” , and it will be shown in this paper how they have been tackled in the vocational education teacher training programme in Serbia - in what I believe - a very creative and innovative way.

2. What are “Reflection Learning Practices (RLPs)” and why should we Train our Teachers in that way!

“Reflection Learning” is a new approach in vocational education and training which is based on whole cycles of learning. “Reflection Learning” as it is used in this report here refers to learning processes that are relevant for learners, that stress comprehensive and joint planning in groups, and that produce planning strategies that take concrete actions and finally evaluate the results. This "Reflection Learning " cycle has a number of new challenges especially for us as trainers.

Three reasons for using “Reflection Learning” are given here, looking at it from the aspect of the clients of vocational education, the students, from the aspect of who is going to implement it, ourselves, the teachers and taking a demand-driven view, looking at why the employers like it.

Why is Reflection Learning recommended for students?

The only safe prediction that can be made with regards to future job profiles is that they will change. Present professional job know-how gets obsolete in ever shorter periods. The pass-outs of the vocational training programs cannot always immediately come back and join the training system for another half year. So the key aspect is to qualify them to organize their own learning-on-the-job and prepare them for life-long learning. They need to learn technical and vocational contents without too much dependence on a trainer. Since students have to learn how to organize themselves, trainers and teachers must learn how to teach with a minimum of guidance.

Simultaneously with the introduction of new technologies, the labor markets are calling for new “key qualifications”. Subsequently in the past, this has led to a misunderstanding that by taking up the new technical contents (such as e.g. pneumatics, electronics, CAD/CAM or CNC) as training topics in vocational schools, the challenges of the employment system would have been answered by the training system adequately. But soon it had become clear that by focusing on technical issues only without major innovations in the training innovations this would result in “the sale of old wine in new bottles”.

In a way, in lecturing, the student was expected to learn the training essentials under conditions which can be compared to students expected to learn driving a car by continuously remaining in the passenger seat during training!

Reflection learning methods on the other hand do put the student in the driver's seat and the use of innovative methods in training young people is therefore a very crucial point that must be combined with new technical contents.

Why Reflection Learning is recommended for teachers and trainers?

For teachers and trainers working in advanced training with a high pace of innovation it will become more difficult to stay abreast with their students in terms of technical know-how. Recurrent further training for trainers will not solve this dilemma completely, because the learning ability tends to fade with growing age.

Thus, it is more important to keep pace with new developments in didactics and methodology of vocational education and training. Changing his/her role from a lecturer dispensing information to a moderator of team work (holding some of his/her information back) offers the chance that students make technical progress even beyond the technical know-how of the teacher. To the surprise of the trainers who start using this methodology the results of some teams are sometimes much more sophisticated than expected by the trainer. This is due to the mental potential of teams. As in quality circles, the success of the team does not depend mainly on the technical expertise of the trainer.

As long as it was regarded as normal that an engineer or an economist lectured on his technical know-how and that his/her audience just memorized what he/she said and demonstrated, the mastery of methodology meant that the trainer was able to lecture. His/her ability to make students understand was less valued than the high level of technical or economic know-how. In order to generate the broader learning effects of modern vocational education and training, however, the trainer's capabilities in coaching often matters more than his/her technical expertise.

Furthermore, in Reflection Learning, teaching and training are no longer limited to teaching and lecturing only, but other teacher and trainer functions, such as counseling, educating, organizing, grading and innovating become an integral part in each training program for teachers and trainers.

With conventional vocational education and training, for too long, we made our students develop a brain that acts like a computer with a small processor and a huge memory, but what they actually need to succeed in today's world of work (as much as we need in our computers) is a brain with a much bigger processor unit while the memory capabilities could be much smaller!

Why Reflection Learning is wanted by employers?

Employers have realized that the nature of technical know-how for solving enterprise problems has changed:

- The ability to think in functional contexts now matters more than knowing vast amounts of isolated details,
- Systematic and analytic approaches towards new problems are more appreciated than experience with old patterns, and
- Precise planning and anticipated trouble-shooting has become more important than quick trial and error actions when the problem occurs.

The lecturing of information ("spoon feeding") in connection with testing the memorizing ability ("pseudo applications") produces an employee who is poorly prepared to meet the present job requirements in modern sectors of industry and the whole service sector offering maintenance and repair.

The new kind of training in both schools and enterprises originates from the way quality circles operate in industry. The transfer to the field of training was boosted and promoted by employers who were no longer satisfied with the human training product which the conventional training system offered to them. In other words: the changing labor market requirements forced the training system to follow. And, this is not only true for Germany, where these new approaches have been developed, but also makes a lot of sense in development projects, where reforms in vocational education and training are tackled, for example in Serbia.

3. A Case Study of a Successful Implementation of Reflection Learning

3.1. The Setting of Vocational Education in Serbia

In Serbia, after the political transformation in October 2000, the main problem in vocational education and training seemed to be the transition from vocational education and training into the labor market, indicating enormous demand-supply mismatches. On the one hand there was irrelevant vocational education and training providing school leavers only with insufficient skills and competencies, and on the other hand there was the labor market, with its precise demands, skill requirements and competencies. Both systems seemed to exist parallel to each other and were not trying to match these different expectations.

Directly related to the problem there was evidence that vocational education and training in Serbia was not demand-oriented enough and that it was also too theoretical, which can be seen in the more than 500 professional profiles in the country and also in vocational curricula of all kinds.

The qualification of teachers and trainers in vocational education and training in Serbia with respect to methods, content and technology is outdated and developments of the last 10 years, for example in Europe, have not yet been incorporated in Serbia. Pre-service teacher training as a means to prepare future teachers for the variety of tasks in vocational education does not exist in Serbia.

On the other hand, there is a high demand for qualified people in the private sector as well as in public administration, who will be able to actively participate in the transformation process and who will possibly be helpful in starting new businesses in Serbia's transitional economy as well as supportive in improving the competency level of the country's labor force in the field of administration.

The German Technical Cooperation (GTZ) is currently working very closely with the Serbian Ministry of Education and Sports (MoES) in the reform of vocational education and training by:

- supporting MoES in restructuring VET in Serbia,
- gearing VET programs in selected regions towards growth sectors with employment potential and
- enabling selected institutions to develop demand-oriented programs in commercial education and qualifying teaching staff and trainers.

These initiatives cover the development of closer linkages with enterprises in services, the bank and the wholesaling sector. National and regional bodies that equally focus on the relevance of the supporting ambience for vocational education and training have been started.

So far, in particular, commercial apprenticeship programs, curriculum development following the DACUM (Developing a Curriculum) approach, and teacher training programs oriented to the introduction of reflection learning methods have been started and 18 pilot schools all over the country have been selected to implement the first wave of these reforms.

The teacher training component provided the basis for this case study of a successful implementation of Reflection Learning practices. For this specific teacher training programme 18 teachers from the 18 pilot schools had been selected for this workshop. They came with a variety of special subjects such as economics, business administration, accounting, mathematics, business law, commercial correspondence and Serbian language, which they taught in their own schools.

3.2. Description of the Approach Taken in Serbia

The vocational education teacher program in Serbia as described here lasted four weeks in two blocks of two weeks each (one in April and one in May 2003).

The first two-week block covered work in a seminar on the first four modules. The second two-week block dealt with the fifth module and with trial-run teaching situations carried out by 2-3 teachers and group observation by the rest of the teachers and took us all over Serbia to 9 different cities in 10 days.

The five modules were:

Module 1: How Do I Define My Own Didactic Concept in Business Administration and Economics?
Module 2: Selecting Methods that Fit Me!
Module 3: Professional Communication – How Do I Implement This in Class?
Module 4: Making Assessments and Judgments as a Teacher, Promoting Students and Supporting Colleagues
Module 5: Media – Useful Implementation of Learning Devices in Commercial Education

Each of the five modules covered 10 units of 90 minutes (4 units of 90 minutes a day) and spread over a period of 2 ½ days, so that the first 4 modules could be offered in the first two weeks of the seminar. For a more detailed list of the modules see Annex 1: Module Work. There was a big "group homework assignment" after the completion of the first two weeks, which was the preparation of the trial-run teaching situations within the setting of the second two-week training programme.

The fifth module was offered in the afternoons of the second block with the school visits, the trial-run teaching situations and the subsequent discussions taking place in the mornings in different schools all over the country.

Table 1: Organization of Teacher Training

Days/Weeks	**Week I**	**Week II**	**Week III**	**Week IV**
Monday morning	Module I, Unit 1 and 2	Module 3, Unit 1 and 2	School A: School visit, trial-run teaching situations and discussion	School F: School visit, trial-run teaching situations and discussion
Monday afternoon	Module 1, Unit 3 and 4	Module 3, Unit 3 and 4	Module 5, Unit 1	Module 5, Unit 6
Tuesday morning	Module 1, Unit 5 and 6	Module 3, Unit 5 and 6	School B: School visit, trial-run teaching situations and discussion	School G: School visit, trial-run teaching situations and discussion
Tuesday afternoon	Module 1, Unit 7 and 8	Module 3, Unit 7 and 8	Module 5, Unit 2	Module 5, Unit 7
Wednesday morning	Module 1, Unit 9 and 10	Module 3, Unit 9 and 10	School C: School visit, trial-run teaching situations and discussion	School H: School visit, trial-run teaching situations and discussion
Wednesday afternoon	Module 2, Unit 1 and 2	Module 4, Unit 1 and 2	Module 5, Unit 3	Module 5, Unit 8
Thursday morning	Module 2, Unit 3 and 4	Module 4, Unit 3 and 4	School D: School visit,	School I: School visit,

			trial-run tea-ching situations and discussion	trial-run tea-ching situations and discussion
Thursday afternoon	Module 2, Unit 5 and 6	Module 4, Unit 5 and 6	Module 5, Unit 4	Module 5, Unit 9
Friday morning	Module 2, Unit 7 and 8	Module 4, Unit 7 and 8	School E: School visit, trial-run tea-ching situations and discussion	School J: School visit, trial-run tea-ching situations and discussion
Friday afternoon	Module 2, Unit 9 and 10	Module 4, Unit 9 and 10	Module 5, Unit 5	Module 5, Unit 10

The five modules were structured according the following line of thinking:

Module 1: How Do I Define My Own Didactic Concept in Business Administration and Economics?

Training work in didactics in Serbia put the teachers into the situation of students and encouraged them to develop lessons that are age and school career appropriate. For example, the "Economic Principle" as a subject was presented differently in an apprenticeship class for future wholesalers clerks in Serbia than in a class for full-time commercial college students.

In the training programme, curricular content in Serbia was always translated into lesson topics that strongly interested and stimulated the particular students: For example, which lesson topic is more likely to motivate learning: “The Equilibrium Price in Quantitative Theory”? Or “The Price Does it – We are Setting a Sale Price for our own Students’ Newspaper” - after the students have been through planning, designing, advertising for and preparing the lay-out of their own newspaper in previous lessons in economics and business administration!

Questions that teachers in this session had to address were:

- How do students learn and what needs to be done to support this?
- What is the general vocational and educational mandate of my school?
- Where may the students have been exposed to specific contents before this lesson (e.g. teaching marketing implies thinking about - before the lesson - where the students have been exposed to it already and then finding good examples accordingly)
- What is the relevance of this specific topic for my students in their future? For example, when I teach the contract of sale, how does this relate to my students in apprenticeship classes or full-time students who have never had work experience?
- How can I make content very concrete and tangible? What should the examples look like and how do I structure the lesson so that my students are motivated?

- What maybe a teacher's (also hidden) agenda in defining content, for example in economic policies such as the comparison of economic systems in Serbia ?

The development of the didactical concept of each trainer was an essential part in the training workshop and received a very high importance. In a way, all the other later essentials have a supporting function for this one.

Module 2: Selecting Methods That Fit Me!

The objective of this essential was to build up methodological competencies in teachers by presenting different kinds of methods that can be used in teaching in commercial schools.

In doing this teachers are viewed as moderators in learning processes for self-organized team work and the teacher's job as a coach is to make sure that permanent communication takes place among the participants.

The Serbian teachers perceived the content of this field of learning "methods" as an experienced work form, in other words saw methods in their training program as carried out by their teacher trainer. This is considered particularly important, because methods are believed to be used better after having seen them in operation first before attempting to use them in one's own setting.

In particular, the teachers worked on what is considered the basic repertoire in teaching in vocational education:

- Phasing a lesson;
- Using group and partner work in a class comfortably;
- Motivating different groups of learners;
- Preparing different kinds of learning arrangements;
- Steering class activity;
- Offering patterns of learning; and
- Reflecting and debating together with vocational students.

They were also exposed to increasingly sophisticated methods such as case studies, projects, and moderation cycles.

Module 3: Professional Communication – How Do I Implement This in Class?

Studies in Europe show that it is still the case in vocational schools that 60-80% of all the words said come from the teachers rather than from the students. It is no wonder then that some students graduate with communication deficiencies. [1]

[1] Of course, communication skills are also dependent on many other things, such as class and educational level of parents.

Therefore, also in this course in Serbia it was regarded as very important that teachers reassess their own communication competencies and come to a professionalization of their communication skills in the light of the above. Reflection and diagnosis competencies of teachers were also supported in this essential.

The objectives in this essential were to

- Learn to be able to take a role in discussions;
- Structure the tasks;
- Listen actively and carefully;
- Divide into groups and design meaningful tasks for each group;
- Provide and receive feedback; and
- Summarize results in groups.

When referring to professional communication, it is always better done than talked about. This is why communication exercises were also offered here in a variety of situations. In this essential, teachers were also increasingly exposed to more process oriented communication methods such as, for example, working comfortably with the tool of a future lab.

Module 4: Making Assessments and Judgments as a Teacher

Every one of us has had the experience in school of how painful it could be when we felt that our teacher did not grade us correctly! This is why particular emphasis is placed on dealing with making judgments and assessments as a teacher in Reflection Learning.

In this essential the Serbian teachers learned how to put together written tests and check achievements in

- Learning;
- Methodical; and
- Social competencies.

In this essential structured help was also given to them as to how to

- Set up tests covering the same topics for different age groups;
- Cover all the competencies laid out in the previous lessons;
- Deal with the aspect of turning competency achievements into “gradable” tasks;
- Return tests with a maximum of “learning” to all the students in the class.

However, it is not only the grading for Reflection Learning that they learn: at least as important seems to be learning how to support and promote those students who have not done so well. Special emphasis is given to ways to deal with under performers in vocational classes and how to get them back into the “main stream” of learning.

In other words, teachers in Serbia learn how to put together written tests, grade them and return them to their class following certain guidelines. They also learned how to develop alternative grading procedures, for example when it comes to making assessments about group or project work. And they developed criteria on how to assess and judge reflection learning of their students, using qualitative criteria in measuring different competencies.

They learned about typical misjudgments of vocational teachers, and they learned how to prepare written reports about students and how to defend them in grading conferences in their schools.

Module 5: Media – More Than Just Learning Devices

In the training course the use of media in commercial schools is derived from their usefulness and necessity for learning with vocational students. Media are considered useful and necessary, when the following criteria are met:

- Media are tools in a process of getting students to learn better;
- Media are no means in itself;
- Media can be used to shape the problem analysis in a lesson;
- Media can be used to better visualize solutions and show transfer of competencies gained in the lessons; but also
- Good media usage alone never makes good teachers!

In principle, media should be selected or prepared by the trainees themselves (if possible). The content of this essential is *how* and *when?* to use media such as blackboards, overhead projectors, information sheets, school books, flip charts, even the Internet and others. Using media is considered to be part of our job and every teacher should be comfortable using his repertoire of them.

In the second part of the teacher training program video was used in school to tape case study teaching situations and discuss them afterwards vis-à-vis the following video usage criteria for trial-run teaching situations, such as:

- Organizing recognizable phases in teaching;
- Setting up learning arrangements for the students;
- Communicating with students;
- Using different strategies to make students participate;
- Promoting competencies in teaching situation;
- Dealing with disruptions in class;
- Relating with the students (such as appreciation and understanding).

3.3. Lessons Learnt

Looking back as a moderator of this training workshop, I would like to point out the following few things.

First, it was striking to see how important the first module –didactical analysis - was for all the participants and how we always kept coming back to it in the whole training program like a red thread.

Secondly, most of the used teaching methods were new to the participants and therefore created a lot of interest, especially after seeing them being used in the seminar itself. The question of how the methods could be used in the Serbian vocational schools was always answered with a lot of examples given by the participants. A kind of an “eye-opener” in this respect (for the participants as well as for me) was the use of the future lab method in structuring future teacher training program for teachers in commercial education in Serbia. This phase showed how much (hidden) creativity there was and how well those teachers active and present in this seminar knew what kind of activities needed to be taken .

Thirdly, assessment of reflection learning techniques was covered in the fourth module and many practical examples were given. However, it became clear in the coursework of that module and it was also mentioned late in the participants’ evaluation that much more of assessment techniques were needed in future teacher training for the implementation of Reflection Learning.

In the trial-run teaching situations of the third and the fourth week, the quality of the lessons presented was generally good. Many lessons seen had already all the dimensions of reflection learning processes in them. It was particularly interesting to see the students enjoy their own teachers’ new approaches in practice and as a result their (maybe higher) motivation to learn, because simply they (the students) were so much more involved in their own and learning process. This has been pointed out to me by a number of interviews, which I conducted with students after the trial-run teaching situations.

The public interest (newspapers, radio, TV and local politicians) was there wherever we showed up with our “teacher training on the road”. However the downside of that is that the public expectations in Serbia might have expected too much too quickly. Teacher training is not something that gives instant results in 2x2 weeks. It may change attitudes and might send teachers on their own learning curve, but this of course was only a first “appetizer” and sustainable structures of teacher training will still have to be set up later.

3.4. Results from the Participants’ Evaluation

Participants’ evaluations were made after each two-week course. In general, both courses were very much appreciated by the participants. According to the participants’ evaluation, the following things were said about the first course:

- very comprehensive modular approach;
- commercial contents chosen were very appropriate for VET teachers in Serbia;
- chosen methods were interesting and their application became always immediately visible;
- 100 % active teaching;

- learning to learn and teach in a different way;
- useful and applicable for teaching in VET schools in Serbia;
- completely new;
- realization of reflection learning is absolutely possible in Serbia;
- perfect also in teaching Serbian language, literature and foreign languages;
- constant feedback to our school work: Can you use it in your teaching process?
- worth trying!

The second leg of the four-week programme was as appreciated as the first one. By being put in trial-run teaching situations, participants remarked that they

- Gained significant experience on how reflection learning can be implemented in vocational schools;
- Approved of tailor-made seminar structure to the current state of vocational education in Serbia;
- Were able to experiment with reflection learning techniques in schools;
- Reached an interesting public by drawing lots of attention to reflection learning experiments in schools;
- Needed curriculum changes for better integration of reflection learning;
- Gained confidence to work as a change agent in their own schools;
- Wanted much more of the same.

3.5. Spreading out the Approach – Working with the Trainers

The key in spreading out the approach was to use some of the 18 participants of the workshop group to go back into their schools and ignite the interest in Reflection Learning. After the first training program in Serbia, the workshop group - in a participatory planning exercise - suggested the following next steps to be taken to spread out the approach to the participating pilot schools, which were then carried out immediately:

- Information of other teachers about reflection learning methods in 18 pilot schools through teachers' conferences;
- Plan group school visits, practical teaching sessions and seminars in May 2003 for the same participants in 9 selected pilot schools;
- Translate relevant German literature on reflection learning;
- Carry out similar seminars – with the workshop participants being the moderators at their own schools - for other teachers from pilot schools;
- Select multiplicators for training of teacher seminars (ToT);
- Organise ToT seminars;
- Provide insight on German teacher training through a study visit to Germany;
- Organise e-mail chat rounds for multiplicators for exchange of ideas.

The second workshop in May 2003 was followed by these steps that the participants agreed upon:

- Plan a sequence of one-day workshops to be held in September and October at the pilot schools to be held by those teachers that will be selected by MoE;
- Draft articles for the monthly journal of MoE on selected issues of reflection learning and reflection learning principles, to be done by selected participants from this workshop and supported by GTZ;
- Select multiplicators for training of trainer seminars (ToT) ;
- Organise ToT seminars with those moderators selected by MoE, carried out by Michael Axmann;
- Think about a handbook for "reflection learning" lesson planning, (to be done jointly among Michael Axmann and moderators by the end of the year).

3.6. Making the Approach Sustainable – Organizing Training of Trainers (ToT) Workshops

In the following months most of the initiatives mentioned in 3.5. were pursued and the idea of introducing reflection learning practices in vocational schools got more and more popular also at the level of the implementing schools and the Serbian translation of reflection learning "Activna nastava" became a household word and much discussed issue in Serbian vocational schools.

In a third step (after the first two initial workshops in 2003) the Ministry of Education and Sports (MOES) in Serbia selected a number of teachers who had undergone training in the previous workshops to now turn them into teacher trainers. In March 2004, these future teacher trainers got a further training workshop, in which they were prepared for their new tasks.

The focus in this one week workshop was threefold:

- To deepen the understanding of didactics for commercial lesson planning and get to know more didactic planning tools;
- To jointly prepare trial-run teaching situations and carry them out in schools and in micro-teaching (=in the presence of other teacher trainers and not in school) situations;
- To systematically get tools to evaluate, assess and also grade trial-run teaching situations.

More training for the future teacher trainers will have to come and the MOES is currently thinking about ways and means to turn this into a long-lasting new initiative. It will be interesting to see, how the Serbian government will maintain reflection learning practices in its vocational schools in the future and which mechanisms it will set up to meet this goal. One positive side effect will certainly be coming from the currently planned National Institute for Vocational Education and Training, which in intended to have one department entirely focusing on in-service teacher training.

4. Defining a Road Map for Starting Reflection Learning elsewhere – it will work!

At this point some readers might say, this works in Serbia and it also did in Germany, but there is no guarantee that it might work elsewhere. There is a number of reasons that it might work anywhere, but there are also a few prerequisites that need to be observed before running teacher training programs in reflection learning.

4.1.Organizing Reflection Learning with Teachers – a Joint Effort

On the following pages a set of recommendations will be given that might serve as guidelines for setting up similar programs in vocational education and training elsewhere. However, they would have to be further analyzed and specified for each individual country pursuing them.

I. Prepare teachers and trainers better for their jobs, by:

- ✓ Setting up pre- and in-service teacher facilities for future teachers in vocational education and training,
- ✓ Helping teachers and trainers to take their own process of learning-and becoming-teachers into their own hands,
- ✓ Combining theoretical and practical aspects of teaching in learning situations that have real-life and real-work importance,
- ✓ Emphasizing a legal and didactical framework in teacher training and the joint role of vocational schools, vocational education teacher training institutes and enterprises in teacher and training of trainers, and
- ✓ Making frequent internships and/or initial apprenticeships in enterprises mandatory for vocational school teachers.

This could be done by using new and innovative approaches in teacher and instructor training in vocational education and training and should also be supported by strengthening the school management of vocational schools and colleges in countries interested in making those changes. It should always be supported both on the university level (pre-service teacher training) and the school level (in-service training) and it should be kept in mind that this usually does not show immediate results.

II. Design new learning environments in vocational education and training that allow for more independence on the side of the learners, flexibility on the side of the program planners and relevance when it comes to curricula and learning materials, by:

- ✓ Qualifying students in vocational education and training to organize their own learning-on-the-job,
- ✓ Designing flexible and short cycles of training schemes that directly respond to training needs,
- ✓ Seriously shifting the role of the teachers and trainers away from lecturing towards coaching, and

- ✓ Trying to make curriculum development and the design of learning materials a joint process between ministries, training institutes, vocational schools and associations of enterprises.

This could be done by putting out vocational students more in the “driver’s seat” of their own learning e.g. when it comes to dealing with complex tasks such as designing marketing concepts or planning routines for CNC machines. Vocational education and training has been for too long of a time been like teaching our students how to drive without ever putting them in the car. This is clearly a whole rethinking process of what vocational education and training should be all about and it does not happen over night.

III. Make school-based vocational education more like general education in many ways, by:

- ✓ Making the content in vocational schools more general,
- ✓ Ensuring that young people learn how to solve problems, work in teams, be enterprising and creative through the way they are taught,
- ✓ Introducing more soft skills such as languages and communication skills,
- ✓ Providing sufficiently wide skills,
- ✓ Ensuring that young people get direct opportunities to learn about the nature of the economy and the world of work, and altogether
- ✓ Making vocational education and training (VET) tracks less of a dead end.

This could be done for example - such as in Serbia – by working with Simulating Enterprise Offices, SEOs in vocational education and training. These SEOs are simulation processes where students are guided through a process of actually setting up small businesses and developing products and services.

IV. Set up national institutes of vocational education and training for better:

- ✓ Adapting the vocational education and training system to the needs of the knowledge society,
- ✓ Supporting efforts to the transparency and employability of VET,
- ✓ Updating initial and continuing vocational training e.g. by developing new vocational qualifications,
- ✓ Developing scenarios for future development of vocational education and training, and
- ✓ Conducting vocational training research with a view to identifying correlations between technological and labor market developments.

This could be done for example by looking at organizational structures and task descriptions of similar national institutes. One could also make cross comparisons of recently established institutes of vocational education and training for example in certain transition countries such as Hungary and Slovenia and look at their institutional set up and draw lessons for other countries in the region interested in setting up similar cases.

V. Integrate "lifelong vocational learning" in the institutional framework for vocational education and training, by:

- ✓ Emphasizing "learning to learn" skills in vocational education and training,
- ✓ Focusing on team work capabilities,
- ✓ Mobilizing resources for making lifelong learning opportunities more widely available,
- ✓ Ensuring collaboration among a wide range of partners and stakeholders,
- ✓ Developing policies for the recognition of all forms of lifelong learning, including informal and distance learning, and
- ✓ Designing guidance and counseling for lifelong learning.

This could be done by looking at some national systems in vocational education and training that take these reform initiative into consideration. Some countries currently working on this include Germany, Austria, Switzerland, Denmark, the Netherlands, and Australia.

If and how this can be integrated in schemes of vocational education and training and skills development also in developing and transition countries to become "bridges to further and life-long learning" will have to be seen in individual planning processes in countries willing to experiment with this.

4.2. Trial-run Teaching Situations and Counseling

One of the keys to successful in-service teacher training on the teaching level are Trial-run Teaching Situations (TRTS). Without them no teacher training is true and my hypothesis is that no changes will happen at all, unless TRTS are applied. This is why they are mentioned separately here as a "key ingredient" for successful implementation of reflection learning.

TRTS can be done in a number of different setting. In Serbia they were carried out by groups of 2-3 teachers and were held at their own schools in the presence of the directors of the schools, interested teachers from that school and other schools, and in the presence of the teacher training group.

The important thing is that they are always "teaching experiments", where the teachers had the right to show where they are at in their development of reflection learning processes and yes, they had the right to make mistakes.

TRTS in Serbia followed certain rules. Setting up and following up on these rules is also highly recommended for other country settings. The teachers, prior to the teaching situation, hand out a written preparation to all the participants. Different ways of written preparations for TRTS exist. The preparations are in writing and must always include some remarks about the specific class, the objectives of the lessons, didactical and methodological explanations for that specific lessons and literature used.

Observing participants should watch carefully and take notes for the following discussions of the trial-run teaching situations. Taking notes can either be done individually or using a format for recording trial-run teaching observations, which is attached as Annex 2.

When correctly practiced, trial-run teaching situations give invaluable quality feedback to teachers that will enhance their learning and give orientation to their improvements as vocational teachers.

My experience in Serbia showed that TRTS lost some of their "exam character" due to this frequency and varied settings, and hence teachers in the course of the two-week programme became more relaxed about them and looked at them more as learning opportunities.

This is positive, because the real learning takes place in the counseling situations after the case-study teaching situations! Up to this point the teachers have planned and carried out a lesson and now they are open to feedback. Feedback can be given in many different forms and it can also be done in different settings. It is of utmost importance that – in the course of this counseling process - the teacher gets into the position that she/he comes to realize alone what to do differently next time. Once again, if only giving advice here is practiced (instead of counseling!), then teachers will only accept this advice for the duration of the TRTS and will not change habits.

If, on the other hand, the teachers feel comfortable in these peer situations, then they may themselves come up with their own observations, like: "The students were so passive in participating. Do you think that could relate to my planning things too much, instead of involving them in the planning process more?" These kinds of questions occurred more and more in the course of the teacher training programme in Serbia and more so in the last week after the group found out that this kind of counseling was good for all of them.

If this is the conclusion of a talk at the end of TRTS, the teachers have learned indeed much more than by having received tons of advice by more experienced teachers of what to do better in this or that situation!

4.3. Evaluation Mechanisms by Teacher Trainers - Continuous Improvements

In this chapter, some monitoring and evaluation mechanisms will be described that can be done to improve and assess the quality of teacher training, some of which have been done in Serbia. In a way they can also be seen as a way of quality control, rounding off a whole package of teacher training..

“Jour fixe”

The “jour fixe” is a regular meeting of all the teacher trainers and a way of giving feedback among the teacher trainers and providing a forum for ongoing work.

For example, half-day meetings could have the function of critically monitoring the ongoing training cycle and providing a forum for discussion. For each jour fixe, 4-6 teacher trainers can sign on as responsible moderators; they are in charge of clarifying the agenda with their colleagues, moderating and documenting outcomes. Meetings could focus on, e.g.:

- Implementing new legal framework for teacher training into daily work;
- Identifying training needs for teacher trainers; and
- Developing identical criteria for good lesson planning and implementation.

Further Training Programs for the Teacher Trainers

Training programs could focus on e.g.:

- Learning how to do improve “Cooperative Reflection Counseling”;
- Working with new media (Internet, Multi-media);
- Developing special learning promotion programs for weaker students;
- Using scenario techniques and future labs comfortably;
- Identifying “creative ways” to release organizational duties in schools

These training programs could take place outside the schools, and outside experts help. They take place a minimum of once or twice a year and last a weekend or a couple of workdays.

Preparing New Teacher Trainers

Assuming that there would be something like a career path in becoming a teacher trainer, these people would usually need training in order to be equipped to carry out all the tasks of a teacher trainer competently.

A typical preparatory training for new teacher trainers, for example, could consist of 4-6 hour sessions each, for example in:

- Developing criteria for a “good” teacher trainer;
- Discussing and implementing counseling situations after trial-run teaching situations;
- Dealing with feedback;
- Accompanying written theses by junior teachers;
- Writing final reports for our teachers; and
- Assessing in an exam situations

Evaluations by Teacher Trainers and Students

This evaluation can always be done on a voluntary basis by teachers who have been through the program. Teachers should describe their points of view, their experiences and their suggestions for future changes of the program. I personally consider particpants feedback as a way of continuously improving teacher training courses. This is way I asked two of my teachers to give one. A flashback by two former trainers in my work in Serbia is given in Annex 4. The same could be done with students who ‘experience” their teachers, when they come back form teacher training and are sometimes surprised to see what the training has done to them and how it will affect their new learning situation!

Annex 1: The Five Modules of the Teacher Training Course

Module 1: How Do I Define My Own Didactic Concept in Business Administration and Economics?

1. Introduction of Participants and Expectation Check
2. Presentation of Course Work and Literature and Development of Criteria for Good Lessons
3. Developing Topics in Our Lessons
4. Lesson Preparations under a Perspective
5. What is a "Didactical Analysis" in Economics?
6. Didactical Work in Concrete Learning Situations
7. Competencies and Qualifications – Where are the Differences?
8. Structural Analysis for Lessons and Developing Guidelines for Observing Lessons
9. Micro-Teaching: MT Carries Out a Model Lesson in Marketing
10. Group Analysis and Discussion about the Micro-Teaching Experience

Module 2: Selecting Methods that Fit Me?

1. Gathering Methods for Lessons and Presentation of a Specific Case Study
2. Case Study "Industrial Enterprises in Competition"
3. Contd.
4. Contd.
5. Discussion about the Case Study and its Usage in Schools
6. Didactical Annual Planning and the Implications on Methods
7. Introduction into Simulated Enterprise Offices
8. Planning of an Enterprise Visit with a School Class
9. Working in a Simulation (Part 1): Working with Fictional and Real Enterprises
10. Working in a Simulation (Part 2): Division of Tasks in Simulated Enterprise Offices

Module 3: Professional Communication – How Do I Implement This in Class?

1. Professional Communication – What is that?
2. A 5-phase model of communication ability and its first Phase: "Developing rules for our daily work in commercial classes!"
3. Second Phase with an Info-Market-Place introducing the four main departments of a whole sale company
4. Third Phase with Station Briefing for the Management of a Model Enterprise
5. Argument Stations in Enlarging the Product Range of a Model Enterprise
6. Short presentation of more complex communication models and introduction into a Future Lab with the Topic: Teacher Training in Serbia
7. First Phase of the Future Lab: The Critique Phase
8. Second Phase of the Future Lab: The Phantasy and Utopian Phase
9. Third Phase of the Future Lab: The Realisation Phase

10. Discussion of Transfer Potential of these Experiences into our Schools

Module 4: Making Assessments and Judgments as a Teacher, Promoting Students and Supporting Colleagues

1. Analysis of formal curricula for the Assessment of Achievements in Commercial Education
2. Development of Assessment Criteria for Crediting Reflection Learning
3. We develop Class Testes in Reflection Learning!
4. ….. and Return them to our Class!
5. Assessment of Oral Contributions in Reflection Learning
6. Assessing Group Work
7. Self-assessment by Students – is that possible at all?
8. Cooperative Reflection Counseling Part 1: Problem in Teacher Training Using Group Synergies
9. Cooperative Reflection Counseling, Part 2: Carrying out a Cooperative Reflection Counseling Session with the Group Participants
10. Assignment of Trial-run Teaching Situations and Explanation of “Homework” for the second two-week workshop

Module 5: Media – Useful Implementation of Learning Devices in Commercial Education

1. Overhead projector, Black Board and other Media in Commercial Education
2. Preparation of a Strategic Game in Economics (POLIS) using Videos and Production Forms
3. Didactical Annual Planning after POLIS
4. Varieties of Working with School Books in Economics
5. Using Films in Classes of Business Administration
6. The Personal Computer in Vocational Education
7. Commercial Correspondence and the Internet
8. Dealing with Students’ Expectations and Media
9. Working with a Stock Market Game in Commercial Education
10. Preparation of a Stock Market Game in Serbia

Annex 2: Form for Recording Trial-run Teaching Observations

Trial-run Teaching Situation Observations with Ms./Mr. ……………	
On	Lesson
In	Topic
Class	

1 Planning the Lesson

Class Situation

Didactic Decisions

Selection of Content
- Reduction
- Setting priorities

Objectives
- Interdisciplinary
- Competency-based
- Oriented towards real life and employment
- Educational

Process Planning

Intended Students' Independence

Articulation

Work Forms

Media and materials

Learning Success Control

Innovative Potential

Conclusion for Planning Competency: **Didactic Competency**

2. Implementing the Lesson (Content)

Recognizable Phases

Independent planning of students

Shaping out objectives

Independent carrying out by students

- Appropriate level for students
- Content correctness
- Setting priorities
- Oriented towards real life and employment

Independent assessment by students

Learning Success Control

Conclusion for Implementation Competency (Content):

2. Implementing the Lesson (Methods and Communication)

Learning Arrangement
(Training, Lecture, Project)

Social Class Activity
(Group, Individual, or
Partner Work)

Didactic Function (Exercise,
Transfer, Application, Control etc.)

Patterns of Learning

Communication Competency

- Communication structure
- Clarity and Style
- Modulation

- Division of communication between students and teacher

Media and material usage

Student Participation and means to make students participate

Conclusion for Implementation Competency (Methods And Communication):

3. **Teacher Activity**

General Behavior/Activities
(Security, Calmness etc)

Promotion of

- Self-orientation
- Methodical competency
- Learning competency
- Social competency
- Morale
- Communication competency

Activities in disruptions

Educational competency

Relation with the students
- Appreciation
- Understanding
- Emotions

Conclusion for Teacher's Activities: **Pedagogical and social competencies**

Annex 3: "Cooperative Reflection Counseling" (*Kollegiale Praxisberatung*) – Discussing Trial-run teaching Situations Using Group Synergies

In the Serbian teacher training experience Cooperative Reflection Counseling was structured in six phases plus an agreement both at the beginning and at the end. The agreement at the beginning set the tone for the counseling and identified seating arrangements, promised total discretion and agreed on the moderators.

In phase 1, the trial-run teaching group always has the first shot at looking back at the lesson and explain the thoughts the group had prior to starting the lesson, what went as planned, what went well and what not so well.

In phase 2, the audience responded. In this phase only positive feed-back was allowed.

In phase 3 the trial-run teaching group seeking counseling got other feedback from the rest of the group. The participants could give all kinds of feedback and they could also refer to more formal remarks about didactical and methodological issues that they might have written down during the lesson, e.g. also on their observation sheet (Annex 2). It was very important in Serbia that the trial-run teaching groups got plenty of chance to respond especially to the more critical remarks.

Phase 4 raised other perspectives and multiple meanings that resulted from the problem layout. The participants came in with sentences like: In your position I would …; I make the hypothesis that …; I have a wild thought …etc.
It was important in this phase that everything went and nothing was forbidden!

In phase 5 the whole team developed alternatives. Helpful were sentences like "I as the teacher, … student, … teacher trainer, … director, … mother, … chamber of commerce representative would do …". The group was supposed to come up with a lot of alternatives and new patterns. The trial-run teaching group should then pick out what suited them best and also gave a feedback to the group.

In phase 6 the group decided what was good for them in that situation and which alternative were to be taken over in their future repertoire for reflection learning teaching. In Serbia, we found out that a role-play trying out these new habits at the end of this phase was good for exercising new patterns before going out into school routine again.

The final agreement was always helpful for the teaching team, because a certain degree of commitment was made. A sentence like "I am going to try it out and I will let you know next time!" was good when it was wrapped into questions like:

- Who does this with whom?
- What exactly do I want to do?
- How do I want to do it?
- When and where will I do it?

Annex 4: Flash Backs

Looking Back and Looking Ahead, Danica Koncar, Kula Commercial School, Serbia

I was one of 18 participants in the 4-week seminar „Reflection Learning – Didactics and Methods“ which took place in two legs, one in Kikinda, Serbia from March 1-13, 2003 and the second one in 9 different cities in Serbia from May 12 –23, 2003. Michael Axmann was our teacher trainer.

My previous work experience as a teacher can also be summarized in two phases: after visiting the Faculty of Economics in Belgrade and working in departments of accounting and controlling in my country, I started my job as a teacher in a commercial school, where I have been teaching different subjects such as accounting, business administration and economics.

Being a teacher for me has always meant to be more than just being a lecturer. During the seminar in Kikinda I got some practical advice on how to implement this more directly. The main question that we addressed in Kikinda was how to carry out reflection learning processes and make it meaningful to the students and to us.

The main thing we learnt in the four weeks was how to actively "ignite" the learning in our students and how to support it in teams with other teachers and with other subject matters*.*

We were exposed to quite a number of new teaching methods which were shown in different settings for a variety of topics and group working forms. In Kikinda, for the first time I heard out about essentials in being a teacher in commercial education and also about involving different subjects and covering not only our own narrow view of being a subject teacher. We had lots of interesting discussions about Reflection Learning and it turned out that the majority of the group was willing to experiment with Reflection Learning. In the first part of the seminar we also looked at ways of grading our students in Reflection Learning processes.

The second part of the training was particularly interesting, but also quite stressful. In a way, the last 2 weeks were a continuation of the first part, where we all had to actually teach specific lessons in our own schools with the rest of the group sitting in the class. The trial-run teaching situations *took place in 9 different cities all over Serbia and were, in a way, an exam situation for all of us.*

The lessons had been prepared by previously formed groups of 2 or three teachers who had chosen their favorite class situation in their own schools and their own topic. The teaching situations were followed by the rest of us. After each trial-run teaching situation we came together for a group counseling situation in which the teacher trainer and a moderator chosen from among ourselves together with the rest of us pointed out the positive things as well as those things that could still be improved.

This after-lesson-analysis gave each of the participants the opportunity to learn more about the different aspects of planning, carrying out and evaluating lessons in schools. Competent planning was proven by taking into consideration the very conditions of each class, setting appropriate objectives, reflecting on didactical issues, using appropriate methods, bringing in media that would correspond to the lesson plan and finally choosing work and social forms of interacting in class that were suitable to the students with a focus on bringing out their (the students') creative potential.

Each new day added a new aspect. At the end of the four-week training program every participant had got started thinking about changing their view of teaching commercial subjects towards ***encouraging our own students in problem solving and helping them in their own way of finding solutions for real-life and real-work problems.***

It was a pleasure working in this seminar with our teacher trainer and with my colleagues. Part of the wonderful working atmosphere was taken home into our own schools when in my own school I invited a number of my colleagues to three trial-run teaching situations, after which we had very interesting discussions on how to make Reflection Learning the standard way of teaching and working in our schools.

SIX MONTHS LATER . . . Ćurćić Dragana, Secodary school of Economics and Trade, Bečej, participant of the seminar Reflection-learning, Didactics and Methods

The school year 2003/2004 is in the progress and I have been analysing every single minute of my class as I have never done before.
Have I motivated my students for their assignments?
Are the examples I have been using suitable for their age?
Have I attained the aim of the class?
I often wander if I learned enough during the seminars. I think I did, at least for the beginning.
Do I need more ´theoretical knowledge´ besides my experience? Perhaps I do, since these things cannot be separated!

My school is among 18 schools which participated in the pilot programme ´business administrator´. This programme was supported by the Ministry of Education and Sport, as well as GTZ, the German Technical Cooperation, an organization for technical collaboration. A series of seminars were organized for the teachers of these schools. I attended the seminar managed by Mr. Michael Axmann.

The seminar consisted of 2 parts.
1st. part: April 1st – April 13th, 2003. ´Theoretical part´ which definitly was not long-winded presentation.
2nd. part: May 12th – 23th, 2003. A visit to 9 schools in which we gave lectures we prepared in advance.
The participants of the seminar were mostly professors of vocational, economic subjects.

Being a professor in mathematics and not being accustomed to the exact content of the seminar, I was worried whether I would be able to fit in since it was not ´my field´.

The aim of the theoretical part of the seminar was achieving the desired results through work. Each workday was divided into 4 parts, each lasted 90 minutes. In the first 15 minutes of each part we listened to the introductory part of the lecturer. He would set a particular problem, then at least one method referring to the work with students, and the remaining part was for us. We experienced things which we did not expect. Noone told us how to activate students – we were activated ourselves.

We were divided into groups trying to work out the solution of a particular problem. We realized that it was easier to work in groups or at least, in pairs although in our schools we were taught to work individually. All the time I expected evaluation of our work and further instructions (such as ´try something else´, ´it is better if you´, ´perhaps you should´). In the first couple of days I thought that our work was not graded because we were not accustomed to a new situation, but later I realized that we were not supposed to be graded at all. The point is that we have to find a solution ourselves, to estimete what is good and what is bad in our work, to find a way to active teaching.

That is why I found the second part of the seminar well-organized and interesting.It was a sort of checking of what we had learned. Once again, we were divided into pairs, according to our interests. We were given several weeks to prepare a class and to perform it in front of the students. As we had expected, it turned out to be the most difficult!

Where should we start from? Although I have had a lot of experience in teaching, I had problems in choosing the appropriate topic and adopting it to knowledge and abilities of the students. After the class everything seemed to be much easier. We had 9 classes in 9 towns. Each class was analysed.
I think I learned most in the second part of the seminar. First of all, I learned to listen to the others, to hear about their impressions of the classes.

Although the participants of the seminar were not familiar with the content of my class (because of the subject I teach), they were able to follow my teaching. The same thing happened to me during their classes. There were a lot of suggestions how to improve a class, to approach a new working method or a topic.There were some objections too, but they were well-intended. Noone expected to give a perfect class. We are aware that in Germany one has to study two more years after they graduate in order to become a professor.

I would also like to mention the problem of grading and modular teaching .I sometimes still have difficulties with the first one, but we did not discuss this problem in details since we ran out of time.
Modular teaching is not regulated by law in our country. However, I think it is a very important prerequisite for successful implementation and application of active teaching.

Blended Learning in International Human Resource Development

On the characteristic features and the comparative didactic advantages of face-to-face learning, distance learning and e-learning

Prof. Dr. Rolf Arnold[1]

Contents

[1] *Holder of Chair for Education, esp. Vocational and Adult Education, and Head of the Centre for Distance Studies and Continuing Education (ZFUW) at the University of Kaiserslautern and of the Rhineland-Palatinate Virtual Campus (VCRP)*

1 Basic hypotheses and objectives

Integration hypothesis

The initial euphoria prompted by the expectations attached to the opportunities afforded by self-learning courses and virtual methods of content distribution has waned somewhat in the recent professional debate on adult learning (Nuissl et al. 2003, p.5): E-learning in continuing education practice does not often appear to work properly without face-to-face learning. According to an overall assessment of current experiences by the *Deutsche Institut für Erwachsenenbildung* (German Institute for Adult Education) in Bonn, preference is presently given to approaches that combine e-learning with the face-to-face method(Kraft 2003, p.43).

In international discussion, too, the view is gaining currency that the various distribution and didactic methods need to be *integrated*. In recent years, for example, technology-based distributed learning (TBDL) has gained ground internationally. TBDL integrates different ways of teaching and learning in a specific didactic setting:

"A distributed learning environment is a learner-centred approach to education, which integrates a number of technologies to enable the opportunities for activities and interaction in both asynchronous and real-time modes. The model is based on blending a choice of appropriate technologies with aspects of campus-based delivery, open learning systems and distance education" (Institute of Academic Technology/University of North Carolina; cited after Bates 2000, p.27).

These integral approaches are 'hybrid learning environments' (cf. Kerres 2000), where traditional face-to-face methods, self-directed learning processes and technology-based modes of learning are combined to a validated purpose. Bloh and Lehmann have stressed this hybrid concept in the debate in Germany and advocate the following:

Accounting for the respective strengths and weaknesses, a coherent combination of
- basic components (asynchronous teaching-learning networks) with, for example,
- elements of face-to-face study,
- elements of (classic) distance study (guided independent study approach),
- web-based multimedia and/or hypermedia elements along with
- aspects of teleteaching and teleconferences (remote classroom approach) (Bloh/ Lehmann 2002, p.93)

They bring the basic argument emerging in the current international debate into sharp relief. New technologies in teaching and learning are applied not to seek the one best method, but to identify a sound combination of the specific advantages of the various modes. To do so, it is indispensable to conduct a more precise analysis of the comparative didactic – and in this case developmental - advantages of the various teaching-learning modes. This is what the present report aims to do in outline.

Hypothesis 1: Comparing the respective capabilities and advantages of face-to-face learning, distance learning and e-learning will not result in identifying a one best approach. Rather, the vision emerging in the international debate is one of an integrated deployment of new technologies in the teaching-learning setting that advocates a didactically sound combination of these learning methods in so-called hybrid learning environments. This is about integration, not substitution (= integration hypothesis).

Implications for development cooperation:

The responsible use of new technologies in the reorganization and ongoing development of international competency-building should not succumb to a multimedia euphoria that sees e-learning as the answer to all problems. Instead, what we need above all (!) is a didactic strategy for international human resource development as a whole. Only as part of this strategy can sound decisions be taken on how suitable face-to-face teaching, distance learning and e-learning are for achieving what goals and building what competencies in the light of today's findings in teaching-learning research.

Hypothesis about the general transfer proximity of distance learning

As to the use of new teaching-learning technologies in development policy, we can say this much: In international human resource development, distance has always been a basic problem, because cooperation is often with countries and regions that are many thousands of miles away from Europe or the learning measures. For many decades attempts have been made to solve this problem by flying counterparts or scholarship-holders to Germany where, after a German language course, they obtained their qualifications at specialized training establishments. This practice has been frequently criticized, and in the last 20 years projects in particular have increasingly availed themselves of local, foreign-language short-term measures or upgrading courses in a third country. A major target of criticism was the *transfer problem*: Specialists from developing countries acquired qualifications far away from their occupational setting in a different language and/or cultural milieu, which on their return home they were then supposed to apply in work environments from which they had frequently become alienated.

Looking at the recent debate on continuing education, we can see that in all the more modern approaches in continuing occupational training, the *transfer distance* between the learning location and the place where qualifications are put to use has shortened. The role of workplace learning and training in various learning locations has thus greatly increased in recent years, particularly in corporate HR development. (cf. Dehnbostel 1996; 2001a; b; Hanft 1997; Reinmann-Rothmeier/Mandl 2001). At the same time, the debate surrounding distance-learning didactics on the ‘disappearance of distance from distance learning’ (Arnold 2000) has sharpened an awareness that the distance learning approach is not just a form of learning with a short transfer distance – learners frequently remain in their occupational and social settings and these are often deliberately catered for (e.g. in project work and final qualifying assignments) - but also that through the increasing use of chatrooms, e-mail, etc. distance learning is also less susceptible to 'distance'. On the contrary: the facilities for technology-based queries and contact with the 'teacher' enable an *personalized learning process* that go far beyond the level of communication afforded by face-to-face learning/teaching. Incidentally, in some face-to-face situations (e.g. mass lectures) the distance to the participants is greater than in distance teaching or study courses. These also adhere to the rather dubious precept of 'a uniform pace of learning' and a kind of 'staple diet for all'[2] that may at best just happen to appeal to learners' 'personal tastes' (= individual learning requirements).

For the transfer problem in areas of international human resource development, we may hence infer the hypothesis:

Hypothesis 2: In many respects, distance learning approaches have greater transfer proximity. Learners remain in their social and frequently also occupational settings and can thus directly 'match' what they have learnt against their issues and problems and situate it in their fields of activity.[3] Application of the skills and knowledge acquired often also forms part of the general didactic design (hypothesis of the general transfer proximity of distance learning).

Implications for development cooperation:

As concerns the special difficulties of international human resource development, the 'merged'[4] and/or off-campus forms of continuing education

---

[2] The adult educationalist Erhard Meueler from Mainz talks about the 'head waiter syndrome' in adult education (“serving up the cooked meals”), which he attempts to tackle using a 'recipe book of methods and social forms' (Meueler 2001, p.198 et seqq.).

[3] The notion deriving from learning theory of 'situating' what is learnt, which is what was and is meant in adult education by the principle of gearing learning to the learner or to the situation: The idea behind learner-centred learning "(...) is that adult education measures – the courses and discussion groups – should not normally be geared to a preset subject matter but to the prior experience and expectations of those addressed by the measures.” (Tietgens 2001, p.305)

[4] The notion of 'Entgrenzung' (merging boundaries) is increasingly used in the international debate on the effects of globalization and postmodernism. In his book entitled 'What is Globalization', the much-respected

afford some advantages: Distance or e-learners can remain in their professional and personal environments and transfer the acquired skills and knowledge much more directly. At the same time, this kind of 'workplace learning' or 'parallel in-service course of study' ensures acceptance of their transfer efforts from the outset because they remain part of the context in which this know-how is applied, and are not alienated from it. It is not uncommon for scholarship-holders to return after several months or years in Germany or Europe to the 'backward' system and encounter so much resistance that they can hardly apply anything or only little of what they have learnt. Considering the substantial costs usually incurred by this kind of 'travelling education', the issue of cost-efficiency is now almost unavoidable.

In HR development cooperation the scope afforded by off-campus teaching and learning, alternating with face-to-face phases as in sandwich methods, for instance, has not even begun to be genuinely explored.[5] For this reason, we suggest that cooperation projects increasingly employ this kind of in-service or workplace-linked approach (e.g. through reduced working hours and temporary 'secondment' to face-to-face upgrading courses). From a cost standpoint, but also – and in very special measure! – with a view to the transfer and sustainability of international competency-building, this would appear to be of fundamental importance.

Blended learning and the hypothesis of the primacy of didactics

In recent years, *new media* have been increasingly propagated as the great hope for a new kind of adult learning. Multimedia and e-learning measures[6] are often seen as *the* cure-all for continuing education, human resource development or education systems in international competition. In the latest newsletter of the *Forschungsinstitut für betriebliche Bildung* (Research Institute for Corporate Training), for example, under the heading, ‘Conquering international markets with e-learning' we read:

“More than any other product in the education sector, e-learning would seem predestined for international marketing. With properly prepared, network-assisted seminars, education agencies can gain entry into international business. (...) E-learning affords a major business advantage for international marketing: the outlay pattern for network-assisted multi-media learning is quite untypical for the education sector. Comparatively high initial investments are offset by lower overheads – even with ongoing content updates.” (Severing/Fietz 2003, p.3)

---

sociologist Ulrich Beck uses the term 'Vielörtlichkeit' (multi-locality), postulates a transition from 'monogamous to polygamous locality' and asserts that "Our own lives are no longer tied to a place, they are no longer fixed, settled. We live 'en route' (literally and figuratively), we lead a nomadic life, in the car, in the airplane, in the train or on the telephone, in the Internet, a transnational life based on and shaped by mass media. These technologies are media that transcend time and place. They eliminate distance, make distance close and proximity distant – absence in the same place. Living in one place no longer means living together and living together no longer means living in the same place.“ (Beck 1997, p.131 and 138 et seq.).

[5] In this context cf. the experience gained by the CAPADOC project at the University of Kaiserslautern, where Chilean university lecturers are upgraded online and invited to attend a short in-depth face-to-face course in Germany (ecampus.uni-kl.de/public/U_KL_CAPADOC/index.html).

[6] E-learning can be understood "as a generic term for all variants of internet-based teaching and learning measures” (Kerres 2001, p.14), i.e. as *learning in virtual information and communications networks*.

This line of argumentation has been confirmed by extensive experience. Nonetheless, the maintenance costs of distance learning and e-learning are sometimes greatly underestimated. The users of these 'distant' facilities frequently seek far more contact with the institutional provider (via telephone, e-mail, etc.) than do users of face-to-face education measures, who can evidently already satisfy most of their 'contact needs' through simple participation and experience (and face-to-face interaction).

a) The term *multimedia*

There is no single definition for *multimedia* and it is understood to mean all kinds of things. In the present report, the hallmark of multimedia applications and/or *new media* is that they integrate different storage media and communication media and are network-enabled (cf. Fischer/Mandl 2000). These media are network-enabled in the sense that they can be used in internal networks (*intranets*) of organizations or companies or on the global Internet for the distribution of data. On the other hand, network-enabled means that the new electronic media enable the user to collate information and thus connect contents, not just technical systems.

A new dimension opens up through the possibility of integrating communicative functions, too, with the help of *interactive media*, thus adding a social or at least interactive aspect to the content one. Developing and disseminating network technologies enables new forms of cooperation between learners and teachers on the one hand and amongst learners on the other that would be inconceivable in this form and density in traditional training and continuing education.

b) The term *blended learning*

A term gaining increasing currency is 'blended learning'[7] - a metaphor that really only suggests a suitable 'blend' of various learning scenarios, which is why the actual question relates to the criteria for measuring this suitability.[8] These are primarily didactic, they help

---

[7] Number 2/o3 of Inwent journal in.puncto deals with the the concept of blended learning and concludes: “It is probably the same as with a good whiskey: It is the right mixture that makes the blend and hence the high quality” (Die richtige Mischung 2003, p.1). In the Financial Times, Davis (2001) observes that “Blended Learning has become the standard term for the use of a wide range of learning technologies and methods in the workplace. Examples include the traditional classroom, web-based tutorials, web-based simulations, online-collaboration, online-coaching, video-conferencing, phone conferencing, knowledge management systems … the list goes on.” (Davis 2001)

[8] There are hardly any sound concepts or empirical research findings on this question. “It is not clear how the individual components of such arrangements can be combined for didactic effect, which technical, didactic-

gauge how far a learning scenario can really foster sustainable, competency-building learning. Also, cost-benefit considerations and – particularly in international HR development – the issue of worldwide accessibility are of growing importance.

Overall, though, the *hypothesis of the primacy of teaching* still applies.[9] In other words, experience has shown that a higher relevance and pedagogic effectiveness in teaching-learning processes cannot automatically be attributed to the use of 'new media', so that any allusions to the 'educational value of the Internet' (Marotzki et al. 2000) are misleading and unsubstantiated.

All promises of easier, more motivated and more effective learning through the use of multimedia capabilities try to divert attention away from the fact "(...) that learning is impossible without willingness, concentration, the (often arduous) effort and students' own (re)constructing activities (as defined by Piaget); in short, without the learner doing learning work. In an overall pedagogic-didactic approach, technologies/media can be used to assist this process, but they *cannot replace* it." (Bloh/Lehmann 2002, p.15 et seq.) The media selection, therefore, is always embedded in an overall didactic context:

> "A didactic vision aimed at integrating the selected media into the planning process implies a detailed assessment of which medium is particularly efficient for achieving which objectives, for imparting which contents, for implementing which teaching methods and for promoting which target group." (Seel/Dörr 1997, p.111).

As for basic and continuing education, the following applies:

> "Good teaching may overcome a poor choice in the use of technology, but technology will never save bad teaching" (Bates 1995; cited from ibid., p.11).

It is not the medium or the choice of technology that makes the difference, it is the didactics and the adult or occupational education concept! This aspect is often overlooked and we are distracted by the apparent benefits of more rapid and convenient distribution. 'Learning' only takes place when the learner is able to acquire sustainable competencies. Easier accessibility of 'content', as the subject matter is sometimes called today, is no guarantee for success,

---

methodological and, not least, organizational standards are needed, for what learning contents, teaching-learning goals and learner types these environments are (particularly) suitable." (Kraft 2003, p.44).

[9] Klimsa provides a matter-of-fact definition: "Here, 'new media' are understood to denote hybrid media based on microprocessor technology, storage technology and/or communication technology that are also characterized by interactivity, individuality, asynchronicity and multifunctionality. They create a continuum amongst all forms of communication processes – from intrapersonal and interpersonal up to mass-media communication." (Klimsa 1993, p.119)

however. Rather, the learner must also be able to ‘gain access’ to the content. This requires didactic analysis and preparation that offers learners helpful and practicable avenues for approaching the subject and prompts them to acquire knowledge, abilities and skills on their own. No competency has so far been developed just by clicking on and downloading 'content'. This is why the didactic approach takes precedence over all decisions on learning organization and distribution.

Hypothesis 3: Multimedia learning poses no or hardly any 'innate' didactic problems, but it does give rise to genuine adult education problems. This means that the quality and sustainability of face-to-face learning, distance learning and e-learning equally depend on the choice of contents, the didactic-methodological environment and on mobilizing and involving the learner – an aspect that is often overlooked in the general euphoria (hypothesis of the primacy of teaching).

Implications for development cooperation:

For the special problem of international HR development, this means that this sector in particular should step up efforts to develop adult education approaches further, rather than turn its attention too fast towards technology-based ways of learning. The options cannot be assessed and judged properly at all without a didactic strategy, if we want to prevent a virtual replication of unsuitable and frequently outdated models of adult learning (e.g. posting text on the web as a new form of knowledge 'fodder' overloaded with content).

This means that the new ways of reorganizing learning (distance learning and e-learning) clearly highlight the need to scrutinize everything – including the familiar and costly forms of face-to-face learning, which may have always been inadequate.

As we can see from the above, the point is not to switch approaches from face-to-face learning to distance learning to e-learning, but rather to develop a didactic strategy for sustainable adult learning in an intercultural context. So in international human resource development we must look somewhere other than where we thought - just as the following amusing story by Watzlawick shows:
A drunk is looking for something under a street light. A policeman asks him what he is looking for, and after he replies 'My key', they both search together. After a while, the policeman asks, “Are you sure that you lost your key here?” The drunk answers, “No, not here, behind the hedge, but there is more light here!” But we have not reached the punch-line yet. Watzlawick asks the reader, “Do you find this absurd?” – and of course we all find this preposterous – “If so, you, too, are looking in the wrong place!” (Watzlawick 1990) Similarly,

I think that the solution to our problems in international competency-building is not technological, it must be didactic. We will not find a solution just by 'switching' from face-to-face learning to distance learning or e-learning. The two latter forms of learning organization and distribution merely offer more ways to organize sustainable competency development.

For this reason, we can postulate the following additional hypothesis:

Hypothesis 4: We will not be able to fully substitute one monolithic model (face-to-face learning) with another (e.g. telelearning, virtual learning). Rather, our concern must be to combine the various modes and ways of learning in a didactically effective way into a complementary strategy. The current dominance of teacher-centred front-of-class teaching in many areas of our social learning cultures has, however, been long outdated. (hypothesis of the end of monolithic models).

2 Building competencies through lifelong learning calls for clear criteria on significant and sustainable learning

Crossing three learning boundaries

Less than ever can adult learning today be confined to the traditional forms of imparting knowledge in institutionalized continuing education measures. Rather, competencies are developed throughout life, informally and through the self-directed learning of individuals, groups and organizations. What we need to do is to forge an adequate strategy for this variety of teaching-learning settings. What is needed, in my view, is a strategy of lifelong learning or life-accompanying learning that

is based on a broader *notion of content* that integrates both knowledge and experience, both abilities and values ('attitudes'), into the adult learning process,

a) lifts the traditional boundaries of *learning locations* and also professionally facilitates, promotes and supports deinstitutionalized learning (workplace, autodidactic study), and finally

b) not only facilitates learning by individuals, but enables and promotes the learning processes of *groups, organizations or even social units (e.g. regions*[10]*).*

A key problem in education – internationally - is a learning culture based on front-of-class teaching (*knowledge 'fodder'*). Today, we know that central key qualifications and competencies are *not* imparted if learners (pupils, students, scholarship-holders) are not able or 'allowed' to take initiative and creative action when learning and approaching contents. Moreover, the concern is no longer to impart 'stored knowledge', instead, 'reflective' forms of knowledge in competency-building (method competency etc., in short: key qualifications) are becoming increasingly important. A purposive effort must be made to open the way to acquiring these, to make them accessible or 'experiential'.

Material knowledge (Know-how)	Reflective knowledge (Know-how to know)		
Stored knowledge (Knowledge for storing facts, theories, data, etc.)	*Method knowledge* (Knowledge on procedures for obtaining, presenting and communicating information)	*Reflection knowledge* (Knowledge for examining, criticizing and adducing reasons for concepts and assessing their implications)	*Personality knowledge* (Knowledge for recognizing personal involvement, i.e. emotions and interpretations, in interactions)

Fig. 1: From 'know-how' to 'know how to know' (based on Arnold/Schüßler 1998, p.61)

In my view, this also implies that *multimedia* today is a relevant topic in the educational and human resource development debate, but is nonetheless of subordinate relevance (also, and particularly, in the context of globalization). By expecting too much from multimedia arrangements in learning measures, we are in danger of replicating front-of-class teaching knowledge 'fodder' in the virtual domain, so to speak, instead of first superseding it in real educational practice. Only after we have agreed on the objectives we are pursuing in education and competency-building, and on the didactic preparations that are required to develop a comprehensive and science-based operational competency in the respective learning cultures, can we actually put didactically relevant multimedia learning environments to effective use (to foster learning and support the acquisition of skills and knowledge) and

10 The notion of 'learning region' in particular is of key importance for international cooperation, but has so far hardly been addressed at all (cf. for example: www.fes.de/FESLBBerlin/Ressourcen/download/Broschuere_lernende_Region.pdf).

also – on the basis of empirical findings – objectively judge whether multimedia learning, as often claimed, facilitates both a convenient presentation of content and self-exploratory and more sustainable learning.[11]

Hypothesis 5: Effective, sustainable, competency-building learning is only possible if learners can actively explore the material themselves. Method and problem-solving competencies and team ability can only develop if pro-active and cooperative learning is 'permitted' and deliberately encouraged (hypothesis of the end of the passive learning model).

Implications for development cooperation:

Development cooperation institutions need a competency model for their work. This means that they, too, need to define more clearly what competencies for self-directed and cooperative activities they want to promote in their HR development measures. In the international competency debate, German international cooperation will have no option but to set objectives, such as imparting key qualifications or instigating the development of competency in leadership, cooperation and organization, and to strive to achieve these effectively using practicable didactic strategies. Only after these strategies have been defined can any decision be taken at all on the most suitable learning and distribution organization (face-to-face or distance learning). Nonetheless – and this self-criticism is warranted – too many of the models presently used are passive learning models, that is, models that accord hardly any systematic role to self-directed learning by individuals, groups and organizations in partner countries.

[11] In my view, many contributors to the current debate take the second step before the first, 'presupposing' that multimedia also fosters the ability to act independently. They overlook that working at a PC is not necessarily the same as the autonomous effort to solve problems, and ignore that too much user-friendliness is not always conducive to the learner making his/her own efforts – Hegel talks about 'Anstrengung des Begriffs', the labour of understanding. This is exactly what the Frankfurt philosopher Gernot Böhme meant when he said that thoughtless visualization causes the imaginative faculty to atrophy.

Criteria for sustainable adult learning

We cannot circumvent the urgent need to settle didactic issues by turning to the convenient options of multimedia learning that do not overcome front-of-class teaching-learning culture, maybe even unintentionally reinforce it (due to its cinema and entertainment-like nature). In other words multimedia learning, too, must ultimately meet the criteria of sustainable learning suitable for adults that have been clearly defined by adult education research in recent years (cf. Fig. 2).

As far as developing competencies is concerned, a teacher-centred form of face-to-face learning is therefore just as restricted as a simple presentation of contents in a multimedia learning environment. Key to both forms of learning organization is that they must be designed to help the learner explore the subject – at least to a certain extent. In practice, this means prompting and requiring the learner to become active. To acquire knowledge effectively, it is not enough for learners to memorize contents; they must be able to implant it into their minds through cognitive effort. Important in this context is that they articulate it themselves (cf. Müller 1999), i.e. reproduce what they have learnt in their own words and apply it in other settings. The psycho-cognitive precept that applies here is that learning is 'thinking action', or 'organizing action' (*Ordnen des Tuns*), as coined by Swiss cognitive psychologist Hans Aebli (Aebli 1980).

Apart from the learner's own activity and self-directed efforts in the learning process, on the basis of empirical studies Mandl and Reimann-Rothmeier have identified three other factors that play a role in sustainable learning. These are shown in Figure 2.

These considerations lead to another hypothesis:

Hypothesis 6: Sustainable, competency-building learning is generally possible in all forms of learning organization (face-to-face teaching, distance learning and e-learning). The form is not the decisive factor; the crucial question is to what extent didactic scenarios meets the criteria of sustainable adult learning (active, self-directed, constructive, situational, social).

Five criteria for sustainable lifelong learning	
Active	Learning is only possible through the active participation of the learner. This requires learners to be motivated to learn and have or acquire an interest in what they are doing and how to do it.
Self-directed	In the learning process, the learner takes over direction and control. Although the extent of this self-direction and control varies depending on the learning situation, no learning is possible without a degree of self-directed activity.
Constructive	Learning is always constructive. As a matter of principle, without the experience and knowledge background and interpretation of the individual no cognitive process can take place.
Situational	Learning always takes place in specific contexts, so that every learning process is also situational.
Social	In the final analysis, learning is also always a social process. For one, the learners and all their activities are always subject to sociocultural influences. For another, all learning is interactive.

Fig. 2: Adult learning and learning ability from a constructivist framework (based on Reimann-Rothmeier/Mandl 1996; 2001)

Implications for development cooperation:

A didactic strategy for international HR development would have to point out more accurately what special opportunities for active, self-directed, constructive, situational and social learning are available or not available in face-to-face learning, distance learning or e-learning modes. This would be a first step towards a didactically sound application of these three options based on their comparative advantages.

Something that should not be underestimated, though, is that distance learning and e-learning make the delivery level more transparent. Any developer of distance learning courses has to make the contents visible and verifiable. The same applies to e-learning.[12] The following figure shows that the criteria for sustainable lifelong learning are by no means met by just one

[12] Viewed in this light, employing this mode can also trigger an improvement in the quality of the whole curriculum of a provider. This effect is repeatedly described in the literature and also tallies with the Kaiserslautern experience: A fellow lecturer who didactically prepared his lecture as distance-study material could hardly advance an argument to himself or others as to why he should not present this material to his face-to-face students as well. If he decides to take this step, the next question is already preprogrammed: Why should face-to-face students have to attend his lecture if distance learners receive equal course credit for studying the material independently?

mode: All forms of learning and distribution can generally meet the sustainability requirement, and do so in a variety of ways. The advantages of distance learning and e-learning are not in any way automatic, i.e. for the most part they do not depend on didactic considerations, as is demonstrated later.

Criteria for sustainable competency-building	***Face-to-face teaching***	***Distance learning***	***E-learning***
'Active'	The learner can include his/her own objectives and 'learning projects', i.e. concerns, questions, etc., and take an active role, i.e. not merely act as a recipient-reproducer in the learning process.	Distance learners have their own learning and handling strategies for dealing with contents, must carry out assignments for submission on their own and keep in contact with the provider institution.	As in distance learning – the learners must have the basic competencies to actively shape their learner role, using the facilities in the learning environment.
'Self-directed'	The teacher provides scope for self-exploration and withdraws progressively to function as a learning mentor, facilitator or coach.	A large degree of self-organization is necessary and learners must direct the learning process and in part also the intensity and depth at which they engage in the individual modules.	Hypertextual materials in particular allow for a large measure of personalized learning, that can be self-directed
'Constructive'	Learners themselves work out results, that is they construct the learning object – guided by questions or guided texts.	Prepared material (contents) is processed but the learners must develop the learning object on their own (through their own cognition) and also construct applications and solutions themselves.	
'Situational'	Learning in the real-life setting, e.g. at the workplace (in the German 'dual system') with access to direct learning through experience	The learners remain in their own real-life and workplace setting and are therefore often 'closer' to the situations where what they learn can be applied (exception: initial university degree for example – a distance study course in law in preparation for the profession without being able to apply knowledge/skills in practical situations).	
'Social'	Opportunities for face-to-face interaction and real-life cooperation (project or life-like, activity-centred learning)	Face-to-face phases are usually also available with localized support and distance learners organize their own regional study groups that can be instigated by an institution.	Chatrooms, video-conferencing and e-mail facilitate a real-time exchange, which resembles direct social interaction in many respects, but with its own 'quality' as well.

Fig. 3: Sustainable learning in face-to-face teaching, distance learning and e-learning

3 Didactic features of face-to-face learning, distance learning and e-learning

While face-to-face learning, distance learning and e-learning are forms of learning organization and distribution of contents that differ in strict categorical terms and in their specific profiles, in actual practice many mixed modes have evidently already emerged. Rolf Schulmeister, for example, describes a number of hybrid forms that can be scaled by their relative share of virtual components, and distinguishes the following forms: face-to-face seminar plus web script – face-to-face seminar (plus script) plus communication platform – face-to-face seminar alternating with virtual tutorials or virtual seminars – virtual seminar proper and/or complete private study (Schulmeister 2002, p.130).

There is another point here, however: The terms face-to-face learning, distance learning and e-learning in turn denote a host of different arrangements that can differ greatly. Face-to-face learning can mean a front-of-class lecture as well as an interactive and cooperative seminar that is not confined to the input of the teacher but caters for the experience or even the feelings and problems of the participants. The same holds for distance learning and e-learning, as is demonstrated below.

Hypothesis 7: Face-to-face learning, distance learning and e-learning are prototypes that are mostly found in hybrid form. Analyzing the respective specific features and comparative didactic advantages of these prototypes can help identify which mode plays a special role for what definite competency-building requirements.

Face-to-face learning

Face-to-face learning or education[13] designates the predominant pattern in learning cultures worldwide. People come together to learn, grouped around an older, experienced or even specialized professional who passes on his/her knowledge and competencies as a 'knowledge agent’. Today, high esteem is still attached to the function and position of these agents of knowledge in many cultures– in some cases they are elevated to an almost sacred status. This predominant form of learning culture is certainly rooted in dialogue as a specifically human form of exchanging information and knowledge. At least prior to the invention of the

[13] ‘Face-to-face' interaction seems to be a more appropriate term for the specifics of face-to-face learning than 'interactive learning', as e-learning also enables interactive learning.

letterpress and the mass circulation of books, as well as the literacy of broad sections of the population, there was no genuine alternative way of passing on knowledge.

The flip-side of these cultural and historical roots of face-to-face learning is its persistence as a learning model. Although various, often convenient sources of knowledge have been available for many decades already – at least in the developed countries of the world – hardly any *self-directed, autodidactic learning culture* has developed that could provide for a new rationale and didactically intelligent use of face-to-face forms of learning. Large parts of face-to-face teaching are still used for front-of-class knowledge presentation, as if nothing had changed in the last decades or even centuries, and as if there were no more didactically convenient ways of knowledge presentation today. Questions that are still virtually ignored are:

- Do learners really need to congregate to acquire new knowledge, abilities and skills effectively?

- What competencies can be developed without face-to-face interaction or with a scaled-down form of classroom teaching?

- What competencies can only be developed face-to-face? What are the disadvantages of this form?

An often overlooked problem with face-to-face learning is that face-to-face interaction is always only a direct interaction with one or a few learners, while the rest of the group (class, seminar participants) are obliged to listen. This is why classroom teaching tends to be a less cooperative form of learning, apart from approaches in modern vocational and technical activity-centred education. In her comparative study, the Canadian distance study expert Linda Harasim therefore asserts that

> "In typical face-to-face classroom communication, participation rates are unequal. Firstly, the instructor takes up most of the available class time. Class discussion, if and when this occurs, is often characterised by one or two students dominating the discussion with the majority remaining silent. In the on-line-courses at OISE, however, generally most students are participating and within each group the volume of contribution is relatively equally spread." (Harasim 1990, p.57).

An empirical criticism often levelled at face-to-face teaching, which mostly uses front-of-class teaching forms, is the high rate of forgotten content and the unintentional socialization effects of this teaching/learning method. Earlier investigations by the American Audiovisual Society have already pointed out that the sustainability of human learning (retention) rises sharply with the degree of learner activation. They estimate that we retain 20% of what we hear, 30% of what we see and 80% of what we (can) do ourselves (cf. Witzenbacher 1985, p.17; Gudjons 1992, p.50). The Munich psychologist Bernd Weidenmann thus observes:

"Every lecture, including transparencies or slides, could be replaced by a printed text or a diskette. Unlike the spoken word, texts allow the learner to adopt an individual pace of learning, process it in various ways and refer back to it at a later point." (Weidenmann 1995, p.26).

Heinz Klippert levels an even more fundamental criticism at mediatory face-to-face communication, where he highlights the unintentional – 'hidden' – educational effects of teacher-directed learning:

"To put it bluntly, what, then, is the actual educational effect of traditional classroom teaching and instruction? A very dubious ritual indeed is surely the dependence, uncertainty and thoughtlessness induced in the pupils. Many pupils ask themselves why they should give unnecessary thought to the subject matter, if the teacher selects and explains the essentials in the end and sets the test and exams accordingly? It is just this logic based on experience that inevitably leads to intellectual indifference and a creeping disenfranchisement. This criticism is admittedly harsh and pointed but it is nonetheless warranted. The recurrent complaints of many professors about their student's inability to study on their own is an indication as is the unmistakeable criticism by many (large-scale) enterprises of the scant personal initiative and methodological and social skills of apprentices." (Klippert 1994, p.18).

Accordingly, there is little to recommend the hypothesis underlying face-to-face learning that the best way to initiate learning is teaching. The attendant expectation that something that is taught can also be learnt. Only a fraction of what the teacher 'talks about' is actually also acquired by the learner in the long term. The unintentional side-effects of teacher-centred or leader-centred learning culture are also devastating. If we compare this with the activity-centred or 'life-like' learning methods (Arnold 1996) as widely advocated in modern corporate pedagogy, such as projects, business games, guided texts, teamwork with guided questions, etc., there is no reason to automatically assume that these methods are ultimately less important for developing sustainable specialist competency, if we consider the learning time that is 'wasted' by mediatory methods. Rather, activity-centred learning methods are characterized by a qualificatory polyvalence: they impart specialist knowledge and ability in a way that also enables the learner to develop methodical and social competencies at the same time. Activity-centred methods are part of a learning culture that is subject-focused while fostering activity and self-reliance, clearly anticipating the forms of cooperation and leadership that play a central role in modern work organization.

Implications for development cooperation:

Lively and cooperative activity-based learning can constitute a preparation for, and necessary accompaniment to, modern corporate policy which is of growing importance for international cooperation and the continuing education of change agents.

A comparative review and assessment of face-to-face learning or teaching, distance learning and e-learning should not cause us to lose sight of the above findings regarding the limited effectiveness and the unintentional educational effects of the familiar forms of face-to-face learning. As a rule, efforts to develop distance learning and e-learning courses are in danger of 'falling for' the teaching-learning illusion, i.e. the assumption that teaching is an indispensable and appropriate way of initiating learning. When applying these new forms of teaching and learning, account must be taken of experiences gained with self-directed, activity-based learning arrangements.

Hypothesis 8: Face-to-face learning frequently takes the form of front-of-class teaching. In this form, with its low retention rates, it is a very ineffective way of imparting content. Another, greater, problem are the (unintentional) educational effects, i.e. dependence, uncertainty and disenfranchisement of the learners. These tend to impair the development of methodological competencies for autonomous learning, which are essential for learners' personal development and their ability to plan their own lifelong learning. Experience with action-centred, lively and cooperative teaching-learning modes therefore also sets a major didactic benchmark for the use of distance learning and e-learning.

If we look at the specific features and comparative educational advantages of face-to-face learning and/or face-to-face interaction in learning processes, we have to concede - for all the criticism – that there are three competency contexts where the face-to-face relationship is indispensable:

- For one, this is the case in almost all measures where *psychomotor skills* can be imparted, acquired or habitualized via the sequence 'observation' – 'trial activity' - 'direct feedback'. These psychomotor competencies are particularly relevant in a vocational and technical education setting (e.g. skilled worker training, skill training), but also in sport and in parts of academic education (e.g. medical operation techniques). In these areas, favourable experience has been gained with computer simulations and/or virtual laboratories or workshops. Yet the 'real-life' setting, which is always a face-to-face situation, cannot be replaced by this kind virtual simulation, at best only supplemented. A metalworker can feel the resistance of the material only through direct contact and needs someone to watch and imitate to obtain the necessary direct and very specialized instruction in the use of tools, physical motion, etc.

- For another, the face-to-face relationship with a teacher, mentor or facilitator is also indispensable in all measures where the concern is *personal development* and *social competencies*. No-one can learn communication and cooperation abilities by studying documents or being in a chatroom. The same holds for other key qualifications, such as empathy, which are frequently more important, particularly in training and upgrading executives, than the acquisition of specialist knowledge about management techniques. The whole area of 'emotional competency' (cf. Arnold 2003; Golemann 2002) must also be considered. This competency can only be developed by someone who is ready and able to take a critical look at their own behavioural and response patterns and alter these in an often painful process by assimilating the critical feedback of a coach or the other members of the learning group. Developing intercultural operational competency also necessitates these kinds of self-reflective steps, which is why face-to-face contacts are indispensable here, too.

- Finally, we must not overlook that 'personal motivation' is a factor in all learning areas, also where knowledge is self-directed and can be acquired without the need for face-to-face contact. Topics can come alive when they are conveyed, explained and illustrated with personal enthusiasm. Ties between the teacher and the learner can often be established that foster personal development. In education, this is referred to as 'pedagogic relevance'. Nonetheless, this personal motivation does not justify the front-of-class, face-to-face learning method that dominates our education culture; it merely shows that other learning modes must ensure that they do not degenerate into impersonal learning bureaucracies, reduced to 'content and client management'.

Hypothesis 9: As a rule, face-to-face relationships are indispensable in learning settings that seek to develop behaviour. This applies in particular for the development of practical-professional abilities and skills in vocational and technical education, and also in the academic world. Where key qualifications are imparted and management, emotional or intercultural competencies are developed, too, personal contact between learners and teachers or facilitators is indispensable. Moreover, personality and/or the development of a personal relationship in the educational setup can play a *fundamental motivating role, engendering a sense of identification with and enthusiasm for the contents.*

Implications for development cooperation:

International HR development in development cooperation must be clear about whether, and if so how, it aims to develop the personality (e.g. ability to communicate and cooperate, emotional competency) and psychomotor competencies, where forms of face-to-face learning are almost imperative. There must be a candid discussion of whether and how far development cooperation, explicitly and implicitly, aims to establish a relationship with the donor country that can only be mediated along a personal-cum-pedagogic avenue, which would call for a complete reappraisal and new decisions on the shape of the resulting face-to-face contacts.

Distance learning

We are used to seeing distance study and face-to-face study as two opposing ways of organizing learning, where the dividing line is primarily the varying points where the boundaries between teaching and learning disappear. At the same time, education policy attaches great expectations to a convergence of the two alternatives, as indicated by the following statement by the Bund-Länder Commission for Educational Planning and Research:

“The further development of distance study also affords new opportunities for studying in an information society.” (BLK 1997, p.5)

Under ‘distance teaching’ or ‘distance’ or ‘private’ study, a publication from the 90s subsumes

“(...) all forms of teaching and learning (...) that allow for (and require) a didactic-pedagogic personalization of learning largely independently of time, place and personal mediation and at the same time entrust essential didactic functions of the teaching-learning process, such as the organization of subject matter, learning achievement tests, practice transfer, to media (text, audio-visual) and thus provide for guidance for the individual learning process.“ (Eckert 1994, p.32).

Here, the *disjunction of time and place in teaching and learning* in distance study is elevated to a didactic vision with far-reaching expectations attached to the scope for personalizing the learning process. The synchronicity and direct interactivity of teaching and learning, which is theoretically a possible, if not always practical reality of face-to-face study, is *implicitly* accorded a *benchmark status*: *We see distance study from a face-to-face perspective and therefore tend to perceive its implicit otherness as a deficient form of teaching and learning*. In other words, it is perceived as a form of learning that ought to be made to resemble face-to-face study as closely as possible by 'adding' social and tutorial components. In particular, 'distance' or didactic distance, the disappearance of boundaries and the time gap between teaching and learning are seen as a problem and great efforts are made to get rid of the 'distance' in distance study as far as possible.

Distance learning can already look back at a *long tradition,* also internationally. This tradition has always sought to overcome the 'tyranny of distance' (Northcott 1984). Distance was seen as a deficit which had to be overcome. The prime concern was to find out how to transform the distance in distance learning back into proximity. Or more precisely: What tricks can be used to do so (Peters 1997, p.36)? The history of distance learning is the history of these tricks. These efforts can be traced into the present and be divided into five categories according to Otto Peters, long-standing principal of Fernuniversität Hagen, a distance learning university, and former Chairman of the International Council for Distance Education:

- *Correspondence model*: Its precursors are correspondence courses – the term 'study letters' is still used today! – some of which can be traced back to the letters of the apostle Paul. The leitmotif of later correspondence courses, universities or schools was: overcoming physical distance and isolation through addressing the learner personally. This model was very successful particularly in the 19th century, following the establishment of a reliable postal system. Otto Peters takes a critical look at the 'correspondence culture' that lingers even today in long-distance learning courses and asks:

  > “(...) whether the feigned proximity and friendly familiarity are commensurate with the quite different atmosphere in institutions of higher education. How much does it help a professionally experienced student used to studying to have the contents presented in a personal manner and be repeatedly addressed in deliberately informally written study texts? (...) And how detrimental is it when these mechanical and frequently repeated forms of address start to grate?” (ibid., p.37et seq.).

- *Conversation model*: This model sought to assimilate the learner's perspective by drafting the study letters in the form of a didactic dialogue with an imaginary learner. The idea behind this guided didactic conversation (Holmberg 1985, p.26) was to create a kind of conversational atmosphere by using a clear, somewhat colloquial language (ibid.). Holmberg, who made this model known internationally, comes to the following conclusion in his investigations:

  > “Empathy and personal approaches are thus considered guidelines for presentation of learning matter in distance education.” (Holmberg 1989, p.51)

- Another model of distance education according to Peters is the *teacher model* (Peters 1997, p.41 et seqq.). This model typically tries to transfer as many of the usual teacher functions[14] as possible onto the study material or the additional video cassette, CDs or virtual learning platforms provided. Importance is attached to a learner-friendly layout and to gearing contents towards anticipated real-life settings and applications (e.g. case studies, situational relevance, self-testing assignments). These efforts have led to an important breakthrough towards providing a rationale for a separate distance-education didactics. There was a shift away from the simple - sometimes clumsy – attempt to move closer to the participant towards systematic research into *exactly how* to enhance the self-instructive impact of the material for the learner.

- The *tutorial model* attempts to design material that resembles a consultation, a 'tutorial in print' (Rowntree 1992, p.82). This model stems from the British tutorial tradition, where so-called 'fellows' - not the teachers themselves – provided counselling and guidance to new students. Peters points to the etymology of 'tutor' (Latin: 'protector') and argues that this model

  > “(...) basically calls on learners to get through the material on their own . The tutorial in print thus only performs an advisory function in cases where difficulties are expected to arise. (...) In this kind of procedure, of course, monologues and expositions as a teaching method are abandoned. The text is not supposed to present contents but to evoke the idea of a *conversation* with an imaginary tutor. Questions are posed, advice is given, views expressed and connections drawn." (Peters 1997, p.45)

- The *technology-assisted model* denotes all approaches to technically preserve normal teaching lessons in a face-to-face institution of higher education (audiotapes, CDs etc.) and supply these to external – i.e. absent – students. In this connection Otto Peters alludes to the audiotape distance study at Waterloo University in Ontario, which produces and sells about 90,000 audiotapes a year (ibid., p.46). This model deliberately refrains from a

[14] Otto Peters provides a supplementary and illuminating list to our previous considerations on face-to-face teaching and face-to-face communication, where he breaks down the following functional profiles for teachers: “Teachers

- arouse and direct the *attention* of learners,
- arouse and enhance *interest,*
- *motivate* learners,
- specify and provide the rationale for *learning goals,*
- remobilize *prior knowledge* with a bearing on the subject matter,
- present *teaching content* in a sequence of instalments that facilitates reception and understanding,
- repeatedly present difficult subject matter with particular clarity,
- give advice on the best way to learn the contents presented,
- verify teaching and learning performance through *feedback*,
- *practice* with learners,
- help them *apply* what they have learnt.” (Peters 1997, p.42).

special didactic preparation of the material for distance learners who do not come from the 'usual' student milieu, a restriction that may pose a problem in adult didactics, but may perhaps be warranted in financial cost-benefit terms.

Hypothesis 10: Distance learning has a long tradition and has gained diverse experience in handling teaching-learning measures that enable people to learn independently of time and place. In addition to correspondence course experiences originating from way back in the 19th century, models include the conversation model (guided didactic conversation), the teacher model, which has played a pioneering role in many respects (the material as 'teacher'), the tutorial model (tutorial in print) and the technology-assisted model. All these are guided by the inherent didactic concern to minimize or overcome the distance to the learner, which is seen as a handicap.

Implications for development cooperation:

For developing countries in particular, with the frequent large distances between educational institutions and prospective target groups, the distance learning model is an obvious alternative, as experience from many countries of the world shows.[15] Essential for distance education in developing countries, however, is the availability of a functioning postal system that guarantees the punctual delivery of the study letters and the assignments for submission – something that is lacking in many partner countries, or only available in urban regions at best. Nonetheless, for international HR development purposes we recommend stepping up collaboration with distance universities operating almost everywhere in the world and making use of these as distributive channels, developing them further in the process.

If we look at the advantages and disadvantages of distance learning compared with face-to-face forms of teaching, we can say this about the universities: The convergence of teachers and learners in space and time at a 'lecture' has been retained to this day, for reasons related to the resilience of cultural patterns. This is the case even though it has long been possible to present knowledge in ways that make better didactic sense and are better able to facilitate learning, and lectures have long since degenerated into a ritual of university didactic; not, however, the notion of disputation, which is increasingly in decline considering the masses of students that now populate our face-to-face universities. 'Distance' in distance education, which is treated as a deficient form of teaching in comparison with face-to-face teaching and learning, can be completely reinterpreted as a long overdue historical *opportunity to*

[15] Those worth mentioning include the University of South Africa (UNISA), whose roots go back to 1873 and which, with 130,000 registered students, accounts for more than a third of all students in South Africa and is one of the ten largest universities in the world. With 210,000 students, the British Open University also belongs to the world's largest universities, as does the China Central Radio and Distance University, which enrolled more than 600,000 students in 1986, to cite but a few examples.

supersede the synchronicity of teaching and learning in one place at institutions of higher education and universities, but not only there. Seen in this way, it is not the disappearance of 'distance' but the disappearance of (superfluous) proximity or better, 'presence' (in the sense of the unity of time and place in teaching and learning) that marks didactic progress on the way to a modern learning culture. From this paradigm, it is a very small step to the hypothesis that distance education is the future of face-to-face education, a hypothesis that is variously invoked in the relevant literature (Peters 1996, p.19) and that the BLK takes up in its already cited statement: “The further development of distance study also affords new opportunities for studying in the information society.” (BLK 1997, p.5).

Hypothesis 11: The ways of imparting knowledge in face-to-face education reach over into our current learning culture from a time when there was little 'intermediate memory'. The distance education approaches that make purposive use of storage media (print media, CD ROMs, etc.) thus also mark the future contours of face-to-face education (= hypothesis of distance education as the future of face-to-face education).

Proceeding from a definition of the organizational-didactic difference between proximity and distance in study courses as a key criterion for interactive opportunities (between teachers and learners), a detailed appraisal reveals that face-to-face and distance education both largely constrain or channel interaction and that 'distance' is a common feature of both. In both distance and face-to-face education, the planning of a course of study in particular is usually carried out without any interaction and coordination with the learners, quite unlike open adult education approaches or those geared to the participants or their real-life environment. Instead, the design, selection and didactic preparation of contents is carried out by the teacher or author and/or - in the case of distance education - the planner as part of the industrial production of a teaching course. Both 'construct' the layout for their course(s) and the implementation without any systematic inclusion of the user, naturally, however taking into account experience gained with previous measures and the anticipation of user interests. Nonetheless, it is valid to say that both forms of study involve *remote planning*. Neither face-to-face nor distance education is designed and conducted in direct exchange with the target group.

The actual 'distance' in distance study does not come into play until the measure is conducted. Here, the distance student is clearly in a different situation to the face-to-face student, without implying that this situation should be gauged as 'worse' or in some way detrimental as concerns its learning relevance. On the contrary, distance students have to rely more on themselves, since learning in distance education is less dependent on the teaching side than on the individual's ability to acquire the knowledge imparted, as the models outlined above show. To master the subject matter, however, distance learners must be skilled in developing information processing and learning strategies, which - incidentally - are qualities that have recently been accorded increasing weight on the labour market. The face-to-face student has initial difficulty in - and perhaps also lacks adequate opportunity for - developing these general skills and/or 'key qualifications'. Nonetheless, the face-to-face student can engage in dialogue and enjoy direct contact with the teaching staff. This opportunity to have a say in learning goals and co-shape the learning process is generally seen as an essential element in measures that aim at scientific education, not just at knowledge transfer.

But does education and competency-building really only take place in direct interaction at one place and time? Do they not take place *also and perhaps in a far more pronounced way when study is organized such that the learner first acquires, or must acquire, methods (accessing, presentation, documentation and learning methods) and undergoes what educational theory calls 'formal education'?* And are not study courses that foster the mental self-discipline of the learner thus ultimately 'closer', i.e. nearer to the learner and the development of his/her problem-solving competencies, if 'proximity' is understood not just in terms of time and place but also in terms of the directness of the educational effect? From this perspective, on second thoughts we must modify our initial analysis of the proximity-distance relations in distance and face-to-face education, especially as we have already seen that direct interaction in studying is not an end unto itself and that face-to-face study frequently fails to 'keep' its promises of interaction. The constant availability of interaction doubtless served a purpose historically (in the age of scant storage options), but we cannot retain the common forms of teaching and learning in one time and place for nostalgic reasons, only if they prove their functional worth anew. We are still awaiting the evidence.

Hypothesis 12: Face-to-face and distance study both contain didactic features of proximity and distance. If we do not confine our understanding of 'proximity' in teaching-learning processes to a time and place, but also bring it to bear on the directness of the - formal - educational effect (method competency, mental self-discipline, etc.), the impression of greater proximity in distance education cannot be completely dismissed (= hypothesis of the mixture and necessary redefinition of 'proximity' and 'distance' in studying).

In the following, I wish to consider more closely – on two other levels – the proposition that didactic aspects diagnosed at first glance as 'distance elements' turn out, on closer inspection, to enable a greater proximity between teacher and learner than some face-to-face methods:

- One level is the *transparency of the curriculum's content*. The content of distance learning courses is not derived from dialogue or in the teaching-learning discourse; it is structured more clearly in distance-learning material than in the logic and constraints of oral speech that are a feature of lectures and seminars. Distance-learning material also often contains carefully prepared transfer, exercise and reflective assignments that engage learners in a kind of virtual interactivity, calling on them to take a position. Viewed from this standpoint, the transparency and the virtual interactivity of study material often enables the learner to get closer *to* the subject matter and gain a deeper understanding of it; they can respond better to individual questions and learning difficulties that arise in submitted assignments, for instance, while the simultaneous mode of addressing learners in face-to-face study means that any response to an individual problem suspends the educational process for the other learners. The picture emerging, then, is *that distance study may well enable greater 'proximity' than face-to-face study, i.e. that it is closer to the substance of the learning process and the individual comprehension and assimilation problems of the learner.*

- Another level where distance study appears to have greater didactic proximity is that of *learner motivation*, and here I regard the distance-study mode as 'closer' as regards content and time. In many distance-learning courses the students have a broad choice from an overall curriculum; in compliance with general and formal requirements they can ideally compile the content of their individual learning programme to suit their interests and specific motives, which are often linked to their occupation. But even while already engaged in a course of study, they are not obliged to pay simultaneous attention, as they would be in a face-to-face setting, and need not 'take note' of everything if they are only interested in parts of the course or special aspects of a topic.

> This form of asynchronous use of a textually linear (as opposed to a temporally linear) course curriculum ultimately calls for greater structural adjustment in long-distance learning measures to suit the needs and requirements of the user.[16]
>
> On balance, the impression is that the learning type of self-directed learner is very widespread in distance study, but that this didactic environment is 'used' also by other learning types, including more conventional types (such as the teaching-learner). This *multiple use* is made possible because distance study is an externally organized form of self-directed learning.[17] Distance-education didactics must cater for different learner expectations and learning styles at the same time. The development of distance study into an independent study mode, which is a useful and welcome trend in many respects in adult didactics - and hence also into a role model for more self-organized learning in face-to-face study - must therefore also provide for learner types who employ learning strategies that are less typical of distance learning, but whose expectations also need to be met.

As already pointed out, we all tend to measure distance education against face-to-face study and against this backdrop, to conceive of it as a deficient mode of study. This also applies to the supposed sustainability of learning processes. Maybe because we ourselves have 'grown up' in a face-to-face teaching environment, in my view we are too ready to assume that solely or largely *verbal* presentation of knowledge necessarily results in its sustainable acquisition, a hypothesis that Klaus Holzkamp calls the 'teaching-learning short circuit'. In a 1996 interview we were able to conduct with him shortly before his death, Holzkamp pointed out that this kind of forced learning through teaching “(...) over the heads of the learners (prompts) above all opposition, refusal, evasion, where - assuming there is any learning going on at all - this

---

[16] As far as learning and learner motivation in distance study itself is concerned, in a Kaiserslautern study students from all disciplines stressed the motivational character of asynchrony. Particular importance was attached to the ability to schedule study-time as required and to be largely independent of a specific locality (93.1% and 85.3%, resp.). As to the framework conditions of study organization, 'sensibilities' varied by subject with *distinct differences between students with and those without a technical-scientific background*: The latter group, composed of students taking the adult-education and the total quality management distance study courses, rated the special didactic features of distance study (working with didactically prepared material, support during face-to-face phases) clearly higher than the students with a technical-scientific background on the one hand; but on the other hand they were also less ‘sensitive’ to the deadlines, performance requirements and learning goals in distance study; they were less interested in greater student involvement (e.g. in decisions on performance). *Altogether, our impression is that technical-scientific distance learners are more atypical, but more 'adaptable' (cf. Arnold/Lehmann 1997).*

[17] P. Jarvis stresses this aspect: “(...) it is only with distance education that learners are apparently free from the immediate presence of teachers. But, and necessarily, distance education institutions are very centralized in many ways, so there is no genuine learner autonomy in this form of education either.” (Jarvis 1995, p.139).

‘defensive learning’ is not geared to exploring the subject matter, but merely to ‘placating’ the teacher so as to avoid sanctions.” (Holzkamp 1996, p. 24). Holzkamp also alludes to the *scandalously low sustainability* of 'teaching-learning', comparing it against the model of 'expansive learning' (ibid.) that is more closely aligned with the questions and needs of the learners and their 'learning projects', as Holzkamp says.

In many respects, distance study follows the teaching-learning pattern but 'spares' (to use an expression by Bernd Weidenmann) the 'working memory' of the students and - unlike face-to-face study - gives them scope to acquire the subject matter at their own pace, enabling them to take their own time for a more in-depth and longer consideration of certain aspects. In this context, Weidenmann states that:

> “Language that is spoken and heard is ephemeral. The page of a book or a figure is different; I can look at them as long and as often as I wish. As a listener, then, I permanently depend on my short-term memory to connect the new information with the previous and current information. As I cannot remember everything at the same time, I must keep deciding what could be unimportant and what important. Perhaps I pause for some moments to decipher a statement or reflect on it myself. For a while, therefore, I cannot take absorb the contents of the lecture because the capacity of my working memory is no longer sufficient to absorb new information. I may then lose the thread. So I use up more capacity to work out what was said during my 'downtime'. As a result, I am again not really following for a while. Remember, all this is not a pedagogic accident: It is the normal consequence of the limits of the human working memory.” (Weidenmann 1995, p.56 et seq.)

This detailed description of the small steps in synchronous face-to-face teaching-learning clearly illustrates its structural limitations and the specific features that impair sustainability. These are largely due to the fact that people in a learning process are evidently hardly able to maintain continuous attention; rather, they learn *discontinuously*, which is why the study mode that caters for the discontinuous acquisition is also able to ensure more sustainable learning - at least in its basic approach. This assessment would also appear to be warranted because we have already known for a long time that sustainable learning (in the sense of retention) rises substantially with the degree of learner activity.

If we consider the qualitative and didactic advantages of learning supported by study material outlined so far, along with its suitability for adults, this hypothesis of the exemplary role of distance study for face-to-face study becomes apparent immediately. This holds in particular for the assumption that self-directed learning in distance study does indeed appear to facilitate the development of comprehensive competencies. Nonetheless, the expository and monocontextual spirit may be even more deeply inherent in distance than in face-to-face study, since information, facts and ideas are condensed into a script, which is uncharacteristic of the multiple perspectives and ephemerality that is increasingly a feature of our knowledge.

Hypothesis 13: The transparency of content and virtual interactivity of study material often enable the individual to get closer to the subject matter than is possible in the simultaneous mode of addressing learners in face-to-face study. In terms of learning motivation, too, distance study can come 'closer' to the needs and requirements of users. Finally, the possibility of asynchronous use of the course material is better suited to their time schedules and preferences (= hypothesis of the greater proximity of distance study to users).

If we choose the dual-mode strategy[18] of *dovetailing distance and face-to-face education* instead of *columnizing parallel structures*, I believe we can expect such a mixture not only to lead to a higher competency impact (self-organized learning), but also to a greater multiplicity of contexts in scientific learning. *Seen from this vantage point, i.e. in the dual mode, distance study can indeed serve as a model for scientific learning in a knowledge society.*

Hypothesis 14: Teacher-centred learning, the predominant teaching form of face-to-face study, is marked by a scandalously low level of sustainability. Due to its nature, spoken and heard language overtaxes the 'working memory' of students. The dual mode can therefore point the way to another future learning culture that can cater to both the advantages and the structural limitations (e.g. factuality of 'printed' knowledge versus provisionality).

E-learning

There is a Babylonian confusion of terminology in computer-based and net-based learning. We have computer-based training (CBT), computer-assisted learning (CAL), web-based learning (WBL) or online learning and/or virtual learning, to name just a few of the many different terms. In recent years, e-learning has gained increasing currency as an all-embracing category. This concept encompasses everything "currently (but also previously) available on the market for personal or organizational, local or distributed, synchronous or asynchronous, individual or collaborative, receptive or interactive (learning) (...), although these varieties can be more or less combined or integrated." (Bloh/Lehmann 2002, p.18).

The key advantage to e-learning is its independence of time and place, which enables users to avail themselves of the learning options in a fairly flexible and personalized way. E-learning

[18] In the international debate on distance study, the 'dual mode' denotes measures 'available' in both the face-to-face and distance-learning modes and where it is partly up to the students themselves what mode they want to study, or wish to switch between. Penn State University in the USA offers 'dual' programmes.

shares this advantage with distance learning, which is why we can argue that e-learning is an extension of distance study.

Hypothesis 15: Didactically prepared distance-learning material to facilitate learning is the precursor of a learning model that will constitute the future of sustainable learning: self-directed learning in a multimedia network.

Distance students also learn in an asynchronous way in line with their own time windows, and for this learning they need the self-study skills that enable them to explore learning contents independently while self-directing much of their preparation for exams and projects.

In the course of time different scenarios have emerged regarding the application of new media in education courses; they differ by their degree of virtualization. In the following we will look at two models.

According to Bremen (2002), there are three scenarios for media application that differ in the form of organization:

- At the first level, media can be used to support (traditional) face-to-face teaching (**enrichment approach**), where the multimedia applications are presented in a teaching environment or proffered for preparation and follow-on. In this approach, new media are used as distribution or visualization media and as self-learning modules for preparation and follow-on.

- At the second level, multimedia components are offered to complement face-to-face teaching (**integrational approach**). In this case, greater use is made of net-based communication facilities. This takes place in hybrid teaching environments, combining face-to-face and online phases.

- At the third level, multimedia substitutes face-to-face teaching (**virtualization approach**). Here, traditional teaching venues are completely superseded by e-learning measures (by virtual seminars, for example), although these are supposed to be underpinned by face-to-face phases (mostly at the beginning or end).

Lehmann (2002), in contrast, distinguishes four optional prototypes for the application of new educational media as part of the strategy development of a higher education institution or other adult education institutions:

Additive mode	Mixed mode	Semi-virtualized mode	Fully virtualized mode
Start up	Strategically important field of experimentation	Virtual training courses	Virtual education providers
Expanded interaction options Digital distribution **Supplementary virtual forms of contact offered**	Virtualization of individual **teaching events, subcomponents or courses** while retaining face-to-face teaching components	Virtualization of single or several **training courses** without alternative face-to-face facilities	**Fully developed education providers** All the functions of an institution are mediated by the web; the campus is 'defunct'.

Fig. 4: Development options of e-learning (cf. Lehmann 2002, p.231, modified)

- The **additive mode** is equivalent to a *digital declaration of intent*, an 'initial approximation to the information age' (Lehmann 2002, p.232).This primarily simplifies administration (e.g. by way of new, simpler methods of distribution) and expands the interaction opportunities (through e-mail consultations).

- The **mixed mode** is an expanded model of the previous forms of teaching and learning that combines virtual online with traditional face-to-face forms. The aim is to partake of technical changes in learning culture, round off content and improve quality (e.g. through tutorials).

- The **semi-virtualized mode** is meant to reach user groups in particular that cannot or do not wish to attend traditional educational institutions. Individual or several courses of study are provided exclusively online. This reduces space requirements, but the decentralized structures available can also be utilized more effectively in cooperative networks.

- The **fully virtualized mode** can potentially act as an agency for networking the mixed-mode components. This comprises the use of virtual teaching measures, but also the 'transformation of all the administrative functions' (Lehmann 2002, p.231). This can facilitate resource sharing (with other educational institutions, for example).

A comparison of the two models illustrates the ways multimedia teaching/learning measures can be used from a strategic-didactic perspective:

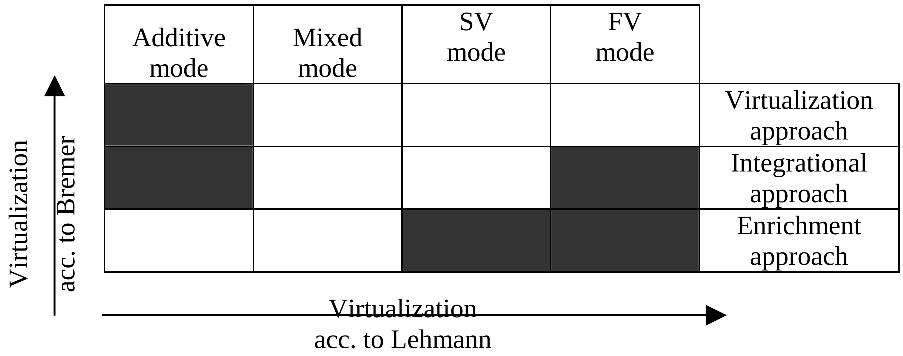

Fig. 5: Strategic-didactic options in multimedia teaching courses

Hypothesis 16: When using and implementing online-assisted forms of teaching and learning (e-learning), there are four different strategic development options, each with its own specific advantages, conditions for use (preconditions) and perspectives: (1) the additive mode (supplementary virtual facilities), (2) the mixed mode (parts of the measures are virtualized), (3) the semi-virtualized mode (virtualization of individual programmes) and (4) the fully virtualized mode (fully developed virtual courses).

Experience gained in recent years with the application of multimedia in teaching has shown that it is useful to combine the various teaching and social forms as well as different media into a media portfolio geared to the relevant target group in order to exploit the advantages of web-based and traditional modes of learning, and to create synergies. The following points are of strategic relevance:

- Need for learning advice
- Need to include forms of social exchange (cf. Döring 1999)
- Phased enlargement of media competency as the fourth cultural technique (cf. Baacke 1999)
- Adjustment of the teacher role and the role of those responsible for designing the teaching-learning arrangement

New media offer many opportunities for applying multimedia and telecommunicative learning. Studies have not, however, been able to prove that these applications are more efficient than traditional courses. In the USA in particular, many comparative studies on online learning and face-to-face learning have been conducted, largely in the university sector. Most found no significant difference in efficiency or only small advantages for online learning (No Significant Difference Phenomenon, Saba 2000).[19] Nor are the findings of research so far on hypermedia systems particularly encouraging, a fact frequently attributed to a lack of skill in handling new media (cf. Dillon/Gabbard 1998; Tergan 2002). In this connection, Kerres (2001) also sheds a critical light on frequently advanced arguments in the discussion on the advantages of new media. There is no clear empirical evidence that using new media directly improves learning motivation, learning achievement or the efficiency of education courses (cf. Kerres/Petschenka 2002).

These findings substantiate our hypothesis that the opportunities afforded by new media do in fact depend more on the didactic design of the learning environment than is often assumed.[20] This is corroborated by the findings of an extensive Australian study that reveals that high-quality teaching with new media is based on the same success criteria as in traditional forms of teaching, that is, on the didactic design and the didactic abilities of teachers (Alexander/McKenzie 1998, cited after Bremer 2002).

In our view, a problem with the use of new media is that many multimedia courses are modelled on traditional forms of teaching or learning. Using multimedia resources, they replicate learning from books or lessons already held by teachers. Learning media for adult learning requirements must, however, be designed quite differently. A major opportunity afforded by new media is the option 'for *another kind* of learning' (Kerres/Petschenka 2002, p.241); it is not enough to simply replicate traditional learning processes using new media.[21]

Implications for development cooperation:

This opens up diverse options for using e-learning for international HR development. Experience shows that in such contexts, it makes sense to start with the additive mode, where little or no experience has been gained so far in handling new educational media. In cooperation with national providers/sponsors, it is a good idea to experiment with mixed-mode projects

---

[19] See also: http://teleeducation.nb.ca/nosignificantdifference/

[20] In the study entitled 'An evaluation of information technology projects in university learning', over 100 projects applying new media in teaching were examined.

[21] Repeated reference is rightly made to the 'didactic deficit' in planning and implementing e-learning. This pertains to multimedia courses as much as those of face-to-face teaching. Learning measures with new media are sometimes measured against benchmarks that are tacitly passed over for traditional forms of teaching (e.g. learning effectiveness, efficiency, …).

(virtualization of subcomponents or single courses). From here, e.g. as part of a separate project component, one can then proceed to build up individual virtual training courses (semi-virtualized mode).

Experience indicates that the fully virtualized mode calls for several years of prior experience with e-learning. In addition, it is not absolutely necessary to develop and distribute full-scale virtualization in the partner countries themselves, since distance is 'disappearing' in development cooperation as well due to worldwide networking. We therefore recommend the centralized development of individual standard upgrading themes and making these available on a GTZ educational server. It is, however, also necessary to build up and maintain a support apparatus. E-learning is not electronic learning; we are still dealing with people who are learning,[22] enquiring and seeking contact – but at an electronic level. We need an apparatus with adequate resources.

4 Comparative advantages of individual forms of distribution

The design and use of all teaching-learning and distribution channels are subject to the so-called *implied didactic context* (Klafki 1985). This means that no form has greater didactic worth per se and can inherently ensure sustainable competency-building learning better than others. Rather, when adopting distance learning or e-learning forms we must proceed on the premise that any decisions regarding goals, contents, methods and media must be taken in line with a general set of aims. Changes to any parameters will affect the others and are not random (Jank/Meyer 1994, p.197). For this reason, Bloh/Lehmann are right to point out that

"(...) there is no reason to assume that (in the online sector) this general didactic argument should not apply and that the design of an online learning environment is less complex than that of a learning unit in the face-to-face mode." (Bloh/Lehmann 2003, p.56)

When looking at the *comparative advantages* of the three learning organization and distribution modes examined, we can say that the above-mentioned five principles of an

- active,
- self-directed,
- constructive,
- situational and
- social

[22] Also with the same cognitive and emotional mechanisms as in in face-to-face learning – a fact that is frequently overlooked and tends to be misrepresented by notions like e-learning, virtual learning, blended learning.

process (cf. Fig. 2) can (or cannot be) be brought to bear both on the traditional setting of face-to-face teaching and on distance study or multimedia settings (e-learning). Learning as a social process – as we know from interactive educational work - is certainly easier to arrange in traditional learning environments than with the new media, but – as already mentioned – e-learning also enables a relatively open social exchange in very specific forms, with their own opportunities and difficulties,[23] which poses the question of whether we should also make a fundamental reappraisal of the actual role of social relations in teaching-learning processes.[24] Making successful didactic use of the specific advantages of the new media is not just measured by the provision and demand for multi-media applications; we must also be assured that the learners actually learn in a sustainable manner that develops competency. Two-dimensional or three-dimensional graphics, colour figures, audio and video sequences, etc. can also be deployed to didactic effect in traditional learning settings with 'old' media. The personalization of learning paths, a purposive increase in social interactivity and 'practising' as well as the promotion of 'self-learning competencies' for self-directed lifelong learning can be achieved in traditional settings, but it is equally possible that they may *not* be (cf. Arnold et al. 2003).

If new media are added to existing methods, there is a danger that most attention is paid to the existing structure (e.g. information infrastructure). What is needed in contrast is a sustainable 'change in learning culture' (cf. Arnold/Schüßler 1998): *Only through a new learning culture can the use of multimedia facilities really bring added benefit.* We should not follow tradition too closely. Because certain teaching tasks are quite closely bound up with certain forms of event (e.g. introduction – lecture), when assessing alternatives it is easy to look less at whether they are best suited for the teaching task and more at whether they can do the same as the traditional teaching form in this context, with new options are first viewed through old spectacles. We overlook that perhaps the old form has already been obsolete for a long time and only persists due to the resilience of learning culture patterns.

Implications for development cooperation:

[23] On the problems with CMC (***C****omputer* ***M****ediated* ***C****ommunication*) see Döring (1999).

[24] Just as people do not learn in a sustainable way just because they more or less steer themselves through a learning environment, learning does not take place just because they come together in seminar room in a silent, sedentary learning setting. This is the assumption, though, when we require of the new modes of learning a stricter rationale than we do of familiar forms of face-to-face learning. The same applies here too: *Everything needs to be audited and matched against criteria, which in turn calls for a concept of sustainable learning that develops competencies in line with adult needs and conditions!*

> ***For international HR development this means adopting the principle of 'audit everything'! Only by auditing and assessing individual teaching and distribution forms on the basis of criteria can we really progress towards developing sustainable competency-building courses. To reiterate the point: Forms of face-to-face learning can be sustainable and can develop competencies, just as forms of e-learning and distance study can be less effective. In all their glory, new methods and resources should not blind us to the actual didactic challenge facing international HR development!***
>
> ***Nonetheless – beyond the didactic issue – there are also strategic reasons why using teaching-learning forms that are independent of time and place are particularly attractive for international HR development. These strategic reasons are related to rolling back 'travelling education and addressing participants directly and more conveniently using distance teaching and/or e-learning courses. This strategic use of new teaching-learning forms also makes sense because they make transfer easier, particularly in development cooperation. It calls, however, for HR development strategies that enable in-service learning. Supervisory and support facilities need to be developed and maintained, since self-directed learning in the distance or e-learning mode is directed by the learner, but he/she needs guidance and advice. The success of these kinds of measures – as international discussion has now established – depends on three factors: 1) support, 2) support and 3) support.***

Aside from didactic aspects, the comparative assessment of face-to-face teaching, distance learning and e-learning must therefore also account for strategic considerations in development cooperation. And it is precisely the latter that point to the high strategic relevance of stepping up the use of forms of distance learning and e-learning that are not subject to traditional boundaries. Based on a general conceptual design for adult education ('criteria for sustainable competency-building'), it is recommended to identify theme clusters where standard upgrading modules can be given a new didactic design and prepared for use in distance study or e-learning (e.g. project management, vocational training for instructors).

Decisions can be taken on the basis of the aspects compiled in the table below:

Mode	Typical features	Genuine advantages	Genuine disadvantages
Face-to-face teaching	People come together to learn, grouping around an older, experienced or even specialized professional who passes on his/her knowledge and competencies as a 'knowledge agent'.	- Comparatively low initial investments for new courses - Face-to-face contact and opportunity for direct social cooperation - Imparting psychomotor abilities in situational learning ('imitation', learning by watching and doing) - Personal development and commitment (personality as motivation factor, pedagogic relevance)	- Simultaneity (learning at one pace) guided by of a teacher-centred plan ('head waiter syndrome') - The much-praised interaction is often only a dialogue with one learner while the majority remains silent ('learning culture of the silent/sedentary listener'), although of course this effect can be avoided by an appropriate didactic-methodological scenario
Distance learning	“(...) includes all forms of teaching and learning (...) that allow for (and require) a didactic-pedagogic personalization of learning largely independently of time, place and personal mediation and at the same time entrust essential didactic functions of the teaching-learning process, such as the organization of subject matter, learning achievement tests, practice transfer, to media (text, audio-visual) and thus provide for (a) guidance for the individual learning process.” (Eckert 1994, p.32)	- General transfer proximity due to the learners 'staying' in their real-life setting and occupation (in in-service learning) - Learning content can be situated - Independent of time and place (asynchronous learning) - Unlimited number of participants possible in principle (industrial model) - Comparatively high level of self-directed learning (autodidactic learning)	- Higher initial investments (study material development, mentor system, etc.) - Ongoing 'renovation' investments (for updating study letters) - Operational postal service vital - Trend towards didactic 'staple diet' (the same for all) through standardized courses
E-learning	... can be understood "as a generic term for all variants internet-based teaching and learning measures" (Kerres 2001, p.14), i.e. *as learning in virtual information and communications networks (also using CD ROMS, videoconferencing, etc.).*	- Highly convenient layout and handling (convenience lead) - Transfer proximity possible thanks to learners 'staying' in their real-life setting and occupation (in in-service learning) - Learning content can be situated and personalized (through hypertextual multibranching) (face-to-face at a distance)	- Net access must be ensured - Permanent 'maintenance' of the learning environment (also for updating) and guaranteed tutorial system - Very high initial investments in comparison - Problems of net access and availability of efficient computers

		- Unlimited number of participants in principle (industrial model) - Independent of time and place (asynchronous learning) - Comparatively high level of self-directed learning (autodidactic learning) - Can be disseminated worldwide - Highly accessible in principle	

There is no doubt that the main advantages of using new media lie in their independence from time and place as contrasted with traditional (face-to-face) events. Moreover, the following specific advantages must be stressed:

- Convenience lead
- Easier to standardize
- Easy to reproduce
- Ability to activate

The major advantage of new media lies in the greater convenience afforded by this integration. This alone does not constitute a didactic advantage, but simply more convenient and faster utilization options. Due to improved standardization, learning contents can be used across institutions, through cooperation amongst the various educational establishments. Ease of reproduction facilitates the updating and 'maintenance' of learning contents, though only in the longer term. And finally, their activate potential offers an opportunity to reach new user groups.

The implementation of new media must, though, be in line with pedagogic *strategies*. That is the only way they can contribute to improving learning culture. One advantage of applying multimedia learning measures is the possibility of separating cognitive acquisition and practical exercises: if the theoretical foundation has been laid via online courses, teachers in face-to-face phases can concentrate more on applied teaching.

Finally, however, we need to mention that all the learning modes examined can have a very different effect on different learning types. The cultural factor also has a disparate effect. Comparatively few findings are available to date on the issue of how online learning is shaped by culturally patterned behaviour (Labour et al. 2000, p.6), but online tutors have observed that the following cultural specifics determine online communication:

- Choice of words
- Formality or informality of writing
- Amount of self-disclosure
- Amount of willingness to take risks by sharing ideas or comments (ibid. p.6-2)

Labour et al. summarise:

“What is not always immediately accessible to the reader are the cultural meanings that the participant wishes to convey in the message via the choice of vocabulary, syntax or metaphor, etc.” (ibid., p.6-3)

Considerations of this sort point to an aspect that is of fundamental importance especially for international cooperation. The way we handle the new learning technologies is subject to universal standards at first sight only; learning itself, i.e. deciphering, interpreting, acquiring and applying contents in the learning process, follows patterns that are subject specific (keyword: learning types) and culture specific (keyword: culturally patterned). The advantages and disadvantages of all learning and distribution modes must therefore be analyzed against the backdrop of the as yet modest research findings on the intercultural differences in learning behaviour and learning cultures.[25]

---

[25] One starting point here could be the earlier work of Renate Nestvogel (cf. Nestvogel 1982).

5 Outlook: Scenarios

The following scenarios are taken from cooperation in vocational and technical education:

End of long-term upgrading

Four technical teachers from a technical secondary school in Guatemala are to receive upgrading in Germany. The staff have serious misgivings because the instructors are dedicated colleagues who play a major role in school development. As if in answer to the problem, an offer arrives for a multimedia sandwich course from Inwent: a two-year programme made up of two distance-learning phases on technical and occupational education topics, and at the same time two six-week compact phases, one in Germany, one in Spain, to enhance technical skills based on the distance study course and try out/experience new didactic teaching methods.

The distance-study phases are under close guidance in an online tutorial system by a German and a Spanish university. Every two weeks, the participants must prepare assignments for submission for which they receive detailed feedback. They are also required to report and reflect on their experiences in applying what they have learnt in their school setting. To this end a chatroom is made available to them at certain times every week, where they can clear up questions and discuss problems with the tutor.

A condition for admission to the sandwich course is the release of the instructors from their duties for 15 hours a week. They undertake to pursue their studies in this time and not to engage in other gainful employment. All these details are agreed in an upgrading agreement between the German coordinating institution and the Guatemalan side.

End of ‘travelling education’

In an Indonesian project, all lecturers in occupational education are to be trained to professionalize local training centres for instructors and technical teachers. A four-month e-learning programme is chosen that provides texts, tasks and applied cases in a virtual learning environment that focuses on relevant issues in occupational, adult and university education. The participants remain in their positions but are released for study one day a week. After enrolment in the programme a training module is 'released' every month, where students work independently on text and assignment material on certain subjects and receive credit under a points system. At the same time they can communicate closely with their tutor at Inwent who inspects and comments on their work and discusses it with them. This tutor is not a regular employee but is specially contracted to function as a guide in addition to his normal occupation. The curriculum includes the preparation and adaptation of subject matter from a Swiss and Scandinavian university cooperating in this programme as part of a syndicate. Course credits acquired may be counted towards a Masters programme run by these universities using distance learning and e-learning. Each participant therefore has access to further education beyond this programme where they can obtain a university degree.

Bibliography:

Aebli, H.: Denken: Das Ordnen des Tuns. Band I: Kognitive Aspekte der Handlungstheorie. Stuttgart 1980.

Alexander, S./ McKenzie, J.: An Evaluation of Information Technology Projects in University Learning. Canberra 1998.

Arnold, R.: Emotionale Kompetenz und emotionales Lernen in der Erwachsenenbildung. Kaiserslautern 2003.

Arnold, R.: Weiterbildungsmanagement und Hochschulentwicklung: Wohin steuern die deutschen Hochschulen? In: Lehmann, B./Vogt, H. (Ed.): Weiterbildungsmanagement und Hochschulentwicklung – Die Zukunft gestalten! Dokumentation der 31. Jahrestagung des Arbeitskreises Universitäre Erwachsenenbildung (AUE – Hochschule Weiterbildung) an der Universität Kaiserslautern. 19./20. September 2002. Beiträge des AUE Nr. 40. Hamburg 2003, pp.7-15.

Arnold, R.: Interkulturelle Berufspädagogik. Oldenburg 1991.

Arnold, R.: Will Distance Disappear in Distance Studies? Preliminary Considerations on the Didactic Relevance of Proximity and Distance. In: Journal of Distance Education, 14(2000), 2, pp. 1-9.

Arnold, R./ Gomez-Tutor, C./Kammerer, J.: Die Entwicklung von Selbstlernkompetenz als didaktische Herausforderung. In: Witthaus, U./Wittwer, W./Espe, C. (Hrsg.): Selbst gesteuertes Lernen. Theoretische und praktische Zugänge. Bielefeld 2003, pp.129-144.

Arnold, R. (Ed.): Lebendiges Lernen. Baltmannsweiler 1996.

Arnold, R./Gieseke, W. (Hrsg.): Die Weiterbildungsgesellschaft (2 Bd.). Neuwied 1999.

Arnold, R./Lehmann, B.: Selbstgesteuertes Lernen im Fernstudium. Vortrag, gehalten im Rahmen der Sitzung der Kommission Erwachsenenbildung der Deutschen Gesellschaft für Erziehungswissenschaft am 3.10.1997 in Frankfurt. Frankfurt 1997.

Arnold, R./Lermen, M.: Lernkulturwandel und Ermöglichungsdidaktik - Wandlungstendenzen in der Weiterbildung. In: QUEM-report „Weiterlernen - neu gedacht“ (in press).

Arnold, R./Müller, H.-J. (Ed.): Kompetenzentwicklung durch Schlüsselqualifizierung. Baltmannsweiler 1999.

Arnold, R./Schüßler, I.: Wandel der Lernkulturen: Ideen und Bausteine für ein lebendiges Lernen. Darmstadt 1998.

Baacke, D.: "Medienkompetenz": theoretisch erschließend und praktisch folgenreich. In: medien + erziehung, Vol. 43 (1999), 1, pp. 7-12.

Bachmann G./Dittler, M./Lehmann, T./Glatz, D./Roesel, F.: Das Internetportal LearntechNet der Universität Basel. In: G. Bachmann/O. Haefeli/M. Kindt (Ed.): Campus 2002 - Die Virtuelle Hochschule in der Konsolidierungsphase. Münster [et al.] 2002, pp. 87-97.

Bates, T.: Managing technological change. Strategies for college and university leaders. San Francisco 2000.

Bates, T.: Technology, open learning and distance education. New York 1995.

Beck, U.: Was ist Globalisierung. Irrtümer des Globalismus – Antworten auf Globalisierung. Frankfurt/M 1997.

Bergler, M. (Ed.): Didaktik des Fernstudiums aus erwachsenenpädagogischer Sicht. Dokumentation zum gemeinsamen Symposium des Zentrums für Fernstudien und Universitäre Weiterbildung der Universität Kaiserslautern (ZFUW) und des Deutschen Instituts für Fernstudienforschung an der Universität Tübingen (DIFF) am 6. und 7.11.1995. Tübingen 1996.

BLK: Persektiven für das Studieren in der Informationsgesellschaft durch Weiterentwicklung des Fernstudiums. Issue 54 of BLK. Bonn 1997.

Bloh, E./Lehmann, B.: Hochschulentwicklung durch Fakultätsentwicklung für den Einsatz neuer Bildungsmedien. In: Lehmann, B./Vogt, H. (Ed.): Weiterbildungsmanagement und Hochschulentwicklung – Die Zukunft gestalten! Dokumentation der 31. Jahrestagung des Arbeitskreises Universitäre Erwachsenenbildung (AUE – Hochschule Weiterbildung) an der Universität Kaiserslautern. 19./20. September 2002. Beiträge des AUE Nr. 40. Hamburg 2003, pp.100-131.

Bloh, E./Lehmann, B.: Online-Pädagogik – der dritte Weg? Präliminarien zur neuen Domäne der Online-(Lehr-)Lernnetzwerke (OLN). In. B. Lehmann/E. Bloh (Ed.): Online-Pädagogik. Baltmannsweiler 2002, pp.11-128.
Bremer, C.: Qualifizierung zum eProf? Medienkompetenz und Qualifizierungsstrategien für Hochschullehrende. In: G. Bachmann/O. Haefeli/M. Kindt (Ed.): Campus 2002 - Die Virtuelle Hochschule in der Konsolidierungsphase. Münster [et al.] 2002, pp. 123-136.
Davis, J.: Implementing Blended-Learning. Forum Knowledge. Financial Times. November 2001.
Dehnbostel, P. et al. (Ed.): Neue Lernorte und Lernortkombinationen – Erfahrungen und Erkenntnisse aus dezentralen Berufsbildungskonzepten. Bielefeld 1996.
Dehnbostel, P. et al.: Mitten im Arbeitsprozess: Lerninseln. Hintergründe – Konzeption – Handlungsanleitung. Bielefeld 2001b.
Dehnbostel, P.: Erfahrungslernen im Kontext beruflich-betrieblicher Kompetenzentwicklung und lebensbegleitenden Lernens. In: Lebenslanges Lernen (Schriftenreihe der Senatsverwaltung für Arbeit, Soziales und Frauen. Vol 44. Berlin 2001, pp.251-267.
Die richtige Mischung macht´s: Blended Learning. In: in.puncto 2/2003, p.1
Dillon, A./Gabbard, R.: Hypermedia as an Educational Technology: A Review of the Quantitative Research Literature on Learner Comprehension, Control, and Style. In: Review of Educational Research, Vol 68 (1998), 3, pp. 322-349.
Dohmen, G.: Zur Zukunft der Weiterbildung in Europa - Lebenslanges Lernen für Alle in veränderten Lernumwelten. Bonn 1998.
Döring, N. (1999): Sozialpsychologie des Internets (Internet und Psychologie, Vol. 2). Göttingen [et al.]: Hogrefe, Verlag für Psychologie.
Eckert, S.: Fernunterricht - Lernen zwischen Selbststeuerung und Anleitung. In: Hessische Blätter für Volksbildung, 44(1994), 1, pp.32-43.
Fietz, G./Reglin, T.: Mit eLearning internationale Märkte erobern? In: Newsletter f-bb 2/2003, pp.3-4.
Fischer, F./Mandl, H.: Lehren und Lernen mit neuen Medien (Forschungsberichte Nr. 125). München 2000.
Goleman, D.et al.: Emotionale Führung Munich 2002.
Gudjons, H.: Handlungsorientiert lehren und lernen. Schüleraktivierung, Selbsttätigkeit, Projektarbeit. Bad Heilbrunn/OBB 1992.
Hanft, A.: Lernen in Netzwerkstrukturen. Tendenzen einer Neupositionierung der betrieblichen und beruflichen Bildung. In: Arbeit, 3(1997), 6, pp.282-303.
Harasim, L.: On-line Education: A new Domain. In: Jank, W./Meyer, H.: Didaktische Modelle. Frankfurt 1994. Mason, R./Kaye, A. (Ed.): Mindweave. Communication, Computers and Distance Education. Oxford et.al.1990, pp.50-62.
Higgison, C. (Ed.): Online Tutoring e-Book. Edinburgh 2000.
Holmberg, B.: Status and Trends of Distance Education. Lund 1984.
Holmberg, B.: Theory and Practice of Distance Education. London 1985.
Holzkamp, K.: Wider den Lehr-Lern-Kurzschluß: Interview zum Thema Lernen. In: Arnold, R. (Ed.): Lebendiges Lernen. Baltmannsweiler 1966, pp. 21-30.
Jarvis, P.: Adult and Continuing Education. Theory and Practice. 2nd ed. London/New York 1995.
Kerres, M./Petschenka, A.: Didaktische Konzeption des Online-Lernens für die Weiterbildung. In: B. Lehmann/E. Bloh (Ed.): Online Pädagogik. Baltmannsweiler 2002, pp. 240-256.
Kerres, M.: Computerunterstütztes Lernen als Element hybrider Lernarrangements. In: Kammerl, R. (Ed.): Computerunterstütztes Lernen. Munich 2000, pp.23-39.
Kerres, M.: Multimediale und telemediale Lernumgebungen - Konzeption und Entwicklung. 2nd, fully revised edition. Munich, Vienna 2001.
Klafki, W.: Neue Studien zur Bildungstheorie und Didaktik. Beiträge zur kritisch-konstruktiven Didaktik. Weinheim 1985.
Klimsa, P.: Neue Medien und Weiterbildung. Anwendung und Nutzung in Lernprozessen in der Weiterbildung. Weinheim 1993.
Klippert, H.: Methoden-Training. Übungsbausteine für den Unterricht. Weinheim 1994.
Kraft, S.: Blended Learning – ein Weg zur Integration von E-Learning und Präsenzlernen. In: Schiersmann, C. (Ed.): Erfahrungen mit neuen Medien. Report. 2/2003. Literatur- und Forschungsreport Weiterbildung. Bielefeld 2003, pp. 43-52.

Labour, M./Juwah, C./White, N./Tolley, S.: Culture and Ethics. In: Higgison 2000, Chapter 6.

Lehmann, B.: Vom E-Mail zum Online-Kurs: Vorüberlegungen zur strategischen Planung des Einsatzes „neuer Bildungsmedien“. In: B. Lehmann/E. Bloh (Ed.): Online Pädagogik. Baltmannsweiler 2002, pp. 221-239.

Marotzki, W./Meister, D.M./Sander, U. (Ed.): Zum Bildungswert des Internet. Opladen 2000.

Meueler, E.: Lob des Scheiterns. Methoden- und Geschichtenbuch zur Erwachsenenbildung an der Universität. Baltmannsweiler 2001.

Müller, H.-J.: Erschließen durch Versprachlichen. Zur Didaktik von Schlüsselqualifikationen im Kontext handlungs- und erfahrungsorientierten Lernens: In: Arnold/Müller 1999, pp. 87-135.

Nestvogel, R.: Traditionelle Erziehung. Einheimische Lernformen in Afrika. In: Gerwin, J./Mergner, G. (Ed.): Innere und äußere Kolonisation. Oldenburg 1982, pp. 70-84.

Northcott, P.: The Tyranny of Distance and Proximity. In: Smith, K. (Ed.): Diversità down under in distance education. Toowoomba 1984.

Nuissl, E./Schiersmann, C./Siebert, H.: Editorial. In: Schiersmann, C. (Ed.): Erfahrungen mit neuen Medien. Report. 2/2003. Literatur- und Forschungsreport Weiterbildung. Bielefeld 2003, pp. 5-6.

Pätzold, H.: Lernberatung und Selbstgesteuertes Lernen. In: PÄD-Forum, Vol. 29 (2001), 2, pp. 145-148.

Peters, O.: Didaktik des Fernstudiums. Erfahrungen und Diskussionsstand in nationaler und internationaler Sicht. Neuwied 1997.

Peters, O.: Didaktik des Fernstudiums. Erfahrungen und Diskussionsstand in nationaler und internationaler Perspektive. In: Bergler 1996, pp. 7-29.

Reinmann-Rothmeier, G./ Mandl, H.: Lernen in Unternehmen: Von einer gemeinsamen Vision zu einer effektiven Förderung des Lernens. In: Dehnbostel, P. et al. (Ed.): Berufliche Bildung im lernenden Unternehmen. Zum Zusammenhang von betrieblicher Reorganisation, neuen Lernkonzepten und Persönlichkeitsentwicklung. 2nd revised edition. Berlin 2001, pp. 195-216.

Reinmann-Rothmeier, G./Mandl, H.: Unterrichten und Lernumgebungen gestalten. In: A. Krapp/B. Weidenmann (Ed.): Pädagogische Psychologie. Weinheim 2001, pp. 603-648.

Rowntree, D.: Teaching through Self-Instruction. How to develop Open Learning Materials. London 1992.

Saba, F.: Research in Distance Education: A Status Report. In: International Review of Research in Open and Distance Learning, Vol. 1 (2000), 1. [http://www.irrodl.org/]

Sauter, W./Sauter, A. M.: Blended Learning: effiziente Integration von E-Learning und Präsenztraining. Neuwied 2002.

Schulmeister, R.: Virtuelles Lehren und Lernen: Didaktische Szenarien und virtuelle Seminare. In: B. Lehmann/E. Bloh (Ed.) (Ed.): Online-Pädagogik. Baltmannsweiler 2002, pp.129-145.

Seel, N.M./Dörr, G.: Die didaktische Gestaltung multimedialer Lernumgebungen. In: Friedrich, H.F. et al. (Ed.): Multimediale Lernumgebungen in der betrieblichen Weiterbildung. Neuwied 1977, pp.73-163.

Tergan, p.-O.: Hypertext und Hypermedia: Konzeption, Lernmöglichkeiten, Lernprobleme und Perspektiven. In: L. J. Issing/P. Klimsa (Ed.): Informationen und Lernen mit Multimedia und Internet. 3rd fully revised edition. Weinheim 2002, pp. 99-112.

Tietgens, H.: Teilnehmerorientierung. In: Arnold, R. et al. (Ed.): Wörterbuch Erwachsenenbildung. Bad Heilbrunn/OBB 2001, pp. 304-305.

Watzlawick, P. (Ed.): Die erfundene Wirklichkeit. Wie wissen wir, was wir zu wissen glauben? Beiträge zum Konstruktivismus. 6th edition. Munich 1990.

Weidenmann, B.: Erfolgreiche Kurse und Seminare. Professionelles Lernen mit Erwachsenen. Weinheim and Basel 1996.

Witzenbacher, K.: Handlungsorientiertes Lernen in der Hauptschule. Munich 1985.

Refer to Forschungsinstitut

Sudan Council of Churches * Munuki Water and Sanitation Project

Small Projects'

Training Manual

Volume III.

Sanitation

by

Márta and Rudi Guóth-Gumberger

1987

0. Introduction

TABLE OF CONTENTS

0.2. Foreword

Two people are named as authors of this training manual; however, in reality it is the result of the work of very many people. We hope that it will serve a great number of people as well.

The development of the manual has a long history. We had the opportunity to work with the Sudan Council of Churches from 1982 to 1987, first in the Integrated Rural Development Programme in Yirol, and then in the Munuki Water and Sanitation Project in Juba, both in Southern Sudan. We had been assigned as Water Supply Coordinator (Marta) and Community Development Coordinator (Rudi). In the beginning we had background knowledge but little field experience. So we started to learn with and from the people and from the literature. At the same time we started training the people with whom we worked. In the beginning the training was exclusively on site. However, in the second project, the training became more formalised into a full two years programme of both class and field work. We began from the actual level of knowledge of the trainees without the assumption that "one should know this or that", and gathered whatever knowledge was necessary to do the project work together. Soon, compiling and distributing of written material became necessary, and so this manual was begun.

It includes many of our experiences in the water and sanitation work during the last five years. The bulk of the information was ready in first draft in April 1987. Photocopies were distributed to the participants of a three months training course. Contributions and questions from the participants were invaluable, and many sections were revised/improved. Actually, the manual would have never been written without the eagerness of the Munuki project's staff to learn. This interest made learning and teaching very enjoyable. After the training course, the entire manual was revised further and finally completed to the present version.

We thank our colleagues in the Munuki Water and Sanitation Project for all we learned from them, for their good cooperation and for their contributions to the manual. They are: Edward Lako, Arthur A. Columbano Lado, Rhoda Benjamin, Joseph Lado Lubajo, Joan Batul Eliaba, Simon John Lubang, Gloria Habakuk Soro, Paulino Onorato Legge, Prissy M. Wai Wai, Jackson Onan. We also thank the course participants from Swedish Free Mission and Sudanaid for their contributions. They are: Inga Andersson, Margaret Toya, Isaac Kajokole Kenyi, James Jamil, James Wani, Lona Kojo Michael, Julius Sebit, Erasto Tupa, George Mogga Wani, Elijah Biar, Rose Paul, Robert Otik, Rhoda Yangi Wesley, Quintino Pitya, Anna Itto Njimirano, Ben Juma.

We extend our thanks also to Tom Benton, Sr. Margaret Donohue RSM, Paul McGleenan, Paul Hiebert, Char Holcomb, Stephen Power SJ, Dr. Douglas Reitsma, Susan Sunflower, Dr. Ruth Goehle, Betsy Bascom, for the tiresome work of proofreading.

We thank Mike Gogonya, Hakim Benjamin and Stephen Hakim for many of the drawings.

We are also very grateful to Michael Kubrom Habtai who shared his office with us during the weeks of final revision and typing, made the SCC library available for us and encouraged us with practical help and supporting words.

We thank the Sudan Council of Churches, and especially the Deputy General Secretary, Kosti Manibe, for the generous support which made this manual possible, by providing working facilities, financial resources, an electronic typewriter and numerous other resources.

There are many other individuals whom we would like to thank for their helpful contributions, but who are too numerous to be named.

We apologise for mistakes which remain in the manual in spite of revisions and corrections, and kindly ask the readers to send any corrections, comments and suggestions about the manual to one of the following two addresses:

Márta Guóth-Gumberger, Rudolf Gumberger
Neue Heimat 5a
D-83024 Rosenheim
Germany
Tel.: 08031/81103
Fax: 08031/43695

Munuki Water and Sanitation Project
Sudan Council of Churches
P.O. Box 469
Khartoum
Sudan

For further copies of the manual please contact:

Publicity Office
Sudan Council of Churches
P.O. Box 469
Khartoum
Sudan

As this work would never have been possible by our own strength without God's help, so we hope that God will also protect and strengthen any persons who use this manual and any future work done with the help of this manual.

Khartoum, 11.11.1987
Márta and Rudi Guóth-Gumberger

0.3. Purpose Of The Manual

The following introduction should help the reader to orientate her/himself to the manual and make best use of it.

According to the title, this manual is intended for small development projects with 20 to 40 staff members. The administrative and organisational structures described correspond to this project size.

Secondly, this book is a training manual. It does not intend to present all the information available for professionals about a covered topic, but rather to select the most basic and relevant information about a topic. Then it arranges and presents it in such a way as to introduce a beginner, but also that a trained staff can find it helpful. The manual will help senior staff to organise and improve their management.

The aim of this manual is to train senior secondary school leavers to become skilled technicians in water supply and sanitation work, to run a store, to keep records and do qualified field work, or to become community development officers. They should be able to lead a team later on and to do basic work in administration.

However, the manual can serve different purposes as described below:

1. Training:

- It can be used by the trainee for self-study or as complementary material to the teaching in class.

- It can be used by the teacher/instructor as a guideline for preparing lessons in class about the covered topics.

- Some parts can be used as guideline for technical training for illiterate people.

- Some parts can be used as guideline for training sessions in the community.

2. Guideline:

- It can be used by experienced people as a help to develop and build up a new small project.

3. Reference book:

- It can be used as reference in day-to-day project work in the different covered fields.

- It can be used by the trainee for looking up particular information after the course.

- It can be used for revising previously acquired knowledge.

0.4. Possible Readers of the Manual

The manual provides material for a two years training course for several (technical) areas with 25% training in class and 75% training in the field. It is expected that not everything in the manual is for every trainee or reader.

The manual was developed in a water and sanitation project. Therefore, major parts deal with these subjects. However, many parts are of a more general nature so that they might be useful for staff of other projects, for churches, communities and development organisations.

In detail, material from the manual might be useful for the following groups of staff:

No	Staff or Trainees	Relevant Sections	Relevant Chapters
1	senior staff in management functions	1,2,3,7	4.18; 4.21; 5.1; 5.2;8.11 8.29; 9.8
2	administrative staff, typist	1,2	5.1; 5.2; 5.8
3	bookkeeper	1,5	2.9-18; 3.3-4; 7.2-12
4	community development staff	1,4,9	2.7; 2.11-12; 2.18; 3.1; 3.2; 3.11-13; 5.1-2; 5.8 7.1; 7.6; 8.1-11; 8.29; 8.33; 8.36-39
5	water supply staff	1,5,6,7,8,9	2.11-15; 2.18; 3,1-2; 3.11-13; 4,1-2; 4,15-16;
6	other technical staff like building staff	1,3,5,6,7	
7	storekeeper	1,5,6,7	8.32
8	logistics staff	1,3,5,7	2.18; 6,3-5
9	driver	1,3,5	2.18; 6,3-5; 7.6

0.5. Summary of the Contents

The manual consists of nine sections, compiled in three volumes:

Volume I **ADMINISTRATION** **and** **COMMUNITY DEVELOPMENT**	1. General Knowledge 2. Administration 3. Running a Vehicle 4. Community Development
Volume II **WATER SUPPLY**	5. Mathematics 6. Basic Technical Knowledge 7. Building Administration 8. Water Supply
Volume III **SANITATION**	9. Sanitation

Volume I contains the general parts combined with community development, volume II and III contain the technical parts.

The manual was divided into three volumes so that it can be used in parts and become more handy for the reader- Sanitation was taken as a separate volume, because many may be interested in this section alone. Still, the manual is one work and the different sections belong together. There are many references pointing to other chapters in a different volume.

The different sections are briefly introduced in the following:

1. General Knowledge

Relevant information not fitting into the other sections was compiled here. "Using a Dictionary", "Reading Techniques" and "Study Techniques" are useful for the work with the manual. "Private Budgeting", "First Aid" and "Applications" are also generally needed knowledge.

2. Administration

The basic administrative knowledge and procedures for a small project of 20 to 40 staff members are compiled here.

3. Running a Vehicle

Here everything which a responsible user of a vehicle - not a mechanic! - has to know in order to run the vehicle economically and to prevent unnecessary damages is compiled. The section is important for both senior staff or logistics staff and drivers.

4. Community Development

This section compiles basic information necessary for community development work, both of general nature and background information as well as practical procedures.

5. Mathematics

The manual is not intended to be a mathematics book. Therefore, you cannot find detailed explanations of mathematical principles. Rather you will find a collection of mathematical knowledge in recipe-style about whatever was found necessary for the project work - mostly very simple things and few more sophisticated.

6. Basic Technical Knowledge

Basic technical knowledge for the water supply and sanitation work is compiled here, "Basic

Technical Drawing", "Using Measuring Tools", "Tools", and "Cement and Concrete" being the most important ones to be studied first.

7. Building Administration

The specific administration necessary for construction work is described her, consisting of "Planning", "Record Keeping", "Cost Calculation", "Purchasing" and "Storekeeping".

8. Water Supply

The section about water supply starts with general knowledge about water, discusses the different well types, the selection of a well site. Construction of hand dug wells with concrete rings is described in detail. An overview about pump types is given; some of them are described in more detail, especially hand pumps, and basic plumbing is added. "Well Disinfection", "Water Treatment" and "Health Education" are discussed in the end.

Hand dug wells and hand pumps were deliberately selected as main topics to be covered. Other books (see bibliography No. 17, 18,35) cover these topics much more comprehensively; however, here the emphasis was to prepare training material in easily understood overviews and step-by-step procedures.

9. Sanitation

This section starts with general background knowledge about sanitation. The different types of disposal systems are introduced and guidelines for selecting the suitable latrine suggested. Deliberately, only sanitation systems without water were selected to be covered. Several are described in more detail. The main emphasis lies on compost latrines, including different designs, composting process, construction, operation and maintenance, and follow-up. Chapters about children's squatting slab, bath, waste matter and pesticides complete the section. Many parts of this section are suitable for training sessions about sanitation in the community or in schools.

0.6. Format and style of the Manual

As the purpose of the manual is to assist trainees, teachers and field staff, we put emphasis on giving it a consistent and easily understandable format. The colleagues in the project work found that providing structures was helpful, and they had no difficulties at all filling the structures with life and flesh. Therefore, the manual offers a lot of structures, forms, tables, boxes, and step-by-step procedures. This shall help to gain an overview about the field and to easily find the required information.

A) Format of the Manual

The page numbers on top of each page reflect the format of the manual. Each one of the nine main sections contains several chapters. Each chapter has one or more pages.

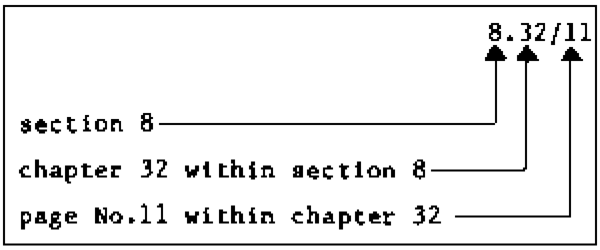

The introduction with foreword, etc., is added as another section 0. The appendix with bibliography, index, etc., is added as section 10. Section 0 and 10 are attached to all three volumes to help the reader use the manual. Thus, the volumes contain these sections:

Volume I: sections 0, **1, 2, 3, 4,** 10 Volume II: sections 0, **5, 6, 7, 8,** 10 Volume III: sections 0, **9,** 10

Consecutive page numbers at the bottom of each page run in each volume separately.

Each chapter starts on a new page. Both the title of the section and the chapter are named:

8. Water Supply

8.14. **Basic Plumbing**

Directly under this headline you will find one or several bible quotations in some chapters. These were used for the prayer fellowships which were an integrated part of the three months course, and are related to the topic where they are mentioned.

Usually, each chapter starts with a brief introduction as each chapter is an entity by itself and should be readable by itself. The material within one chapter is mostly structured according to the same system, for example, in the lesson "Basic Plumbing":

A) <u>Threads</u>

1. <u>Thread Types</u>

    a) Internal/External Threads
    b) Right Hand/Left Hand Threads
    c)..........
    d).........
    e).........
    f).........

2. <u>Thread Standards for Bolts and Nuts</u>

    a) Metric Coarse Threads M
    b).........
    c).........

3. <u>Thread Standards for Pipes</u>

    a).........
    b).........

4. <u>Pipe Measurements</u>

B) <u>Basic Operations of Plumbing</u>

1. Cutting with a Hacksaw
2. <u>Pipe Cutting</u>
3..........

C) <u>Pipe Joints</u>

1..........
2..........
....

Most lessons have only a structure A, B, C,... and 1., 2., 3.,... All titles are capitalised and underlined, as well as other important words within the text. All important messages are put into boxes. Step-by-step procedures are either numbered or put into a box with a separate column giving the reasons. All tables are in boxes.

As each chapter is a separate entity and can be used as a teaching unit, a continuous flow between the chapters is not maintained. Repetitions occur sometimes, otherwise, a reference refers to the relevant chapter containing more information about a certain point.

B) Language of the Manual

The manual deliberately uses simple English to explain a topic, to give trainees with limited English knowledge a chance. Simple sentence constructions were preferred to elegance of style. Some special vocabulary in the different topics was introduced, but always with explanations. Often another equivalent word is given in brackets, e.g.

"serrated (= toothed)",
"aquifer (= water-bearing layer)"

As the book is a training manual, no foot-noting was applied. We used drawings and information from books together with project experience and compiled them for the teaching purpose. The literature used and useful for further readings is compiled in the bibliography.

C) Drawings

Many drawings are added for illustration and easy reading. In the technical part, mostly proper technical drawings are used (such as cross-section, layout plan, etc.), because they convey the information in a more correct and complete way than other types of drawings. The reader/trainee not acquainted with technical drawings must study chapter 6.1 "Basic Technical Drawing" before reading. Experience showed that the trainees without previous technical training were soon able to read technical drawings. The drawings in the manual shall also give the trainee practice in reading technical drawings. Almost all drawings are placed below or beside the relevant text, although this way consumed more space. This shall ease the reading as well.

0.7. Instructions on how to Use the Manual

As not everything in the manual is useful for each reader, you need to pick what is interesting for you. Selection should be easy because of the provided structures. The following can help you to make full use of the manual:

1. Do not attempt to read the manual from the first to the last page like a novel.

2. Make yourself acquainted with the format and the paging of the manual (see 0.6).

3. Cut separation taps from carton paper for the different sections and glue and staple them to the title page of each section

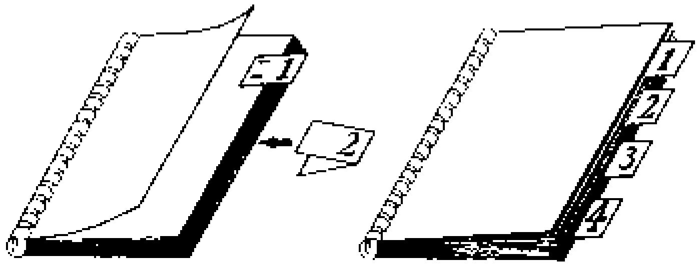

4. Use the SQ3R-method explained in 1.3 to read the manual.

5. Read the table of contents and mark which chapters are interesting for you.

6. Decide which chapters to read first. Chapters 1.2, 1.3, 1.4, 5.1, 5.2, provide necessary

basics for further reading of the manual; for technical staff also 5.3, 5.4, 6.1.

7. Apply the SQ3R-method for each chapter as well. Read the headlines of the chapter first to get an overview, collect your questions about the material, etc.

8. Underline important key-words; write your notes, remarks and questions into the manual wherever needed.

9. Use the list of abbreviations, list of forms used, list of leaflets and posters, in the end of each volume.

10. Use the index in the end of each volume to quickly find information about a certain point.

11. Use the bibliography for further studies.

0.8. Instructions on how to Teach with the Manual

There are many books about how to teach, and teaching methods are not the topic of this manual. Thus, only a few suggestions are compiled in the following on how to teach with this manual (see also 4.14; 4.24).

A) General Learning Conditions

Help obtain good learning conditions:

1. Take special care that the class becomes a community, that the trainees get to know and respect each other, that they can mutually help each other. Fruitful learning can only take place in an atmosphere of cooperation.

2. Believe that the trainees are capable of learning. Trust is essential for encouragement and learning.

3. Take special care that the physical situation is supportive for learning: an adequate room, water, feeding, sanitation must be available. Involve the trainees by distributing assignments (fetching water, cleaning, organising food, etc.).

4. Take care that the trainees have sufficient materials like files, paper, pens, etc.

5. Arrange the class in the classroom in a circle whenever possible. This is the case for most of the chapters in this manual, except for the ones involving calculations.

B) Planning Lessons

Good preparation is essential for good teaching:

1. Take time for preparing your lessons. Roughly estimate as much time for preparation as for class time.

2. Plan the syllabus before a training course.

3. Each chapter in this manual is an entity by itself and can be used as guideline for a lesson. Some chapters may take several lessons to cover. Roughly, maximum five pages can be covered in a teaching unit of two hours.

4. Plan extra lessons in the beginning of the course just for explaining the syllabus and the format of the manual.

5. Plan enough time for evaluation.

6. When planning your lessons, mix the teaching methods: mix group-work with class discussions, calculations with explanations on a model, etc.

7. Have your teaching material (models, posters, etc.) ready before the lesson.

C) Teaching Methods in Class

A variety of teaching methods is suitable for teaching with this manual in class:

1. You can structure many lessons according to the SQ3R-method (see 1.3):

S = Survey:	Explain at the beginning what the lesson will cover.
Q = Question:	Ask the trainees if they have questions about the topic and note these down. Check after the lesson if the questions were answered.
R = Read:	Conduct the lesson. Explain the material.
R = Recite:	Let trainees repeat and explain with their own words what they have learnt and understood.
R = Revise:	Give homework, revise the following day or after one week.

2. Use group-work. Let groups of 4 to 5 discuss a certain question, try to read a passage or a drawing of the manual together, collect different aspects of a topic, etc.

3. Use discussion in the whole class to summarize group-work, to introduce something new, to explain an aspect relevant to all.

4. Use from time to time work on a certain assignment for each trainee alone (e.g. calculations).

5. Use role plays whenever possible (e.g first aid, interaction of technicians with the community, etc.). They are fun and very educative.

6. Teach by action whenever possible (e.g. cleaning and rehabilitating a latrine, safety measures, interview, etc.).

7. Include field visits into your training programme.

8. Use posters, models, actual examples, whenever possible. Many of the drawings in the manual can be drawn on big posters for use in class. Well construction work is best understood when demonstrated with small models. Bring pieces of material for everything you discuss in class.

D) Questions

Asking questions is a way to learn, for both the teacher and the trainee.

1. Encourage the trainees to ask questions.

2. Ask at the end of a lesson whether there are any questions.

3. Ask in the beginning of a lesson if questions remain from the day before.

4. If you cannot answer a question, do not pretend and dodge around. Admit it, look it up after the lesson, and answer it the next day.

5. Spend some time before and after the lesson in class to give the trainees a chance to ask.

E) Homework

Study on her/his own is essential for the trainee in order to be able to digest the material learnt.

1. Give homework to almost all of your lessons.

2. Encourage students to keep their homework well filed and organised with chapter numbers and headlines.

3. Ask trainees from time to time to prepare for a lesson on their own by studying the manual in advance.

4. Take time to correct the homework and return it as soon as possible.

F) Teaching Field Work

Some extra efforts in teaching field work will improve the results considerably.

1. Before you do a new type of work the first time in the field (like lowering concrete rings into a well), discuss the step-by-step procedures in detail in class. Use a model to illustrate the steps. This will help the trainees to keep an overview of the work. It will also help them see themselves as a part of the whole team and process rather than individuals doing just menial work. Discussion beforehand in class is better than trying to explain on the spot in the hot sun when half of the staff cannot hear you.

2. Sit down in the shade with the staff after having completed a new job or after something has gone wrong. Evaluate what happened by asking: What did you learn? What was new? What went wrong? What could be done better?, etc. (see also 2.7). This can help a lot how to judge the situation and how to improve techniques.

3. The same methods can be applied when teaching field work to illiterate people. Using models is even more important.

9. Sanitation

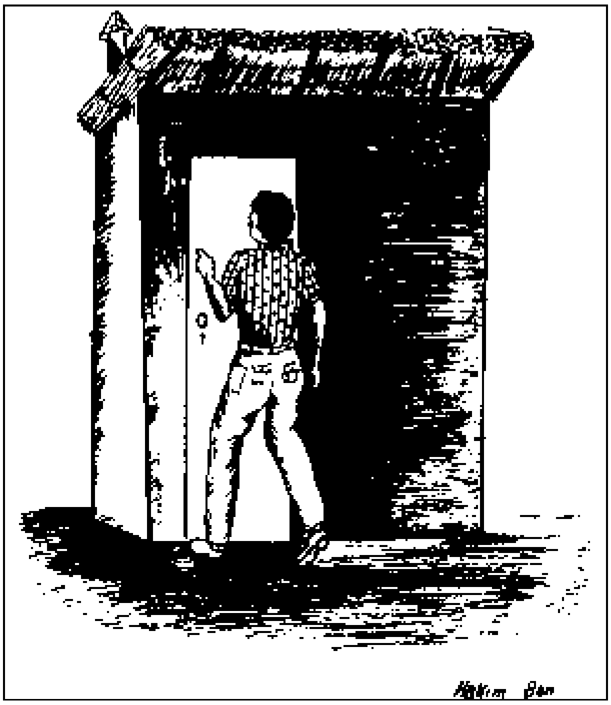

9.1. Importance of Adequate Sanitation

Everybody has to dispose his/her waste matter every day, not only faeces and urine (together called excreta), but also rubbish and other waste.

In each culture, ways have been developed to deal with this problem and in all cultures there are certain taboos regarding waste, and especially regarding defaecation and urination. Everywhere, also, the problems of health and pollution are present. Adequate sanitation means to deal with these problems in an effective way, that is find a solution which is harmless or even useful.

In order to do this, hygiene (= personal cleanliness) and sanitation (= public cleanliness) are equally important and depend on each other. Clean water supply, needed for health and hygiene, must go with taking care of excreta and garbage. If the connection is not considered, diseases spread easily. Therefore, sanitation is an important preventive health measure.

The importance of sanitation will become clear to people if health education and information are based on the daily life experience and practice. Change will only happen if it is convenient and the solutions offered are easy and accessible.

The following questions can stimulate reflection on the topic in a group:

1. Is food a need of your body?

   What are your efforts for satisfying this need?

2. Is water a need of your body?

   What are your efforts for satisfying this need?

3. Is sleep a need of your body?

What are your efforts for satisfying this need?

4. Is defaecation a need of your body?

What are your efforts for satisfying this need?

The following picture explains the connection between sanitation, water supply and disease, and shows in which ways the transmission cycle can be broken:

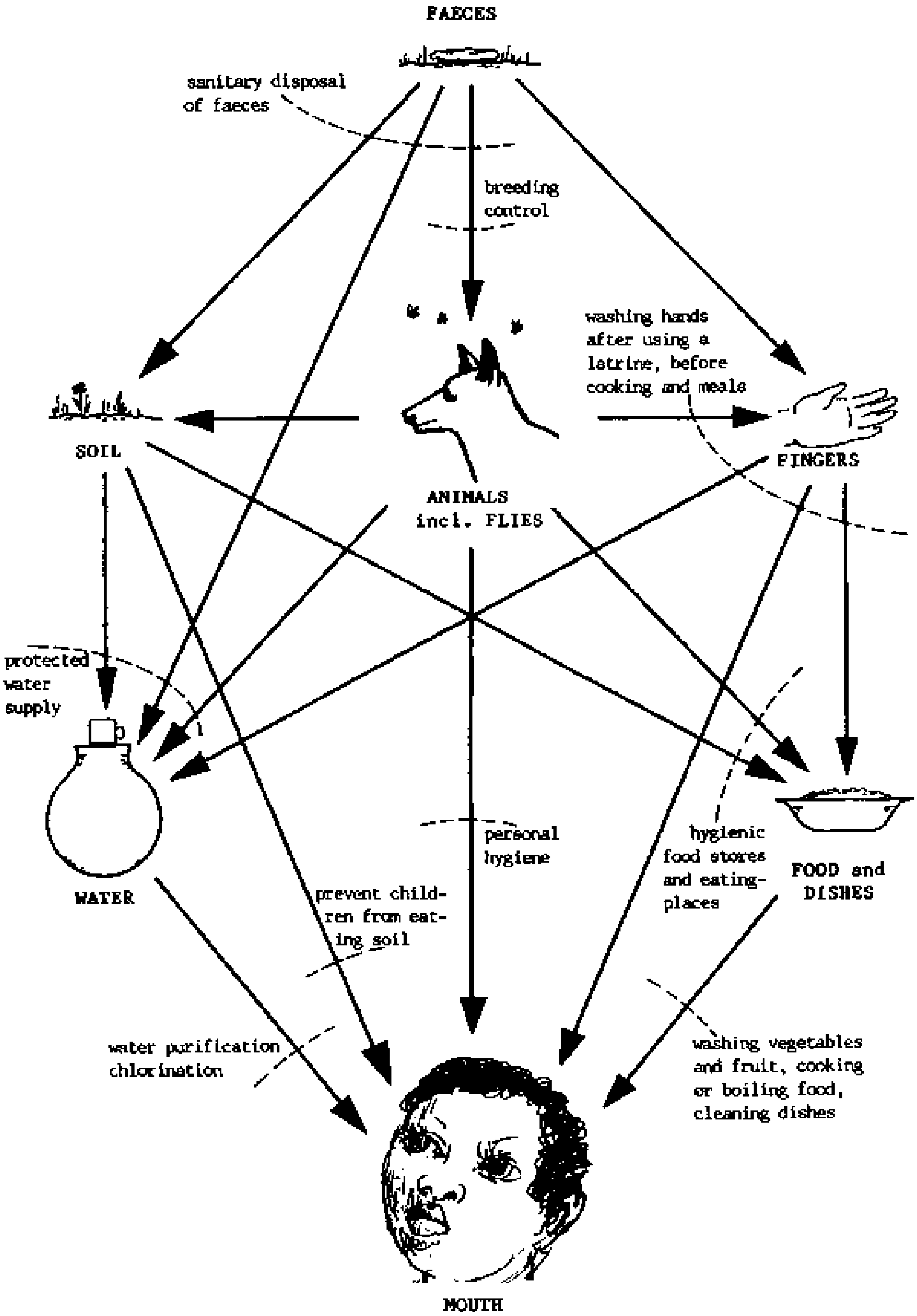

9.2. Life Cycles

Jn 6,57; 12,24

The world was created in such a way that the different living creatures support and benefit from each other mutually. These processes are repeated again and again, they happen continuously in life cycles. If the life cycles are interrupted or disturbed, there might be no immediate visible reaction, but disastrous effects will show in the long run.

A) <u>Life Processes of Plants and Animals/Humans</u>

The two following basic (and simplified) life processes of plants and animals (including human beings) correspond and supplement each other.

1. <u>Plants: Photosynthesis</u>

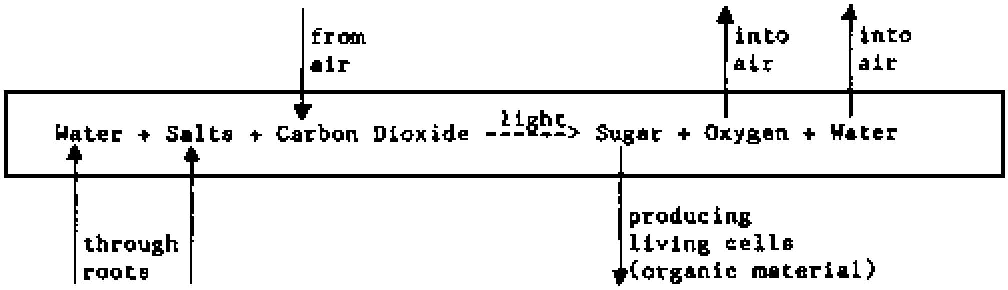

2. <u>Animals and Humans: Respiration</u>

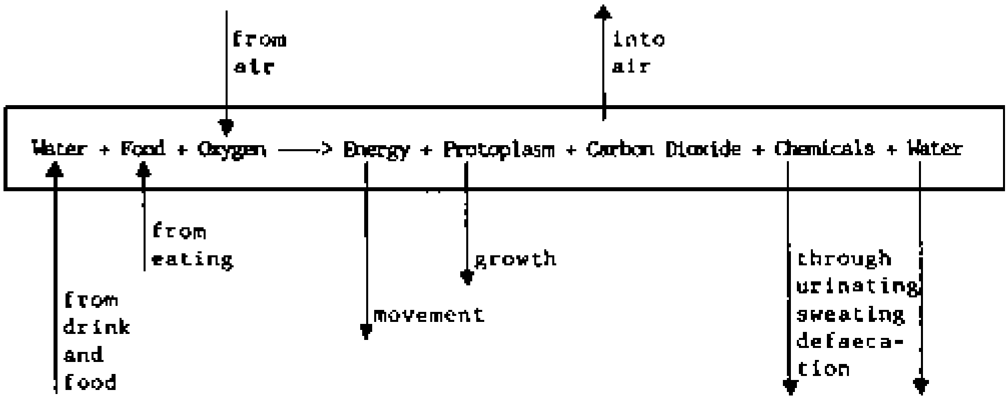

What is a waste product of the plant is a resource for the animal and the human being, and the other way round.

This fact can clearly be shown in the life cycle of air and the life cycle of food:

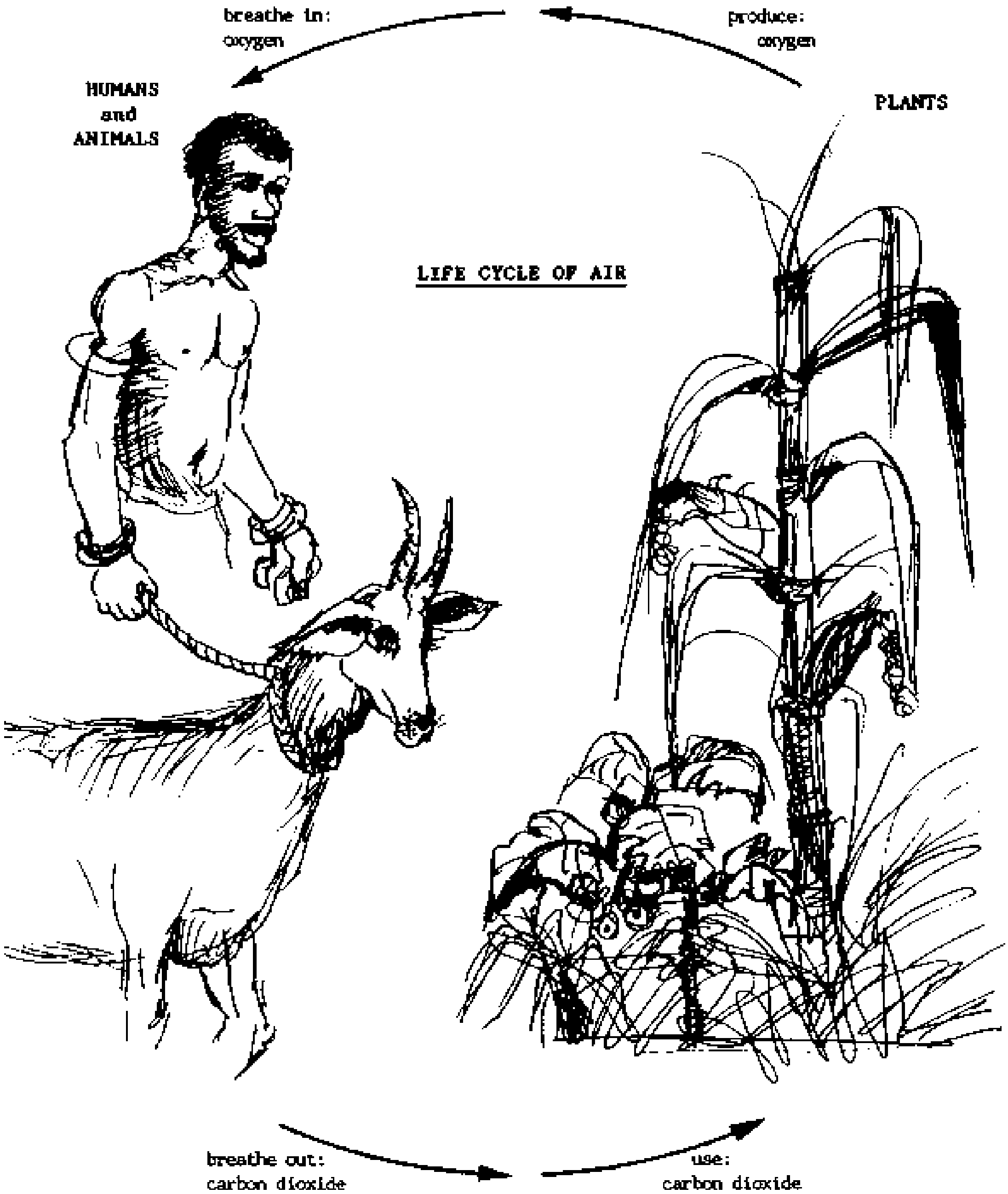

Therefore:

ONE CANNOT LIVE WITHOUT THE OTHER.

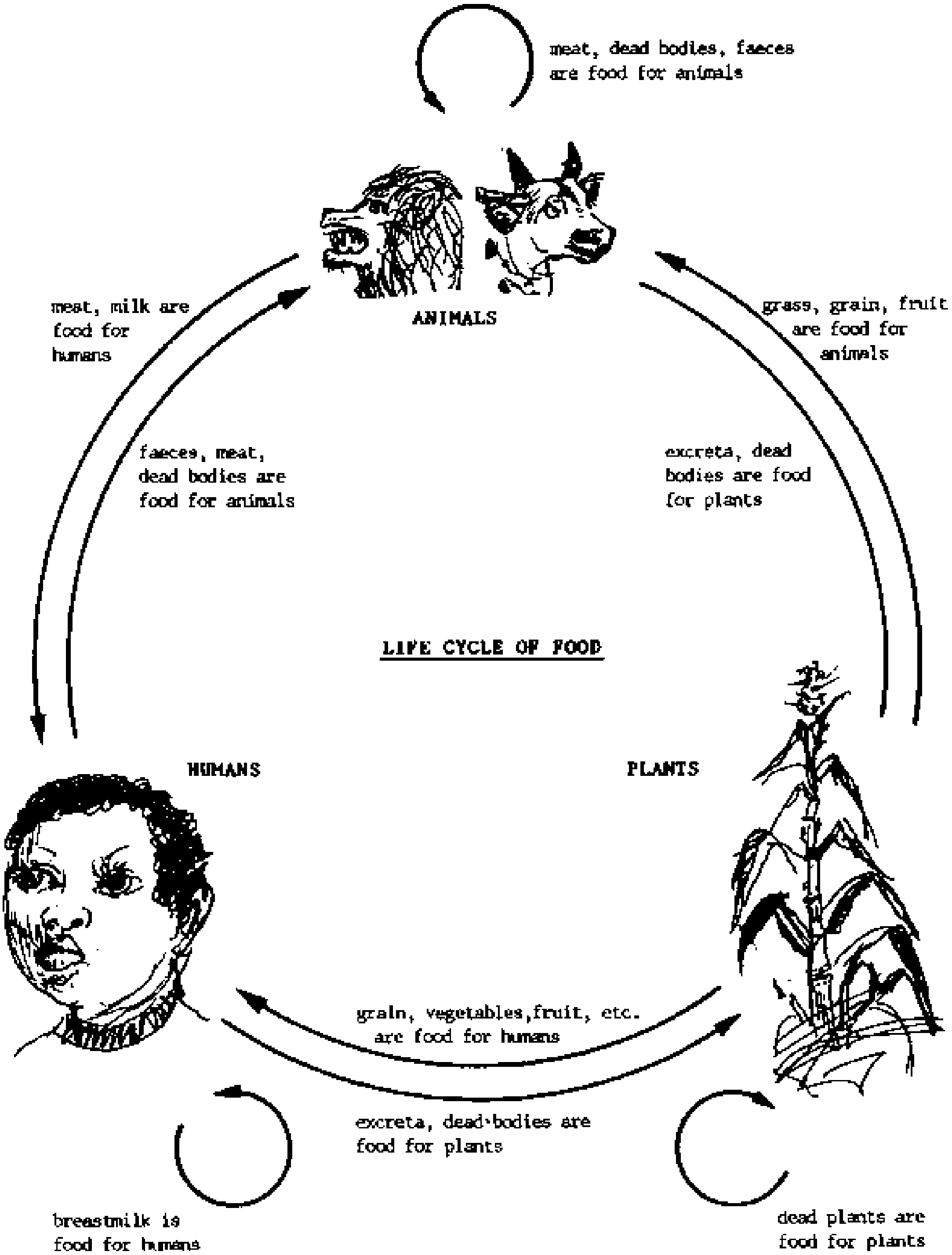

Therefore:

ONE CANNOT LIVE WITHOUT THE OTHER

B) Use of Human Excreta

Problems will arise if the life cycle is interrupted at any place. Using human excreta is one way of fitting into the life cycle.

The following is valid, when using human excreta:

	turns into	
Waste	------------------>	Resource

However, because of the dangers involved, we have to pursue a double aim:

Aim 1:	Avoid Harm	--------------->	Control Diseases
Aim 2:	Support Benefits	--------------->	Utilize Fertilizer

9.3. Flies/Mosquitoes/Cockroaches

Waste disposal provides two attractive materials for the breeding of insects: rich organic material (that is faeces), and water. The presence of insects and other animal life in latrines is necessary for the break-down of the organic matter and changing it into safe manure. Problems occur if the insects leave the latrine and become carriers of disease (= vectors), either by carrying it mechanically or as hosts.

The three insects most connected with sanitation are:

A) <u>Flies</u>

There are eleven families of flies connected with waste disposal. The most common are the house fly and the blow fly. Their main breeding place is not latrines, but garbage, the house fly preferring more solid material, the blow fly more liquid one.

A female fly lays its eggs into excreta or garbage, about 130 in a batch and 21 batches in her lifetime, that is altogether about 2,730 eggs. After one or two days, maggots come out of the eggs, living on the waste. The maggots become pupae after about ten days and after another 3 to 6 days the adult fly creeps out of the pupa. It lives for about 30 days. The process of developing from egg to maturity varies according to the temperature between 12 and 46 days.

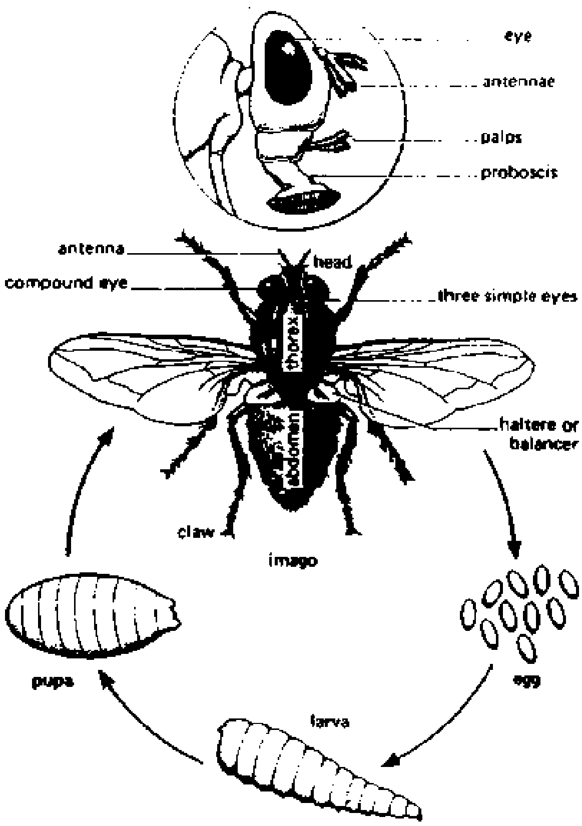

Flies can fly up to five miles in a day and, thereby, transmit diseases over quite a distance.

House and blow flies transmit germs and worm eggs by

- carrying them on the hairs of their feet and body,
- defaecating (every few minutes),
- vomiting.

Other flies transmit diseases by being hosts to parasites or germs and injecting them into the blood of a person when they bite, e.g. sand flies, black flies and tse-tse flies.

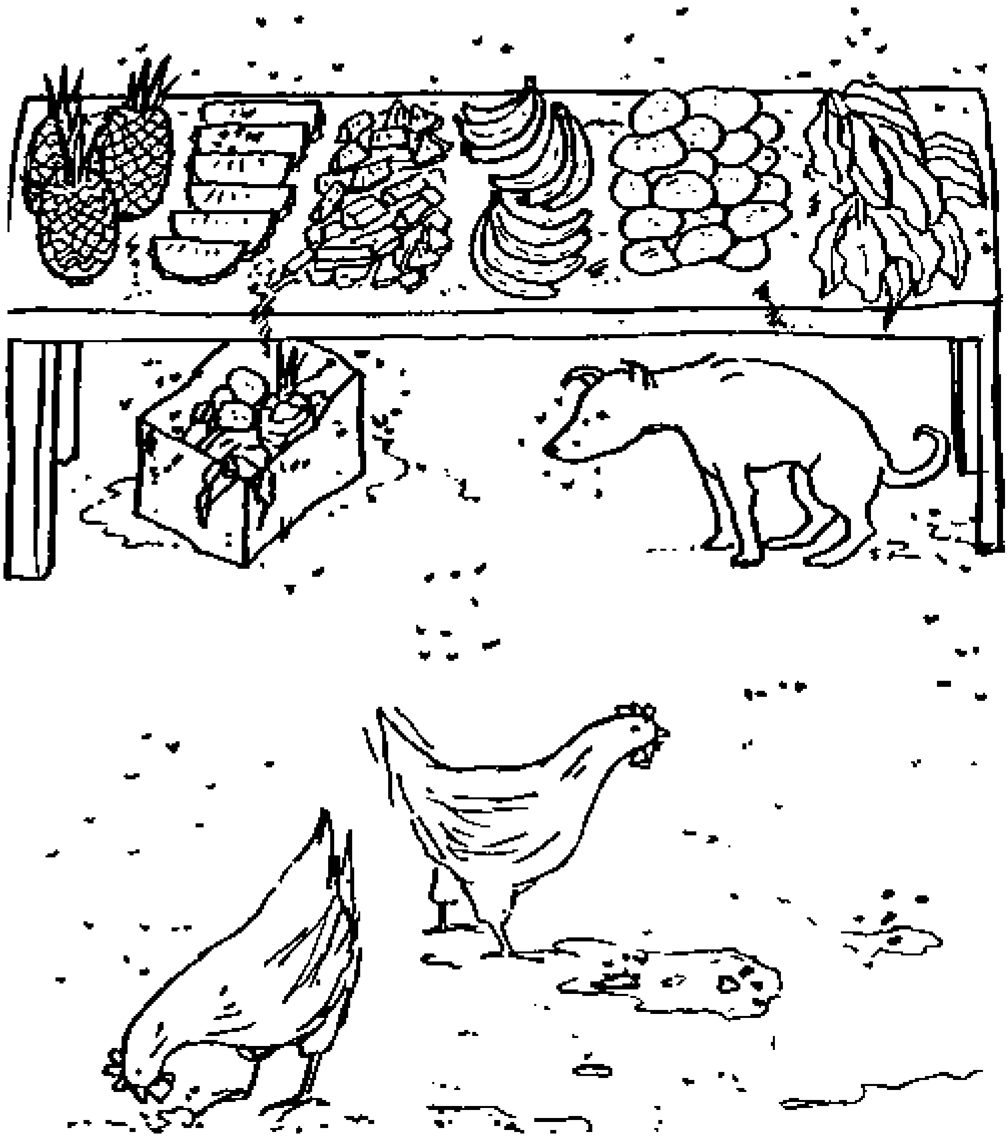

Flies can be controlled in the following ways, most effectively, if method 1 and 2 are combined:

1. Mechanical Control

- Keep general cleanliness.
- Eliminate breeding places, e.g. garbage heaps.
- Build and use latrines properly.
- Use screening, especially for places where food is kept.
- Use a fly-swatter.
- Build and use fly-traps:

Example 1:

Screened ventpipe for a latrine

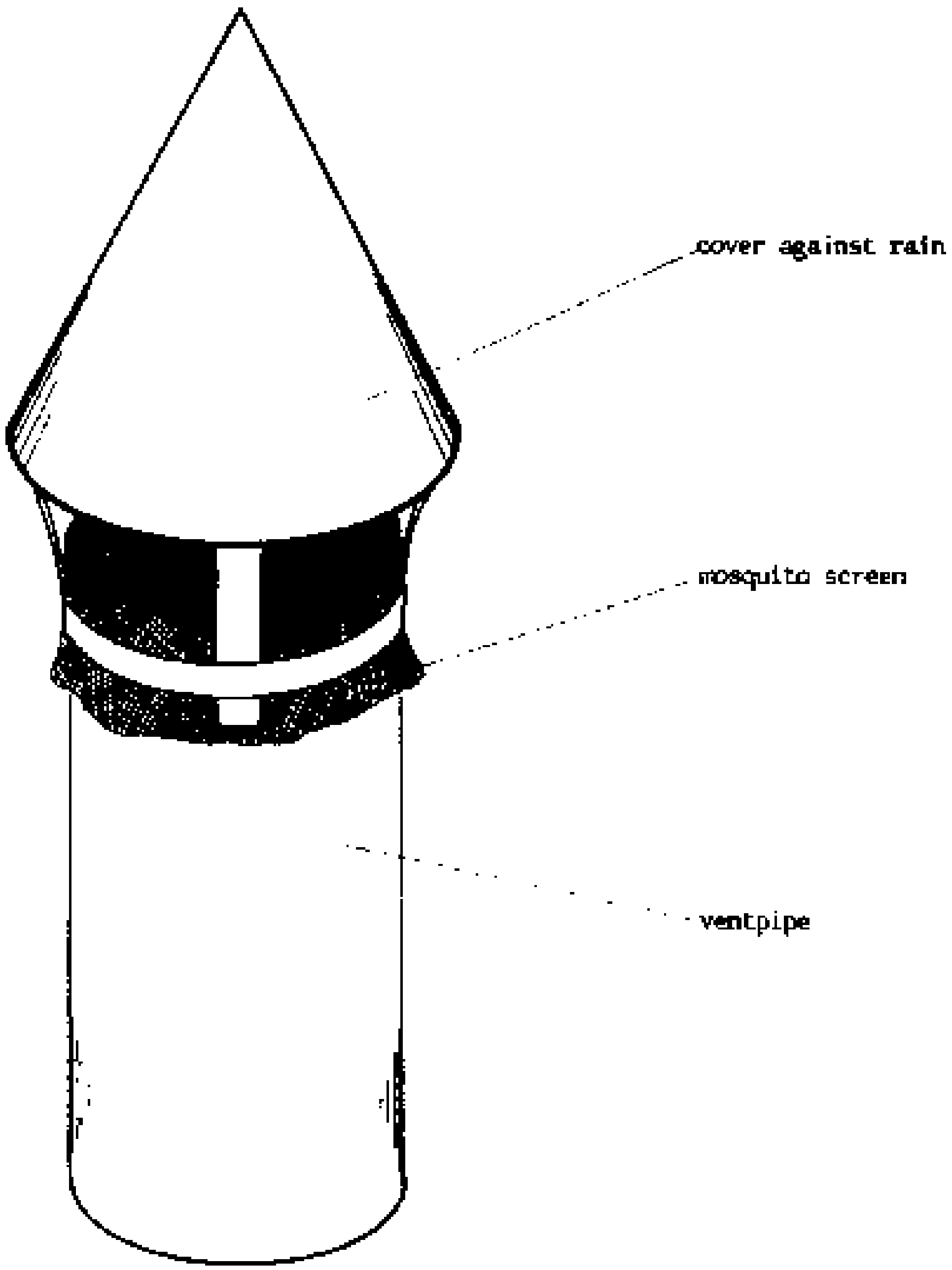

Example 2:

Fly-trap window in a latrine

ISOMETRIC VIEW OF CUT FLY-TRAP WINDOW

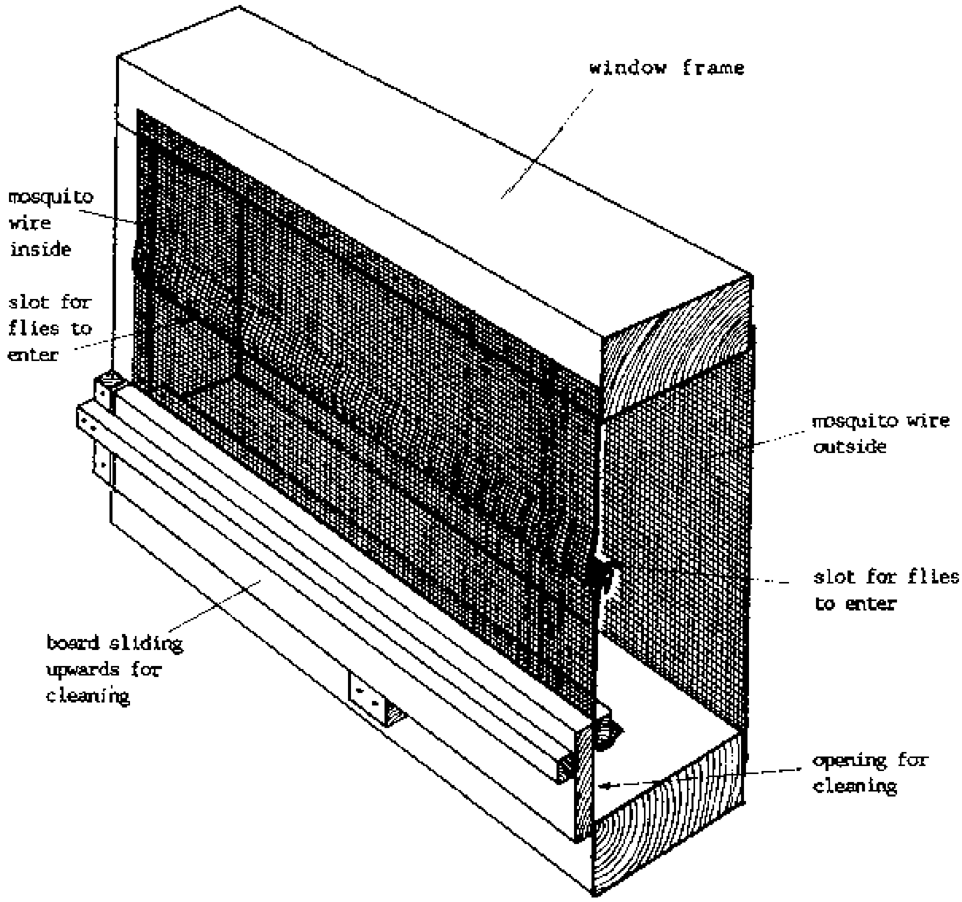

A latrine is usually dark, and the flies are attracted by the light falling in through the window. They enter the fly-trap in the window, cannot escape and die.

The trap is made in a very simple and inexpensive way. Mosquito wire is nailed on the window frame inside and outside. The flies will be trapped in between. The mosquito wire on the inside consists of two parts. They are nailed in such a way, that there is a little overlapping slot in between them, about 5 mm open. The flies will enter through this slot. Another slot of about 3 cm is left open in the bottom for cleaning out the dead flies. This opening is covered with a board, which can slide upwards to allow cleaning. The dead flies can be given to the chicken as food. Such a trap will not catch all flies, but most of them.

Example 3:

Fly-traps attached to the squatting hole of a latrine

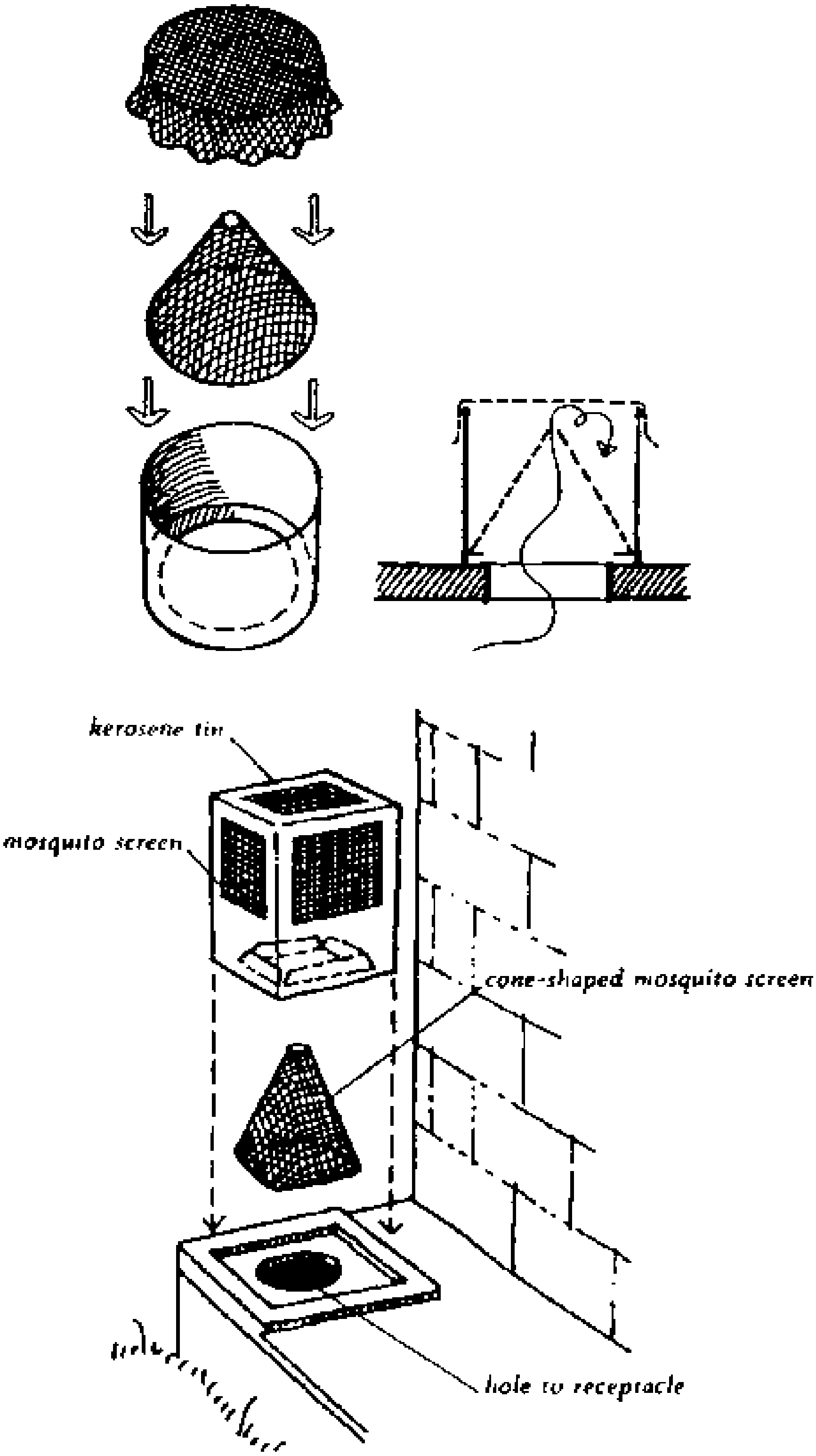

Example 4:

Free standing fly-trap with bait

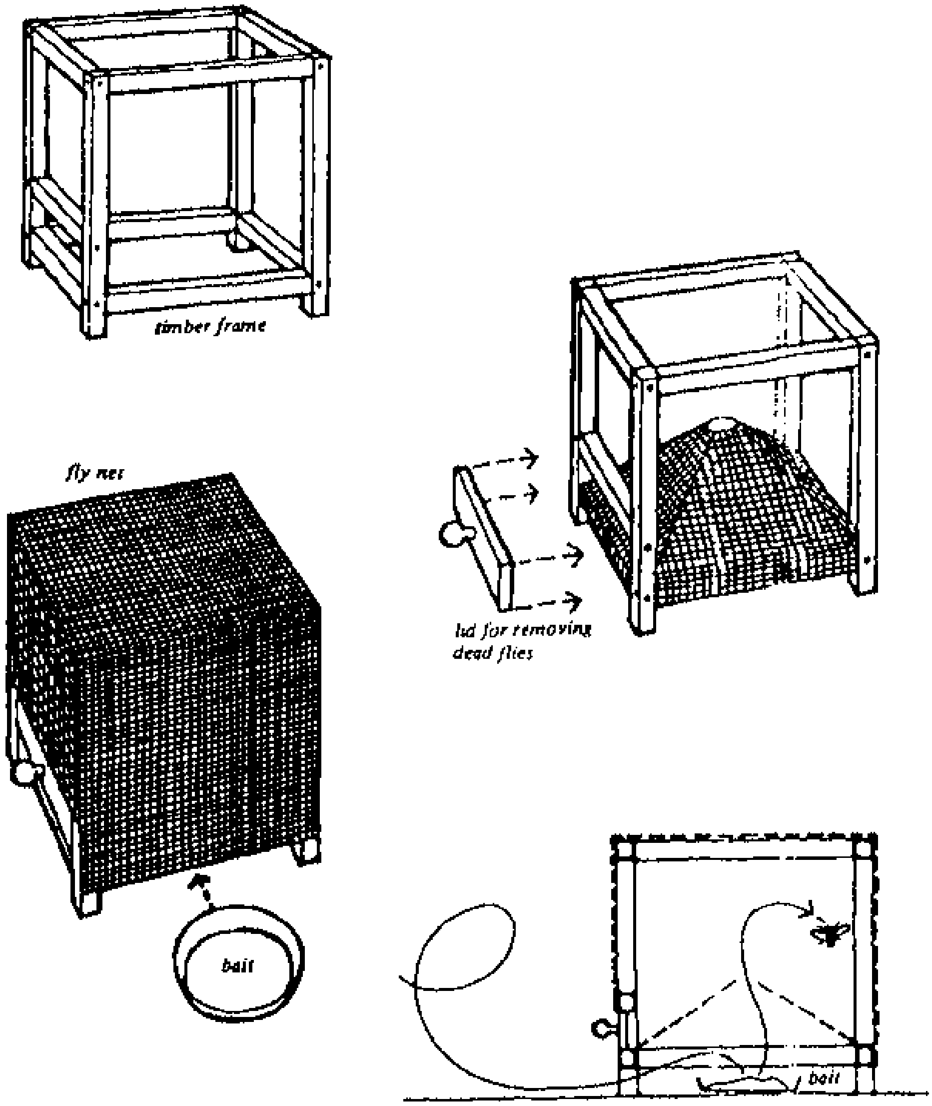

2. <u>Biological Control</u>

Encourage predators and parasites which live on flies (and mosquitoes) like frogs, lizards, chamaeleons, spiders. Also some birds live mainly on flies and mosquitoes.

3. <u>Chemical Control</u>

Using pesticides can be more harmful to human beings and domestic animals than it is for the pests they shall control. It will also kill the enemies of the flies and mosquitoes. The flies and mosquitoes will develop resistance quickly and will not be affected anymore by the poison.

If chemical control has to be used, take all precautions necessary (see 9.22).

4. <u>Thermal Control</u>

As 40°C is the lethal temperature for mosquitoes and 49°C for flies, burning rubbish or pouring boiling water over it will kill all eggs and larvae. However, this method is dangerous and of limited use, especially for compost latrines.

B) Mosquitoes

Mosquitoes breed in water and some kinds especially in foul water, that is flooded latrines, septic tanks, drains, etc.

There are two types which transmit diseases. That is Anopheles, transmitting malaria, and different Culicinae mosquitoes, transmitting filariasis, yellow fever, Dengue fever, and other virus diseases. The transmission happens when an infected mosquito (only the female) is sucking blood, which it needs to do before laying its eggs, and thereby, injecting the parasites into the blood stream of the person bitten. Other mosquitoes will be infected when sucking blood from this person, and then spread it to other people.

Concerning control see the chapter about flies. The most important is the eradication of breeding places (like filling up pools with standing water),keeping grass short, having screening in the house and keeping doors shut after dusk, and using mosquito nets in order not to be bitten and infected.

C) Cockroaches

Cockroaches need about 7 to 15 months to develop from egg into adult. They also depend on darkness. They are living on organic material and may move from waste matter to food if a place is not kept clean. However, no known disease is spread by cockroaches. They are not dangerous like flies, but rather a nuisance. The best control is to cover food properly to give them no access, and to keep the house clean, airy and light.

9.4. "Germs"

When talking about "germs" in connection with diseases, we have to consider different types of living creatures, most of them too small to be seen by human eyes (= micro-organisms).

They are as follows:

A) Bacteria

Bacteria are everywhere, e.g. 100 millions in 1 gram soil, and also in our bodies. They are adjusted to it and many are helpful and even necessary. We use bacteria, e.g. when making cheese or vinegar. Bacteria do most of the work to transform dead organisms into harmless matter. Most bacteria are not pathogenic (= causing disease).

Bacteria are distinguished as

- aerobic = needing air to live,
- anaerobic = needing no air to live
- facultative = living with or without air.

They reproduce by dividing themselves.

Their names are given according to their shape, e.g., bacilli are rod-shaped bacteria.

Diseases caused by bacteria are for example

- tuberculosis (TB)
- diphteria
- leprosy
- typhoid
- cholera
- tetanus
- pneumonia

- menegitis
- syphilis
- diarrhea (some kinds).

Diseases caused by bacteria can be treated by antibiotics like penicillin etc.

B) <u>Viruses</u>

Viruses are smaller than bacteria. They are consisting of nuclear material (DNA), enclosed in a coat of protein. They are parasites and cannot live outside living cells. They multiply rapidly by division.

Diseases caused by viruses are for example

- measles
- influenza (flu, cold)
- small pox
- hepatitis
- polio
- yellow fever
- aids

Virus-caused diseases cannot be treated with antibiotics, as viruses do not respond to them.

C) <u>Protozoae</u>

Protozoae are single celled small animals which can move. Amoebae are a kind of protozoae.

Amoebae divide themselves into either

- cysts:

  They are covered with a coat and carried outside the body. They are not harmful, unless they reach the intestines of somebody, where the coat breaks and reproduction starts.

- two new amoebae:

  Those divide again and again and live on the mucus covering the intestines. By that they destroy the lining of the intestines and cause bleeding. They move to the liver, but cannot infect other people, as they die shortly after leaving the body.

Diseases caused by protozoae are for example

- amoebiasis
- malaria (transmitted through mosquitoes)
- sleeping sickness (transmitted through tse-tse fly)
- giardiasis

D) <u>Worms</u>

Worms are animals, laying eggs. Some can be several metres long when living inside one's body.

Infection happens, except for the hook worm which comes through the skin, through the mouth by infected fingers, food or water.

The following diseases are caused by worms for example:

- schistosomiasis/bilharziasis (transmitted through water snails)
- filariasis (transmitted through mosquitoes)

- onchoceriasis (transmitted through flies)
- tape worm (transmitted through pig/cattle/fish)
- ascariasis
- whip worm
- pin worm

Clean water and proper sanitation plus personal hygiene and cleanliness are the best method to prevent most of the above diseases. If affected, get proper treatment by a trained person and take the full course of medicine prescribed as it was ordered.

9.5. Diseases Transmitted by Faeces

The following diseases are transmitted by faeces or urine in different ways (see also 8.6):

- polio
- hepatitis
- gastroenteritis
- cholera
- typhoid
- bacillary dysentry
- amoebiasis
- giardiasis
- worms
- schistosomiasis (= bilharziasis)
- filariasis and others.

Therefore:

It is indispensable to dispose of human excreta in a sanitary way if we want to reduce and combat the sicknesses transmitted via faeces.

If you want to reduce your suffering from intestinal diseases and the suffering of your family, try to keep to the guidelines and suggestions in the following chapters.

Most time, you cannot <u>see</u> how the contamination is spread and reaches your body. It can happen for example in the following two ways:

<u>Possible Way, How Intestinal Diseases Can Spread</u>

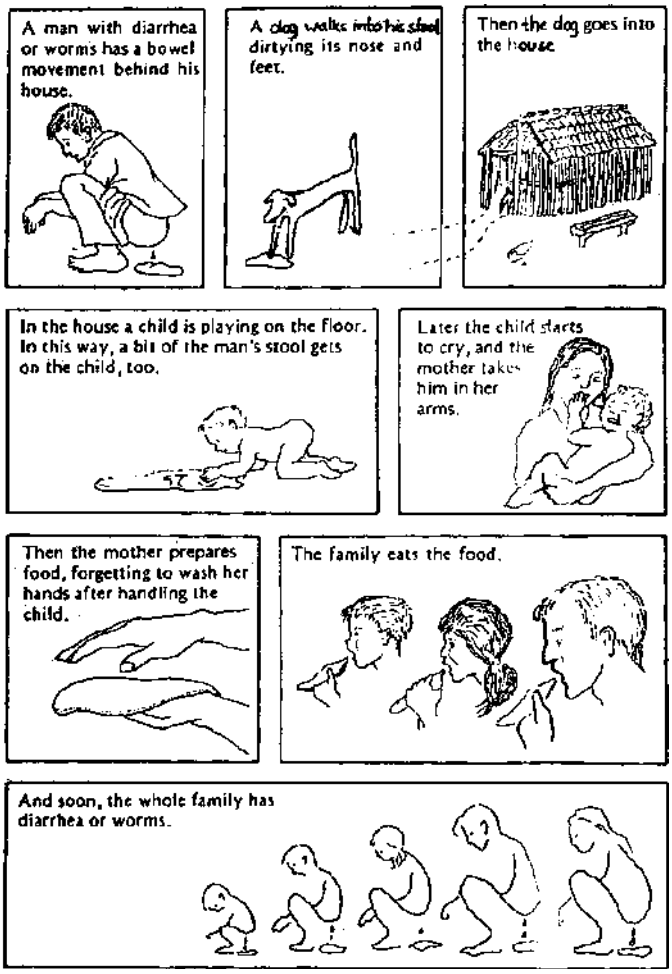

Another Way, How Intestinal Diseases Can Spread (see also 8.38/1f)

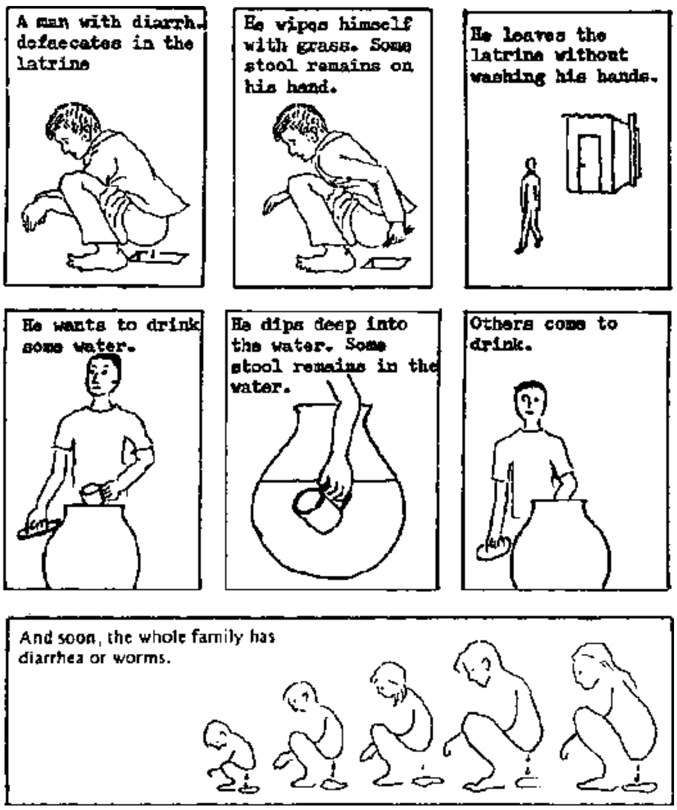

9.6. Basic Guidelines for Cleanliness (Hygiene)

Lev 5,2-3.21.24; 12; 15,7.8.11.12.15.31; Num 19,11.15.16.19; Ez 36,25.29;
Mk 7,14-23; Mt 15,2.10-20; Lk 11,39; Acts 10, 15.28: 11,8-9; 2 Cor 6,6

These are the most important guidelines to be followed:

1. Always wash your hands with soap after a bowel movement. Soap is cheaper than treatment of diarrhea. Have water and soap in or near the latrine, if possible, to remember easily.

2. Always wash your hands with soap before the meals and not only afterwards. If you have no soap, use ashes. If water is scarce, use the "leaky tin" for hand-washing.

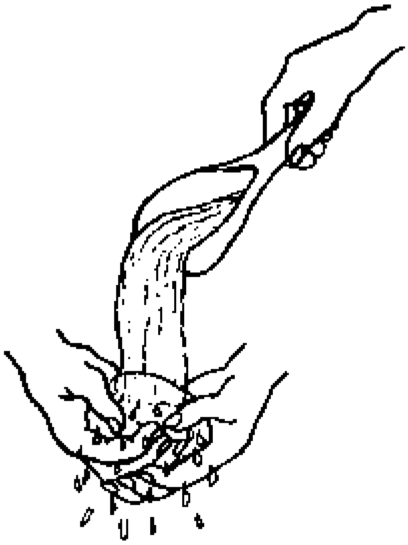

LEAKY TIN:

- Find a small empty tin.
- Punch a small hole near its bottom with a nail.
- Hang the tin from a branch or fix it on a pole.
- Pour only one small cup of water into the tin.
- Mash your hands in the fine stream of water leaking through the hole.
- Plant a tree seedling below the tin.

Design: AMREF, Nairobi

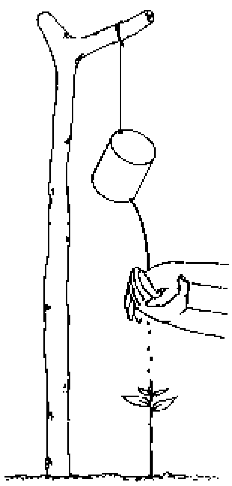

3. After cleaning a baby after a bowel movement, wash your hands with soap.

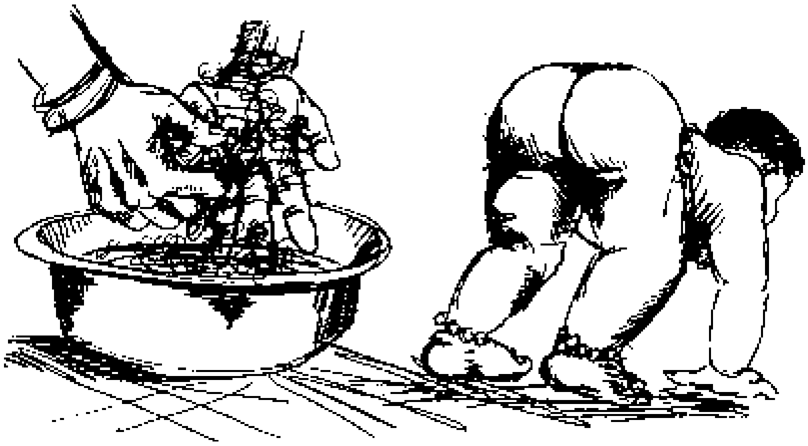

4. Bathe often. This prevents skin infections.

5. Brush your teeth every day in the morning and evening, and after each time you ate sweets as soon as possible.

6. Cut your finger nails short.

7. Do not spit on the floor or wall inside the house. Spit can spread disease. Cover your spit outside with some dust.

8. De-louse the whole family often. People with lice should cut their hair short, comb it several times per day and wash it with soap. Against clothes-lice boil the clothes and iron it. Lice and fleas carry many diseases.

9. Do not go barefoot or allow children to do so in areas where hook worm or sand fleas are common.

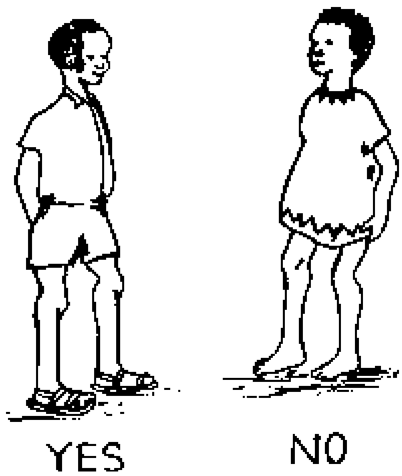

10. Do not let dogs or cats lick children or climb up on beds or tables or come near to the cooking place. Dogs and cats, too, can spread diseases, especially worms.

11. Drink safe drinking water (from a safe source or boiled and not contaminated afterwards, from a clean cup).

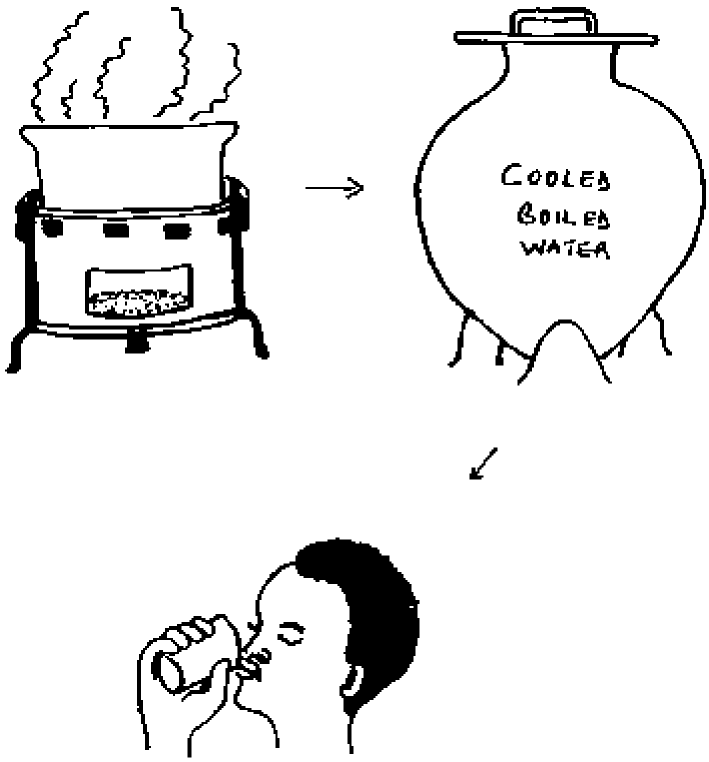

12. Before eating fruits or vegetables, wash them well with water you can drink safely. Insist that children do the same.

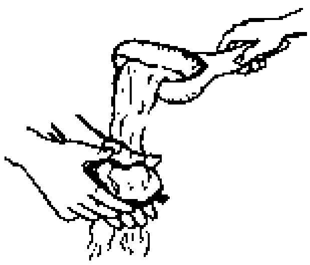

13. Only eat meat that is well cooked or roasted. Be especially careful with liver and intestines.

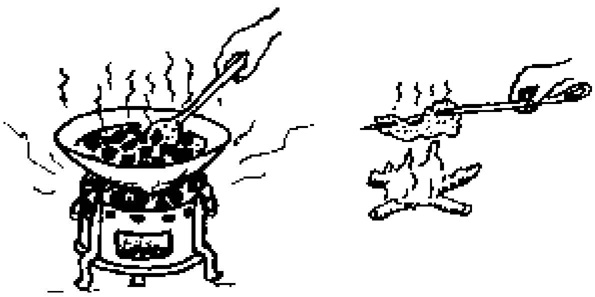

14. Drink only milk which is boiled.

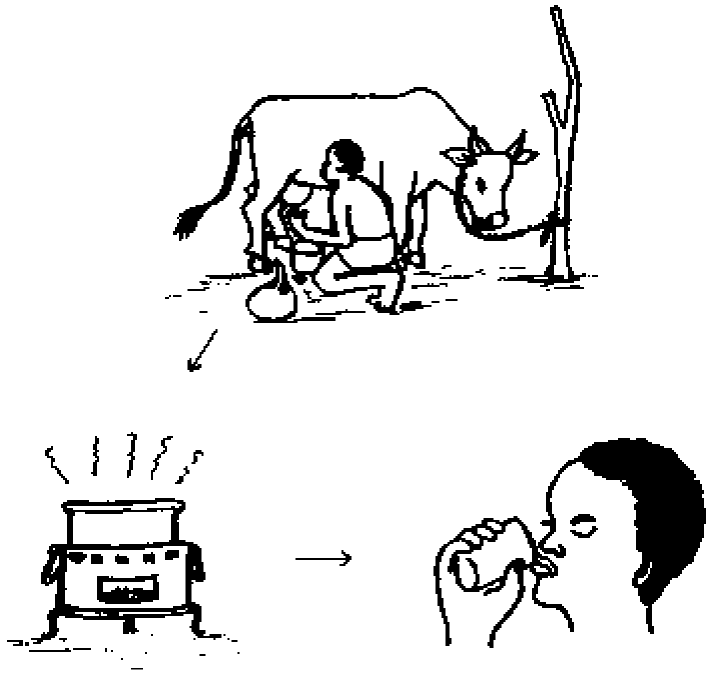

15. Do not eat food that is old or smells bad. It may be poisonous,

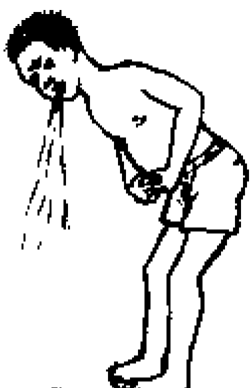

16. Do not let flies and other insects crawl on food; these insects can spread diseases. Do not leave food scraps around; put them into your latrine. Do not leave dirty dishes lying around, as they attract flies and breed germs. Protect food by keeping it covered or in cupboards with screens.

17. People with tuberculosis, flu, cold, hepatitis or other infectious diseases must eat from separate plates and drink from separate cups.

18. Put dishes on a stand after cleaning them and not on the ground.

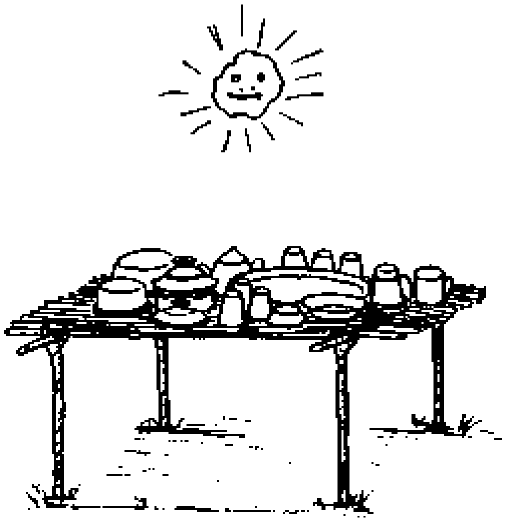

19. Hang and spread sheets and blankets in the sun often. If possible, do not spread them on the ground, but hang them up. Wash clothes and underwear frequently and hang them up for drying. Iron if possible.

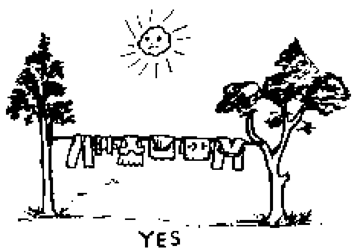

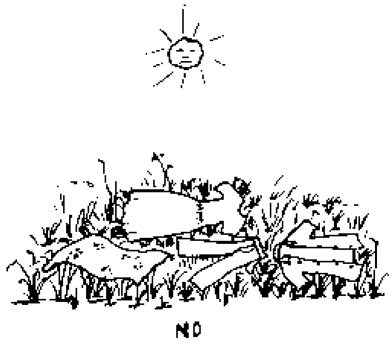

20. Clean the home and compound often. Fill in cracks and holes in the floor and walls, where fleas, bedbugs, cockroaches and scorpions can hide. It is very advisable to smear the floor regularly.

21. If children or animals have a bowel movement in or near the house clean it up at once. Bury it or throw is into the latrine. Better even, get a children's squatting slab and teach the children how to use it.

Reflect on which of these guidelines you have followed already?

Are the guidelines practicable?

Which ones have you not followed yet? Why? Could you change something?

Do all members of your family follow these guidelines?

Discuss all this with them.

9.7. Types of Disposal Systems

There is a wide range of disposal systems for human excreta (= sanitation systems). The following is an overview about the most common sanitation systems. The list is not complete and there are also mixtures of different types in use, but it includes all the systems used in Sudan.

A) <u>Overview of Sanitation Systems</u>

see table page 9.7/2

B) <u>Short Description of the Different Sanitation Systems</u>

1. <u>Defaecation in the Open</u>

see 9.9

2. <u>Pit Latrine from Local Materials</u>

see 9.10

3. Pit Latrine from Permanent Materials

A pit latrine from permanent materials consists of a pit which may be lined, a slab, and a superstructure from permanent materials like bricks, etc.

4. VIP

see 9.11

5. Double Vault Compost Latrine

see 9.12, 9.13, 9.14, 9.16, 9.17, 9.18

6. Bucket Latrine

A bucket latrine consists of a permanent building with a squatting slab. A bucket is placed from outside underneath the squatting slab. The bucket has to be emptied every time it is full. The contents have to be buried nearby. Handling of fresh excreta is necessary. Flies have easy access to the excrements.

7. Pour-Flush Latrine

A pour-flush latrine consists of a building, a squatting slab with a pan with a waterseal, and a pipe leading to a soak-away pit. After each use, one must flush the latrine with 2-3 lit water. The liquids soak away into the ground, eventually into the groundwater; the sludge has to be emptied from time to time by truck. The septic tank provides a breeding place for mosquitoes.

OVERVIEW OF SANITATION SYSTEMS

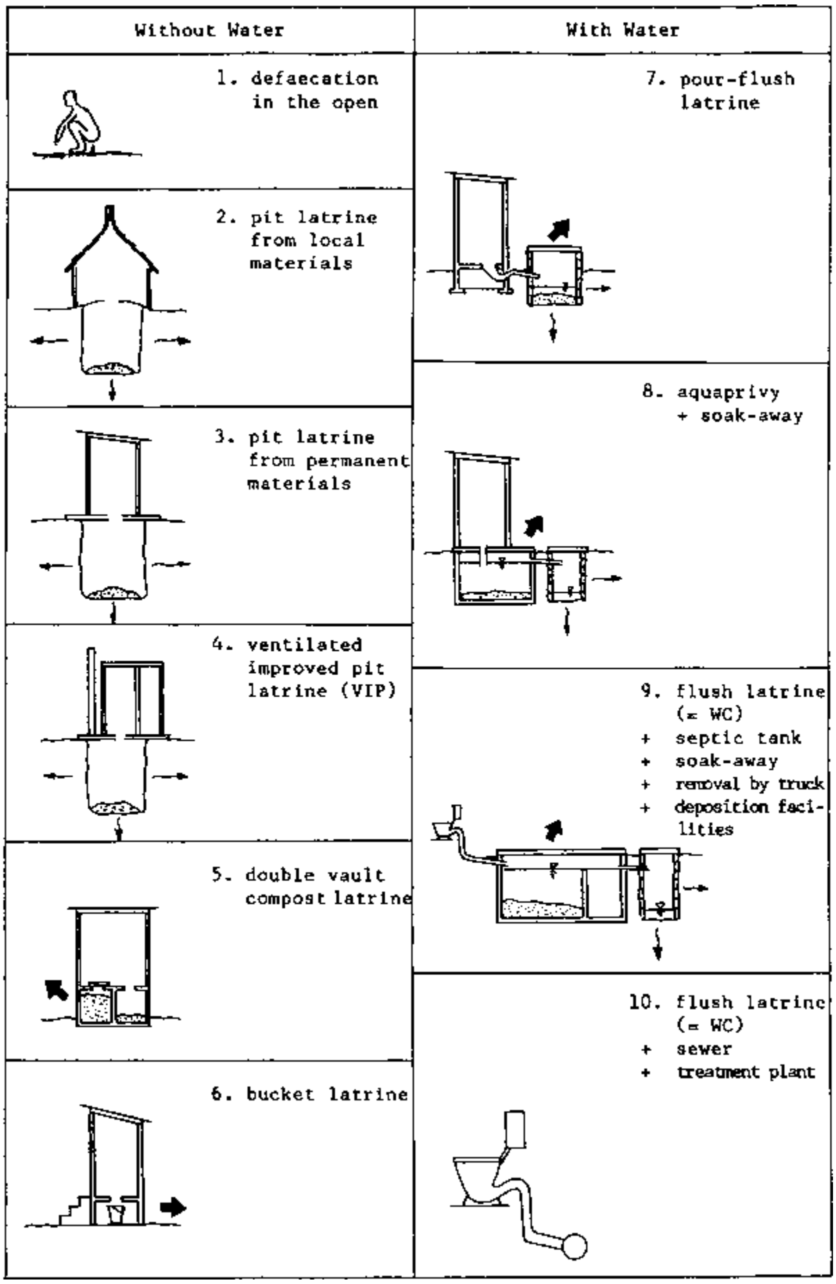

8. Aquaprivy

An aquaprivy consists of a superstructure over a septic tank. A chute (= large diameter pipe) reaches into the water in the septic tank from the squatting hole and, thus, provides a seal against smell and insects. The chute has to be washed regularly; water has to be filled into the tank regularly in order to keep the water table constant. Excess liquid flows through an overflow pipe into a soakaway pit and from there into the ground and, eventually, into the groundwater. From time to time the sludge in the septic tank needs to be emptied. For this the superstructure and the slab have to be removed. The gases from the septic tank are dangerous; the septic tank provides a breeding place for mosquitoes.

9. Flush Latrine and Septic Tank

A flush latrine (= WC = Water Closet) is connected with a piped water supply. After each use the toilet bowl is to be flushed with about 20 l water. The contents flow through pipes into the septic tank. Excess liquid flows through an overflow pipe into a soak-away pit and then into the ground and, eventually, the groundwater. The septic tank has to be emptied by a truck regularly. The unsafe contents have to be deposited somewhere. The septic tank provides a breeding place for mosquitoes. Blockage and insufficient water supply make the WC unsafe and inconvenient.

10. Flush Latrine and Sewer

If a flush latrine (WC) is connected with a sewer, the flushed contents flow through a pipe into the main sewer (= a large diameter pipe under the street), and from there into a treatment plant near the next river. There the sewage should be treated (in optimal case mechanically, biologically and chemically). Then the cleaned water is released into the river. Sewage system and treatment are technically sophisticated and very expensive. Therefore sewage water is very often released into rivers without sufficient treatment.

C) Comparison of the Different Sanitation Systems

The features of the different sanitation systems are compared in the following table:

System	No.	Name	Rural Application Possible?	Urban Application Possible?	Construction Costs?	Operating Costs?	Kind of Labour Required?	Selfhelp Possible?	Soil Conditions Required?	Water Required?	Possible Positions for Use	Anal Cleaning possible with....	Investment Off-site necessary?	Re-use of Excreta Possible?	Safe for Health?	Assistance from Institution Required?	Not Suitable if...
without water	1	defaecation in the open	not suitable	not suitable	none	none	none		any	no	squatting	anything: toilet paper ordinary p. grass, corncobs, sticks stones, water	no	partly	dangerous	no	not advisable
	2	pit latrine from local materials	yes	partly	low	low	unskilled labour	yes	stable, permeable soil groundwater below pit	"	squatting or sitting	"	"	no	safe if well kept	II	if ground-water near
	3	pit latrine from permanent materials	"	yes (in medium density areas)	medium	"	some skilled labour	"	"	"	"	"	"	"	"	"	"
	4	VIP (ventilated improved pit latrine)	"	"	"I	"	"	"	"	"	"	"	"	"	"	"	"
	5	Compost Latrine (double vault)	"	"	"I	"	"	"	any(can be built above ground)	"	"	"	"	yes	"	"	if socially not accepted
	6	bucket latrine	no	no	"	high	"	"	"	"	"	"	deposition pit	partly	dangerous	some	not advisable at all
with water	7	pour flush latrine	partly	yes (in medium density areas)	II	medium	"	partly	stable, permeable soil groundwater deep	yes, near latrine	squatting	only toilet or ordinary paper, water	treatment facility for sludge	"	only if well kept and water available danger of mosquito breeding	availability of trucks	if insufficient water and grass etc. used for anal cleaning
	8	aquaprivy + septic tank	"	"	"	"	"	"	"	"	squatting or sitting	anything	"	"	"	"	if insufficient water
	9	flush latrine + septic tank + soak-away + removal by truck + deposition facility	no	"	high	high	skilled labour	no	"	piped water in the house	"	only toilet paper and water	"	"	"	"	if insufficient water and grass etc. used for anal cl.
	10	flush latrine + sewer + treatment plant	"	yes (in high density areas)	very high	very high	engineer + skilled labour	"	any	"	"	"	sewer + treatment plant		only if well kept and water available	administration of sewers and treatment facilities	"

9.8. Selecting the Right Latrine

Ez 34,17-19

There are many different sanitation systems. Which is the best?

There is no "best latrine" for all conditions everywhere.

Instead, the best solution for each given condition needs to be selected each time again.

In the following, we give suggestions how to select the right type of latrine for certain conditions. These suggestions are the subjective opinion of the authors and the project staff. Others have other opinions because they have different priorities and different assumptions.

A) Criteria (= Guidelines) for Selecting the Right Latrine

We suggest that the following criteria shall guide our choice:

1. Protection of groundwater and surface water.

2. Protection of health.

3. Saving water.

4. Acceptability by the community.

5. Economic suitability.

Protection of groundwater is the first priority, because groundwater is one of the most valuable and essential resources of the people. In most areas, where people depend on on-site sanitation, they also depend on on-site water supply. Protection of the groundwater is a "must" if we want to protect health and well-being.

Protection of both, individual and public health is essential as well. Therefore, sanitation systems which allow and encourage mosquito breeding and, thus, malaria as well as other transmission of diseases, are questionable.

Saving water, that means to use as little water as possible, is also a high priority, because the majority of people has no access to clean and sufficient water. It seems to be irresponsible to waste water on sanitation, while other reasonable options are available, and at the same time uncountable people have to carry water over long distances and do not get sufficient and clean water at all.

The chosen sanitation system must be understood and accepted by the users. However, this depends very much on and can be influenced by education.

The system should be affordable for the majority of people. It is a great advantage if the users can maintain the system on their own and with their own resources.

B) Sanitation with Water

All sanitation systems with water have the following disadvantages:

1. They support mosquito breeding and, thus, malaria and other sicknesses. Septic tanks and their lids are only tight in theory. Normally, compounds with septic tanks have mosquitoes during the whole dry season. The same is valid for pour flush latrines and aqua privies.

2. Water is not available in such quantities (in a dry country like Sudan) that everybody

could use a sanitation system with water. Even in the urban areas, there are many people without sufficient water supply even for drinking, if the water supply is insufficient, all sanitation systems with water become unsafe and inconvenient.

3. Sanitation systems with water endanger the groundwater and sometimes the surface water. The overflow is directed into the groundwater by soak-away pits. Also, many septic tanks are leaking or flooded during rainy season.

4. Sanitation systems with water are considerably more expensive than those without water.

5. Sanitation systems with water spoil quickly if ordinary paper, grass, leaves, corncobs, small sticks or stones are used for anal cleaning.

6. Flush latrines are very often discriminating for village people who never learnt to use them.

Because of these reasons, mainly the first two, we suggest:

Discourage all sanitation systems with water.

The exception may be very crowded urban areas with multi-storey buildings (see also 8.29/5).

C) <u>Sanitation Systems without Water</u>

For obvious reasons like cleanliness, public health, contamination of ground and surface water, and handling of fresh excreta, we suggest:

Discourage defaecation in the open. Discourage bucket latrines.

Thus the choice remains between the different types of pit latrines and the compost latrine.

Groundwater protection is a high priority. Therefore:

Avoid flooded latrine pits by any means.

because they

- endanger the groundwater by bacteriological pollution,
- increase the nitrates and nitrites in the groundwater,
- encourage mosquito breeding,
- are a nuisance for the users,
- can collapse easily (see also 8.7/4).

Therefore:

If the groundwater in rainy season is 2 m below the bottom of the pit, and the next well is more than 50 m away, the pit latrine is suitable.

The reasons are:

The pit latrine

- is simple to build,
- is simple to use,
- and misuse can be corrected easily.

The type of pit latrine depends on the local conditions and the availability of materials.

For areas with high groundwater table there are three options:

- bucket latrine,
- flush latrine with sewer,
- compost latrine.

The bucket latrine is excluded because of hygienical reasons, the flush latrine is beyond reach (for the majority). Therefore, the compost latrine remains the only alternative if we insist on the groundwater being protected.

Therefore:

The compost latrine is the suitable solution if either

- the groundwater table is high (less than 4 m at least temporarily), or
- the subsoil is rock (digging deep is not needed), or
- the subsoil is black cotton soil, or
- the owner wants a well and a latrine on the same compound, or
- the owner is interested in a latrine which will never be finally full,
- the owner is very interested in fertilizer.

A great deal of care and attention for the latrine is necessary, as well as repeated health education. The concerned people (users, project staff) must be ready for that. This is a condition for the functioning of the compost latrines. The costs for a pit latrine and a compost latrine are about the same. Therefore, the compost latrine turns out to be cheaper on the long run if we consider its life time.

D) Maintenance of Sanitation Systems

There is no maintenance free sanitation system.

except defaecation in the open.

If people want to live in more densely populated areas and remain healthy, there is no way out: they will have to participate in the up-keep and maintenance of a sanitation system.

The up-keep and maintenance is the most difficult part of establishing a sanitation system.

This is more difficult than any technical problem. This is valid for all types of sanitation systems. We can see that on the examples when the up-keep and maintenance do not function:

- smelly, dirty latrines, flooded with water, with many flies;
- overflowing buckets;
- blocked pour flush latrines;
- blocked WCs;
- smelly septic tanks;
- streets flooded by not-functioning sewers.

Most books about sanitation are based on the assumption that sanitation with water is the best, only it is not (yet) reachable for most people. This is a subjective and biased opinion, based on certain priorities and the assumption that the technology most common in industrialised countries is good at all and the best for everybody. The above suggestions for the selection of a latrine differ from this opinion. They represent an approach towards water supply and sanitation in which the two fields are seen in connection with each other and on the background of the needs of the majority of people.

9.9. Defaecation in the Open

Defaecation in the open, be it behind the fence of the neighbour or in open spaces or dried up riverbeds, is dangerous. It not only harms the one doing it, but also others who can be infected by diseases transmitted from the uncovered excreta. It harms the community.

This problem was already known-in the times of the Old Testament: "You must have a latrine outside the camp, and go out to this; and you must have a mattock among your equipment; and with this mattock, when you go outside to ease yourself, you must dig a hole and cover your excrement. For Yahweh, your God, goes about within your camp to guard you and to deliver your enemies to you. Your camp must, therefore, be a holy place. Yahweh must not see anything improper among you or he would turn away from you." (Deuteronomy 23,12-14; The Jerusalem Translation)

Therefore:

Contribute yourself to reducing defaecation in the open:

- Avoid defaecating in the open.
- Construct latrines.
- Contribute to the cleaning and up-keep of the latrines you use.

However, there are situations when you are forced to defaecate in the open, e.g. on a journey or when visiting people in a village where there is no latrine. In these cases act in a responsible way:

If you are forced to defaecate in the open

- Look for a small hole or dig one with a stick.
- Cover your excreta with earth, grass and leaves.

This will ensure quick decomposition and prevent flies from transmitting germs.

In general, urine is a sterile and harmless substance. Thus it is by far less dangerous for transmitting diseases than faeces. However, certain sicknesses are transmitted by urine, too.

Therefore:

If you have hepatitis, typhoid fever, bilharzia (= schistosomiasis), leptospirosis or other serious sicknesses, always urinate into a closed latrine.

In areas with schistosomiasis (= bilharzia) nobody should urinate in the open, especially not into a river or lake.

A person with schistosomiasis has the disease for life and, unless adequately treated, will continue to pass eggs through the urine.

If you want to use urine as a fertilizer, it must be diluted by water, otherwise it will "burn" the plants (cause them harm because of the great concentration of chemical substances in the urine).

Therefore:

Dilute collected urine with water (1 part urine/5 parts water) and pour it directly in the garden as fertilizer.

9.10. Pit Latrine from Local Materials

The most simple type of pit latrine, made completely from local materials, is not an ideal solution. But in many places, for example in remote villages or very poor areas, another type of sanitation is not available for people. Therefore, it is important to make the best out of it and use the materials locally available.

Following the guidelines below can improve the latrine considerably. Spread this information among the people who may need it.

1. Select a location for your latrine which is not flooded during heavy rains, preferably a bit elevated, and far enough from the kitchen and a well, always downstream or downhill from where the water is taken.

2. Dig a pit. It should be small with straight walls, maybe 1.00 m × 1.00 m or round. It should never reach the groundwater. If the water is near or the soil can easily collapse, dig it only 1.00 m or 1.50 m deep.

3. Make a few mudblocks or take big stones. Build a collar around the pit or make the collar from mud directly. It is important that the level of the "slab" is above ground. Fill earth around and compact it well.

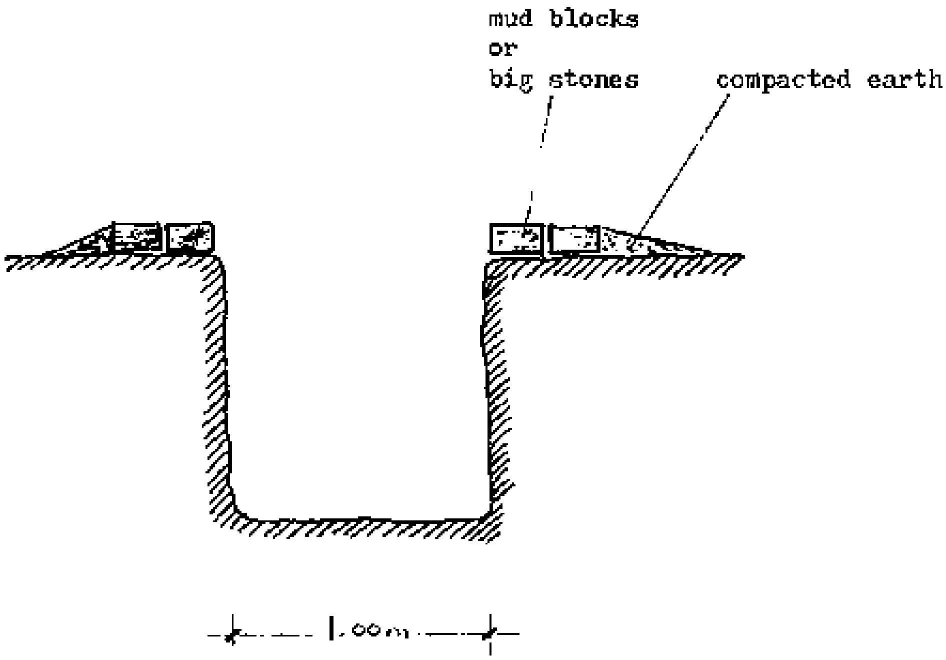

4. Construct a slab from poles, covered with earth. The squatting hole must be 20 × 40 cm. If it is too small, the latrine will not remain clean.

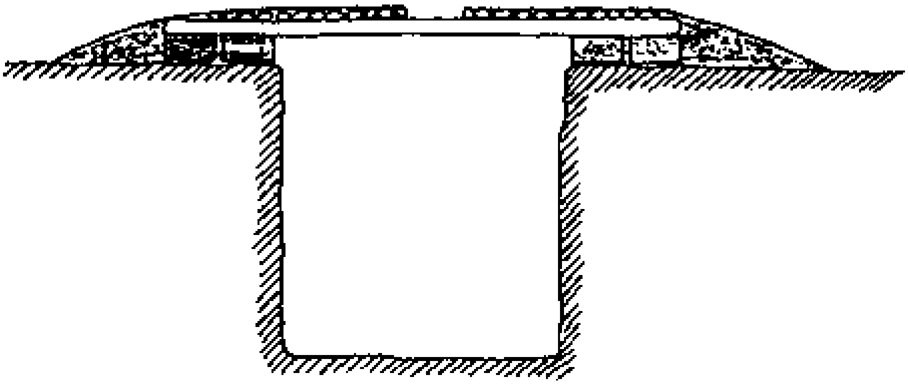

5. Build a roof over the latrine and a wall around if, it is most important to prevent rainwater from entering the pit.

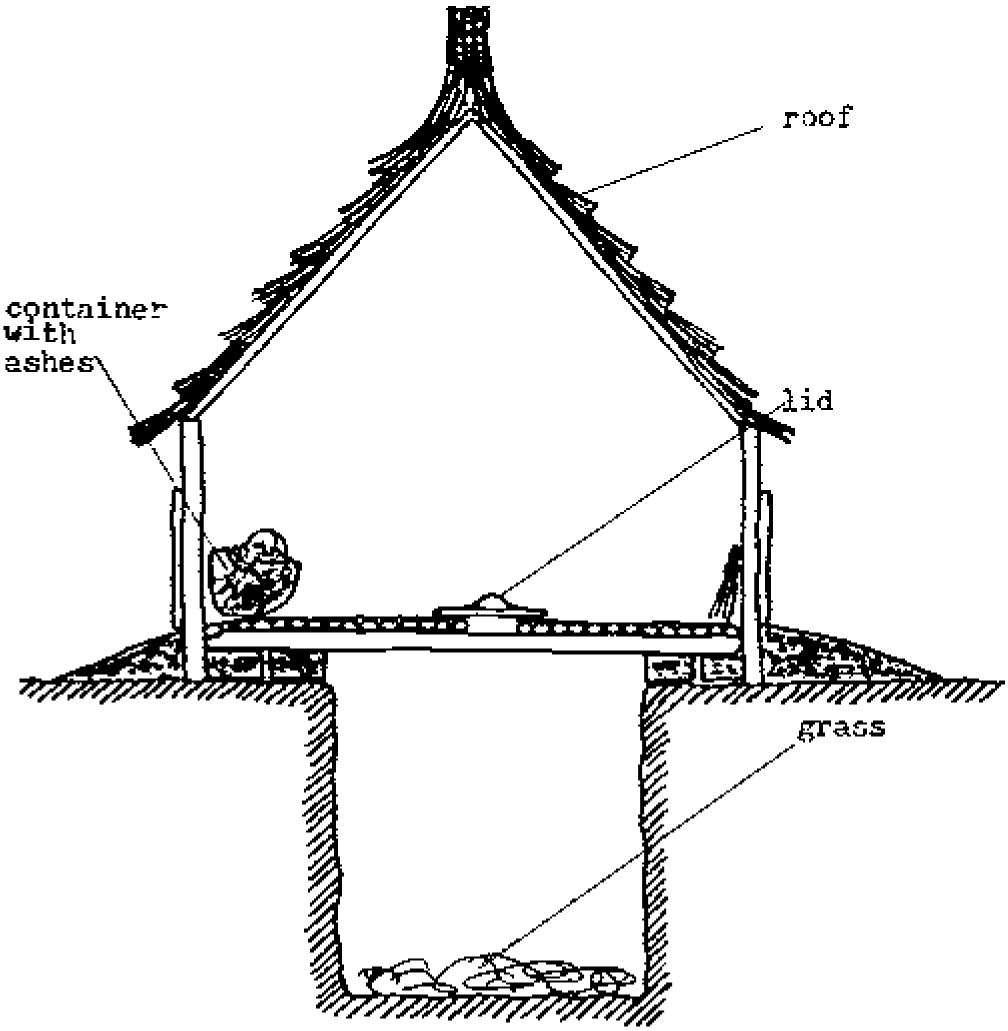

6. Smear the floor. A smeared floor is easier to be kept clean.

7. Build a fitting lid for the squatting hole:

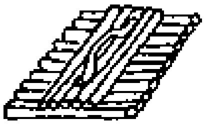

8. Put a container, e.g. a broken clay pot with ashes and sand, a calabash, and a broom into the latrine.

9. Put grass and leaves into the pit before starting to use it.

10. Use the latrine in the way described for compost latrines (see 9.17). Discuss and explain the correct use to the family members repeatedly. Insist on keeping the rules.

11. When the latrine is full, build a new one. Cover the contents of the first with earth. After one year you can dig them out as fertilizer for the garden and you may use the pit again.

12. Build a small children's squatting slab from local material.

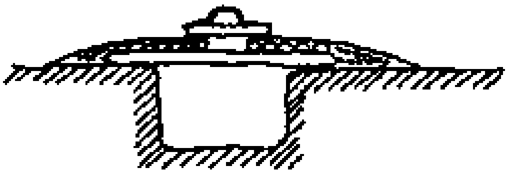

This will help the children to learn how to use a latrine properly. (see 9.19)

Such a latrine will have no bad smell and have few flies and no mosquitoes and will, therefore, be safe if

- the contents of the pit are kept dry;
- the lid is always closed;
- ashes and sand are sprinkled after each use, and grass and leaves regularly added.

How to improve your pit latrine

1. Put a lid, a container with sand and a tin for sprinkling and a broom (not to be used elsewhere) into the latrine!

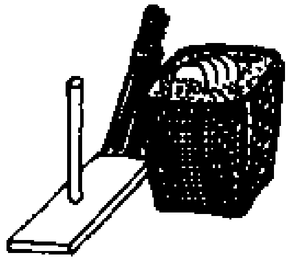

2. Put some sand or ashes into the hole after each use!

3. Close the lid after each use!

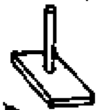

4. If dirty, pour sand over the dirt and sweep it into the hole!

5. Put grass, leaves, sweepings, kitchen left overs into the hole several times a week!

6. Do not pour any water into the hole! Clean the latrine dry or with wet grass, but do not rinse it with water!

7. Do not put glass, tins or plastic into the hole!

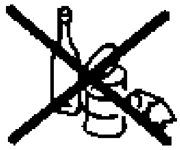

8. Do not use desinfectant, old engine oil or DDT!

Further information:

If there are too many flies or a bad smell, a screened ventpipe can help.
If your pit is full of water and mosquitoes, a compost latrine prevents these disadvantages.
Assistance for building a compost latrine and further information you find at:

1985/MGG

Sudan Council of Churches - Munuki Water and Sanitation Project - Juba, Box 209

Sika ita bamul mustra betak ahsan

1. **K**utu kuta, guffo beta ramla, hilba al ita bekubu al ramla ma huo wa mukshasha fi al mustra! Mukshasha da ma be stamilu fi mahal tani.

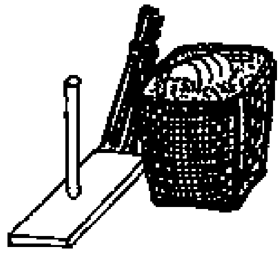

2. **K**utu ramla walla ramat basit fi ufra bad ita stamilu !

3. **G**afulu kuta bad ita stamilu !

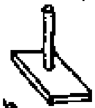

4. **K**an waskan kubu ramla fogu wasaka de wa nadifu jua al ufra !

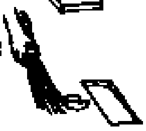

5. **K**utu gesh, warsal, wasaka al nadifu min midan taki wa min madba fi ufra kullu usbu !

6. **Ma ta** kubu moya fi ufra kullu kullu ! Nadifu mustra yabis walla ma gesh al bilu be moya , lakin ma ta kasilu ma moya !

7. **Ma ta** kutu gisasat walla hilbat walla listic walla naylon fi al ufra kullu kullu !

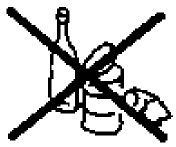

8. **Ma ta** stamil Dettol walla Finik walla zet mahruk walla DDT kullu kullu !

Kabar zeda le de :

Kan fi duban ketir walla riha batal , masura be numulia fi ras beta besadu ita .
Kan mustra taki malyan ma moya wa bauda , bachana min ufraten bewagaf kullu mushakil de.
Musada beta abinu bachana min ufraten zeda ita be ligu fi maktab beta mejles al kanais .

1985/MGG

Sudan Council of Churches - Munuki Water and Sanitation Project - Juba, Box 209

كيف تتحسن البغانك

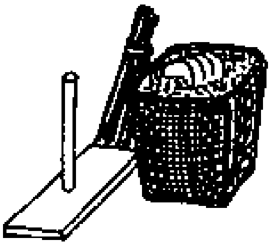

١ وضع غطاء و العلبة مملوة بالرمل و
الثانية صغيرة التى يمكنك أن
ترش بها الرمل على بلاط و الفرشة
النظافة و التى لا تستعمل فى أى
مكان إلا داخل البغانة.

٢ وضع الرمل أو الرماد داخل الحفرة بعد
الاستعمال.

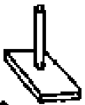

٣ اقفل الحفرة بعد كل إستعمال.

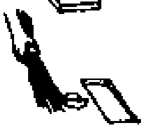

٤ إذا غير منظف دفق الرمل على الأوساخ ثم
نظفها إلى داخل الحفرة.

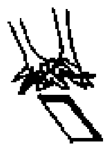

٥ وضع القش، أوراق، أوساخ و البقاية
الاكل فى المطبخ داخل الحفرة مرات عديدة
فى الاسبوع.

7 لا تدفق الماء داخل الحفرة، نظف البغانة
نظيفاً بالقش مبلوه بالماء و لا تدخلها
داخل الماء.

٧ لا توضع الزجاج أو الصفحية المقطع أو
البلاستيك الى داخل الحفرة.

٨ لا تستعمل المبيدات للحشرات أو زيت
الماكنة القديمة أو DDT.

معلومات أخرى

إذا هناك ذباب كثيرة أو الرائح أفن ضع ماسورة
تهوية لكى تساعد. إذا البغانة مملوة بالماء و البعوضة
المرحاض تساعد على ذلك. توجد المساعدة للبناء
المرحاض عند مشروع منوكى للاصحاح و الماء.

مجمع الكنائس فى السودان، مشروع منوكى للإصحاح و الماء، جوبا، ص.ب. ٢٠٩

1985/MGG

Sudan Council of Churches - Munuki Water and Sanitation Project - Juba, Box 209

9.11. Ventilated Improved Pit Latrine (VIP)

The ventilated improved pit latrine (VIP) was designed to reduce smell and fly nuisance. The main difference, compared with a traditional pit latrine, is the ventpipe.

The ventpipe (Ø 8-20 cm) is painted black and placed on the sunny side of the latrine. The air inside the ventpipe will thus heat up and create an updraft to expel bad smells. A corrosion resistant screen on top of the ventpipe prevents the flies from escaping and entering.

Many VIPs have no removable lid on the squatting hole. The interior of the latrine is dark, as the superstructure is constructed in spiral shape. Thus flies do not escape from the squatting hole, but are attracted by the light falling into the pit through the ventpipe. Dark latrines, however, may cause users to leave the latrine slab dirty. Snakes and scorpions also like to hide in the dark. Therefore, it is more advisable to provide a window and a removable lid.

Whether a VIP is safe healthwise depends on correct use and operation and maintenance; it is best managed in the same way as a compost latrine (see 9.17).

Remember:

A badly kept, dirty pit latrine does not differ from defaecation in the open.

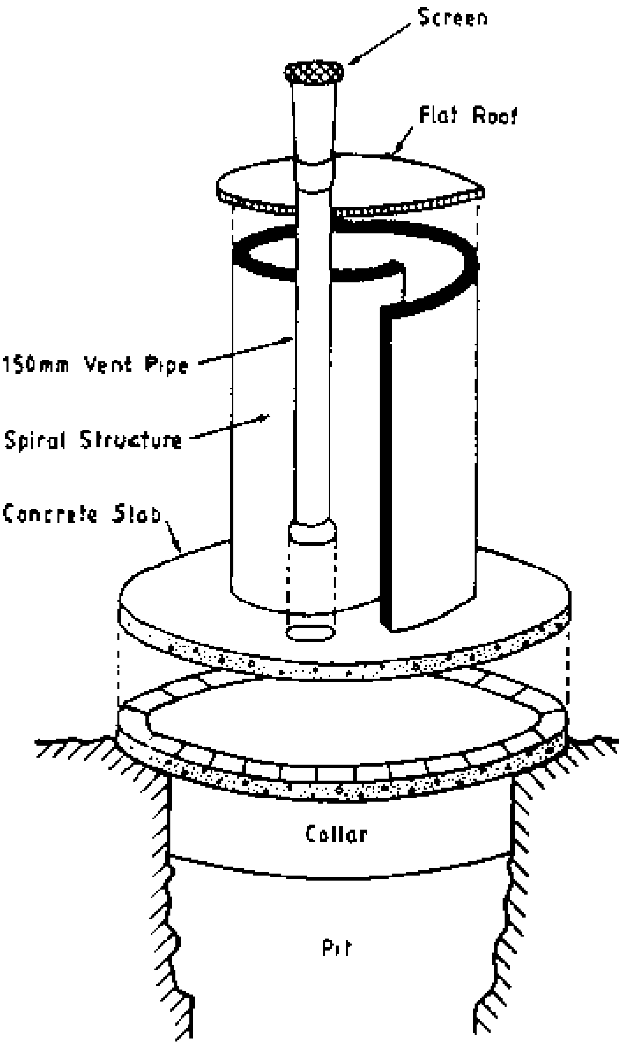

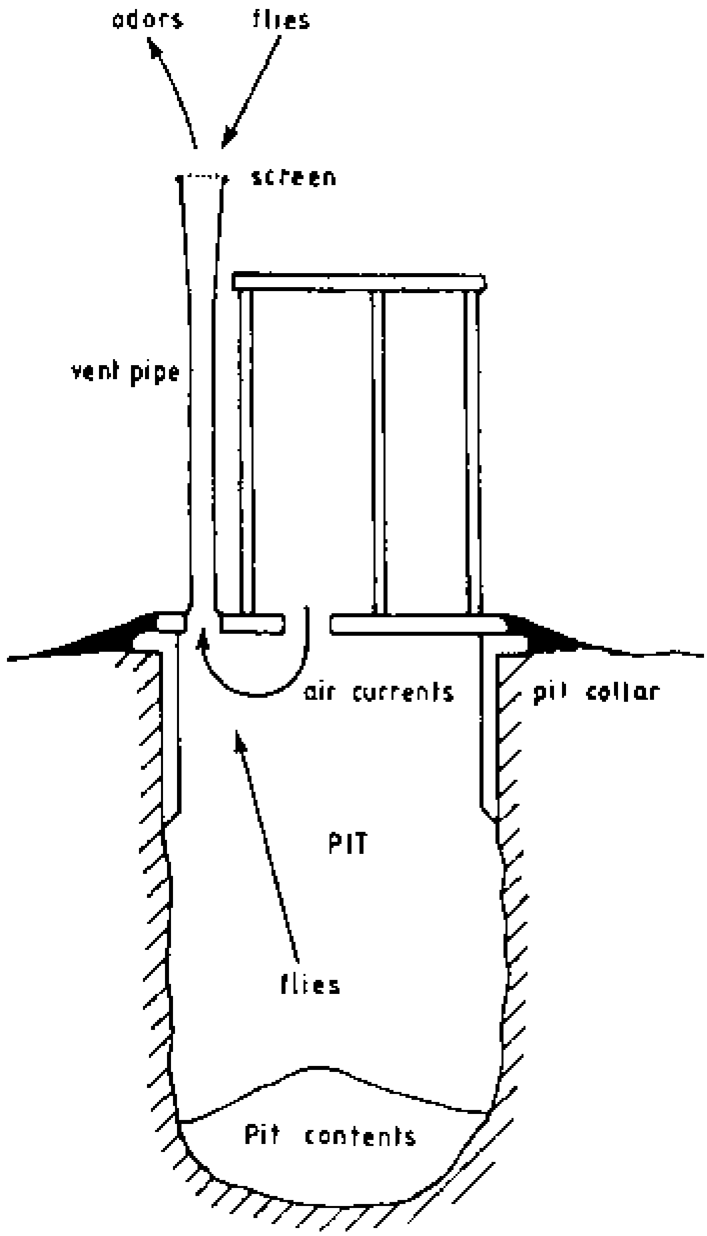

9.12. Compost Latrine

A) Description of a Compost Latrine

A compost latrine consists of a pair of waterproof vaults (= receptacles) that receive excreta, ashes, sawdust, grass, leaves, sand, kitchen residues, etc. Each vault is equipped with a slab with a hole for defaecating, a rear opening for removing the compost, and a hole for the ventpipe.

B) Usage of the Compost Latrine

Only one receptacle is used at a time. The other one is closed by a permanent lid. When almost full, grass and soil are put into it and it is closed. Then the second receptacle is used until almost full.

While the second receptacle is being filled (6 to 12 months), the contents of the first one have time to decompose. Then they are not dangerous anymore for transmitting diseases. When the second is almost full, the first one is emptied and used again. Thus the two receptacles are used alternatively.

C) Special Features of a Compost Latrine

- The compost latrine works as a part of the life cycle, recycling human excreta as a resource, usable as fertilizer.

- If well kept, the compost latrine prevents spreading of diseases.

- There is no groundwater pollution.

- Deep digging is not necessary; the compost latrine can be built above ground.

- The pit cannot collapse.

- Only composted, dry matter needs to be handled.

- The compost latrine is never finally full, but can be re-used again and again.

- The costs are reasonable.

D) Possible Problem Areas of Compost Latrines

Compost latrines must be used in the correct way (as any other latrines). However, if not used correctly, the contents may not decompose in time, and they will be very unpleasant to empty (like those of a septic tank). Compost latrines need a high degree of care and attention from each user. Intensive and repeated health education is needed for promoting compost latrines.

E) Types of Compost Latrines

There are different types and ways of constructing a compost latrine:

1. Double Vault Compost Latrine below Ground

This compost latrine is built from cement blocks. Basically the same type, but larger and built from bricks, is described in detail in 9.14.

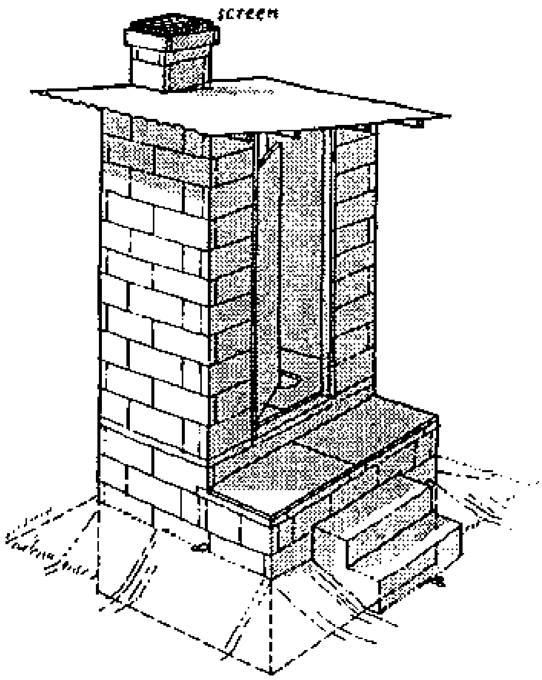

2. Double Vault Compost Latrine above Ground

LAYOUT PLAN

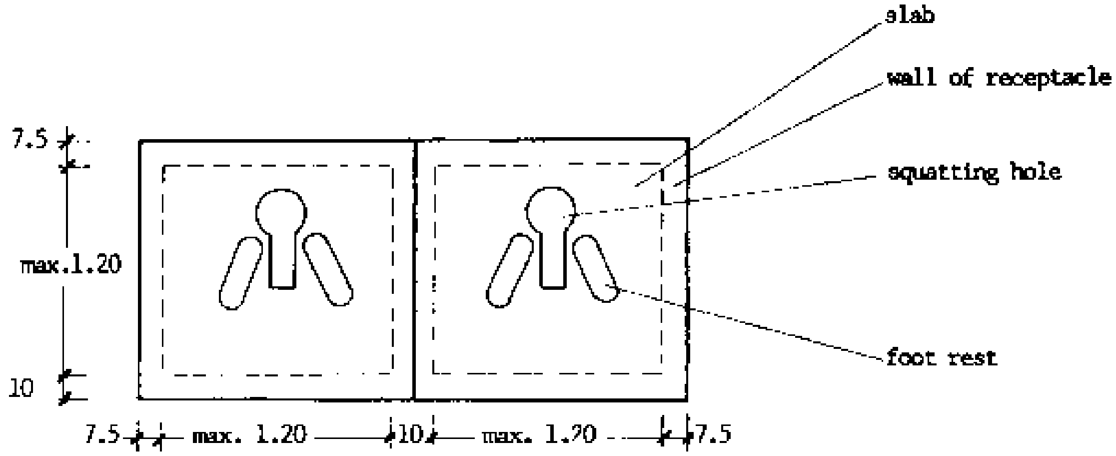

BACK-VIEW

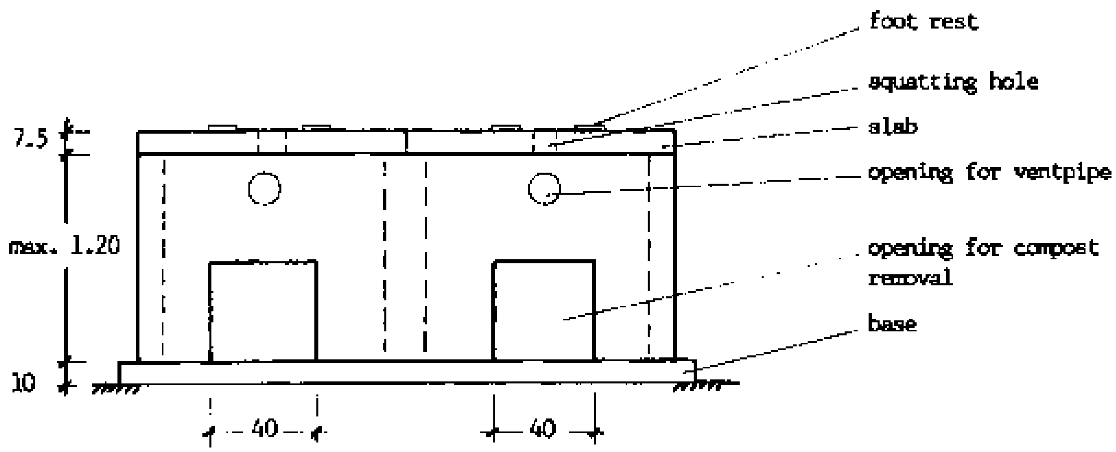

SIDE-VIEW

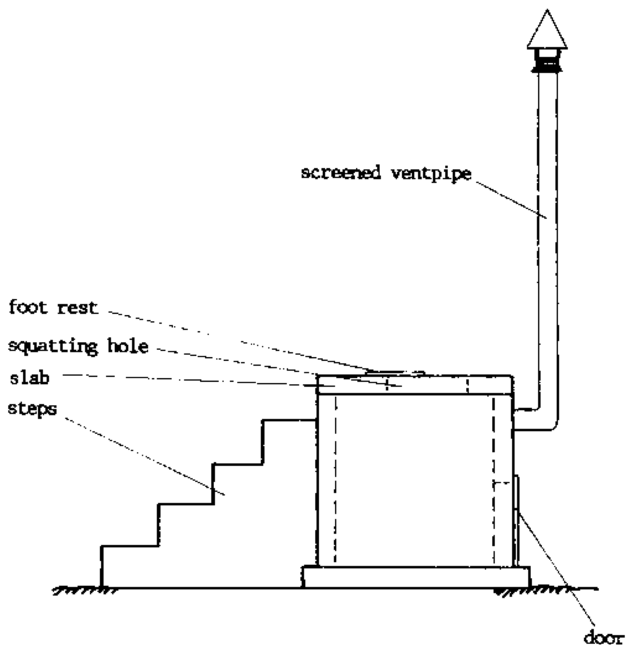

3. Double Vault Compost Latrine above Ground with Separation of Urine (Vietnamese Compost Latrine)

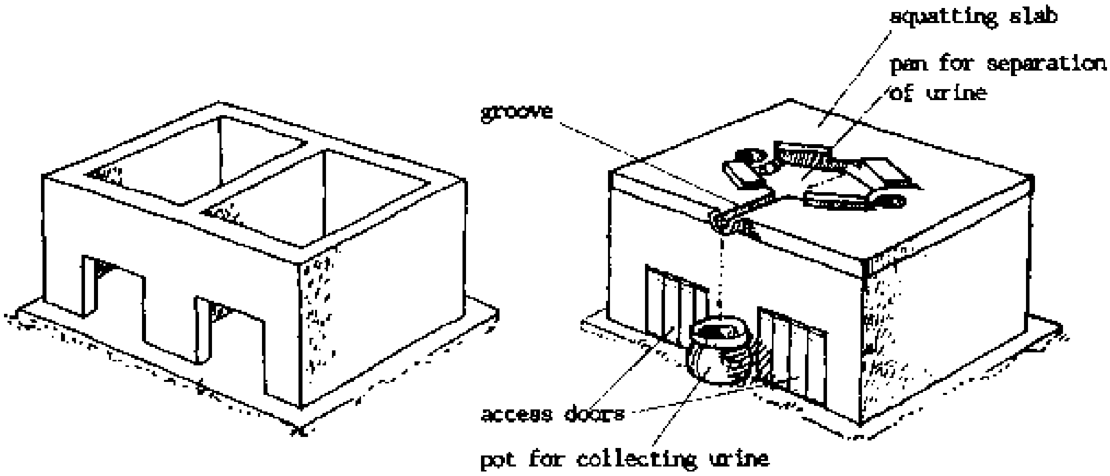

4. Compost Latrine from Local Materials

When the pit is full, a new pit is dug and the slab and superstructure moved on top of it. Six months later the decomposed contents of the first are removed.

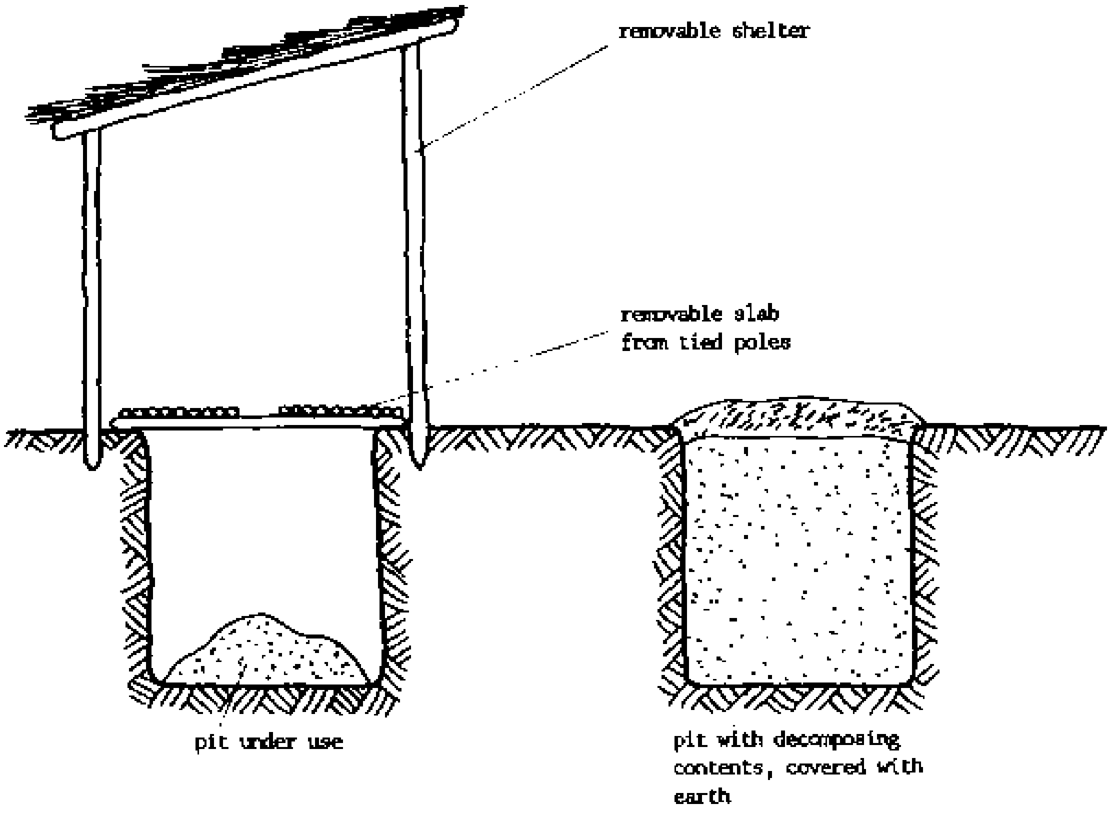

F) Example for Advertising Leaflet about Compost Latrines

Sudan Council of Churches * Munuki Water and Sanitation Project

DO YOU WANT TO DO SOMETHING FOR YOUR HEALTH AND THE HEALTH OF YOUR FAMILY???

WHY NOT BUILD A LATRINE?

YOU THINK THERE ARE PROBLEMS?

- The underground is rocky and it will be hard work and expensive to dig.

- Or the water is near and the latrine may be flooded and become a breeding place for flies and mosquitoes.

- Or building materials have become too expensive.

THE COMPOST LATRINE WILL SOLVE YOUR PROBLEMS!!!

- Only one metre deep to dig - the best for rocky ground.

- Completely closed compartments - the best if the water table is near; no flooding anymore.

- Never troubles as with a WC if the water supply is cut - you do not depend on a water supply.

- To be used for generations and it will never fill up finally - once you invest, always you enjoy.

- The waste is turned into manure in a safe way - you can even use it in your garden.

- Cash contribution only £S 250.000 m/ms for the standard version.

For further information contact:

Sudan Council of Churches
Munuki Water and Sanitation Project
P.O. Box 209, Juba

Office Hours:
Monday to Friday, 7.30 a.m. to 2.30 p.m.

YOU ARE WELCOME ANY TIME!

9.13. Composting Process

Composting takes place in the compost heap in the garden or in a compost latrine. It is important to understand the process for being able to maintain a compost latrine properly.

Composting is a biological process. Various types of organisms break down organic substances to make humus (= mature compost). This needs to happen under controlled conditions. Otherwise, decomposition will not take place fully, leaving a foul, smelly mass with pathogenic (= sickness carrying) organisms behind.

The following factors influence decomposition:

A) Availability of Air (Aeration)

Some microbes need oxygen to carry on decomposition (= aerobic decomposition). Others do not require oxygen (= anaerobic decomposition). Both types are going on in a compost heap.

Conditions with enough air available (= aerobic conditions) are necessary for rapid and smell-free decomposition and for destruction of pathogenic organisms by heat.

Air is provided on the surface and by earthworms, maggots, beetles, cockroaches, and others digging into the heap. Obviously, in flooded pits with too much moisture, the material becomes soggy, compact and unable to contain sufficient air in between the particles.

B) Temperature

Dry decomposition produces a lot of heat. In the middle of a compost heap it can reach 50°C. High temperatures contribute to the destruction of pathogenic organisms.

C) Moisture

The best moisture content in a compost heap is 50-60%. Too much or not enough moisture are both bad for the composting process. An extremely wet latrine is bad for composting and invites mosquito breeding. It can be caused by

- humid climate,
- water used for anal cleaning,
- urine and faeces deposited,
- too many users,
- no addition of organic refuse,
- no addition of sand, ashes or other dry matter,
- an unventilated receptacle,
- entry of rain water, surface water or groundwater.

Take care that the compost is not too wet and muddy by regularly adding enough dry material.

If it is wet, check the cause and remove it.

D) Ratio of Carbon and Nitrogen

Carbon and nitrogen are two different chemical substances found in nature.

Microbes feed on organic matter containing, amongst other things, carbon and nitrogen; they use carbon for energy and nitrogen for body building. The carbon and nitrogen content must be balanced in a compost heap. It is best if there is 15 times more carbon in the compost than nitrogen (Carbon/Nitrogen ratio = C/N ratio = 15/1).

Faeces have only 8 times more carbon than nitrogen (C/N ratio = 8/1); urine has even less carbon than nitrogen (C/N ration = 0.8/1). Therefore, it is very important to add carbon-rich material in order to reach the correct balance.

Carbon rich materials are all organic materials (such as grown plants) especially:

- ashes	Almost all carbon
- sawdust	C/N ratio = 500/1
- straw	C/N ratio = 150/1
- green leaves, grass, kitchen residues	C/N ratio = 15/1

Therefore:

Regularly pour ashes, leaves, grass, sawdust, etc. into the compost pit in big quantities. Put all kitchen residues into the pit.

Do not worry about the pit being filled too quickly. The volume of all these materials is very much reduced during decomposition.

E) Life in the Compost Heap

A variety of organisms live in a compost pit, like viruses, bacteria, fungi, algae, earthworms, fly maggots, snails, ants, spiders, beetles, cockroaches, mice, etc. They play a major role in mixing, airing, and tearing apart the contents of the latrine. As long as they remain inside the receptacle, their activities are good and should be encouraged. They should not be killed by chemicals or poisons or disinfectants poured in. But we do not like to see such organisms outside the receptacle.

Therefore:

- Always keep the lid closed.

- Check the screens on the ventpipe for eventual holes and repair.

- Keep the covers for emptying well covered with earth.

- Sprinkle ashes and sand after each use to reduce flies.

- Do not throw tins, glass, plastic into the receptacle.

- Do not pour DDT, old engine oil or disinfectant (Dettol, Finik) into the pit (see also 8.7/4).

F) Destruction of Pathogenic Organisms

Pathogenic organisms are destroyed by

- high temperatures,
- time,
- unfavourable pH value (alkalinity or acidity),
- competition for food,
- antibiotic action,
- toxic by-products of decomposing organisms,
- anaerobic conditions.

After six months in a closed receptacle, the contents of a well-functioning compost latrine are safe enough to be taken out.

Take them out and cover them with soil. Most parasitic organisms have been destroyed.

The period of one year in a closed receptacle is on the safe side. All pathogenic organisms are destroyed.

However, if the compost latrine was not well kept, or no organic material was added, or the contents are muddy, it will be unpleasant to remove the contents. Dispose of them in a trench and cover them immediately with earth. Learn from experience and keep the latrine better next time.

G) Compost as Fertilizer

Addition of compost will make the soil more fertile, easier to cultivate, and improve its water holding capacity. The fertilizer from compost is well balanced in all its ingredients. Plants can use it almost 100%. Compost does not endanger the groundwater as chemical fertilizers do. Compost is a treasurable resource.

9.14. Compost Latrine Construction

Three different designs for compost latrines are described here:

1. Compost latrine, standard size (15 - 25 people), from permanent materials;
2. Compost latrine, standard size (15 - 25 people), with local superstructure;

3. Double compost latrine, large size (100 - 120 people), from permanent materials;

The construction steps and the materials needed are given for the first design only. However, they are similar for the other designs.

A) Designs

1. Compost Latrine from Permanent Materials

The compost latrine, standard size, is intended for extended families. The volume of the two pits together is about $2.7m^3$; this is equal to the volume of an ordinary round pit Ø 1.00 m, 3.50 m deep. It is built from half-brick wall throughout. Additional reinforcement in the slabs makes it unnecessary to have a beam to bridge the pits.

Prefabricated Parts:

Quant.	Item	Measurements	Remarks
2	concrete slabs with squatting hole and foot marks	95 cm × 110 cm × 5 cm	reinforcement: welded mesh and 1 Ø 10 mm
2	concrete covers	50 cm × 110 cm × 5 cm	reinforcement: welded mesh; two handles
1	lid from cement mortar 1:4	53 cm × 20 cm × 5 cm	see 9.14/19
1	wooden lid with handle	53 cm × 20 cm × 2 cm	see 9.14A9
1	ventpipe from ferrocement	inside Ø 20 cm, outside Ø 25 cm, length 2.70 m	reinforcement: chicken wire with screen and rain-cover

LAYOUT PLAN A-A PITS

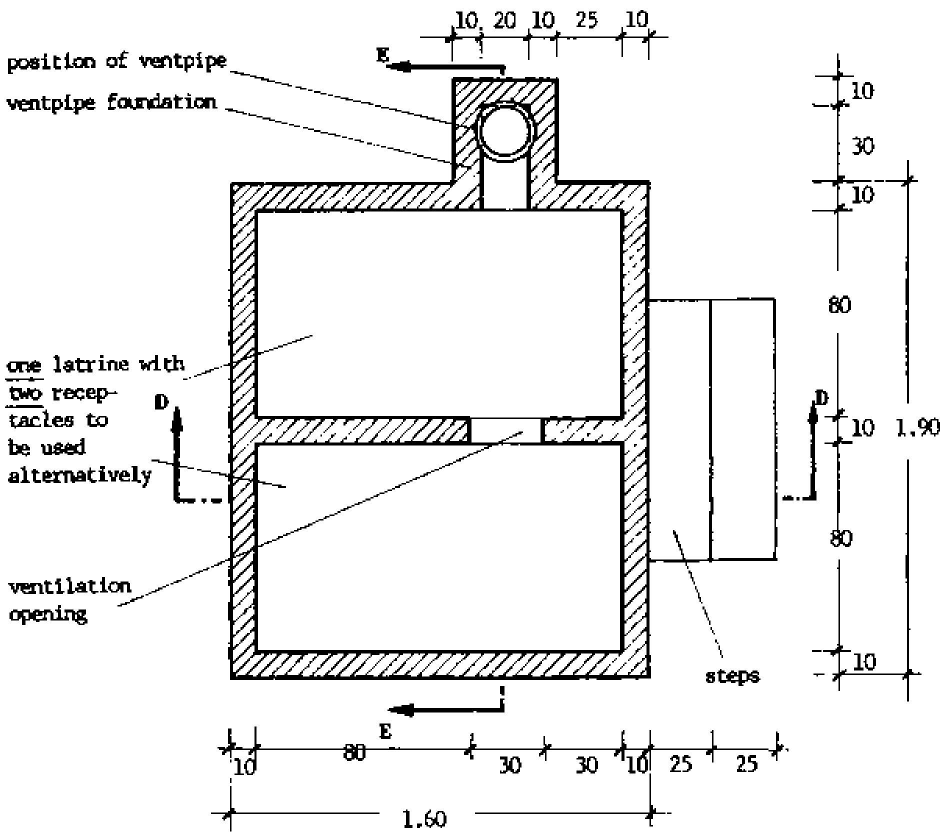

SCALE 1:25

How to read technical drawings is explained in 6.1.

LAYOUT PLAN B-B SUPERSTRUCTURE

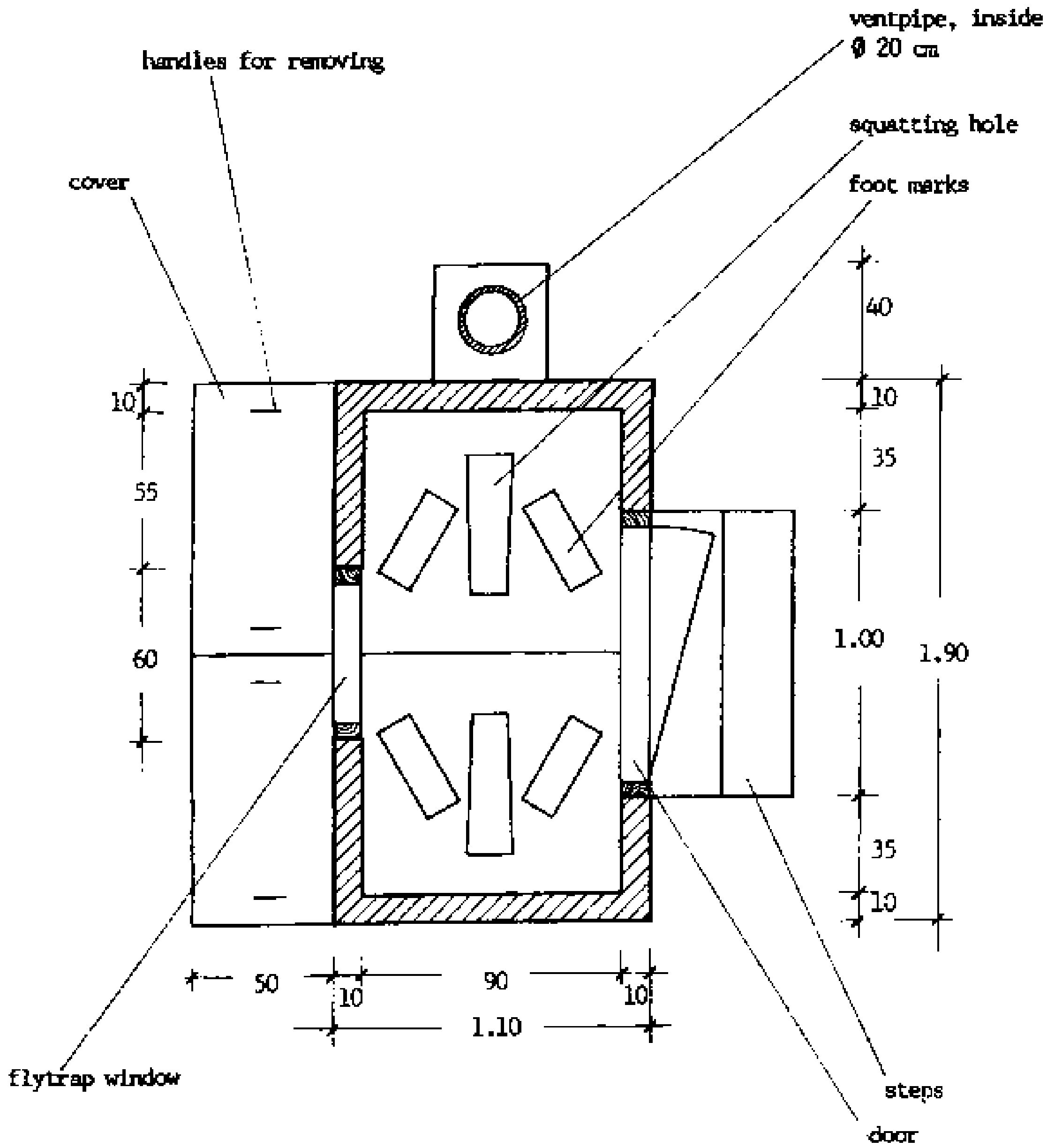

SCALE 1:25

LAYOUT PLAN C-C: SLABS AND COVERS

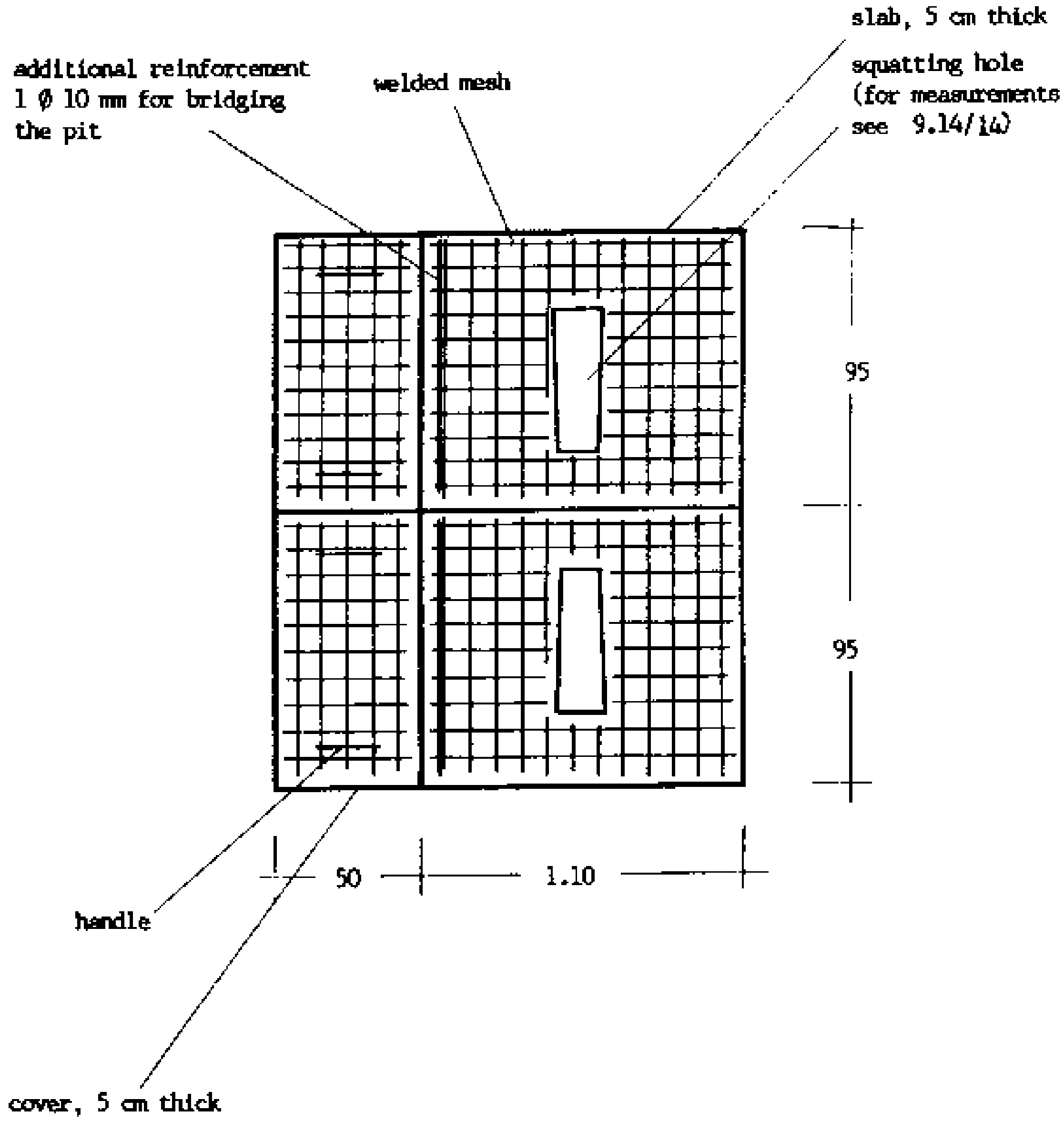

SCALE 1:25

CROSS-SECTION D-D: ACROSS THE BUILDING

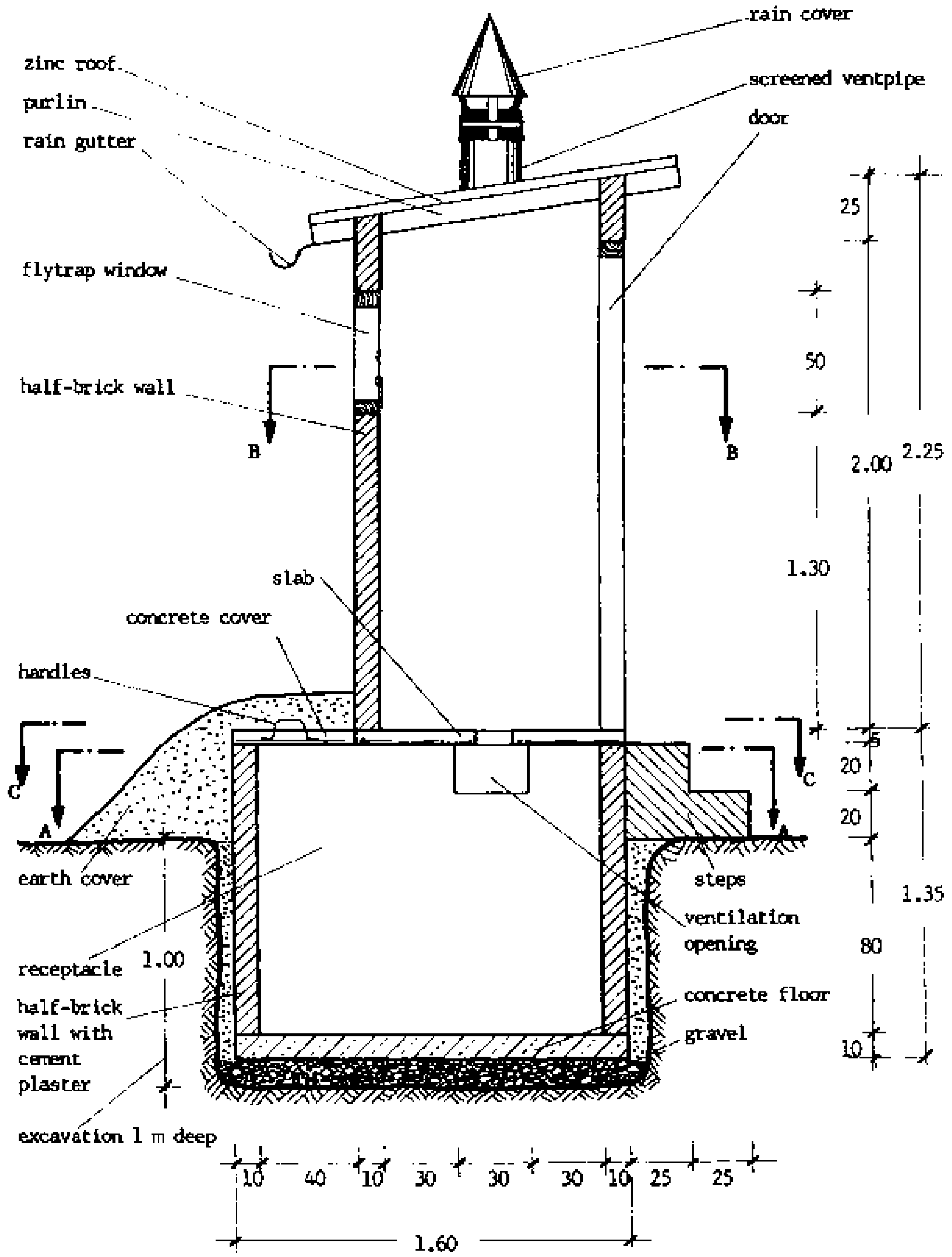

SCALE 1:25

CROSS-SECTION E-E: ALONG THE BUILDING

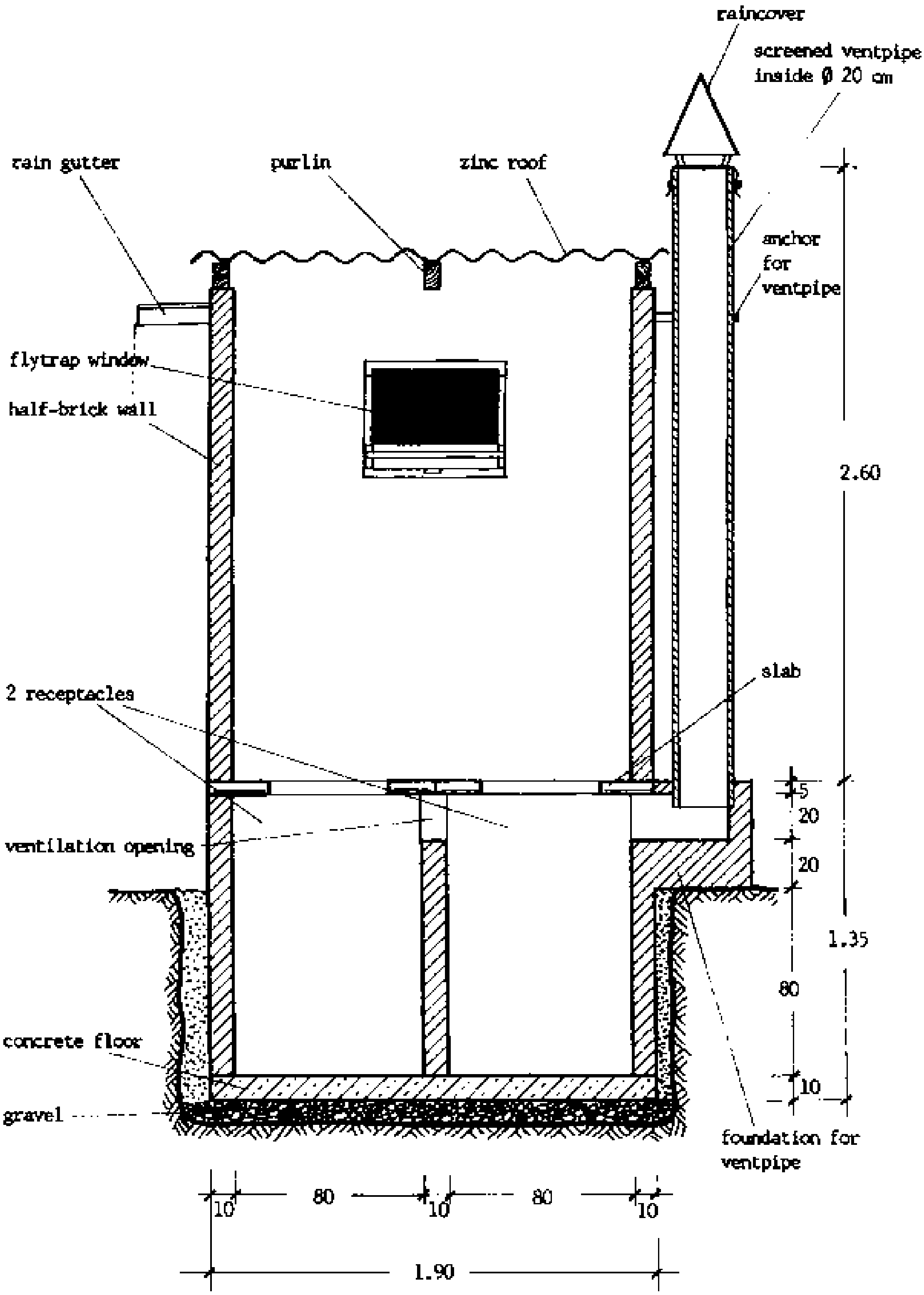

SCALE 1:25

2. Compost Latrine with Local Superstructure

The pit including the slabs is exactly the same as for the compost latrine from permanent materials.

CROSS SECTION A-A

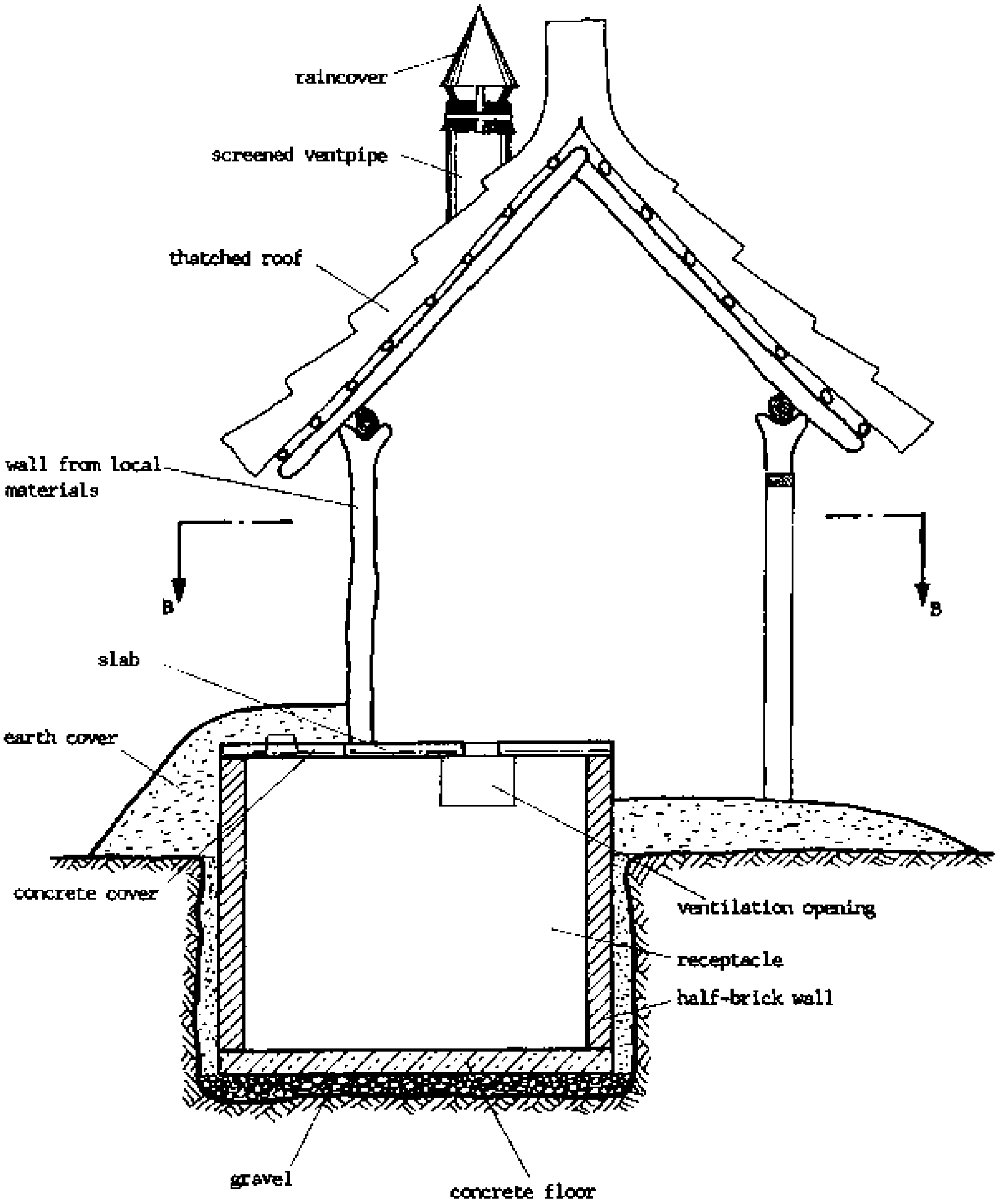

LAYOUT PLAN B-B

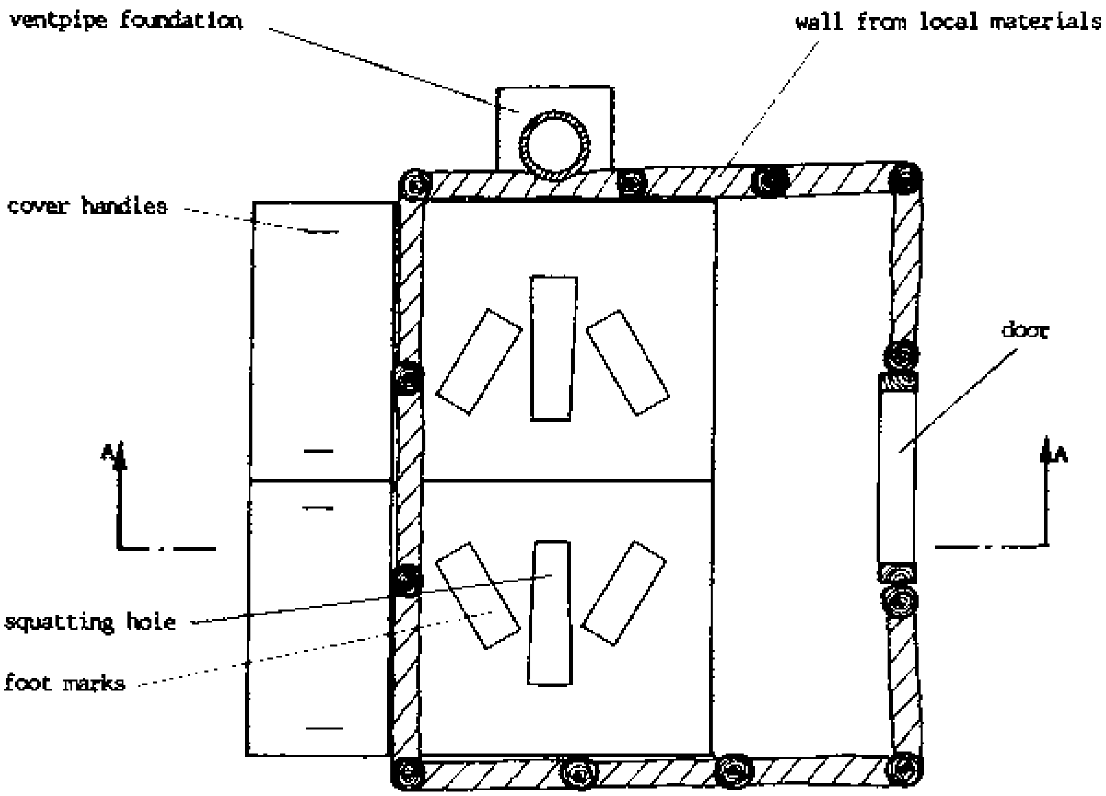

SCALE 1:25

3. Double Compost Latrine for Institutions (Schools, Offices, Clinics, etc.)

The volume of the two pits is 5.1 m^3, the volume of all the four together is 10.2 m^3. All walls are one brick walls (alternatively, the superstructure can be built as half-brick wall). A reinforced concrete beam spans the pit. For more users a triple compost latrine can be built.

Prefabricated Parts

Quant.	Item	Measurements	Remarks
2	concrete beams	15 cm × 20 cm × 2.50 m	reinforcement 2 Ø 10 mm
4	concrete slabs with squatting hole and foot marks	170 cm × 125 cm × 5 cm	reinforcement: welded mesh
4	concrete covers	85 cm × 125 cm × 5 cm	reinforcement: welded mesh; with two handles
2	lids from cement mortar 1:4	53 cm × 20 cm × 5 cm	see 9.14/19
2	wooden lids with handle	53 cm × 20 cm × 2 cm	see 9.14/19
2	ventpipes from ferrocement	inside Ø 20 cm, outside Ø 25 cm, length 2.70 m	reinforcement: chicken wire with screen and rain-cover

LAYOUT PLAN A-A: PITS

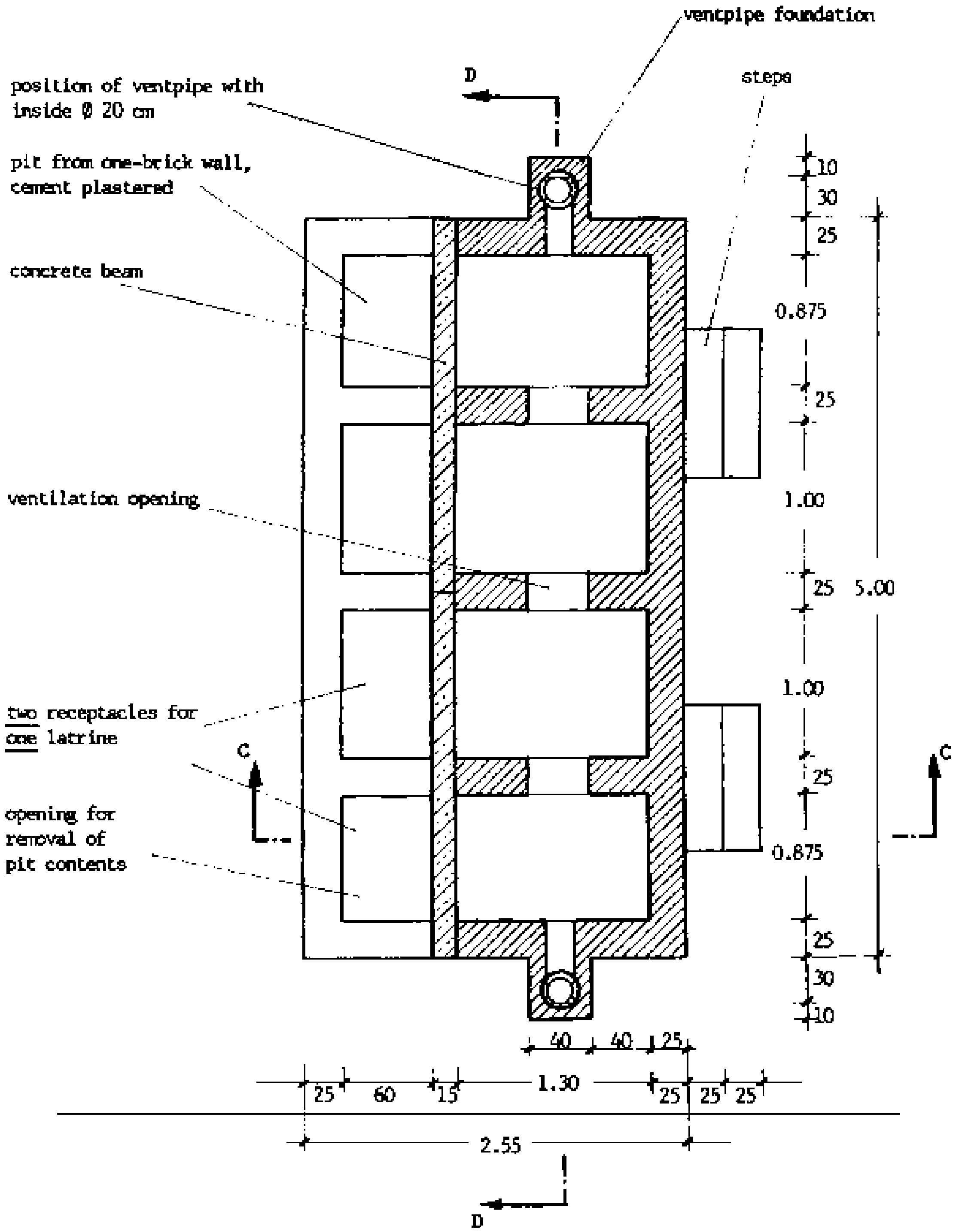

SCALE 1:40

LAYOUT PLAN B-B: SUPERSTRUCTURE

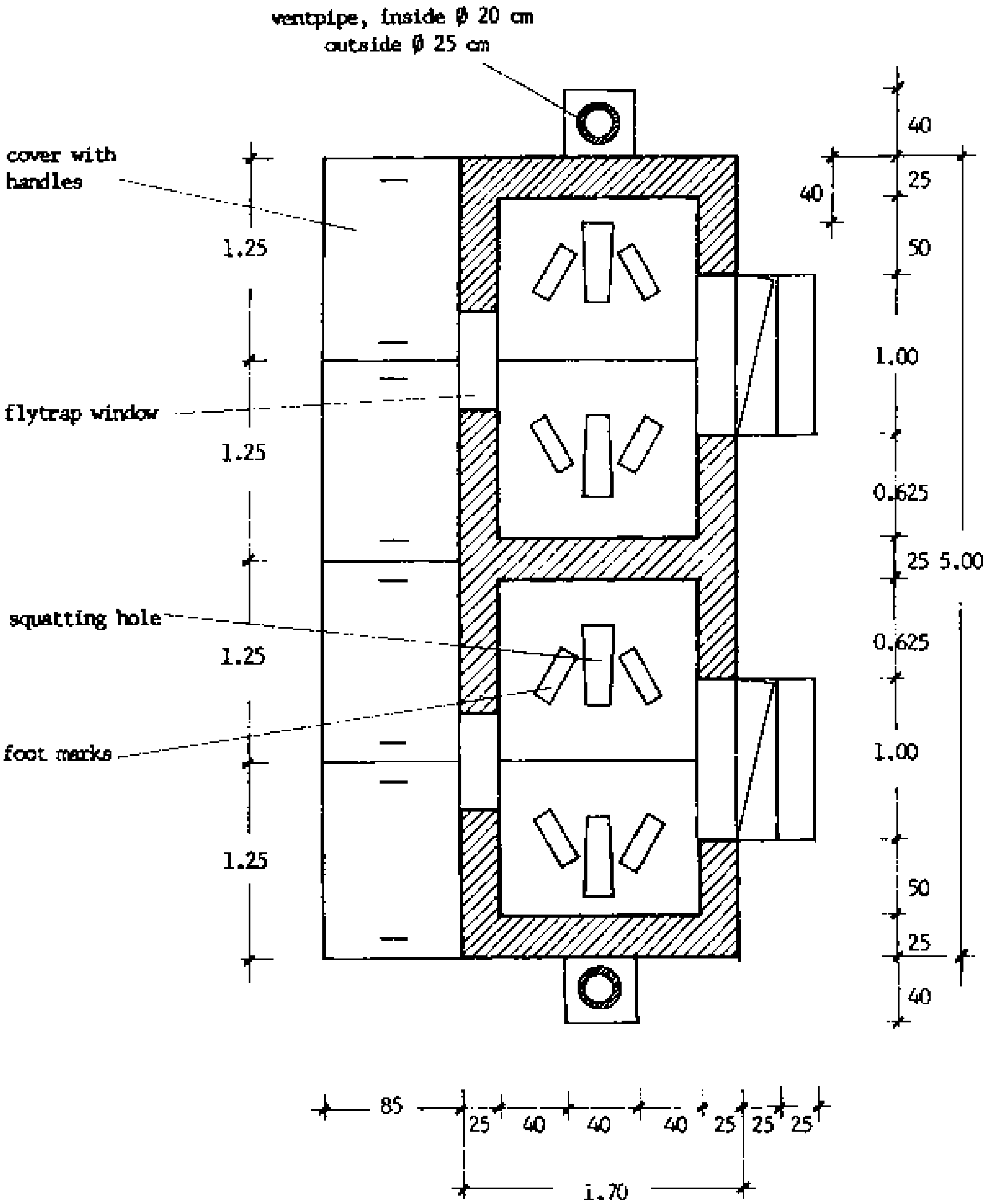

SCALE 1:40

CROSS SECTION C-C: ACROSS THE BUILDING

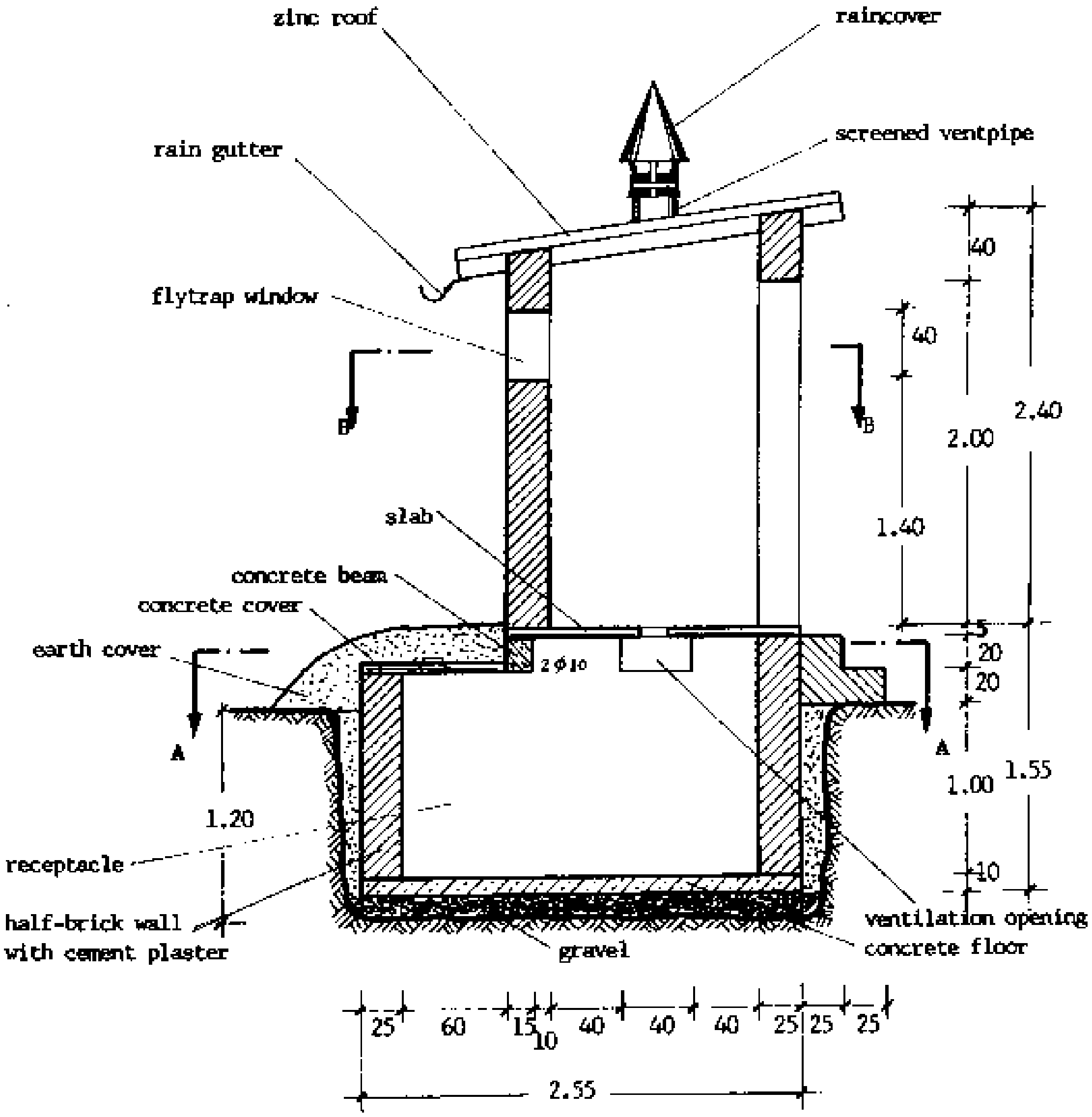

SCALE 1:40

CROSS-SECTION D-D: ALONG THE BUILDING

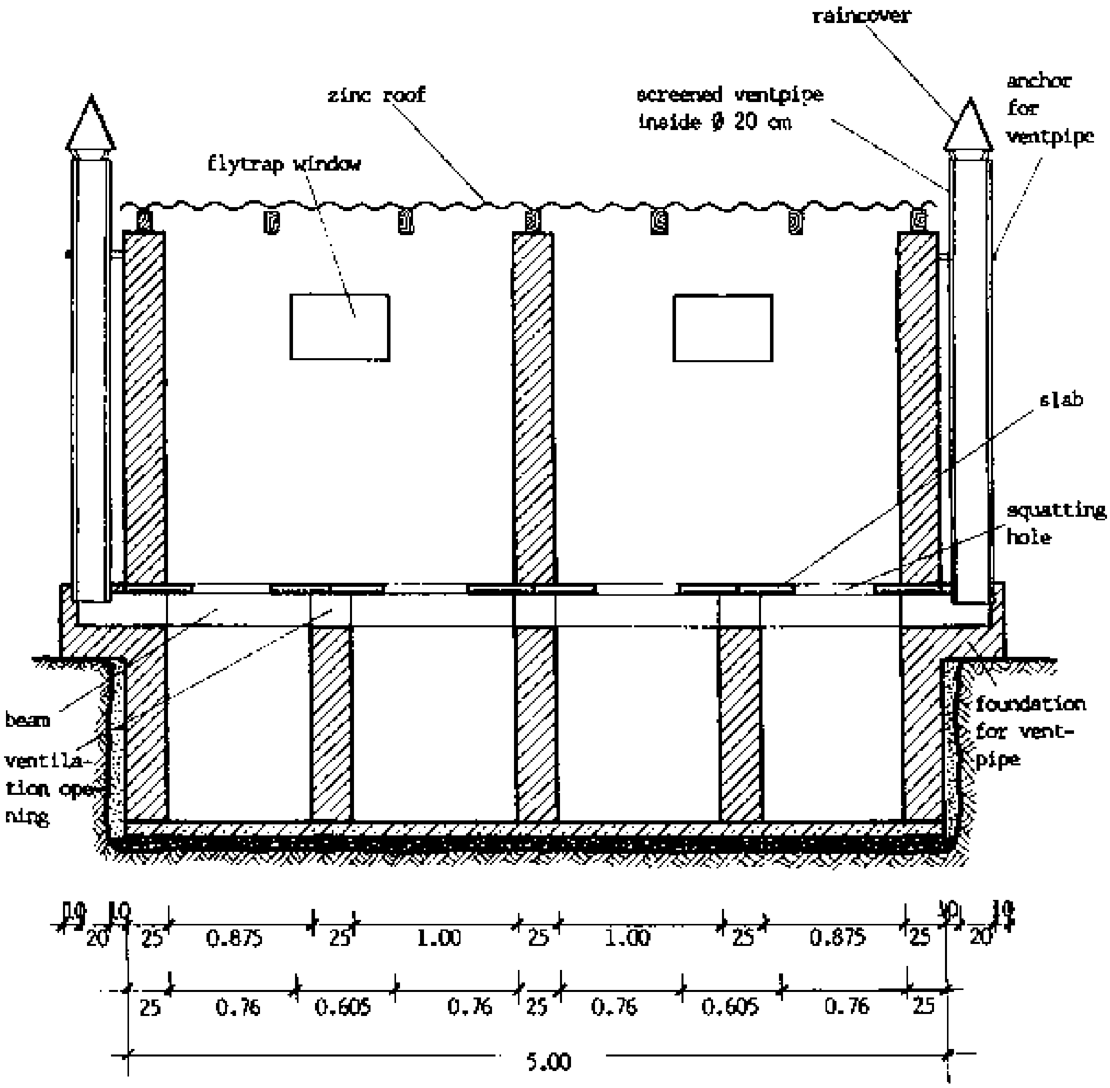

SCALE 1:40

B) <u>Step-by-step Procedures for Construction of a Compost Latrine, Standard Size</u>

1. <u>Pit</u>

Dig a pit 2.00 m broad, 2.30 m wide, and 1.00 m deep, with straight walls (see 6.2, Marking Rectangular Layout Plan)

Pit 2.00 × 2.30 × 1.00

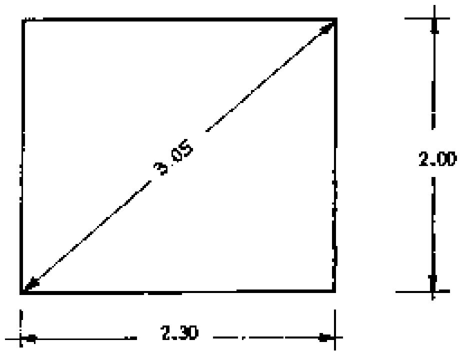

2. Slabs and Covers

- Prepare two sets of wooden frames from timber 2"×4" which can be used for manufacturing many slabs and covers (for measurements see 9.14/15).

EXPLODED DIAGRAM

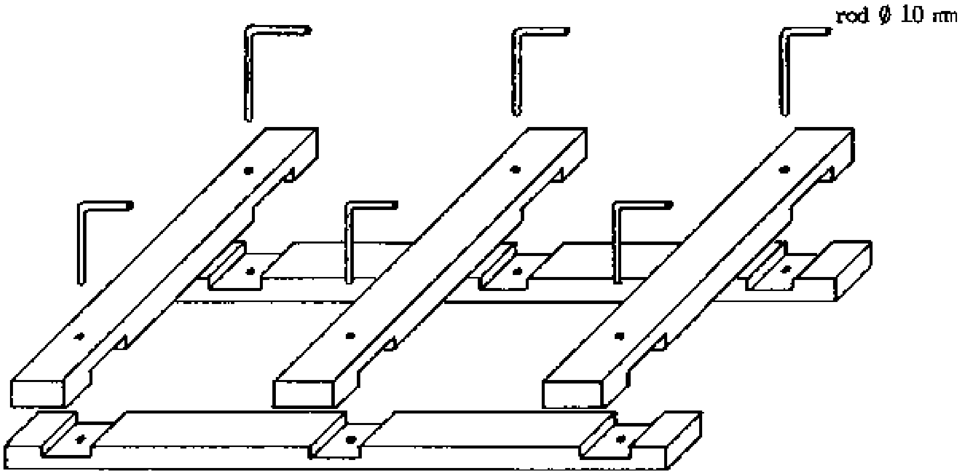

- Prepare a form for the squatting hole and the foot marks. It can be used for manufacturing many slabs. Cut it from plywood, and cut out the places for the squatting hole and the foot marks.

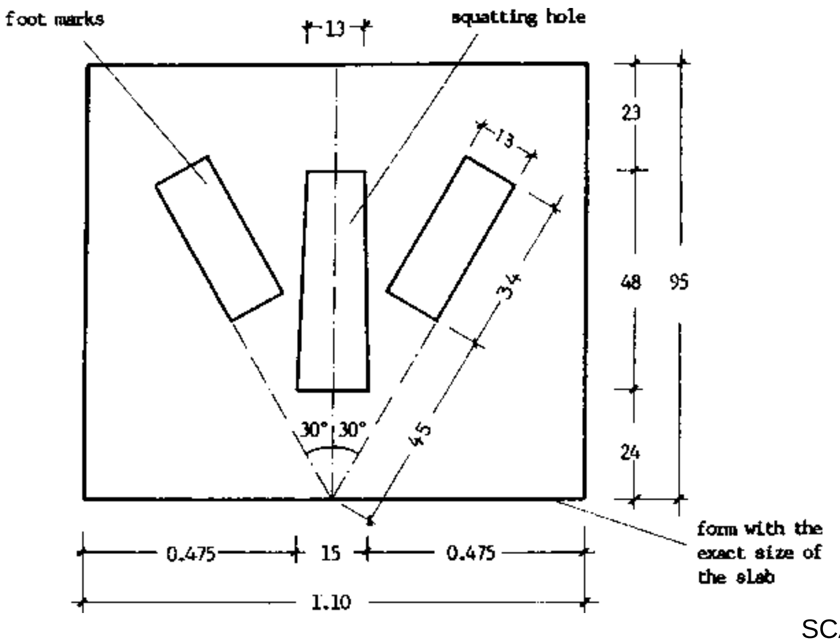

SCALE 1:12.5

- Reinforce all edges with timber 1" × 1" like this:

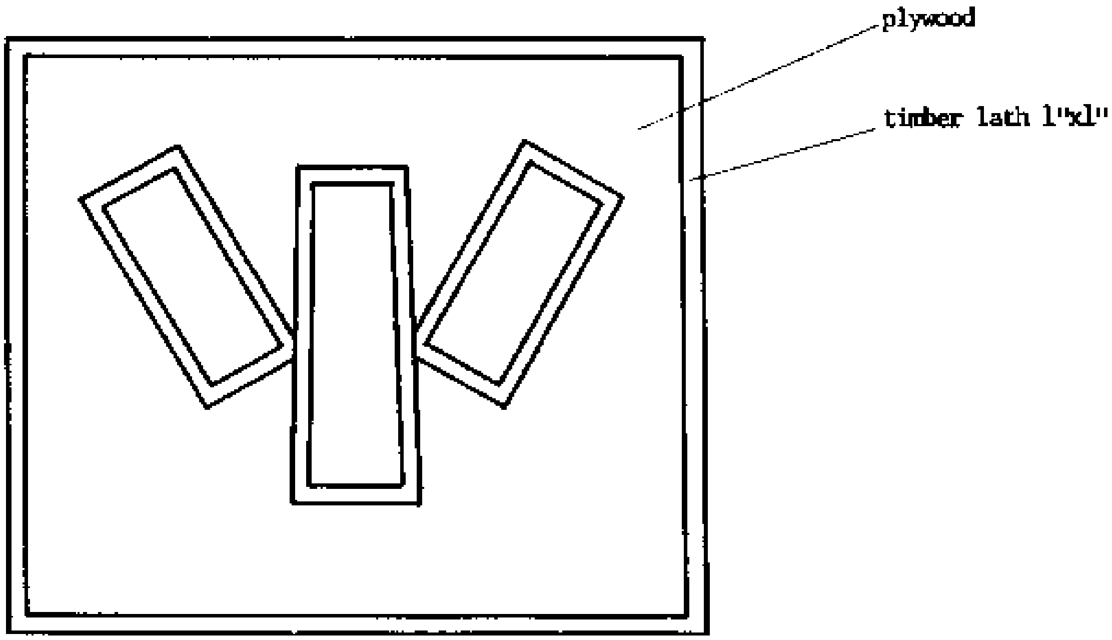

SCALE 1:12.5

- Prepare a wooden plug for casting the squatting hole which can be used many times. It needs to fit easily into the form for the squatting hole

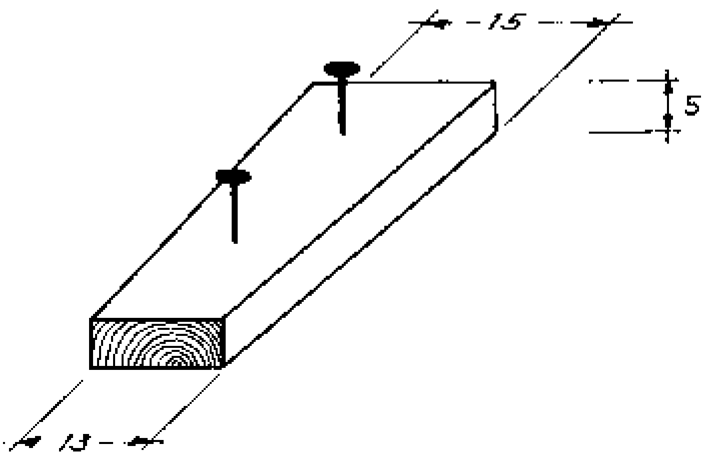

- Put wet sand on level ground, and level its surface with a straight edge.

- Paint the frame inside with old engine oil.

- Place the frame on the sand. Check the measurements <u>inside</u> and, especially, if both diagonals are equal. Slabs which are not rectangular cause a lot of troubles when placed on the pits later.

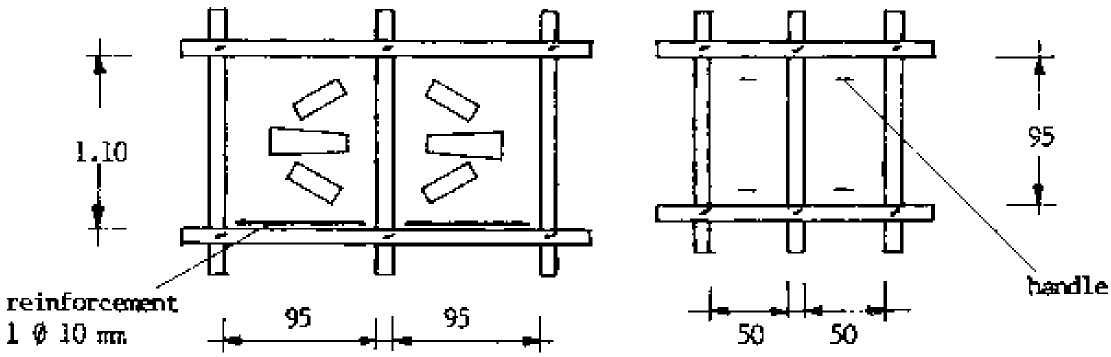

SCALE 1:50

- Place the plug for the squatting hole (see drawing above).

- Cut welded mesh in the size of slabs and covers. Cut out the places for the squatting holes. Cut reinforcement Ø 10 mm for the beam. Cut handles for the covers from reinforcement Ø 6 mm.

- Mix the concrete (mixtures see C).

- Pour concrete 1 cm thick into the frames and compact it well.

- Place the welded mesh, reinforcement Ø 10 mm and handles on top of the concrete (location see above drawing).

- The position of the reinforcement should be like this:

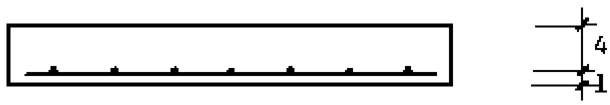

- Pour the rest of the concrete and compact it well.

- Make the top of slabs and covers straight with a straight edge. Make a concrete finish.

- Remove the plug from the squatting hole and apply a finish inside the hole.

- Mark on the slab where you have placed the additional reinforcement Ø 10 mm.

- After an hour, cover the slabs and covers with wet sand and a nylon sheet.

- The frames can be removed after 6 hours.

- Keep slabs and covers wet for five days.

- Do not move or lift them before a week.

Slabs and covers can be either manufactured on site or centrally in a workshop. The latter is more economical if many latrines are to be built.

3. Floor

- Put some gravel into the pit and level it.
- Cast a concrete floor 10 cm thick and compact it well.
- Level the top. A concrete finish is not necessary.

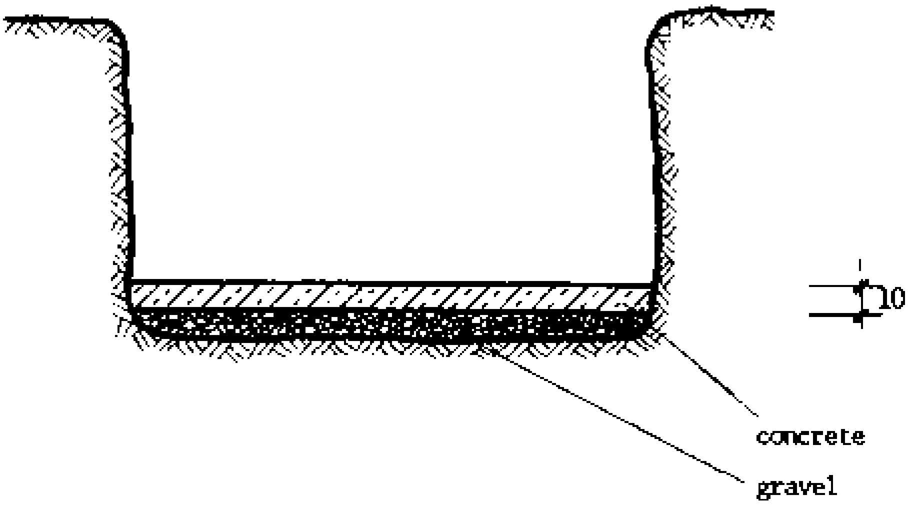

4. Brick Walls

- Mark the layout plan of the pit (outside edge) on the concrete floor (see 6.2, Marking Rectangular Layout Plan).

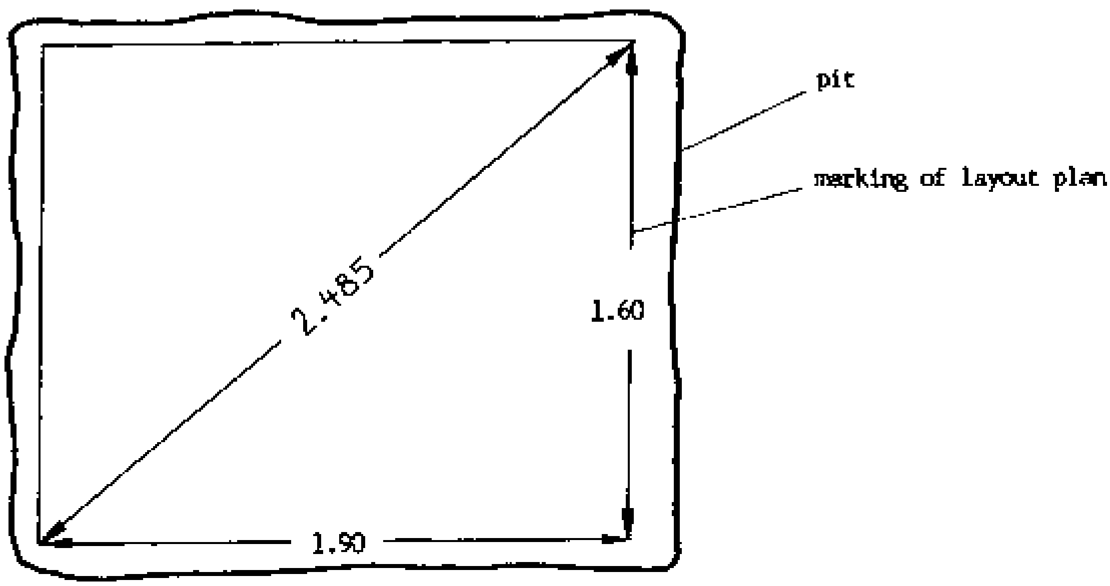

SCALE 1:25

- Span a building line. Check all sides and diagonals.

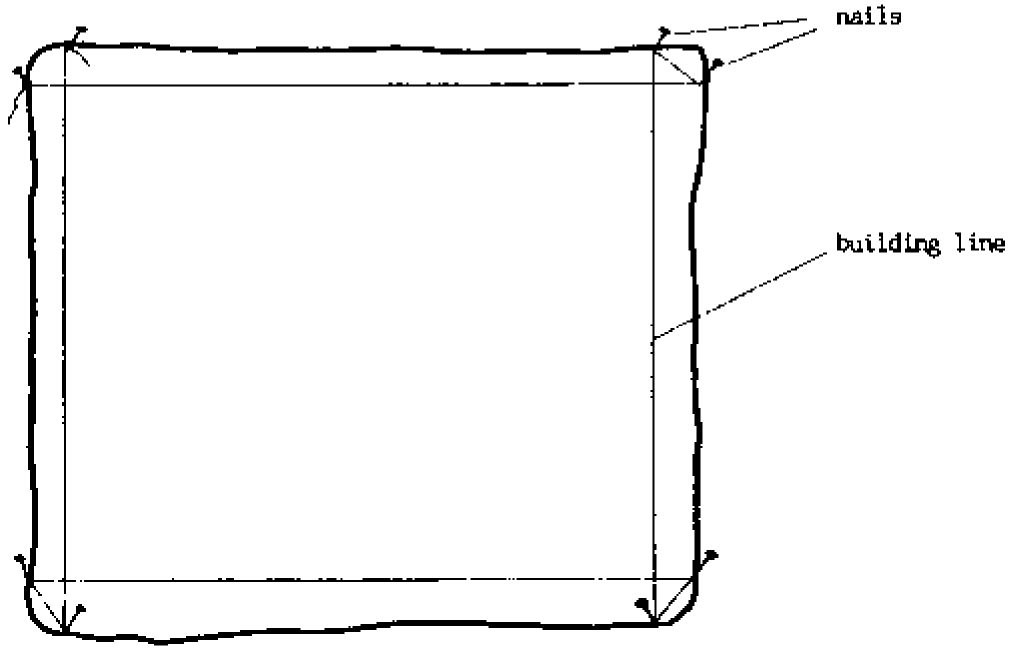

- Build the first course.

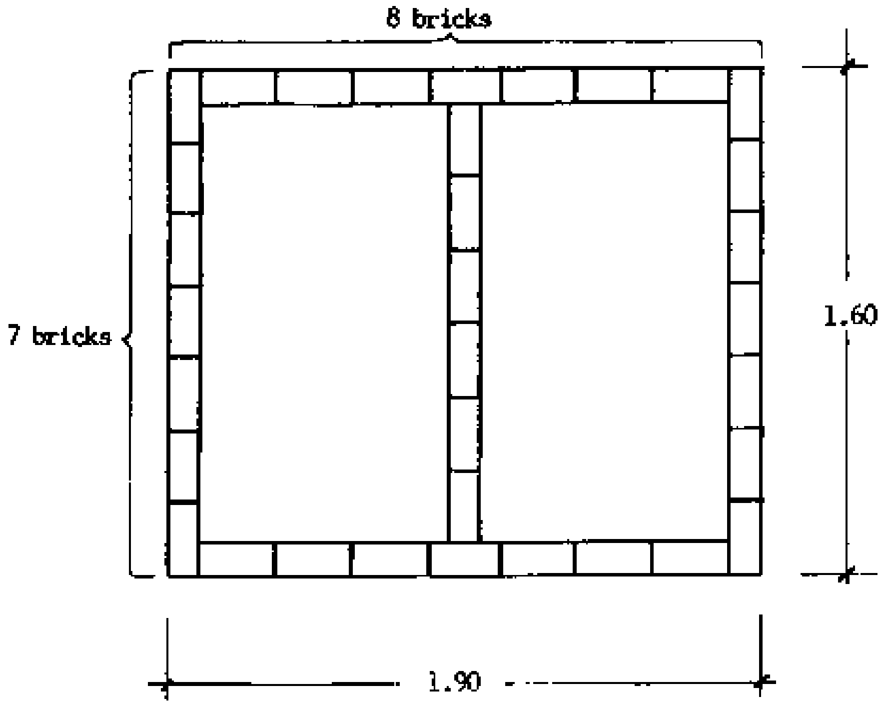

8 × 22 cm = 176 cm
8 × 1.75 cm = 14 cm
190 cm

7 × 22 cm = 154 cm
6 × 1 cm = 6 cm
160 cm

- Build the second course.

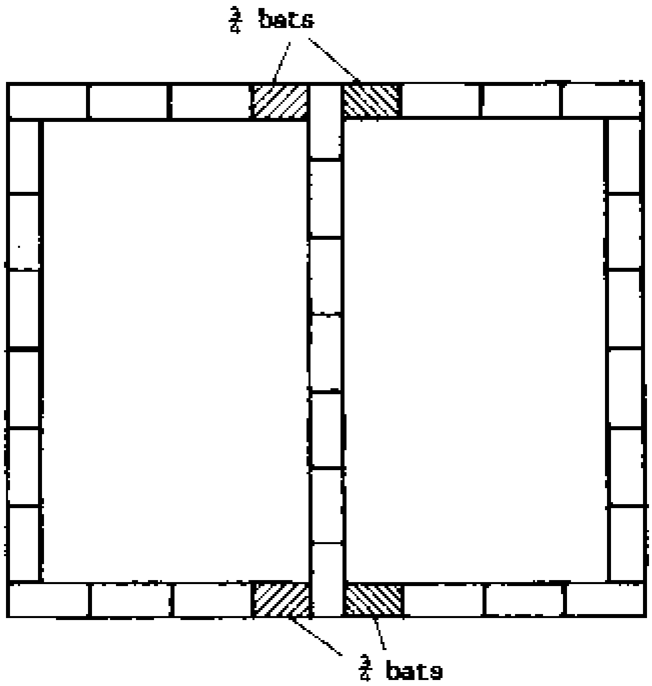

SCALE 1:25

- Build again the first course and continue building first and second course alternatively.

- Check the measurements and diagonals from time to time; check as well if the walls are vertical.

- Continue to build the walls until about 30-40 cm above ground; however, leave the openings for ventilation and to the ventpipe.

- Build the foundation for the ventpipe.

- For details see also 6.7, Bricklaying.

5. Plastering

- Plaster the two pits inside with cement mortar (mixture see C).

6. Preparing the Lids

- Make a heavy concrete lid for the squatting hole not to be used.
- Make a wooden lid with handle for the other squatting hole.

Concrete Lid:

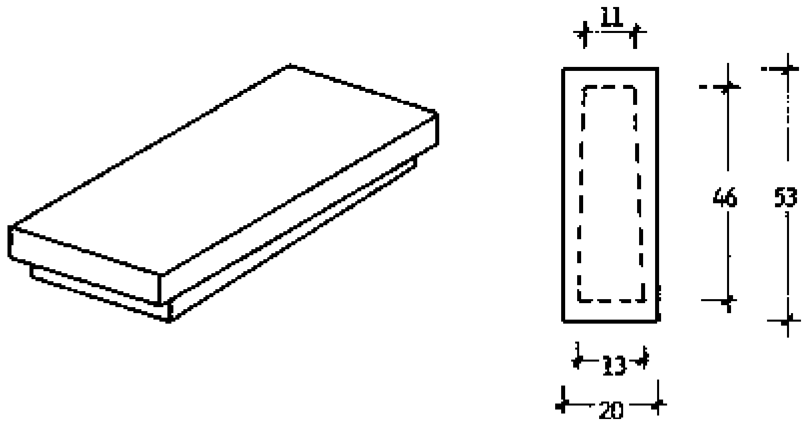

Wooden Lid with Handle:

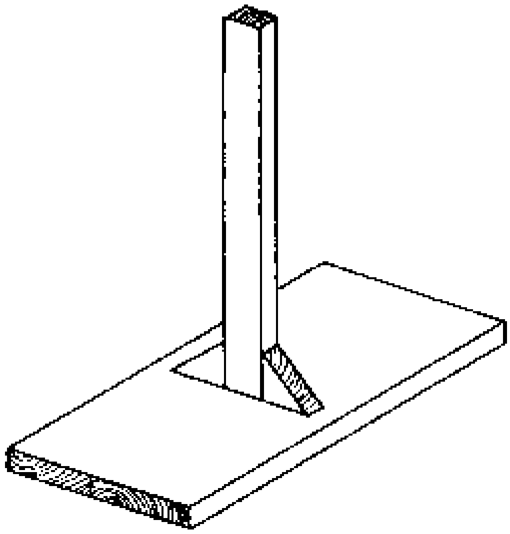

SCALE 1:15

7. Placing the Slabs

- The slabs must have been cured at least for two weeks before you can place them on the pit.

- Place cement mortar on the wall where you place the slabs.

- Place the slabs. The mark for the reinforcement Ø 10 mm must be above the pit, not above the wall. The additional reinforcement Ø 10 mm acts instead of a beam which spans the pit.

- The squatting positions must face each other (see drawing).

- Make sure with the spirit level that the slabs are horizontal. Fill in all cracks with cement mortar.

- Place mud mortar on the wall where you place the covers.

- Place the covers. Fill in all cracks with mud mortar.

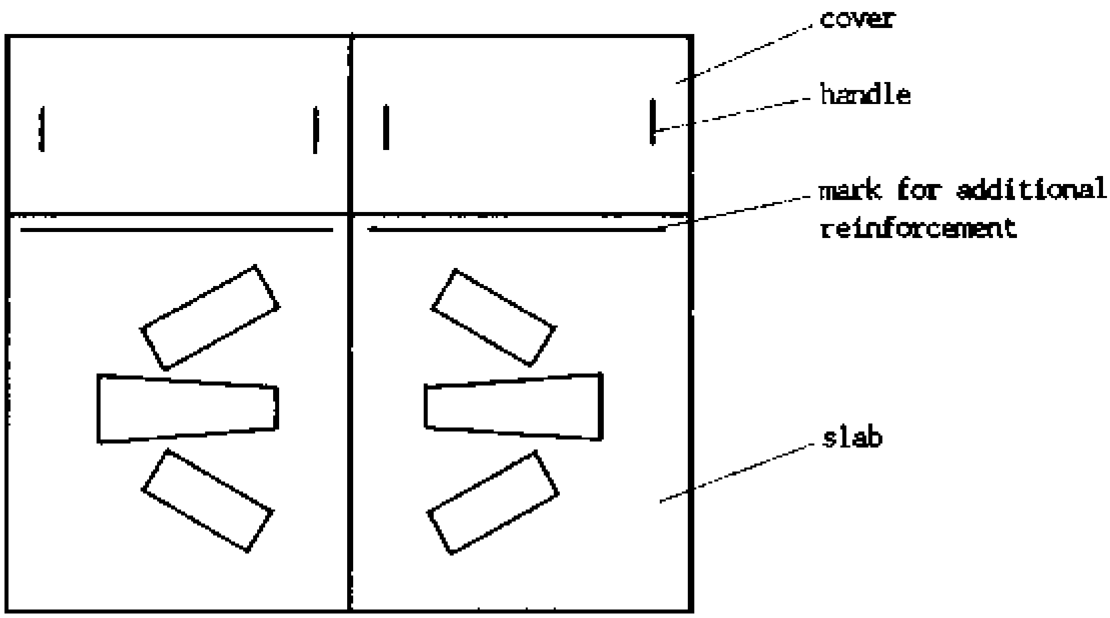

8. Superstructure

The superstructure is to be built by the owner. Its construction is conventional building. It can be done with permanent or local materials and shall not be described here.

9. Fixing the Ventpipe

Manufacturing ventpipes is described in 9.15. When the superstructure is completed,

- Fix mosquito wire on top of the ventpipe with wire.
- Fix a small roof on top of the ventpipe against rain.
- Fix the ventpipe in its foundation with cement mortar.
- Connect the ventpipe with the superstructure with an anchor from flat iron or similar.

10. Preparing the Latrine for Handover

-Clean the pits and slabs from mortar and brick rubble. The pit must be dry.

- Prepare the pit for use as described in 9.16.
- Put earth over the covers as an additional seal.
- Put the heavy concrete lid on the squatting hole not to be used first.
- Put the wooden lid on the other squatting hole.
- Place a basket with ashes or sand with a tin, a broom and papers in the latrine.
- Fix the posters for instruction on the wall.

11. Operating Instruction

After the technical work is done, inform the community development staff to conduct an operating instruction for the users of the latrine (see 9.17).

C) Materials Needed for a Compost Latrine, Standard Size, without Superstructure

Work	Cement Buckets	Sand Buckets	Gravel Buckets	Mixture	Bricks	Other Material
slabs	3	8	6	1:2.7:2	---	1 welded mesh plus reinforcement Ø 10
finish of slabs	1/2	---	---	---	---	---
filling under floor	---	---	10	---	---	---
floor	3	8	10	(1:3:4)	---	***
walls	$4\frac{1}{2}$	18	---	1:4	700	---
ventpipe foundation	$\frac{1}{2}$	2	---	1:4	30	---
plastering	2	12	---	1:6	---	---
fixing slabs and ventpipe	$\frac{1}{2}$	2	---	1:4	---	ventpipe mosquito wire
steps	$\frac{1}{2}$	4	---	1:8	20	---
contingency	$1\frac{3}{4}$	26			250	
Total	$16\frac{1}{4}$ = 5 bags		50		1000	

1 bag of cement = $3\frac{1}{4}$ buckets; 1 bucket is about 10 litres;

*** in black cotton soil put 2 layers of welded mesh into the floor (see 6.6/11).

9.15. Ventpipes

Some basic information about ventpipes for latrines and a way to manufacture ventpipes locally are compiled here.

A) <u>General Information</u>

A correctly installed and well maintained ventpipe is an improvement for any pit or compost latrine. It has the following functions:

1. It provides ventilation for the pit. The gases produced during composting can escape.

2. It enables the contents of the pit to dry (in a hot climate).

3. It acts as a fly-trap.

In order to serve these purposes, the following conditions must be fulfilled:

1. The ventpipe must have a sufficient diameter, either a smaller diameter with smooth inside surface or a larger diameter with rough inside surface. 10 cm diameter is the minimum for smooth pipes, 15 - 20 cm diameter is better.

2. The ventpipe must be long enough; it should reach higher than the highest point of the roof (to avoid turbulences above the ventpipe).

3. It is an advantage if the ventpipe is dark or black because it will heat up more and, thus, create an upward draft.

4. It should be exposed to sun. The sun will heat it up and create an upward draft.

5. Rain should be prevented from entering the ventpipe by a small cover. There must be sufficient space between the top of the pipe and the cover to allow air to pass (drawing see 9.3/3).

6. The top of the ventpipe must be sealed with mosquito wire to prevent flies from escaping and, thus, kill them. As the gases produced by the composting process are highly corrosive, ordinary mosquito wire gets holes after some time. It is most essential to replace the mosquito wire every 6 to 12 months.

7. The footing of the ventpipe must have no cracks which would allow flies to escape.

A ventpipe with its screen torn is worse than a latrine without a ventpipe. The warm gases escaping from the ventpipe will attract by their smell more flies than without a ventpipe. You can feel the gases with your hand over a ventpipe if the composting process has already begun.

Therefore, you should only install a ventpipe if you or the users are able and ready to maintain it, i.e. to replace the mosquito wire regularly. Otherwise, it is better to have a latrine without a ventpipe. Such a latrine can also function well and be smell-free if sand and ashes are poured into the pit after each use.

B) Manufacturing Ventpipes Locally

Manufacturing ventpipes locally might be an alternative to industrially produced plastic or metal pipes which can be expensive depending on the logistics facilities of the area. Do not use asbestos cement pipes because mining and production of asbestos cause asbestosis, a deadly lung disease for the workers.

Also, local manufacturing encourages local skills and local trade and provides work and income.

Ventpipes from ferrocement, inside Ø 20 cm, can be produced according to the following steps:

1. Make a mould for the ventpipe by sewing a 0.65 m × 2.50 m sack-cloth to form a sleeve or pipe. Preferably, take good quality sack-cloth or canvas.

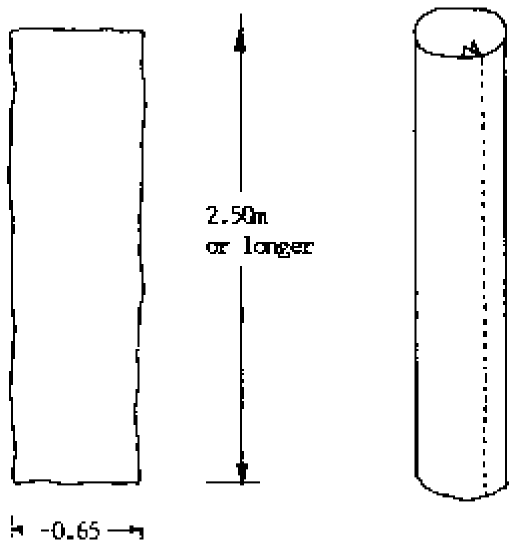

2. Fix a ring of reinforcement Ø 8 mm or a ring of flat iron, 2 cm broad, on top and bottom of the sack-cloth pipe. A double ring from flat iron to be closed by a bolt can be easily fixed and removed again. The sack-cloth is clamped in between the two rings.

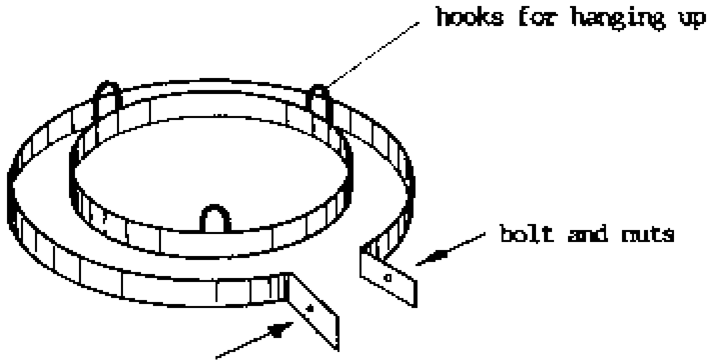

3. Dip the sack-cloth pipe into water until it is completely wet.

4. Hang the top of the sack-cloth pipe on the roof truss. Place some bricks and a piece of plywood under its bottom end.

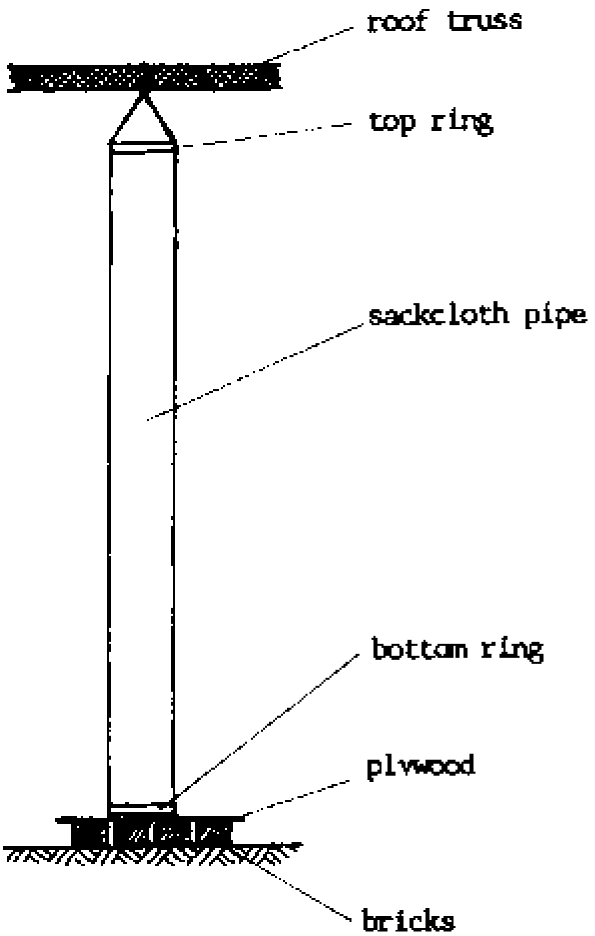

5. Fill the sack-cloth pipe with sand from the top. Take care that it is straight.

6. Mix cement mortar 1:4.

7. Plaster the sack-cloth pipe evenly in a 1 cm thick layer.

8. Cover the pipe with a nylon sheet.

9. Next day wrap one layer of chicken wire around the pipe.

10. Make the pipe wet.

11. Add a second layer of plaster 1 cm thick. Smooth the outside of the pipe.

12. Cover the pipe with a nylon sheet and keep it wet for three days,

13. Wait for seven days.

14. Remove the bricks and the plywood.

15. Remove the sand.

16. Lower the pipe to the ground.

17. Remove one of the rings holding the sackcloth.

18. Pull out the sackcloth pipe.

19. Store the pipe carefully and let it cure for another two weeks.

A ventpipe of this kind is quite heavy. The inside is not completely smooth and the pipe might not be completely straight, but the large diameter compensates for that.

The ventpipe is quite strong once installed, but not very resistant to damages during transportation. It should not be transported over long distances by car and should be handled with great care.

The ventpipe can also be manufactured without chicken wire (because of the costs). In that case it must be carefully kept wet for three days and even more care is needed for transportation.

Another alternative to produce ventpipes locally is by making chimney blocks. Square blocks with a round opening are made from a cement/sand mixture or cement/soil mixture and then built as a ventpipe into the corner of the latrine (see bibliography No. 46, April 83).

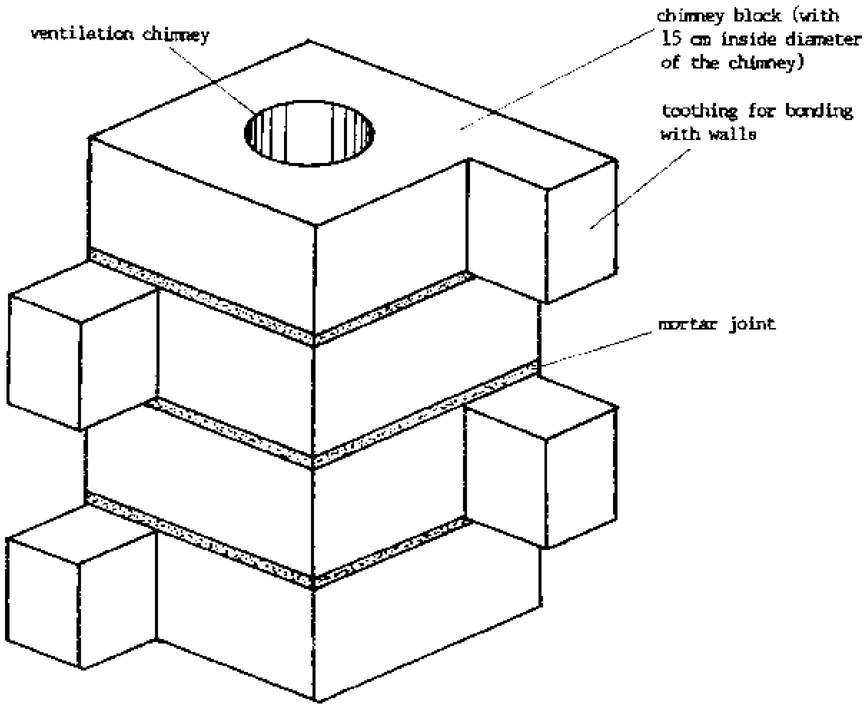

9.16. Operation and Maintenance of a Compost Latrine

The following operating instructions are primarily intended for a compost latrine. But they are as valid for all sanitation systems without water, like

- pit latrine of local materials,
- VIP (ventilated improved pit latrine),
- children's squatting slab.

Any pit latrine will function better if managed like a compost latrine.

A) Essential Equipment Inside the Latrine

The following items are vital for a well kept latrine. Provide, maintain and replace them when broken:

- basket or any other container with ashes and sand,

- calabash or tin for sprinkling ashes and sand,

- container with waste paper or toilet paper (if people use paper for anal cleaning; when paper is not provided, people might use the leaflets from the wall for their cleaning),

- broom (not to be used elsewhere),

- removable lid for squatting hole,

- permanent, heavy lid for squatting hole of the second receptacle (from concrete or timber with a heavy stone; see 9.14/19),

- instruction leaflets and posters on the wall.

B) Starting-up a Latrine

Before the latrine is used for the first time, put into the receptacle some loosely packed organic residue: grass, weeds, leaves, sawdust, yard sweepings. This absorbs liquids, provides carbon for the composting process, increases the variety of micro-organisms and prevents the pile from becoming too compact. All compost and pit latrines will function better if you start them up like this.

C) Daily Use

The daily use is described in the leaflet following which is to be used for explanation and shall be finally fixed on the wall of the latrine.

These rules are the core of good latrine keeping. Success of a latrine will depend on keeping them or not. The reasons for these rules are given in chapter 9.13.

It is not easy to introduce these rules in an extended family, an office or school community, etc., using a latrine together.

How to use your compost latrine

1. Put some sand or ashes into the hole after each use!

2. Close the lid after each use!

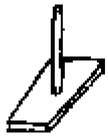

3. If dirty, pour sand over the dirt and sweep it into the hole!

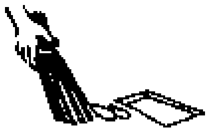

4. Put grass, leaves, sweepings, kitchen left overs into the hole several times a week!

5. **Do not** pour any water into the hole! Clean the latrine dry or with wet grass, but do not rinse it with water!

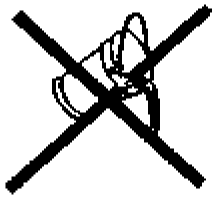

6. **Do not** put glass, tins or plastic into the hole!

7. **Do not** use desinfectant, old engine oil or DDT!

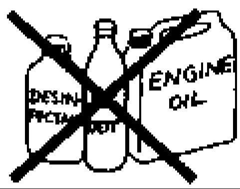

Sudan Council of Churches
Munuki Water and Sanitation Project
1.1.85/MGG

Sika ita stamilu al bachana min ufraten

1. Kutu ramla walla romat basit fi ufra bad ita stamilu!

2. Gafulu kuta bad ita stamilu!

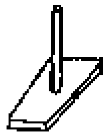

3. Kan waskan kubu ramla fogu wasaka de wa nadifu jua al ufra!

4. Kutu gesh, warsal, wasaka al nadifu min midan taki wa min madba fi ufra kullu usbu!

5. Mata kubu moya fi ufra kullu kullu! Nadifu mustra yabis walla ma gesh al bilu be moya, lakin ma ta kasilu ma moya!

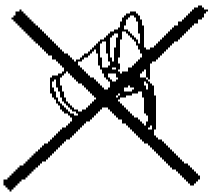

6. Mata kutu gisasat walla hilbat walla listic walla naylon fi al ufra kullu kullu!

7. Mata stamil Dettol walla Finik walla zet mahruk walla DDT kullu kullu!

1985/MGG

Mejles al kanais - Juba, Munuki

1985/MGG

Sudan Council of Churches - Munuki Water and Sanitation Project - Juba, Box 209

To run a compost latrine successfully requires a kind of "administration", such as home administration or school administration. The up-keep needs to be organised, implemented and followed up.

We suggest compiling the work which needs to be done regularly in a check list:

Tasks of the person caring for the latrine:

Daily

- Sweep the latrine.

Once a Week

- Fill the basket with ashes and sand.
- Fill the basket with paper.
- Sweep the walls.
- Put grass and leaves into the latrine.
- Check posters and leaflets.
- Check the contents of the pit whether they are dry.
- Check if the outside lids are well covered with earth.
- Check the screen on the ventpipe.

The following suggestions shall help to ensure a proper up-keep:

1. A person needs to be assigned for overall responsibility concerning the latrine, preferable an elderly person or somebody else with authority. The up-keep of latrines does not work if no one or everybody is responsible. For the daily and weekly up-keep, the different members of the community can be assigned in weekly shifts. The person in overall charge shall remind and encourage the members in their tasks.

2. Repeated instructions of the community or family are necessary, like an operating instruction in the beginning and follow-ups later on. Sit down from time to time with the family/community to discuss problems and remind the members of the correct use.

3. Make use of the psychological effect: A clean place is much less likely to be messed up than a dirty one. Keep your latrine very clean and people will hesitate to mess it up.

4. Keep an eye on who is using the latrine. Usually it is always the same people who notoriously make the latrine dirty. Check the latrine after such a person has used it and, if it is dirty, call her/him back to clean it. Insist that the one causing the dirt will clean it him/herself without quarrelling.

5. Do not use latrine cleaning as a means of punishment or threat for faults of other kind. Do not assign the lowest status people in the family/community for latrine cleaning. This produces the deep impression that latrine cleaning is something shameful and disagreeable. On the contrary, try to explain that by cleaning the latrine we are contributing to the life cycle and preventing diseases, which is a very important and honourable task. Additionally, as Christians we are called to the service of others.

D) Changing Vaults (see leaflet following page)

When the receptacle of a compost latrine is almost full, cover the pile with grass and soil. Close the vault with a heavy lid and start up the second receptacle.

E) Removing Compost

When the second receptacle is nearly full, it is time to remove the compost from the first one. Take off the cover, and remove the contents with hoe and shovel. Do not remove all of it, but leave some to give the new pile a good start. The compost should by now be fairly dry, soil-like and completely odour-free. It is very much reduced in volume. It is not any more dangerous to handle than soil in the garden. Carry the compost to the garden and put it into a shallow trench. Cover it with about 10 cm of topsoil and grow vegetables on top.

F) Number of Users

A compost latrine should not be overloaded; that is used by too many people. 15 to 20 people can use the standard size of compost latrine (volume 2.7 m^3) and will need about one to one and a half years to fill one receptacle. All kitchen waste of the same number of people should be added to provide sufficient carbon.

G) Maintenance of the Latrine

Keep the outside covers (those used when emptying the latrine) well covered with earth. Arrange the ground around the latrine so that surface water drains away.

Check the screen on the ventpipe. If it has a hole, replace it. Ordinary mosquito screen might be corroded after 3 months only.

How to empty your compost latrine

1. Use one receptacle only! The other one is closed with a permanent lid.

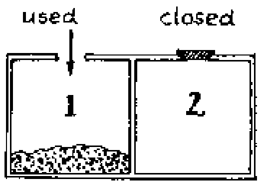

2. When almost full, put grass and soil into receptacle and close it with the permanent lid! Use the second receptacle!

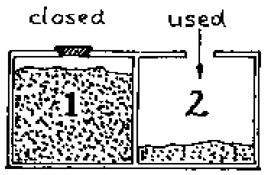

3. When the second receptacle is almost full, put grass and soil into it and close it with the permanent lid! Empty the first receptacle with hoe and shovel! Use the compost in the garden! Now use again the first receptacle!

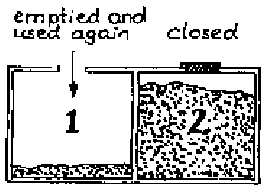

4. Continue to use the 2 receptacles alternatively, one at a go!

5. When emptying, repair any cracks with cement mortar and replace the masquito wire on the ventpipe if corroded!

1985/MGG

Sudan Council of Churches - Munuki Water and Sanitation Project - Juba, Box 209

Teriga anina befadi al bachana min ufraten

1. Stamil safa wahid bas! Tani da yakun magful tamam.

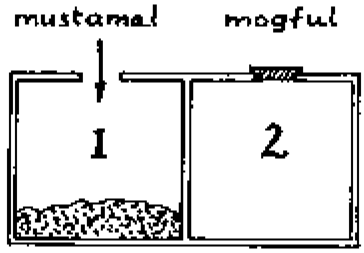

2. Kan gerib malyan kutu gesh wa torab fi al ufra wa gafulu tamam! Stamil al ufra tani de!

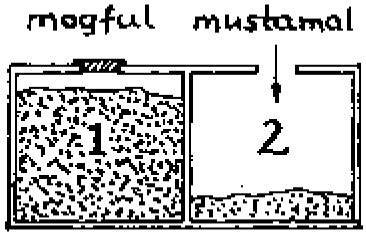

3. Kan ufra tani gerib malyan, kutu gesh wa torab fogu wa gafulu tamam! Fadi al ufra nimra wahid be toria wa korek! Stamil tin al kwais da fi jenena betak! Hassa raja fi ufra nimra wahid!

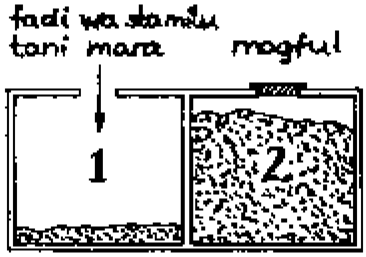

4. Stamir stamilu al ufraten be dor!

5. Assa ita be fadi, salau mahalat moksurin be muna sement wa salau al numulia fog al masura kan karabu!

Mejles al kanais- Juba, Munuki

1985/MGG

Sudan Council of Churches - Munuki Water and Sanitation Project - Juba, Box 209

كيف تتفرغ مراحيضك

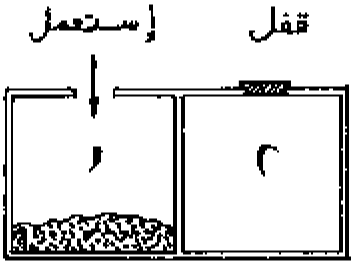

١ استعمل واحد حفرة فقط و
تقفل حفرة الثانية بالغطاء ثابتة

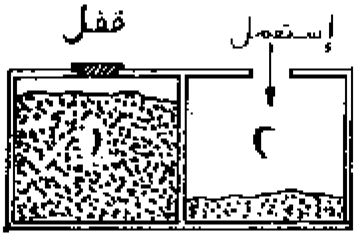

٢ وإذا ملى الحفرة الاول ضع القش
و التراب على الغطاء ثابتة و
استعمل الحفرة الثانية.

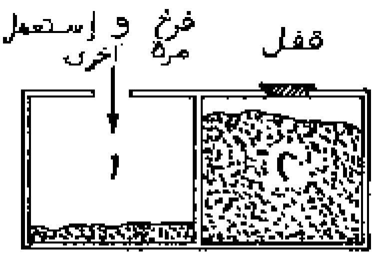

٣ وإذا ملى الحفرة الثانية وضع
القش و التراب عليها و اقفلها ثم
اخرج البراز بستعمال الجاروف و
بعد إخراج البراز أدفنها فى المزرعة
الاخضروات و الان إستعمل الحفرة
الأول.

٤ وتستمر هزة الطريقة بعد ملى كل حفرة حتى
حيث أخرى.

٥ إذا تريد أن تفرغ صلح الاماكن المكسورة
بتسعمال السمنت و الرمل ثم النملية على
ماسورة التهوية.

مجمع الكنائس في السودان، جوبا، ص.ب ٢٠٩
مشروع منوكي للإصحاح و الماء

1985/MGG

H) Rehabilitation of a Compost Latrine

A well kept compost latrine is odour-free and without flies. But what to do if the slab looks like a "map", is full of urine and faeces, with hundreds of flies swirling around, and the pit is like a smelly pool??? Such a latrine needs a general rehabilitation.

1. Procedure

- Scratch all faeces from the slab with sticks into the hole.

- Pour lots of sand and ashes over the wet slab and let it soak.

- Brush the sand into the pit and repeat several times.

- Pour earth, sand and ashes into the pit until no water can be seen anymore and the contents are wet, but not soaked. You might need quite a lot of material for that.

- Pour grass, leaves and especially ashes in plenty into the pit. The contents most likely have too much urine and not enough carbon.

- Clean the inside of the latrine including walls.

- Rub the slab with wet grass or wet sponge and throw it into the pit. Do not rinse the slab with water.

- Pour ashes over it and sweep them in.

- Replace or provide baskets with sand and ashes, paper, broom, lid, etc.

- Check the outside of the latrine for eventual necessary maintenance.

- Seriously advise the users for future use.

If such a rehabilitation is done in time, the pile can still decompose reasonably. If you have to empty a compost pit and the contents are not decomposed but a cesspool, it will be very unpleasant to empty it (by hand or desludging truck).

Learn from experience and keep the latrine better.

Do not blame the compost latrine, but the people who failed to teach and implement the proper up-keep.

2. Example for a Rehabilitation of a Compost Latrine in an Institution (School or Office)

The following detailed action plan is advisable if we want durable improvement. For compost latrines in private homes the rehabilitation process is to be simplified but keeping to the same basic steps.

- Form a group to work on this task.

- Contact the persons responsible for the compost latrine(s) and ask for permission and support for the action.

- Prepare an "action plan".

- Develop a questionnaire.

- Test the questionnaire.

- Prepare and duplicate the final questionnaire.

- Conduct interviews with the users.

- Inspect the compost latrine and write a small report.

- Evaluate interviews and inspection.

- Prepare users' meeting about problems.

- Conduct the meeting with the aim of a decision about how to manage the compost latrine(s) in future.

- Do the practical rehabilitation including cleaning, making the pits dry, and providing missing equipment.

- Prepare operating instruction with drama, poster and health education.

- Conduct operating instruction.

- Handover the compost latrine(s) with the keys to the people in charge.

- Follow up the compost latrine regularly for eventual problems.

Guidelines for conducting the interview:

- Introduce yourself.

- Ask if the time is suitable.

- Explain purpose of interview (which is: gathering information about compost latrines in general, gathering information for improving the compost latrines on the SCC compound).

- Ask if the person is ready for the interview.

- Ask the questions and fill the questionnaire. Make sure that the person has understood the question properly. Do not comment on the answers. Note down the answers also if they are wrong.

- Ask if you can note down the name of the person. If not, note down only male or female.

- Hand out the anonymous questionnaire. Ask for it to be filled in and thrown into the closed box.

- Thank for the interview.

Sudan Council of Churches * Munuki Water and Sanitation Project

INTERVIEW OF COMPOST LATRINE USERS ON THE SCC COMPOUND

QUESTIONNAIRE

1- Did you hear about compost latrines? yes/no

2. Do you know what a compost latrine is? yes/no

3. How many pits does a compost latrine have ....

4. Why does a compost latrine have two pits?
....
....
....

5. What happens with the contents of a compost latrine?
....
....
....

6. Why do we need to put ashes or sand into the compost latrine after defaecation?
....
....
....

7. Why must the squatting hole always be covered by the lid?
....
....
....

8. Do you like compost latrines? yes/no
Why?..
....
....

9. Do you see any difference between the left and the right compost latrine on the SCC compound? yes/no

10. Are there any problems with the compost latrine on the right side yes/no

Which problems?..
....
Is the latrine dirty? yes/no

11. What do you think are the reasons for these problems?
....
....

12. Are there any problems with the compost latrine on the left side? yes/no

Which problems?..
....
Is the latrine dirty? yes/no

13. What do you think are the reasons for these problems?
....
....

14. How do you think these problems could be solved?

....
....
....
....

15. Are you ready to attend a meeting about the latrine problem? yes/no

16. Can your department contribute regularly money for the latrine up-keep? yes/no

17. Are you ready to participate personally in the latrine cleaning in shifts? yes/no
only if...
....

18. Are you ready to attend an information meeting for the users? yes/no

19. Would your department like to take over responsibility for the care of one of the compost latrines? yes/no

20. Which of these suggestions No. 15-19 would you prefer? No.......

21. Do you have any further comments or suggestions?
....
....
....
....
....
....
....

22. Are you ready to give
your name:..
title:...
department:..
male/female

Date of Interview........................ Name of Interviewer:..

Sudan Council of Churches * Munuki Water and Sanitation Project

GATHERING INFORMATION ABOUT COMPOST LATRINES ON THE SCC COMPOUND

QUESTIONNAIRE

Please kindly answer the following questions. They are necessary for gathering information about the sanitation situation on the SCC compound. Make a cross at the correct answer. You can cross several possible answers. Do not write your name on the questionnaire. Please, throw the filled questionnaire into the closed box in the Munuki office. Thanks.

1. Are you

0 male
0 female

2. Where do you go for a long call?

0 outside the SCC compound into the bush
0 to the flush latrine (WC) near the dispensary
0 to the flush latrine (WC) in one of the guest house rooms
0 to the compost latrine on the left side
0 to the compost latrine on the right side

0 at home

3. Where do you go for a short call?

0 outside the SCC compound into the bush
0 at the fence
0 in the bathroom behind the generator
0 to the flush latrine (WC) near the dispensary
0 to the flush latrine (WC) in one of the guest house rooms
0 to the compost latrine on the left side
0 to the compost latrine on the right side
0 at home

******

9.17. Operating Instruction for Compost Latrines

For all compost latrines built, an operating instruction is conducted for the users. The most important point is not just to have a latrine building, but to use it properly and keep it clean. Otherwise, it will be worse than defaecation in the open and not only become a nuisance, but a danger to health as well.

Therefore, the operating instruction is aimed at giving the future user an idea about what they can do to keep and maintain the latrine properly to avoid problems. It is conducted at the place of the latrine with <u>all</u> members of the household or institution who are going to use the latrine.

The methods used are demonstration, drama, posters, model, leaflets, flip-chart, songs, depending on the audience and the time available (see 4.26 to 4.29).

The topics covered are as follows:

- Why do we need a latrine?

- What is a compost latrine?

- How do we use a compost latrine?

    * every day (see poster series attached)
    * when full (see poster series attached)

- What else do we need to pay attention to?

    * Who is responsible for taking care?
    * What to do if there are problems?

The operating instruction will be followed by regular follow-up visits (see 9.18) and may be repeated if need be.

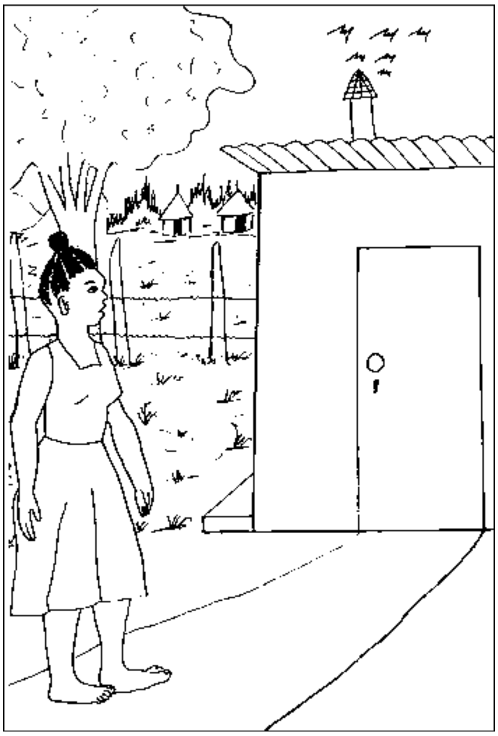

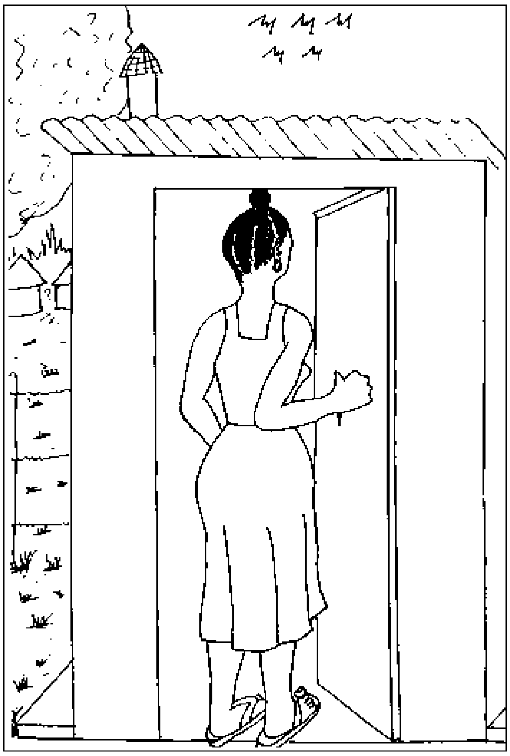

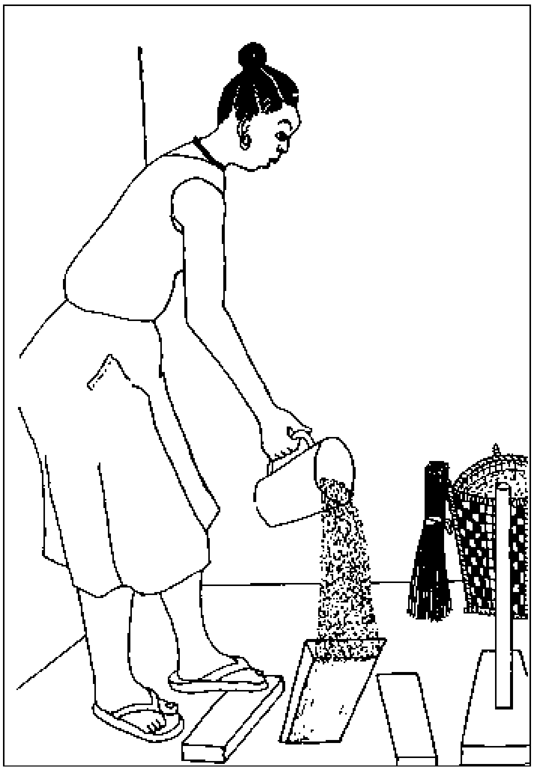

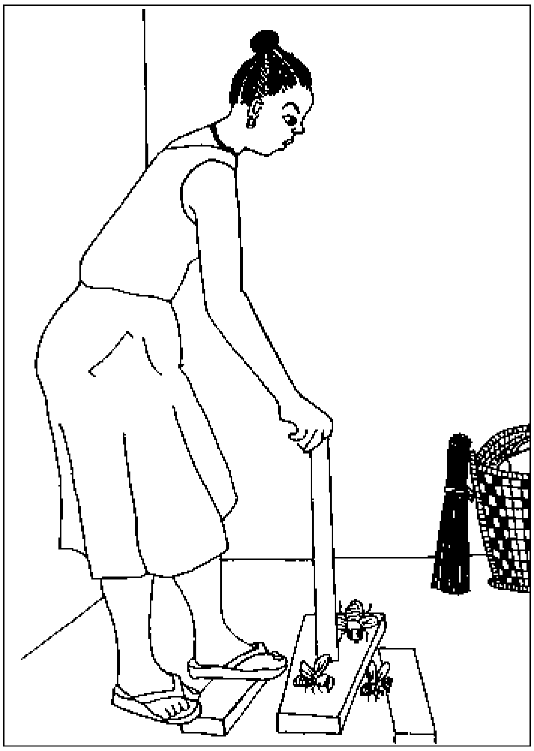

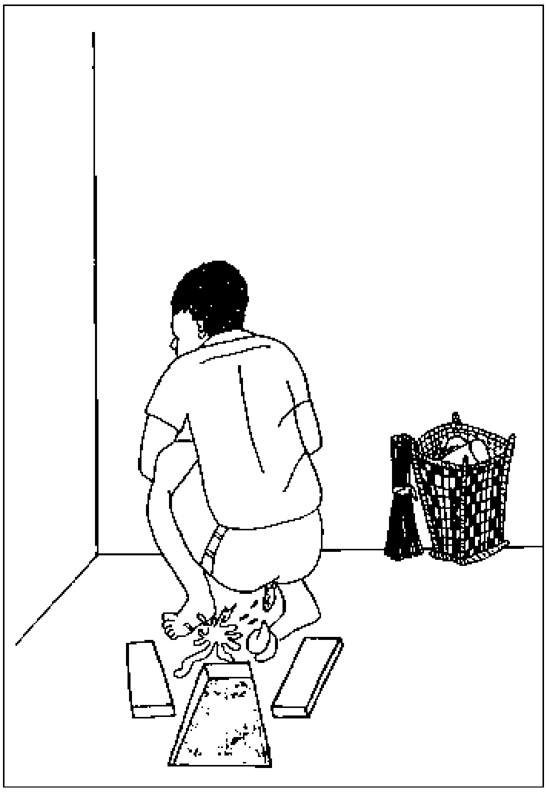

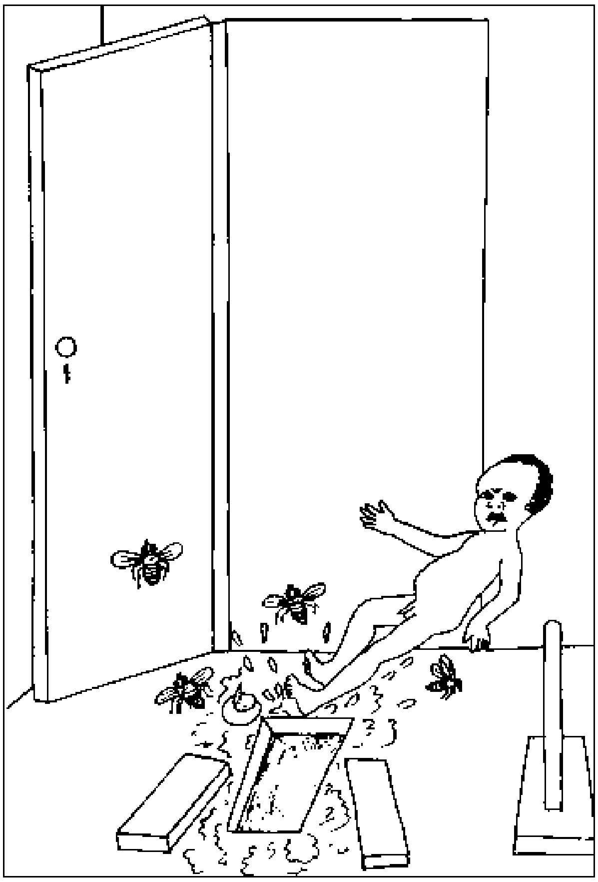

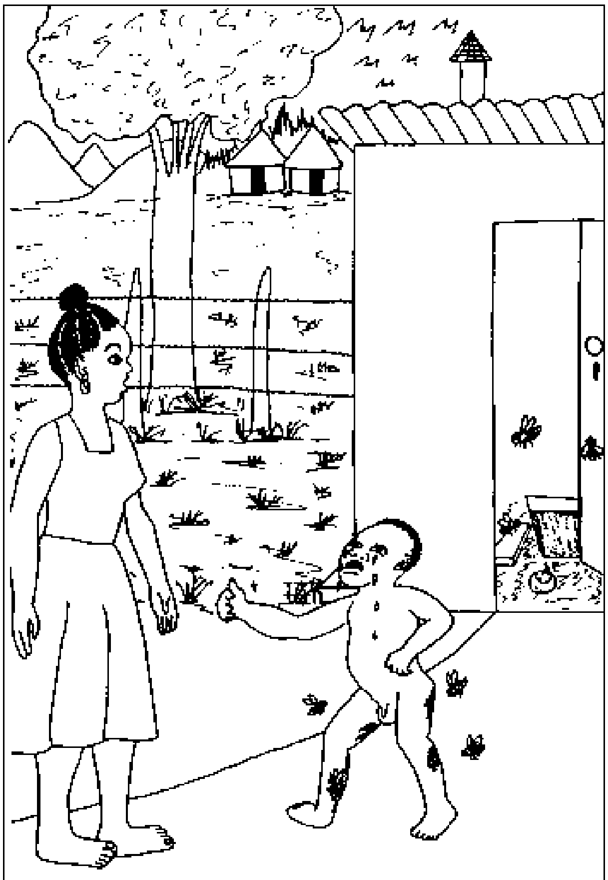

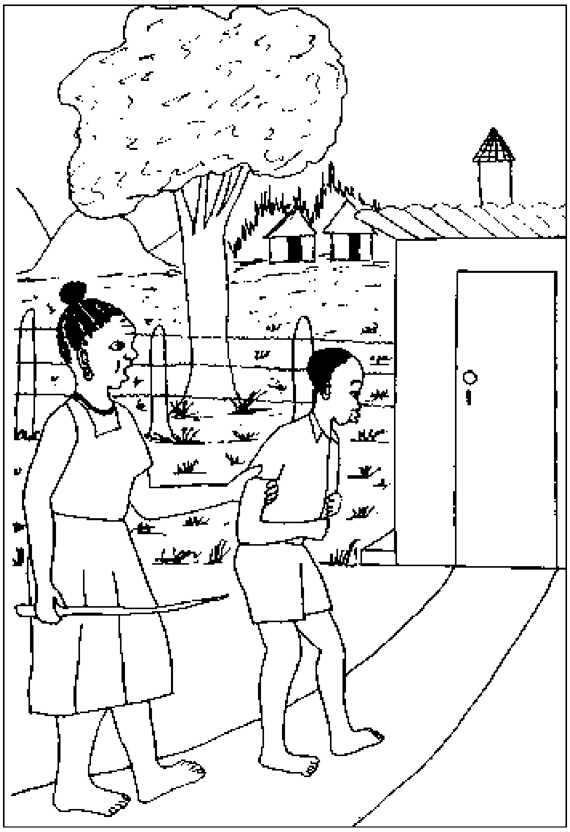

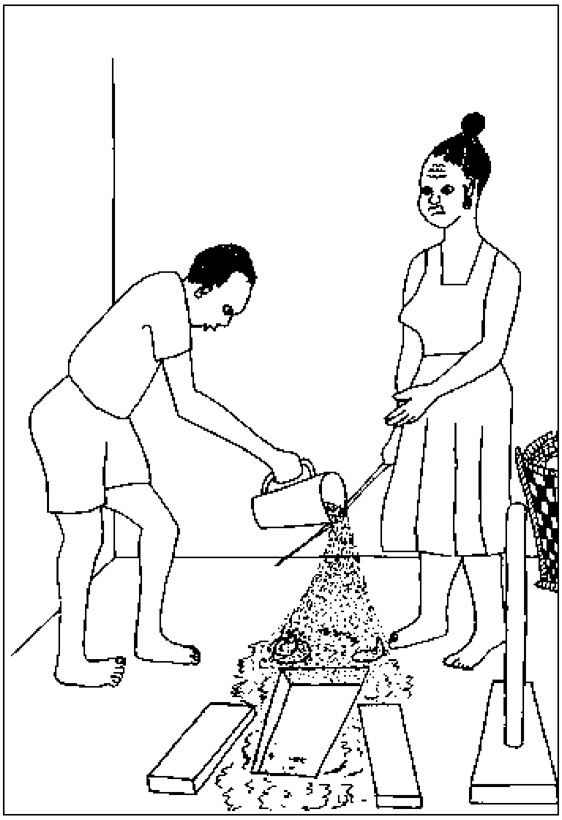

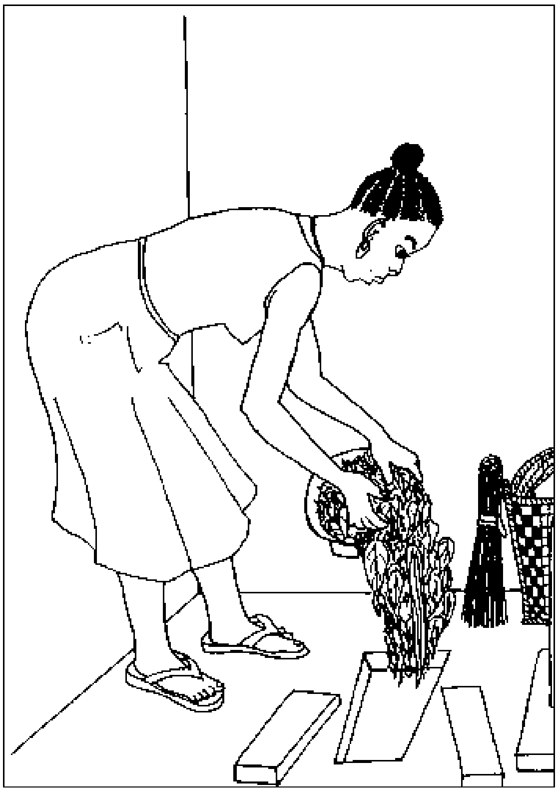

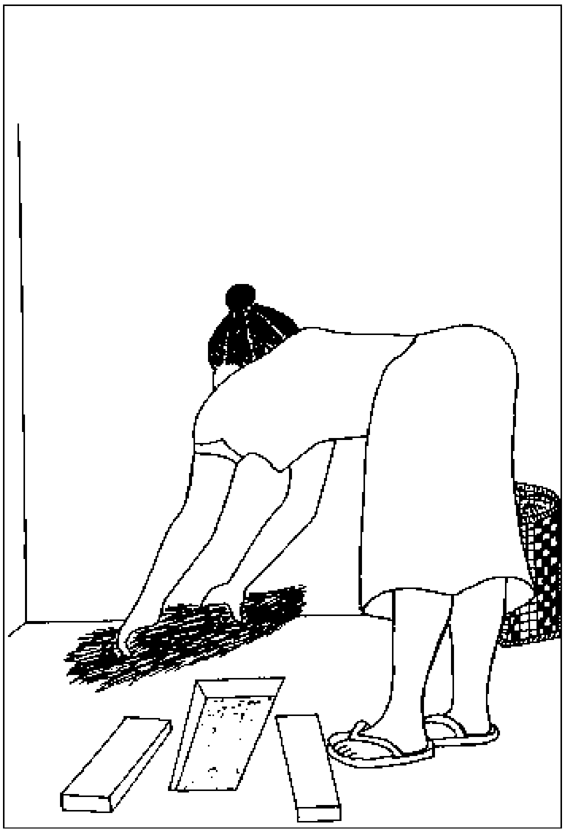


OLD ENGINE OIL

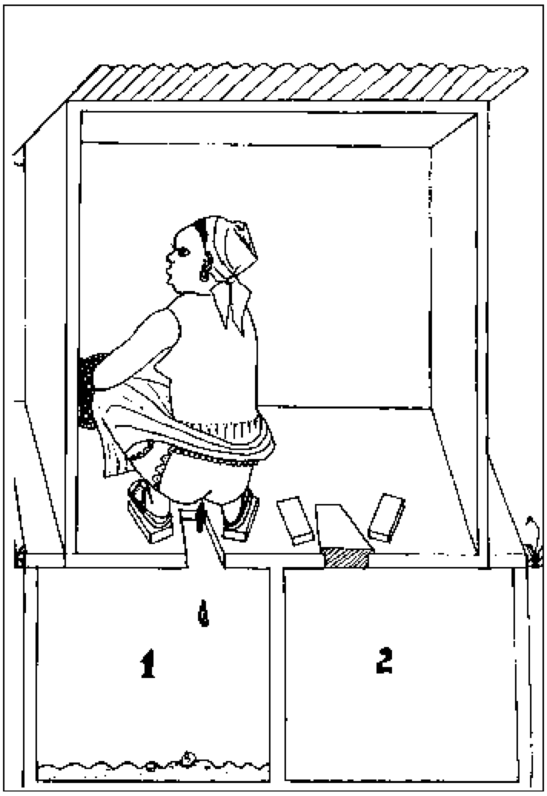
1
2

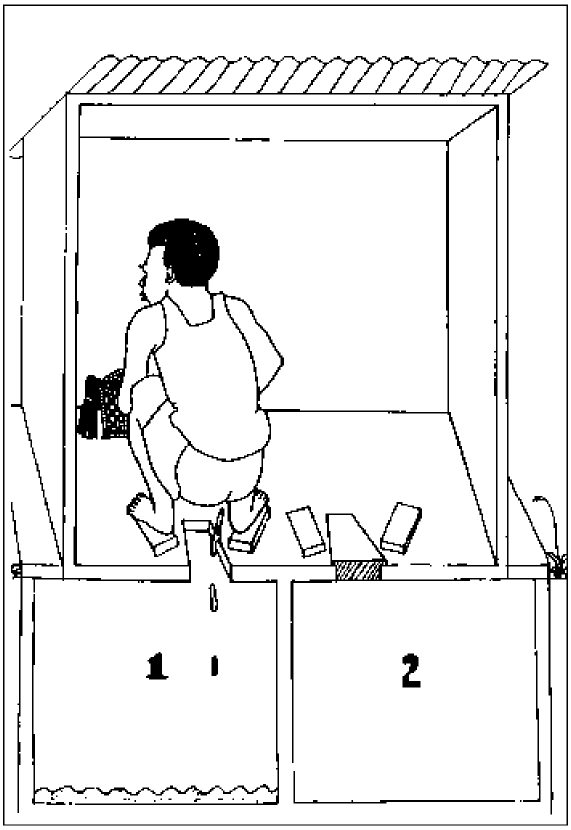
1
2

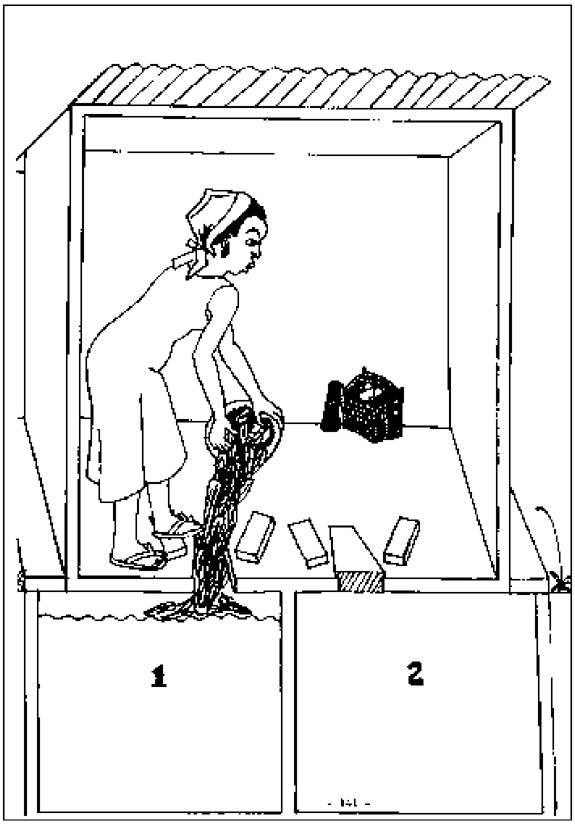
1
2

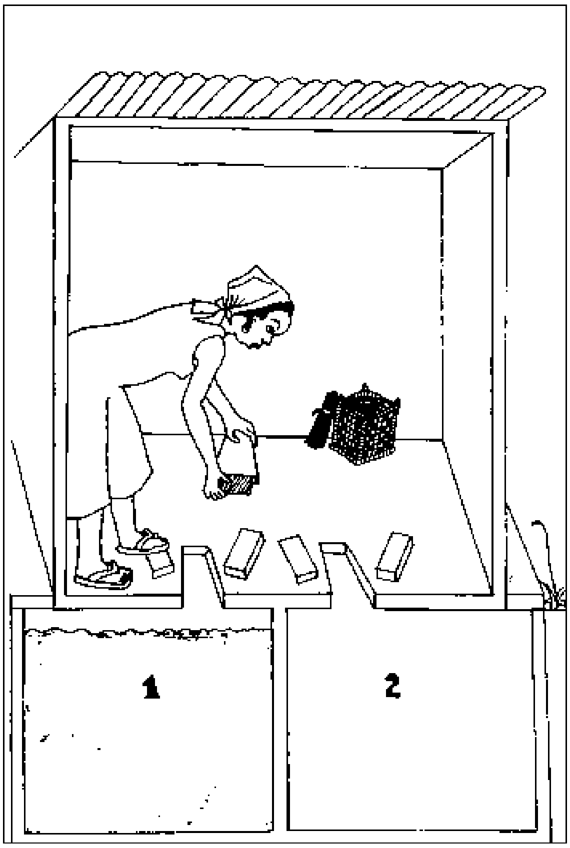
1
2

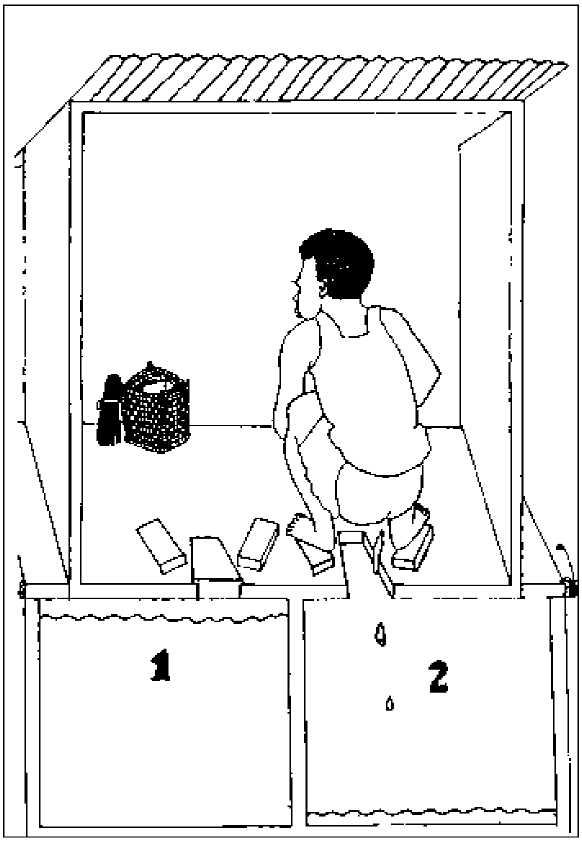
1
2

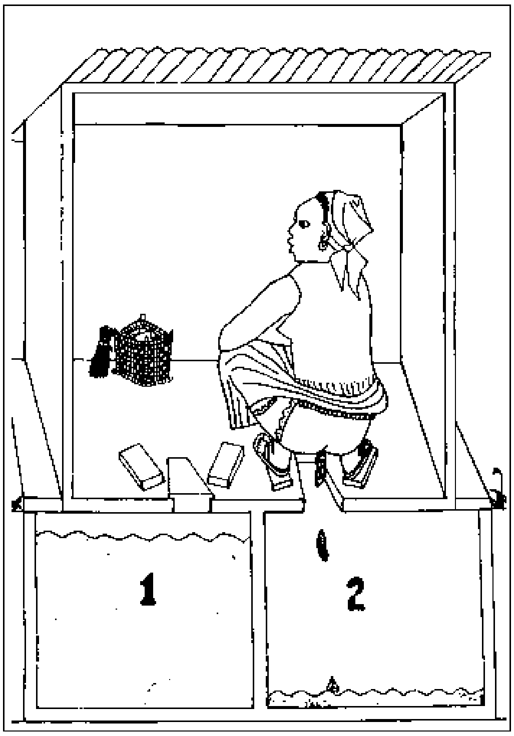

1
2

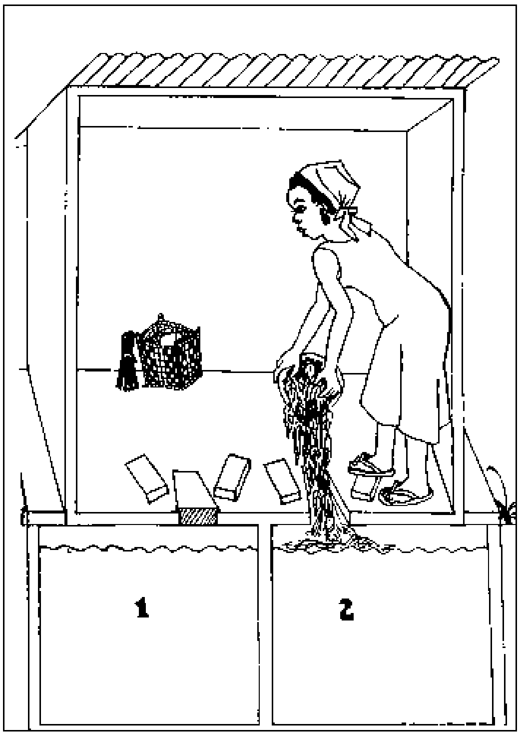

1
2

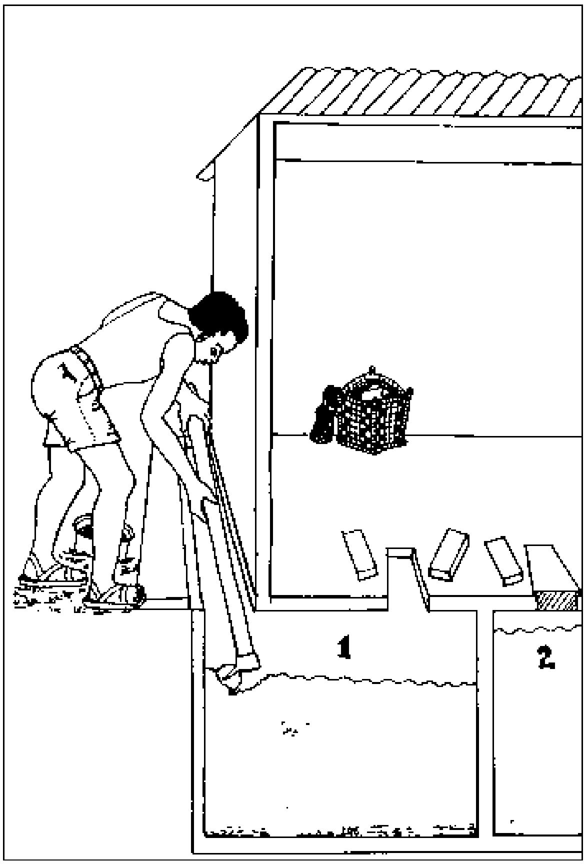
1
2

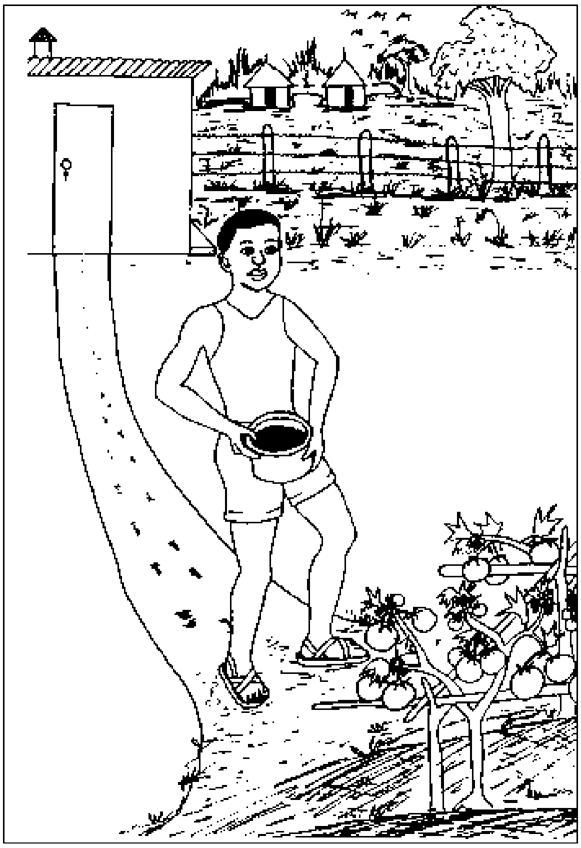

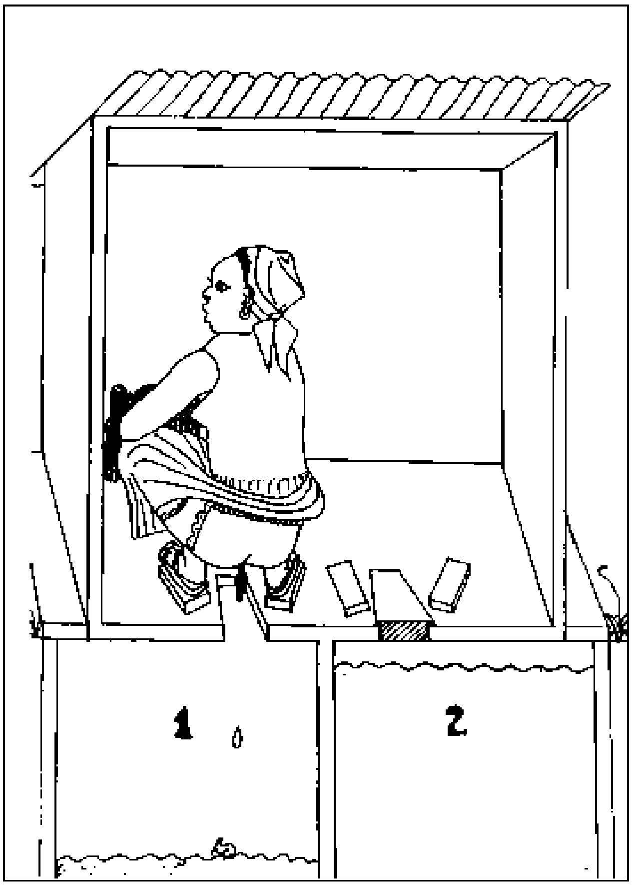
1
2

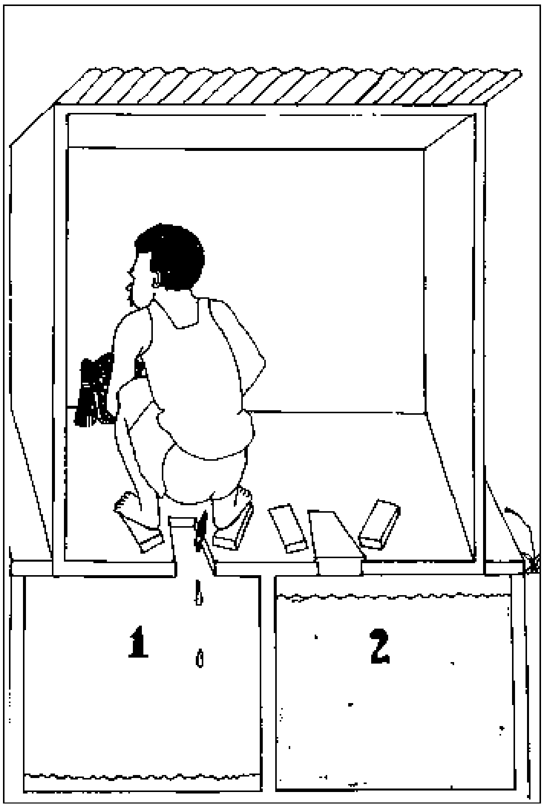

9.18. Latrine Follow-up

It is essential to follow up whether compost latrines are used correctly and, eventually, to advise and encourage the users.

A) Questions to the Users

The following questions need to be discussed with the owner/users.

No.	Question	Possible Suggestions
1	Do you have any problems with your compost latrine?	
2	How many people use the latrine?	
3	When did you start to use this pit?	
4	How full is it?	
5	Did you empty a pit already?	
6	Do you use sand and ashes?	It is preferable to use sand and ashes.
7	Do you regularly add grass, leaves, kitchen waste?	Adding these materials is necessary for better composting.
8	Is the container for ashes and sand filled regularly?	This is very necessary to encourage the users. Little children can be assigned for this task.
9	Do the users sprinkle sand and ashes?	Remind them if they forget.
10	Do you sweep the latrine daily?	This is very important for cleanliness
11	Do you use the broom somewhere else?	The broom shall not be used elsewhere because of transmission of diseases.
12	Are there many flies in the latrine?	Pour lot of sand and ashes. Keep the lid always closed.
13	Are there many flies in. your kitchen?	Keep your compound clean and dry. Bury or burn rubbish.
14	Are there many mosquitoes in your compound?	Your latrine pit must be dry. Your bathing place must be dry. Dig ditches for run-off of rain water. Fill up all water pools in the surrounding.
15	Is the run-off of the bathing place muddy and dirty	Dig a soak-away pit and fill it with stones or broken bricks.

B) Inspection

The following points need to be inspected.

No.	Check	Possible Help
1	Are the latrine surroundings clean?	Clean the surroundings.
2	Is the latrine clean inside?	Clean the latrine inside.
3	Is the latrine slab clean or is there urine spilled ("maps")?	Scratch off any dried dirt. Sprinkle ashes and sweep it into the pit. Rub the slab with wet grass. Do not rinse.
4	Is there a basket with sand and/or ashes, a tin, paper, a broom inside? Is there a wooden lid and a concrete lid on the two holes?	Replace what is missing.
5	Are all the leaflets and posters, "How to use the latrine", on the wall?	Replace what is missing.
6	Look into the pit with a torch. Is there water in the pit? Is everything well covered with sand or ashes?	Fill earth, sand, ashes, grass, leaves into the pit until all water is sucked up.
7	How full is the pit?	If the pit is almost full, the contents can be pushed back with a stick for even filling. Remind the owner to call the project when he wants to change the receptacle.
8	Is there any bad smell?	Put a lot of ashes into the pit to stop it.
9	Are there many flies?	Advise the owner on the correct use (to place the lid, etc.) which will reduce the flies.
10	Are the concrete covers of the emptying holes well covered with earth and air tight?	Cover the concrete covers with earth.
11	Is any place around the latrine and especially the steps washed out?	Fill any washed out place with earth.
12	Does the mosquito wire on top of the ventpipe have holes?	Replace it by new mosquito wire.

Do not forget to fill in the form, "LATRINE FOLLOW-UP" after each check and put it in the file of the latrine. This is necessary to see any improvement/deterioration and to evaluate by comparing with other latrines and over a certain period of time.

Sudan Council of Churches * Munuki Water and Sanitation Project

LATRINE FOLLOW-UP

Latrine No:..
Owner:..
Site:..

Number of follow-up visit...........

Check done by.................... Date:...

How many people use the latrine?	....
How full is the pit?	....
Is there water in the pit?	yes/no
Is the lid on top of the squatting hole?	yes/no
Are sand and ashes available?	yes/no
Are sand and ashes sprinkled?	yes/no
Are grass/leaves/kitchen waste/................./............. added	yes/no
Are there flies?	yes/no
Are there mosquitoes?	yes/no
Is there a bad smell?	yes/no
Are the covers for emptying well covered?	yes/no
Is the mosquito wire on the ventpipe all right?	yes/no
Has the second compartment been started? Date:	yes/no
Has the first compartment been emptied? Date:	yes/no
Were the contents decomposed properly?	yes/no
Is the latrine clean? very dirty 0 1 2 3 4 5 very clean	

Remarks:
....

....

....

....

....

....

....

....

9.19. Children's Squatting Slab

Children will learn after a certain age to imitate the adults when defaecating. However, because the squatting holes of the latrines are too big, they will not go there, but just squat anywhere, in or near the compound. Thereby, they will provide breeding places for flies and contribute to the transmission of diseases. This can be helped by taking the excrements of a child immediately and throwing them into the latrine. However, the children's squatting slab will provide an easier solution and can additionally help to introduce the child into using a latrine properly later on. It will also help to reduce the nuisance of smell and flies from the excreta of the children squatting just anywhere.

The children's squatting slab is a slab of 50 × 50 cm from concrete, reinforced with chicken wire with a small squatting hole in the middle. It has a wooden lid.

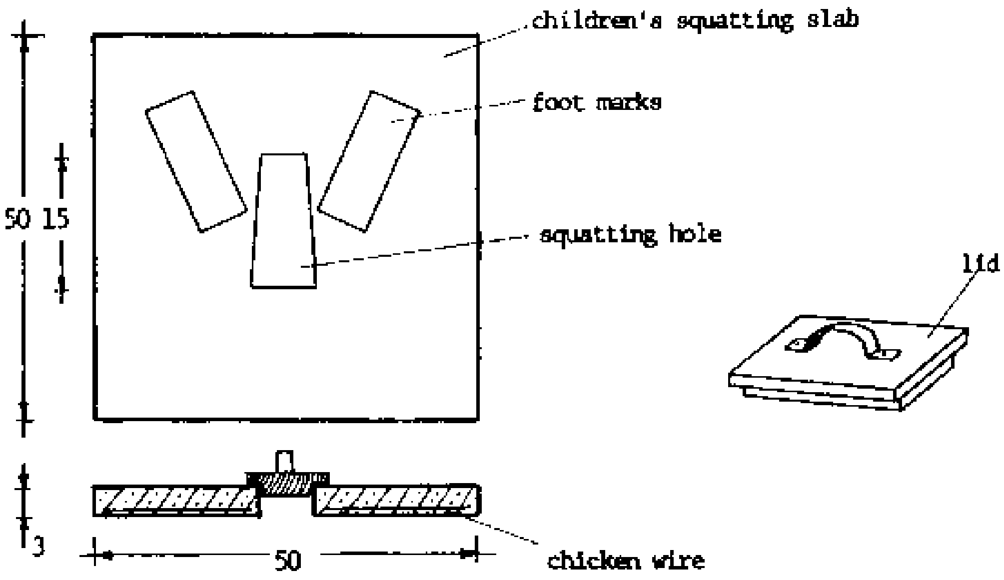

SCALE 1:10

It is to be used as follows:

1. Dig a pit a bit smaller than the slab so that the slab can rest on the edges of the hole. It should not be deeper than 50 cm and in a place which is not flooded by rains. Put the soil of the digging aside and partly around the edge of the pit, to raise it a bit above the normal ground

2. Place the slab and smear the edges with mud so that it is sitting firmly on the ground. Put the lid on the squatting hole.

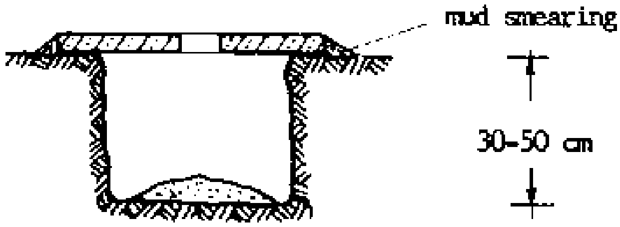

3. Teach the children to use the squatting hole properly, to put some sand or earth into the hole after defaecation and to replace the lid after finishing.

4. When the pit is full, take away the slab and put it on a new pit. Cover the old, full one with earth.

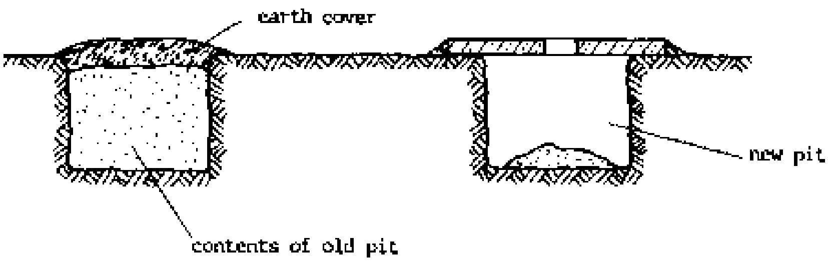

9.20. Bath and Soak-Away Pit

A place for taking a bath is essential for personal cleanliness and hygiene. It can be within the house with running water from a tap or a separate building, where we get water from an elevated tank, or just a place with a fence using water from a bucket. However, in any case it is important to keep it clean in order not to make it a breeding place for germs and let it become a smelly nuisance, especially if it is also used for urinating.

Therefore, take care that

- there is never standing water in the bathing place, but that it can run off easily;

- the water is not just running outside and then forming a cess-pool stinking in front of your fence;

- you clean the bath regularly with enough water and soap. Normally, there is no need for disinfectants like Dettol, Finik, etc., if you keep the place clean and dry. Disinfectants should be used only if there are fungi infecting the feet. Then disinfect the bathing place - using boiling water is as effective as any disinfectant. Do not forget to treat the disease, otherwise it will just spread again.

A latrine with bath and soak-away pit:

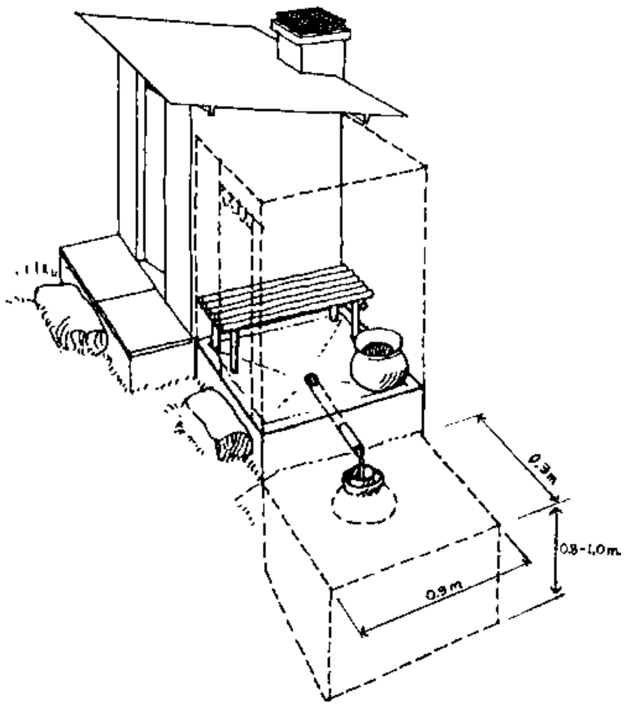

To prevent water from standing, care for proper drainage and a soak-away pit. A soak-away pit to last for many years and not be clogged by grease and silt and bacteria, must be built properly.

Cross-section through soak-away pit:

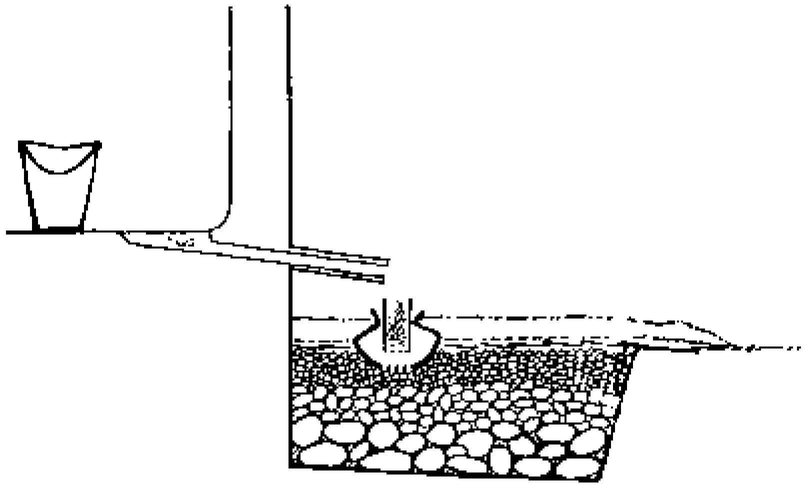

In order to build a proper soak-away pit, do as follows:

1. Choose the Proper Location

It should be at least 6 m distance from the house and 30 m from the nearest source of water supply. It should not be in an area where surface water will stand or flow over it sometimes. The soil should be neither pure sand nor pure clay.

2. Dig a Pit

The bottom of the pit should be at least 1 metre above the groundwater level in rainy season and 1 m above any impervious layers. The size should be about 1 m deep and 1 to 3 m diameter.

3. Fill the Pit

In the bottom third, big stones (about the size of a papaya), on top of that the next third, middle size stones (about as big as mangoes). The rest shall be filled with small stones or gravel; if available, you can put a layer of charcoal in between.

Soak-away pit with second layer of middle size stones:

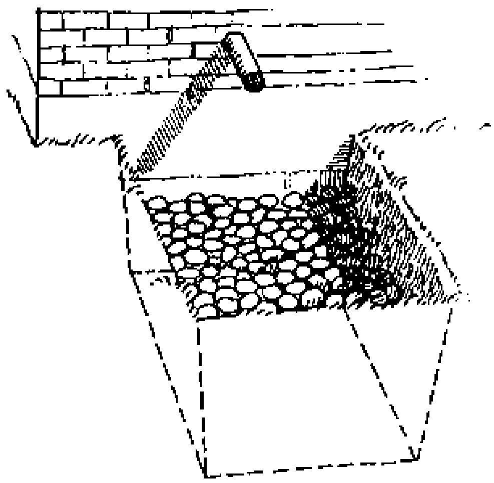

4. Prepare and Put a Silt and Grease Trap

Make holes into the bottom of a clay pot and a tin fitting into the mouth of the pot.

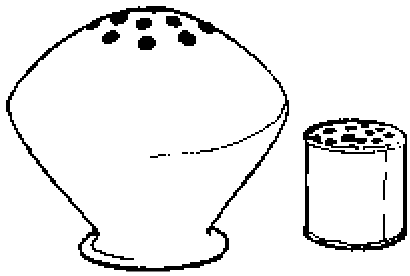

Fill the pot with grass or straw, but do not press it together. Put the tin into the mouth of the pot and fill it also with grass.

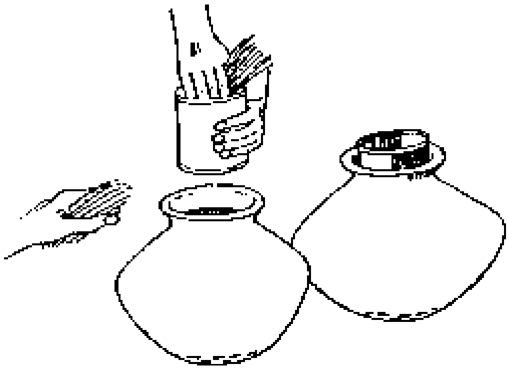

Put the pot with the tin into the layer of small stones under the outlet of the waste water.

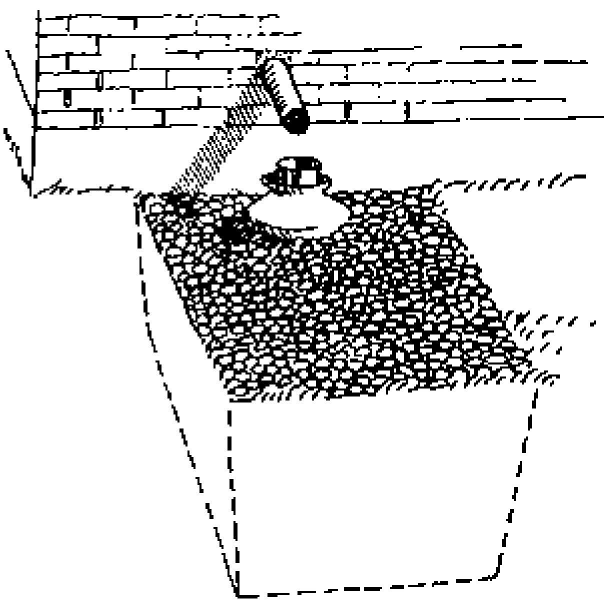

5. Cover the Pit with palm leaves and old sackcloths or mats, so that only the silt trap looks out. Cover the mats with 5 to 10 cm of earth.

For maintenance you have to change the grass in the pot every two weeks.

If the pit is not soaking anymore (after some years), take out everything, wash the stones, take away a layer of soil from the walls of the pit and let it dry out. Then start again at step No. 3 to re-do it.

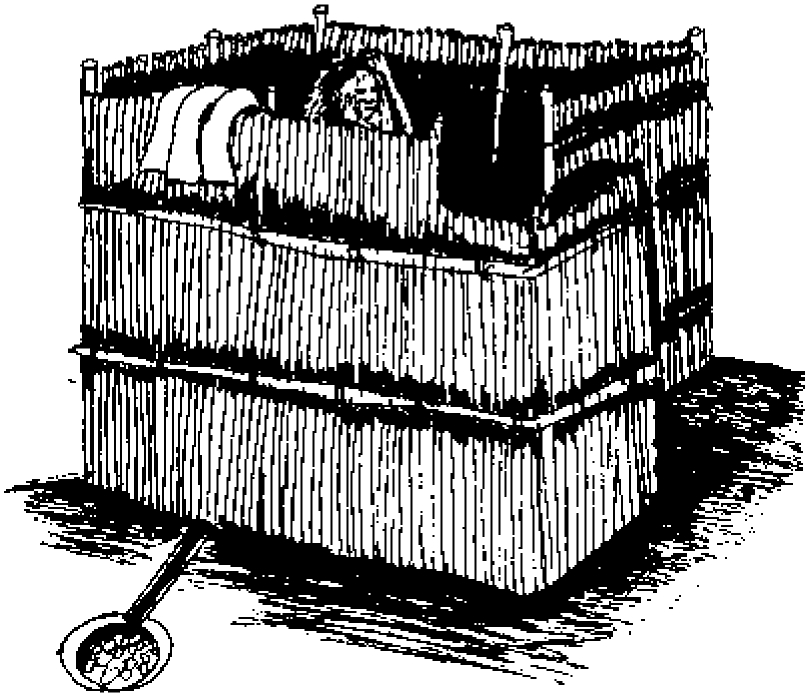

9.21. Handling Waste Matter in The Home

Beside excreta, there is other waste matter in the household which needs to be handled in a proper way to avoid diseases.

A) Principles

1. Minimize rubbish (e.g. by using a basket for shopping instead of buying new nylon bags each time).

2. Check to see if waste can be a resource by reusing/recycling it.

3. Whenever you are collecting, handling or disposing of waste, take care not to get injured (if you do, disinfect and clean immediately), and wash afterwards with soap and enough water.

B) What Can You Do with Waste Matter?

In crowded areas only a collection system could ensure safe disposal. However, if that is not available and we cannot re-use the waste safely, we should try to get rid of it in a safe way, that is:

1. Rubbish

Rubbish means all material which is not organic, like broken utensils, scraps of metal, glass, nylon bags, old batteries, rubber, etc.

If you collect rubbish in a waste-bin, do not mix it with garbage.

Always cover the bin not to allow rats, flies, etc. to live and breed in it.

Re-use it if it is possible in a safe way, e.g. use nylon bags several times after washing them, or re-use tins, but cut them open with a tin-opener to have a smooth edge and you will not cut yourself.

Bury it regularly in a suitable pit. The pit needs to be far enough from wells and streams to prevent water pollution. The bottom of the pit should be at least 1 m above the water table in rainy season.

The pit should also be far enough from houses to prevent nuisance by smell, flies, rats, etc.

Eventually burn the rubbish, but always cover it with soil.

2. Garbage and Other Organic Matter

Garbage means organic matter like food and crop waste, sweepings, kitchen leftovers, etc. Additionally, there is organic matter like small branches and leaves, animal manure, dead animals and ashes. Do not mix it with rubbish, but collect it separately. Re-use if possible and safe, e.g. kitchen leftovers as animal food. Recycle by using it for composting, either by throwing it into your compost latrine, or on a compost heap. A compost heap you can make by digging a pit, 1 m deep, throwing the waste in and covering it with earth immediately to prevent flies, rats, etc. It is very good if you can mix garbage, animal manure and ashes. This will give a very good manure for the garden.

Ashes you can also re-use for cleaning, for your pit latrine or compost latrine, or for making combo.

In case of bigger dead animals you have to bury them deep enough and cover them properly with soil to prevent them from being dug out again by dogs or hyenas.

3. Paper

Paper can be completely re-used if it is collected in a separate basket, either as scrap paper for drafts, for wrapping things, for the latrine or for lighting a fire.

4. Waste Water

Waste water can be re-used for

- cleaning,
- watering trees or the garden (if it is not too soapy).

If it is not re-used, it should be disposed of in a soak-away pit (see 9.20).

9.22. Pesticides

A) General Information

Pesticides are poisonous chemicals for killing "pests", that is insects, weeds, fungi, etc. They are designed for use in agriculture, disease control (mosquito control), timber protection, etc. Pesticides are advertised as offering a promise of a better life, easier and more comfortable, higher production and higher profits.

But

- they do not fulfill these promises, especially in the long run: Even if production increases, there is no guarantee that the poor will share the benefits. They will rather be the ones suffering most from the side effects.

  Costs are increasing and a crisis develops between worsening control of the pests and spiralling prices, and efficiency decreases.

- they have serious side effects, especially, if used uncontrolled.

The background for the uncontrolled use of pesticides in Sudan and other Third World countries shows a new dimension of underdevelopment: beside the economical exploitation there is an ecological exploitation. Chemicals whose production, marketing and use are forbidden in industrialised countries, because of its well-known dangers for the health of people and the environment, are produced, marketed and used in Third World countries. E.g. West Germany exports yearly 140,000 metric tons of chemicals whose use in Germany is either severely restricted or forbidden at all.

Annually there are about 500,000 poisonings' in connection with pesticides according to WHO and a high rate of unreported cases.

Poisonings happen because of misuse or overuse by

- poor training in the proper use and improper handling and use;
- irresponsible marketing practices;
- spraying on calendar schedule.

There is also a very low awareness about the dangers among the public. Pesticides are seen as "medicine" (almost in a magic sense) and not as the poisons they actually are.

The legislation in Third World countries is often not sufficient and, where it exists, problems arise because of inadequate enforcement.

See also 8.7/4.

B) Example DDT

DDT is a very good example for all the things described above:

DDT is one of the "Dirty Dozen", that is extremely hazardous pesticides which are banned or severely restricted in industrialized countries as threats to public health and environment, e.g. in Germany it has been forbidden since 1972. In Sudan its use was officially banned in 1980 according to some literature, but just to be replaced by other chemicals of similar kind or to be used inspite of the ban.

The chemical name of DDT is DichlorDiphenylTrichlorethane ($C_{14}H_9Cl_5$) Its use as an insecticide was detected in 1939.

It is so far prohibited in 15 countries because of its

- toxicity:

  This is increased by DDT being persistent and accumulating in body fat at each level of the food chain, and it is also increased in case of a protein deficient diet.

- residual action on humans, the wildlife and environment:

It concentrates in mothers' milk and in the fat tissue of the body. In Sudan it was used in the Gezira since 1947. The result is that in the fat of a Sudanese a residue content of an average of 30.9 ppm is found compared to a world level of 6 ppm.

Because DDT is essentially non-biodegradable in the environment, it is meanwhile present in virtually all foods and living things. The half-life of DDT in soil is a minimum of 2.5 years, that means that after 2.5 years half the amount originally applied will still be there, after five years a quarter, and so on. Its break-down products, DDD and DDE, are also extremely long lived and extremely toxic for fish and birds.

- alteration of the ecological balance:

DDT is lethal to many predators and parasites of the target pests. It also contributes to the deterioration of the soil quality because of destruction of micro-organisms, earthworms and ground insects. The World Bank, therefore, suggests it not to be used in agriculture.

- development of resistance:

It was originally thought of as a weapon against malaria. Meanwhile, 51 out of the 60 malaria-bearing mosquito types are resistant, and altogether there are more than 300 DDT-resistant pests now.

- health risk:

It is thought to be carcinogenic (= causing cancer). It also causes nerve and brain damage, as well as liver and kidney damage and tremors. There is also a decrease in sperm count reported which may be due to impurities of DDT.

C) Safety Precautions

For the use of DDT and other pesticides, the following safety precautions are necessary:

- Wear protective clothes which cover the whole body including a hat and veil covering the whole head, and long gloves.

- Wear special working clothes which are to be removed at the end of each working day.

- Wash the clothes and the body using soap at the end of work with sufficient water, using separate containers for cleaning which shall not be used for anything else. Dispose of the water in a safe way.

- Wear rubber boots.

- Handle the pesticide with special implements and not with the hands or containers used for other purposes.

- Secure safe transport and storage and proper equipment for application including spare parts and repair facilities.

It is quite clear that all these do not happen in practice for different reasons. However, the question to be asked is whether the use of pesticides is necessary and reasonable at all, and, if necessary, when and where to use them, or whether there are safer alternatives.

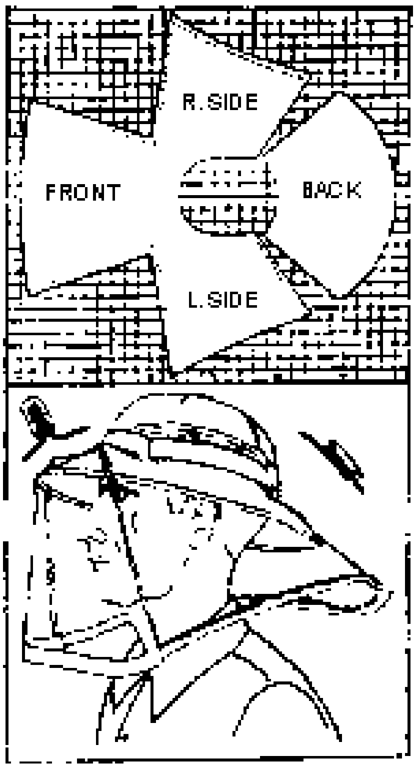

10. Appendix

10.1. List of Abbreviations

A/...	Assistant...
Adm.	Administration
BH	Borehole
ca.	circa = about
CD	Community Development
CDO	Community Development Officer
CL	Compost Latrine
c/o	care of
e.g.	exempli gratia = for example
etc.	et cetera = and so on
...f	... and the following page
...ff	... and the following pages
GW	Groundwater
HP	Hand Pump
ID	Inside Diameter
i.e.	id est = that is
L	Latrine
Log	Logistics
£S...m/ms	Sudanese Pounds... milliemes
OD	Outside Diameter
pc	Piece
pcs	Pieces
PMT	Project Management Team
San	Sanitation
SCC	Sudan Council of Churches
W	Well
WC	Water Closet
WS	Water Supply
WT	Water Table

Abbreviations for Measurements see 5.3
Abbreviations in Mathematics see 5.4 and 5.7

10.2 List of Forms

10.3 List of Leaflets and Posters

10.4. List of Illustrations (from literature)

References to illustrations page numbers and authors given in the table below reflect the printed version. In order to have the exact correspondence please consult the PDF version of this file.

All illustrations not mentioned in the following list as well as the adaptions were made by Márta Guóth-Gumberger.

Section	Illustration Page No.	Taken from/Made by
1	1.3/2; 1.6/6; 1.7/1	Ben Hakim
2	2.4/4; 2.7/2; 2.8/2; 2.12/1	Ben Hakim
	2.18/1-4; 2.18/6	bibliography No. 12; 27
3	3.1/2; 3.3/2; 3.6/1; 3.7/1; 3.8/1; 3.9/3	Ben Hakim
4	4.8/1-3; 4.19/3	Ben Hakim
	4.4/2; 4.8/5; 4.12/1f; 4.14/3-6; 4.18/4f	Mike Gogonya
	4.1/4	The Guardian Weekly
	4.6/1	The International Women's Tribune
	4.6/3 (below)	Sueddeutsche Zeitung
	4.6/3 (top); 4.8 (adapted); 4.12 (adapted); 4.14 (adapted); 4.16/2; 4.18 (adapted); 4.23/3 (below); 4.27 (partly adapted)	bibliography No. 20; 37; 48
6	6.4/8; 6.6/14	Ben Hakim
	6.3 (partly adapted)	catalogue 1986, Luna AB Sweden, and catalogue 1983, Mittermeyer, W-Germany
	6.1/20	manual diaphragm pump, Van Reekum Materials, Netherlands
	6.1/21	manual Hatz Generator, West Germany
	6.1/22 (bottom); 6.6/2 (adapted); 6.6/6; 6.7 (adapted)	bibliography No. 6a; 8; 44
7	7.2/2; 7.3/1; 7.6/3; 7.8/3; 7.12/3	Ben Hakim
8	8.7/5; 8.9/2; 8.37/7 (left); 8.39/3-7	Ben Hakim
	8.24/24 (adapted)	leaflet, Mono Pump
	8.24/29	leaflet, Homa Pump
	8.24/30	leaflet, Jet pump
	8.24/7-30 (partly adapted); 8.30 (adapted); 8.35 (adapted); 8.37/4,6	bibliography No. 18; 21; 22; 44; 46
	9.9/2; 9.19/2; 9.20/5; 9.21/2	Ben Hakim
	9.6/1,2(bottom), 3-10; 9.17/2-32	Mike Gogonya
	9.1/2; 9.2/2; 9.2/3; 9.6/2 (top),4 (bottom)	Stephen Hakim
9	9.3/1; 9.3/2; 9.3/5f; 9.5/2f (adapted); 9.6(adapted); 9.12/2; 9.12/3 (adapted); 9.12/4 (top, adapted); 9.20/1-4; 9.11/2; 9.22/3	bibliography No. 6; 23; 34; 48; 49
0 to 9	drawings title pages	Ben Hakim

10.5. Bibliography

Literature used and recommended for further studies:

1. A Growing Problem, by David Bull; OXFAM, 274 Banbury Road, Oxford OX 2 7 DZ, England

2. A Manual And Resource Book For Popular Participation Training, 4 Vol., UN-Publications ST/ESA/66 Vol. I-IV; UN Publications, 1211 Geneva, Switzerland

3. A Manual For Group Facilitators, by The Centre for Conflict Resolution; The Centre for Conflict Resolution, 731 State Street, Madison, Wisconsin 53703, USA

4. African Churches And People's Development, ccpd-document No. 4; WCC, P.O. Box 66, 1211 Geneva 20, Switzerland

5. Appropriate Building Materials, by Roland Stulz; SKAT, Varnbuelstr. 14, 9000 St. Gallen, Switzerland

6. Biology, by Soper/Smith; MacMillan Publishers

6a. Brickwork For Apprentices, by J.C. Hodge; Edward Arnold

7. Bridging The Gap, by Save The Children; Save the Children, 54 Wilton Road, Westport, Conn. 06880, USA

8. Building Science And Materials, by John Elliot; MacMillan Publishers

9. Communicable Diseases, by Eshuis/Manschot; AMREF, P.O. Box 30125, Nairobi, Kenya

10. Communication, by C.S. Deverell; Gee & Co. Publishers

11. Communication Skills For Rural Development, by McDonald/Hearle; Evans Brothers Limited

12. Communications Guide for Extension Workers, by RSCTU/UNICEF; UNICEF, Eastern Africa Regional Office, P.O. Box 44145, Nairobi, Kenya

13. Community Development Workers Training Series, 7 volumes, by UNICEF; address see 12.

14. Development/Seeds of Change, diverse issues; SID, Palazzo della Civilta del Lavoro, Roma 00144, Italy

15. Guidelines For Development, by CCIA; Christian Conference of Asia, 480 Lorong 2, Toa Payoh, Singapore 1231

16. Handbook For Development Workers Overseas, by Glynn Roberts; Returned Volonteer Action, 1 Amwell Street, London EC 1 R 1 UL, England

17. Hand Dug Wells And Their Construction, by Watts/Wood; ITDG Publications, 9 King Street, London WC 2 E 8 HN, England

18. Handpumps, by Eugene Mc Junkin; IRC, P.O. Box 5500, 2280 HM Rijswijk, Netherlands

19. Handpump Maintenance In The Context Of Community Well Projects, by Arnold Pacey; ITDG Publications, address see 17

20. Helping Health Workers Learn, by David Werner/Bill Bower; The Hesperian Foundation, P.O. Box 1692, Palo Alto, CA 94302, USA

21. How To Protect A Water Source And Why?, by Rogers/Kokole; OXFAM/UNHCR, South Sudan Water Team, Juba

22. India Mark II Handpump Installation Manual; Richardson & Cruddas, 23 Rajaji Salai, Madras 600001, India

23. Insecticides, by The Ross Institute; The Ross Institute, Keppel Street, London WC 1 E 7 HT, England

24. Learning From The Rural Poor, by Volken/Kumar/Kathathara; Indian Social Institute, Lodi Road, New Delhi 11003, India

25. Making The Links, Guidelines For Hygiene Education In Community Water Supply And Sanitation, by IRC; IRC, address see 18.

26. Maths For Living, by W.D. Wright; James Nisbet

27. Navamaga, Training Activities For Group Building, Health And Income Generation; Overseas Education Fund, 2101 L Street NW, Suite 916, Washington DC 20037, USA

28. Notes For Draughtsmen, by Neil Orton; Mac Donald

29. Ordinary Level Mathematics, by F.G.J. Norton; Heinemann

30. Organisational Techniques; Overseas Education Fund, address see 27.

31. People In Development, by John Staley; SEARCH, 256 First Block, Jayanagar, Bangalore 560011, India

32. People's Technologies and People's Participation, by Pascal de Pury; WCC, address see 4.

33. Sanitation And Disease, by Feachem/Bradley/Carelick/Mara; John Wiley

34. Sanitation Without Water, by Uno Wimblad/Wen Kilama; Mac Millan Publishers

35. Shallow Wells, by DHV; DHV Consulting Engineers, P.O. Box 85, Amersfoort, Netherlands

36. Small Excreta Disposal Systems, by Feachem/Cairncross; The Ross Institute, address see 23.

37. Teaching And Learning With Visual Aids; Educational Materials Unit, Program for International Training in Health, School of Medicine, University of North Carolina, Chapel Hill, North Carolina, USA

38. Technical Health Training Manual, 2 volumes; Peace Corps, Information Collection and Exchange, 806 Connecticut Avenue NW, Washington DC 20525, USA

39. The Expanded Programme On Immunization, Health Education Trainers' Manual For Extension Workers In Sudan; UNICEF, Juba, Sudan

40. The Programmer's Tool Kit; Overseas Education Fund, address see 27.

41. The Role And Training Of Development Activists, by Khamla Basin; FFHS/AD, FAO, 55 Max Mueller Marg, New Delhi 110003, India

42. Visual Aids; Peace Corps, address see 38.

43. WASH Technical Reports; WASH, 1611 N Kent Street, Room 1002, Arlington, VA 22209, USA

44. Water For The World Series; US-AID, Development Information Centre, Washington DC 20523, USA

45. Water Sources And Their Protection, by Rogers/Kokole; OXFAM/UNHCR, Southern Sudan Water Team, Juba

46. Waterlines, diverse issues; ITDG Publications, address see 17.

47. Well Construction, by Richard E. Brush; Peace Corps, address see 38.

48. Where There Is No Doctor, by David Werner; TALC, P.O. Box 49, St. Albans, Herts., AL 1 4 AX, England

49. World Bank Technical Papers And Technical Notes Series, Water Supply And Sanitation; The World Bank, 1818 H Street NW, Washington DC 20433, USA

Sudan Council of Churches * Munuki Water and Sanitation Project

Small Projects'

Training Manual

Volume II.

Water Supply

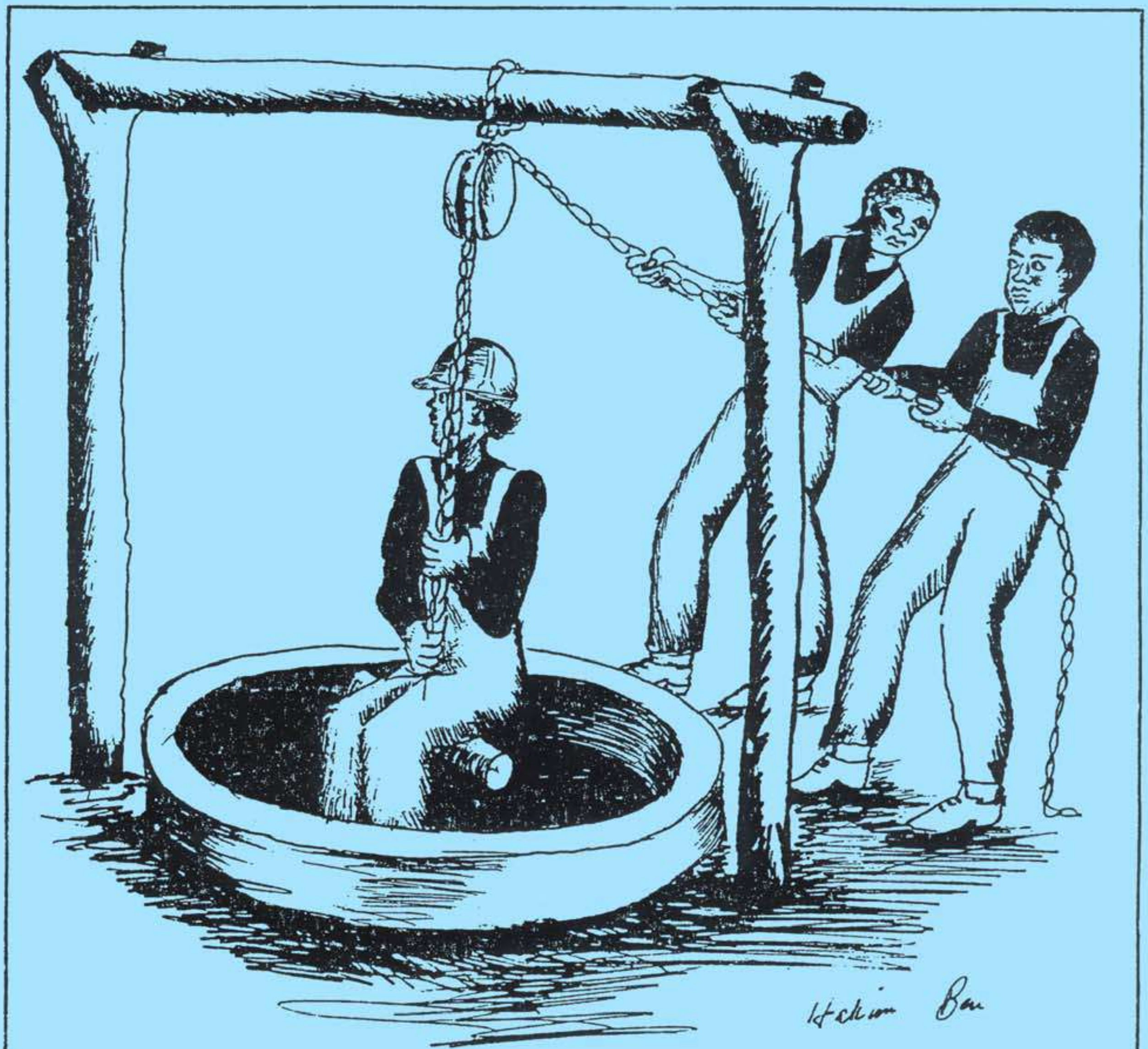

by

Márta and Rudi Guóth-Gumberger

1987

0. Introduction

TABLE OF CONTENTS

0.2 Foreword

Two people are named as authors of this training manual; however, in reality it is the result of the work of very many people. We hope that it will serve a great number of people as well.

The development of the manual has a long history. We had the opportunity to work with the Sudan Council of Churches from 1982 to 1987, first in the Integrated Rural Development Programme in Yirol, and then in the Munuki Water and Sanitation Project in Juba, both in Southern Sudan. We had been assigned as Water Supply Coordinator (Marta) and Community Development Coordinator (Rudi). In the beginning we had background knowledge but little field experience. So we started to learn with and from the people and from the literature. At the same time we started training the people with whom we worked. In the beginning the training was exclusively on site. However, in the second project, the training became more formalised into a full two years programme of both class and field work. We began from the actual level of knowledge of the trainees without the assumption that "one should know this or that", and gathered whatever knowledge was necessary to do the project work together. Soon, compiling and distributing of written material became necessary, and so this manual was begun.

It includes many of our experiences in the water and sanitation work during the last five years. The bulk of the information was ready in first draft in April 1987. Photocopies were distributed to the participants of a three months training course. Contributions and questions from the participants were invaluable, and many sections were revised/improved. Actually, the manual would have never been written without the eagerness of the Munuki project's staff to learn. This interest made learning and teaching very enjoyable. After the training course, the entire manual was revised further and finally completed to the present version.

We thank our colleagues in the Munuki Water and Sanitation Project for all we learned from them, for their good cooperation and for their contributions to the manual. They are:

Edward Lako, Arthur A.Columbano Lado, Rhoda Benjamin, Joseph Lado Lubajo, Joan Batul Eliaba, Simon John Lubang, Gloria Habakuk Soro, Paulino Onorato Legge, Prissy M. Wai Wai, Jackson Onan.

We also thank the course participants from Swedish Free Mission and Sudanaid for their contributions. They are:

Inga Andersson, Margaret Toya, Isaac Kajokole Kenyi, James Jamil, James Wani, Lona Kojo Michael, Julius Sebit, Erasto Tupa, George Mogga Wani, Elijah Biar, Rose Paul, Robert Otik, Rhoda Yangi Wesley, Quintino Pitya, Anna Itto Njimirano, Ben Juma.

We extend our thanks also to Tom Benton, Sr. Margaret Donohue RSM, Paul McGleenan, Paul Hiebert, Char Holcomb, Stephen Power SJ, Dr. Douglas Reitsma, Susan Sunflower, Dr. Ruth Goehle, Betsy Bascom, for the tiresome work of proofreading.

We thank Mike Gogonya, Hakim Benjamin and Stephen Hakim for many of the drawings.

We are also very grateful to Michael Kubrom Habtai who shared his office with us during the weeks of final revision and typing, made the SCC library available for us and encouraged us with practical help and supporting words.

We thank the Sudan Council of Churches, and especially the Deputy General Secretary, KostiManibe, for the generous support which made this manual possible, by providing working facilities, financial resources, an electronic typewriter and numerous other resources.

There are many other individuals whom we would like to thank for their helpful contributions, but who are too numerous to be named.

We apologise for mistakes which remain in the manual inspite of revisions and corrections, and kindly ask the readers to send any corrections, comments and suggestions about the manual to one of the following two addresses:

Márta Guóth-Gumberger, Rudolf Gumberger
Neue Heimat 5a
D-83024 Rosenheim
Germany
Tel.: 08031/81103
Fax: 08031/43695

Munuki Water and Sanitation Project
Sudan Council of Churches
P.O. Box 469
Khartoum
Sudan

For further copies of the manual please contact:

Publicity Office
Sudan Council of Churches
P.O.Box 469
Khartoum
Sudan

As this work would never have been possible by our own strength without God's help, so we hope that God will also protect and strengthen any persons who use this manual and any future work done with the help of this manual.

Knartoum, 11.11.1987
Márta and Rudi Guóth-Gumberger

0.3 Purpose of the Manual

The following introduction should help the reader to orientate her/himself to the manual and make best use of it.

According to the title, this manual is intended for small development projects with 20 to 40 staff members. The administrative and organisational structures described correspond to this project size.

Secondly, this book is a training manual. It does not intend to present all the information available for professionals about a covered topic, but rather to select the most basic and relevant information about a topic. Then it arranges and presents it in such a way as to introduce a beginner, but also that a trained staff can find it helpful. The manual will help senior staff to organise and improve their management.

The aim of this manual is to train senior secondary school leavers to become skilled technicians in water supply and sanitation work, to run a store, to keep records and do qualified field work, or to become community development officers. They should be able to lead a team later on and to do basic work in administration.

However, the manual can serve different purposes as described below:

1. Training:

- It can be used by the trainee for self-study or as complementary material to the teaching in class.

- It can be used by the teacher/instructor as a guideline for preparing lessons in class about the covered topics.

- Some parts can be used as guideline for technical training for illiterate people.

- Some parts can be used as guideline for training sessions in the community.

2. Guideline:

- It can be used by experienced people as a help to develop and build up a new small project.

3. Reference book:

- It can be used as reference in day-to-day project work in the different covered fields.

- It can be used by the trainee for looking up particular information after the course.

- It can be used for revising previously acquired knowledge.

0.4 Possible Readers of the Manual

The manual provides material for a two years training course for several (technical) areas with 25% training in class and 75% training in the field. It is expected that not everything in the manual is for every trainee or reader.

The manual was developed in a water and sanitation project. Therefore, major parts deal with these subjects. However, many parts are of a more general nature so that they might be useful for staff of other projects, for churches, communities and development organisations.

In detail, material from the manual might be useful for the following groups of staff:

No	Staff or Trainees	Relevant Sections	Relevant Chapters
1	senior staff in management functions	1,2,3,7	4.18; 4.21; 5.1; 5.2;8.11 8.29; 9.8
2	administrative staff, typist	1,2	5.1; 5.2; 5.8
3	bookkeeper	1,5	2.9-18; 3.3-4; 7.2-12
4	community development staff	1,4,9	2.7; 2.11-12; 2.18; 3.1; 3.2; 3.11-13; 5.1-2; 5.8 7.1; 7.6; 8.1-11; 8.29; 8.33; 8.36-39
5	water supply staff	1,5,6,7,8,9	2.11-15; 2.18; 3,1-2; 3.11-13; 4,1-2; 4,15-16;
6	other technical staff like building staff	1,3,5,6,7	
7	storekeeper	1,5,6,7	8.32
8	logistics staff	1,3,5,7	2.18; 6,3-5
9	driver	1,3,5	2.18; 6,3-5; 7.6

0.5 Summary of the Contents

The manual consists of nine sections, compiled in three volumes:

Volume I	1.	General Knowledge
ADMINISTRATION	2.	Administration
and	3.	Running a Vehicle
COMMUNITY DEVELOPMENT	4.	Community Development
Volume II	5.	Mathematics
WATER SUPPLY	6.	Basic Technical Knowledge
	7.	Building Administration
	8.	Water Supply
Volume III	9.	Sanitation
SANITATION		

Volume I contains the general parts combined with community development, volume II and III contain the technical parts.

The manual was divided into three volumes so that it can be used in parts and become more handy for the reader. Sanitation was taken as a separate volume, because many may be interested in this section alone. Still, the manual is one work and the different sections belong together. There are many references pointing to other chapters in a different volume.

The different sections are briefly introduced in the following:

1. <u>General Knowledge</u>

Relevant information not fitting into the other sections was compiled here. “Using a Dictionary”, “Reading Techniques” and “Study Techniques” are useful for the work with the manual. “Private Budgeting”, “First Aid” and “Applications” are also generally needed knowledge.

2. <u>Administration</u>

The basic administrative knowledge and procedures for a small project of 20 to 40 staff members are compiled here.

3. <u>Running a Vehicle</u>

Here everything which a responsible user of a vehicle - not a mechanic! - has to know in order to run the vehicle economically and to prevent unnecessary damages is compiled. The section is important for both senior staff or logistics staff and drivers.

4. <u>Community Development</u>

This section compiles basic information necessary for community development work, both of general nature and background information as well as practical procedures.

5. <u>Mathematics</u>

The manual is not intended to be a mathematics book. Therefore, you cannot find detailed explanations of mathematical principles. Rather you will find a collection of mathematical knowledge in recipe-style about whatever was found necessary for the project work - mostly very simple things and few more sophisticated.

6. <u>Basic Technical Knowledge</u>

Basic technical knowledge for the water supply and sanitation work is compiled here, “Basic

Technical Drawing", "Using Measuring Tools", "Tools", and "Cement and Concrete" being the most important ones to be studied first.

7. Building Administration

The specific administration necessary for construction work is described her, consisting of "Planning", "Record Keeping", "Cost Calculation", "Purchasing" and "Storekeeping".

8. Water Supply

The section about water supply starts with general knowledge about water, discusses the different well types, the selection of a well site. Construction of hand dug wells with concrete rings is described in detail. An overview about pump types is given; some of them are described in more detail, especially hand pumps, and basic plumbing is added. "Well Disinfection", "Water Treatment" and "Health Education" are discussed in the end.

Hand dug wells and hand pumps were deliberately selected as main topics to be covered. Other books (see bibliography No.17, 18,35) cover these topics much more comprehensively; however, here the emphasis was to prepare training material in easily understood overviews and step-by-step procedures.

9. Sanitation

This section starts with general background knowledge about sanitation. The different types of disposal systems are introduced and guidelines for selecting the suitable latrine suggested. Deliberately, only sanitation systems without water were selected to be covered. Several are described in more detail. The main emphasis lies on compost latrines, including different designs, composting process, construction, operation and maintenance, and follow-up. Chapters about children's squatting slab, bath, waste matter and pesticides complete the section. Many parts of this section are suitable for training sessions about sanitation in the community or in schools.

0.6 Format and Style of the Manual

As the purpose of the manual is to assist trainees, teachers and field staff, we put emphasis on giving it a consistent and easily understandable format. The colleagues in the project work found that providing structures was helpful, and they had no difficulties at all filling the structures with life and flesh. Therefore, the manual offers a lot of structures, forms, tables, boxes, and step-by-step procedures. This shall help to gain an overview about the field and to easily find the required information.

A) Format of the Manual

The page numbers on top of each page reflect the format of the manual. Each one of the nine main sections contains several chapters. Each chapter has one or more pages.

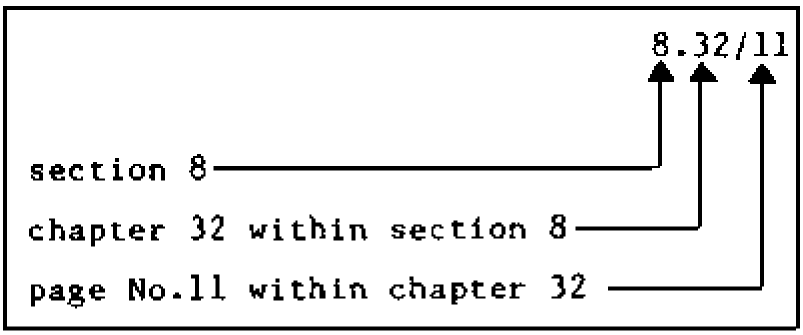

The introduction with foreword, etc., is added as another section 0. The appendix with bibliography, index, etc., is added as section 10. Section 0 and 10 are attached to all three volumes to help the reader use the manual. Thus, the volumes contain these sections:

Volume I	: sections 0,**1,2,3,4,**10
Volume II	: sections 0,**5,6,7,8,**10
Volume III	: sections 0,**9,**10

Consecutive page numbers at the bottom of each page run in each volume separately.

Each chapter starts on a new page. Both the title of the section and the chapter are named:

8. Water Supply

8.14 **BASIC PLUMBING**

Directly under this headline you will find one or several bible quotations in some chapters. These were used for the prayer fellowships which were an integrated part of the three months course, and are related to the topic where they are mentioned.

Usually, each chapter starts with a brief introduction as each chapter is an entity by itself and should be readable by itself. The material within one chapter is mostly structured according to the same system, for example, in the lesson “Basic Plumbing”:

A) Threads

1. Thread Types

    a) Internal/External Threads
    b) Right Hand/Left Hand Threads
    c) ....
    d) ....
    e) ....
    f) ....

2. Thread Standards for Bolts and Nuts

    a) Metric Coarse Threads M
    b) ....
    c) ....
    ....

3. Thread Standards for Pipes

    a) ....
    b) ....
    ....

4. Pipe Measurements

B) Basic Operations of Plumbing

1. Cutting with a Hacksaw
2. Pipe Cutting
3. ....

C) Pipe Joints

1. ....
2. ....
....

Most lessons have only a structure A, B, C, ... and 1., 2., 3., ... All titles are capitalised and underlined, as well as other important words within the text. All important messages are put into boxes. Step-by-step procedures are either numbered or put into a box with a separate column giving the reasons. All tables are in boxes.

As each chapter is a separate entity and can be used as a teaching unit, a continuous flow between the chapters is not maintained. Repetitions occur sometimes, otherwise, a reference refers to the relevant chapter containing more information about a certain point.

B) Language of the Manual

The manual deliberately uses simple English to explain a topic, to give trainees with limited English knowledge a chance. Simple sentence constructions were preferred to elegance of style. Some special vocabulary in the different topics was introduced, but always with explanations. Often another equivalent word is given in brackets, e.g.
"serrated (= toothed)",
"aquifer (= water-bearing layer)"

As the book is a training manual, no foot-noting was applied. We used drawings and information from books together with project experience and compiled them for the teaching purpose. The literature used and useful for further readings is compiled in the bibliography.

C) Drawings

Many drawings are added for illustration and easy reading. In the technical part, mostly proper technical drawings are used (such as cross-section, layout plan, etc.), because they convey the information in a more correct and complete way than other types of drawings. The reader/trainee not acquainted with technical drawings must study chapter 6.1 "Basic Technical Drawing" before reading. Experience showed that the trainees without previous technical training were soon able to read technical drawings. The drawings in the manual shall also give the trainee practice in reading technical drawings. Almost all drawings are placed below or beside the relevant text, although this way consumed more space. This shall ease the reading as well.

0.7 Instructions on how to Use the Manual

As not everything in the manual is useful for each reader, you need to pick what is interesting for you. Selection should be easy because of the provided structures. The following can help you to make full use of the manual:

1. Do not attempt to read the manual from the first to the last page like a novel.

2. Make yourself acquainted with the format and the paging of the manual (see 0.6).

3. Cut separation taps from carton paper for the different sections and glue and staple them to the title page of each section.

4. Use the SQ3R-method explained in 1.3 to read the manual.

5. Read the table of contents and mark which chapters are interesting for you.

6. Decide which chapters to read first. Chapters 1.2, 1.3, 1.4, 5.1, 5.2, provide necessary basics for further reading of the manual; for technical staff also 5.3, 5.4, 6.1.

7. Apply the SQ3R-method for each chapter as well. Read the headlines of the chapter first to get an overview, collect your questions about the material, etc.

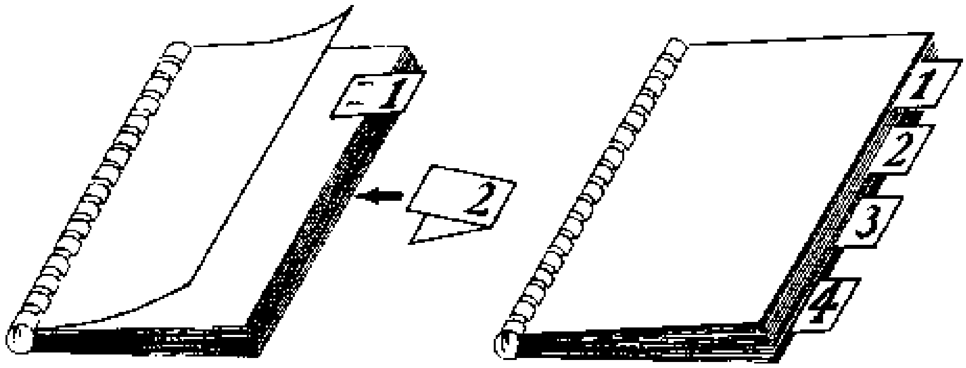

8. Underline important key-words; write your notes, remarks and questions into the manual wherever needed.

9. Use the list of abbreviations, list of forms used, list of leaflets and posters, in the end of each volume.

10. Use the index in the end of each volume to quickly find information about a certain point.

11. Use the bibliography for further studies.

0.8 Instructions how to Teach with the Manual

There are many books about how to teach, and teaching methods are not the topic of this manual. Thus, only a few suggestions are compiled in the following on how to teach with this manual (see also 4.14; 4.24).

A) <u>General Learning Conditions</u>

Help obtain good learning conditions:

1. Take special care that the class becomes a community, that the trainees get to know and respect each other, that they can mutually help each other. Fruitful learning can only take place in an atmosphere of cooperation.

2. Believe that the trainees are capable of learning. Trust is essential for encouragement and learning.

3. Take special care that the physical situation is supportive for learning: an adequate room, water, feeding, sanitation must be available. Involve the trainees by distributing assignments (fetching water, cleaning, organising food, etc.).

4. Take care that the trainees have sufficient materials like files, paper, pens, etc.

5. Arrange the class in the classroom in a circle whenever possible. This is the case for most of the chapters in this manual, except for the ones involving calculations.

B) <u>Planning Lessons</u>

Good preparation is essential for good teaching:

1. Take time for preparing your lessons. Roughly estimate as much time for preparation as for class time.

2. Plan the syllabus before a training course.

3. Each chapter in this manual is an entity by itself and can be used as guideline for a lesson. Some chapters may take several lessons to cover. Roughly, maximum five pages can be covered in a teaching unit of two hours.

4. Plan extra lessons in the beginning of the course just for explaining the syllabus and the format of the manual.

5. Plan enough time for evaluation.

6. When planning your lessons, mix the teaching methods: mix group-work with class discussions, calculations with explanations on a model, etc.

7. Have your teaching material (models, posters, etc.) ready before the lesson.

C) <u>Teaching Methods in Class</u>

A variety of teaching methods is suitable for teaching with this manual in class:

1. You can structure many lessons according to the SQ3R-method (see 1.3):

   S = Survey: Explain at the beginning what the lesson will cover.

   Q = Question: Ask the trainees if they have questions about the topic and note these down. Check after the lesson if the questions were answered.

   R = Read: Conduct the lesson. Explain the material.

   R = Recite: Let trainees repeat and explain with their own words what they have learnt and understood.

   R = Revise: Give homework, revise the following day or after one week.

2. Use group-work. Let groups of 4 to 5 discuss a certain question, try to read a passage or a drawing of the manual together, collect different aspects of a topic, etc.

3. Use discussion in the whole class to summarize group-work, to intro duce something new, to explain an aspect relevant to all.

4. Use from time to time work on a certain assignment for each trainee alone (e.g. calculations).

5. Use role plays whenever possible (e.g first aid, interaction of technicians with the community, etc.). They are fun and very educative.

6. Teach by action whenever possible (e.g. cleaning and rehabilitating a latrine, safety measures, interview, etc.).

7. Include field visits into your training programme.

8. Use posters, models, actual examples, whenever possible. Many of the drawings in the manual can be drawn on big posters for use in class. Well construction work is best understood when demonstrated with small models. Bring pieces of material for everything you discuss in class.

D) <u>Questions</u>

Asking questions is a way to learn, for both the teacher and the trainee.

1. Encourage the trainees to ask questions.

2. Ask at the end of a lesson whether there are any questions.

3. Ask in the beginning of a lesson if questions remain from the day before.

4. If you cannot answer a question, do not pretend and dodge around. Admit it, look it up after the lesson, and answer it the next day.

5. Spend some time before and after the lesson in class to give the trainees a chance to ask.

E) Homework

Study on her/his own is essential for the trainee in order to be able to digest the material learnt.

1. Give homework to almost all of your lessons.

2. Encourage students to keep their homework well filed and organised with chapter numbers and headlines.

3. Ask trainees from time to time to prepare for a lesson on their own by studying the manual in advance.

4. Take time to correct the homework and return it as soon as possible.

F) Teaching Field Work

Some extra efforts in teaching field work will improve the results considerably.

1. Before you do a new type of work the first time in the field (like lowering concrete rings into a well), discuss the step-by-step procedures in detail in class. Use a model to illustrate the steps. This will help the trainees to keep an overview of the work. It will also help them see themselves as a part of the whole team and process rather than individuals doing just menial work. Discussion beforehand in class is better than trying to explain on the spot in the hot sun when half of the staff cannot hear you.

2. Sit down in the shade with the staff after having completed a new job or after something has gone wrong. Evaluate what happened by asking: What did you learn? What was new? What went wrong? What could be done better?, etc. (see also 2.7). This can help a lot how to judge the situation and how to improve techniques.

3. The same methods can be applied when teaching field work to illiterate people. Using models is even more important.

5. Mathematics

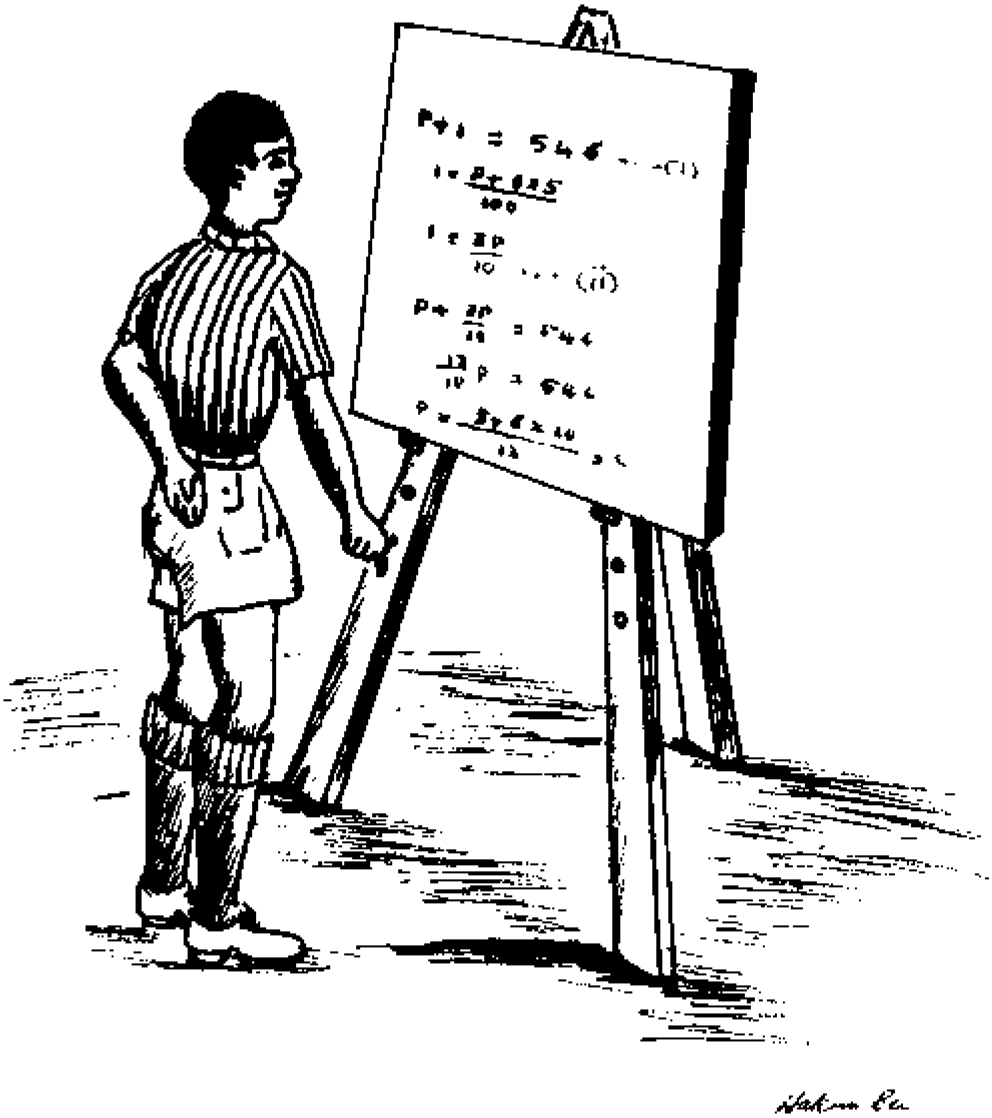

5.1 Basic Calculations

The most basic rules for calculations are compiled here for the everyday project work.

A) <u>Decimals</u>

Money, measurements (not time!) are expressed in decimals. All the figures to the left of the decimal point are whole numbers - units, tens, hundreds, thousands etc. All those to the right are fractional parts - tenths, hundredths, thousandths etc.

whole numbers: thousands, hundreds, tens, units
decimal fractions: tenths, hundredths, thousandths

$$9432.127 = (9\times1000)+(4\times100)+(3\times10)+(2\times1)+\frac{1}{10}+\frac{2}{100}+\frac{7}{1000}$$

No matter how many figures come after the decimal point, they amount to less than one unit. 0.78925 is <u>less</u> than one.

The figures to the right of the decimal point are called "decimal places". For example, 4.06 has 2 decimal places.

B) <u>Addition and Subtraction of Decimals</u>

Adding and subtracting decimals is just the same as adding and subtracting whole numbers.

- The sums must be set down in an orderly way.

- Keep the units, tens, hundreds, etc., in their correct columns.

- Keep the tenths, hundredths, thousandths, etc., in their correct columns.

- Keep the decimal points in a vertical straight line.

- A whole number like 15 may be written 15.00 to keep it more easily in the correct columns. Putting the decimal point and adding a convenient number of zeros (= noughts = 0) after it does not alter the amount.

- Start the work on the column farthest to the right of the decimal point. Carry tens in the ordinary way, as if the decimal point was not there.

- Put the decimal point in the answer under the decimal points above.

- Using checkered paper can help to avoid mistakes.

<u>Example:</u>

```
Addition          Subtraction
   6.8              613.090
   4.54            - 23.418
  15.00            --------
    .38             589.672
 ------             =======
  26.72
 ======
```

C) <u>Multiplication and Division of Decimals</u>

The most frequent cause of mistakes in multiplication and division of decimals is putting the point in the wrong place. There are simple rules for placing the point correctly.

1. Multiplication of Decimals by 10, 100, 1000, etc.

- To multiply a decimal number by 10, simply move the point one place to the right.
- To multiply by 100, move the point two places to the right.
- To multiply by 1000, move the point three places to the right.
- Add extra zeros (= noughts), if necessary.

Examples:

$4 \times 10 = 4.0 \times 10 = 40$

$6.7 \times 100 = 6.70 \times 100 = 670$

$4.329 \times 10 = 43.29$

$4.329 \times 100 = 432.9$

The decimal point is moved one place right for each zero in the multiplier, e.g. to multiply by $\underbrace{10{,}000}_{\text{4 zeros}}$ you move the decimal point 4 places.

$8.25346 \times 10{,}000 = 82534.6$

2. Division of a Decimal by 10, 100, 1000, etc.

- To divide a decimal number by 10, move the point one place to the left.
- To divide by 100, move the point two places to the left.
- To divide by 1000, move the point three places to the left.
- Add extra zeros (= noughts),if necessary.

Examples:

$200 \div 10 = 200.0 \div 10 = 20$

$27.6 \div 10 = 2.76$

$27.6 \div 100 = 0.276$

$0.48 \div 100 = 000.48 \div 100 = 0.0048$

The decimal point is moved one place left for each zero in the divisor:

$$43{,}597.65 \div \underbrace{10{,}000}_{\text{4 zeros}} = 4.359765$$

3. Multiplication of a Decimal with a Whole Number

- Work like for ordinary multiplication sum.

- Start at the far right of the decimal point.

- Keep the figures and the decimal points in their correct columns.

- Check that you have the same number of decimal places in the answer as you have in the numbers you are multiplying.

Example:

Multiply 468.25 by 3

```
 468.25
      3
1404.75
```

4. Multiplication of a Decimal Number by Another Decimal Number

- Ignore the decimal points while you multiply.
- Count how many decimal places there are altogether in the two numbers you have multiplied.
- Count that number of places from the right in the answer, and put in the point.

Example:

Multiply $2.\underbrace{45}_{\text{2 places}}$ by $3.\underbrace{6}_{\text{1 place}}$

altogether there are 3 decimal places

```
 245
  36
7350
1470
8820
```

$8\underbrace{820}$

3 decimal places in the answer

5. Division of a Decimal Number by a Whole Number

- Work like for an ordinary division.
- Keep the figures and the decimal points in their correct columns.
- Extra zeros may be added after the decimal figures of the dividend.
- You will sometimes be able to get an exact answer, but sometimes you may only work to two or three decimal places.

Example:

Divide 26.1 (= dividend) by 6 (= divisor)

```
    04.35
6 | 26.10
    24
     21
     18
      30
```

6. Division of a Decimal Number by a Decimal Number

- First turn the divisor into a whole number by moving the decimal point the necessary number of places to the right.

- Move the decimal point of the dividend the same number of places in the same direction. (If you multiply the dividend and the divisor by the same amount, the answer will still be the same:

Example: $\frac{30}{10} = \frac{300}{100} = 3$)

- Then work out the division in the ordinary way.

<u>Example:</u>

Divide 2.367 (= dividend) by 0.46 (= divisor)

```
2.367 becomes 236.7 ]both have been        (or 2.367 = 236.7 )
0.46  becomes  46   ]multiplied by 100         0.46    46

          5.145
46   | 236.700
       230
         6.7
         4.6
         2.10
         1.84
          .260
          .230
          .030
          ....
```

D) <u>Rounding Up and Down</u>

When looking for the nearest whole number:

- Ignore anything less than half.
- Count half or more as another whole number.

<u>Examples:</u>

357.1 → 357
357.4 → 357
357.5 → 358
357.9 → 358

When looking for a certain number of decimal places:

- Look at the following decimal place.
- If the last figure is less than 5, ignore it.
- If it is 5 or more, add 1 to the previous figure.

<u>Examples:</u>

4.213 → 4.21
4.214 → 4.21

4.215 → 4.2 2
4.219 → 4.2 2
4.295 → 4.3 0

E) Avoiding Mistakes

Keep to the following discipline to avoid mistakes:

- Always use enough space for calculations. Squeezing them onto a small piece of paper leads to mistakes.

- Always write clearly.

- Calculate each addition and subtraction twice before you proceed to use the answer. This will help avoid wasting time searching for mistakes later on.

- Don't let yourself get a ridiculous answer! Before you work out a problem in detail, you can make a rough estimate of what the answer should be. If your answer is very different, you will know you have made a mistake. A rough estimate is not a guess. You simplify the figures so that you know the answer cannot be more than a certain amount, or less than a certain amount. Therefore, the right answer must lie between them.

Examples:

2.73 x 15 = ?

$$\left.\begin{array}{l} 2 \times 15 = 30 \\ 3 \times 15 = 45 \end{array}\right] \text{The answer must be between 30 and 45.}$$

2.73 x 15 = 40.95

5.2 Percent Calculations

"Per cent" (= %) means "out of each hundred".
" % " can be replaced by " $\times \frac{1}{100}$ " or by " × 0.01 ".

The percentage is a certain part of a whole. % indicates the proportion of the part to the whole. For comparison 100 is used as a convenient standard.

Example:

$$5\% = 5 \times \frac{1}{100} = \frac{5}{100} = \frac{1}{20} = 0.05; \text{ or conversion back:}$$

$$\frac{1}{20} = 0.05 = 0.05 \times 100\% = 5\%$$

A) Equivalents

The size of each part of a whole can be expressed in four different ways. Watch out for these equivalents:

No.	Expression	Conversion
1.	in words	
2.	as a fraction	fraction × 100 → %
3.	as a decimal	decimal × 100 → %

4.	as a percentage of the whole	% ÷ 100 → fraction or decimal

Parts of a whole

in words	fraction	decimal	percentage	drawing
the whole	1	1.00	$\frac{100}{100}$ = 100%	
three quarter	$\frac{3}{4}$	0.75	$\frac{75}{100}$ = 75%	
one half	$\frac{1}{2}$	0.50	$\frac{50}{100}$ = 50%	
a third	$\frac{1}{3}$	0.33	$\frac{33}{100}$ = 33%	
a quarter	$\frac{1}{4}$	0.25	$\frac{25}{100}$ = 25%	
a fifth	$\frac{1}{5}$	0.20	$\frac{20}{100}$ = 20%	
a tenths	$\frac{1}{10}$	0.10	$\frac{10}{100}$ = 10%	
a twentieth	$\frac{1}{20}$	0.05	$\frac{5}{100}$ = 5%	
a hundredth	$\frac{1}{100}$	0.01	$\frac{1}{100}$ = 1%	

B) <u>Basic Operations</u>

There are two basic operations:

<u>1. Operation</u>

Calculate a certain percentage of a given number (= whole).

> To find the percentage of a given number, write the percentage as a fraction (with the denominator 100) and multiply it by the number. Simplify by cancelling, if possible.
>
> $$\text{part} = \frac{\text{percentage}}{100} \times \text{whole}$$

<u>Example 1:</u>

Your salary of £S 120.000 shall be raised by 157% at the beginning of the year. What will be your new salary?

given:	salary £S 120 = 100% (= whole)
asked:	15% of £S 120 =? (= part)
15% of £S 120	$= \frac{15}{100} \times £S\ 120 = £S\ 18$
old salary	£S 120
15% increase	<u>£S 18</u>
new salary	<u>£S 138</u>

Example 2:

The costs estimated for a double compost latrine of a school are £S 9500. 5% shall be added for supervision and depreciation of equipment. How much will be the total costs?

given: building costs £S 9500 = 100% (= whole) asked: 5% of £S 9500 =? (= part)

5% of £S 9500 $= \frac{5}{100} \times £S\,9500 = £S\ 475$

building costs	£S 9500
5% supervision	£S 475
total costs	£S 9975

2. Operation

Calculate what percentage one number (=part) is of another number (=whole).

In order to find what percentage one number (= part) is of another number (= whole), we divide the part by the whole and multiply by 100. Thus you obtain a result in %.

$$\text{percentage of a part of a whole} = \frac{\text{part}}{\text{whole}} \times 100$$

Example 1:

During one month the project car was driven 255 km for CD-department, 510 km for WS-department and 315 km for Administration, total 1080 km. How many % did each department drive?

given:	total 1080 km	= 100% (= whole)
asked:	255 km (=part)	=? % of 1080 km
	510 km (=part)	=? % of 1080 km
	315 km (=part)	=? % of 1080 km
CD:	$\frac{255\,\text{km}}{1080\,\text{km}} \times 100$	= 23.6%
WS:	$\frac{510\,\text{km}}{1080\,\text{km}} \times 100$	= 47.2%
Adm.:	$\frac{315\,\text{km}}{1080\,\text{km}} \times 100$	= 29.2 %
		100.0%

(Check if the sum of all percentages is 100%!!)

Example 2:

The total costs of a well were £S 8700. £S 3900 were contributed by the community, £S 4800 by the project. How many % did the community contribute, and how many % the project?

given:	total costs £S 8700	= 100% (= whole)
asked:	£S 3900 (= part)	=? % of £S 8700
	£S 4800 (= part)	=? % of £S 8700
community:	$\frac{£S\,3900}{£S\,8700} \times 100$	= 44.8%
project:	$\frac{£S\,4800}{£S\,8700} \times 100$	= 55.2%
		100.0%

5.3 Measurements

The most important and common measurements for water supply work are compiled here in transformation tables.

A) <u>Measurements for Distances in Metric System</u>

		to these:				
		mm	**cm**	**dm**	**m**	**km**
If you want to change these units:	mm		÷ 10	÷ 100	÷ 1,000	÷ 1,000,000
	cm	× 10		÷ 10	÷ 100	÷ 100,000
	dm	× 100	× 10		÷ 10	÷ 10,000
	m	× 1,000	× 100	× 10		÷ 1,000
	km	× 1,000,000	× 100,000	× 10,000	× 1,000	

mm = millimetre
cm = centimetre
dm = decimetre
m = metre
km = kilometre

Using transformation tables you can change from one unit to another. Use them as follows:

<u>Example:</u>

435 m =? km

You want to transform the unit “m” to “km”. Look in the left column for “m” and along the top row for “km”. You find the necessary operation for transformation where the column of “km” meets the row of “m”: ÷ 1,000

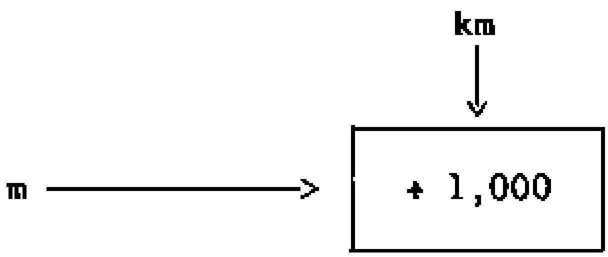

Therefore divide 435 by 1,000.

435 m = (435 ÷ 1,000) km = 0.435 km

B) <u>Measurements for Distances in English System</u>

		to these:				
		1/16 “	**“**	**‘**	**yd**	**mile**
If you want to change these units:	$\frac{1}{16}$ “		÷ 16	÷ 192	÷ 576	÷ 1,013,760
	“	× 16		÷ 12	÷ 36	÷ 63,360
	‘	× 192	× 12		÷ 3	÷ 5,280
	yd	× 576	× 36	× 3		÷ 1,760
	mile	× 1,013,760	× 63,360	× 5,280	× 1,760	

1/16 “ = one sixteenths inch
“ = inch
‘ = foot
yd = yard
mile = mile

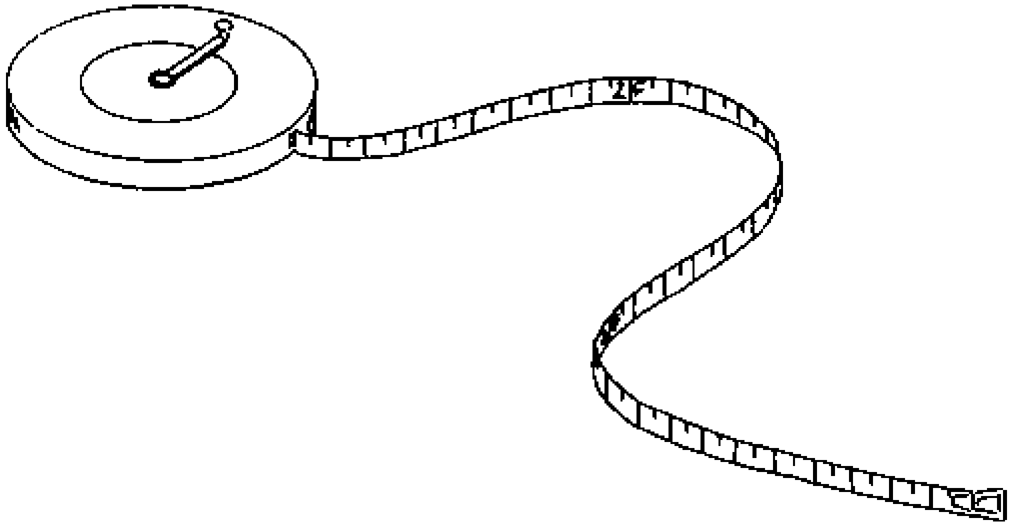

C) Measurements for Distances: Transformations between Metric and English System

		to these:						
		cm	**“**	**‘**	**yd**	**m**	**km**	**mile**
If you want to change these units:	cm		÷ 2.54	÷ 30.48	÷ 91.44	÷ 100		
	“	× 2.54		÷ 12	÷ 36	÷ 39.37		
	‘	× 30.48	× 12		÷ 3	÷ 3.28		
	yd	× 91.44	× 36	× 3		÷ 1.09		
	m	× 100	× 39.37	× 3.2808	× 1.0936		÷ 1,000	÷ 1,609
	km					× 1,000		÷ 1.609
	mile					× 1,609	× 1.609	

cm = centimetre
“ = inch
‘ = foot
yd = yard
m = metre
km = kilometre
mile = statute mile

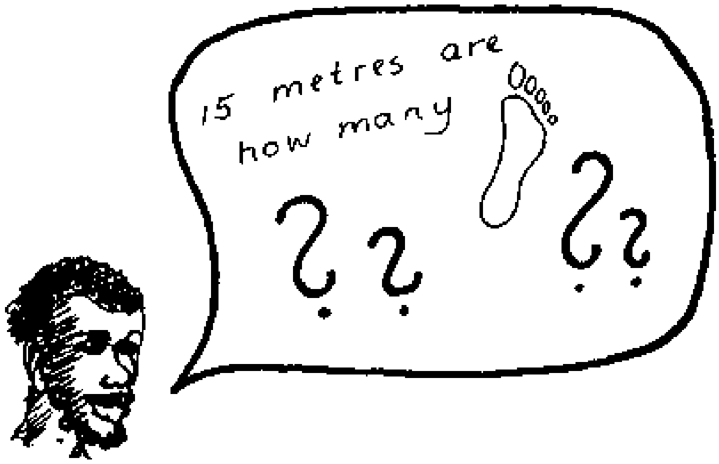

D) Measurements for Areas in Metric System

		to these:		
		cm^2	**dm^2**	**m^2**
If you want to change these units:	cm^2		÷ 100	÷ 10,000
	dm^2	× 100		÷ 100
	m^2	× 10,000	× 100	

cm^2 = square centimetre
dm^2 = square decimetre
m^2 = square metre

E) <u>Measurements of Volumes</u>

		to these:				
		cm^3 = ml	**dm^3 = lit**	**gal**	**drum**	**m^3**
If you want to change these units:	cm^3		÷ 1,000	÷ 4,550	÷ 220,000	÷ 1,000,000
	dm^3	× 1,000		÷ 4.55	÷ 220	÷ 1,000
	gal	× 4,550	× 4.55		÷ 48.4	÷ 220
	drum	× 220,000	× 220	× 48.4		÷ 4.55
	m^3	× 1,000,000	× 1,000	× 220	× 4.55	

cm^3 = cubic centimetre = ml = millilitre
dm^3 = cubic decimetre = ℓ = lit = litre
gal = gallon (imperial)
drum = drum
m^3 = cubic metre

For transformation of measurements of pumping rates (= yields = discharge = volume/time) see 8.34/1.

F) <u>Measurements for Time</u>

		to these:			
		sec	**min**	**h**	**days**
If you want to change these units:	sec		÷ 60	÷ 3,600	÷ 86,400
	min	× 60		÷ 60	÷ 1,440
	h	× 3,600	× 60		÷ 24
	days	× 86,400	× 1,440	× 24	

sec = second
min = minute
h = hour
days = days

G) Measurements for Weights

		to these:			
		mg	**g**	**kg**	**t**
If you want to change these units:	mg		÷ 1,000	÷ 1,000,000	÷ 1,000,000,000
	g	× 1,000		÷ 1,000	÷ 1,000,000
	kg	× 1,000,000	× 1,000		÷ 1,000
	t	× 1,000,000,000	× 1,000,000	× 1,000	

mg = milligram
g = gram
kg = kilogram
t = tonne = metric ton

H) Measurements for Temperatures

Conversion formulas:

$$°F = \frac{9}{5}°C + 32$$

°F = degree Fahrenheit

$$°C = (°F - 32) \times \frac{5}{9}$$

°C = degree Celsius

Conversion table (approximate):

°C	°F
-18	0
-10	14
0	32
10	50
20	68
30	86
40	104
50	122
60	140
70	158
80	176
90	194
100	212

°F	°C
0	- 17.8
10	- 12.2
20	- 6.7
30	- 1.1
32	0
40	4.4
50	10
60	15.6
70	21.1
80	26.7
90	32.2
100	37.8
110	43.3
120	48.9
130	54.4
140	60
150	65.6
160	71.1
170	76.7
180	82.2
190	87.8
200	93.3
210	98.9
212	100

Conversion scale:

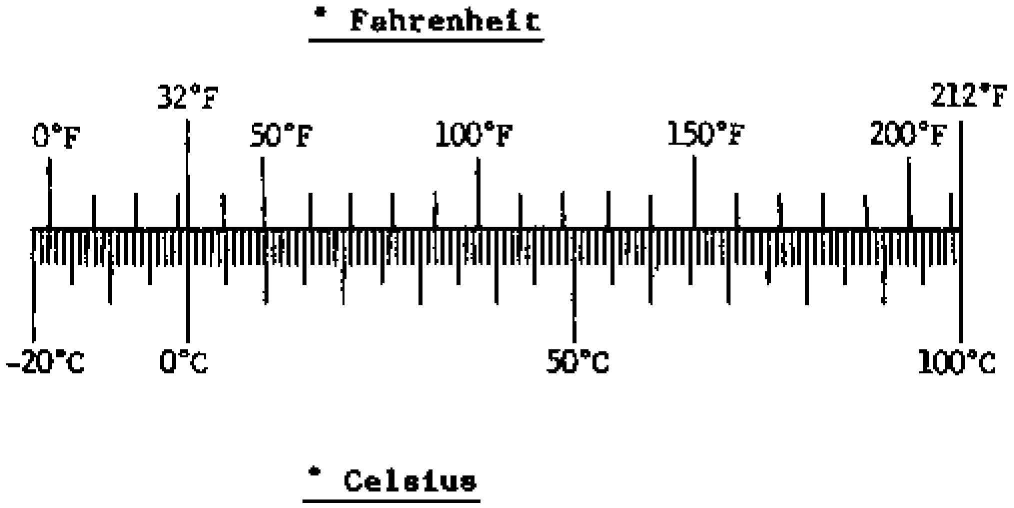

5.4 Basic Geometry

The most basic terms and definitions of geometry necessary for technical work are compiled here:

A) Point

or ×

A point is a very small area. For example the crossing of 2 straight lines is a point.

B) Straight Line

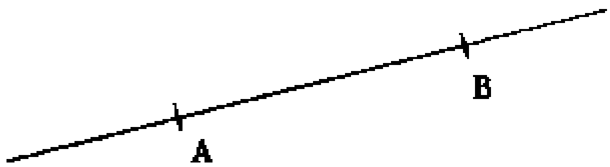

A straight line is indefinitely long and indefinitely thin. Any 3 points on the line mark a 180° angle. Two points define a straight line. A straight line is the shortest distance between 2 points.

Examples for straight lines:

- the edge of a table
- a measuring tape
- the string of a plumb bob

C) Plane

A plane is indefinitely long and broad and indefinitely thin. Straight lines can be fitted into the plane in any direction. Three points define a plane.

Examples for planes:

- a piece of paper
- the straight surface of a table

- the surface of a lake

D) <u>Angle</u>

An angle is formed between two intersecting lines.

The angle between the lines AB and BC is called <ABC.

<ABC is the rotation required to turn the line AB on to the line BC: the centre of the rotation is point B.

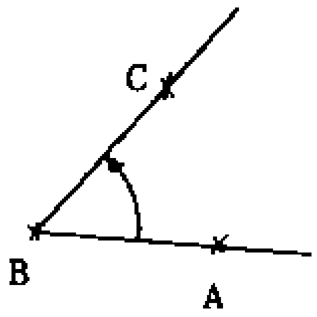

If AB is rotated about point B, each point on the line describes a circle. An angle is measured in degrees.

The complete rotation is 360°.

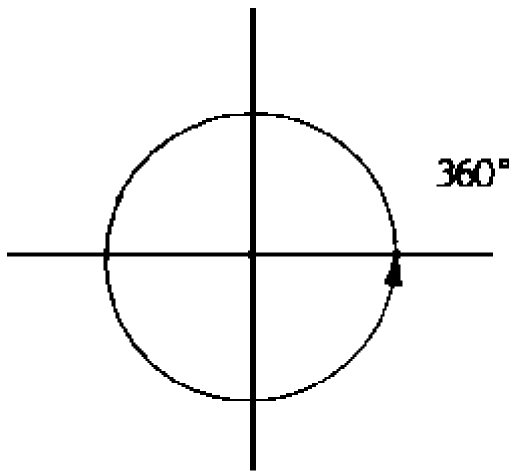

One degree is $\frac{1}{360}$ of a complete rotation.

Examples for angles:

- the angles between trusses of a roof

¾ of a complete rotation is 270°.

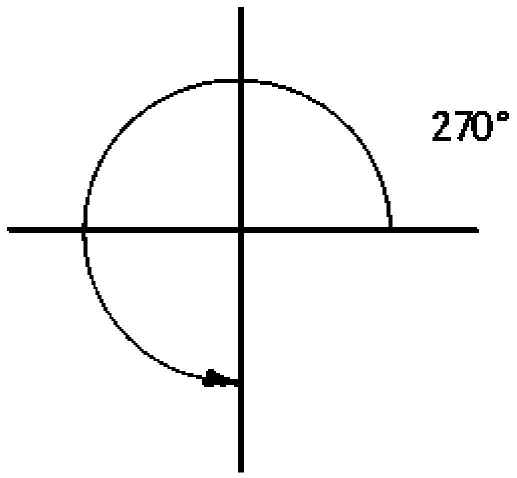

½ of a complete rotation is 180°.

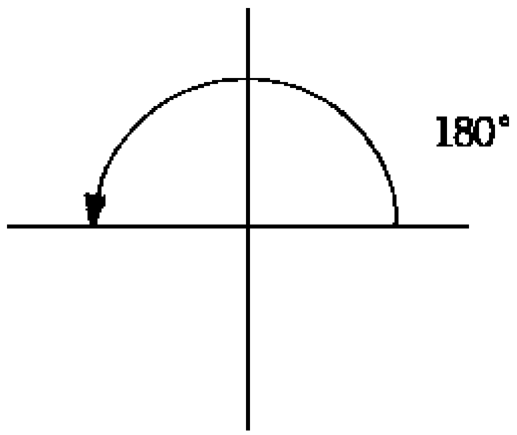

¼ of a complete rotation is 90°; this is known as **“right angle”.**

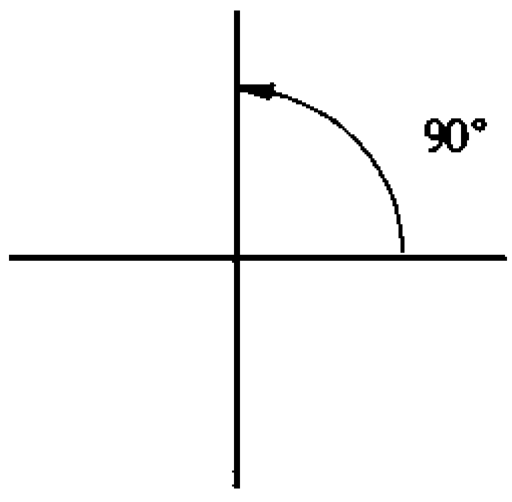

Examples for right angles:

- the corner of a table
- the corner of a window
- the corner of a house
- the corner of a sheet of paper

- the corner of a latrine slab

E) Parallel Lines

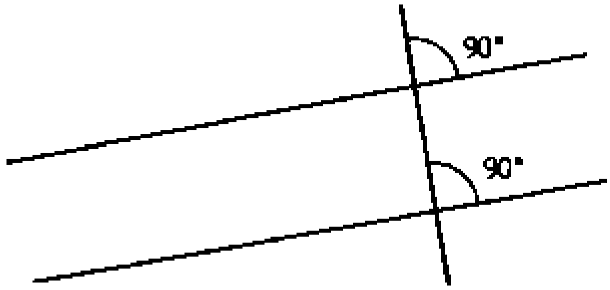

Parallel lines are lines which never meet. They always remain the same distance apart, no matter how far they are extended.

Examples for paralles lines:

- two opposite sides of a table
- two opposite edges of sawn timber
- two opposite edges of a sheet of paper
- railway tracks
- two legs of a ladder

F) Symmetry about an Axis

Shapes in a plane are symmetric about an axis (= straight line) if folded about that axis, one half can be superimposed on the other. Each part has a corresponding part the same distance from the axis of symmetry.

Examples for symmetry about an axis:

- a sheet of paper
- a rectangle
- a circle
- a blackboard
- the surface of a table

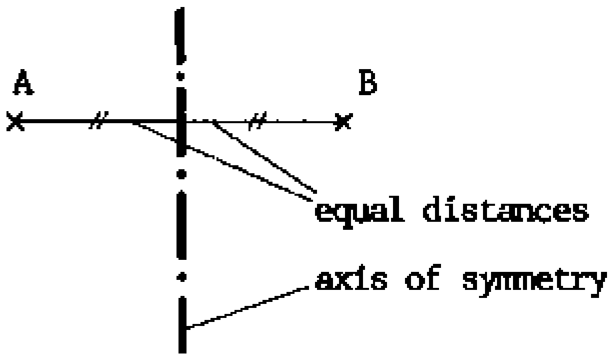

Symmetry of 2 Points A and B

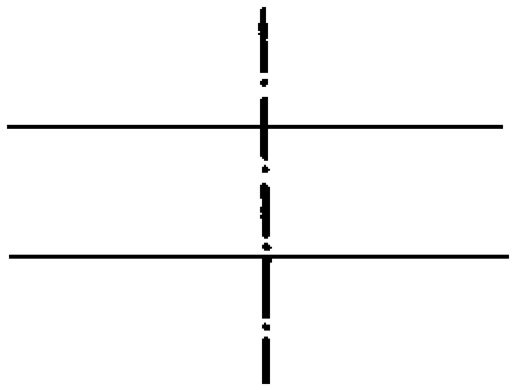

Symmetry of 2 Parallel Lines

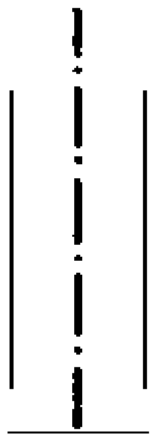

Symmetry of 2 Parallel Lines

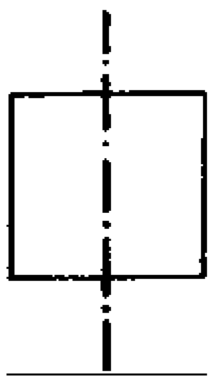

Symmetry of Square

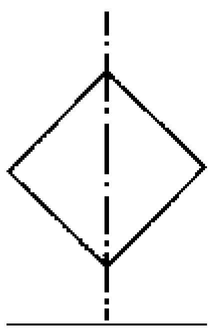

Symmetry of Square

Symmetry of Rectangle

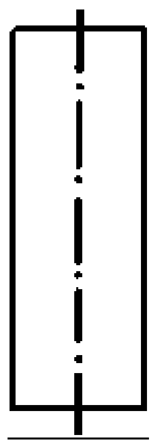

Symmetry of Rectangle

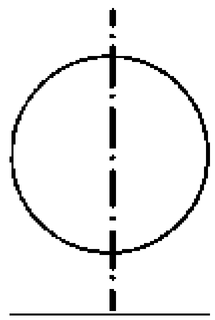

Symmetry of Circle

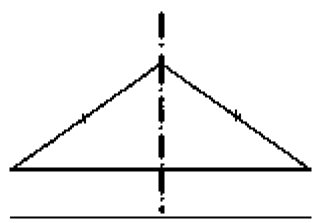

Symmetry of Equilateral Triangle

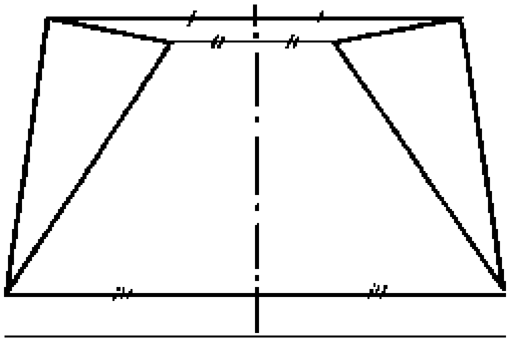

Symmetry of 2 Triangles

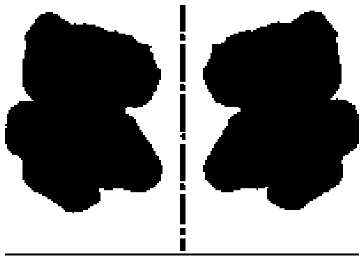

Symmetry of 2 Irregular Shapes

G) Symmetry about a Plane

3- dimensional solids are symmetric about a plane if each part has a corresponding part the same distance from the plane of symmetry. That means that they can be divided (= cut) into two equal, exactly similar parts.

Examples for symmetry about a plane:

- rectangular solids
- cylinder
- screwdriver
- hammer
- shovel
- pipe
- fruits like papaya

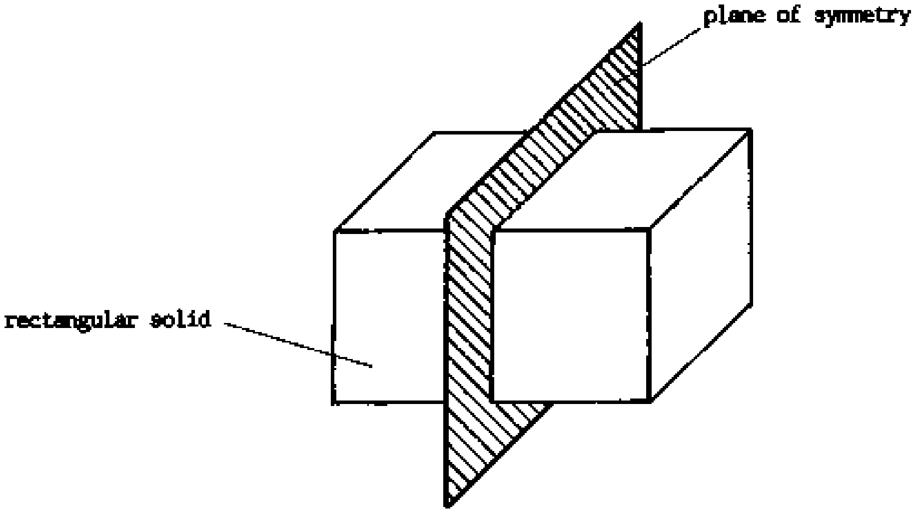

H) Rotational Symmetry about an Axis

3-dimensional rotational symmetric shapes can be produced by rotating any plane shape around an axis. They can be turned around their axis and always look the same.

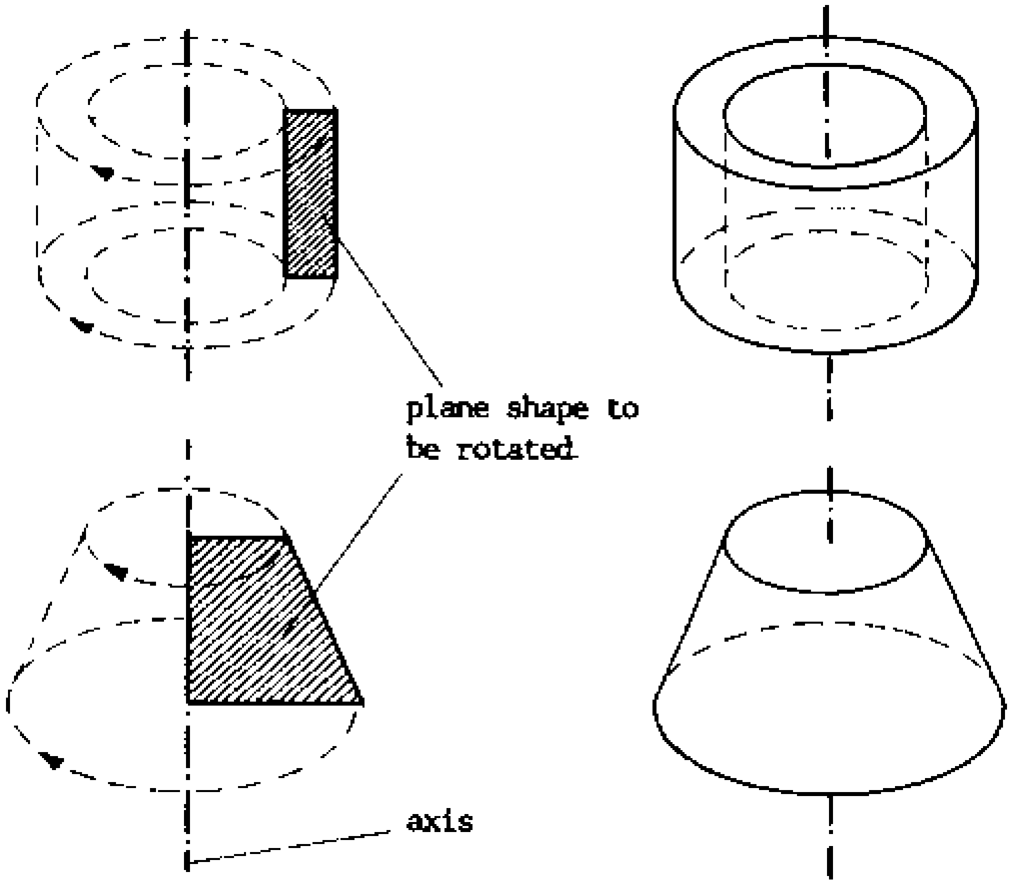

Rotational symmetric items are symmetric about any plane through the axis (that are indefinitely many planes of symmetry). Any plane vertical to the axis cuts the rotational symmetric shape in a circle.

Examples for rotational symmetry:

- pipes
- wooden items produced by lathing
- clay pots produced on a potter's wheel
- bowls
- bottles
- nails
- concrete rings
- tyres

I) <u>Triangle</u>

Three points connected with straight lines form a triangle.

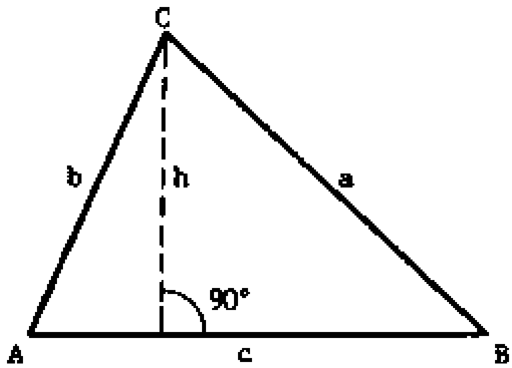

Area:	$A = \frac{1}{2} h c$
Perimeter:	P = a + b + c

J) Quadrilateral

Four points connected with straight lines form a quadrilateral. It is also called polygon of 4 sides.

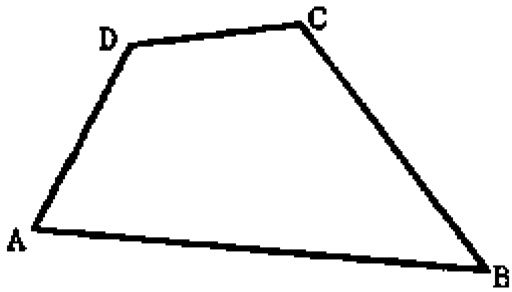

K) Parallelogram

A parallelogram is a quadrilateral with both pairs of opposite sides parallel and equal in length.

Connections:	a || c
	b || d
	a = c
	b = d
Area:	A = a h
Perimeter:	P = 2(a+b) = 2(c+d)

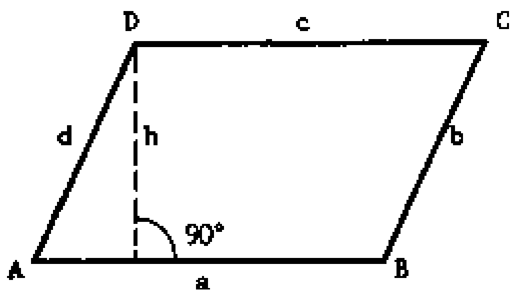

L) Rectangle

A rectangle is a parallelogram with right angles. A rectangle is symmetric about 2 axis. The diagonal is the connection of two opposite corners by a straight line.

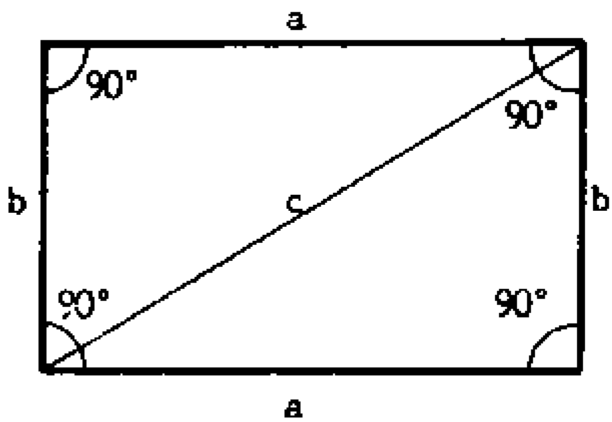

Connections:	all four angles: 90°
Area:	A = a b
Perimeter:	P = 2(a+b)
Diagonal:	$c = \sqrt{a^2 + b^2}$

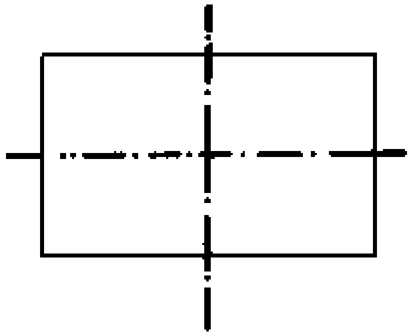

Examples for rectangles:

- sheet of paper
- blackboard
- door
- latrine slabs

M) <u>Square</u>

A square is a rectangle with all sides equal. A square is symmetric about 4 axis.

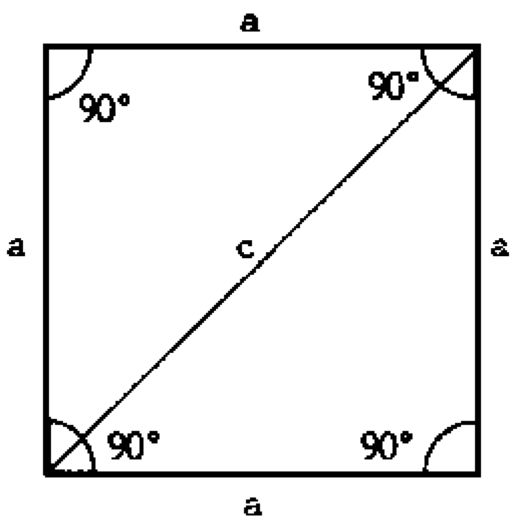

Area:	$A = a^2$
Perimeter:	$P = 4\,a$
Diagonal:	$c = \sqrt{2\,a^2}$

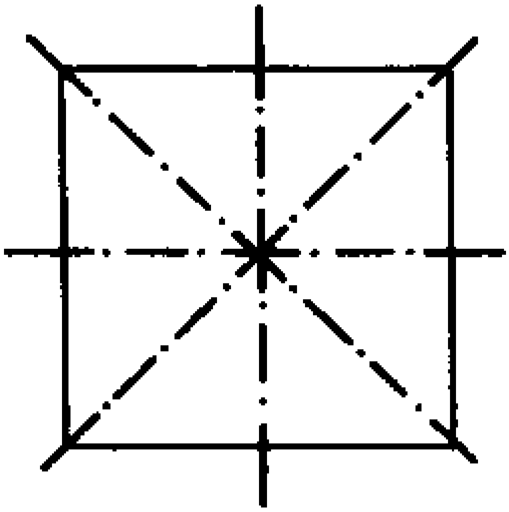

Examples for squares:

- childrens' squatting slab
- manhole in well cover

N) Circle

Points in a plane with the same distance from a fixed point form the circumference of a circle. The fixed point is called the centre of the circle, the constant distance the radius. A straight line through the centre is called the diameter.

A circle is symmetric about all straight lines through the centre.

Radius:	$r = \frac{d}{2}$
Diameter:	$d = 2\,r$
Circumference:	$C = 2\,\pi\,r$
Area:	$A = \pi r^2 = \frac{1}{4}\,\pi\,d^2$
	$\pi = 3.14$

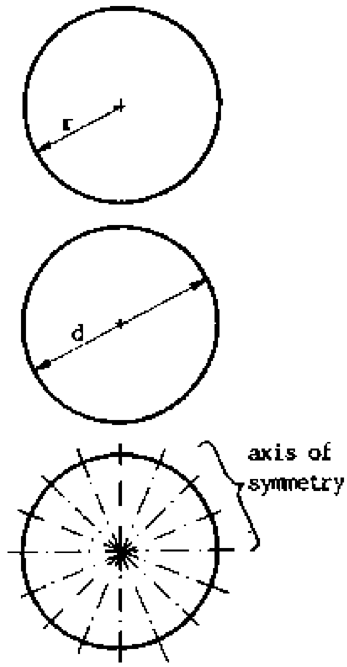

0) Hollow Circle

Two circles with the same centre form a hollow circle.

A hollow circle is symmetric about all straight lines through the centre.

Inside radius:	r	
Outside radius:	R	
Inside Diameter:	d	
Outside Diameter:	D	
Area:	A	$= \pi (R^2 - r^2)$
		$= \frac{1}{4} \pi (D^2 - d^2)$
		$= \pi (R + r)(R - r)$

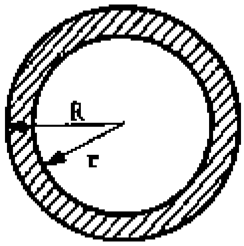

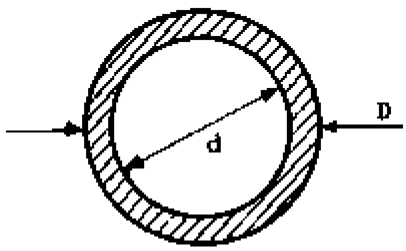

Examples for hollow circles:

- washers
- rubber seatings

P) Cylinder

A rectangle rotating around its axis forms a cylinder. A cylinder has the same circle as base and top. A cylinder is rotational symmetric.

Radius:	r
Diameter:	$d = 2r$
Height or length:	h or l
Volumes:	$V = \pi r^2 h$
Total surface area:	$SA = 2 \pi r h + 2 \pi r^2$

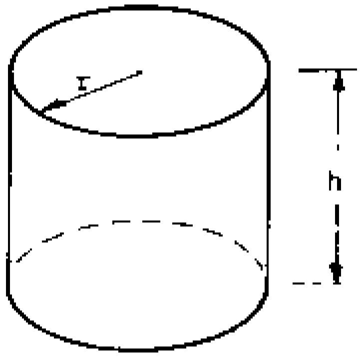

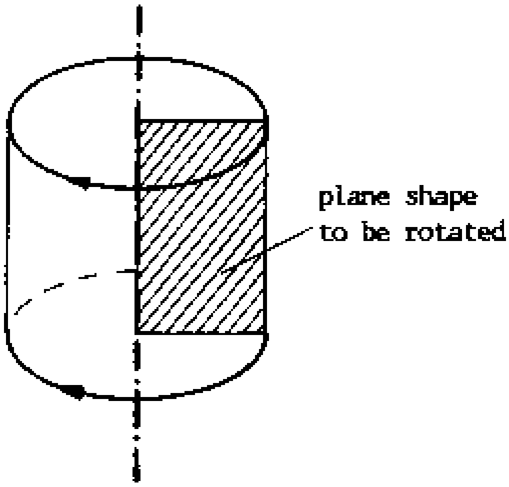

Examples for cylinders:

- reinforcement rod
- tins
- poles
- axles

Q) Hollow Cylinder

Two cylinders with the same centre form a hollow cylinder. A hollow cylinder is rotational symmetric.

Inside radius:	r
Outside radius:	R
Inside diameter:	d (= ID)
Outside diameter:	D (= OD)
Height or length:	h or l
Volume:	$V = \pi (R^2 - r^2) h$

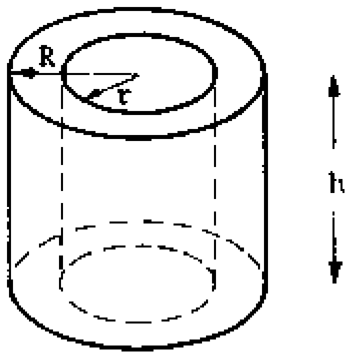

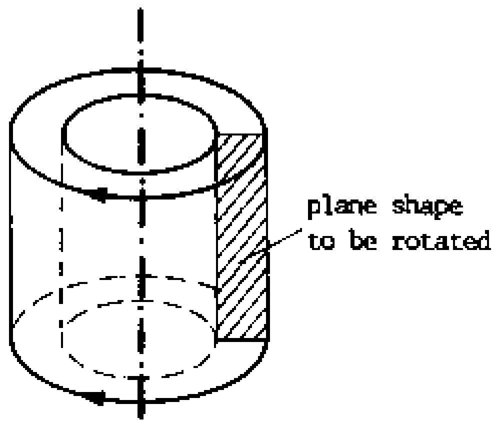

Examples for hollow cylinders:

- pipes
- concrete rings

R) <u>Rectangular Solid (= Cuboid)</u>

A rectangular solid is a solid confined by 6 rectangles. It is symmetric about 3 planes.

Volume:	V = a b c
Total surface area:	SA = 2(ab+ac+cb)

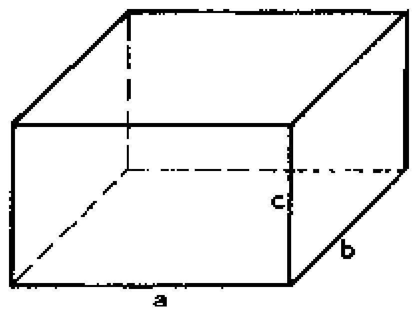

Examples for rectangular solids:

- sawn timber
- box

S) <u>Cube</u>

A cube is a special case of a cuboid. All its sides are equal.

Volume:	$V = \ell^3$
Total surface area:	$SA = 6\,\ell^2$

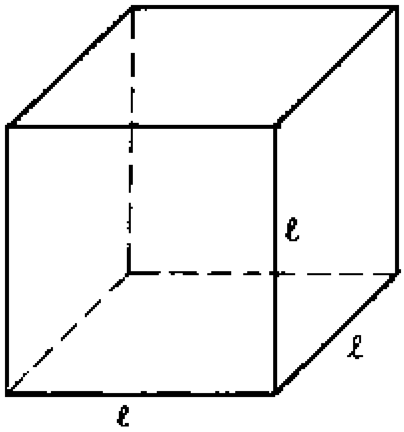

T) <u>Sphere (= Ball)</u>

A sphere is a 3-dimensional body. All its points have the same distance from a fixed point which is the centre. It is rotational symmetric about any axis through the centre.

Volume:	$V = \frac{4}{3}\pi R^3$
Surface area:	$SA = 4\,\pi\,R^2$

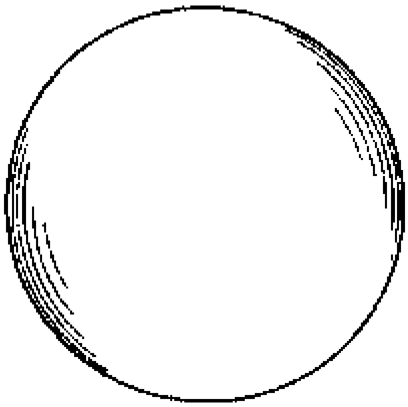

Examples for spheres:

- ball
- ball bearings

5.5 Calculation of Diagonal

For marking a rectangular layout plan (rectangle), we need to know the diagonal. It can be calculated in the following way:

given: 2 sides of a rectangle, a and b
asked: diagonal c

According to Pythagoras theorem, in a right angled triangle the square on the hypotenuse (= longest side) is equal to the sum of the squares on the two other sides.

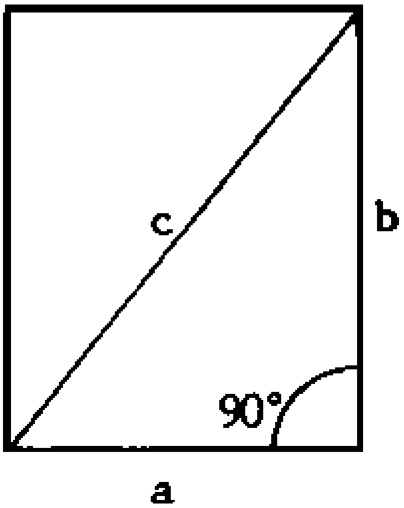

$\boxed{a^2 + b^2 = c^2}$

Steps of Calculation

1. Calculate a^2.
2. Calculate b^2.
3. Add up $a^2 + b^2$.
4. Estimate c. Calculate c^2. Compare c^2 with $a^2 + b^2$.
5. Make a new and better estimation for c. Calculate c^2. Compare c^2 with $a^2 + b^2$.
6. Repeat step No.5 until you have a value for c exact enough.

Draw the rectangle and check if the calculated value for c is correct.

Alternatively, you can calculate $c = \sqrt{a^2 + b^2}$.

Example:

given: rectangle with the sides 2.30 m and 3.50 m
asked diagonal

1. $a = 2.30 \longrightarrow a^2 = 5.29$
2. $b = 3.50 \longrightarrow \underline{b^2 = 12.25}$
3. $a^2 + b^2 = 17.54$
4. $c \stackrel{?}{=} 4 \longrightarrow 4^2 = 16 \longrightarrow 4$ is too small
   $c \stackrel{?}{=} 5 \longrightarrow 5^2 = 25 \longrightarrow 5$ is too large
   $\rightarrow$ try a number between 4 and 5
5. $c \stackrel{?}{=} 4.2 \longrightarrow 4.2^2 = 17.64 \longrightarrow 4.2$ is too large
   $c \stackrel{?}{=} 4.1 \longrightarrow 4.1^2 = 16.81 \longrightarrow 4.1$ is too small
   $\rightarrow$ try a number between 4.1 and 4.2
   $c \stackrel{?}{=} 4.18 \longrightarrow 4.18^2 = 17.47$
   $c \stackrel{?}{=} 4.19 \longrightarrow 4.19^2 = 17.556 \cong 17.54$
6. $\underline{\underline{c = 4.19 \text{ m}}}$
7.

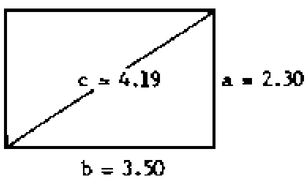

Scale 1:100

5.6 Calculation of Volumes

The volume of a solid is the amount of space it occupies. It can be expressed in cm^3, dm^3 = lit = litre, gal = gallon, drum or m^3. The transformation table for changing these units is found at 5.3/4.

The volume of a rectangular solid (= cuboid) and of a cylinder and of a hollow cylinder (= tube) are the three most important ones for technical purposes (see also 5.4/9-10). Their calculation is shown here with examples.

A) <u>Volume of a Rectangular Solid (= Cuboid)</u>

volume of a cuboid = length × breadth × height

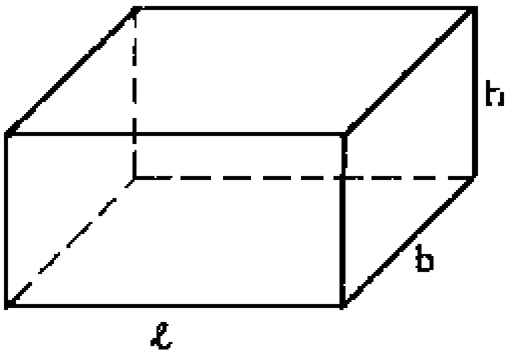

$V = \ell \times b \times h$

Take care to multiply only figures with the same units!

<u>Example:</u>

A water tank is 1.50 m long and 1.20 m broad and 80 cm high. How much water can it hold?

given:	ℓ = 1.50 m, b = 1.20 m, h = 80 cm	
asked:	volume	
h	= 80 cm = 0.80 m	
	(The units of length are not the same, therefore we have to change them.)	
$V = \ell \times b \times h$	= 1.50 m × 1.20 m × 0.80 m =	
	= <u>1.44 m^3</u>	
	= 1.44 × 1,000 lit	= <u>1,440 lit</u>
	$= \frac{1440}{4.55}$ gal	= <u>316.5 gal</u> (for transformation see 5.3/4)
	$= \frac{1440}{220}$ drums	= <u>6.55 drums</u> (for transformation see 5.3/4)

B) <u>Volume of a Cylinder</u>

volume of a cylinder = π × $(\text{radius})^2$ × height

$V = \pi \times r^2 \times h$

$\pi = 3.14$

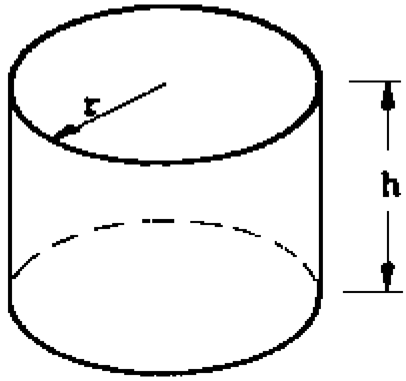

Example:

The inside diameter of a concrete ring is 1.20 m, the height is 92 cm. How much water can be stored inside the concrete ring?

given:	d = 1.20 m, h = 92 cm	
asked:	volume	
h	= 92 cm = 0.92 m	
r = d ÷ 2	= 1.20 m ÷ 2 = 0.60 m	
$V = \pi \times r^2 \times h$	$= 3.14 \times (0.60\ m)^2 \times 0.92\ m$	= <u>$1.0399\ m^3$</u>
	= 1.0399 × 1,000 lit	= <u>1040 lit</u>
	$= \frac{1040}{4.55}$ gal	= <u>228.5 gal</u> (for transformation see 5.3/4)
	$= \frac{1040}{220}$ drums	= <u>4.7 drums</u> (for transformation see 5.3/4)

C) <u>Volume of a Hollow Cylinder (= Tube)</u>

volume of a hollow cylinder = $\pi \times$ [(outside radius)^2 - (inside radius)^2] × height

$V = \pi \times [R^2 - r^2] \times h$

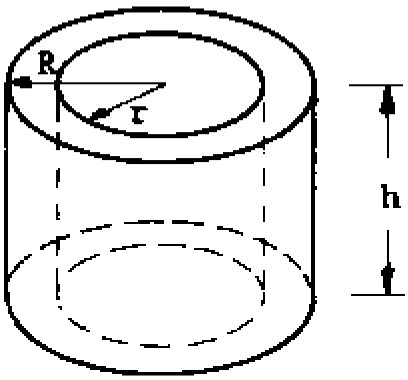

Example:

The outside diameter of a concrete ring is 1.40 m, the inside diameter 1.20 m, the height is 92 cm. How many liters of concrete are needed to cast this ring?

given:	D = 1.40 m, d = 1.20 m, h = 92 cm
asked:	volume
h	= 92 cm = 0.92 m
R = D ÷ 2	= 1.40 m ÷ 2 = 0.70 m
r = d ÷ 2	= 1.20 m ÷ 2 = 0.60 m
$V = \pi \times [R^2 - r^2] \times h$	$= 3.14 \times [(0.70\ m)^2 - (0.60\ m)^2] \times 0.92\ m =$
	= 3.14 × [0.49 - 0.36] × 0.92 = <u>$0.3755\ m^3$</u> = <u>375.5 lit</u>

5.7 Calculation of Weights

It is important to learn to calculate the weight of simple items like concrete rings, timber, water, etc., in order to know if they can be lifted by the available equipment or by the number of people present and transported by the available car.

The weight of a homogenous item (= an item consisting of one material throughout) is calculated as follows:

weight	= density	× volume
W [kg]	= d [kg/dm^3]	× V [dm^3]
W [t]	= d [t/m^3]	× V [m^3]

The density is the weight of one dm^3 (=1 lit = one litre) of a certain material.

It can be expressed in kg/dm^3 or t/m^3. You must multiply the unit of density by the appropriate unit of volume, e.g. kg/dm^3 × dm^3 or t/m^3 × m^3.

The most important densities are (in approximate values):

steel	8	[kg/dm^3 = t/m^3]
concrete	2.5	[kg/dm^3 = t/m^3]
water	1	[kg/dm^3 = t/m^3]
timber, hardwood	0.7	[kg/dm^3 = t/m^3]
timber, softwood	0.55	[kg/dm^3 = t/m^3]

Any item floating on water has a density smaller than 1, any item which sinks in water has a density bigger than 1.

Example 1:

How heavy is the concrete ring of chapter 5.6?

given: V = 0.3755 m^3 = 375.5 dm^3 = 375.5 lit
asked: weight

W = d × V =2.5 kg/dm^3 × 375.5 dm^3 = 938.8 kg

or:

W = d × V =2.5 t/m^3 × 0.3755 m^3 = 0.9388 t

Example 2:

Sawn timber from hardwood is loaded on a lorry in a pile 2.50 m broad, 4.50 m long and 1 m high. How heavy is the load?

given: rectangular solid from hardwood,
ℓ = 4.50 m, b = 2.50 m, h = 1 m
asked: weight

V = ℓ × b × h = 4.50 m × 2.50 m × 1 m = 11.25 m^3
W = d × V = 0.7 t/m^3 × 11.25 m^3 = 7.88 t = 7880 kg

This weight needs to be compared with the loading capacity of the lorry. See also 3.13/1.

5.8 Calculation of Time

A) Indication of Time

We start to count the hours of a day at midnight. According to the British way we count the hours from 0.00 to 12.00 which is midday. These hours are marked with a.m. which stands for the latin words “ante meridiem” and means “before noon”. After midday the hours are counted from 1.00 to 12.00 which is midnight. These hours are marked with p.m. which stands for “post meridiem” and means “after noon”.

According to the international way the hours are counted from midnight 0.00 to midnight 24.00 in one go.

International Time Indication	British Time Indication
0.00	0.00 a.m.
1.00	1.00 a.m.
2.00	2.00 a.m.
.	.
.	.
.	.
12.00	12.00 a.m.
13.00	1.00 p.m.
14.00	2.00 p.m.
15.00	3.00 p.m.
.	.
.	.
.	.
23.00	11.00 p.m.
24.00=0.00	12.00 p.m.

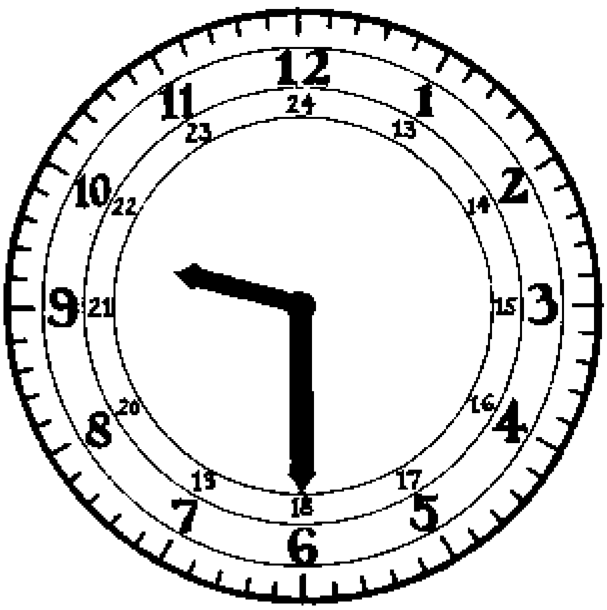

The same indication on the clock can mean two different times and can be expressed in different ways:

No.	Type	Expression	1. Possibility	2. Possibility
1.		on the clock		
2.	international	on a digital watch	**09 30**	**21 30**
3.		in figures with point	9.30	21.30

No.	Type	Expression	1. Possibility	2. Possibility
4.		in figures with dash	$9^{\underline{30}}$	$21^{\underline{30}}$
5.		in words	nine thirty	twenty-one thirty
6.		in words	half past nine	half past twenty-one
7.	british	in figures with point	9.30 a.m.	9.30 p.m.
8.		in figures with dash	$9^{\underline{30}}$ a.m.	$9^{\underline{30}}$ p.m.
9.		in words	half past nine in the morning	half past nine in the evening
10.		in words	nine thirty in the morning	nine thirty in the evening

Full hours can also be expressed like 11 <u>o'clock</u>.

B) <u>Calculation of Periods</u>

Remember:

Indications of time like 9.30 are **<u>not</u>** decimal numbers!

because an hour has 60 minutes and not 100 hundredth (= $\frac{100}{100}$).

When calculating a period of time:

1. Count the minutes from the starting time to the next full hour.
2. Then count the hours to the full hour before the ending time.
3. Then count the remaining minutes.
4. Add upp the times.

<u>Example:</u>

starting time		8.35
ending time		13.48
60 min	- 35 min	= 25 min
13 o'clock	- 9 o'clock	= 4 hours
48 min	- 0 min	= 48 min
4 hours	+ (25 + 48) min =	
= 4 hours	+ 73 min =	
= 4 hours	+ 60 min	+ 13 min =
= 4 hours	+ 1 hour	+13 min =
= <u>5 hours</u>	<u>+ 13 min</u>	

6. Basic Technical Knowledge

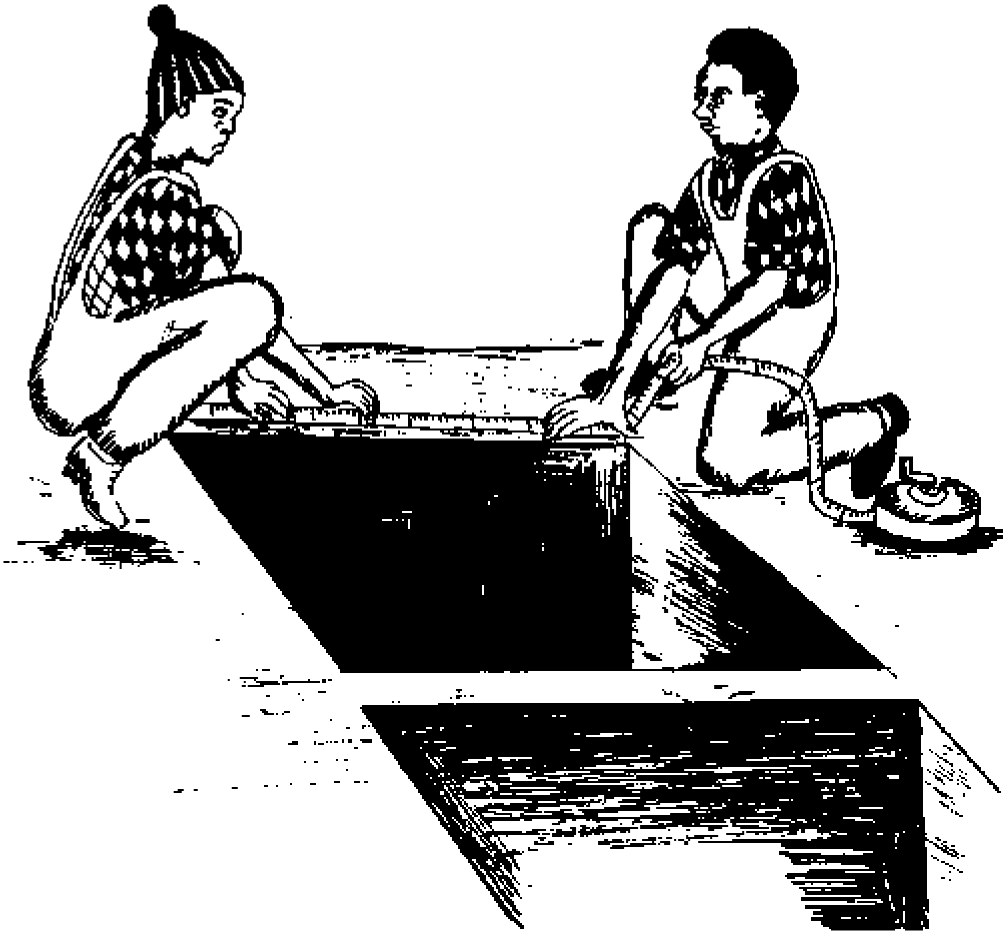

6.1 Basic Technical Drawing

The most basic features of technical drawing are explained in this chapter. Knowledge of these features is necessary in order to enable the technicians to read drawings and manuals. When reading technical drawings, try to identify each line with the corresponding detail on the object. When studying technical drawings, use models or simple objects like a matchbox, a box or a tin, to clarify and to understand the different views. To be able to read technical drawings, you must practise drawing yourself. Practise by drawing objects around you: tools, furniture, houses, wells, latrines. Ask somebody experienced to correct your drawings.

A) Overview of the Different Views

This chapter will explain the following views:

- isometric view,
- cross-section,
- layout plan (= plan),
- front-view (= front elevation),
- side-view (= side elevation),
- exploded diagram, side-view,
- exploded diagram, isometric view,
- cut-away view with hidden inside details.

One view alone does not show the complete information about all details of the object. At least two different views, normally three, sometimes more are necessary to describe all details.

The arrows in the following drawing show from what angle you have to look at a building to obtain the different views. They are explained in the following sections, supplemented by conventions for technical drawing and technical signs.

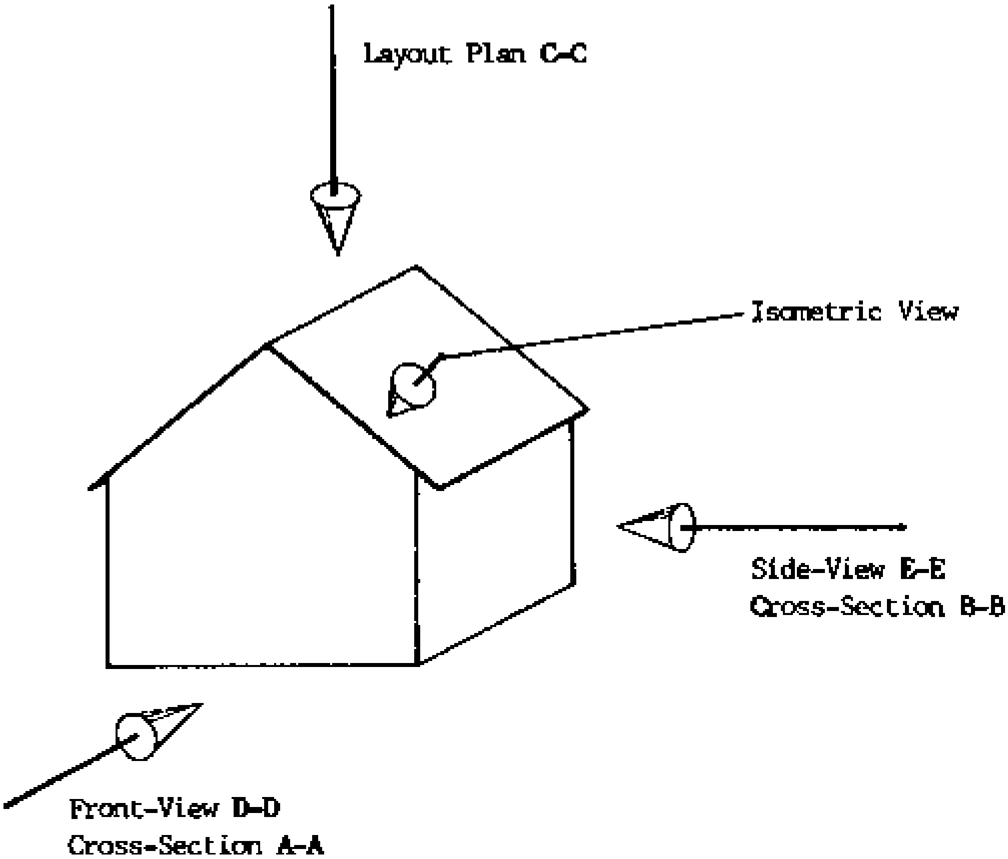

B) Isometric View

The isometric view shows a view comparable to what can be seen with the eye if you look at the object from a particular angle; it resembles what a photograph shows. This way of drawing is used to clarify what the object looks like, but it is not used for plans.

Lines which are parallel in reality also appear parallel in the isometric view (e.g. the sides of the cube). The angles shown in the isometric view are not the same as the angles in reality (e.g. the angles between the sides of the cube are not right angles in the isometric view).

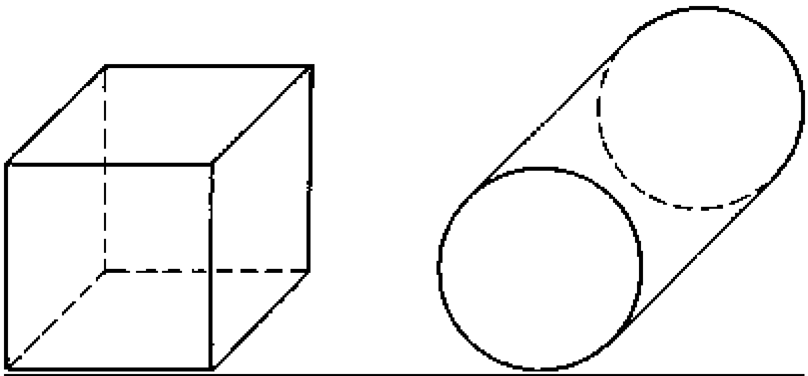

ISOMETRIC VIEW

C) Cross-Section A-A

In a cross-section drawing, the object is cut by a plane, usually through windows, into two parts. You look orthogonally to the cutting plane (= vertical to the cutting plane = from the side) and draw what you can see. This is called a cross-section A-A as shown below. A thick chain, with arrows, marked A-A, in the layout plan (see 6.1/5) shows how the building is “cut” to obtain the cross-section A-A. The chain (interrupted at the drawing) shows haw to cut, the arrows show in which direction to look, the letters near the tip of the arrows indicate the “name” of the view:

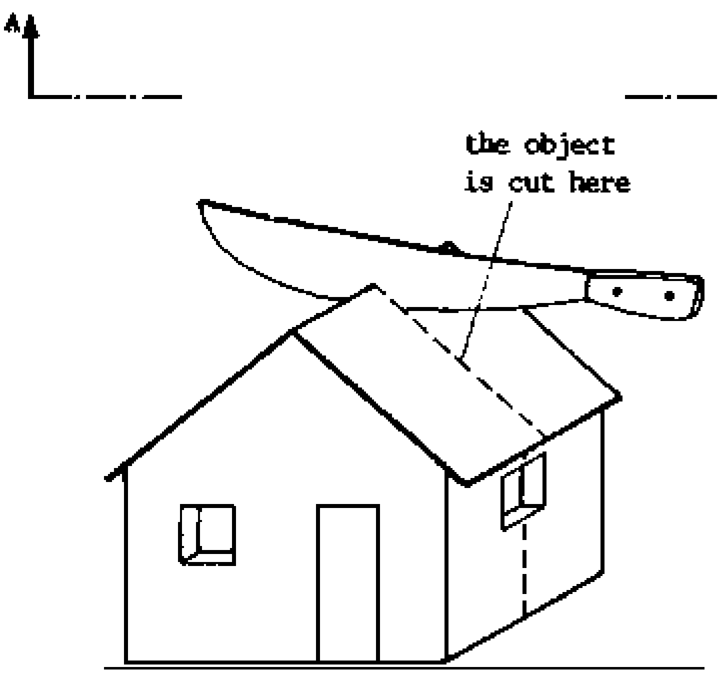

ISOMETRIC VIEW of the whole part

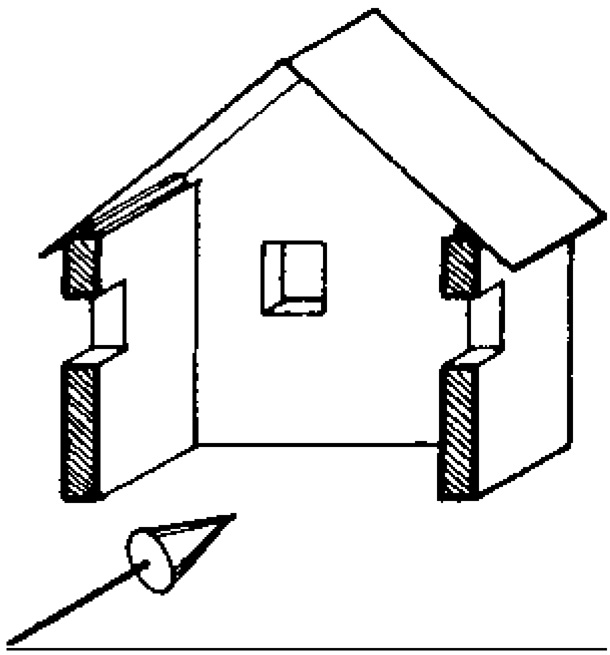

ISOMETRIC VIEW of the remaining part; this is not called “cross-section”!!!

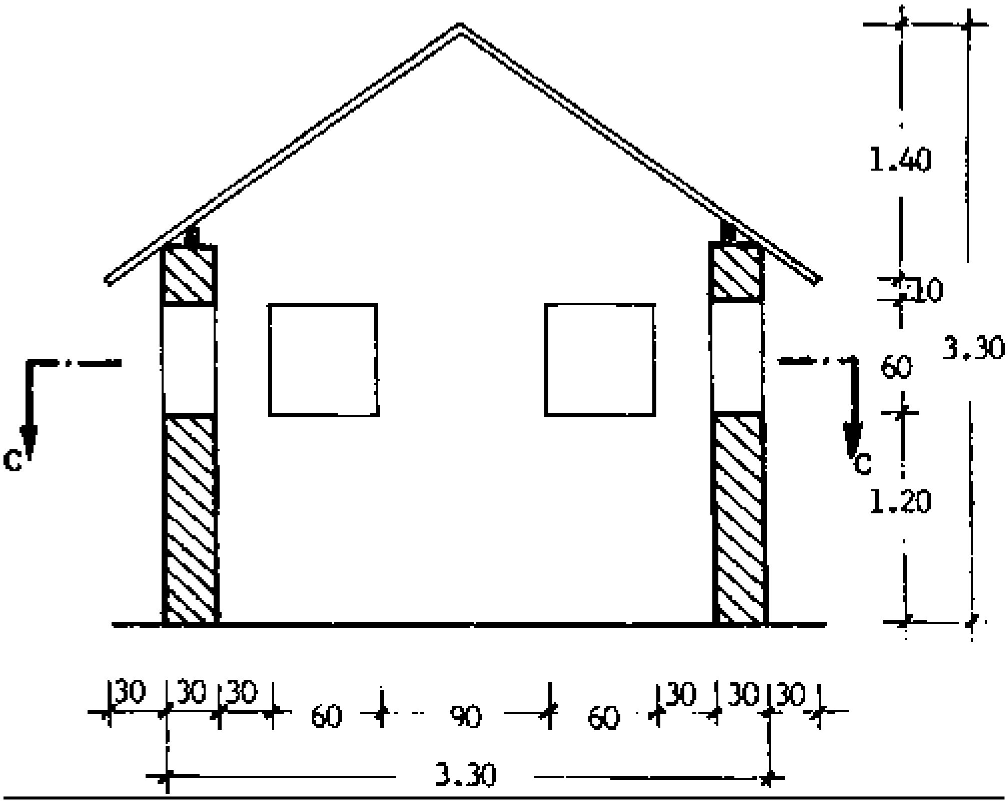

CROSS-SECTION A-A

Scale 1:50

The cut parts are drawn with thick lines and are hatched. The dimensions are given outside the cross-section.

In a cross-section, the planes orthogonal (= vertical) to the cutting plane “disappear” and are shown as lines. For example, you see the floor as a line.

All angles, especially right angles, in a cross-section appear as they are in reality. The thick chain with arrows, marked C-C, shows how the building is “cut” to obtain the layout plan C-C (see 6.1/5).

D) Cross-Section B-B

The building can be cut also in the other direction, parallel to the short side. A thick chain with arrows, marked B-B, in the layout plan (see 6.1/5) shows how the building is “cut” to obtain this cross-section. This cross-section B-B is differentiated from the previous one by the capital letters (B-B instead of A-A).

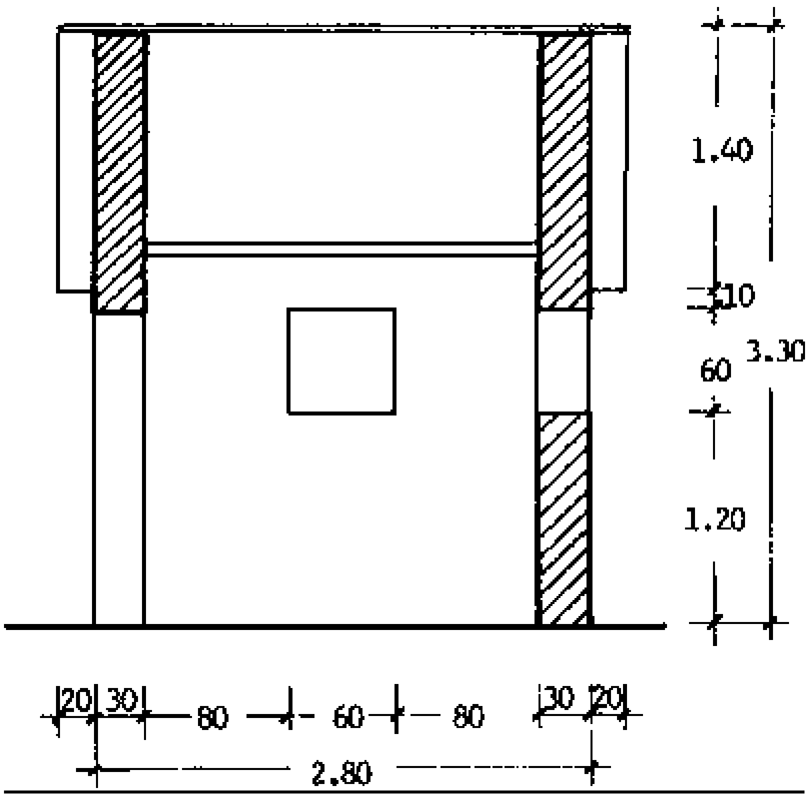

CROSS-SECTION B-B

SCALE 1:50

E) Layout Plan C-C (= Plan C-C)

The layout plan is a horizontal "cross-section" (e.g. a house built half way, up to the bottom-half of the windows). You look orthogonally to the cutting plane (= vertically to the cutting plane = from above) and draw what you can see. A thick chain with arrows, marked C-C, in the cross-section shows how the building is "cut" to obtain the layout plan C-C (see 6.1/3).

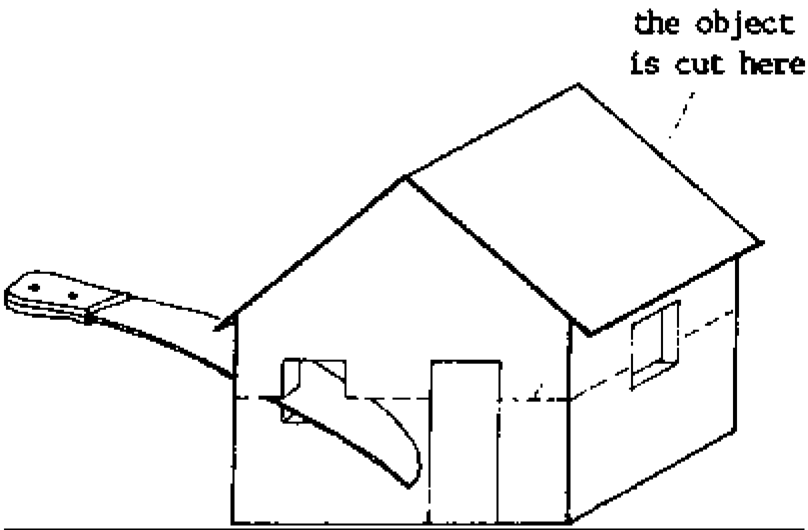

ISOMETRIC VIEW of the whole object

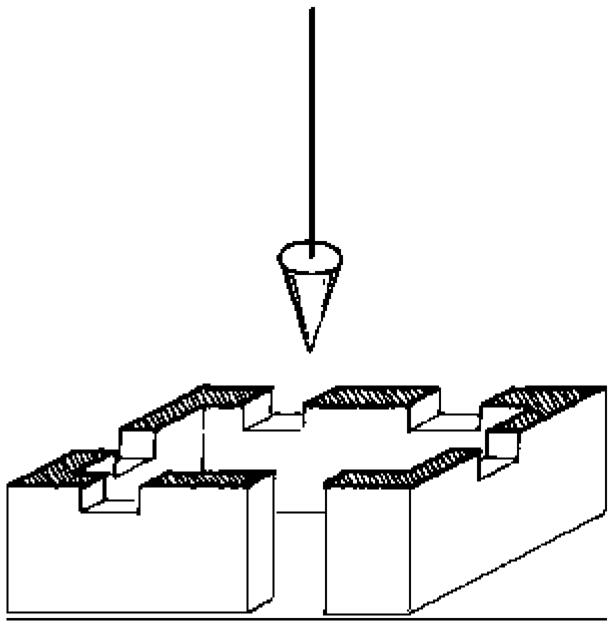

ISOMETRIC VIEW of the bootom half; this is not called “layout plan”!!!

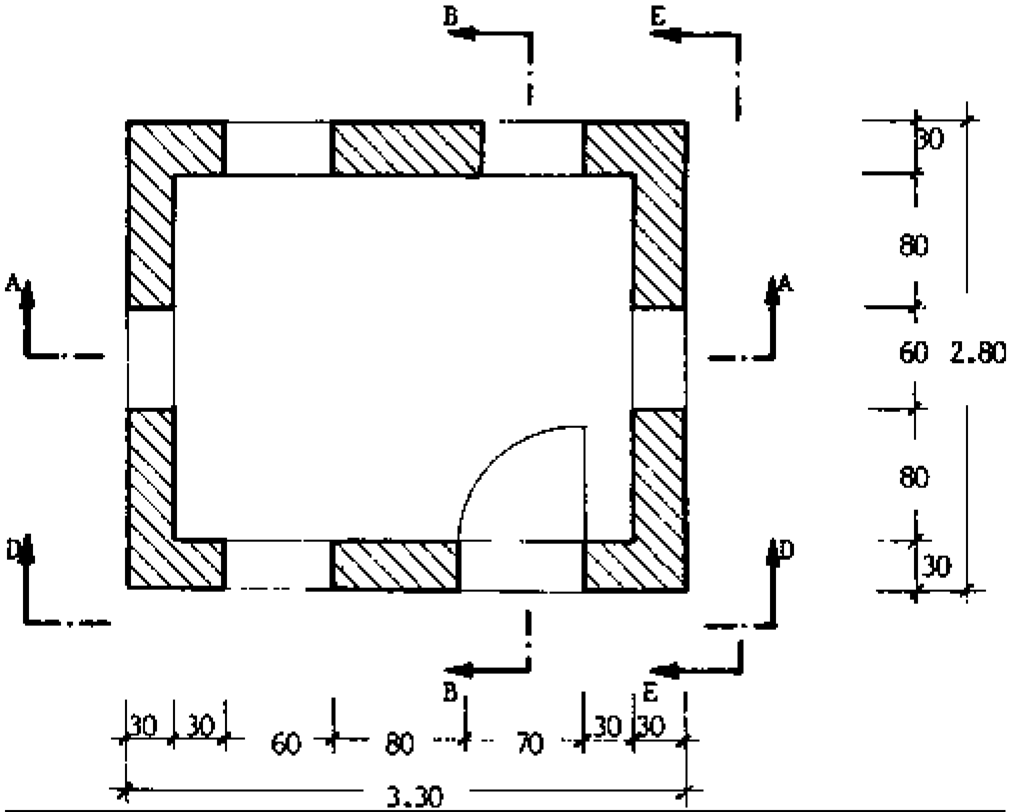

LAYOUT PLAN C-C

Scale 1:50

The dimensions are given beside the layout plan. In a layout plan, the planes orthogonal to the cutting plane “disappear” and are shown as lines, e.g. all vertical walls. All angles, especially right angles, in a layout plan appear as they are in reality.

The thick chain with arrows, marked A-A, shows how the building is “cut” to obtain the cross-section A-A. The thick chain D-D shows how to obtain the front-view D-D. The views B-B and

E-E are indicated in the same way. For some objects it does not make sense to cut them for obtaining the layout plan. In this case, the layout plan is an orthogonal view from above (examples see 6.1/10-15, 17, 18).

F) Front-View D-D (= Front Elevation D-D)

The front-view is an orthogonal view of the object without cutting. A thick chain with arrows, marked D-D in the layout plan (see 6.1/5) shows how to look at the building to obtain the front-view D-D. Hidden lines are sharp edges within the object, but they cannot be seen from outside. They can be shown by dashes. However, avoid showing too many hidden details for the sake of clarity.

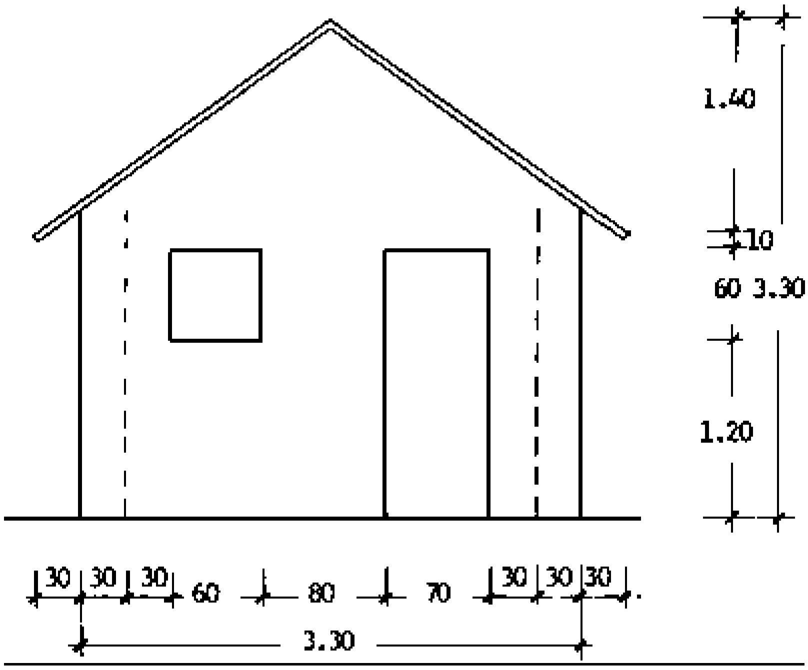

FRONT-VIEW D-D

Scale 1:50

The dimensions are given beside the front-view.

In a front-view, the planes orthogonal to the cutting plane “disappear” and are shown as lines (e.g. the outside wall on the short side of the building).

All angles, especially right angles, in a front-view appear as they are in reality.

G) Side-view E-E (= Side Elevation E-E)

The side-view is an orthogonal view of the object without cutting, similar to the front-view. You have to decide which of them to call front-view and which side-view. Usually, the view at the longer side of the building is called front-view.

A thick chain with arrows, marked E-E in the layout plan (see 6.1/5) shows how to look at the building to obtain the side-view E-E. Hidden lines can be shown with dashes.

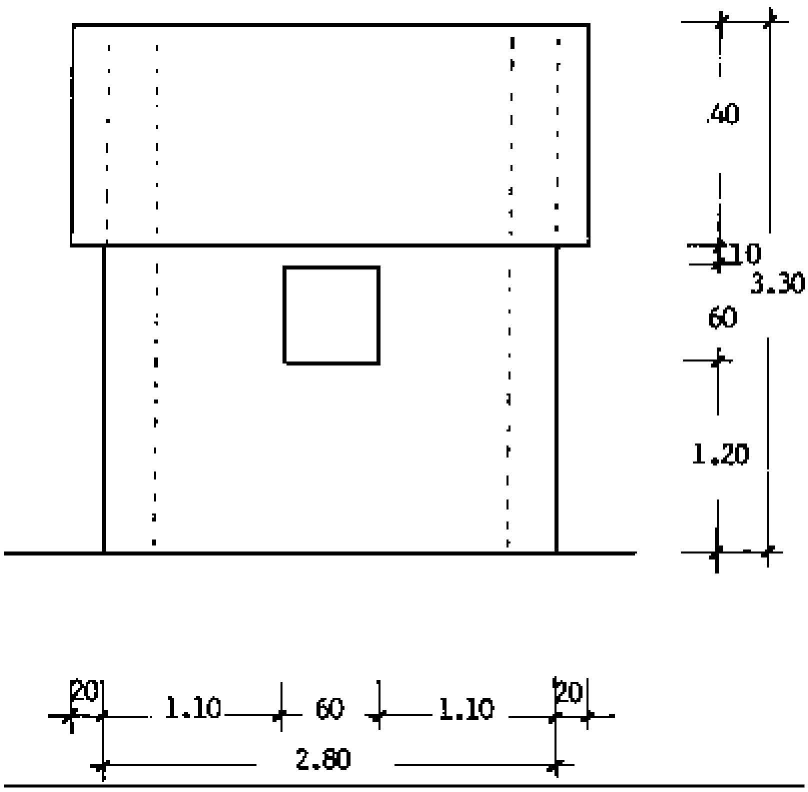

SIDE-VIEW E-E

SCALE 1:50

H) Variation of Cross-Section

If the location of windows, etc. makes it necessary, the object can be “cut” in two different places. A thick chain with arrows, marked F-F, shows where the building is “cut” to obtain the cross-section F-F.

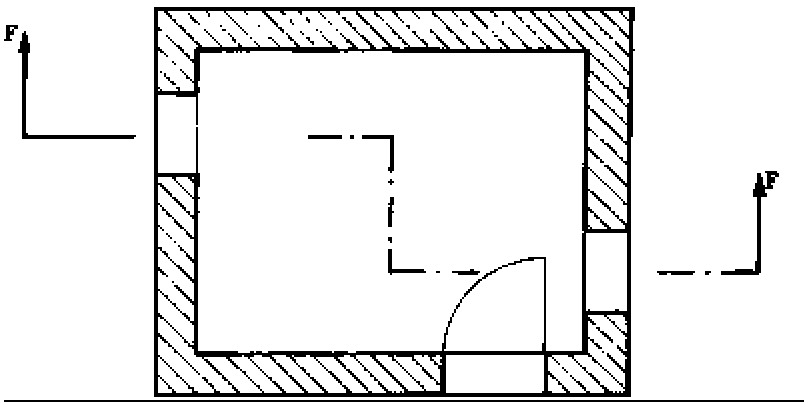

LAYOUT PLAN C-C

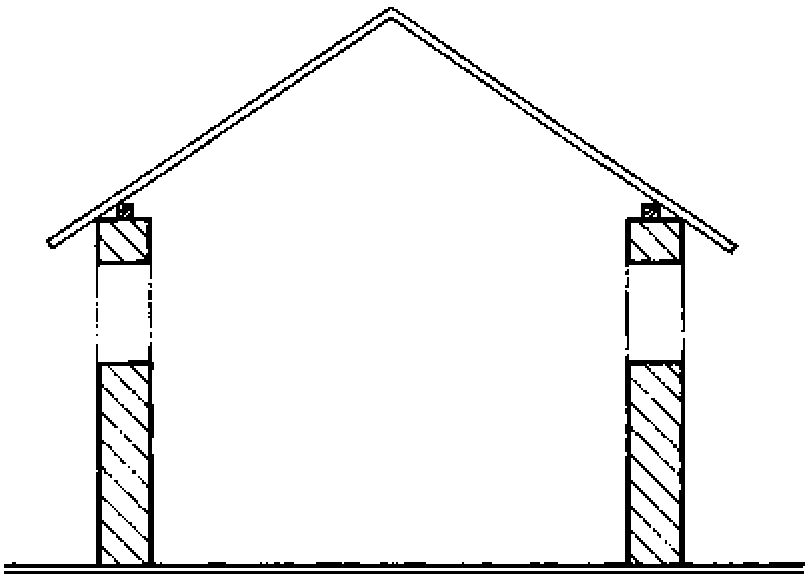

CROSS SECTION F-F

SCALE 1:50

I) Arranging Different Views on a Plan

If a plan is big enough to accomodate several views, they are arranged exactly above and beside each other (see the thin lines! = projection lines) and on one sheet.

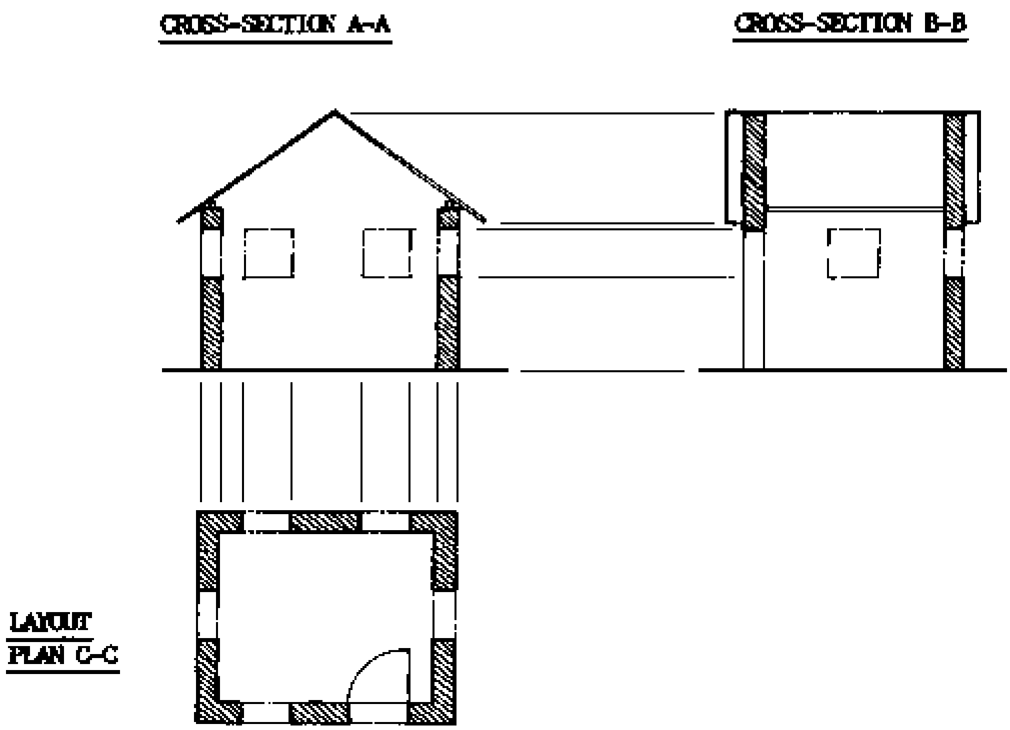

Scale 1:100

Front- and side-views are arranged like this:

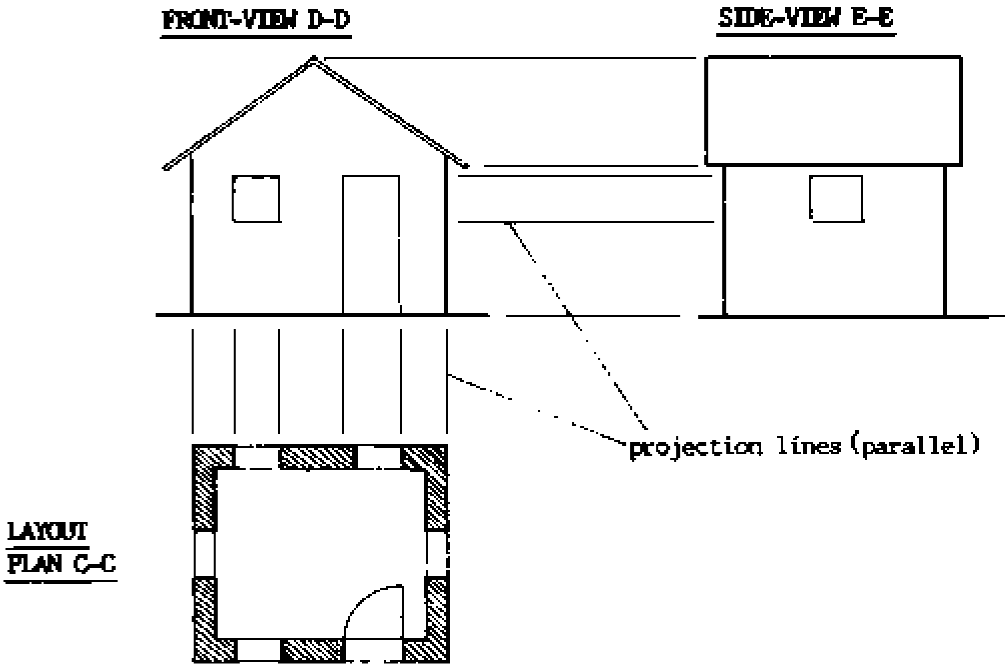

Projection lines connect the different views and show that the different parts of the object have the same width or height in the different views- They are a help while drawing, but normally do not show up in the final picture; here they are added for illustration.

Scale 1:100

If not all views are to be drawn, a different combination of views can be arranged on the sheet.

J) Examples of the Different Views

Several objects are shown in the following in the different views for illustration of the drawing principles (for mere examples see especially 7.10/5; 8.14; 8.18; 8.19; 8.30; 9.14 and many others);

1. Cylinder

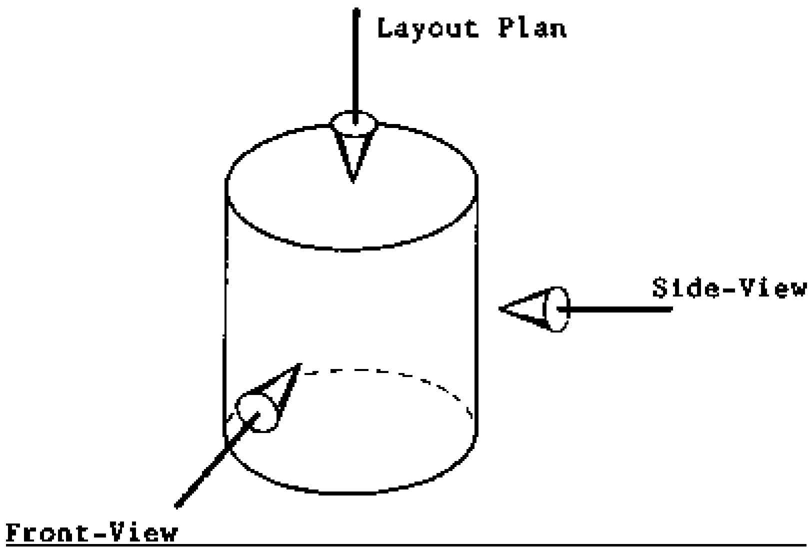

ISOMETRIC VIEW

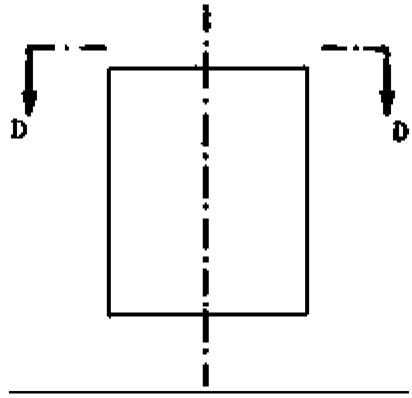

FRONT-VIEW A-A

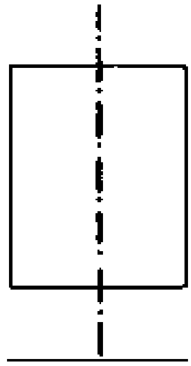

SIDE-VIEW B-B

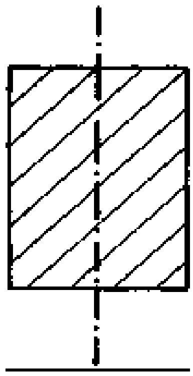

CROSS-SECTION C-C

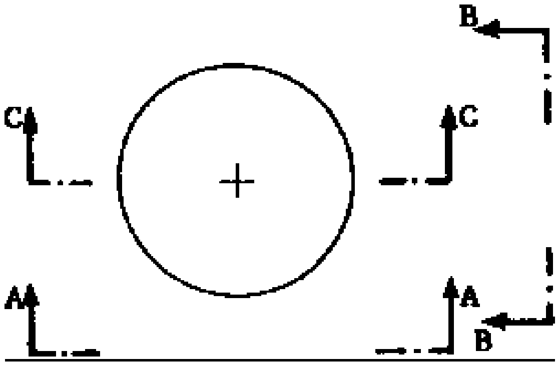

LAYOUT PLAN D-D

4. Concrete Ring

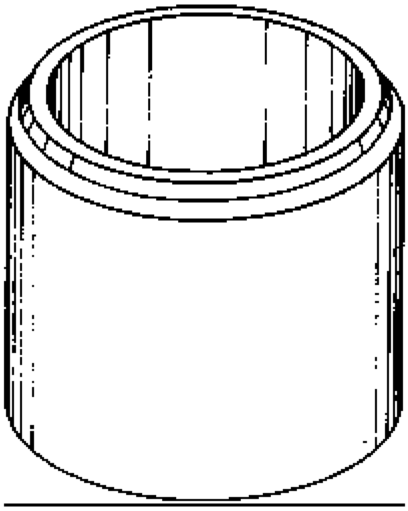

ISOMETRIC VIEW of object

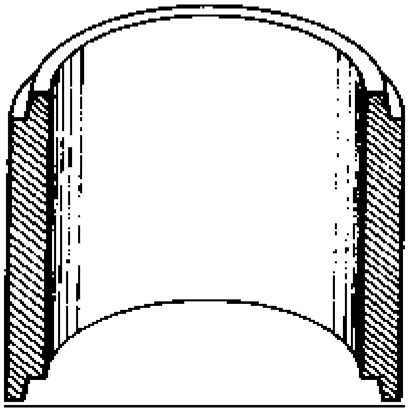

ISOMETRIC VIEW of half

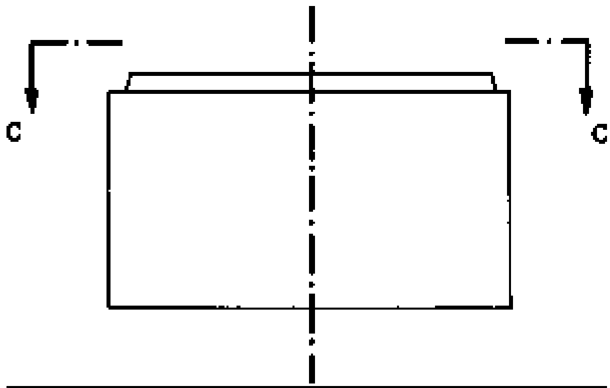

SIDE-VIEW A-A

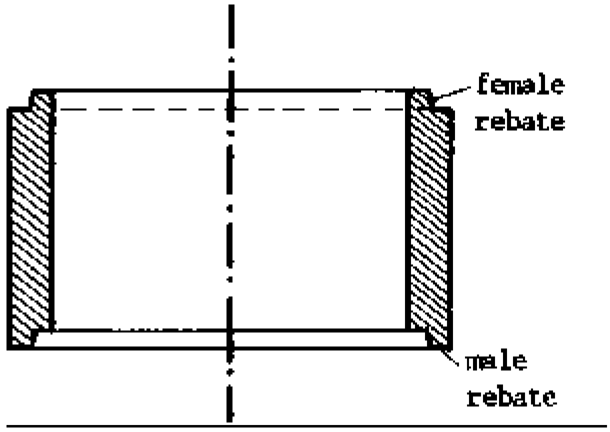

CROSS-SECTION B-B

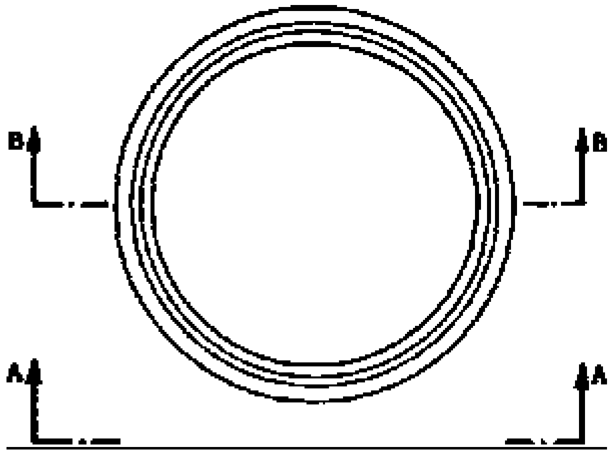

LAYOUT PLAN C-C

2. Two Cuboids

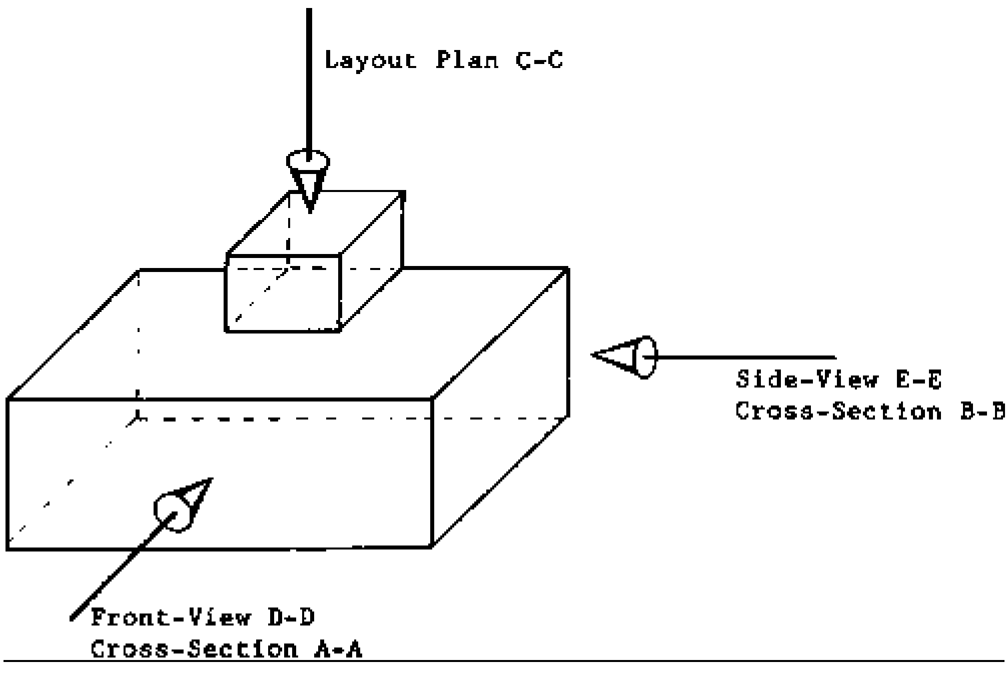

ISOMETRIC VIEW

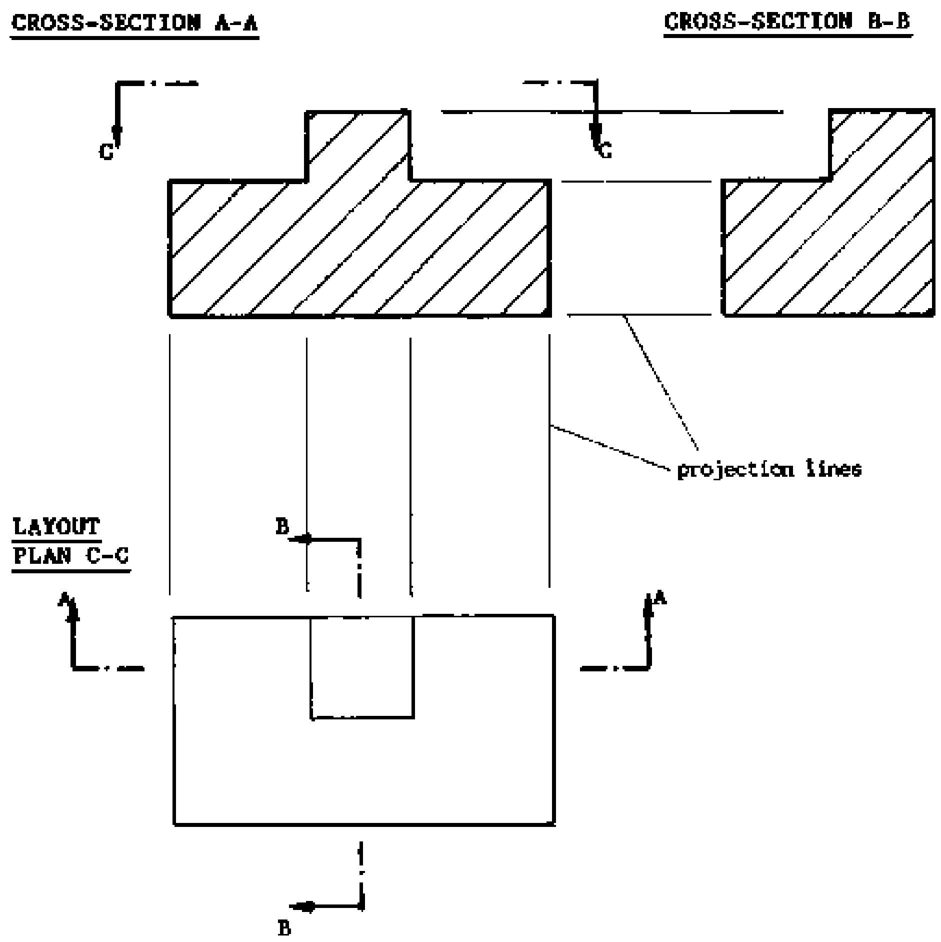

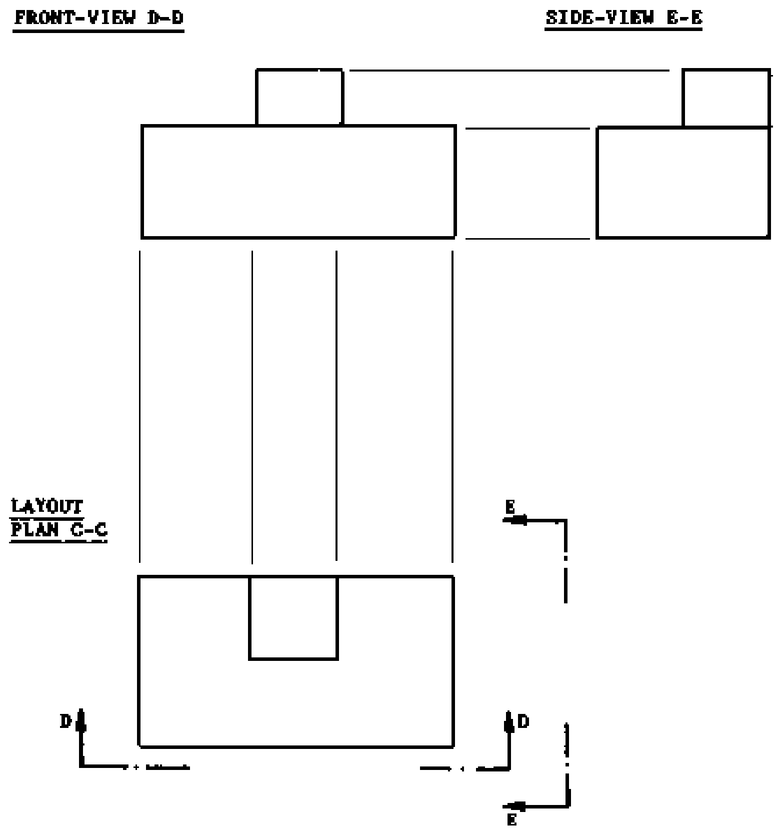

3. Two Cuboids with Cut-Out

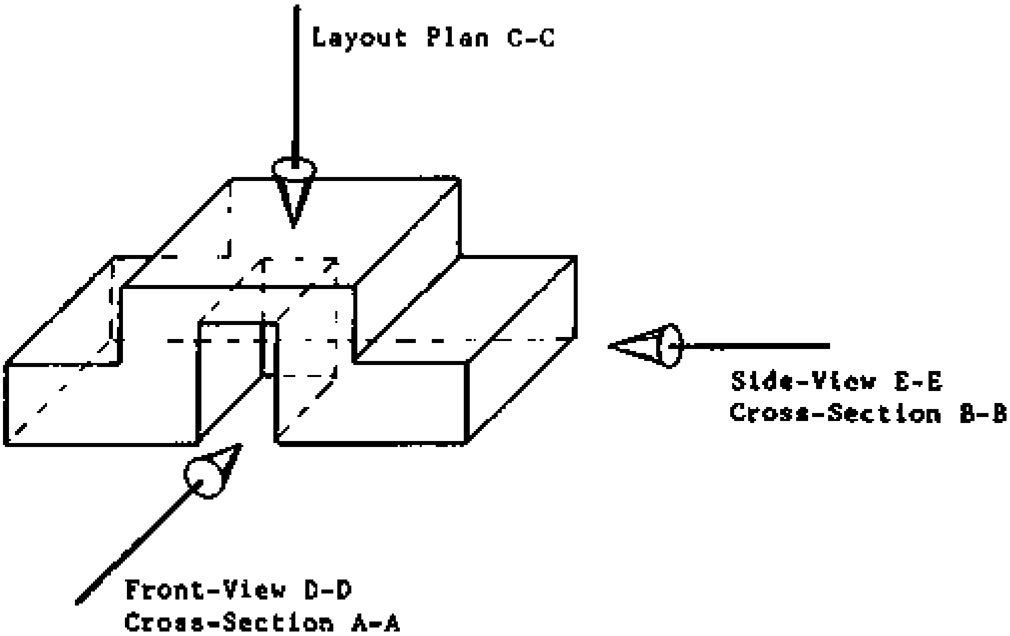

ISOMETRIC VIEW

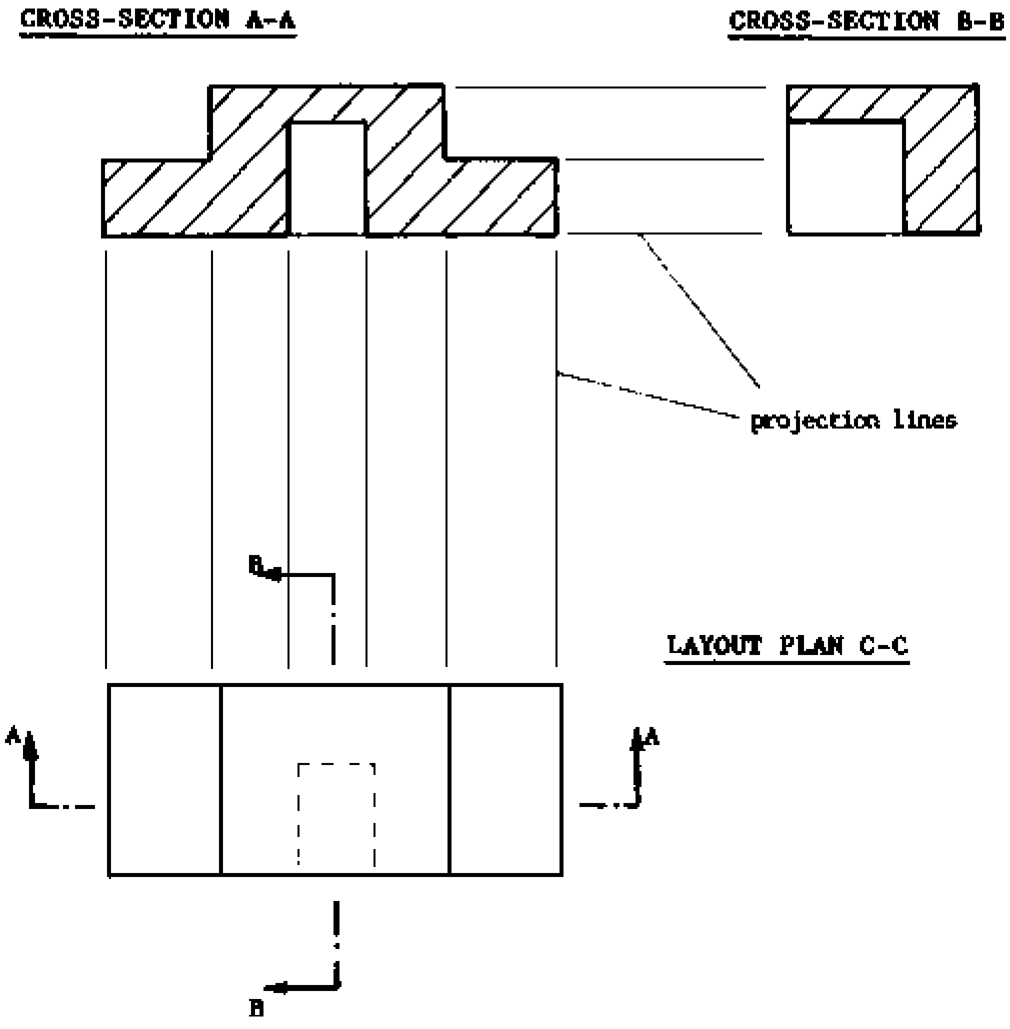

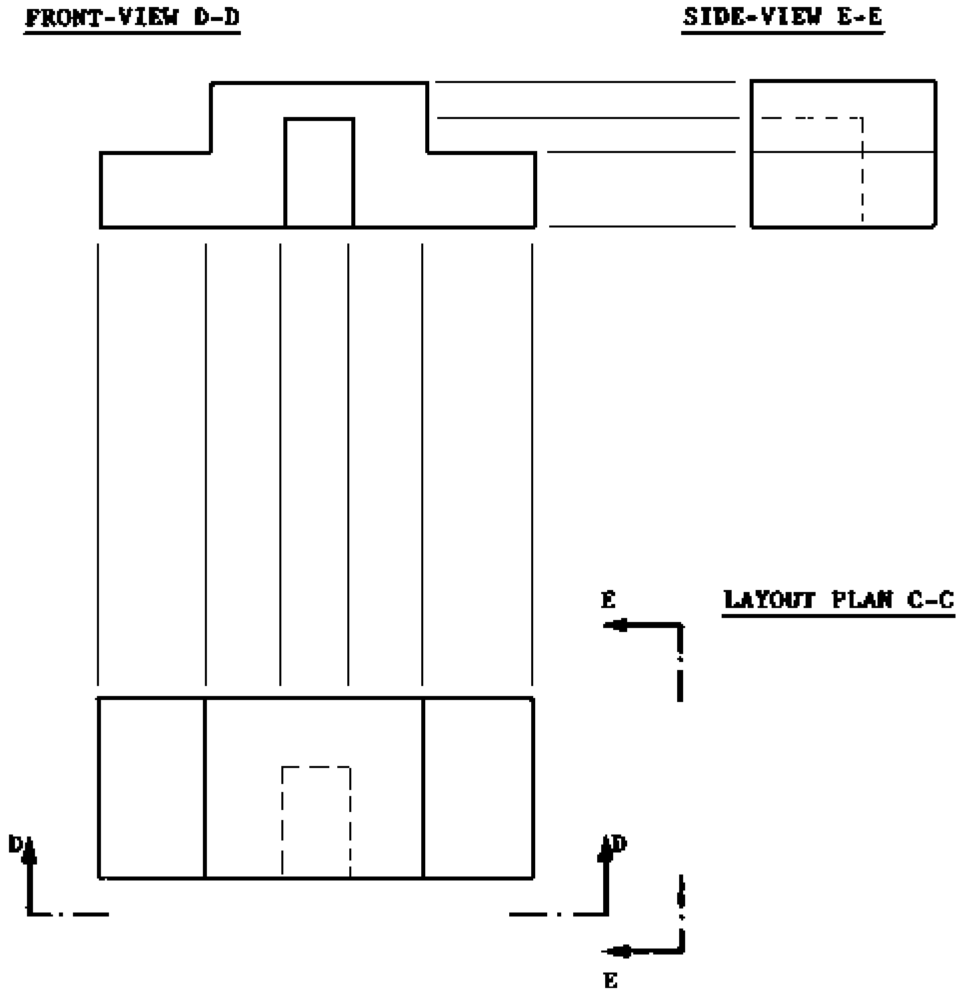
FRONT-VIEW D-D
SIDE-VIEW E-E
LAYOUT PLAN C-C
E
D
D
E

5. <u>Diverse Steel Profiles</u>

Profile	Isometric View	Cross-Section A-A	Cross-Section B-B	Side-View C-C
rod	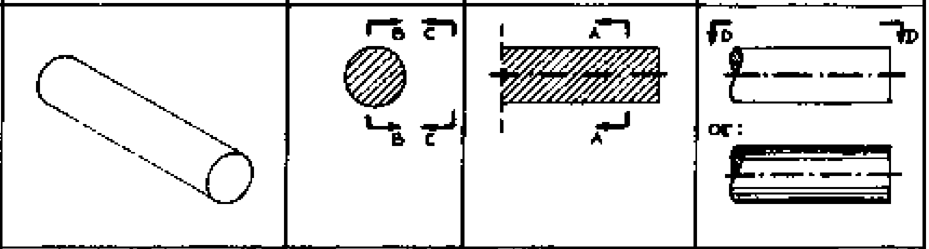			
pipe	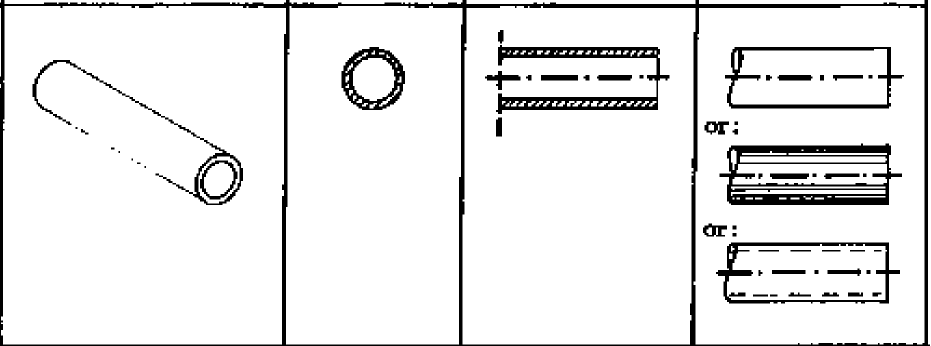			
square pipe	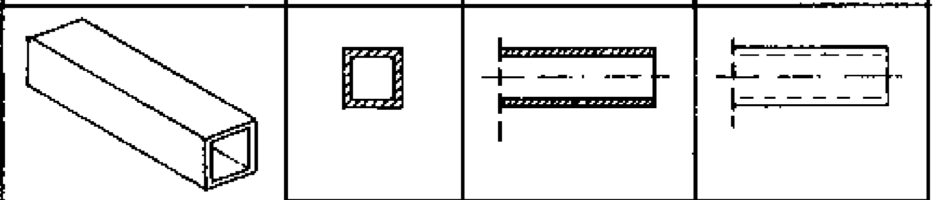			
steel channel	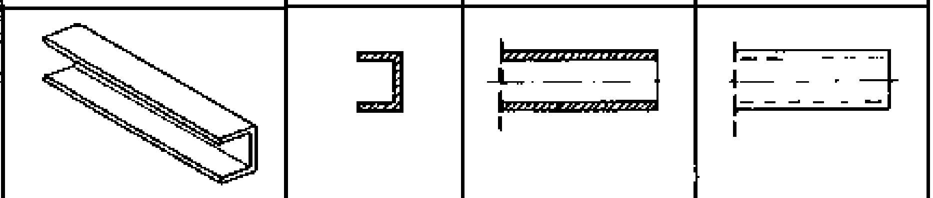			
equal angle steel	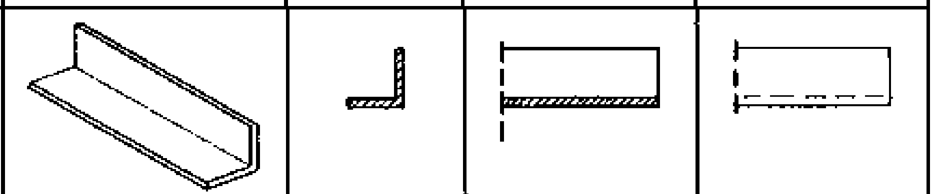			
I-steel	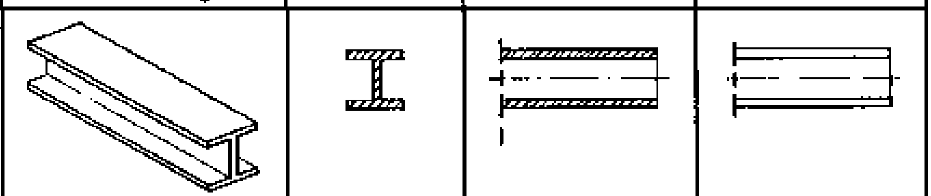			
Tee steel	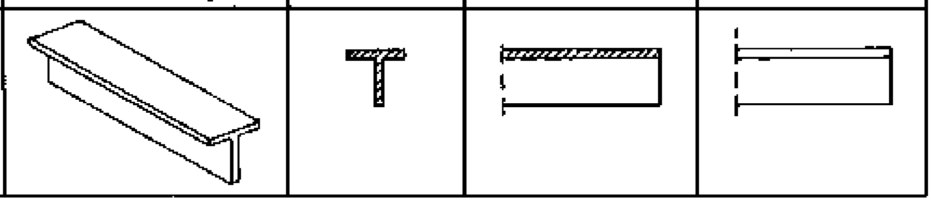			

What do the different profiles look like in a layout plan D-D?

6. Ball

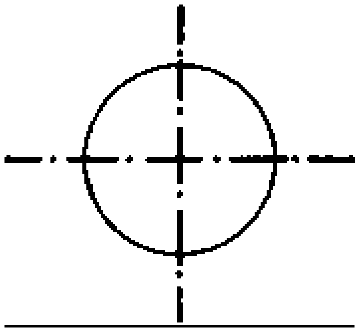

SIDE-VIEW

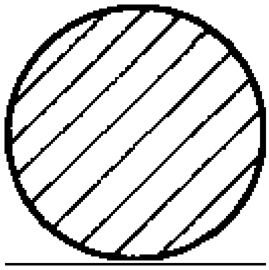

CROSS-SECTION

7. Bolt and Nut and Washer

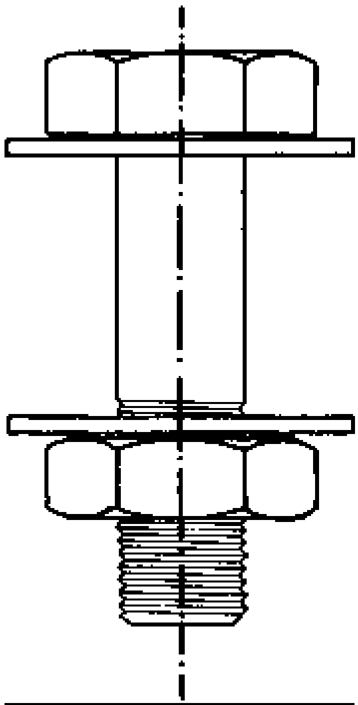

SIDE-VIEW A-A

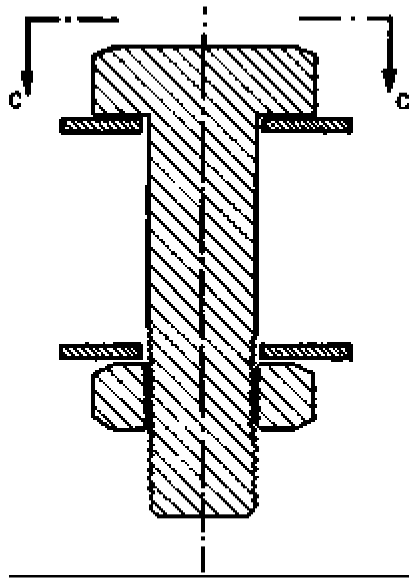

CROSS-SECTION B-B

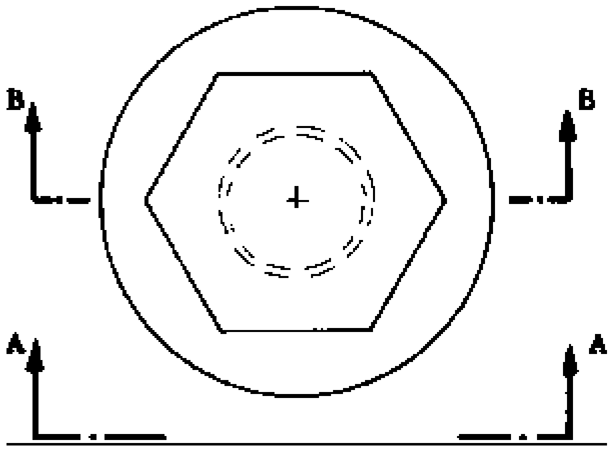

LAYOUT PLAN C-C

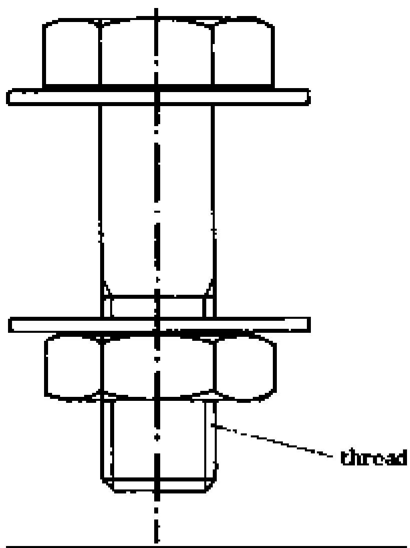

SIDE-VIEW A-A in different way

8. Reinforced Beam

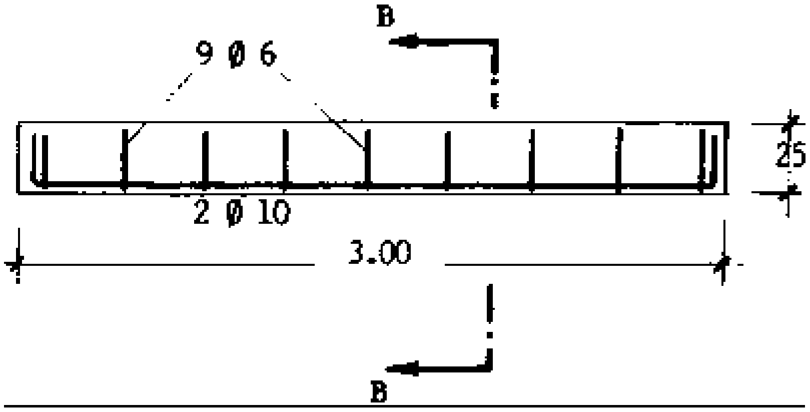

SIDE-VIEW A-A (1:40)

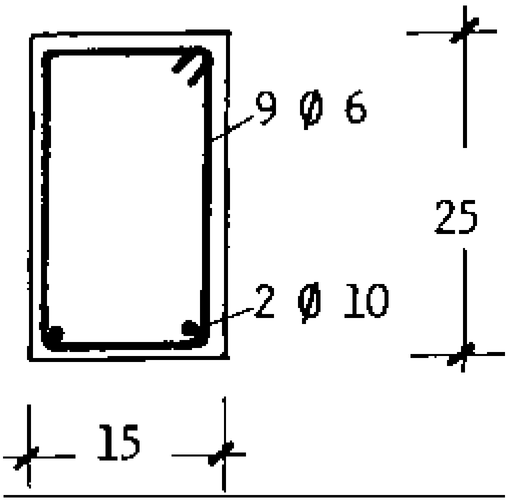

CROSS-SECTION B-B (1:10)

The cross-section is not hatched in order to show the reinforcement clearly.

LAYOUT PLAN C-C (1:40)

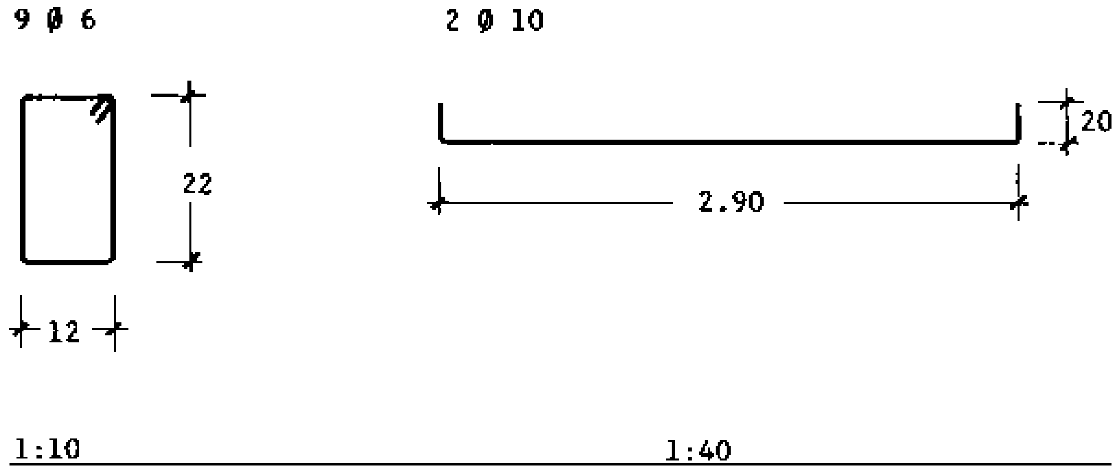

REINFORCEMENT (1:10)

9 Ø 6 stands for 9 pieces reinforcement, diameter 6 mm.
2 Ø 10 stands for 2 pieces reinforcement, diameter 10 mm.

K) Drawing of Rotational Symmetric Parts

For rotational symmetric parts side-view and cross-section are often united in one drawing, taking half of each. This saves drawing work and space, but still provides complete information. See the following examples.

1. Bolt and Nut and Washer (compare with 6.1/17)

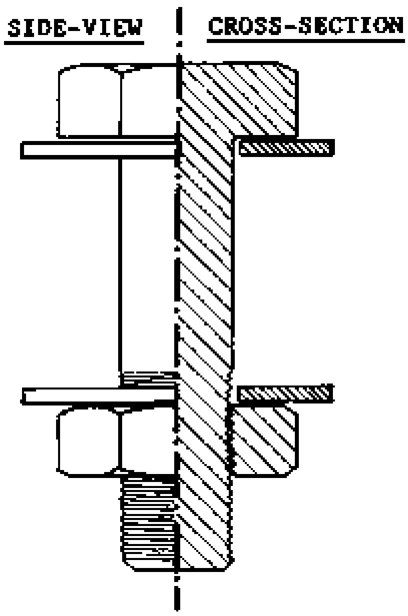

The nut itself is not rotational symmetric but still can be drawn like this, because it is clear what a nut looks like.

2. Concrete Ring (compare with 6.1/11)

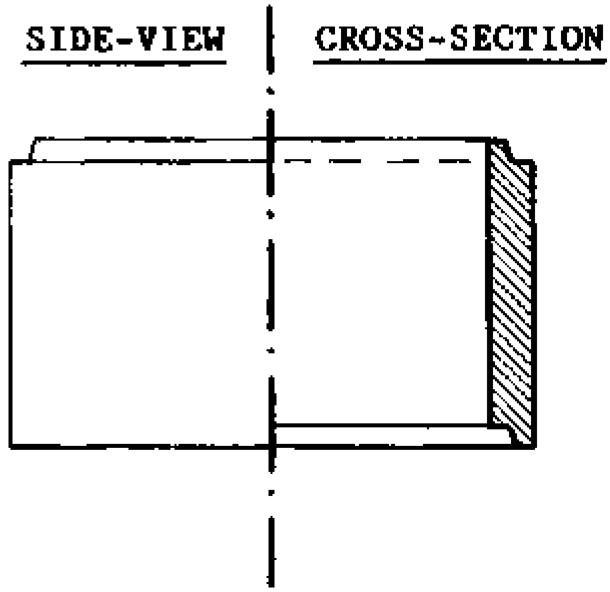

3. Pump Piston

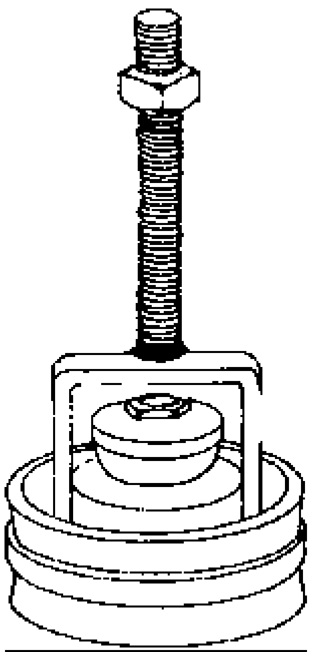

ISOMETRIC VIEW

SIDE-VIEW **CROSS-SECTION**

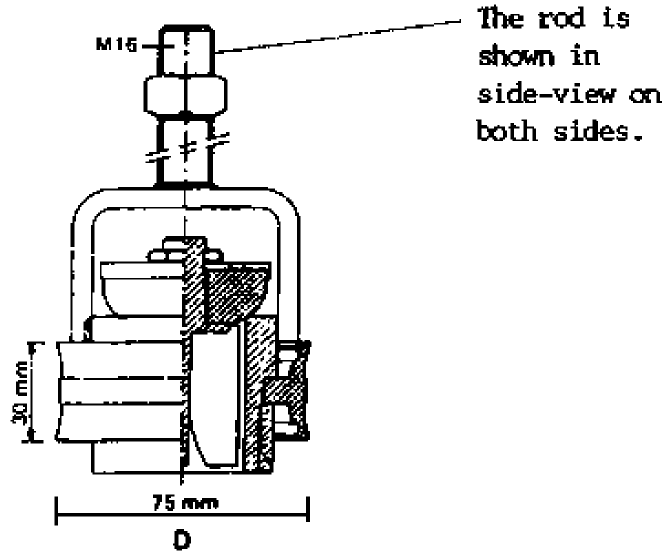

L) Exploded Diagram

Exploded diagrams are mainly used in installation manuals and spare part drawings of pumps and other machinery. They show exactly how parts, bolts, nuts and washers have to be assembled. All the parts are drawn as if moved apart by an “explosion”. Thus each part can be clearly seen.

Thin, long chains ______________________ indicate where the part needs to be attached.

Exploded diagrams can be drawn as side-views or as isometric views.

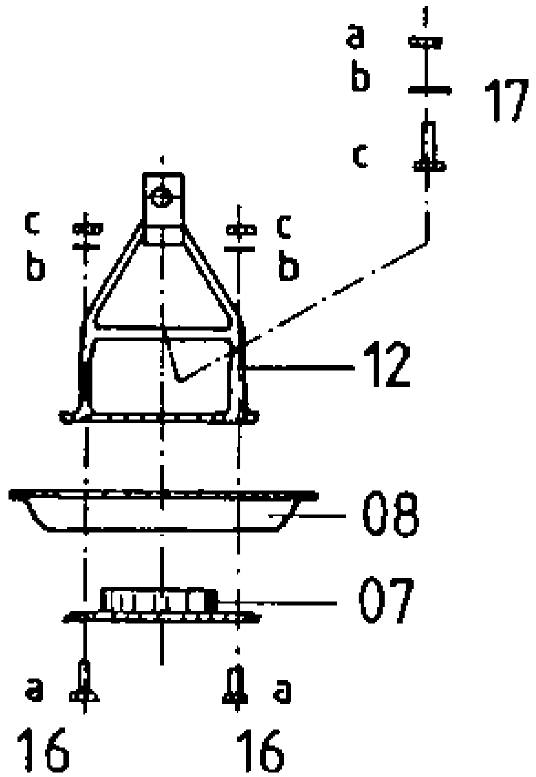

1. Exploded Diagram - Side-View (Part of Diaphragm Pump)

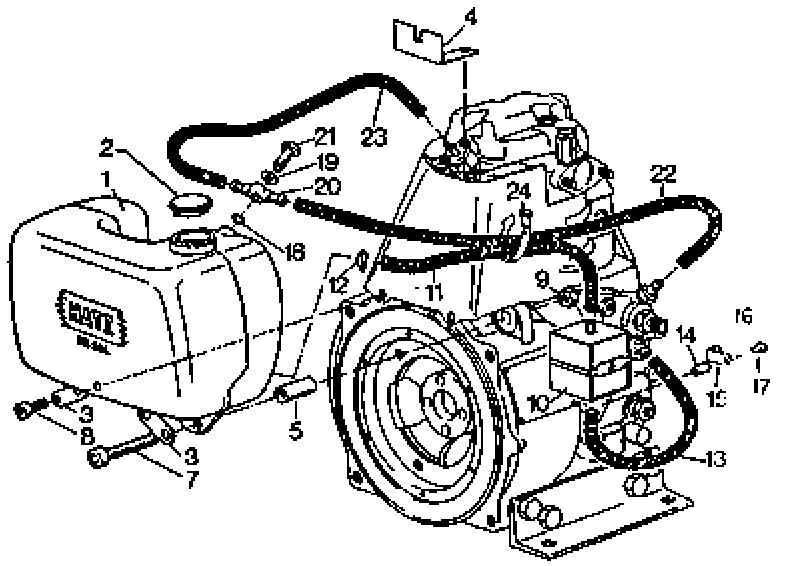

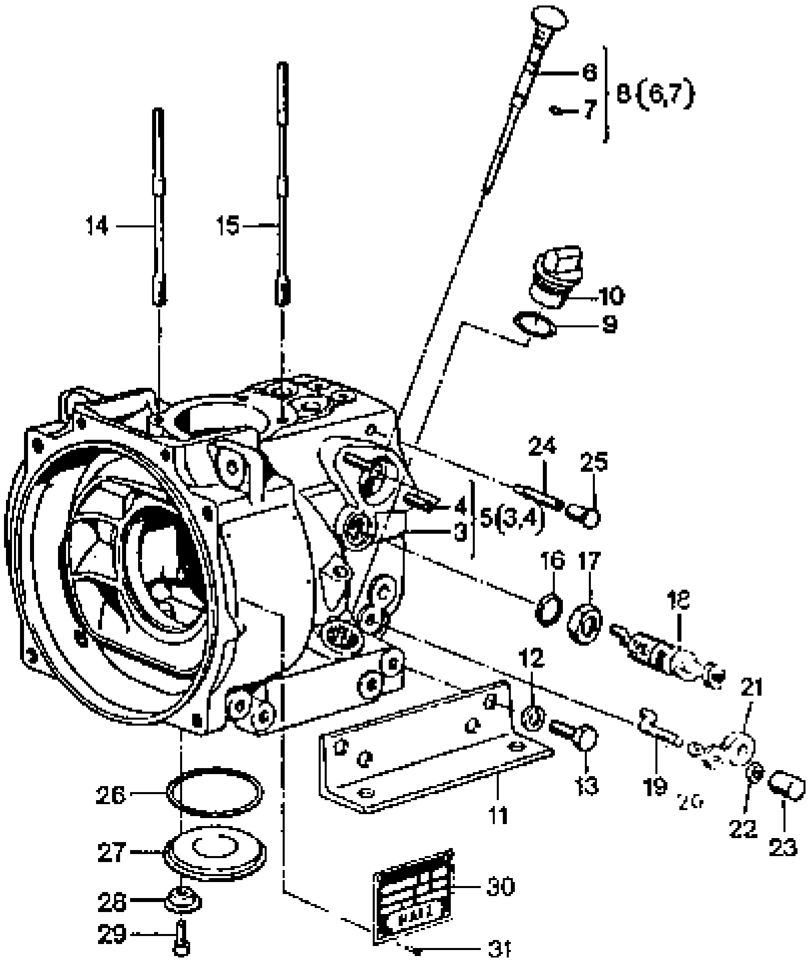

2. Exploded Diagram - Isometric View (Parts of Transportable Generator)

M) Cut-Away View with Hidden Inside Details

Sometimes the outside view of an object (side-view or isometric view) is used to show hidden inside details as well. To show these, part of the outside "skin" is shown as if removed. Imagine a banana being partly peeled, and you can see both outside skin and parts of the inside of the banana. The edges of the removed "skin" are usually drawn irregular.

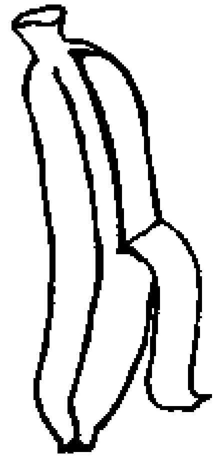

Example: Household Sand Filter

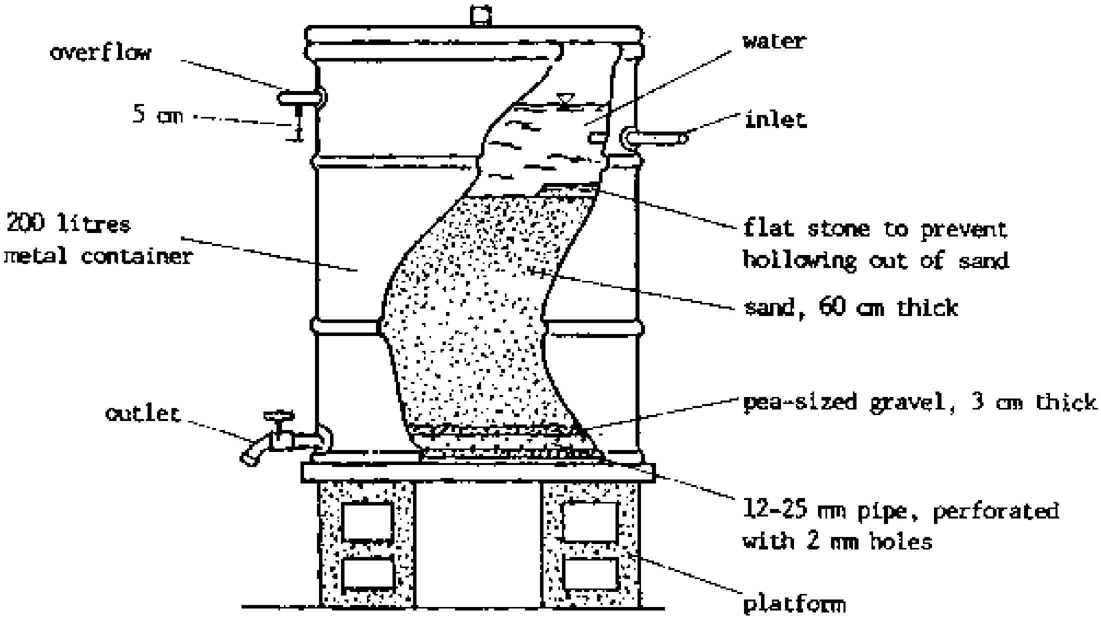

Cross-Section, Side-View, and Layout Plan of the same filter see 8.37/5

N) <u>Conventions for Technical Drawing and Technical Signs</u>

Conventions for technical drawing are fixed, agreed-upon signs used in technical drawings.

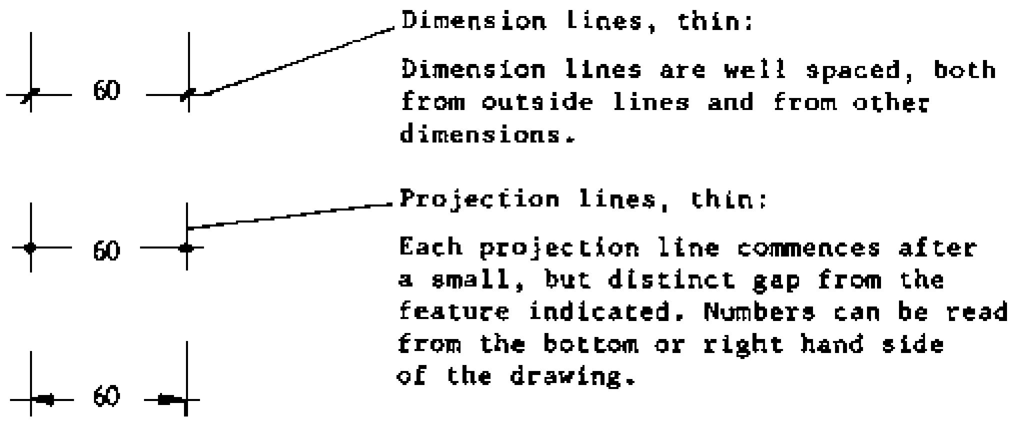

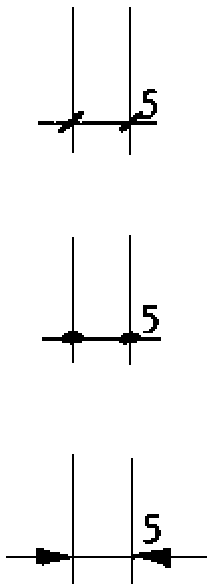

Small dimensions, thin

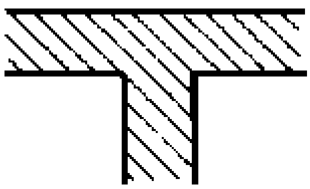

Cut wall, thick line, hatched

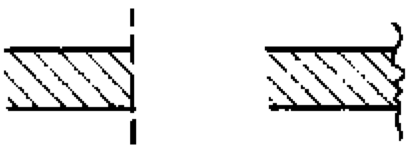

Boundaries, drawing not continued

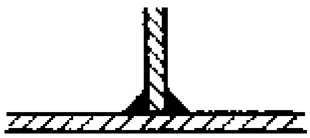

Welding in cross-section

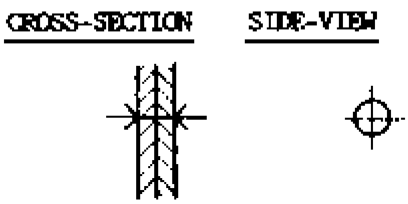

Connection of two pieces with bolt

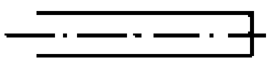

End of pipe in side-view

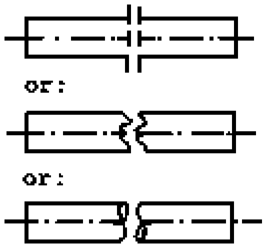

Interruption

Long chain, thick: Cutting planes for sections

Edges, thin

Short dashes, thin:

Hidden details, edges not to be seen. The first and the last dash of a hidden detail line should always touch the lines between which it is drawn.

Centre line of a rotational symmetric part:

Centre lines must project for a short distance beyond the outline of the feature to which they refer.

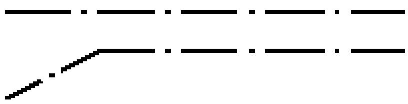

Thin, long chain: Direction of part on exploded diagram

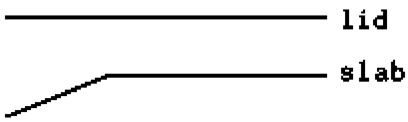

Line, indicating name or part No.

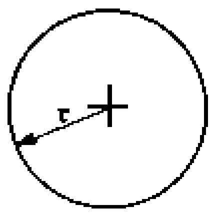

Radius and centre

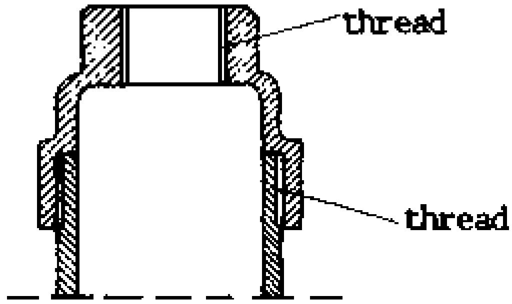

Two parts threaded together

Concrete (in cross-section)

Brickwork (in cross-section)

Sand or clay (in cross-section)

Rock (in cross-section)

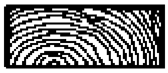

Timber (in cross-section)

Insulation (in cross-section)

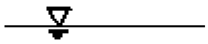

Water table

Ø

Diameter

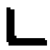

Equal angle steel

□

Square pipe

$\cong$

is roughly equal to

≡ or ≙

represents

≠

is not equal to

>

is bigger than

<

is smaller than

Light

Key or switch

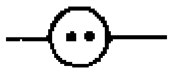

Socket and plug connected

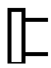

Plug with two connections

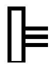

Plug with three connections

Plug with five connections

O) <u>Measurements and Scales</u>

Always indicate on the bottom of your plan: “All measurements in m.” or “All measurements in mm.” Write only the figures into the dimension lines, without the unit. Commonly, steel construction and machinery is measured in mm; concrete, brick and timber work in m and cm. In this case 60 means 60 cm, not 60 m; and 1.60 means 1.60 m and not 1.60 cm.

The measurements in this manual are mostly indicated like the latter, in cm and m.

Indicate also the scale on the bottom of your plan.

The most common scales are:

1:10 means: 1 cm on the plan = 10 cm in reality = 0.10 m in reality
1:20 means: 1 cm on the plan = 20 cm in reality = 0.20 m in reality

1:50 means: 1 cm on the plan = 50 cm in reality = 0.50 m in reality
1:100 means: 1 cm on the plan = 100 cm in reality = 1.00 m in reality
1:200 means: 1 cm on the plan = 200 cm in reality = 2.00 m in reality

You can calculate the scales as follows:

$$\text{scale} = \frac{\text{length on plan}}{\text{length in reality}}$$

1. <u>Example</u>

How long do you draw 5 m in scale 1:20?

$$\frac{1}{20} = \frac{x}{5\,\text{m}}$$

$$x = \frac{5\,\text{m}}{20} = 0.25\,\text{m} = 25\,\text{cm}$$

2. <u>Example</u>

2.5 cm on a plan in scale 1:50 represents which distance in reality?

$$\frac{1}{50} = \frac{2.5\,\text{cm}}{x}$$

$$x = 2.5\,\text{cm} \times 50 = 125.0\,\text{cm} = 1.25\,\text{m}$$

6.2 Marking Rectangular Layout Plan

Many buildings are planned to be rectangular. It is very important that they are built in true rectangular shape with 90° angles at each of the four corners. If the walls are out of the rectangular shape, you will face difficulties when placing slabs, roof trusses, zinc sheets, roofing sheets, floor tiles, etc., later on. If the walls are rectangular, these parts will fit without any further adjustment. If not, lots of tiresome cutting or other manipulations will be necessary. Therefore, it saves time in the long run to spend efforts on the correct layout. The walls must be laid out correctly in the first place and the shape must be checked regularly.

There are two ways to mark a rectangular layout plan:

A) <u>3-4-5 Method</u>

This method is based on the Pythagoras theorem (see 5.5/1)

$\boxed{a^2 + b^2 + c^2}$

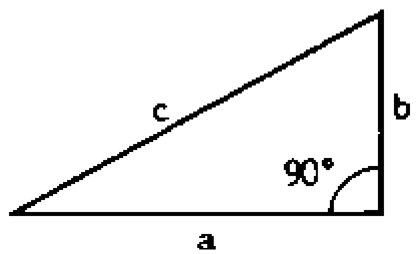

The numbers 3,4 and 5 fulfil the Pythagoras theorem:

$3^2 + 4^2$	$= 5^2$
$9+16$	$= 25$ ✓

This equation can be multiplied by any number on both halves of the equation and still fulfil the theorem, e.g.

$(3^2 + 4^2) \times 4$	$= 5^2 \times 4$
$3^2 \times 4 + 4^2 \times 4$	$= 5^2 \times 4$
$(3 \times 2)^2 + (4 \times 2)^2$	$= (5 \times 2)^2$
$6^2 + 8^2$	$= 10^2$
$36 + 64$	$= 100$ ✓

or

$(3 \times 0.50)^2 + (4 \times 0.50)^2$	$= (5 \times 0.50)^2$
$1.5^2 + 2.0^2$	$= 2.5^2$
$2.25 + 4.0$	$= 6.25$ ✓

Any triangle with the sides 3,4,5 or any multiples of 3,4,5 is a right angled triangle.

This connection is applied for marking a rectangular layout plan as follows:

1. Place "corner profiles" outside the four corners of the planned building.

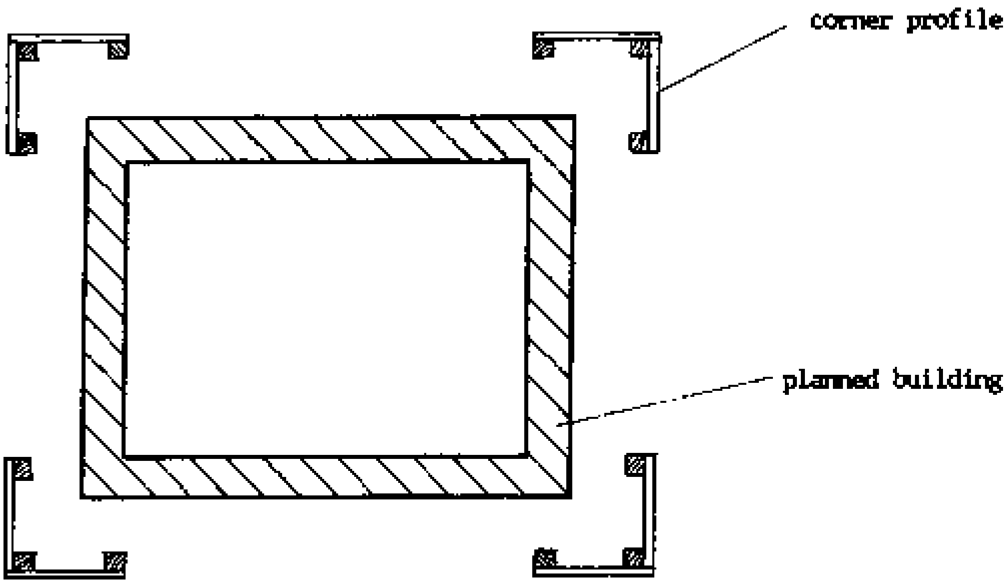

Make the corner profile itself right angled with the help of a carpenter's square.

2. Put the corner posts of the profile into concrete to prevent movement.

3. Mark the first side of the building by connecting a line between a nail on one corner profile to a nail on the opposite corner profile.

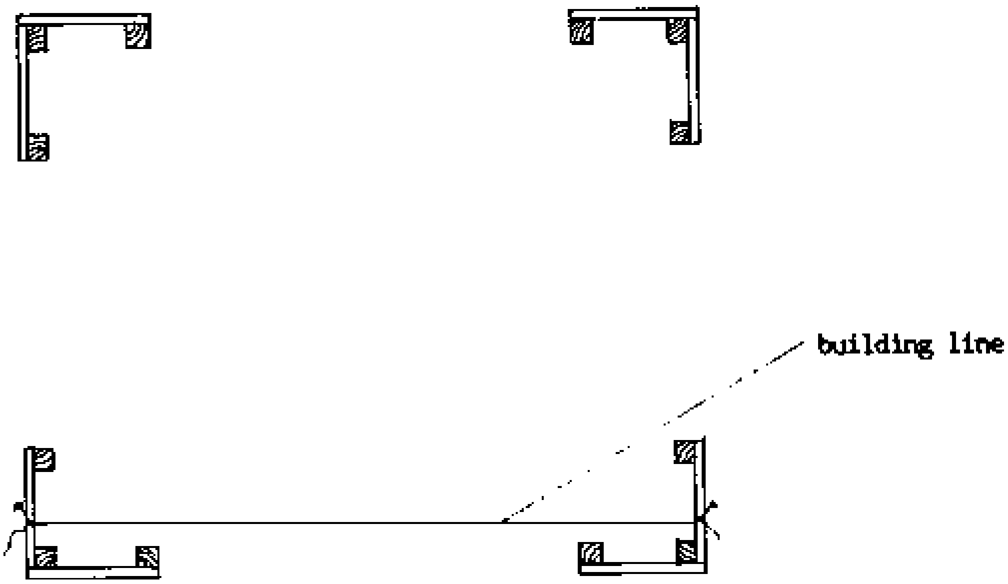

4. Create a second line crossing the first one using the 3,4,5 method. Mark 3 units (e.g. 3 × 0.50 m = 1.50 m) along one side with a string, mark 4 units (e.g. 4 × 0.50 m = 2.00 m) along the other side. The angle is 90° if the distance between the two marks is 5 units (e.g. 5 × 0.50 m = 2.50 m). Fix the line with nails.

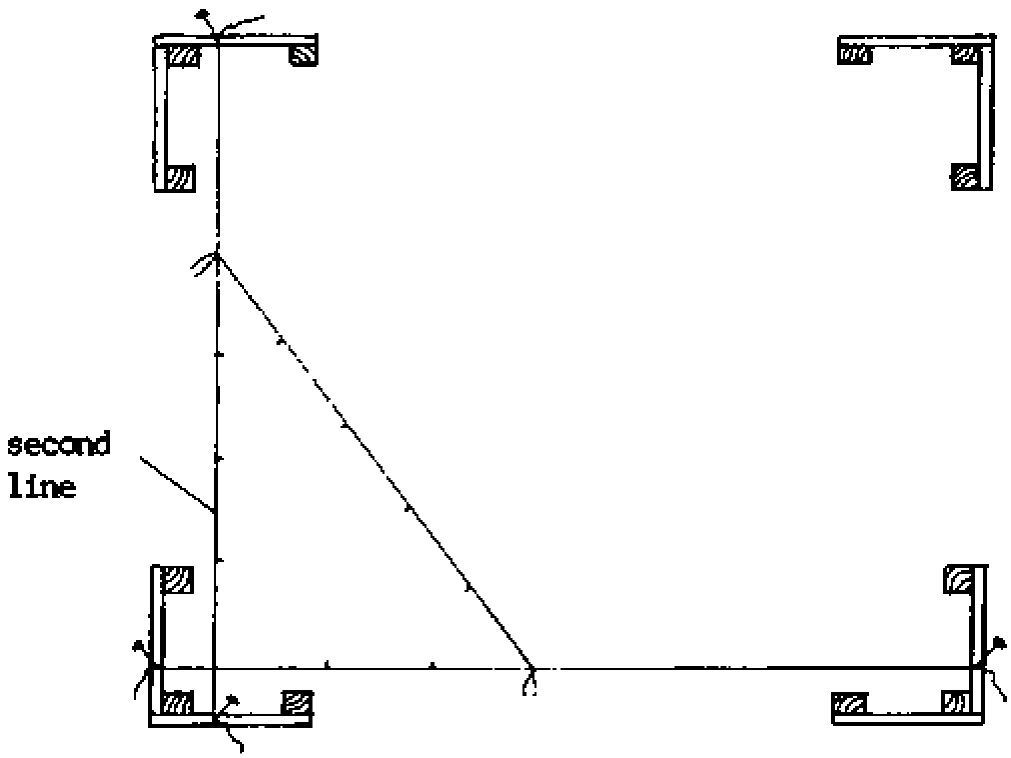

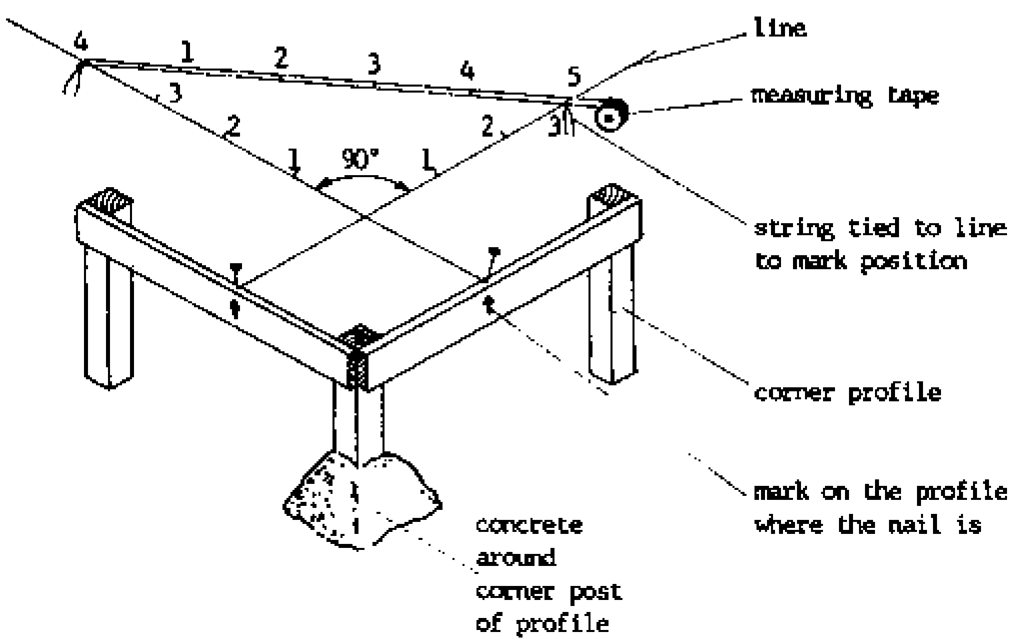

5. Connect all four sides like this taking care that the length of the sides is according to plan.

6. Check to see if the sides of the rectangle are according to plan and if the two diagonals are equal.

7. Mark the nails which indicate the layout plan to avoid confusion.

8. Plumb the layout on the ground with a plumb bob.

9. Remove the lines during construction and connect them again whenever you need measurements.

B) <u>Method Using Diagonal</u>

This method is useful for marking on level ground or on a cast (= poured) concrete floor. For example, you may mark the layout on cleaned and level ground and erect corner profiles afterwards (see A). The method is to be used as follows:

1. Calculate the diagonal of the rectangle with the given sides (see 5.5/1).

Example:

long side	1.90 m
short side	1.60 m
diagonal	2.485 m

2. Mark the long side of the rectangle (1.90 m) with nails (A) and (B).

3. Use a measuring tape stretched from corner (A) to create a diagonal that is 2.485 m long. This diagonal now becomes the radius of a circle drawn around (A) with a nail on the ground.

4. Repeat the method in number 3., using a radius that is 1.60 m long (the short side of the rectangle) around corner (B).

5. The intersection (= crossing point of the lines) of the two circles is the third corner (C). Mark it with a nail.

6. Repeat the method in number 3., using a radius that is 1.90 m long (the long side of the rectangle) to draw a circle around the third corner (C).

7. Draw a circle with the short side (1.60 m) around the first corner (A).

8. The intersection of the two circles is the fourth corner (D). Mark it with a nail.

9. Check if all the sides have the correct size.

10. Check if both diagonals are equal.

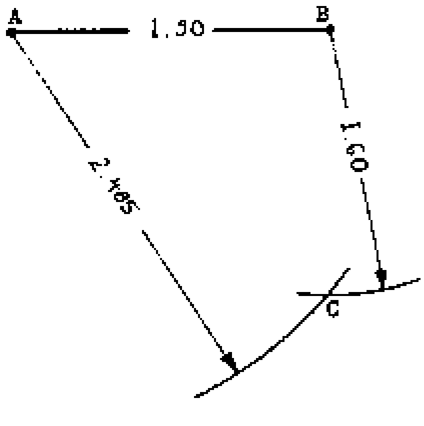

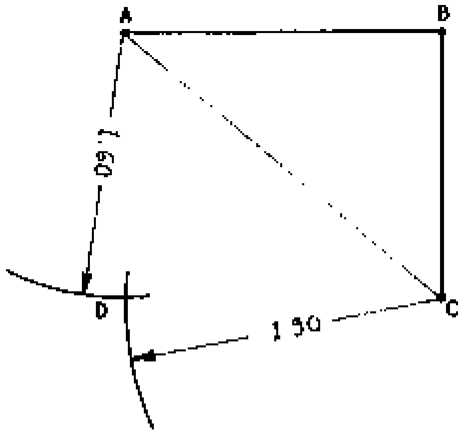

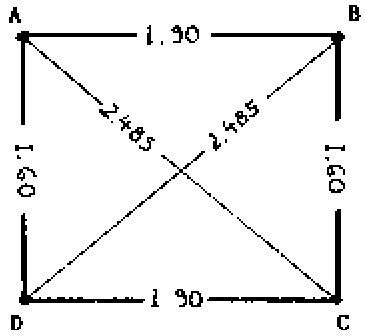

This method is very quick once the diagonal is known, and saves you difficult trial and error and corrections.

C) <u>Checking the Rectangular Shape during Construction</u>

The rectangular shape of the walls must be checked regularly (at least every metre). Always check the following <u>two</u> points:

1. Check if the length of the sides is correct.
2. Check if the two diagonals are equal.

The shape is rectangular only if <u>both</u> conditions are fulfilled. If not, make corrections; it may be tolerated if the diagonals differ by 1 cm, but not if they differ by 4-5 cm.

6.3 Tools

Tools are essential for good craft work. The technician must have a basic knowledge about tools in order to be able

- to select the suitable tools when purchasing,

- to use the correct tools for each purpose,

- to handle each tool in the right way to ensure optimal work and to avoid unnecessary damage,

- to maintain each tool properly to ensure its long life.

The most basic information about these points is collected in the chapter for the following kinds of tools (used in well construction and latrine building):

- general tools,
- special tools for concrete and brickwork,
- special tools for wood work,
- special tools for metal work.

Only the most basic tools of these groups are compiled here, because the purpose of the chapter is to give a first introduction about tools for a technician trainee, completely new in the field. She/he is introduced into the new vocabulary and has to learn the names, functions and proper handling. Add the local names by yourself. When the technician is acquainted with the tools compiled here, she/he needs to deepen her/his knowledge by further studies in tools' catalogues and literature and by asking experienced people.

The full names and, if existing, several ones are listed. These names are <u>not necessarily</u> the suitable ones for recording in the store. For example, a "square file", as listed here, is better recorded in the store as "file, for metal, square"; a "triangular file" is recorded as "file, for metal, triangular"; etc. Thus, the stock cards of all different files will be close to each other according to the alphabetical order (see also 7.9/1).

A) <u>General Tools for Different Purposes</u>

No.	Drawing	Name(s)	Description	Function	Remarks
1	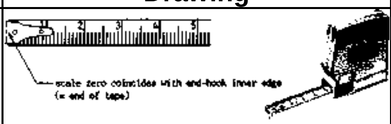	measuring tape 2m, 5m = tape measure 2m, 5m = meter 2m, 5m = pocket measuring tape	with steel tape in enclosed metal case with spring return; graduation metric and inch	for measuring short distances in carpentry and concrete work or brickwork	for reading the meter see 6.4/5f; prevent tape from getting wet; if wet, dry immediately and oil it; prevent folds
2	Different alternatives for tape zero positions 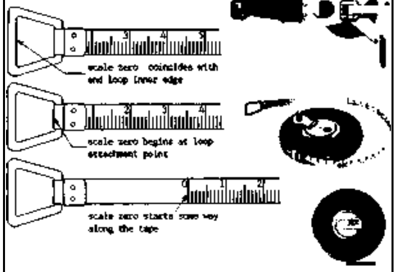	measuring tape 10m, 20m, 50m = tape measure 10m, 20m, 50m = meter 10m, 20m, 50m	steel, glass fibre or cotton tape in plastic frame with grip or in capsule with fold-away rewinding handle; sometimes plumb-loaded	for measuring long distances; for marking layout plans; for measuring well depth	rewind accurately; never rewind tape when it is wet; for reading the meter see 6.4/Iff

No.	Drawing	Name(s)	Description	Function	Remarks
3	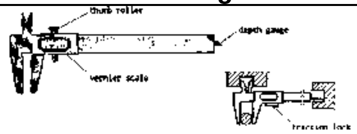	caliper = vernier caliper	from polished steel, with knife-edged jaws for internal/external measurements and depth gauge; graduated in mm with vernier scale to read 1/10 mm; with thumb roller or friction lock	for measuring inside/outside diameters of pipes and internal/ external measurements and depth of grooves	for measuring, hold the caliper against the object as shown in the drawing; use the vernier scale if you want to read 1/10 mm
4		spirit level = carpenter's level	from wood or steel, with two vials, one level and one plumb; the vials are from glass filled with ether; a bubble can be seen	for levelling and plumbing short distances; see 6.4/9f	steel spirit levels are more sensitive on sun; never leave a spirit level in the sun!, once spoilt by heat, it cannot be repaired; check the spirit level for its accuracy on every possible occasion
5	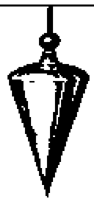	plumb bob = engineering bob	from iron with brass knob and plumb line	for plumbing, especially in deep wells	for using the plumb bob see 6.4/11; never knot the plumb line!
6	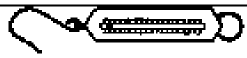	spring balance	Tandy scale, with hook and spring	for rough measuring of kg	hang the weight to be measured on the hook and read the scale; might not be exact after some time
7	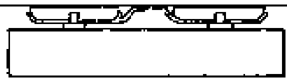	balance	with two bowls, to be used with weights	for exact measuring of weights	
8	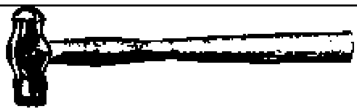	blacksmithing hammer	one end rounded, the other flat	for blacksmithing	for all hampers: if loose, fix the head immediately with handle wedges (see No.12,6.3/6)

No.	Drawing	Name(s)	Description	Function	Remarks
9	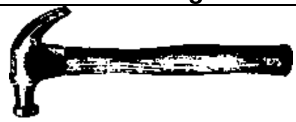	carpentry hammer	with round, crowned face and split neck	for carpentry work	the neck is suitable to extract nails
10		bricklayer's hammer	square face, the other end sharp for cutting bricks	for bricklaying	
11		sledge hammer	square face and sharp end or double square face, differentiated according to weight	for heavy duty work	the handle must be fixed well
12	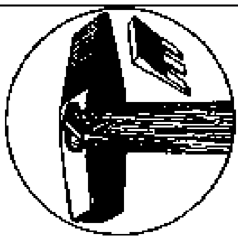	handle wedges = hammer bolsters	three-pronged wedges from steel	to fix the handle of a hammer	the handle must tightly fit the hole; additionally, hammer the wedge into the handle from above
13	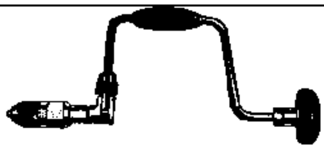	breast drill = drill brace = carpenter's brace	with four jaws; with eight-tooth ratchet and ball bearing head	for drilling holes in wood	for square shank bits; lean against the breast drill to improve drilling
14	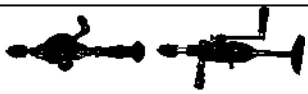	hand drill	with three-jaw chuck, handles, two gears	for drilling holes in metal, wood, etc.	for round shaft bits
15	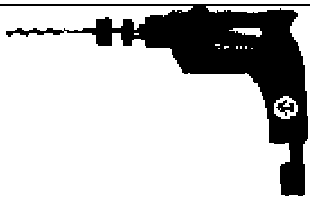	drilling machine = rotary drill = portable drill	electrical machine with three-jaw chuck, with key for opening the chuck, electrical cable and plug	normal drilling for wood, metal, etc., marked with ; percussion drilling for stone, concrete, marked with 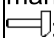; percussion means that the bit drills <u>and</u> taps against the object	for round shaft bits; start the machine before touching the object; drill straight

No.	Drawing	Name(s)	Description	Function	Remarks
16		drilling bit for stone = masonry drill = concrete drill	with round shank for hand drill or electrical drilling machine; the tip has a hard metal or carbide edge	for drilling brick, stone, concrete, glass, etc.	never use lubricants! the drill should be withdrawn regularly to avoid overheating
17		drilling bit for metal = twist drill	with round shank for hand drill or electrical drilling machine	for drilling metal	avoid blue coloured metal chips by reducing drilling speed; blue colour indicates overheating
18		drilling bit for wood = lamp base drill	with centre tip and side cutters, with round shank for hand drill or electrical drilling machine	for drilling small diameter holes in wood	first press the tip against the wood, then start to drill
19	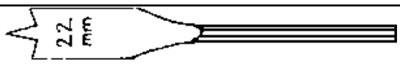	centre bits	with round shank for hand drill or electrical drilling machine	for drilling large diameter holes in wood	see above
20	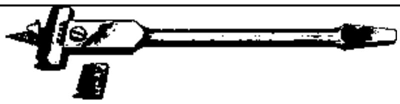	expansive bits	with square or round shank for all types of drills	for drilling large diameter holes in wood	see above; the bit is adjustable to any diameter
21		drilling bits for wood = solid centre auger bits	with square shank for breast drill, screw tip and feed screw	for drilling wood	see above
22		pickaxe	From steel, with one broad sharp and one pointed end and wooden handle	for loosening hard soil when digging	the handle must not move in the pickaxe
23	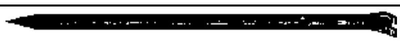	crowbar	thick iron bar with one pointed and one split or sharp flat end in different sizes	for digging pits or wells	keep the edge sharp

No.	Drawing	Name(s)	Description	Function	Remarks
24	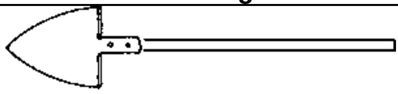	shovel	metal shovel with tip and long wooden handle	for lifting sand, earth, gravel, concrete, etc.	wash the shovel always immediately after work
25	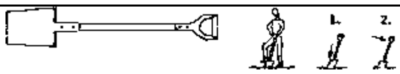	spade	shovel-like tool, but with straight edge	for cutting and digging into soft soil with additional help of the foot	put your foot on the spade and press it into the soil with the help of your body-weight; then take the cut soil out using the spade as a lever
26		wheelbarrow	with one tyre (full rubber or with inner tube), strong frame and two handles	to move loads	keep the wheelbarrow clean and well greased; can be made locally from timber
27		whitewash brush = chalk broom	soft nylon brittles in square wood with handle	for quick painting of large areas with whitewash	wash immediately after use
28		flat paint brush	light bristles with wooden handle; in different sizes, sane-times with bucket rest	for painting with all kinds of paints	never allow paint to dry on the brush, but clean it immediately after use
29	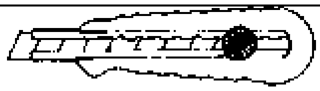	universal knife = break-off blade knife	pocket knife with sliding blade with plastic cover; the blade has perforations	for cutting nylon sheets, carton, etc.	break off the tip of the blade when not sharp; the new tip will be sharp
30		funnel	from plastic or metal, sometimes with sieve	for pouring fuel, etc. into small openings	
31	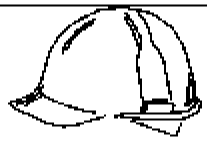	safety helmet	from plastic with rain gully; textile fittings, leather sweat-band, tape fastening	to reduce the risk of injuries from falling objects	always wear a safety helmet inside the well see 8.21

No.	Drawing	Name(s)	Description	Function	Remarks
32	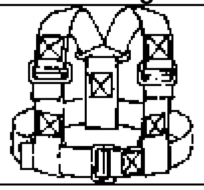	safety belt	with broad belts from nylon around chest and shoulders	for lifting and catching a person	use in all risky situations; see 8.21, 8.22
33	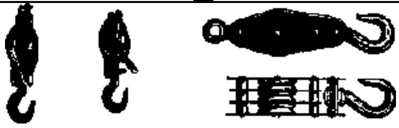	pulley = pulley block	with single or double or triple roll from steel, eye and hook; sometimes with hinged snatch for easy removal of a cable with a swivel hook on the end	for pulling ropes, steel cables, etc.	see 8.17/19; never use a pulley which is broken in any of its parts; grease regularly; avoid friction between rope and frame
34	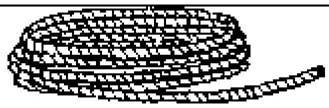	rope	from sisal, hemp or nylon, with different diameters	for pulling loads	for details see 8.23

B) Special Tools for Concrete and Brickwork

No.	Drawing	Name(s)	Description	Function	Remarks
35		trowels	from forged steel with wooden handle, in different shapes and sizes	for brick and concrete work; for spreading mortar; for rough cutting of bricks	for using the trowel see 6.7/10f; never allow mortar to get hard on the trowel
36	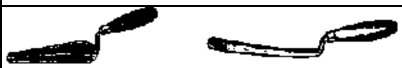	pointing trowel	thin trowel	for pointing and other fine work	see above
37	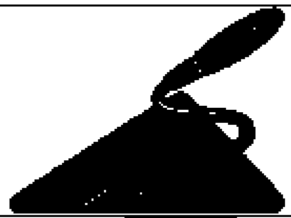	plasterer's trowel	triangle trowel	for plastering	see above
38	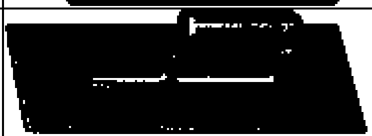	finishing trowel	square trowel	for smoothing and finishing plastering	see above
39		float	wooden smoothing trowel	for rough smoothing of (concrete) surfaces	can be manufactured locally
40	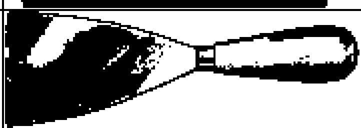	spatula	flat metal with handle in different sizes and shapes	for filling holes with gypsum and smoothening surfaces	

No.	Drawing	Name(s)	Description	Function	Remarks
41		bricklayer's line	nylon thread	for building a straight line	
42	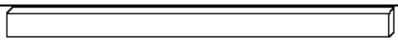	straight edge	from dry timber or steel	for making level floors	check the straight edge by looking along it; do not leave it in sun or rain
43	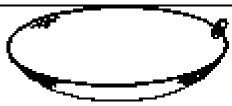	earth pan	locally made flat bowl from metal	for carrying mortar	never allow mortar to get hard on it, because it will increase its weight
44		bucket	from zinc or plastic	for carrying material	never use buckets with worn handles in wells
45	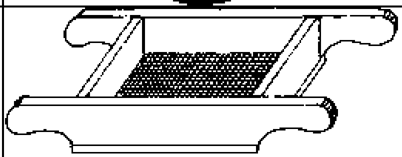	sieve	with wire mesh in different sizes in wooden frame	for sieving sand and gravel; see 8.20/1	sieve with two people
46		wrecking bar	from a steel bar; one end bent with a slot, the other end sharp	to be used as lever arm; for removing nails, shutters from concrete; for rough work	make full use of the lever arm
47	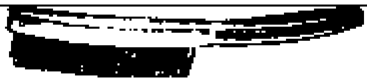	wire brush = steel hand-brush	brush with wire bristles and wooden handle in different sizes	for dry cleaning of tools and equipment	keep the brush dry
48	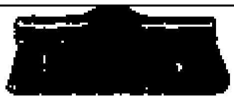	nylon brush = panel brush	brush with nylon (synthetic fibre) bristles in a wooden frame	for wet cleaning of tools and equipment	always clean tools immediately after work
49	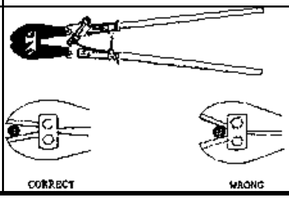	bolt cutter	with clipper cut jaws and exchangeable blades	for cutting reinforcement rods	place the bolt to be cut at the end of the blade to make full use of the lever arm

C) <u>Special Tools for Woodwork</u>

No.	Drawing	Name(s)	Description	Function	Remarks
50		cross-cut saw	long saw with big teeth and two wooden handles to be used by two people	for cutting logs into sawn timber	<u>for all saws</u>: never use force, but saw with speed instead and avoid bending the saw
51	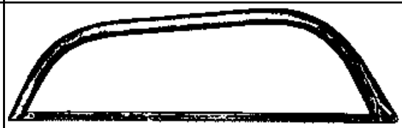	bow saw	made of oval steel tubing in the shape of a bow; the blade can be exchanged; with tensioning arm to put the blade under tension	for cutting logs, poles, rough work	cut by drawing and pushing motion but with very little pressure downwards
52	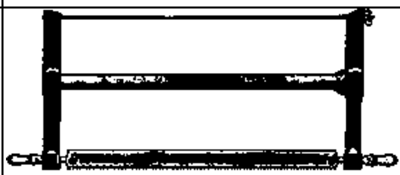	turning saw = joiner's bow saw	wooden frame with blade, handles, wire for tightening the blade	for cutting sawn timber; for exact work	fix the blade; tighten the wire and the blade by turning the adjusting nut
53	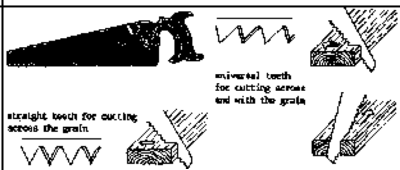	land saw	with straight teeth or universal teeth; with wooden or plastic handle; in different sizes	for cutting timber	see bow saw
54		tenon saw = dove-tail saw	with square blade and wooden or plastic handle	for cutting deep grooves into timber	
55	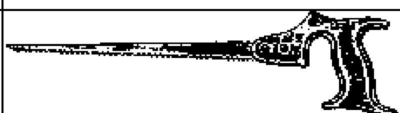	compass saw = keyhole saw	very thin blade with handle	for cutting small holes into timber	
56		plane	from steel or wood with handle and knob, smooth sole, blade and screw for adjusting depth of the cut	for smoothing wooden surfaces	always clean the surface of the timber to be planed; the blade must be sharp and straight; never use the plane with force

No.	Drawing	Name(s)	Description	Function	Remarks
57		rebate plane	plane with a special blade for a rebate	for cutting rebates	see above
58		spokeshave	with cap and single cutter	for smoothing and rounding curved surfaces	see above
59	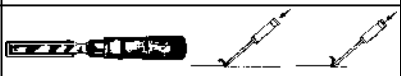	wood chisel	with sharp edge, a chamfered (= bevelled) blade and wooden handle	for cutting holes into wood	use a wooden mallet, never an ordinary hammer; sharpen the chisel often; do not use it as a lever arm; hold it as shown in the drawing
60	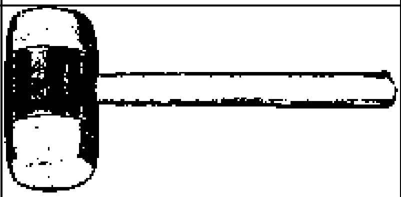	wooden mallet	special hammer from wood	for working with wood chisels	see above
61	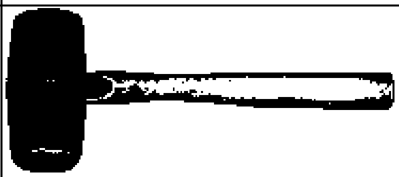	rubber mallet	special hammer from solid rubber with wooden handle	for hammering without damaging the object	
62	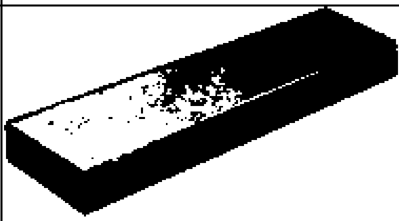	sharpening oil stone = hone stone	stone fixed in wooden box; combination stones are coarse on one side and fine on the other	for sharpening tools	sharpen with long, even movements; always use with oil; sharpen your tools often (after every half hour)

No.	Drawing	Name(s)	Description	Function	Remarks
63	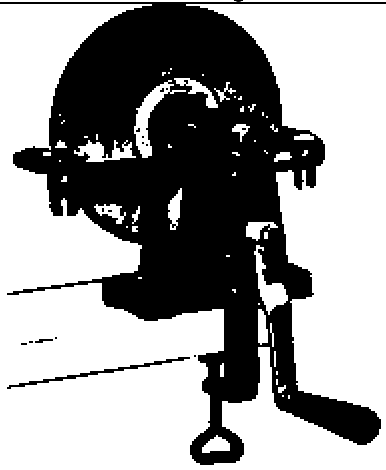	table grinder = bench grinder	hand operated grinder with grinding wheel	for sharpening tools	hold the tool to be sharpened against the turning grinding wheel, it must lay parallel and flat against the wheel; never use force
64	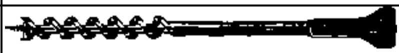	screw auger	auger with screw tip and opening for a handle	to drill large holes into wood without a machine	fix a handle in T-form and drill
65		wood rasp	with a series of pointed, individual teeth	for rasping wood, for coarse work in soft material	keep the rasp dry and clean
66	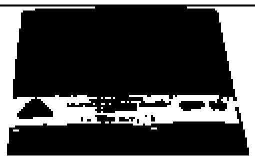	sand paper = flint paper = abrasive paper	strong paper coated with flint	for manual sanding of wood	put the sand paper around a piece of wood for proper grip
67	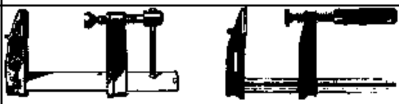	clamp	with bar of steel, strong jaws, a screw with plastic-ball jointed shoe and wooden handle, or steel T-handle; with short or long bar	for fixing a piece to the working bench or for pressing wooden frames together after gluing	push the jaws together on the pieces to be fixed, then screw the handle tight
68	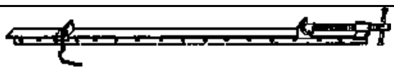	sash clamp	long clamp	for pressing door frames or other large objects together	push the jaws together on the piece to be fixed, place the pin into the next hole, then screw the handle tight

No.	Drawing	Name(s)	Description	Function	Remarks
69		work bench	with built in vices; with wood spindles	for carpentry work	locally made work benches can be equipped with a vice
70	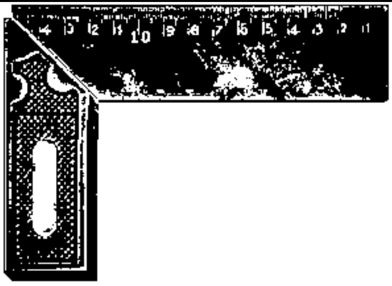	trysquare = square	metal square with right angle; with stock and blade	for marking right angles or 45° on timber	the stock must be well pressed against the timber when marking
71	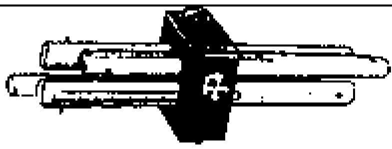	marking gauge	with scribing bar, graduated in mm	for marking carpentry work	
72	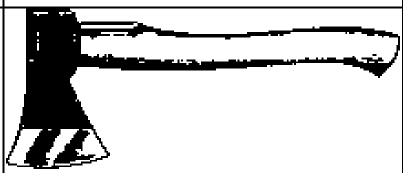	axe	with broad edge and wooden handle	for splitting wood, cutting trees, preparing poles, etc.	keep the axe sharp

D) Special Tools for Metalwork

No.	Drawing	Name(s)	Description	Function	Remarks
73	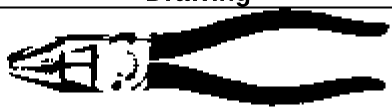	pliers = combination pliers	with single joint, pipe jaws, serrated gripping surfaces and two plastic covered handles	for all kinds of work	
74		pincers	with single joint and two handles	for tying reinforcement with wire, for cutting wire, for extracting nails	for tying reinforcement do not press the pincers too much; for extracting nails use the lever arm (see drawing)

No.	Drawing	Name(s)	Description	Function	Remarks
75		self-grip wrenches = vice-grip pliers	with serrated (= toothed), adjustable jaws with pipe grip; can be locked on the job and stay locked with hands removed; with quick-release lever (spring loaded)	for different kinds of work	adjust by end-adjusting screw until jaws slip over the work, then snap handles shut and jaws will engage with powerful grip; release with release lever
76	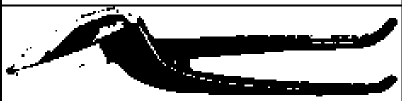	zinc cutter=hand snips=hand shears	with snips and two handles	for cutting zinc or other metal sheets	sharpen the snips from time to time
77		punch	with sharp tip	to mark a point on a piece of metal or make a start for a twist drill (No.17, 6.3/8)	
78		screwdriver	with wooden or plastic handle, sometimes with hexagonal shaft which facilitates the use of spanners for tightening	for screwing screws with slot head	never use a screwdriver as lever arm; take care not to damage the tip
79		cross-screwdriver = Philips screwdriver	with wooden or plastic handle	for screwing screws with Philips head	a cross-screwdriver does not slip away easily
80		open-ended spanner = open-ended wrench	double ended, with jaw angles 15°, in different sizes, often in sets	for locking and tightening bolts and nuts	only use fitting spanners; carefully fit them on the nuts; do not damage the jaws
81	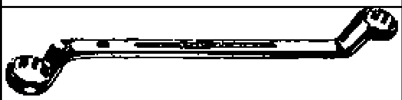	ring spanner = box wrench	double ended with 12-faced rings, in different sizes	for loosing and tightening bolts and nuts; more force can be inserted than with open ended spanners	only use fitting spanners; place the spanner carefully on the nut

No.	Drawing	Name(s)	Description	Function	Remarks
82	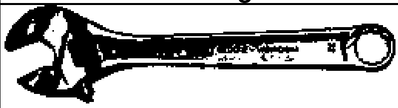	adjustable spanner = adjustable wrench = crescent wrench	with movable jaws, adjusted by a screw	for loosing and tightening bolts and nuts of any size	adjust the jaws so that they grip the nut exactly
83	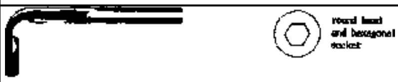	alien keys = alien wrench	hexagonal rod in L-shape; in different sizes; often in sets	for hexagonal socket heads	use the long end as a lever arm
84	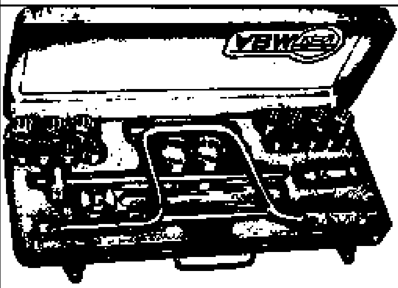	socket sets	with bi-hexagonal sockets in different sizes and ratchet handle	:or loosing and tightening bots and nuts	fit the socket on the nut and tighten with the ratchet handle; quicker work than with ring spanners; more force can be applied
85	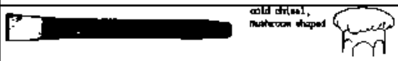	cold chisel	made from specially treated steel	for cutting metal pieces or cutting holes into brickwork and concrete	keep the tip sharp; never allow the other end to become mushroom shaped
86	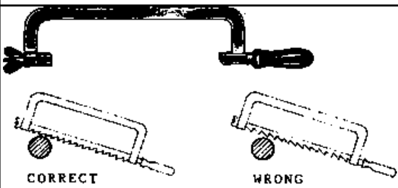	hacksaw frames	steel frame with handle and blade holders	for sawing metal parts	the blade must always be tight; do not apply force when sawing; always mount blade so that teeth will cut on the push stroke, see drawing; see also 8.32/12
87	 Choice of suitable blade for different materials: At least three teeth should be in contact simultaneously. 	hacksaw blades	steel blade with teeth	for sawing metal parts	do not try to saw with worn-out blades, but replace them; never replace a blade in the middle of a cut, because this would spoil the new blade; see also 8.32/12

No.	Drawing	Name(s)	Description	Function	Remarks
88		angle grinding machine = angle grinder	electrical machine for cutting and grinding discs	for cutting and grinding	hold the machine firmly; always use eye-protectors
89	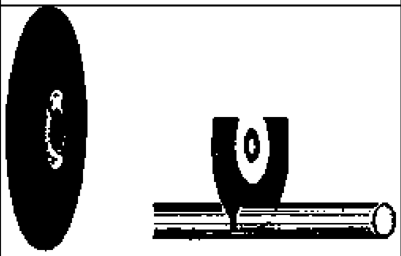	cutting disc = cutting-off wheel	consisting of cutting medium and bonding agent according to the material to be cut	for angle grinder	use only for cutting, never for grinding; tighten the disc safely; never use force; touch the object to be cut vertically and without pressure
90		grinding disc = grinding wheel	consisting of grinding median and bonding agent according to the material to be ground	for angle grinder	use only for grinding never for cutting; tighten the disc safely; grind without pressure
91	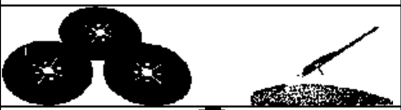	shrubbing disc	from soft material	for angle grinder	use only for smoothing the surface
92		eye protectors = safety goggles	plastic glasses with front and side protection	for protecting the eyes	always use eye protectors when cutting and grinding
93		set of welding equipment	consisting of welder's screen, 2 cables with connections, 1 electrode holder, 1 earth clamp, 1 wire brush, 1 chipping hammer	for welding	the cable area Ø must fit the welding generator's specification

No.	Drawing	Name(s)	Description	Function	Remarks
94	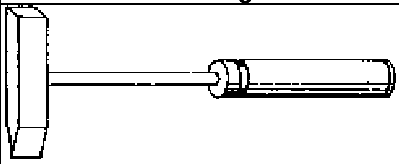	soldering iron	with square copper section and wooden hand grip	for soldering	warm up in open fire and solder
95		anvil	with plane work surface	for blacksmithing	the anvil must be mounted on a wooden block to absorb vibration
96		flat file	of rectangular shape, one edge uncut, with double cut	for sharpening flat metal surfaces and sharp corners and blunts	for all files: keep them dry and clean
97		three-square file = triangular file	double cut sides, uncut top	for finishing inside corners, slots, etc.	
98	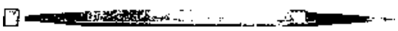	square file	double cut on all four sides	for filing grooves, rectangular holes and inside shoulders	
99		round file	double cut	for round and concave surfaces	
100		half round file	double cut, all around	for finishing concave and plane surfaces and larger holes	
101		file brush = file card	fine and flat wire inrush	for cleaning files	keep the brush dry
	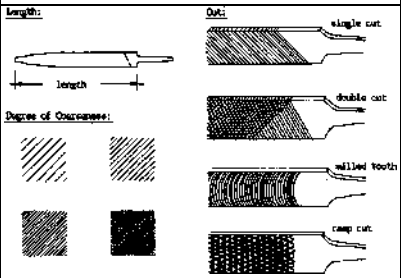	<u>Length:</u> The length of the file does not include the tang (= the projecting part by which the blade is held in the handle). The length of the file should be chosen according to the size of the workpiece: the larger the workpiece, the larger the file. It is better to choose a file that is too long than one that is too short to ensure stability when working.		<u>Cut:</u> Files are divided into four cuts: single, double, milled tooth, and rasp. Single cut files are for filing steel and metals with normal working pressure. Double cut files consist of two diagonal cuts. They are used at higher working pressure than single cut files for iron, steel, but also plastics, wood, etc.	

No.	Drawing	Name(s)	Description	Function	Remarks
		Degree of Coarseness: Files are divided into the following degrees of coarseness: rough, bastard, median-fine, fine. Fine files are used for hard material where a good finish is required, while coarse files are used on soft material where a rough surface can be tolerated.		Milled tooth cut files are used for smoothing the surface in car-body repair work. The teeth form curves over the surface of the file. Rasp cut files have a series of pointed, individual teeth. They are used for coarse work in soft material, e.g., wood, plastic, aluminum, leather, etc.	
102	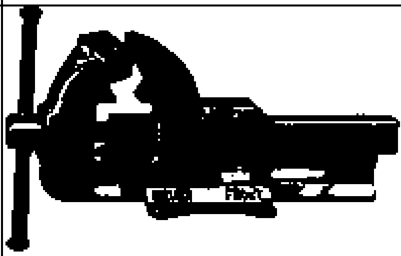	vice	with steel jaws and spindle; sometimes, pipe jaws under the smooth jaws	for holding items firmly	keep the vice well greased; do not use force
103	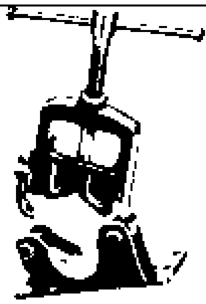	pipe vice	with pipe support and ringed jaws	for holding pipes firmly	keep the vice well greased
104	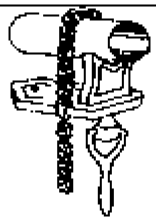	chain pipe vice	the pipe is held all around with a chain	for holding pipes firmly	fix the chain as firmly as possible, then screw the handle
105	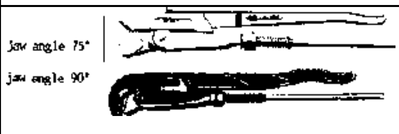	pipe wrench Swedish type	with two serrated jaws, adjusted with a positioning screw; the jaw angle can be 90° or 75°; with two handles; in different sizes	for fixing threaded pipe joints	for handling pipe wrenches see 8.32/14f; optimal grip only in one direction

No.	Drawing	Name(s)	Description	Function	Remarks
106	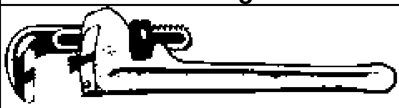	pipe wrench British type	with two serrated jaws, adjusted with a positioning screw; with a spring; only one handle	for fixing threaded pipe joints	grip only in one direction
107	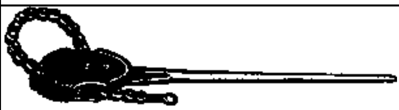	chain wrench	with chain, double toothed, reversible jaws and one handle	for fixing and holding pipes or irregularly shaped objects	fix the chain as firmly as possible, then move the handle; grip in both directions possible
108	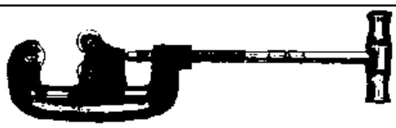	pipe cutter	with cutting wheel, two guiding wheels and adjustable handle	for cutting pipes	never use force; fit the cutter on the pipe, screw the handle until the cutting wheel touches the pipe cut one round, screw the handle, cut one round, etc.; always use cutting oil; see 8.32/12
109		thread tap	with straight flutes to deliver the swarf (= chips) out of the hole; with square shank	for tapping (= cutting) internal threads for bolts and pipes; the tap must fit to the specifications of the thread (for threads, see 8.32)	always use with thread cutting oil; never apply force
110	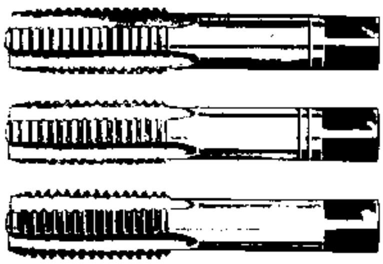	series taps	for pre-cutting, medium cutting and fine cutting	for tapping internal threads with very good finish	the three taps have to be used one after the other
111		tap wrench	adjustable for different taps, with two handles	for holding taps	

No.	Drawing	Name(s)	Description	Function	Remarks
112	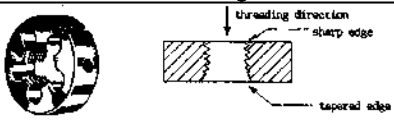	threading dies = threading dice	round dies	for threading external threads of bolts, pump rods, etc.; the dies must fit to the thread specifications (for threads see 8.32]	check for starting point by noting the tapered side (not the sharp side); use the dies always with thread cutting oil; never apply force
113	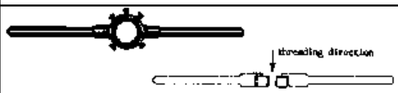	die stock	for different dies with two handles	for holding dies	fix the die in the stock as shown in the drawing
114	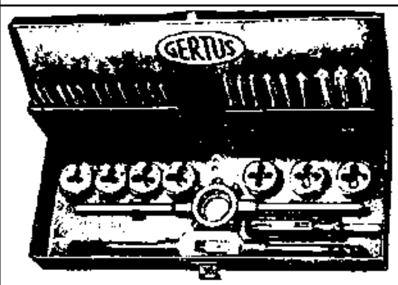	tap and die sets	contain tap and dies of different sizes, complete with tap wrench and die stock in a box	for cutting internal/external threads of bolts; the taps and dies must fit to the thread specifications (for threads see 8.32)	the taps and dies are well protected and complete in a set, however, some diameters wear out quicker than others
115		pipe thread die stock (with chaser dies) = pipe threader = thread cutter for pipes	with ratchet; automatic centering; right and left hand threading possible; chaser dies can be exchanged Ear taper or cylindrical threads; one set of chaser dies suitable for different pipe diameters, because the diameter can be adjusted	for cutting external pipe threads; one die stock can be used for different threads	always insert the chasers in the indicated order; suitable also if the pipe ∅ is different from the specifications; open the chaser dies after threading, screwing back on the thread is necessary; the ratchet allows to turn the handle conveniently back and forth instead of screwing continuously
116		chaser dies	4 chaser dies in one set, suitable for different pipe diameters, because the diameter can be adjusted	for fitting into pipe thread die stock	replace the chaser dies if worn out or chipped (= part broken off)

No.	Drawing	Name(s)	Description	Function	Remarks
117		pipe thread die stock (with separate screw heads)	separate screw heads for each diameter; with right or left hand ratchet	for cutting external pipe threads; the screw heads must fit to the thread specifications (see 8.32)	quick change between various thread sizes; the pipe diameter must fit exactly to the specification
118	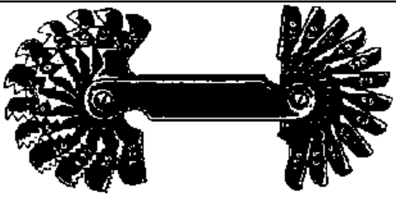	thread gauge = screw pitch gauge	folding blades with gauges for different threads	for measuring internal and external threads	hold the gauge against the thread; if it fits read the specification
119		cutting oil = thread cutting oil	there are two types: 1. on biological base for threading drinking water pipes 2. on mineral base for all other threads	for lubricating and cooling while threading	continuous lubrication is necessary; this will ensure better threads and increased life of the threading tools
120		oil can	with reservoir, spout and pressure pump	for oiling tools, etc.	keep the spout clean
121	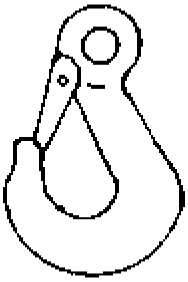	lifting hook = swivel hook	from forged steel with safety catch	for lifting weights	the safety catch must be intact and the load must hang inside the safety catch; see also 8.17/20

No.	Drawing	Name(s)	Description	Function	Remarks
122	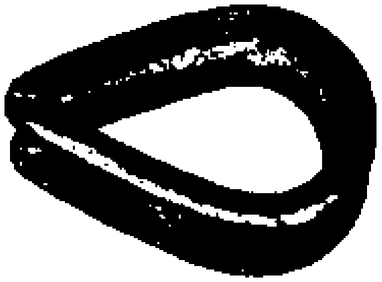	thimble	drop-shaped, from galvanized steel	for permanent eyes of steel cables	tighten the wire rope grip closely to the thimble; see also 8.17/16
123	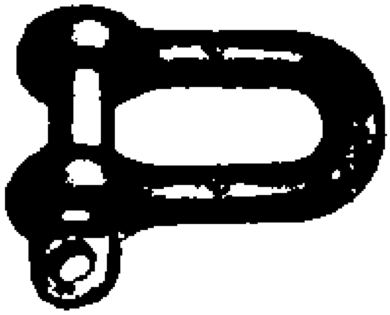	shackles = D-shackle	U-shaped with bolt, different sizes for different weights	for connecting the eye of a steel cable with other elements	see also 8.17/19
124	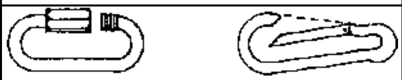	connecting links	eye from steel rod which can be opened; alternatively with screwed connection	for quick connection of steel cables, ropes	see also 8.17/19
125		wire rope grip = wire rope clamp = cable clamp	the cables to be connected are inside a U-bolt and a cross piece is pressed against them by nuts	for fixing two wire ropes (= steel cables) together	for lifting devices use 3 wire rope grips for each connection; see 8.17/16
126	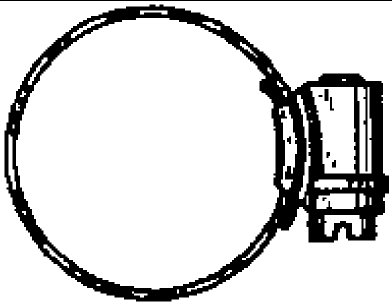	hose clips	from steel band with rolled-up band edges to prevent the band from cracking, tightened with bolt	for tightening hoses on a fitting	use 2 hose clips for each connection

6.4 Using Measuring Tools

Correct measuring is essential for good quality technical work. Many mistakes happen due to incorrect use of measuring tools. The technician needs to learn and practise the correct use of measuring tools.

The most basic measuring tools such as measuring tape, spirit level and plumb bob are explained here.

A) Measuring Tape

The tool for measuring distances is called “measuring tape”, “tape-measure”, or “meter”.

Note:

meter = measuring tool metre = unit of length in metric system

Measuring tapes are supplied in different length: 2m, 5m, 10m, 30m, 50m, etc.

Note that all illustrations in this chapter are not to scale!

1. Reading Measuring Tapes 10m, 30m, 50m (see also 6.3/2f)

Long measuring tapes are normally from flexible material like plastic. The tape is wound up into a round box. Often metric measurements are on one side of the tape, and British measurements are on the back.

The tape is marked with short lines and long lines crossing the whole width of the tape. Only the long lines are marked with numbers. If the number consists only of one figure, the figure stands left from the line. If it consists of two figures (or a figure and a letter), they are left and right from the line:

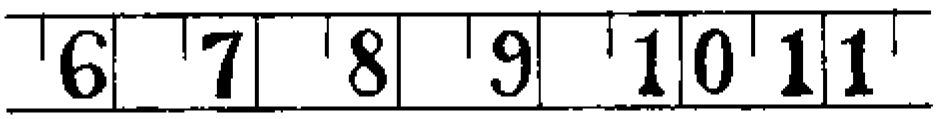

a) Measuring Tape in Metric System

The tape in the metric system measures m, dm, cm.

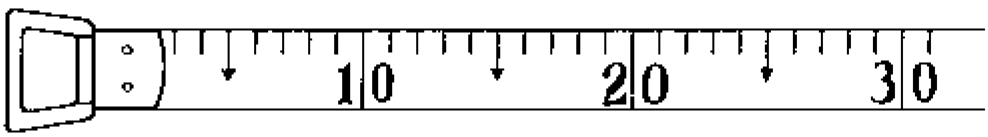

The short lines indicate cm. Every fifth cm is indicated with a longer line with arrow for better orientation. No numbers are given for cm. You have to count them yourself. Every tenth line is a long line and is indicated with the appropriate length.

For example:

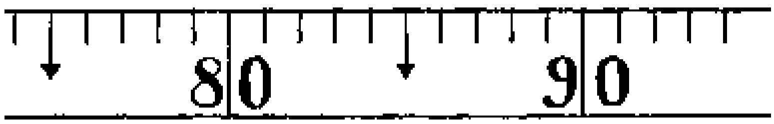

These numbers in black (the two figures left and right of the long line) indicate cm.

For measuring a length between two numbers:

- Read the previous cm indication.
- Count the cm.
- Add the two.

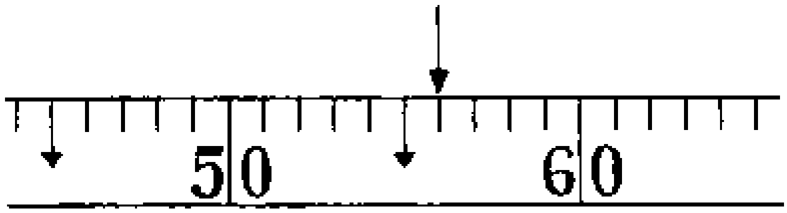

Previous cm indication:	50 cm
cm counted:	6 cm
length measured:	56 cm

Full metres are indicated as 1 M; 2 M; ... 9 M; 10,11,..., and are printed in red for differentiation. Any black number for cm beyond 1 m is marked with a small red number indicating the metres.

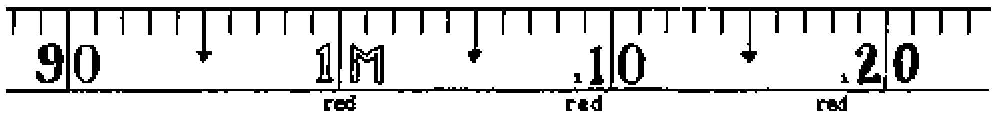

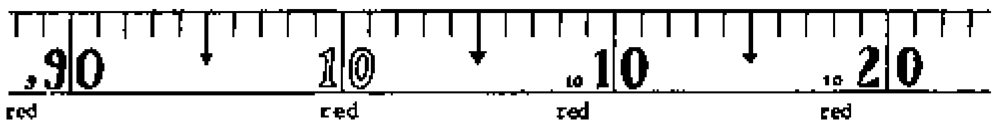

Read measurements bigger than 1 m as follows:

- Read the previous small read number as m.
- Read the previous number in black.
- Count the cm.
- Change all into one unit (e.g. m). For transformation see 5.3/1.
- Add the three.

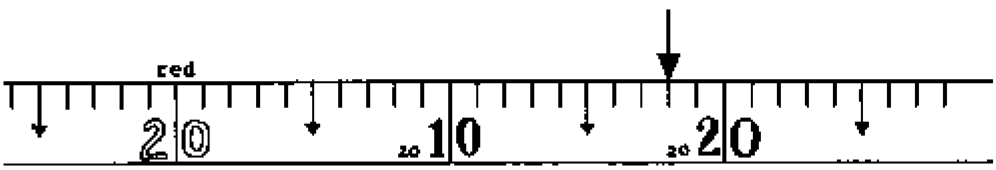

Previous m indication:	20 m =	20.00 m
previous cm indication:	10 cm =	0.10 m
cm counted:	8 cm =	0.08 m
length measured:		20.18 m

Take special care immediately after a m indication:

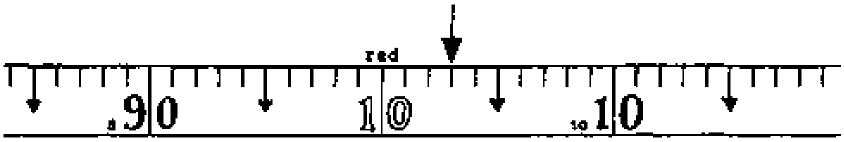

previous m indication:	10 m =	10.00 m
previous cm indication:	- -	
cm counted:	3 cm =	0.03 m
length measured:		<u>10.03 m</u> **!!**

For comparison:

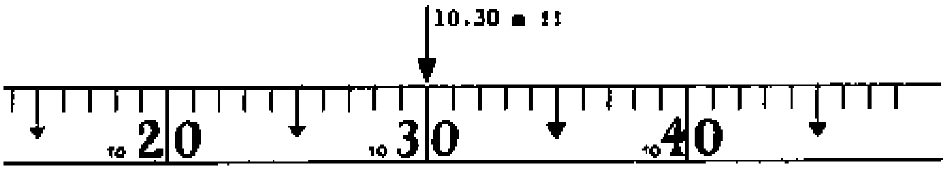

b) <u>Measuring Tape in British System</u>

The tape in British system can measure inch (= ") and feet (= '). The short lines indicate half inches. The long lines indicate inches; the numbers are given in black. If the number consists of two figures, one is left, the other right of the relevant line. Inches are numbered from 1 to 11. The twelfth inch completes a foot which is indicated in red as 1 F, 2 F,... 9 F, 10,11, etc.

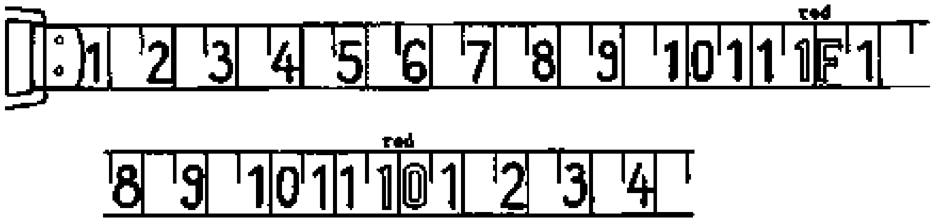

Read measurements as follows:

- Read the previous red figure as foot.
- Read the previous black figure as inch.
- Read $\frac{1}{2}$-inch.
- Add up the three.

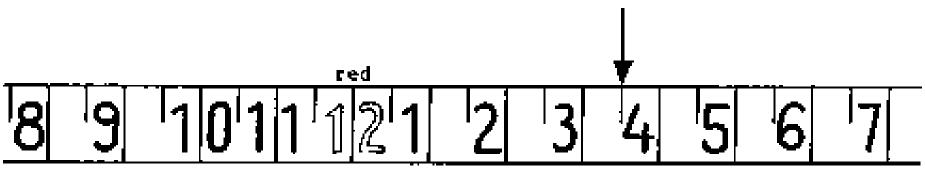

previous foot indication:	12'
previous inch indication:	3"
half inch:	$\frac{1}{2}$"
length measured:	$12'3\frac{1}{2}$"

2. Reading Measuring Tapes 2m, 5m (see also 6.3/2f)

Short measuring tapes are usually made from a stiff metal strip, wound up by a spring into a small, handy round or square box. Often the tape shows British measurements on the top half and metric measurements in the bottom:

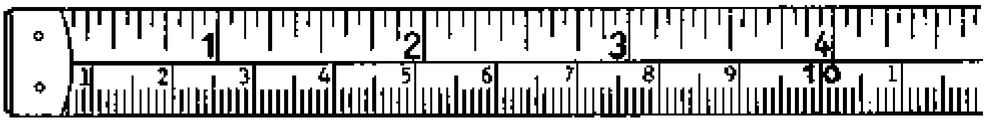

Read either of them, but keep them strictly apart, especially the numbers, and be careful not to get mixed up.

a) Metric Side

On the metric side you can measure cm and mm. The short lines indicate mm without numbers. You have to count them yourself. Every fifth mm (= $\frac{1}{2}$ cm) is indicated with a middle size line for easier counting. Every tenth line is a long line marked with a number which indicates cm from 1 cm to 9 cm. Every tenth cm is indicated with a **fat number: 10, 20,...90.** After each of these, the cm are marked again from 1 to 9. 1 m is indicated as **100** cm.

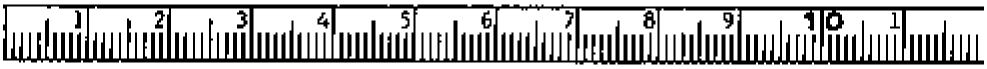

Read the measuring tape as follows:

- Read the previous **fat** number (with 2 or more places) as cm.
- Read the previous single number as cm.
- Count the mm.
- Change the mm into cm. For transformation see 5.3/1.
- Add all three.
- Change to m, if necessary.

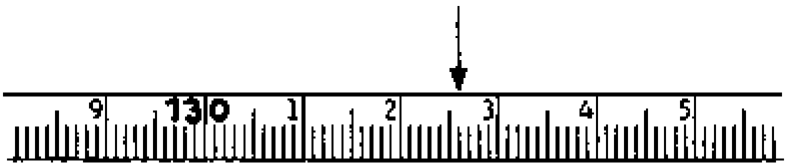

previous **fat** number:	130 cm =	130.0 cm
previous single number:	2 cm =	2.0 cm
mm counted:	6 mm =	0.6 cm
length measured:		132.6 cm = 1.326 m

Take special care immediately after a m indication:

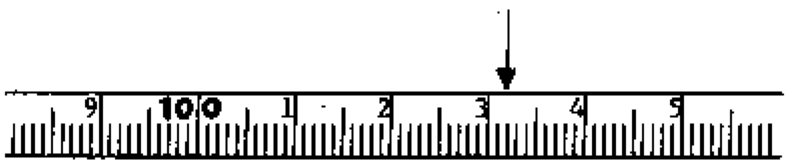

previous **fat** number	100 cm =	100.0 cm
previous single number:	3 cm =	3.0 cm
mm counted:	2 mm =	0.2 cm
length measured:		<u>103.2 cm = 1.032 m</u>

For comparison:

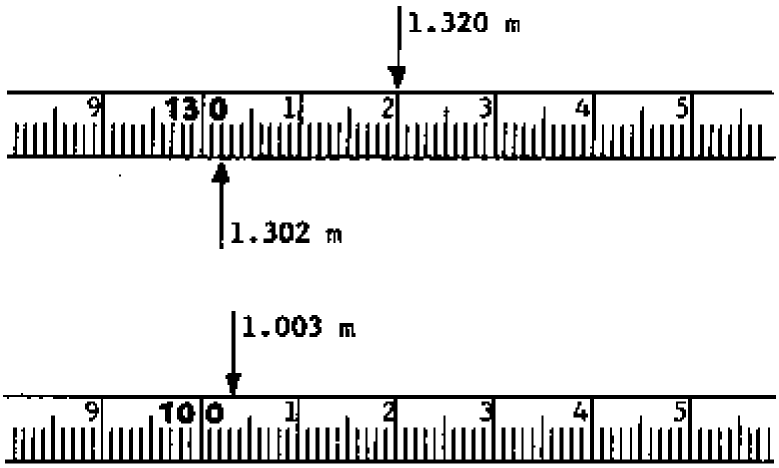

b) <u>British Side</u>

On the British side you can measure inches, $\frac{1}{2}$ “, $\frac{1}{4}$ “, $\frac{1}{8}$ “, $\frac{1}{16}$ “. The short lines indicate $\frac{1}{16}$ “; every second short line is a bit longer and indicates $\frac{1}{8}$ “; every fourth line is middle size and indicates either $\frac{1}{4}$ “ or $\frac{1}{2}$ “, all of them without numbers. Every long line indicates an inch with its number.

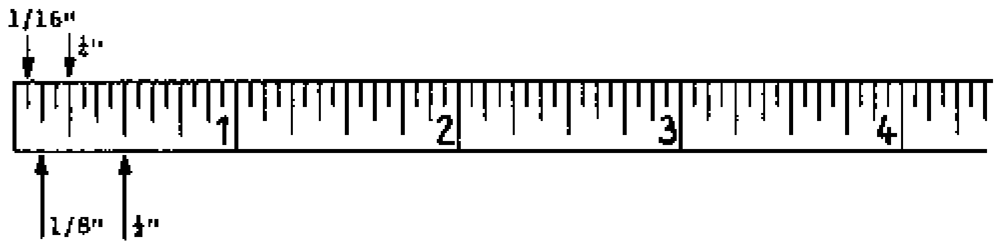

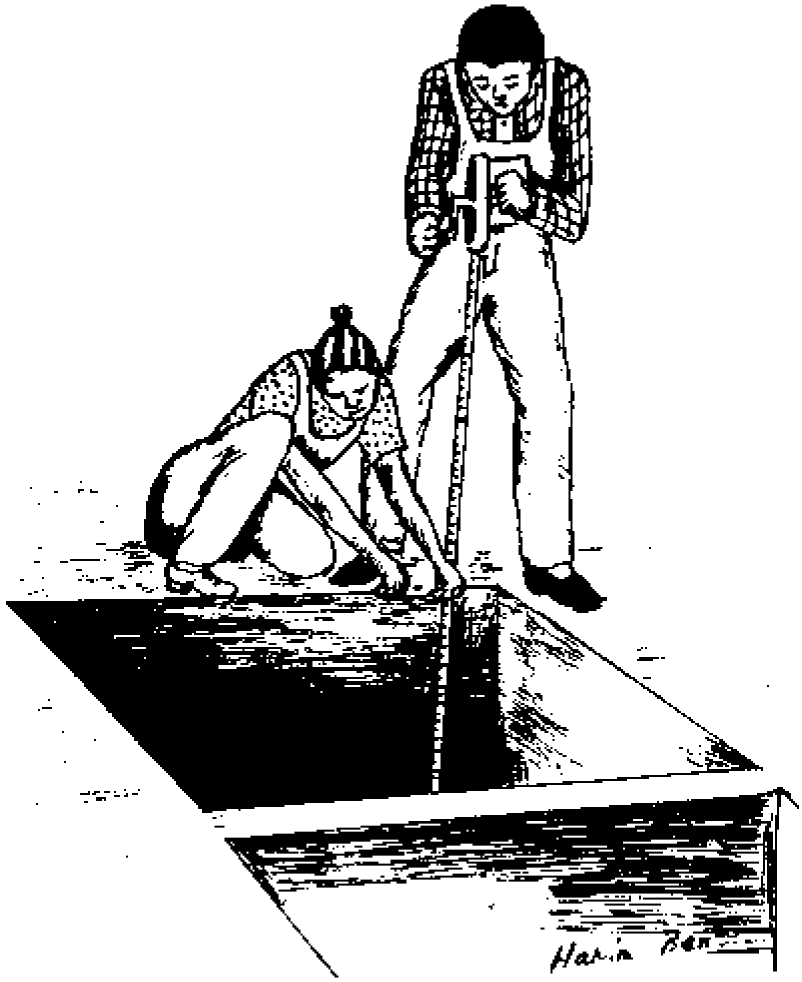

B) Spirit Level (see also 6.3/4f)

A spirit level (= plumb level) can measure whether a floor is level (= horizontal) or a wall is plumb (= vertical).

For levelling, use it like this:

- Lay the spirit level on the object to be levelled.
- Wait until the bubble has settled in the tube.
- The object is level if the bubble is in the middle between the 2 marks on the tube:

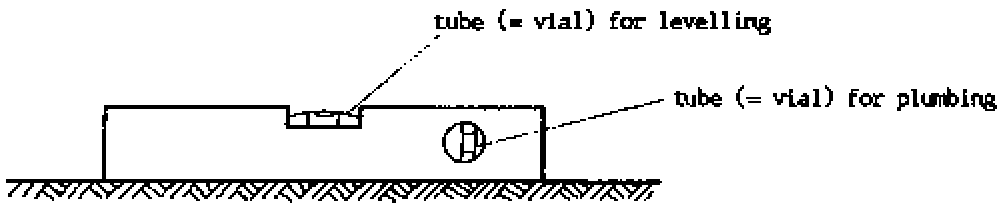

- Turn the spirit level like this:

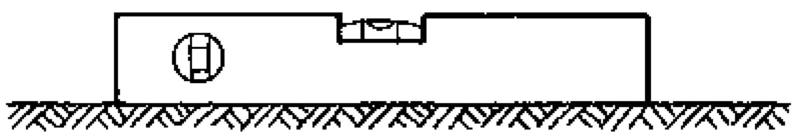

If the indication is the same, the spirit level is functioning well.

For plumbing use it like this:

- Press the spirit level flat against the wall. There must be no gap between the spirit level and the wall.

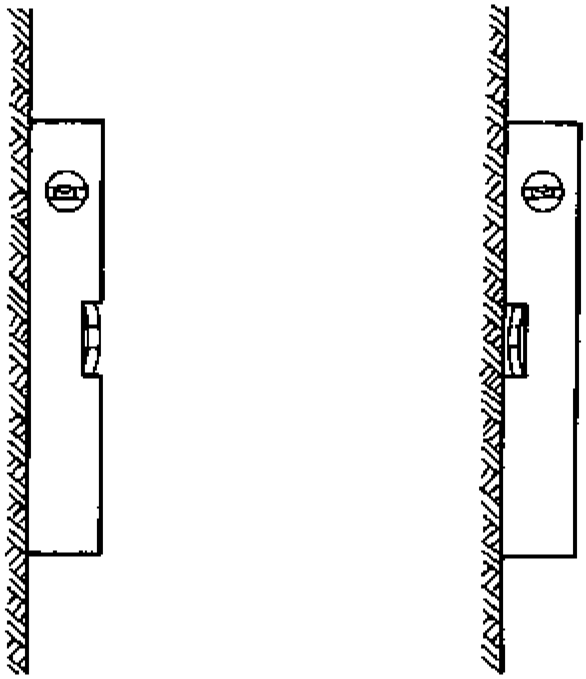

- Wait until the bubble has settled in the tube.

- The wall is plumb if the bubble is in the middle between the two marks on the tube.

- Turn the spirit level with its other edge against the wall. If the indication is the same, the spirit level is functioning well. (see drawing above).

C) Plumb Bob (see also 6.3/4f)

A plumb bob (= engineering bob) measures whether a wall, a well, etc., is plumb (= vertical) or not. For a deep well a plumb bob is more practical than a spirit level.

Use it as follows:

- Hold the wooden peg of the plumb bob against the wall.

- Slowly allow the plumb to move downwards by releasing the line. Avoid swinging movement.

- If there is a gap between plumb and wall, the wall is not plumb.

- If the plumb is resting against the wall, the wall is not plumb.

- If the plumb freely hanging just touches the wall, the wall is plumb.

- If the line is torn, replace it with a new line - never knot it.

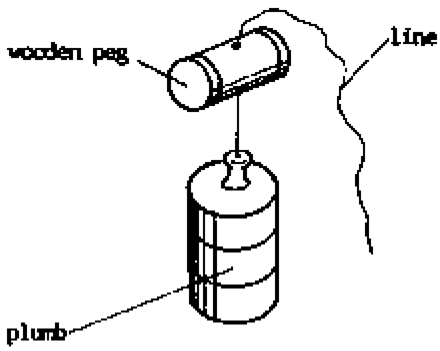

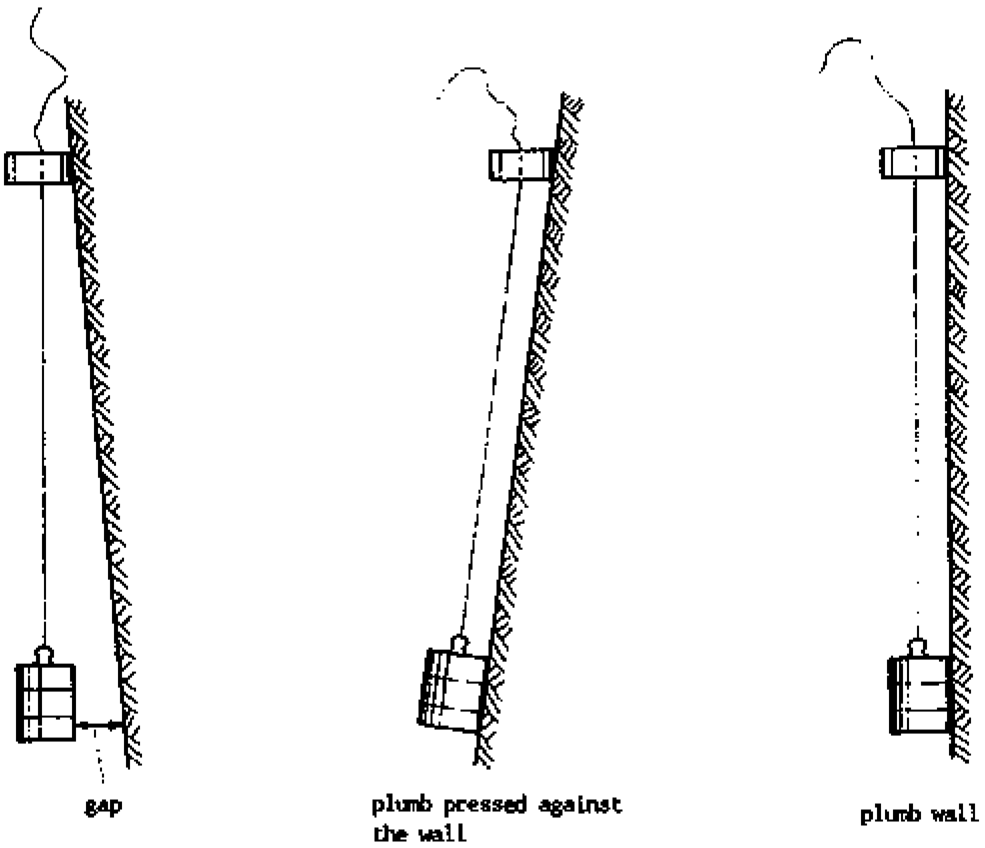

6.5 Building and Other Materials

Mt 7,24-27

The main features and properties of building and other materials are listed below in brief form.

A) Materials for Walls, etc.

1. Concrete

see chapter 6.6

2. Brick

- made from fired clay,
- lots of firewood needed and, therefore, deforestation encouraged,
- good strength,

- good resistance against weathering,
- fire resistant,
- good heat insulation,
- good sound insulation,
- allows moisture movement in the wall,
- recycling possible.

3. Mudblocks (see also 6.8)

- produced as sun-dried clay brick

- better quality if about 30% sand and 5 to 30% clay/silt,

- durable if wall protected from rain, ants and soil movement (by foundation and ant course),

- recycling possible.

4. Stabilized Mudblocks (= Mud Bricks)

- produced in block-making machine (Cinva Ram, Bre-Pack) and then air-dried,
- consisting of clay with 7 to 10% cement or lime added,
- partial hydration takes place,
- curing necessary,
- high durability,
- good resistance against rain,
- recycling possible.

B) Mortars and Plasters

1. Cement

see chapter 6.6

2. Lime

- 2 types of lime:

    * hydraulic = capable of setting under water,
    * non-hydraulic = not capable of setting under water,

- produced from heated (to 1,000°C) and ground limestone,
- water to be added before use (= "slaking"),
- slow hydration (over decades),
- durable,
- used for brick and stone walls,
- also used as whitewash for painting,
- expensive in Sudan,
- recycling possible.

3. Mud Mortar

- used for fired bricks and mudblocks,
- durable if protected against rain,
- inexpensive,
- recycling possible.

C) Locally Available Materials

1. Sand

- fine sand suitable for water filters and plastering,
- coarse sand suitable for concrete,
- sand without silt and impurities needed for concrete.

2. Gravel

- gravel without silt and impurities needed for concrete,
- broken rock with rough surface stronger than smooth pebbles.

D) Timber

1. General Properties

- strong; has compressive and tensile strength,
- light,
- durable if protected from moisture and ants,
- weak when wet, and strong when dry,
- strength 30 to 40 times greater along the grain than across it,
- great loss in strength at knots,
- recycling possible.

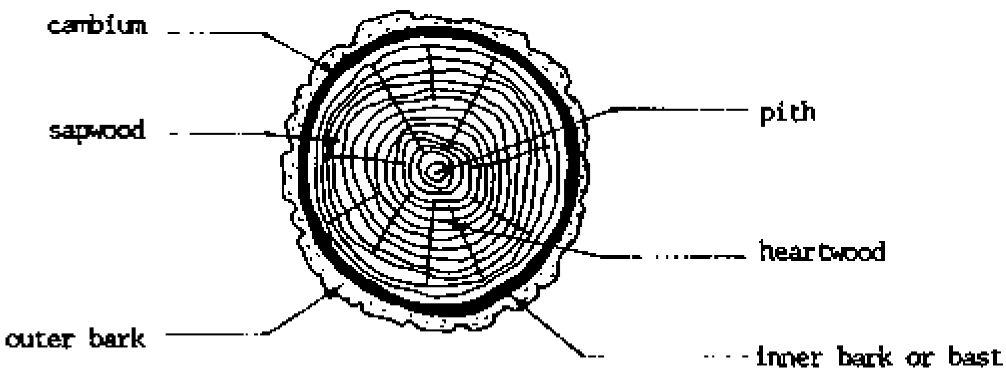

2. Production

- planting trees,
- cutting logs in dry season,
- drying logs (= seasoning),
- cutting logs into sawn timber,
- drying timber (correct way of storage see 7.10/3),
- ready for use, replanting trees.

3. Decay

- by weathering (sun, rain),
- by fungus attack (in wet and warm atmosphere),
- by insect attack, especially termites.

4. Protection

- by using well seasoned timber,

- by building in such a way that timber parts can dry easily and are not continuously wet,

- by ensuring ventilation,

- by ant courses,

- by painting,

- by avoiding painting before woodwork is dry,

- by painting with chemicals,

- by painting with old engine oil,

- by soaking in tar.

5. Softwood

- very soft,
- easily workable,
- grows quickly,
- no resistance against termites.

6. Hardwood

- the slower the growth, the harder the wood,
- difficult to work,
- very durable,
- termite resistant.

E) Roofing Materials

1. Zinc

- galvanized iron (= iron coated with zinc),
- very much energy needed for production,
- rust prone,
- fireproof,
- light, 
- durable,
- easy to install,
- very hot, no insulation,
- expensive,
- not locally produced,
- no recycling possible,
- rainwater catchment possible.

2. Tiles

- produced from fired clay,
- lots of firewood needed for production, therefore, deforestation encouraged,
- heavy,
- fireproof,
- no corrosion,
- can break,
- durable,
- cool,
- locally manufactured,
- relatively expensive,
- good appearance,
- recycling possible,
- rainwater catchment possible.

3. Grass (see also 6.8)

- produced by nature,

- light,

- not fireproof,

- durable only if thatched in a special way and with sufficient grass,

- prevention from ants by ant course or by separation of wall and roof structure necessary,

- locally available,

- cool,

- skilled thatchers locally available,

- reasonable costs,

- recycling possible,

- not optimal for rainwater catchment.

4. Asbestos Cement Sheets

- made of cement mortar and asbestos fibres in the shape of zinc sheets,

- mining of asbestos and production causes sickness and death of many workers,

- not corrosive,

- light,

- fireproof,

- relatively durable, however, rain washes asbestos fibres into the groundwater (can cause cancer),

- hot,

- easy to install,

- expensive,

- not locally produced,

- no recycling possible,

- no rainwater catchment possible because of asbestos fibres.

5. Fibre Reinforced Cement Sheets (see also 6.6/3 and 6.6/13)

- made of cement mortar and fibres (like sugar cane, coconut, or sisal fibres) in the shape of zinc sheets,

- no danger to humans,

- not corrosive,

- light,

- fireproof,

- relatively durable,

- hot,

- easy to install,

- expensive,

- eventually locally produced,

- no recycling possible,

- rainwater catchment possible.

6. Aluminium Sheets

- aluminum sheet with sharp edged profile: 
- very much energy needed for production,
- corrosion prone,
- light,
- not fireproof,
- moderately hot (because of high reflection of sun rays),
- not durable,
- easy to install,
- very expensive,
- not locally produced,
- recycling eventually possible,
- rainwater catchment possible.

F) Ferrous Metals

1. General Properties

- all made from the raw material iron ore,

- density (= weight per unit volume in kg/dm^3, see 5.7/1): all ferrous metals have a high density, i.e., they are heavy,

- elasticity (= the capability of metal to recover its size and shape after deformation by forces),

- plasticity (= the lack of capability of a metal to recover its size and shape after deformation by forces; the capacity for being molded or altered; the ability to retain a shape attained by pressure deformation),

- ductility (= the capability of metal of being drawn into fine wire),

- malleability (= the capability of metal of being shaped by hammering or rolled into sheets without fractures),

- hardness (= the ability of metal to withstand scratching and wearing),

- corrosion resistance (= the ability of metal to resist corrosion from water, air or acid),

- electric conductivity (= the ability to transmit electricity),

- thermal conductivity (= the ability to transmit heat or cold).

2. Wrought Iron

- less than 0.1% carbon,
- wrought (= formed by application of mechanical force) in either hot or cold state,
- almost pure iron,
- easily formed by blacksmithing,
- used for chains, crane hooks, doors, gates.

3. Steel

- 0.1 to 1.5% carbon,

- made from iron by melting,

- easily formed by blacksmithing,

- weldable,

- cannot be hardened,

- high elasticity,

- limited durability (corrosive),

- used for reinforcement, steel bars like equal angle steel, etc., drums for fuel, parts of cars, pipes.

4. Stainless Steel

- high durability (not corrosive),
- weldable,
- very expensive,
- used for pots, knives, watches, measuring instruments, special machinery parts.

5. Cast Iron

- 2 to 4.5% carbon,
- cast (= pouring the molten metal into a mould),
- blacksmithing not possible,
- not weldable,
- can be hardened,
- brittle (= can crack and break),
- sparking red when ground,
- deep sound,
- used for cast parts like motor block, main part of diaphragm pump, etc.

G) Other Metals

1. Aluminium

- bluish silver-white metal,
- high strength compared to weight (low density),
- low hardness: soft on the surface,
- easy to work,
- no blacksmithing possible,
- welding only with inert gas welding,
- corrosion prone,
- surface gets grey through oxidation which protects against corrosion,
- easily attacked by salty water,

- high reflectivity,
- high ductility and malleability,
- used for tins, aluminium foil, airplanes, etc.
- cast aluminium used for base plate of pipe moulds.

2. Copper

- reddish colour,
- low hardness: soft,
- high durability: no corrosion,
- high ductility and malleability,
- easily workable; also cold workable without cracking,
- can be soldered,
- green surface through oxidation,
- high conductivity for heat and electricity,
- used for electric cables, cooking pots, etc.

3. Brass

- yellow copper and zinc alloy (= molten mixture),
- workable in cold state,
- soldering possible,
- used for coating metal sheets, bearing surface, jewelry and decorations, etc.

H) Paints

1. General Properties

- preserve (= keep from decay),
- protect surfaces,
- decorate surfaces,
- enable the surface to be cleaned easily.

2. Components

- pigment (= base), a powdered substance, gives colour and provides opacity (= the quality of being impervious to the rays of light),

- liquid (= vehicle), carries the pigment and consists of binder, thinner and drier,

- binder, fixes the pigment to the surface to be painted,

- thinner (= solvent), reduces the viscosity of the paint and helps the paint to penetrate into the surface,

- drier, increases the speed of drying.

3. Oil Paints

- paint with oil as vehicle,
- for priming coats,
- for under-coats,
- for finishing coats,
- dries by evaporation of the solvent and oxidation.

4. Synthetic Paints

- paint produced by chemical synthesis,

- has a better flow than oil paint, therefore, easy to apply,

- sets quicker than oil paint, dries by evaporation of the solvent, oxidation and chemical change.

5. Metal Paints

   - paint with powdered metal as pigment,
   - used for primer coats to prevent corrosion.

6. Whitewash

   - paint from lime and water,
   - not water proof,
   - used mainly for whitewashing inside walls.

7. Water Paints

   - paint using water as vehicle with chemical additions,

   - cement paint with white or coloured portland cement as pigment, watertight, for outside paints.

8. Varnishes

   - liquid preparation forming a transparent coating when dry,
   - oil varnishes,
   - spirit varnishes.

6.6 Cement and Concrete

Cement and concrete are very important materials in construction, especially in water supply and sanitation. Only the most basic knowledge, important for the day-to-day work, is compiled here.

A) Cement

Cement is an adhesive substance in powdered form with the ability to bond aggregates together to form concrete.

1. Manufacture of Cement

Cement is manufactured according to the procedure shown on the next page.

The main constituents of cement are:

1. Calcium Oxide (CaO) in the limestone
2. Silicon Oxide (SiO_2) in the clay

During manufacturing and heating, carbon dioxide is removed. The final product, cement, consists of 3 $CaOSiO_2$. The substance produced has completely different properties from the parent substances.

If salty water is used for making concrete, the salt reacts with the cement and, therefore, less cement is left for hydration. Salt can also appear on the surface. Salt will also enhance corrosion of the reinforcement.

Therefore:

Avoid using salty water for concrete, if possible. Otherwise, add more cement.

Procedure for Manufacturing Cement:

1	winning the raw-material	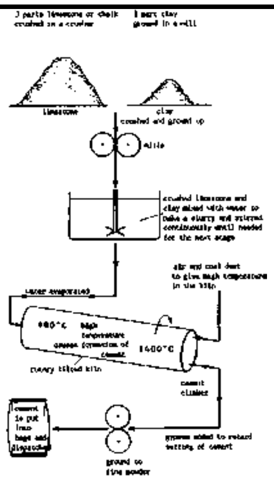
2	mixing	
3	firing	
4	grinding and treatment	

2. Hydration of Cement

The setting of cement is a chemical process called “HYDRATION”. It is a chemical reaction, not just a drying process. Complete hydration takes about one year. Heat is released in the beginning of the process.

$$\text{cement + water + aggregates} \xrightarrow{\text{setting}} \text{concrete + heat}$$

The hydration of concrete is an irreversible process. Comparison between mud and fresh concrete shows that no hydration takes place in mud mortar; the process is reversible.

$$\text{clay + water} \underset{\text{destroyed by crushing or rain}}{\overset{\text{drying}}{\rightleftarrows}} \text{mud brick}$$

If cement once touches water, hydration starts to take place.

Therefore:

Take care that the cement never gets wet before use! Crushing hardened cement into powder never produces cement again.

B) Different Types of Concrete and Mortar

Concrete is an artificial stone made by mixing aggregates, water, and cement as adhesive substance. These components form a new body.

Mortar is a pasty substance made by mixing fine aggregates (like sand) with an adhesive substance (cement or lime or silt).

We differentiate the following types:

Type	adhesive substance	aggregates	water	reinforcement
(plain) concrete	= cement +	sand + gravel +	water	
reinforced concrete	= cement +	sand + gravel +	water +	steel
mudblocks	= silt +	sand + clay +	water	
stabilized mudblocks	= cement +	sand + clay +	water	
cement mortar	= cement +	sand +	water	
mud mortar	= silt +	sand + clay +	water	
ferrocement	= cement +	sand +	water +	chicken wire + welded mesh
fibre reinforced concrete	= cement +	sand +	water +	fibres

The different mixtures look like this:

1. Concrete (cement, sand, gravel), for example 1:3:4

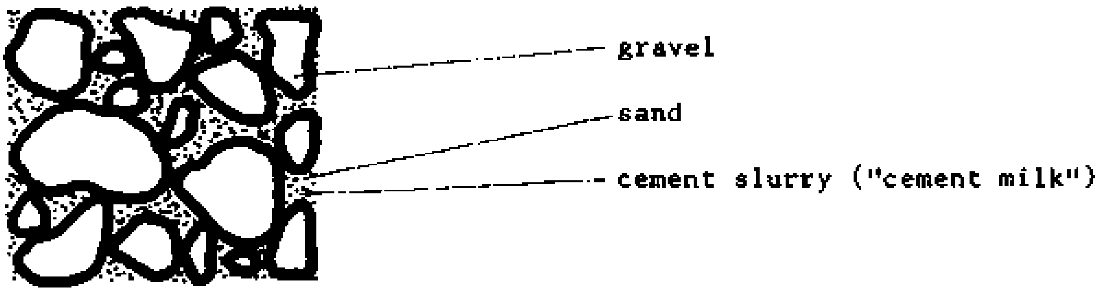

The stones have great strength themselves and contribute to the final strength of the concrete. The voids between the big stones are filled by smaller ones. All the stones are connected with each other ("glued together") with mortar (cement + sand + water) and, thus, form the final concrete.

2. Concrete with only Big Gravel

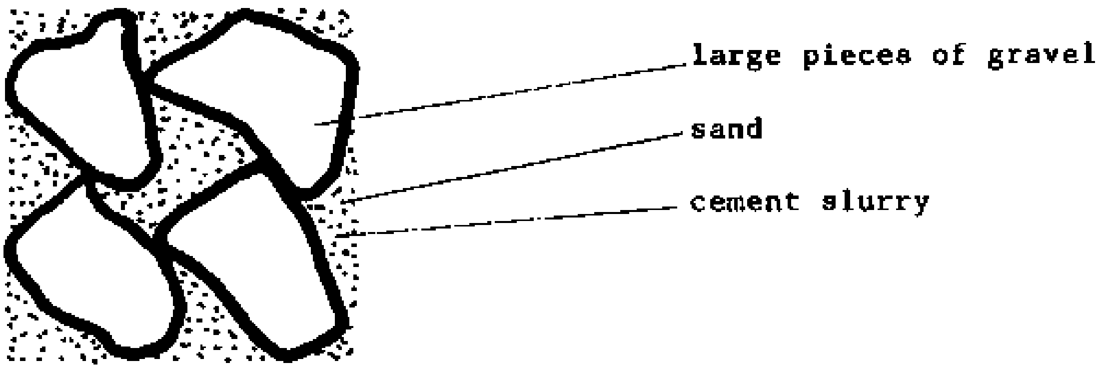

There is no middle-sized gravel to fill the voids. Such concrete is weaker. Therefore, all sizes of aggregate are needed for good concrete, such as big stones, small stones and sand. They are all embedded in "cement milk". The hardening cement milk connects all the aggregates.

Therefore:

The correct proportion of the aggregates is very important.

3. Concrete with too Much Water

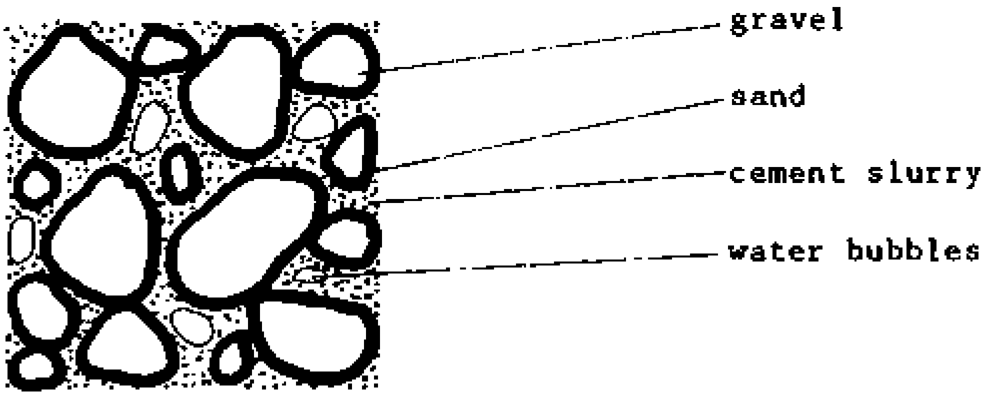

Only a certain amount of water is needed for the hydration process. The rest forms bubbles. Gradually the water in the bubbles evaporates and leaves air bubbles behind which weaken the concrete.

Concrete which is not well compacted also has air bubbles which weaken the concrete.

Therefore:

Too much water and air in the concrete reduce the strength. Mix with just the necessary amount of water and compact properly.

4. Porous Concrete, for example 1:0:4

Porous concrete is concrete without sand for filter rings, permeable for water.

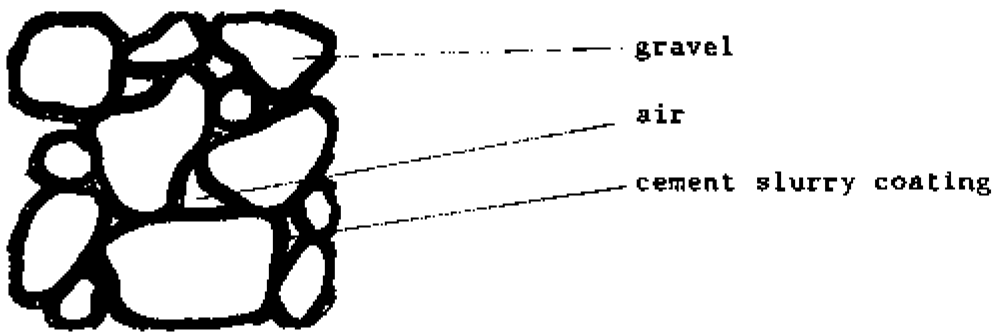

The gravel is surrounded by a thin layer of cement slurry which also connects the different stones. The voids remain empty and, later, allow the water to pass through the concrete. Obviously, porous concrete has less strength than ordinary concrete.

5. Mortar, for example 1:8

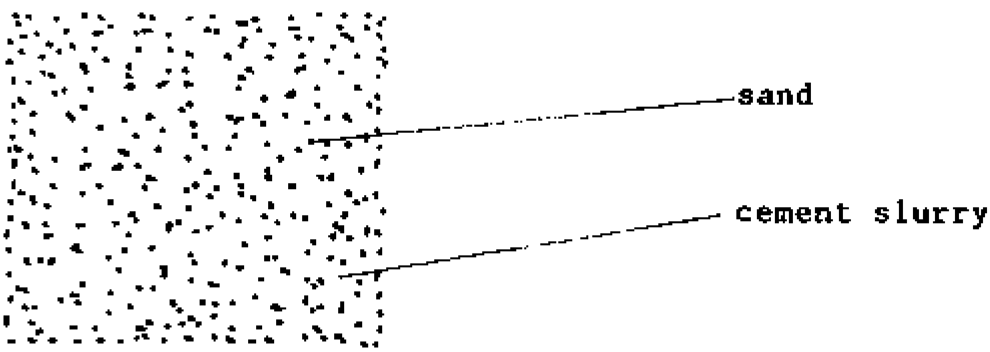

The aggregate which in the case of mortar is only sand is connected by the cement slurry.

C) Strength of Concrete

The strength of concrete grows gradually, as shown in this graph:

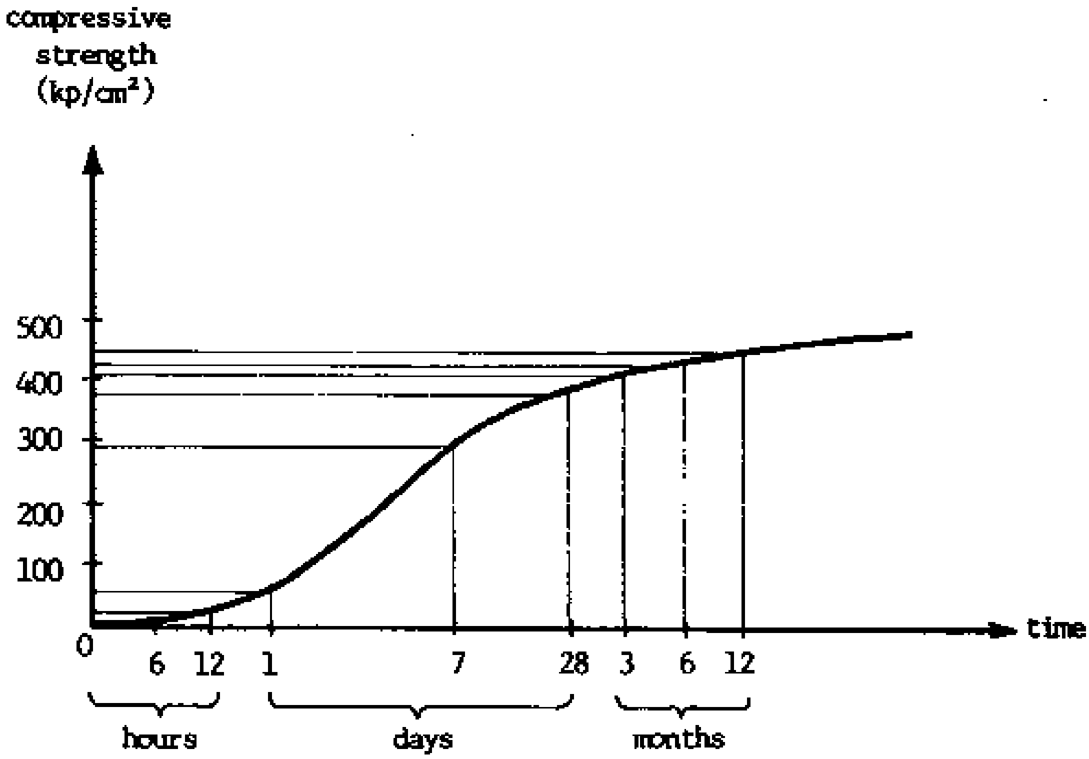

After one day, concrete is still very weak and can be easily broken. After seven days, it already has about half of its final strength, but not enough, for example, for a beam or slab to be loaded or for a hand pump platform to be used. After 28 days the concrete has almost all its final strength, and there is no need to wait for a further increase in strength. The concrete can be fully used.

Too early loading of concrete may cause inward cracks which are not visible outside but which greatly reduce the strength of the concrete and invite further destruction.

The concrete has no strength in the first days. If it is allowed to dry too quickly or is even exposed to sun, it will shrink and develop cracks. These cracks will never close again. If the concrete is kept wet, cracking is avoided until the strength has developed. Afterwards the concrete will develop no cracks (or fewer cracks). Cracks lead to further destruction: Water will enter and cause corrosion of the reinforcement, and the concrete will start to break and crumble further with time.

Therefore:

- Do not step on fresh concrete on the first day.
- Shutters can be removed after 6 to 12 hours from the side.
- Slabs or beams need to be supported from underneath for 3 weeks!
- Turn over concrete rings after 48 hours, at the earliest.
- Do not lift slabs before 7 days.
- Do not load slabs or beams before 3 weeks.
- Do not lower a concrete ring before 3 weeks.
- Do not pump on a handpump platform before 3 weeks.
- Keep the fresh concrete wet for 3 to 7 days.

D) Making Good Concrete

Two different pieces of concrete work might look the same immediately after completion, but the difference shows later. Making good concrete requires a lot of effort and hard work. The result will be a very durable concrete. Concrete can also be made carelessly. This concrete will later crack and spoil. Although the workers have seemingly saved work and time in the beginning, eventually it will turn out that both work and material were wasted.

For making good concrete, keep the following rules:

1. Use clean, sieved sand (silt content less than 0.5%).

2. Use clean, washed gravel.

3. Remove all organic material like grass, leaves, and mud. Organic material disturbs the chemical process of hydration.

4. Use the materials in the correct proportion (= mixture).

5. Use enough water for good workability, and no more. Too much water reduces the strength.

6. Use clean water and, if possible, not salty water.

7. Mix the concrete very well to ensure that every grain of the aggregate is coated with the binding material so that maximum strength is assured. First, mix sand and cement while still dry. Turn the heap over at least three times until it has an even, grey colour. Add water. Do not pour the water from high, but slowly and gently. Turn over again three times. Add gravel. Turn over again.

8. Pour the concrete gently, not from high, and compact it well. All air bubbles, which weaken the concrete, must be removed.

9. Keep the concrete wet for three to seven days depending on the climate. This is called “curing”. Cover the concrete with wet sand about three hours after pouring and with nylon sheets, or with wet sacks. Pour water over it daily.

E) Properties of Concrete

Good concrete has the following properties:

- It is easy to cast into any form.

- It is very strong.

    It has a high compressive strength (= strength to resist compression or being pressed together).

    It has a very low tensile strength (= strength to resist tension or being pulled or stretched).

- It is very durable.

- It is a bad insulator, because it has no air bubbles. Concrete houses are very hot.

- Concrete walls do not “breathe”, that is they do not allow any exchange of air and, therefore, concrete creates an uncomfortable atmosphere for human beings.

- It has bad sound insulation.

- It is very difficult to break down concrete and discard it when it is no longer needed. It cannot be recycled.

- It needs little maintenance.

- Concrete is <u>not</u> fireproof. Concrete cracks in fire and reinforcement melts.

These properties qualify concrete as the optimal building material for some purposes (e.g. well rings, latrine slabs, etc.) and not the optimal material for others (e.g. walls for accomodation, etc.).

F) <u>Reinforced Concrete</u>

1. <u>Concrete Reinforced with Steel</u>

Non-reinforced concrete is used where only compressive strength is required; that is, in all parts which are continuously supported, like foundations, floors, etc., where the concrete is only pressed.

Reinforced concrete is used where both compressive and tensile strength are required, because the parts are not continuously supported, i.e., in beams, slabs, ventpipes.

The “tasks” are distributed as follows:

- Concrete, cheap and light, takes the pressure.
- Reinforcement, heavy and expensive, takes the tension.

The concrete protects the reinforcement from corrosion, because it prevents air and water from reaching the reinforcement. This protection can only work if the rods are well embedded in the concrete and if there are no (or few) cracks.

Therefore:

Reinforcement must never be seen on the outside surface of the concrete. There must always be 1-2 cm concrete between the surface and the reinforcement.

2. <u>Position of Reinforcement</u>

Correct positioning of the reinforcement is essential. If the reinforcement is put into the wrong position then the beam, slab, etc., will have no strength to carry their load. The correct position of the reinforcement is determined by the planning engineers.

Therefore:

Place the reinforcement <u>exactly</u> into the location where indicated on the plan.

The position of the main reinforcement of some parts is explained here for better understanding.

First, imagine how the part would bend under load and where it would start to crack. The reinforcement is placed on the side where the part would be stretched. The reinforcement shall prevent the cracks by holding the part together.

Example 1: <u>Supported Beam (or Slab)</u>

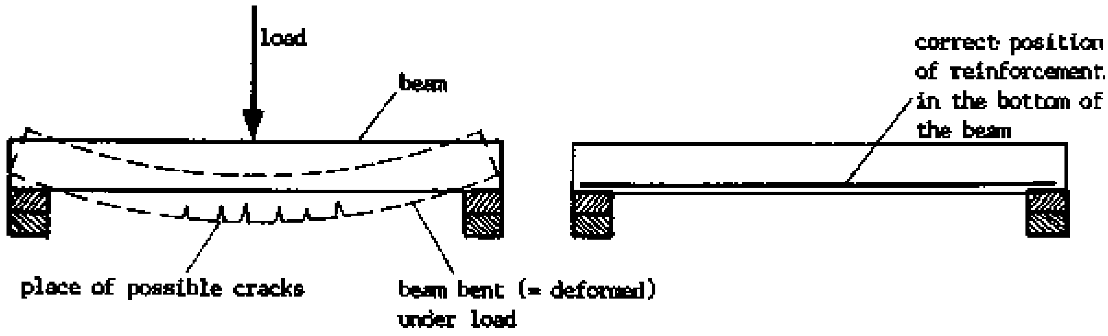

Note: The deformation (= bending) of the part is exaggerated in this and all following drawings!

Example 2: Cantilever

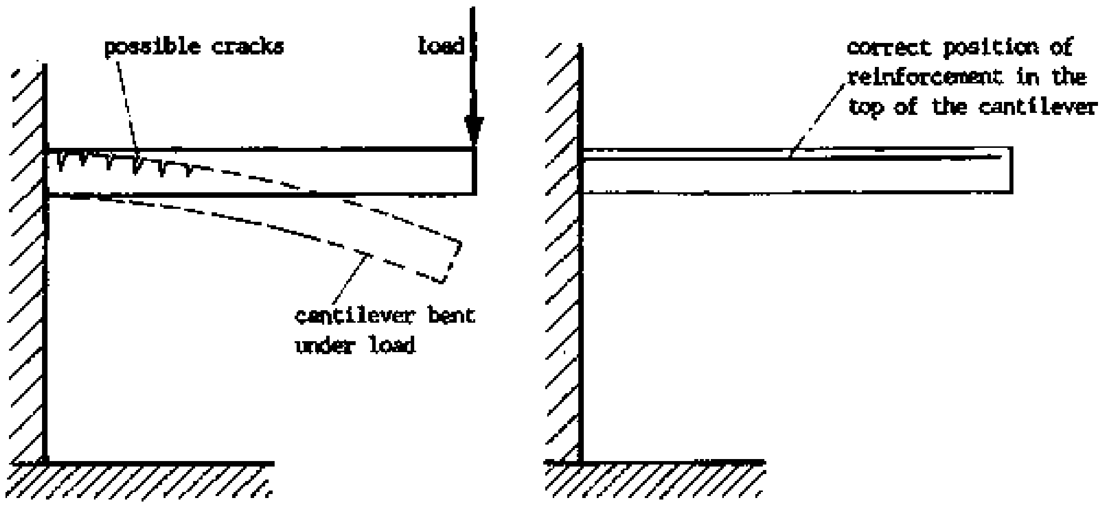

Example 3: Concrete Ring (when rolled on the ground or used as culvert)

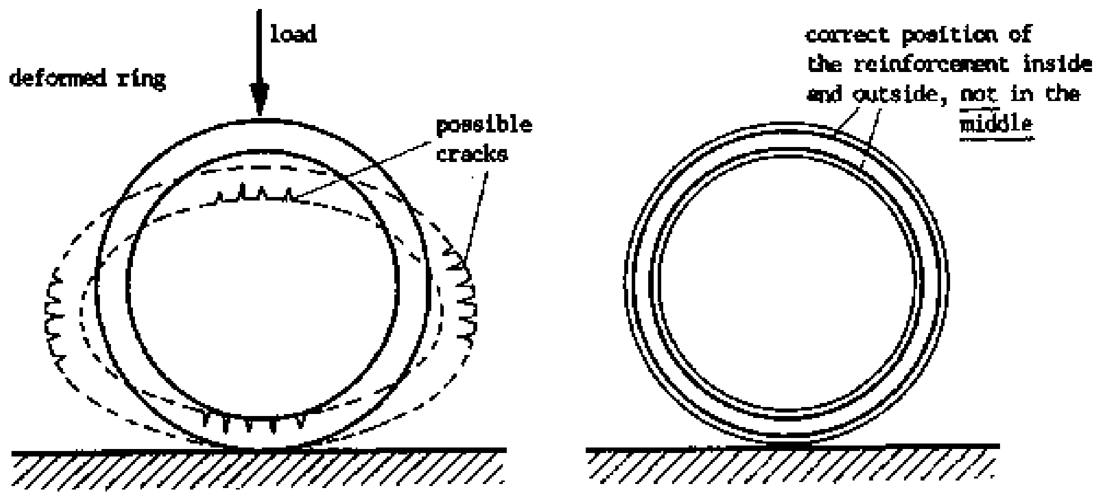

Example 4: Concrete Ring (in the well)

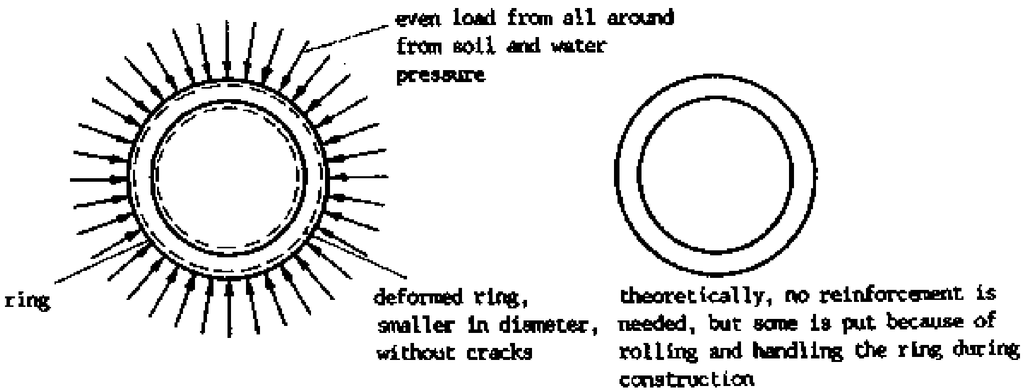

Example 5: Foundation Slabs for Buildings on Black Cotton Soil

Black cotton soil contracts and expands seriously according to the water content and develops big cracks in dry season. It can cause foundations and buildings to crack. Therefore, foundations for buildings on black cotton soil need to be reinforced.

The soil can make the foundation bend in two ways:

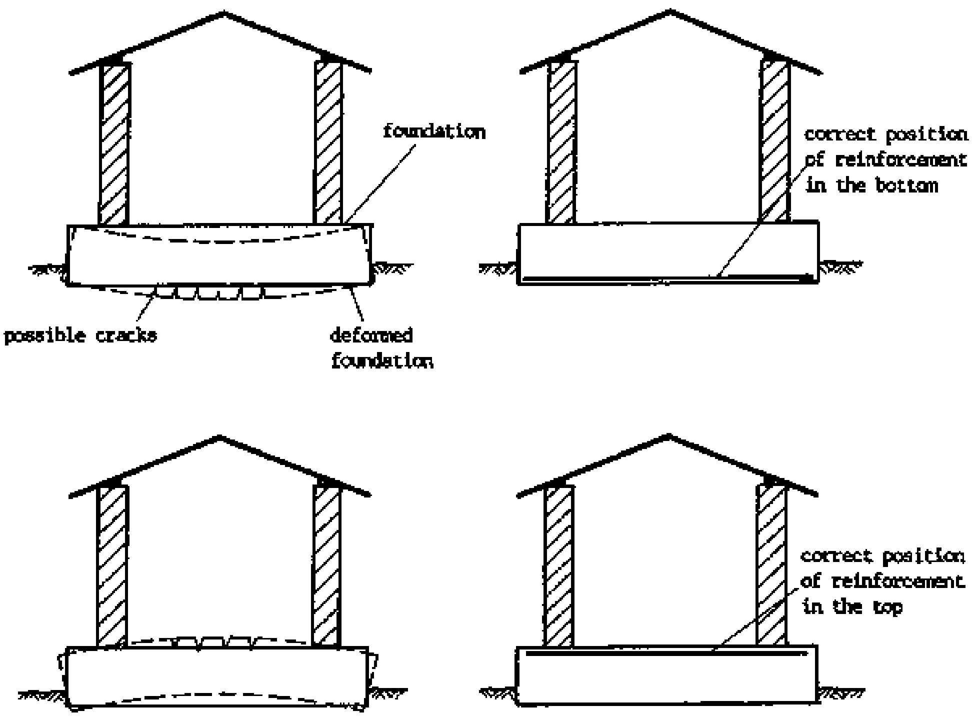

Therefore, reinforcement is needed in the top and the bottom of the foundation: not in the middle.

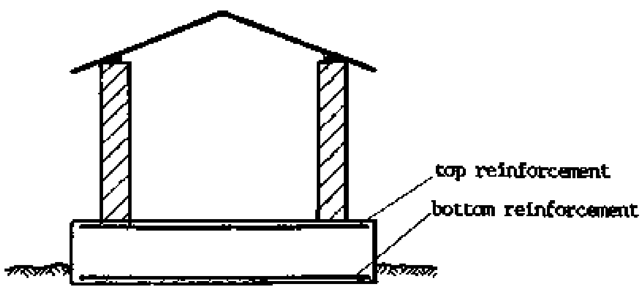

Example 6: Columns (can be bent into any direction; therefore, they need reinforcement in all corners)

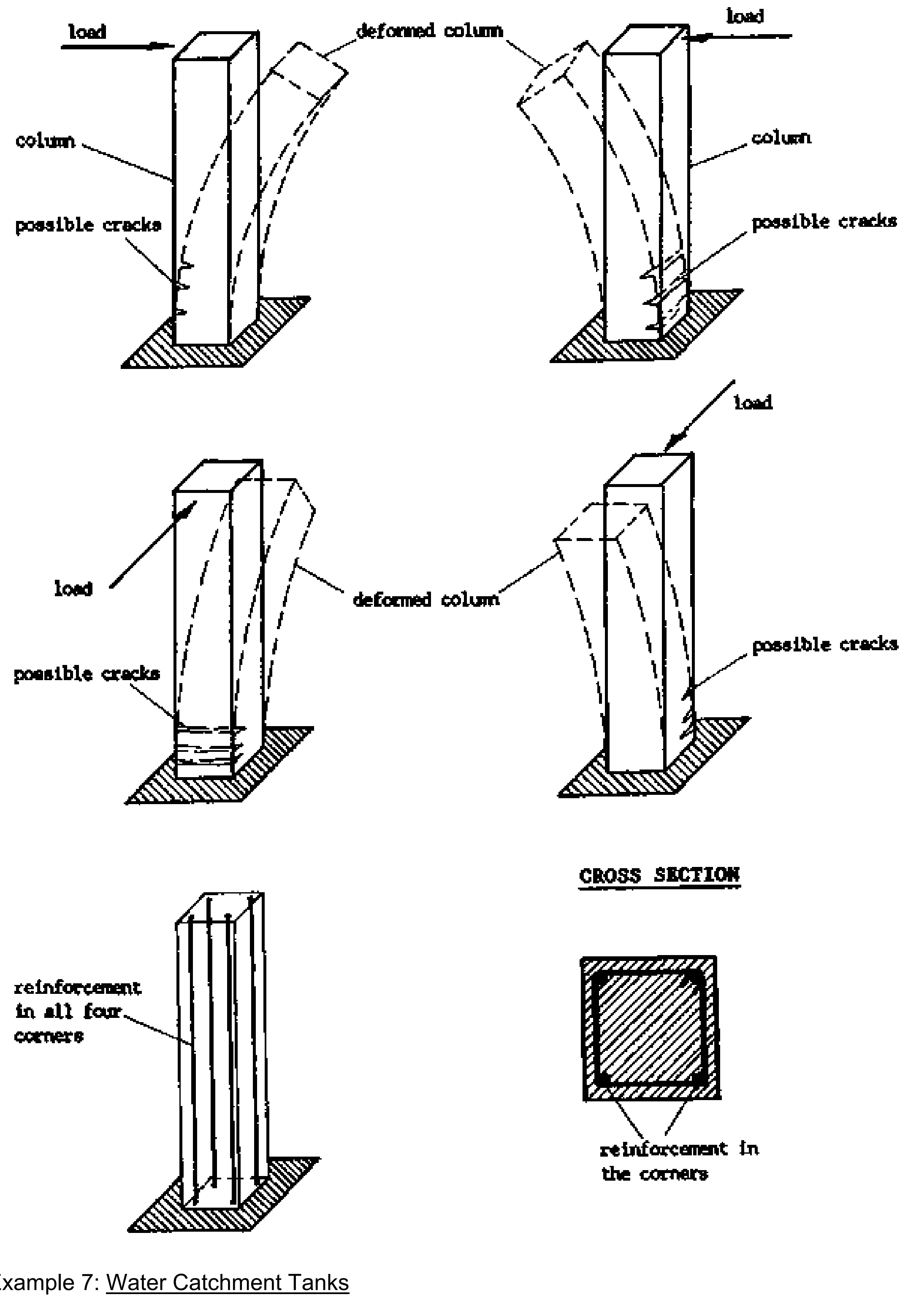

Example 7: Water Catchment Tanks

Water catchment tanks are continuously supported. Therefore, they do not need reinforcement to carry loads (to prevent bending). However, they are reinforced with welded mesh or chicken wire to prevent any cracks and ensure they are watertight.

3. <u>Ferrocement</u>

Ferrocement is cement mortar reinforced with chicken wire (or sometimes welded mesh). This reinforcement gives strength and ensures water tightness. The smaller the meshes of the reinforcement the better they prevent cracks in the mortar and, thus, ensure water tightness.

4. <u>Fibre Reinforced Concrete</u>

Fibre reinforced concrete is cement mortar reinforced with fibres. Short fibres which provide the tensile strength are mixed with cement mortar. Then the mixture is formed into diverse shapes like roofing sheets, pipes, etc.

The fibres used can be fibres from plants, like sugar cane, coconut, or sisal, or asbestos fibres. Asbestos is found in underground deposits. The mining and production of asbestos is very harmful to the health of the workers involved. Therefore, the use of asbestos should be avoided.

G) <u>Mixtures</u>

For good concrete, the ingredients must be in the right proportions. For example,

cement : sand : gravel = 1 : 3 : 4

That means:

Mix one part cement with three parts sand and four parts gravel.

We say that the amounts are in the ration 1 to 3 to 4.

Cement is always given as the first figure with 1.

Accordingly, if you need more concrete, you can mix:

1 x 2 = 2 buckets cement		$1 \times 1\frac{1}{2} = 1\frac{1}{2}$ buckets cement
3 x 2 = 6 buckets sand	<u>or</u>	$3 \times 1\frac{1}{2} = 4\frac{1}{2}$ buckets sand
4 x 2 = 8 buckets gravel		$4 \times 1\frac{1}{2} = 6$ buckets gravel

and still have the same proportion (= ratio).

The most important mixtures are:

Ratio	Concrete/Mortar	for
1 : 2 : 4	watertight concrete	water tank
1 : 3 : 4	very strong concrete	concrete rings for wells
1 : 4 : 3	easily workable concrete	latrine slabs
1 : 4 : 6	ordinary concrete	foundation, etc.
1 : 0 : 4	porous concrete	filter rings
1 : 2	very strong mortar	ferrocement
1 : 4	strong mortar	surface of well platform
1 : 8	ordinary mortar	plastering

6.7 Bricklaying

The most basic skills of brickwork, necessary for a water supply technician, are compiled here. They consist of building "half brick walls" and "one brick walls" necessary for compost latrine construction. Obviously, a fully trained bricklayer needs to know much more than is presented here.

A) Bricks

Bricks are made from fired (= burnt) clay. Clay soil is mixed with sufficient water; the mould is wetted; the clay is pressed into the mould; the surplus is removed, then the mould is removed. When dry, the brick is fired in a kiln.

The quality of hand-made bricks can vary a lot. It depends on the type of clay, the quality of manufacturing, the curing and the firing. The quality can be affected in the following ways:

1. Size: great variatons in size
2. Shape: curved bricks
3. Strength: easily breaking or crumbling bricks

It is an art to build straight and strong walls even with bricks of poor quality.

B) Mortars

Mortar is a composition of certain materials, used for the bedding and connecting of bricks in a wall. Mortar consists of the "body" (= aggregate), which is sand, the "binding" material, which is lime or cement or silt, and water.

1. Type of Sand

There are two varieties of sand: sharp and loamy. "Sharp" sand has sharp-cornered or angular grains, like this:

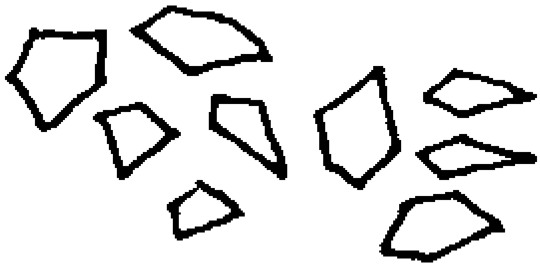

Mortar from sharp sand alone has great strength, but is not easy to work with.

“Loamy” or “soft” sand has rounded grains like this:

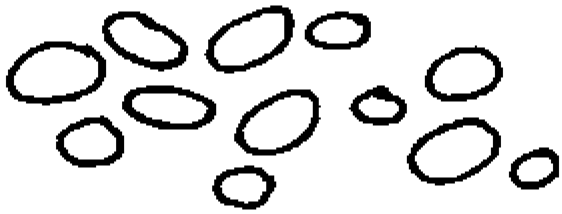

Mortar from loamy sand alone is weaker than mortar from sharp sand.

It is sticky and tends to hang to the trowel like glue. Sometimes, loamy sand tends to be clayey (i.e. has a clay content), and this type must not be used.

The best aggregate for a bricklayer’s mortar is a mixture of sharp an loamy sand.

2. Proportion of Mixture

If hard, dense bricks of very low porosity and high crushing strength are to be used, then a dense mortar (1:3) is suitable. If porous bricks of low crushing strength are to be used, then a lower grade mortar is suitable. (If a dense or strong mortar is used in conjunction with a porous type of brick, the mortar bed tends to shrink away from the bricks, leaving cracks.)

3. Amount of Water

The amount of water needs to be determined by experience, taking the temperature of the day into account. The mortar needs to be sufficiently fluid to allow the spreading on an even bed. Too much water, however, reduces the strength of the mortar.

C) Terminology

Special vocabulary is used in the bricklaying trade. Some words are explained here:

stretcher:	brick which is laid parallel to the wall	
header:	brick which is laid across the wall	
half-brick wall:	wall with the thickness of half of the length of a brick, built from stretchers only	
one-brick wall:	wall with the thickness of the length of a brick, built from stretchers and headers.	
$\frac{1}{2}$ bat:	cut brick of this shape:	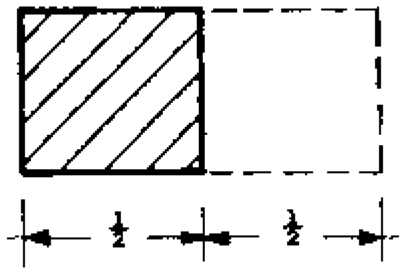
$\frac{3}{4}$ bat:	cut brick of this shape:	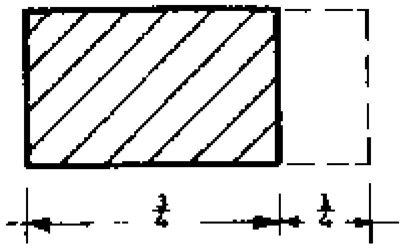
closer:	cut brick of this shape:	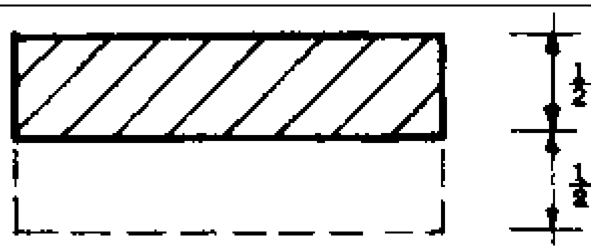

D) <u>Measurements</u>

In Sudan, you find bricks of many different sizes. However, the standard size is:

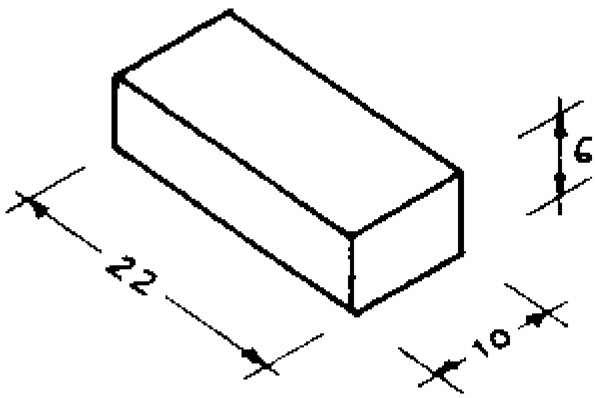

220 mm x 100 mm x 60 mm or 22 cm x 10 cm x 6 cm

20 mm are allowed for the thickness of the vertical mortar joint, 15 mm for the horizontal mortar joint. The space the brick occupies in a brickwall including the mortar joints is called nominal size. It is:

240 mm x 120 mm x 75 mm or 24 cm x 12 cm x 7.5 cm

The size of bricks is standardized in such a way that stretchers and headers can easily form a one-brick wall. Two stretchers in a wall with mortar in between are as wide as one header:

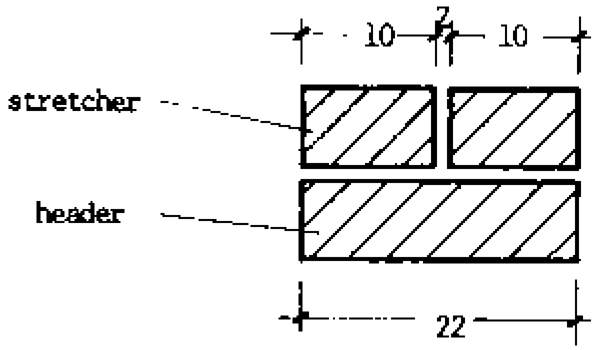

width of one brick:	10 cm
width of one brick:	10 cm
width of mortar joint:	2 cm
length of one brick:	22 cm

In height, 4 rows (= courses) of bricks must equal 30 cm. Each course must equal 7.5 cm.

Measure always from/to the top of a brick in a course.

Four courses to 30 cm!

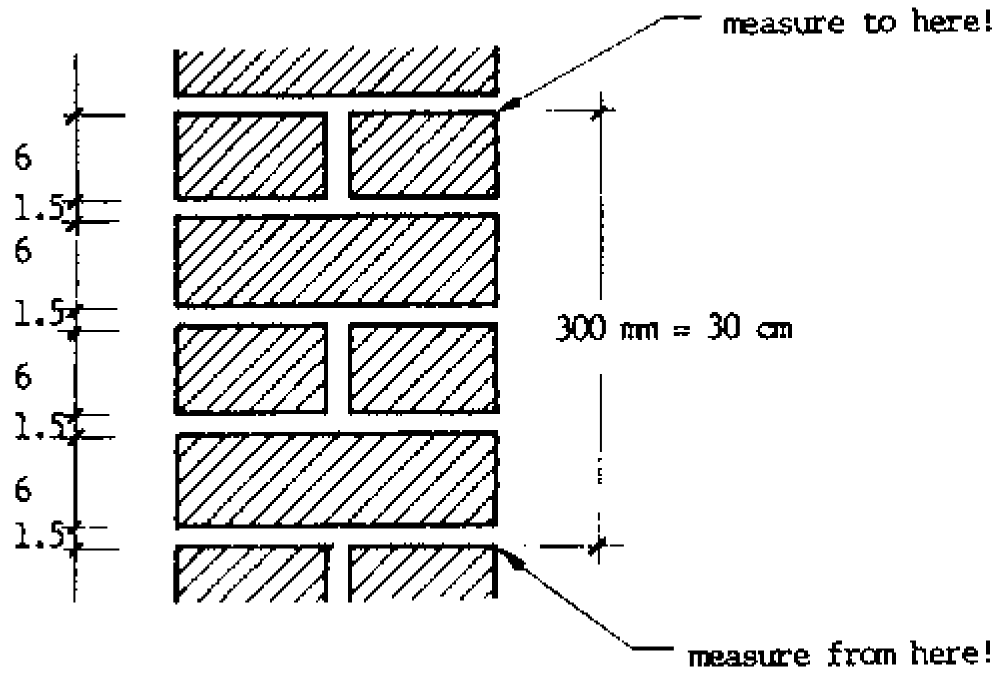

4 x 6 cm =	24 cm
4 x 1.5 cm =	6 cm
	30 cm

Along the wall, 5 stretchers with their joints must equal 120 cm = 1.20 m

Five stretchers to 120 cm!

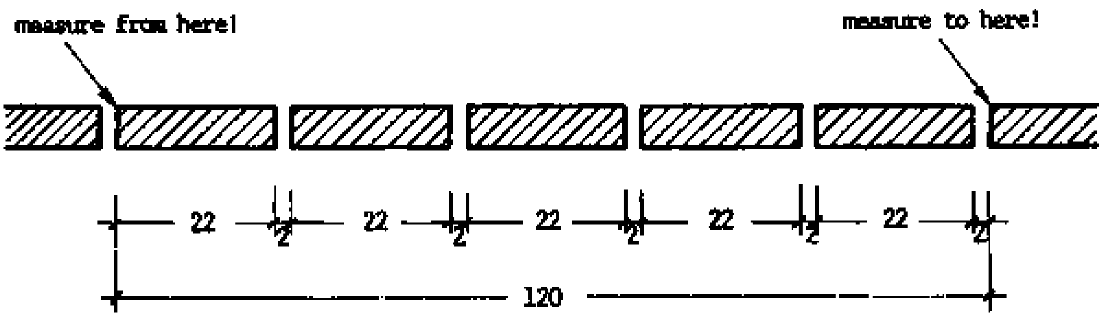

5 x 22 cm =	110 cm
5 x 2 cm =	10 cm
	120 cm

To determine how many bricks make up a wall, divide the length of the wall by the nominal length of the brick. Small differences can be balanced by increasing or decreasing mortar joints sizes. These measurements are valid for bricks which keep more or less to the standard size and shape. For high quality bricks which keep more exactly to the standard size, the mortar joint may be only 1 cm thick.

D) Bonding of Brickwork

To maintain strength, bricks must be lapped one over the other in successive courses. A quarter-brick lap is called “quarter-bond”, a half-brick lap is called “half-bond”. If the lap is greater or smaller than these, both appearance and strength are affected. If bricks are so placed that no lap occurs, then the “cross joints” (= vertical joints) are directly over each other, and this is called “straight joint”. An “external straight joint” appears on the face of the wall; an “internal straight joint” occurs inside the wall.

<u>Half-Brick Wall</u>

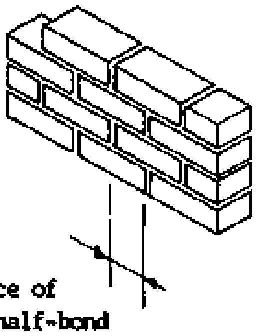

<u>One-Brick Wall</u>

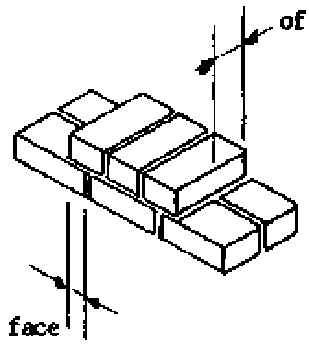

If no closer is inserted, straight joints, either internal or external, occur:

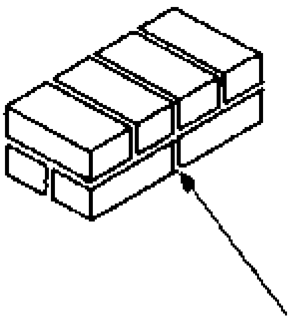

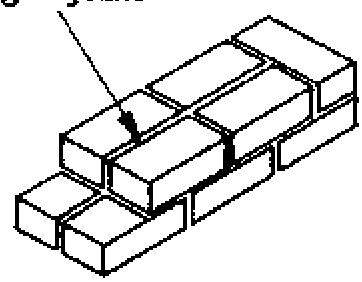

In the following, the bonding of half-brick wall (= stretcher bond) and one-brick wall (= English bond) shall be discussed only. These two types are mostly used in hot climates. The bonding of a one-and-a-half-brick wall (occuring in cold climates) is much more complicated.

For each type of wall we need to know how to build

- the straight wall,
- a stopped end (for doors and windows),
- a corner,
- a T-joint (= cross wall).

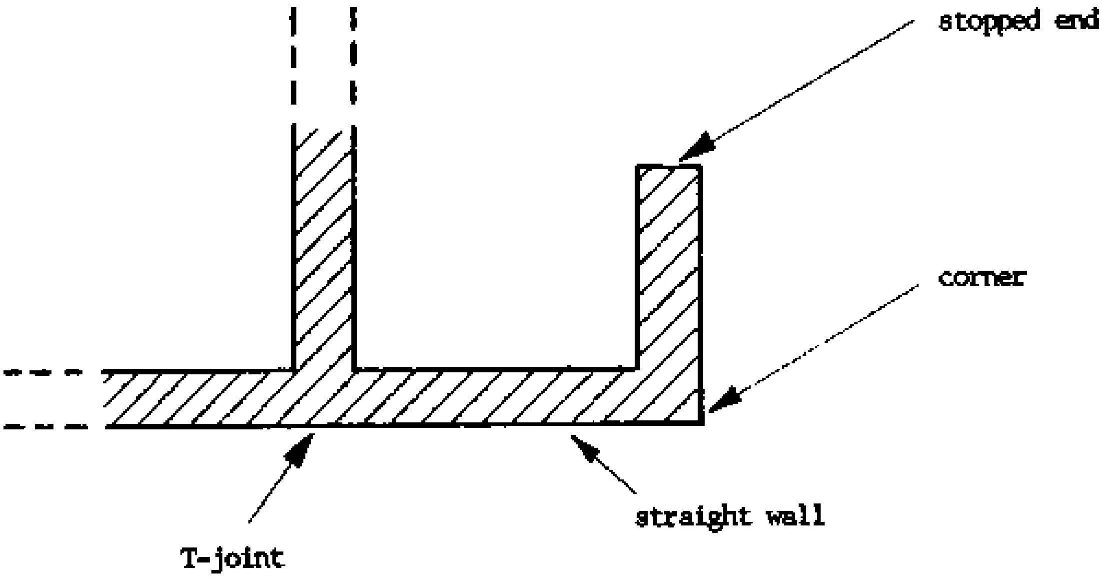

The basic rules of bonding are:

1. Avoid external straight joints <u>at all times</u> and 2. Avoid internal straight joints <u>wherever possible</u>. 3. Use whole bricks wherever possible.

Applied to the different types of bonds and walls this leads to specific rules:

1. <u>Half-Brick Wall in Stretcher Bond</u>

Half-brick walls are built in stretcher bond, consisting entirely of stretchers. Keep to the following rules:

1. Maintain half-bond at all times (except T-joints). 2. No bats are necessary for a corner. 3. Use half-bats for a stopped end. 4. Use 2 three-quarter bats for T-joints.

<u>First Course</u>

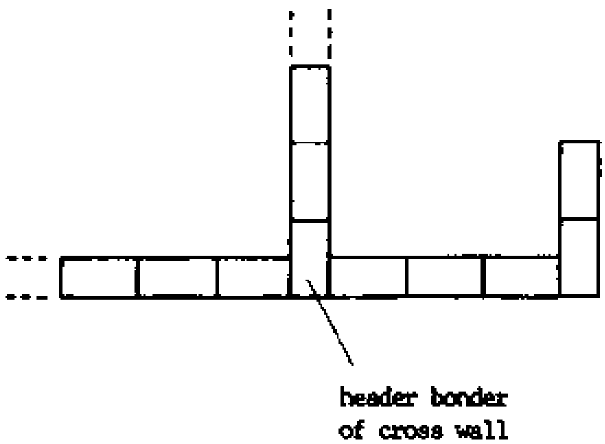

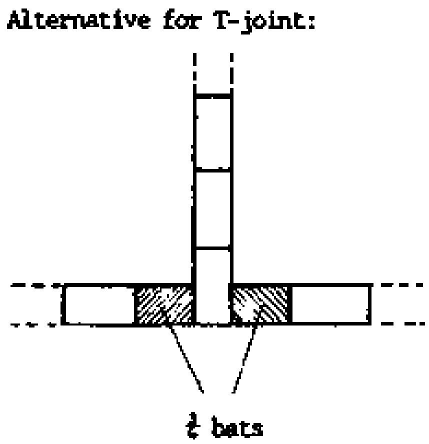

Second Course

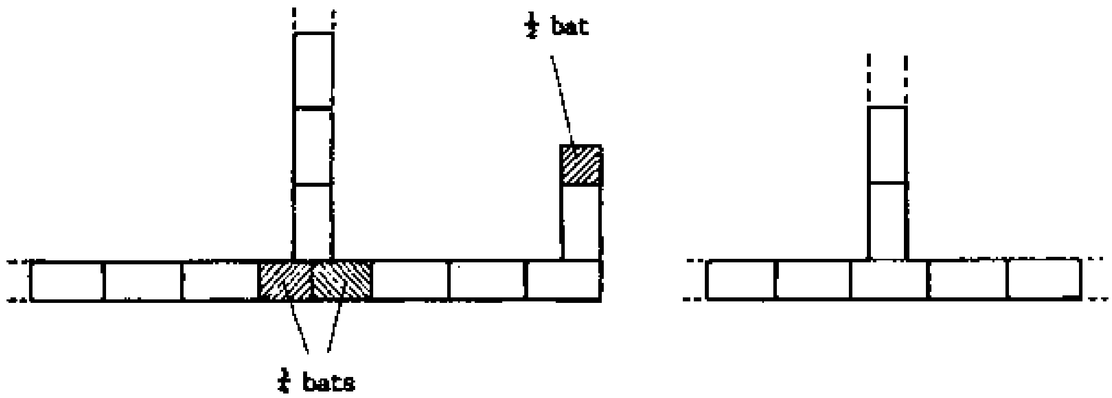

Front View

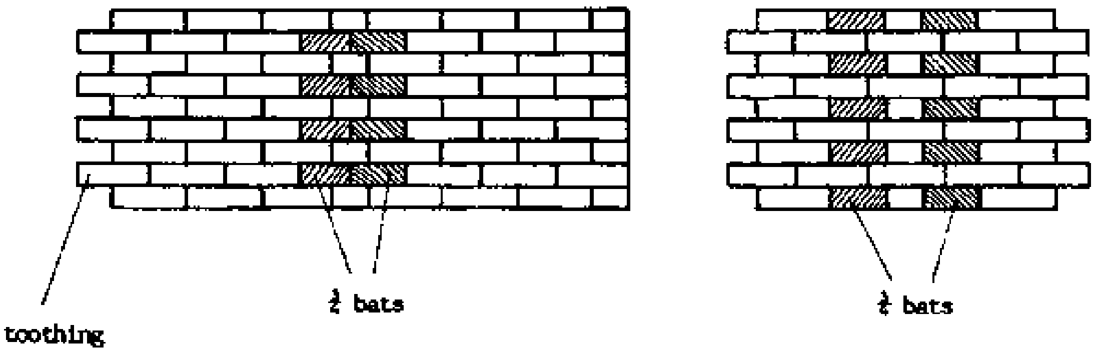

Isometric View

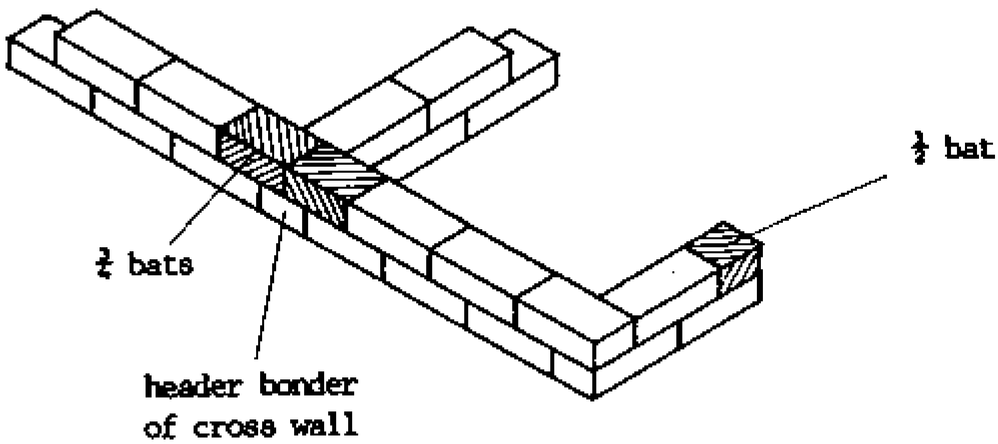

If the first two courses have been set out correctly, they repeat themselves, and the vertical joints in every other course will be upright or “plumb”. The bricklayer checks this by plumbing the vertical joints at every 90 cm or so, along the wall.

2. One-Brick Wall in English Bond

One-brick wall can be built in English or Flemish bond. The latter will not be discussed here. English bond consists of alternate courses of headers and stretchers. It is a very strong bond without any straight joints.

Keep to the following rules:

1. Maintain quarter-bond at all times.

2. A closer (= a brick cut half along its length) must follow the corner header.

3. A closer must follow the last header of a stopped end.

4. A closer must follow the stretcher of a T-joint.

5. In every change of direction on the same course the bond changes from stretcher to header and the other way round.

First Course

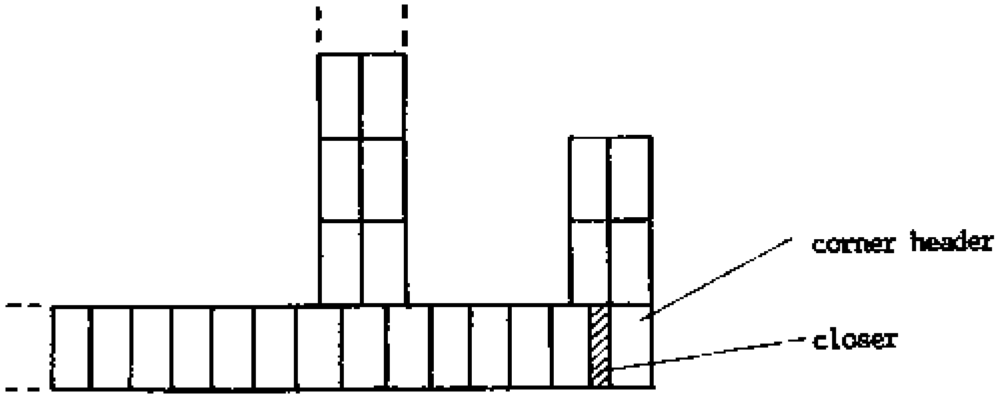

Second Course

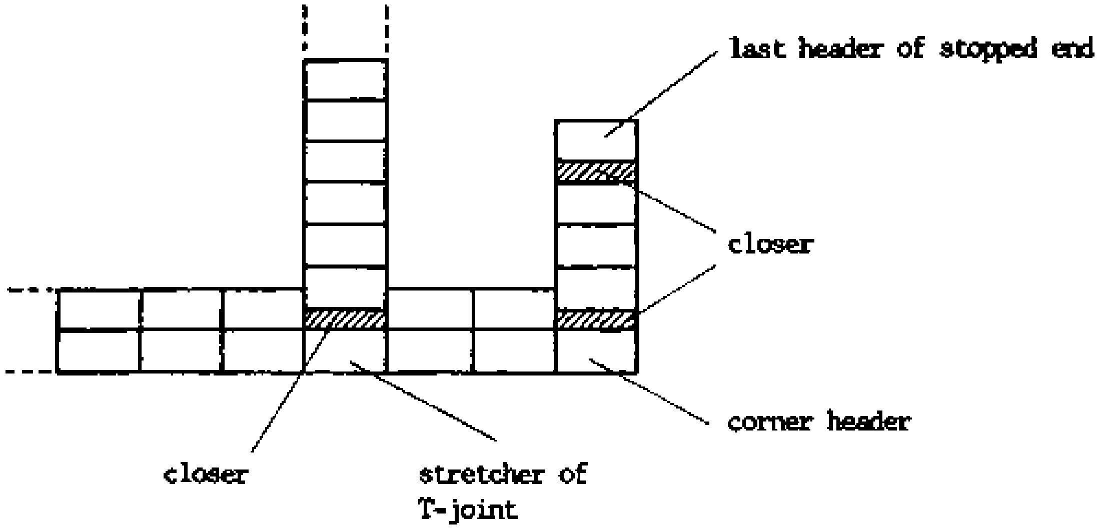

Front View

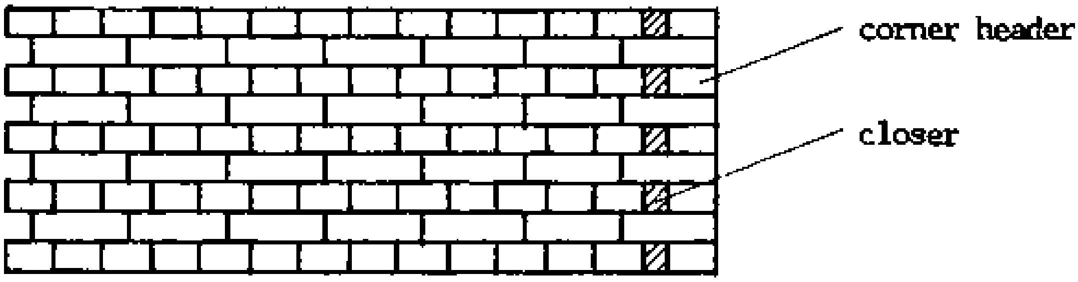

Isometric View

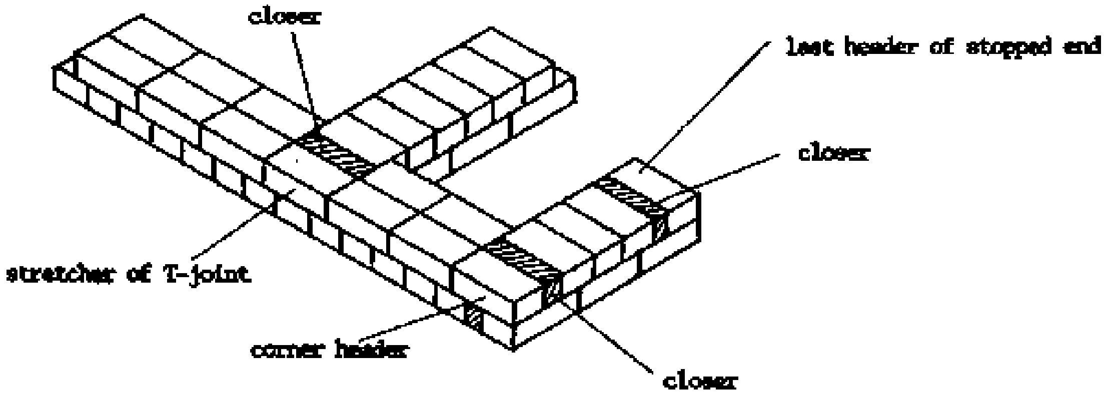

The first two courses repeat themselves when you continue to build the wall.

3. Broken Bond

If the length of a wall does not fit to brick size, a cut brick must be inserted somewhere in the length of the wall to make up its size. The cut brick should not be less than half-brick. The usual procedure is to set out the correct bond from each end of the wall, placing the broken bond as near the centre as possible. However, if there is little difference, the increasing or decreasing of mortar joint sizes will often allow complete bricks to be used.

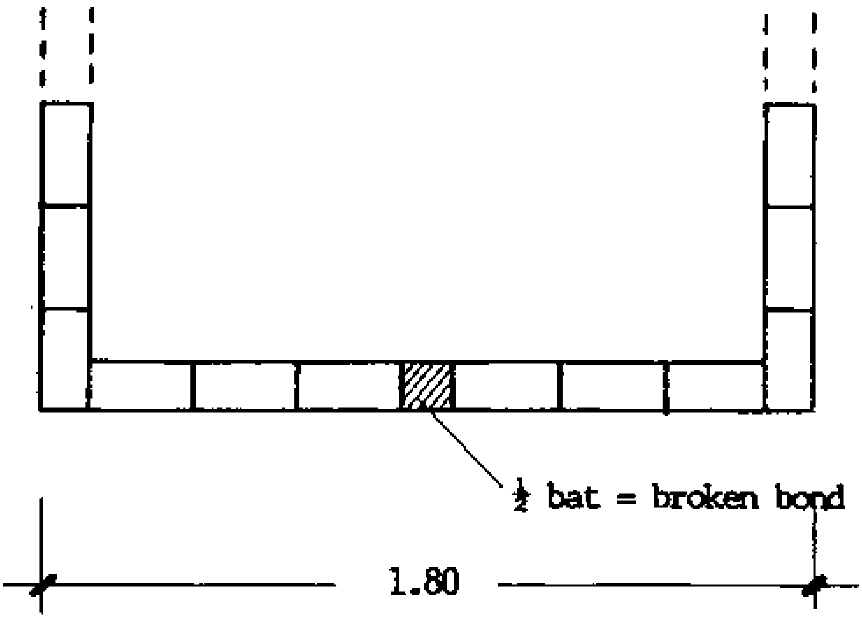

Some techniques on how to do good brickwork are explained here.

1. Basic Principles

Two basic principles help to do good brickwork:

1. Never allow quality to be sacrificed for speed. 2. Maintain general cleanliness.

Especially the beginner should never allow quality to be sacrificed for speed which will be attained by constant practice. Never allow brick rubble and mortar droppings to collect under your feet. A clean working place, clean mortar board and general cleanliness are important. Mortar should never be allowed to harden on the blade of the trowel, as this creates a rough surface and prevents free and easy movements when picking up and spreading mortar. Clean all tools after work. Your working place should be organised: piled bricks and mortar at a convenient distance.

2. Operation

The main bricklaying operation is spreading the mortar to an even bed. This needs practice and a keen eye. Always wet bricks before laying them by dipping them into a bucket of water. This will wash off surplus dust and prevent undue absorption of moisture from the mortar bed. Do not grasp the trowel as if clenching the fist, but place the thumb on the handle lightly so that a flexible wrist action is possible. Pick up the mortar with an easy sweeping motion and spread it on the wall sufficiently thick to allow the brick to be placed by pressure of the hand. Do not place too much mortar under the brick, because this will require considerable hammering before the brick reaches its final position.

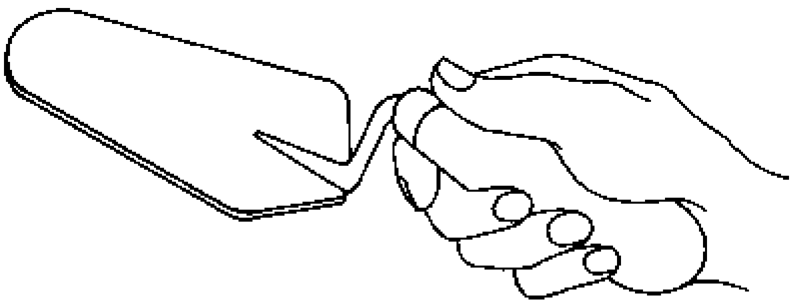

Method of grasping the brick-trowel

If bricks are curved, it is difficult to keep a flat surface of the wall and to prevent “hatching and grinning”.

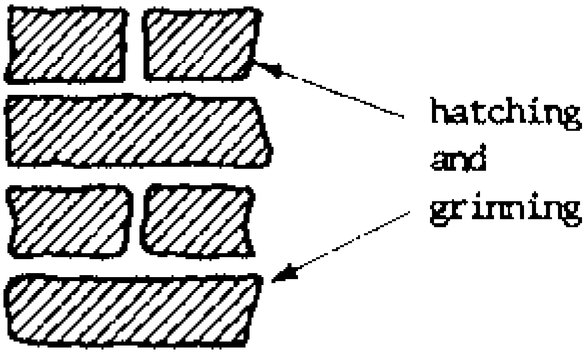

f bricks are curved, lay them always with the curve upwards like this:

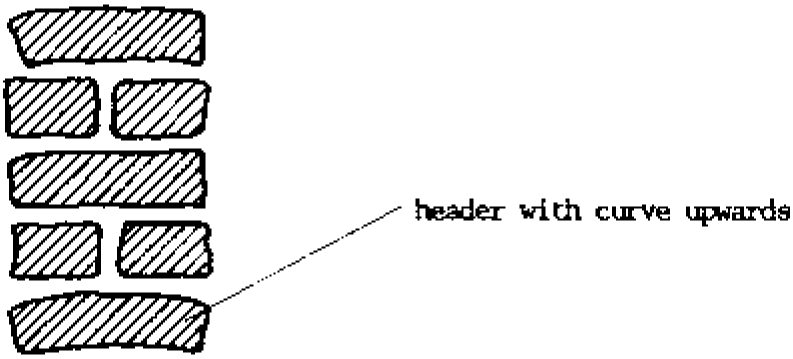

Never lay them with the depression upwards, because this makes the laying of the next course difficult:

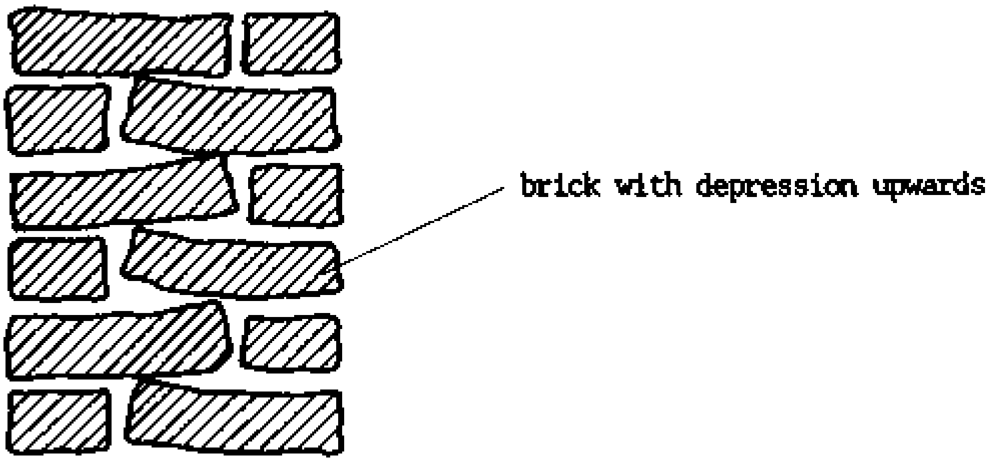

3. Keeping to Measurements

Normally, corners are erected ahead of time before building the walls. First, erect approximately six courses of brickwork at the corners. Make sure that the corner is plumb by using the spirit level or plumb bob. Use a straight edge to make sure that the wall is in alignment. Make sure that the thickness of the courses is kept by a gauge peg. The wall itself is to be racked back.

Building for level:

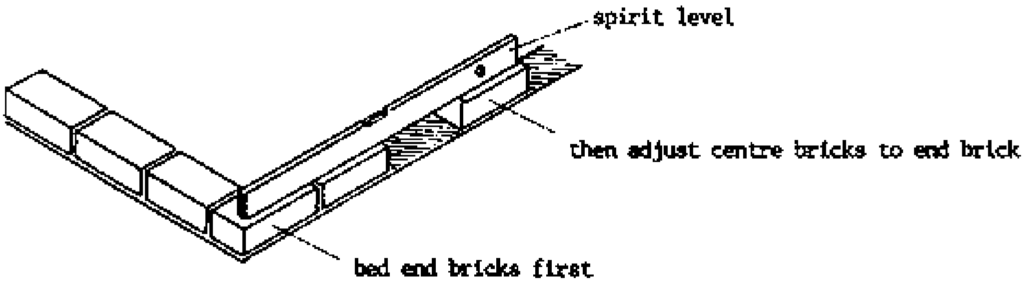

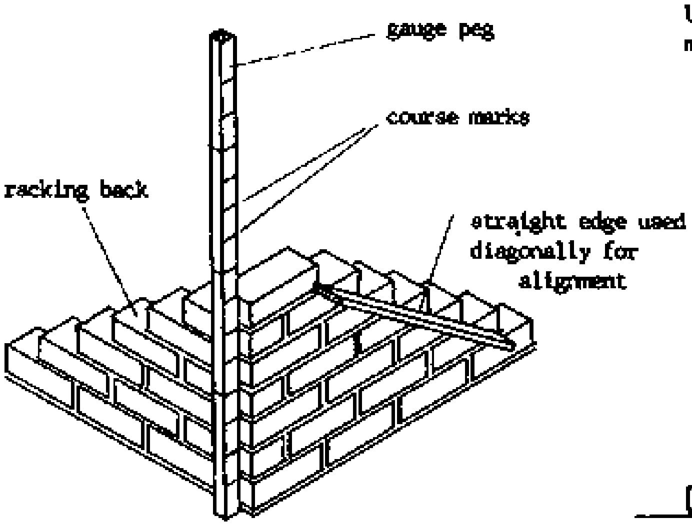

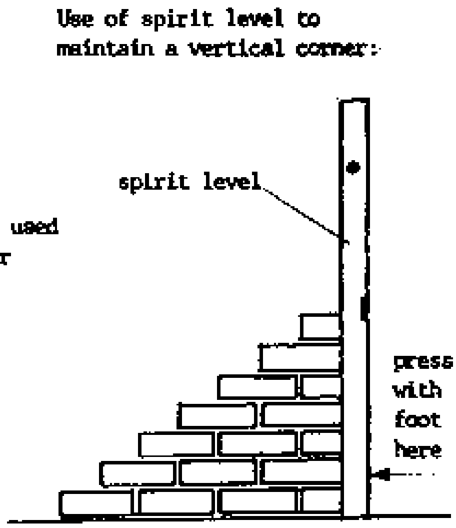

Then use a line and pin for building the straight walls or use two wooden corner blocks.

Use of line and pin:

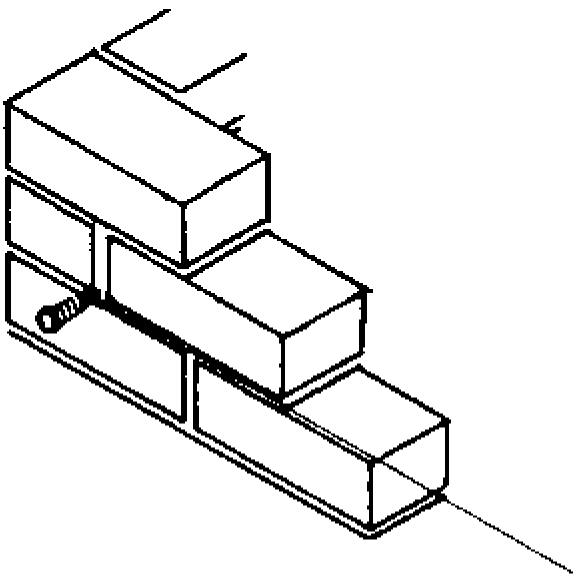

Use of wooden corner blocks: wooden corner block

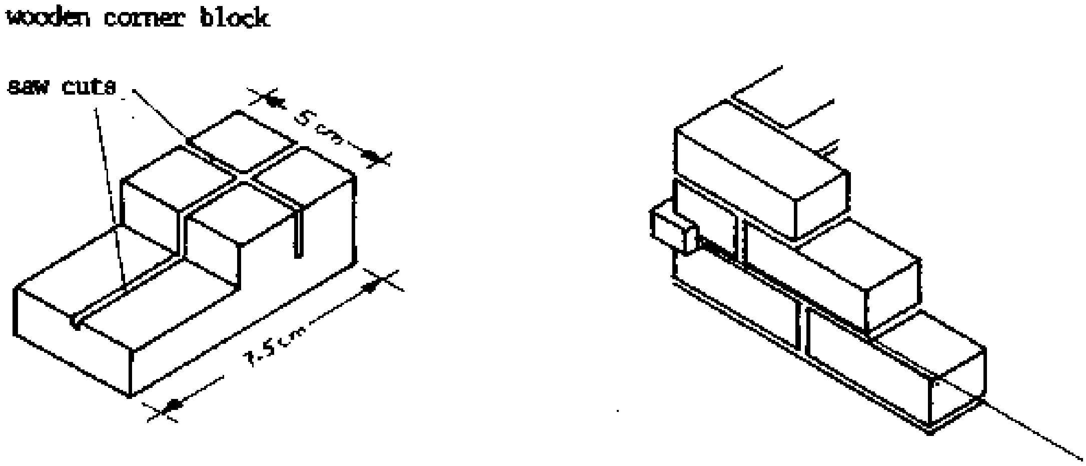

When laying bricks along a line, always ensure that a trace of daylight can be seen between the line and the brick. This prevents the laying of the bricks too hard to the line. To keep the wall flat (= to prevent hatching and grinning), imagine laying the outside surface of the brick parallel to the line and the edge of the last course. Watch out for this even if it means that the surface of the course is not level.

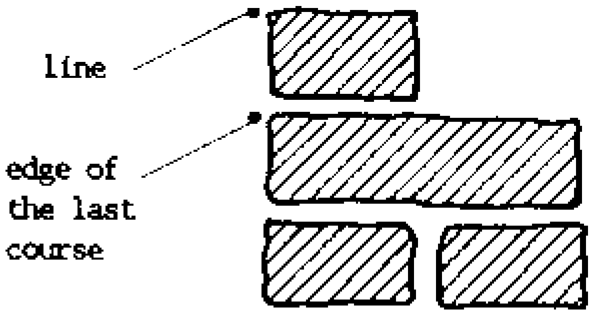

If the bricks are of uneven shape, only one side of the wall can be built flat, either inside or outside.

6.8 Improved Local Building

The technologies on how to build with local materials like poles, earth, bamboos, grass, etc. are widely known and are not to be described here. However, some suggestions for improvements are compiled here, both for a house constructed from poles and earth, and for a mudblock house. Select the suggestions which are possible and suitable for your conditions.

A) Measures without Additional Costs

1. Build your house, especially a two-room house, in an East-West direction. The rising and the setting sun should shine on the smaller walls. The sun should never shine on the longer walls. This will make your house cooler.

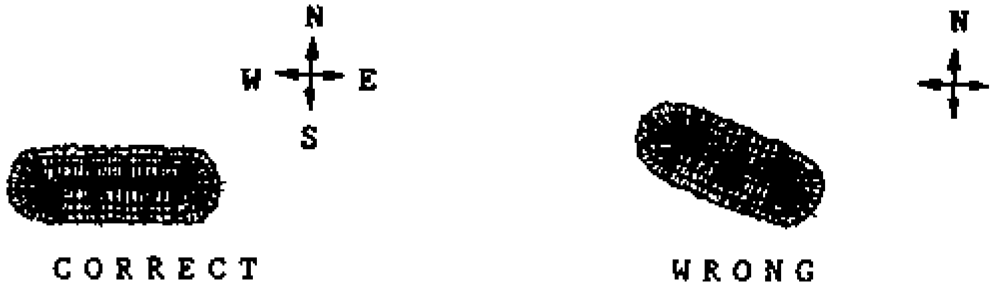

2. If possible, build your house with a shade-giving tree on the eastern and/or western side of the house

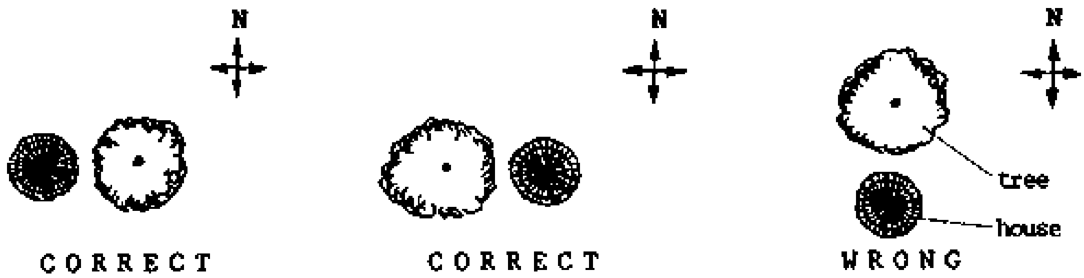

3. Plant trees on the east and west sides of your house.

4. Cut the poles and bamboos in dry season.

5. Choose ant-resistant types of wood.

6. Store them in an elevated place, not directly on the ground.

7. Before building, check the mud with the following tests:

a) **Sedimentation Test**

- Take a transparent glass jar of one litre or more with a sufficiently wide top opening; it must be cylindrical with a flat bottom.

- Fill the jar upto one quarter of its height with the soil to be used for building.

- Add clean water up to the top of the jar.

- Close the jar with your hand and shake it well until water and soil are thoroughly mixed.

- Put the jar on a level surface.

- After one hour, shake the jar well and put it on a level surface again. Now the jar must be left untouched without any movement.

- After 45 minutes, you can measure the thickness of each of the different layers and compare each with the total thickness of all the soil in the jar. This gives you the percentage of the amount of gravel, sand, clay, and silt in the soil.

- Soil suitable for building should consist of at least 33% sand and between 5% and 30% clay/silt. If the soil is not suitable, add sand or clay accordingly. A good mixture for example would be

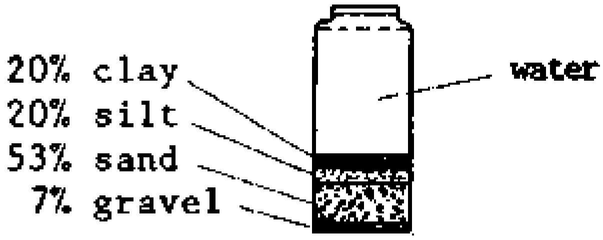

b) **Compaction Test**

- Take a handful of dry, screened (= sieved) earth and moisten it until it is damp enough to form a ball. It should not be so damp that it will leave more than a slight trace of water on your hand.

- Drop the ball from the height of your shoulders onto hard ground. If the ball breaks into a few smaller pieces, the mixture is all right. If it breaks into many pieces, it contains too much sand. If it does not break into any pieces, it contains too much clay and silt for building.

8. Build with mudblocks, if possible.

9. If you build with mudblocks, build a foundation either of mudblocks or of stones.

10. Build the inside floor 10 cm higher than the ground level outside.

11. Mix sand or the soil of anthills or cow dung or merissa residue into the mud for smearing floor and walls.

12. Plaster the walls and use a trowel to smear the floor.

13. Keep all fresh mud work out of the sun.

14. Provide enough ventilation.

15. Leave sufficient space between wall and roof in order to be able to clean the termites away.

16. Fix old tins between the wall and the roof truss to hinder the termites.

17. Protect the wall bottom from being washed out as illustrated in this drawing:

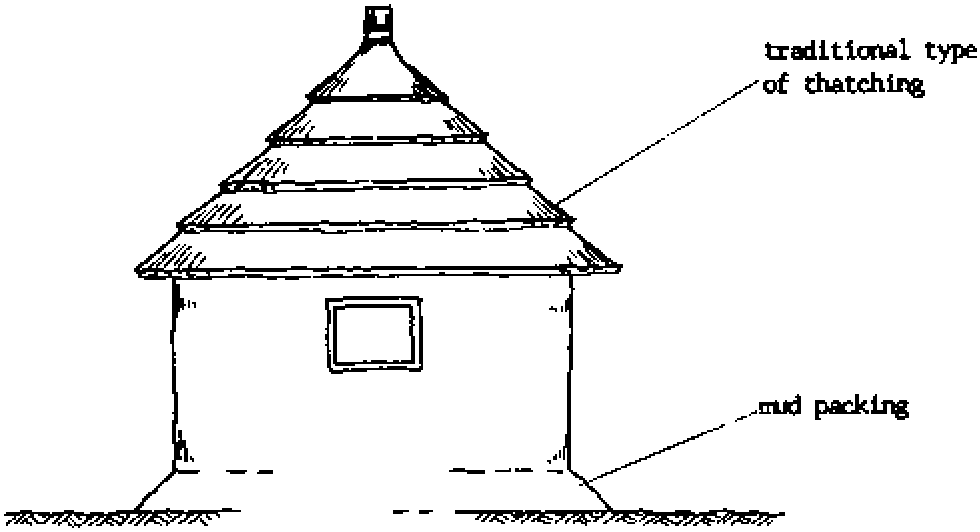

18. Dig a drainage ditch around your house, if necessary.

19. Smear and repair the house frequently. Especially, repair cracks immediately, if possible.

B) Measures with Additional Costs

1. If you build with poles and earth, build the structure for the roof separately from the walls. The poles should not touch the walls at any point in order to control termites.

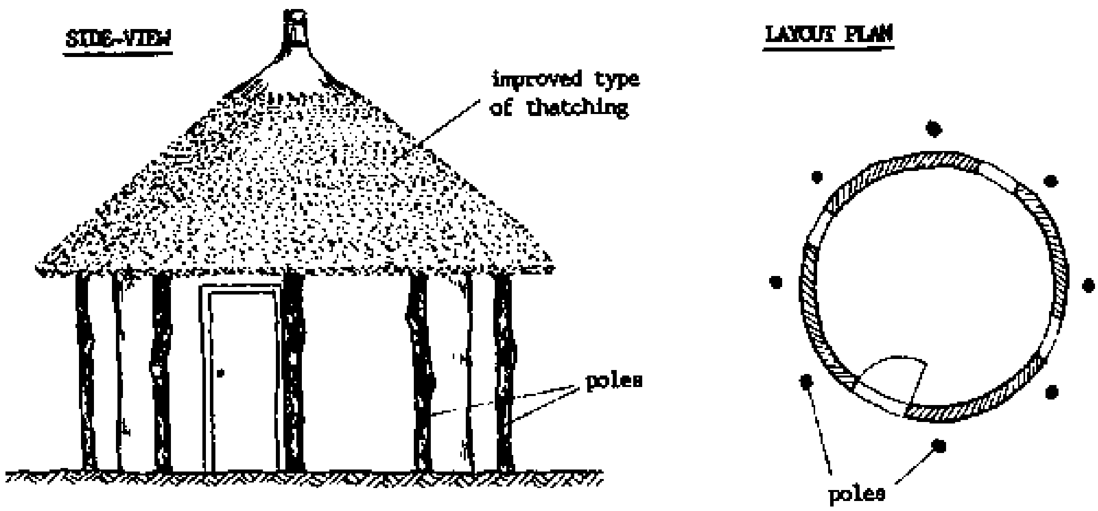

2. If you build with mudblocks, build an ant course from concrete with two layers chickenwire, 5 cm thick. It is extremely important, to keep the concrete wet for 7 days to prevent cracks which would allow termites to penetrate (see 6.6/7).

Alternatively, you can use bituminous foil or flattened zinc sheets for an ant course. They must be 10 cm above floor level and folded at the joints.

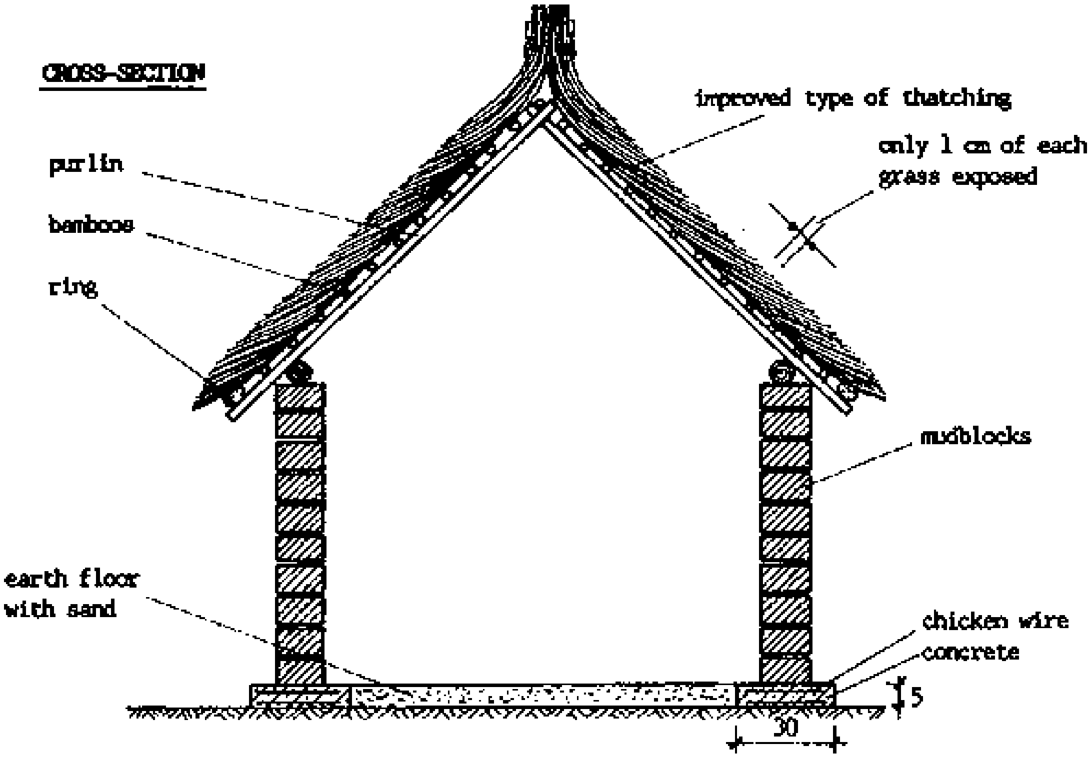

3. Build the walls higher than in the traditional way.

4. Build big windows with shutters on the opposite side of the building.

5. Fix mosquito screening between walls and roof.

6. Thatch with the improved thatching method which builds a roof with a continuous surface without steps. This method requires about 507. more grass, but lasts many years longer. More information is available from the Support Unit, Community Development Department, Juba, or from the literature.

7. Building Administration

7.1 Planning

Realistic planning is essential for properly organizing the work and to avoid confusion and disappointment of communities and owners. Planning helps to streamline one's efforts, to prepare everything in time for the work, and to avoid unnecessary delays. However, planning should be a helpful tool, not a rigid principle to enforce. Therefore, plans should be made and, if necessary, altered according to circumstances. Having to alter your plans should not discourage you from doing any planning at all. The benefits of regular planning will show in the long run.

Planning of construction work is best done in four steps: checking the resources needed, timing, filling the diary, and preparing lists of materials and equipments.

A) <u>Checking the Resources Needed</u>

When you plan practical construction work, always use the following check list:

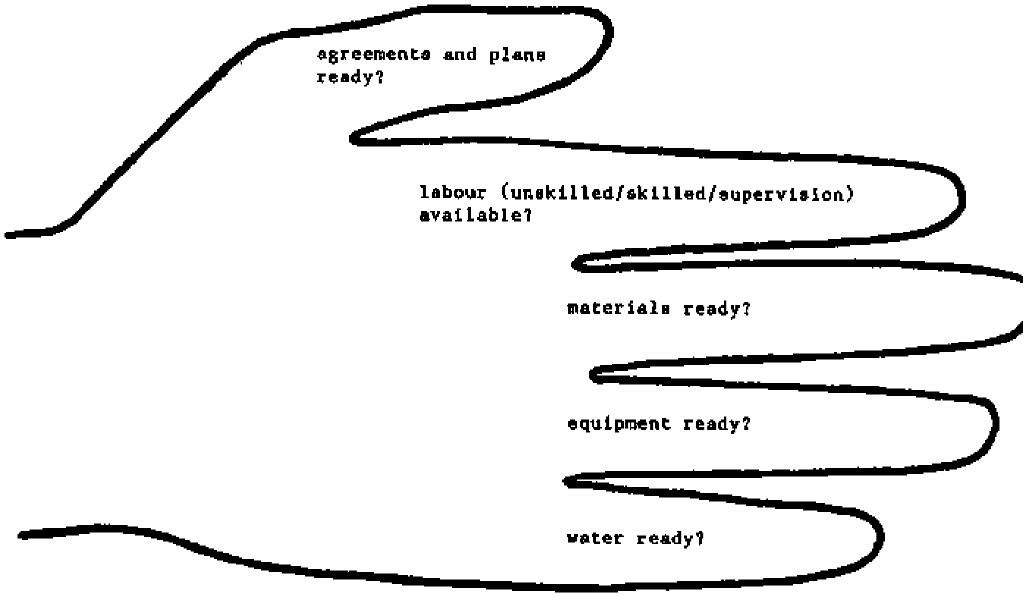

Carefully check all these points:

- Did all parties agree on the work to be done?
- Are the technical plans (drawings etc.) ready?
- Is skilled labour available?
- Is unskilled labour available?
- Is supervision possible?
- What materials are needed? Are storage facilities available on-site?
- What equipment is needed? Are storage facilities available on-site?
- Is water available and ready?

If any of these elements is not available in sufficient quantity, the work can not run smoothly.

B) Timing

The timing of building work is done mostly with what is called a “bar chart”. The sequence of work mostly depends on the first two “fingers”, i.e. “Are agreement and technical plans ready?”, and “Is the labour available?”

The form, “WORKPLAN”, is for bar chart planning for the whole project for one month. It is to be used as follows:

WORK PLAN	Fill in the department, month and year.
DATE	Check on which day the first of the month falls; if it is a Wednesday for example, write 1 below We, 2 below Th and 3 below Fr. Sa and Su would be the 4th and the 5th, so write 6 below Mo, 7 below Tu and so on. Cross out any public holiday.
WORK	Write the different work to be done, e.g. latrine No.12, latrine No.13, well No.7, work in the workshop, etc. Only work which takes several days to complete should be recorded.

PLANNING	Mark the days planned for working on latrine No.12 with crosses in pencil, e.g. XXX. If you have two teams who can work parallel, work can overlap. Otherwise, the work on the next latrine, No.13, can only start after No.12 has been finished. In the bar chart, it will look like this:
	XXXXX
	    XXXXX
	        XXXXX
	The time needed for certain work to be completed is to be estimated according to experience. Plan sufficient time for cleaning and for working in the store, etc.

RECORDING It is advisable to use the same form for recording actual work done as well. For example, mark the days on which work on a certain latrine actually took place with red boxes:

The work records have to be entered daily. Thus it will become clear whether or not the timing and the estimated duration of work were correct.

The planning and the filling in of the WORK PLAN is done by the project management team. A copy can be given to the foreman or to the technicians, to be fixed on a noteboard in the workshop.

C) Filling in the Diary

After the overall timing has been fixed, the work is to be planned in detail. Check the last three “fingers” - that is, materials, equipment, and water - and decide when you have to make them available on site according to the bar chart.

Fill in your diary under the appropriate date; for example,

- transport of 5,000 bricks to site,
- transport of six drums water to site,
- transport of building box, etc. to site,
- (instruct, tell) labourers to report to site tomorrow,
- etc.

D) Preparing List of Materials and Equipment

Write lists of materials and equipment needed, either directly into your diary or on separate sheets. The list shall contain all materials and equipment with their quantities.

E) Planning Work for a New Site

Beside the planning as described in A to D, specific planning is necessary before starting work on a new site. Consider the following aspects:

- Where can materials be stored on-site or as near as possible?
- Where can equipment be stored on-site or as near as possible?
- Where can the staff get accomodation (for far-away sites)?
- Which means of transport can the staff use (for near sites)?
- What are the arrangements for feeding?
- How shall communication be kept up between the staff and the office?

For a big building task it is necessary to draw a site plan containing the following:

- the boundaries of the construction site,
- the connection to roads,
- location and size of existing buildings,
- vegetation on site (trees, etc.),
- storage facilities for materials,
- storage facilities for equipment,
- staff accomodation,
- feeding place,
- the north direction,
- the slope of the area,
- eventually necessary drainage channels.

Sudan Council of Churches/Munuki Water and Sanitation Project

WORK PLAN

Department/Area: **WATER SUPPLY**
Month: **JULY**
Year: **1987**

Work	Day	Mo	Tu	We	Th	Fr	Mo	Tu	We	Th	Fr	Mo	Tu	We	Th	Fr	Mo	Tu	We	Th	Fr	Mo	Tu	We	Th	Fr
	Date			1	2	3	6	7	8	9	10	13	14	15	16	17	20	21	22	23	24	27	28	29	30	31
CL No. 12				X	X	X	X	X	X	X																
CL No. 13											X	X	X	X	X	X	X									
Cleaning Store																		X	X	X						
Well No. 7																					X	X	X	X	X	X

7.2 Work Records

Daily work records are essential, for the following reasons:

1. for the final cost calculation after completion of the well, latrine, etc.;

2. for future estimations of the number of labourers and amount of materials necessary;

3. for deciding if the concrete has already cured enough for further steps;

4. for settling any disputes that may develop with the community or the owner.

Keeping the Work Records

The work records are to be kept by the foreman or technician responsible on site. He/she has to keep the "WORK RECORDS" form (preferably in a protecting plastic envelope) on site with the tools, and has to enter records daily. After completion of the on-site work, the work records are to be handed in to the office for filing.

The work records are to be filled in as follows (see 7.2/3f; 7.4/5f):

WELL No. or LATRINE No.	The number of the well or latrine and the name of the community or owner and location need to be recorded.
DATE	There is one entry for each day.
SCC STAFF	The project staff are to be listed with the abbreviations of their names.
LABOURERS COMMUNITY	The total number of the labourers in the community or the owner present during the whole working day in accordance with the leader of the community workers is to be recorded, including the people caring for food.
WORK	The type of work is to be put into numbers, if possible, e.g. casting 1 concrete ring, ∅ 1.07 m, filter type; digging 0.6 m; etc.

CEMENT	Can be recorded in number of buckets or bags.
SAND/GRAVEL	To be estimated in number of buckets.
MIXTURE	The ratio of the concrete or mortar mixture is to be recorded; e.g., 1 : 3 : 4 (Cement: Sand: Gravel) (see 6.6/13f).
OTHER MATERIALS	All other materials are to be quantified; e.g., 6 m reinforcement ∅ 6 mm, 1 pc welded mesh, 1 handpump body, 400 bricks. Do not forget small materials like padlocks, handles, etc. Do not forget materials provided by the community, like poles, etc.
WATER TABLE	Each morning, the water table should be recorded, in metres from ground level, in order to check the yield of the well during the night.
WELL BOTTOM	The records kept of the depth of the well indicate the progress of the digging work.
SOIL	The soil type (like whitish clay, sand, clay with gravel) along with all changes in the soil type, need to be recorded. This helps for later evaluation of the soil conditions. For recording the soil conditions in a well you can also use the form, "SOIL PROFILE", on 8.13/9.
REMARKS	Special events can be recorded here, especially damage to equipment, technical problems, conflicts with the community or owner, etc.

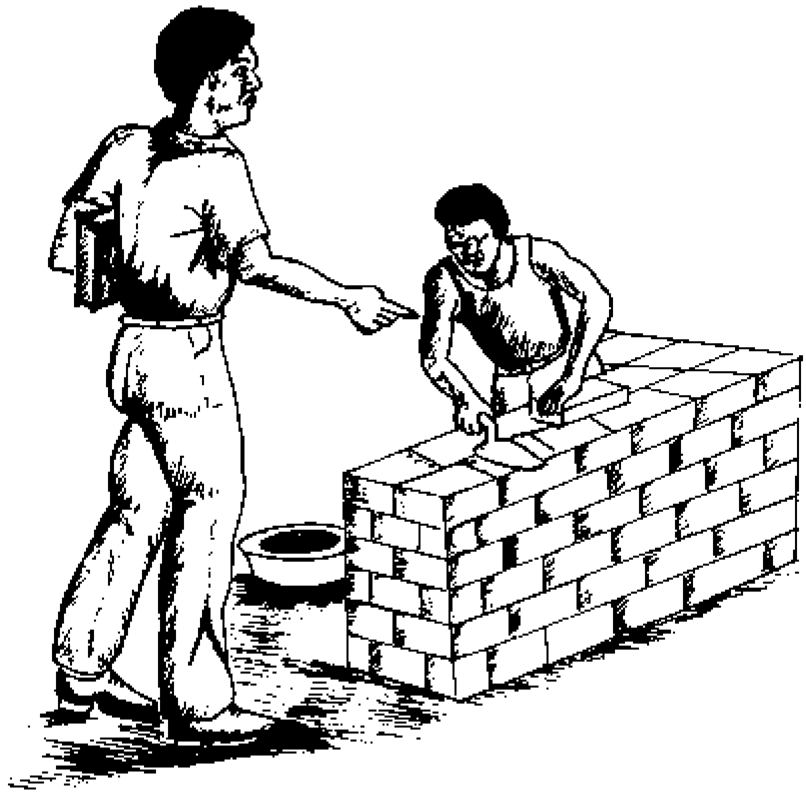

Sudan Council of Churches/Munuki Water and Sanitation Project

WORK RECORDS - WELL NO ...

Date	SCC Staff	Labourers Community	Work	Cement Buckets	Sand Buckets	Gravel Buckets	Mixture	Other Material		Water Table	Well Bottom	Soil	Remarks

Sudan Council of Churches/Munuki Water and Sanitation Project

WORK RECORDS - COMPOST LATRINE NO ...

Date	Staff	Work	Cement Buckets	Sand Buckets	Gravel Buckets	Mixture	Drums of Water	Other Materials	Remarks

7.3 Records of Materials

The materials needed for the construction of a well (or any other construction) should be summarized after completion of the work. This is the task of the foreman or technician responsible on site-Records of materials are not necessary for standard compost latrine construction, because the materials needed are always the same.

The following principles should be observed:

- Evaluate the daily work records, add up all materials consumed and fill in the sum on the "COST CALCULATION" form (see 7.3/2; 7.4/1).

- Start with the bulky items like cement (to be recorded by number of bags), reinforcement, sand and gravel (to be recorded in lorry loads or m^3).

- End the list with the smaller items like padlocks, handles, manhole covers, etc.

- Fill in whether the materials were contributed by the community or by the project (SCC).

- Do not forget local materials contributed by the community.

- After filling in, hand the form to the storekeeper. The storekeeper has to check to see if the recorded materials are in accordance with his/her records in the store. The storekeeper fills in the prices according to the stockcards. The price of small items with unknown value can be estimated.

- Afterwards, the records of materials are handed to the office for final check, final cost calculation and filing.

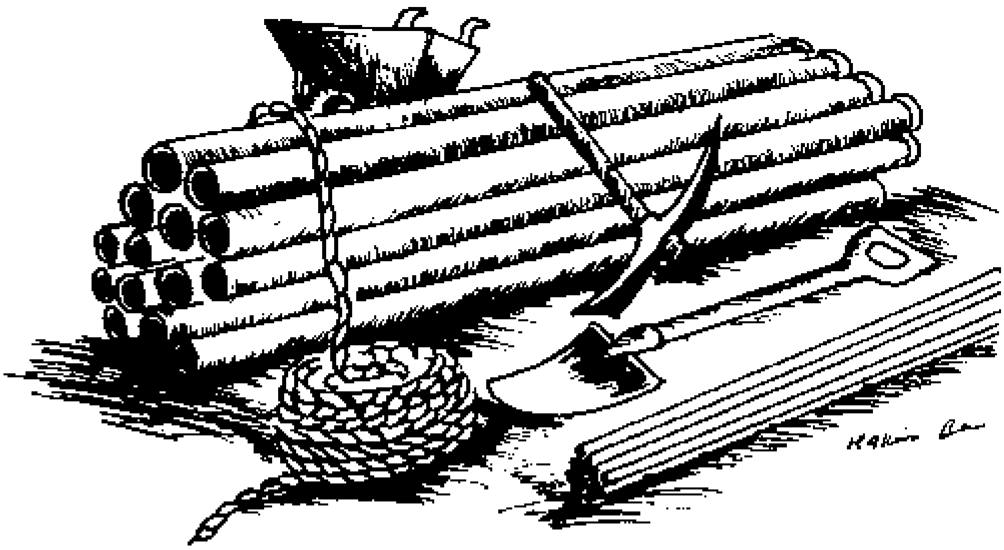

Sudan Council of Churches * Munuki Water and Sanitation Project

COST ESTIMATION/CALCULATION FOR ......

No.	Quantity	Unit	Item	Unit Price	Total	Contributed by

7.4 Cost Calculation for Community Work

Lk 14,28-30

After the completion of a construction work such as a well, compost latrine, etc., a final cost calculation needs to be made for assessment of the work done and for paying the bills.

A) Form for Cost Calculation

For any cost calculation the form, "COST ESTIMATION/CALCULATION", should be used. It should be filled in as follows:

COST ESTIMATION/ COST CALCULATION	The form can be used either for cost estimation before the work has started, or for cost calculation after the work has been completed. Underline, which purpose you will use the form for and cross out the other.	
FOR	Give the full information about the well/latrine with its number, location, owner or community.	
NO	Number the items 1,2,3,...	
QUANT	Record here the quantity, i.e. only the figures without the unit. If the item cannot be quantified, write "div." (= diverse).	
UNIT	Record here the unit. Possible units are:	
	bags	for cement
	m	for reinforcement, rope etc.
	pcs	for pipes
	kg	for nails
	gal	for fuel
	working days	for labour
	km	for transport
ITEM	Record here the items clearly and unmistakably. Write for example:	
	reinforcement ∅ 6 mm	instead of "reinforcement"
	metal pipe ∅ 2", 3 m	instead of "pipe"
	nylon rope ∅ 10 mm	instead of "rope"
	nails 2 $\frac{1}{2}$ "	instead of "nails"
	diesel, petrol	instead of "fuel"
	unskilled or skilled labour	instead of "labour"
	transport with Toyota pickup	instead of "transport"
UNIT PRICE	Record the price of one unit in £S; i.e., the price of one bag of cement, one kg of nails, one working day unskilled labour, one km driven by the Toyota pickup, etc	
TOTAL	Multiply the QUANTITY by the UNIT PRICE. This gives the TOTAL for the particular item.	
CONTRIBUTED BY	Record whether the item has been contributed (i.e. paid or provided) by the community or by the project (SCC), or by another agency, government office, etc.	

After filling in all the items, draw a line under the column “TOTAL” and add up all the TOTALs. The sum is the GRAND TOTAL, the whole amount spent on the work.

B) Steps of Cost Calculation

The cost calculation itself should be done according to the following steps (for example see 7.4/4-11):

1. Collect the “WORK RECORDS” from the foreman or technician in charge on the site.

2. Collect the “RECORDS OF MATERIALS” from the storekeeper.

3. Divide the expenses into:

   A) MATERIALS
   B) LABOUR
   C) TRANSPORT
   D) PLANNING AND SUPERVISION
   E) DEPRECIATION OF EQUIPMENT

4. Record first the material costs:

Write the heading “A) MATERIALS” on the form “COST CALCULATION” under “ITEMS”. Start by recording the materials below. Record local materials like sand, gravel, and poles. Include the price for transportation and loading if you have paid for “lorry load delivered at site”. If you have paid separately for transport and loading, record these costs under “TRANSPORT” and “LABOUR”. Record also materials which were not paid for but contributed freely. Estimate their costs and record who contributed them. If work was done in the workshop on some material, record it here also and estimate the costs, e.g. “welded adjustment on handpump body”. These costs belong to the material itself. Record all store materials like cement, reinforcement, etc. Do not forget small items. After recording all materials, add them up for a "TOTAL for MATERIALS".

5. Next, record the labour costs:

Write the heading “B) LABOUR COSTS” on the form under “ITEMS”. Count the number of working days from the WORK RECORDS. Record unskilled and skilled labour separately. The “UNIT PRICE” for daily paid labourers is their daily wage; for permanently employed staff it is their gross salary divided by 20 (Each staff works about 20 days per month if we take into consideration absences due to sickness, leave and holidays).

Record also unskilled labour provided by the community (to be counted from the WORK RECORDS), including the time spent for cooking for the staff, etc. Estimate the “UNIT PRICE” according to the market price for unskilled labour.

After recording all labour, add them up for a “TOTAL for LABOUR.”

6. Record the transport costs:

Write the heading “C) TRANSPORT” on the form under “ITEMS”. Check in the logbook to see how often the car went to the particular site and then add up the km. For example, record them as “350 km, Toyota pickup”. The “UNIT PRICE” for each km driven is to be found in the annual report of the previous year. In the annual report the total costs including depreciation, fuel, maintenance, insurance and driver of the vehicle are calculated and drawn down to each km; for example, the price per km for a Toyota pickup is presently £S 1.750 m/ms (1987). For calculation of the cost per km see 3.4. If a lorry was hired on a daily basis from Logistics Department, record the hiring costs per day; for example: “3 days lorry”, the “UNIT PRICE” being the hiring cost per day.

After recording all transport costs, add them up for a "TOTAL for TRANSPORT:[1]

7. Record the costs for planning and supervision:

Write the heading "D) PLANNING AND SUPERVISION" on the form under "ITEM". These costs cover the planning work in the office and the supervision on site. They can be either roughly estimated as a fixed sum (no "QUANTITY", "UNIT", "UNIT PRICE" given, just the "TOTAL"), or as a percentage of the total costs. Alternatively, the working days of the senior staff can be counted.

Add up all the costs for a "TOTAL for PLANNING AND SUPERVISION."

8. Record the costs for depreciation of the equipment:

Write the heading "E) DEPRECIATION OF EQUIPMENT" on the form under "ITEM". This will cover damages and losses of equipment, and the fact that all equipment needs to be replaced after a certain time. Normally these costs are estimated as a fixed sum and this is then recorded as the "TOTAL for DEPRECIATION OF EQUIPMENT."

9. Summarize all the expenses in the form, "SUMMARY OF COST CALCULATION FOR COMMUNITY WORK" (see 7.4/11).

Fill in the costs of material, labour, etc. Add up all the costs. The sum, called "TOTAL COSTS", is the real complete costs of the well/latrine which was built.

Calculate the percentage of the total spent on each heading, from A) to E).

Add up all the percentages. The sum must be 100%; otherwise, look for a mistake.

10. Add up all the contributions of the community/owner in your cost calculation and enter it into the summary. Add up all contributions of the project (SCC). However, if SCC has received cash payment, that means that part of the expenses of SCC has been replaced and that only the remainder is the real contribution of SCC. Therefore, the sum of all amounts contributed by SCC is the expenses of SCC. The cash paid to SCC should be deducted. The result is the contribution of SCC. Enter it into the form. Add up and fill in eventual contributions from others.

Now add up all the contributions. The sum must be equal to the TOTAL COSTS of step no.9, otherwise look for a mistake. Calculate, what percentage each contributor has given. Add up all percentages, the sum of which must be 100%; otherwise look for a mistake.

11. Present the summary to the PMT, the Finance Department, the Programmes Department and the owner or community, if necessary. These summaries are important for comparison purposes and for future decision-making.

12. If there are still payments outstanding, write a bill or payment request to the concerned party and hand it over attached to the cost calculation.

C) Example for Cost Calculation (simplified)

1. Task

Do a complete cost calculation for a well which was built by the neighborhood community Munuki and SCC Munuki. The well is located in Munuki West at the open space beside the planned cinema. The details of the work are recorded on the attached form "WORK RECORDS". The prices of the different commodities are as follows:

2. Prices of Commodities Provided by SCC

1 pc	concrete ring ∅ 1.07 m	£S 311.500 m/ms
1 pc	filter ring ∅ 1.07 m	£S 311.500 m/ms
1 pc	well cover ∅ 1.07 with manhole	£S 700.000 m/ms
1 bag	cement	£S 115.000 m/ms
1 working day	skilled labour	£S 10.000 m/ms
1 day	hiring of lorry	£S 200.000 m/ms
1 km	Toyota pick-up	£S 1.750 m/ms

3. Prices of Commodities Provided by the Community

1 m^3	sand	£S 35.000 m/ms
1 m^3	gravel	£S 65.000 m/ms
1 drum	water	£S 2.000 m/ms
1 bundle	bamboo	£S 15.000 m/ms
1 pc	pole	£S 15.000 m/ms
1 kg	nails 2”	£S 15.000 m/ms
1 pc	door for fence	£S 100.000 m/ms
1 pc	padlock	£S 15.000 m/ms
1 working day	unskilled labour	£S 5.000 m/ms
1 meal	breakfast for one person	£S 2.000 m/ms

4. Additional Information

Breakfast was provided for all SCC workers and community workers on all working days. According to the logbook, 60 km were driven by the Toyota pickup for transport of equipment and supervision. Planning and supervision costs £S 600.000 m/ms. The well siting before the construction of the well costs £S 100.000 m/ms. The depreciation of equipment (tripod, pump and tools) costs £S 1,000.000, m/ms.

5. Cross Section of the Completed Well

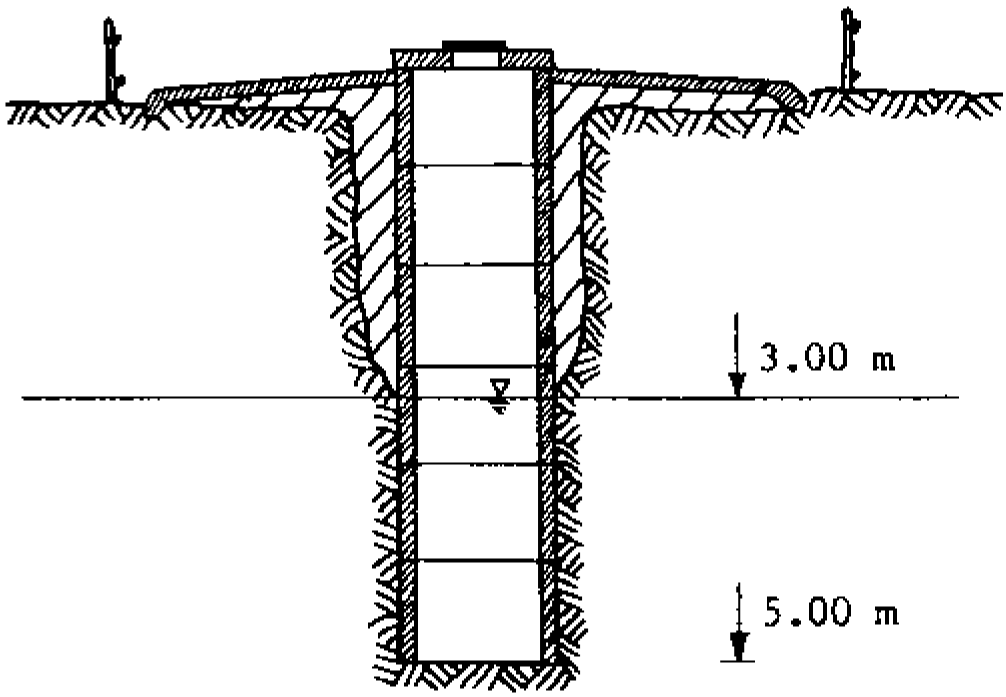

WORK RECORDS - WELL NO...*15*

Date	SCC Staff	Labourers Community	Work	Cement Buckets	Sand Buckets	Gravel Buckets	Mixture	Other Material		Water Table	Well Bottom	Soil	Remarks
30.1	-	*6*	*digging*	-	-	-	-	-		-	*1.80*	*clay*	-
31.1	-	*6*	*digging*	-	-	-	-	-		-	*3.00*	*clay*	-
2.2	*Jo/Si/Gl/P*	*4*	*transport of rings, cover, equipment*	-	-	-	-	-		*3.00*	*3.00*	*clay*	*lorry hired for 1 day*
3.2	*same*	*4*	*lowering ring + digging*	-	-	-	-	*1 filter ring* $\varnothing$*1.07*		*3.00*	*3.50*	*sandy clay*	
4.2	*same*	*4*	*same*	-	-	-	-	*same*		*3.00*	*4.00*	*same*	
5.2	*same*	*4*	*same*	-	-	-	-	*same*		*3.00*	*4.30*	*same*	*lot of water*
6.2	*same*	*4*	*digging*	-	-	-	-	-		*3.00*	*4.60*	*same*	*Honda pump used*
9.2	*same*	*4*	*digging and lowering one ring*	$\frac{1}{4}$	*1*	-	*1:4*	*1 fully concrete ring* $\varnothing$*1.07*		*3.00*	*5.00*	*same*	*same*
10.2	*same*	*4*	*lowering two rings*	$\frac{1}{2}$	*2*	-	*1:4*	*2 above*		*3.00*	*5.00*	*same*	
11.2	*same*	*4*	*backfill, cover placed platform*	*2 bags*	*18*	*24 b. +* $2m^3$	*1:3:4*	*1 cover 1 drum water*		*3.00*	*5.00*	*same*	
12.2	*same*	*4*	*platform and drainage*	*3 bags*	*27*	*36*	*1:3:4*	*1 drum water*		*3.00*	*5.00*	*same*	

Sudan Council of Churches * Munuki Water and Sanitation Project

WORK RECORDS - WELL NO...*15*

Date	SCC Staff	Labourers Community	Work	Cement Buckets	Sand Buckets	Gravel Buckets	Mixture	Other Material		Water Table	Well Bottom	Soil	Remarks
13.2	*Jo/Si/Gl/P*	-	*transport of all equipm. to workshop and curing*	-	-	-	-			*3 drums water*			*transport by Toyota pickup*
16.2	-	*3*	*build fence*	-	-	-	-			*18 poles* *1 door* *1 lock*			
17.2	-	*3*	*build fence*	-	-	-	-			*20 bdls bamboos* *4 kg nails 2 “*			
		Total	*6 bags*	*1.5 m^3*	*3 m^3*								

COST ESTIMATION/CALCULATION FOR WELL NO 15 Neighborhood Community Munuki West

No.	Quantity	Unit	Item	Unit Price	Total	Contributed by
			A) MATERIALS			
1	*6*		*concrete rings ∅ 1.07 m (3 filter, 3 fully)*	*311.500*	*1,869.000*	*scc*
2	*1*	*pc*	*cover with manhole*	*700.000*	*700.000*	*scc*
3	*6*	*bags*	*cement*	*115.000*	*690.000*	*scc*
4	*1.5*	*m^3*	*sand*	*35.000*	*52.500*	*comm.*
5	3	*m^3*	*gravel*	*65.000*	*195.000*	*comm.*
6	*5*	*drum*	*water*	*2.000*	*10.000*	*comm.*
7	*18*	*pcs*	*poles*	*15.000*	*270.000*	*comm.*
8	*20*	*bdls*	*bamboos*	*15.000*	*300.000*	*comm.*
9	*4*	*kg*	*nails*	*15.000*	*60.000*	*comm.*
10	*1*	*pc*	*door for fence*	*100.000*	*100.000*	*comm.*
11	*1*	*pc*	*padlock*	*15.000*	*15.000*	*comm.*
			TOTAL OF A) MATERIALS		*4,261.500*	
			B) LABOUR			
1	*40*	*days*	*skilled labour*	*10.000*	*400.000*	*scc*
2	*54*	*days*	*unskilled labour*	*5.000*	*270.000*	*comm.*
3	*94*	*pcs*	*breakfast*	*2.000*	*188.000*	*comm.*
			TOTAL OF B) LABOUR		*858.000*	
			C) TRANSPORT			
1	*1*	*day*	*big lorry*	*200.000*	*200.000*	*scc*
2	*60*	*km*	*Toyota Pickup*	*1.750*	*105.000*	*scc*
			TOTAL OF C) TRANSPORT		*305.000*	
			D) PLANNING AND SUPERVISION			
1			*planning and supervision*	*600.000*	*600.000*	*scc*
2			*well siting*	*100.000*	*100.000*	*scc*
			TOTAL OF D) PLANNING AND SUPERVISION		*700.000*	
			E) DEPRECIATION			
1			*depreciation of equipment*	*1,000.000*	*1,000.000*	*scc*
			TOTAL OF E) DEPRECIATION		*1,000.000*	

Contributions:

Contributions of SCC	Contributions of Community
1,869.000	*52.500*
700.000	*195.000*
690.000	*10.000*
400.000	*270.000*
200.000	*300.000*
105.000	*60.000*
600.000	*100.000*
100.000	*15.000*
1,000.000	*270.000*
	188.000
5,664.000	*1,460.500*
5,664.000	*1,460.500*

Sudan Council of Churches * Munuki Water and Sanitation Project

SUMMARY OF COST CALCULATION FOR COMMUNITY WORK

Well/Latrine No.:	*15*
Community/Owner:	*Neighborhood Community Munuki West*
Site:	*Munuki West, open space beside planned cinema*

1. Costs Differentiated According to Type

A) Materials	£S	*4,261.500*	*= 60 %*
B) Labour	£S	*858.000*	*= 12 %*
C) Transport	£S	*305.000*	*= 4 %*
D) Planning and Supervision	£S	*700.000*	*= 10 %*
E) Depreciation of Equipment	£S	*1,000.000*	*= 14 %*
Total Costs	£S	*7,124.500*	= 100%

2. Costs Differentiated According to Contribution

A)	Contribution of Community/Owner			
	= Expenses of Community/Owner + Cash paid to SCC	=		
	= £S *1,460.500* + £S *500.000*	= £S	1,960.500	= 28 *%*
B)	Contribution of SCC			
	= Expenses of SCC - Cash paid to SCC	=		
	= £S *5,664.000* - £S *500.000*	= £S	*5,164.000*	*= 72%*
C)	Contribution of	£S	....	= ... %
D)	Contribution of	£S	....	= ... %
	Total Costs	£S	*7,124.500*	= 100%

7.5 Cost Calculation for Contract Work

Cost Calculation for contract work is basically done in the same way as the cost calculation for work on a community basis. However, there is no need for differentiation according to the contributors, as all work is done by the contractor and the owner's contribution is the payment.

Follow these steps for calculation:

1. to 8. see 7.4, B)

9. Summarize all the expenses on the form "SUMMARY OF COST CALCULATION FOR CONTRACT WORK". Fill in the costs for materials, labour, etc. Add up all the costs. The sum is the total of the expenses which were spent by the SCC as a contractor. Calculate what percentage of the total was spent on each heading, A) to E). Add up all the percentages. The sum must be 100%, otherwise look for a mistake.

10. Compare the expenses of SCC with the payments of the owner to SCC. Find out about the payments from administration. If the expenses are higher than the payment, SCC has worked at a loss. Fill in the difference under "LOSS". Supplementary payments may be requested from the owner. If the expenses are less than the payments, SCC has worked with profit. Fill in the difference under "GAIN". If the payment and the expenses are equal, there is no loss or gain.

Cost estimations for future contracted work are done in the same way. However, the amounts need to be roughly estimated. If the cost estimation was done on a realistic basis and no items were forgotten, the total should be very close to the final cost calculation.

Sudan Council of Churches * Munuki Water and Sanitation Project

SUMMARY OF COST CALCULATION FOR CONTRACT WORK

Well/Latrine No.:	....
Owner:	....
Site:	....

Expenses of SCC

A)	Materials	£S	....	=	... %
B)	Labour	£S	....	=	... %
C)	Transport	£S	....	=	... %
D)	Planning and Supervision	£S	....	=	... %
E)	Depreciation of Equipment	£S	....	=	... %
	Total Expenses	£S	....	=	100%

Expenses of SCC	£S ....
Payment of Owner to SCC	£S ....
LOSS (or subsidy) of SCC	£S ....
GAIN (or profit) of SCC	£S ....

7.6 Purchasing Locally

To keep to a certain procedure of purchasing items from the local market will help to save time and efforts and money and to prevent losses.

Follow these steps:

1. Write a complete, quantified and exact purchase list and discuss it with colleagues and the storekeeper who may add something-It is very annoying to have to repeat the whole purchasing procedure when a single item has been forgotten.

The list needs to be sorted; that is, items to be purchased from the same shop should be listed together (e.g., tools together, stationary together, etc.).

Fill in all the items on the following list:

No.	Quant.	Unit	Item	Unit Price				Total
				Shop1	Shop 2	Shop 3	Shop 4	

Alternatively, the "COST CALCULATION" form can also be used for the purchase list (see 7.3/2).

2. Collect pro forma invoices for the items in the desired quantity. If the item is expensive, collect invoices for the same item from several shops, if possible. Fill in the given prices on the list.

3. Choose the cheapest source or the best quality, underline it on the list and calculate the totals using that figure. Add up the totals.

4. Write a payment request for the total amount, get it approved by the chairperson of the PMT and present it to the accounts office with the pro forma invoices attached.

5. Collect the money. Sign for receiving it (for your own protection). Keep the money in a safe place; for example, in a closed bag. Do not mix it with private money.

Alternatively, you can collect money from the petty cash of the project if you need only a small amount. Take care that the amount, the date and your name are recorded.

6. Purchase the items in the respective shops. Check the quality (e.g., tools operating?, bags not torn?, parts not broken?, timber straight?) Do not accept the item if it is not of good quality. Check the quantity. Count all pieces by yourself. Ask for appropriate packing. Load everything carefully.

7. Pay for the items against an invoice (= receipt). Check to see that the amount is the same as on the pro forma invoice. Carefully count the change. Record any payment immediately on a prepared sheet of paper; that is, as soon as you leave the shop. It is very easy otherwise to forget a payment and to get confused. If you cannot get a receipt (e.g. at an open market), write a receipt yourself in the receipt book and let the shopkeeper sign, if necessary with a finger print. If you have no receipt book at hand and the amount is small, record it and the receipt can be written in the office.

Calculate the balance. The balance must be equal with the money left with you. Thus you can check the money at any time.

Money received:		£S 300.000 m/ms
Shop	Payment	Balance
First shop	25.000	275.000
Second shop	107.000	168.000
....		

8. Put all the receipts immediately together into a separate envelope (not just into your pocket).

9. Transport all the items to the store and hand them over to the storekeeper.

The items need to be recorded on the stock cards including the prices. It is important to record the prices at this point, because the receipts are going to be handed to the accounts office.

10. In the end of every purchasing day, count the money left with you and compare it with the balance according to your records. If it does not fit, look for a mistake.

11. If receipts are written in Arabic, write the quantity, item and amount on the receipt in English.

12. When you have finished purchasing and have spent all, or almost all, of the money, number all the receipts 1,2,3, etc. Write on each receipt the budget No. under which the receipt shall be recorded. Summarize the receipts on a separate sheet of paper as follows:

Cheque No: 47812
Date: 3.2.87
Amount: £S 300.000 m/ms

No	Date	Receipt No.	Budget No	Item	Amount	Balance
1	5.2.	1	4.2	hammer	25.000	275.000
2	6.2.	2	3.2	stationary	107.000	168.000
3	...					

For the budget numbers see 2.9/1.

13. Collect all the receipts and an eventual balance and hand it over to the administration, so that they can register it in the finance book and hand it over to the accounts office.

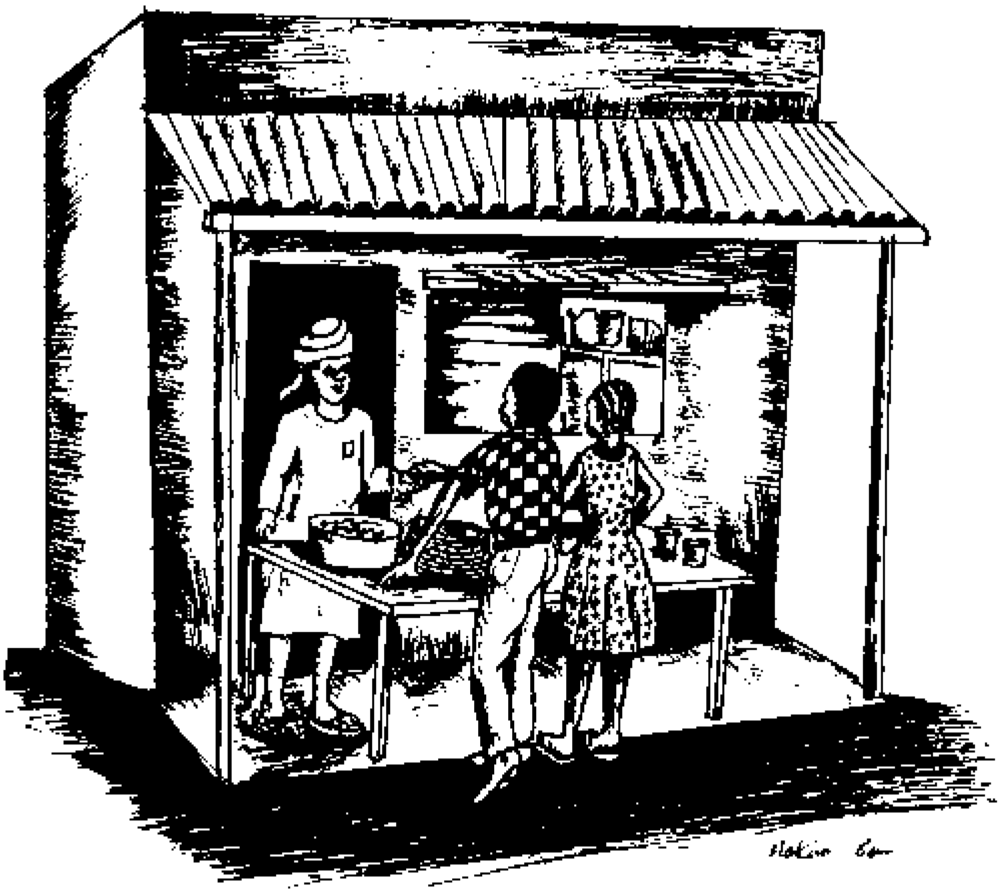

7.7 Purchasing from Khartoum

Purchases inside Sudan, especially from the capital, can be arranged through the Logistics Department of SCC.

The procedure is as follows:

1. Write a complete, quantified and exact purchase list. Each item needs to be described unmistakably. Mention the quantity, the unit, the item itself, the material, the measurements (like 0, length, etc.). If necessary, add pictures or refer to a catalogue. Discuss and decide upon the purchase list with your colleagues and the storekeeper.

No.	Quantity	Unit	Item	Remarks

Let this purchase list be typed in three copies. Check afterwards thoroughly for spelling and typing errors.

2. Write a letter to the Logistics Department in Khartoum, requesting them to purchase and send the items according to the attached purchase list. Send the original to Khartoum, Logistics Department, and a copy to the Finance Department with a note that they should kindly make the money available.

The third copy remains with the project and is to be filed in the respective paper file (e.g., “tools”, “pump”) or in the paper file “RUNNING ORDERS”.

3. Fill in the order on the chart “RUNNING ORDERS” hanging in the office. This helps to follow up outstanding orders.

4. From time to time, inquire about the order by radio message ot letter.

5. When receiving the items, compare the waybill and the purchase list and the items actually received. If everything is correct, sign the waybill. Note missing or damaged items on the waybill (all copies).

6. Put all the items into the store and hand them over to the storekeeper. The items need to be recorded on the stock cards.

7. If there is any difference between the purchase list and the items received, write a new list headed “ITEMS RECEIVED”.

8. Send the list “ITEMS RECEIVED” and an accompanying letter to Logistics, acknowledging receipt of the items and thanking them. Ask for the invoices and transport costs.

9. Alternatively, inquire from the Finance Department about payments made.

10. After receiving the information about payments, tell the administration to record them into the finance book.

11. Divide the transport costs accordingly on each item.

Example:

No	Quant	Unit	Item	Unit Price Khartoum	Total Khartoum	Unit Price Juba
1	20	pcs	zinc sheets 8’	60.000	1,200.000	86.400
2	5	gal	oil paint, green	55.000	275.000	79.200
3	30	pcs	buckets	15.000	450.000	21.600
			PURCHASE COSTS		1,925.000	
			Transport by air Khartoum -Juba		800.000	
			Loading/unloading		40.000	
			TOTAL COSTS		2,765.000	

The TOTAL COSTS are the PURCHASE COSTS plus all other costs of transport, handling, loading, etc.

The TRANSPORT FACTOR is used to include all additional costs, thereby finding the real cost of each item.

$$\text{TRANSPORT FACTOR} = \frac{\text{TOTAL COSTS}}{\text{PURCHASE COSTS}} = \frac{\text{£S } 2{,}765.000}{\text{£S } 1{,}925.000} = 1.44;$$

Multiply each “Unit Price Khartoum” by the TRANSPORT FACTOR. The result is the “Unit Price Juba” which includes all transport and other additional costs.

Note, that the price including transport, etc., is considerably different from the purchase price.

12. Record the “Unit Price Juba” on the stock cards.

7.8 Purchasing from Abroad

Some items are not available within the country and, therefore, need to be purchased from abroad. Purchases from abroad differ considerably from purchases within the country, because foreign currency payments and customs clearance are necessary.

Some items from abroad can be purchased by the Logistics Department. In this case the procedure is similar to “Purchases from Khartoum”. However, the purchasing of special technical items, like specific tools, pumps, hand augering equipment, etc., require special technical knowledge and information about the project’s needs. Therefore, these orders need to be handled by the project staff themselves in cooperation with the Logistics Department.

The procedure is basically as follows, but it may vary on different occasions:

1. Write a complete, quantified and exact purchase list and discuss it with colleagues and the storekeeper.

2. Write a letter to the supplier(s) requesting a pro forma invoice. Describe the items you want exactly. If possible, request pro forma invoices from several suppliers.

3. Upon receival of the pro forma invoices, check them and select the most suitable.

4. Discuss in the PMT and check with the administration whether the money is available in the budget. If necessary, get approval from the Deputy General Secretary or the Finance Director.

5. Write a letter to the supplier ordering the items according to his or her pro forma invoice. Indicate how the items should be packed and transported to your end (by air, by ship, etc.), by which route and by which transport company, if known.

Send copies of this letter to the Deputy General Secretary, Finance Director, Logistics Department in Khartoum/Juba, and to the transport company. One copy remains in the project and is filed in the respective paper file (according to subjects, with a separate file for each type of equipment).

6. Write an accompanying letter to Logistics Department in Khartoum requesting them to obtain an import license for this order.

7. Fill in the order on the chart “RUNNING ORDERS”, hanging in the office.

8. From time to time, inquire about the order by telex or letter.

9. After notice that the items have arrived, ask Logistics Department for assistance in customs clearance.

10. Check the items and compare them with the waybill, with the order, and with the pro forma invoice. If everything is correct, sign on the waybill. Note items missing or damaged on the waybill (all copies).

11. Assemble all machinery, like generators, pumps, etc., and test their operation. If they are not operating properly, write to the supplier.

12. Put all the items into the store and hand them over to the storekeeper. The items need to be recorded on the stock cards.

13. If there is any difference between the order and the items received, notify the supplier in written form <u>immediately</u>.

14. After receiving the bill, compare it with the pro forma invoice. Check to see that transport costs are reasonable. Send a copy of the bill with a request for payment to the Finance Department for settling.

15. Enter payment into the finance book of the project. If in foreign currency, calculate in £S at the official exchange rate.

16. Divide the transport and packing costs accordingly on each item and transform the amount into £S. Conside <u>all</u> transport costs as well as any handling costs that may have been charged.

Example:

No.	Quant	Unit	Item	Unit Price Supplier US $	Total of Supplier US $	Unit Price Juba US $	Unit Price Juba £S
1	2	pcs	diaphragm pump	700	1,400	1,330	4,655
2	4	pcs	hose, 10 m, ∅ 2 $\frac{1}{2}$ "	160	640	304	1,064
3	10	pcs	spare membrane	40	400	76	266
		PURCHASE COSTS			<u>2,440</u>		
		Packing			350		
		Air Transport EUR - NBI			1,250		
		Road Transport NBI-Juba			400		
		Handling by Transport Company/Loading/Unload.			200		
		TOTAL COSTS			<u>4,640</u>		

The "TOTAL COSTS" are the "PURCHASE COSTS" plus all other costs for transport, handling, etc.

The TRANSPORT FACTOR is used to include all additional costs, thereby finding out the real cost of each item.

$$\text{TRANSPORT FACTOR} = \frac{\text{TOTAL COSTS}}{\text{PURCHASE COSTS}} = \frac{4{,}640}{2{,}440} = 1.9;$$

17. Multiply each "UNIT PRICE SUPPLIER" by the TRANSPORT FACTOR.

The result is the "UNIT PRCIE JUBA, US $", which includes packing, transport, handling, etc.

Inquire about the official exchange rate between US $ and £S and transform the "UNIT PRICE JUBA, US $" into the "UNIT PRICE JUBA, £S".

Example:

If US $ 1.00 = £S 3.500, then multiply all unit prices in US $ by 3.5. The result is the unit price in £S.

Note that the price including transport, etc., is considerably different from the purchase price. Knowing the real price is important for future budgeting and eventual sales.

18. Record the real prices (the "UNIT PRICE JUBA, £S") on the stock cards.

19. Write a letter to the supplier, acknowledging receipt of the order and thanking him or her.

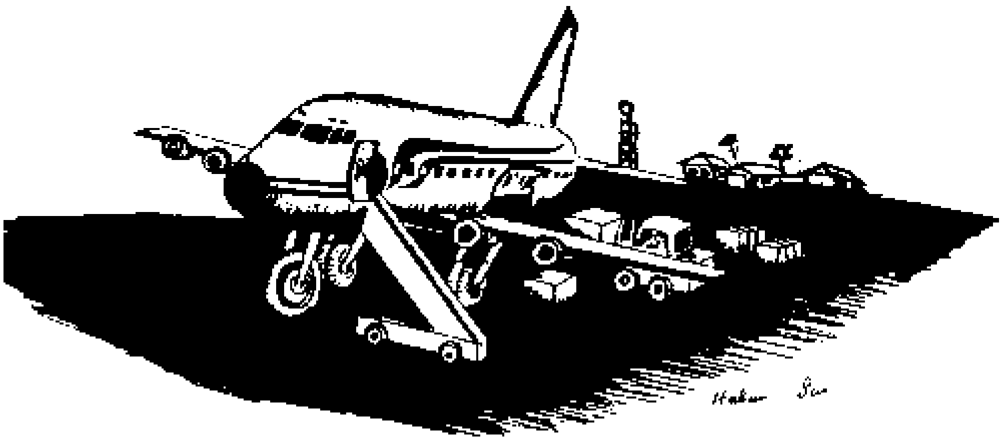

7.9 Storekeeping - Recording

Correct records are essential for storekeeping. They are done on stock cards, which are to be filled in as follows (example see 7.9/3)

ITEM

Write a separate stock card for each kind and size of item. Therefore, separate cards for 'nails 2"', "nails 3"', etc. Write under "ITEM" the exact specification. Start with the general name, followed by the material, followed by the size. For example:

pipe, metal, ∅ 2"	not metal pipe
bits for wood	not wood bits

Put spare parts under the main item. For example:

hacksaw blades	not blades, hacksaw
diaphragm pump, spares	not spares for diaphragm pump

Use always the same and only one name for one kind of item. For example:

measuring tape, 2 m	not tape measure 2 m
measuring tape, 5 m	not tape measure 5 m
measuring tape, 10 m	not measuring tape 10 m
measuring tape, 50 m	not meter 50 m

Complete tool boxes are one item like handpump box, building box, well-digging box, etc. Write the name of the box under "ITEM" with the remark "Contents on a separate list". This list is to be kept with the stock card. A copy of the list of contents remains in the box itself for on-site checks.

ALPHABETICAL ORDER	The stock cards are stored in a box in alphabetical order. They are sorted according to the first word under "ITEM", then the second, and so on. Identical items differentiated only by size are sorted according to the size with the smallest first. Therefore, the following cards will be in this order: jerrycan, metal, 4 gallons jerrycan, plastic, 1 gallon jerrycan, plastic, 4 gallons or: timber, hardwood, 2 x 2", 3 m timber, hardwood, 2 x 4", 3 m timber, hardwood, 3 x 4", 3 m timber, softwood, 2 x 2", 3 m timber, softwood, 2 x 2", 6 m The stocktaking list of the previous year is attached to the box of the stock cards and can help you find the relevant cards.
UNIT	Indicate in which unit the item will be counted. For example: kg – nails pcs – hammer, welded mesh, timber, pipes m – rope, reinforcement bag – cement, whitewash set – drill bits, spanners of different sizes lit – oil gal – engine oil, fuel, paint rolls – binding wire The figures in the stock card below are always counted in the units mentioned above.
UNIT PRICE	Record the unit price in £S. If the same item is purchased later at a higher price, cancel the old price and replace it with the new one.
ON	Record the date when the price was valid.
NUMBER RECEIVED	Record the quantity received here. Fill a new line each time you receive or issue an item.
NUMBER ISSUED	Record the quantity issued here. When tools are put into any of the tool boxes, they count as "issued".
BALANCE	Add the number received to the balance of the line above and fill in the result on the same line under "BALANCE". Subtract the number issued from the balance of the line above and fill in the result on the same line under "BALANCE". The "BALANCE" must equal the actual quantity in the store.
TO/FROM	Record to whom the item was issued (e.g. well No.4, latrine No.5, office, handpump box, name of person). Record from whom you received the item (e.g. market Juba, Khartoum, Nairobi, building department).
DATE	Record the date of receiving or issuing.
REMARKS	Note any irregularity like "items spoilt", etc.
SIGNATURE	The storekeeper needs to sign here. Thus it is clear, who is responsible for issuing or receiving this particular item.

It is important to record all movements immediately. If that is not possible, due to lack of time, never allow any item to leave the store without a notice on a piece of paper, which is to be recorded later as soon as possible.

Sudan Council of Churches * Munuki Water and Sanitation Project

STOCK CARD

ITEM____ UNIT____ UNIT PRICE £S____ ON____

Number Received	Number Issued	Balance	To/From	Date	Remarks	Signature

Sudan Council of Churches * Munuki Water and Sanitation Project

STOCK CARD

ITEM *CEMENT* UNIT *bag* UNIT PRICE £S *115.000* ON *1.7.87*

Number Received	Number Issued	Balance	To/From	Date	Remarks	Signature
600		*600*	*Nbi*	*1.7.*	*12 broken*	
	25	*575*	*CL No.17*	*3.7.*		
	7	*568*	*CL No.21*	*7.7.*		
	10	*558*	*WS*	*9.7.*	*for rings in workshop*	
	5	*553*	- -	*11.7*	*spoilt by rain*	
50		*603*	*SCCBuild*	*15.7.*	*returned loan of 1.3.87*	

7.10 Organising a Store

A well-kept store contributes to correct storing and the easy finding of items. It keeps us aware of the amount of material in stock and helps to prevent losses. A good store is the foundation of any project work and a mirror of the quality of work.

A) Principles of Storekeeping

Good storekeeping is based on the following principles:

1. The systematic structure according to which the items are stored must be easily understandable for anyone at first glance. Thus, anyone using the store is much more likely to place the items in the correct location without messing up.

2. Every item should be easily accessible without moving other items or climbing over them. Thus, people are less likely to place items anyhow, maybe just in front of the door, or to move items without putting them back in their right places. This also saves time and efforts.

3. The store should be clean, dry and orderly. It is much more likely that people mess up a dirty place than a clean one.

4. Spoiling of items must be prevented and spoilt items need to be removed in order not to occupy needed space.

B) Rules of Storekeeping

For implementing these principles, observe the following basic rules:

1. Store identical items at the same place.

For example, do not store timber of the same size in different places.

2. Store related items near to each other.

For example, store timber of different sizes or nails of different sizes near to each other. Store different kinds of tools near to each other, and separate them from building materials, etc.

3. Always store the same items in the same place.

Write the name and/or draw a picture of the item on the shelf, wall, etc. Write the contents on boxes or packed material. Do that even if it seems obvious, since you might forget later. Especially, write difficult names on the shelves (like D-shackle, with drawing).

5. Always store lengthy boxes or other items with the short side facing the outside of the shelf. Thus you can see the side of many boxes instead of few. Store the boxes with the label of their contents facing the outside.

6. Store boxes, timber, etc., of the same kind above each other instead of beside each other with other items on top.

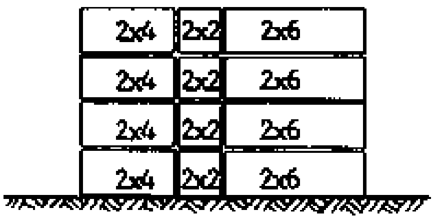

CORRECT

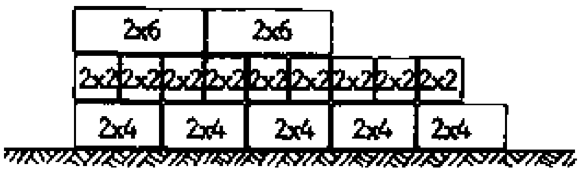

WRONG

Thus, each size/type is easily accessible without moving others.

7. Store items so that they are easily countable. For example, store cement, etc., in piles of 5 or ten above each other and 5 or ten piles beside each other. Always remove from one pile until it is finished, then from the next.

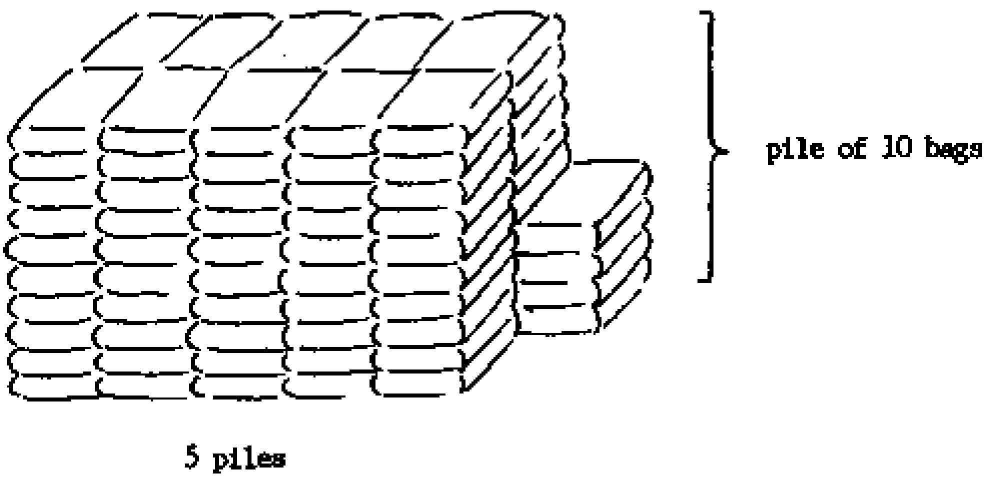

easy to count: 104 bags

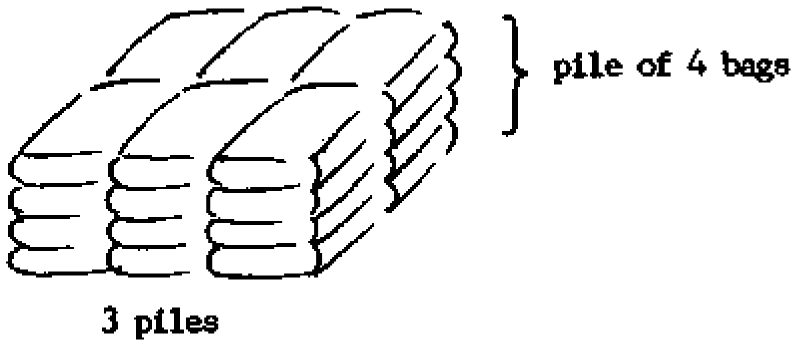

difficult to count: 24 bags

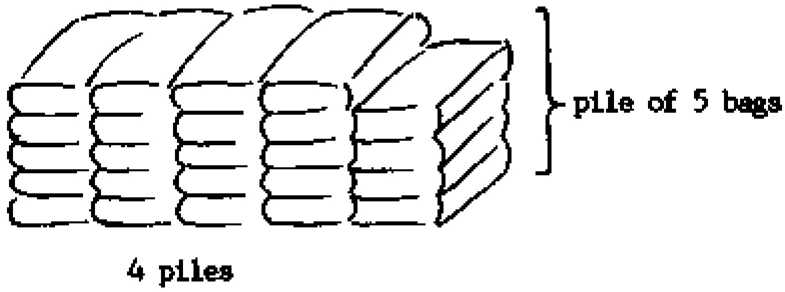

easy to count: 24 bags

Store nails in 1-kg boxes. Thus it is easier to determine how many are left, as compared with, say, a single container containing 20 kg of nails.

8. Store as few items as possible on the floor. Provide sufficient shelf space. Hang whatever possible on the wall or on the shelves. More can be stored on shelves than spread on the ground.

That way, moving about in the store and cleaning will be made easier.

9. Put small items like nails, bolts, pins, etc., into labelled boxes.

10. Store rope and wire on a roll or hanging in rolls on a lever arm, or store rope in a box. Thus any length can be easily cut off.

11. Store items in a stable way. Always store heavy items on the lower shelves. Turned-over shelves or collapsed piles are a nuisance and are dangerous.

12. Take care that the store is airy, has ventilation openings and is dry. Immediately repair any leaks in the roof or from below.

13. Store cut timber on a straight ground on at least three logs, never directly on the ground.

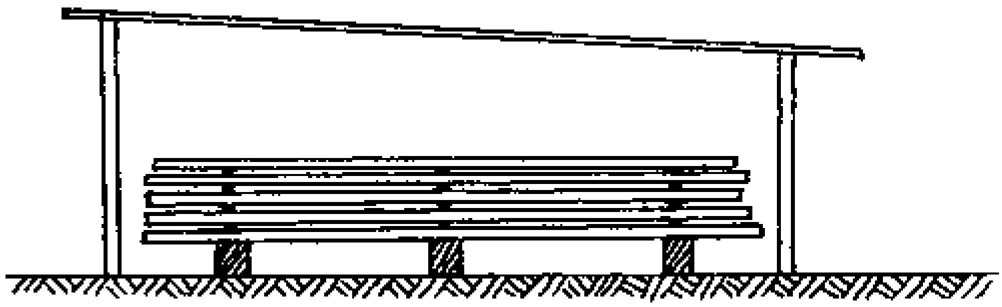

Optimal way of storing timber: each log is surrounded by air.

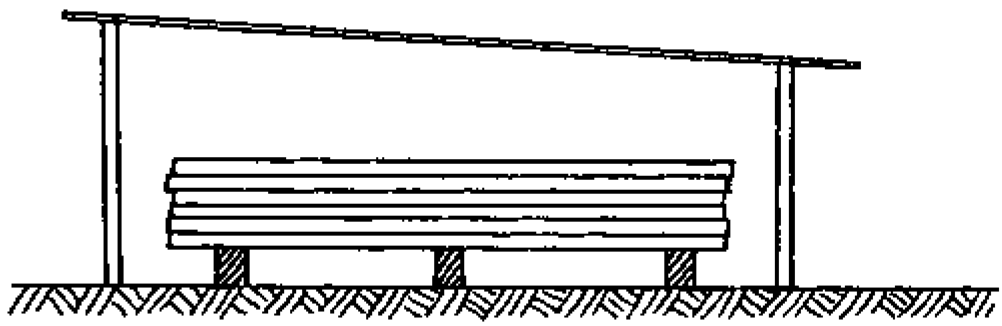

Possible way of storing timber: the air cannot reach all pieces.

Wrong way of storing timber: it gets wet, dirty and twisted, and ants can attack it easily.

14. Never store cement and fuel together. They will spoil each other.

15. Inflammable materials must be stored separately from other combu stible materials in an area especially protected from fire.

16. Materials, such as cement, which deteriorate with the passage of time, must be kept constantly moving by using the earliest arrivals first.

17. Clean the store regularly. Clean all returned items before putting them back into their place.

18. Keep the store carefully locked, even if you leave it only for a short time.

C) Equipment of a Store

- shelves,
- boxes,
- table,
- chair,
- stock cards in a box,
- file “LOANS”,
- file “SALES”,
- forms “WORK PLAN”,
- forms “WORK RECORDS LATRINE”,
- forms “WORK RECORDS WELL”,
- forms “TOOLS ON SITE”,
- forms “COST ESTIMATION/CALCULATION”,
- calculator,
- ruler,
- pens,
- pencils,
- marker pens,
- punch,
- stapler,
- string,
- glue,
- cellotape,
- lined paper,
- plain paper,
- carbon paper,
- jar 1 litre,
- jar 1 gallon,
- stocktaking list,
- balance scales,
- one copy of these chapters about storekeeping.

D) Example of Store Layout Plan

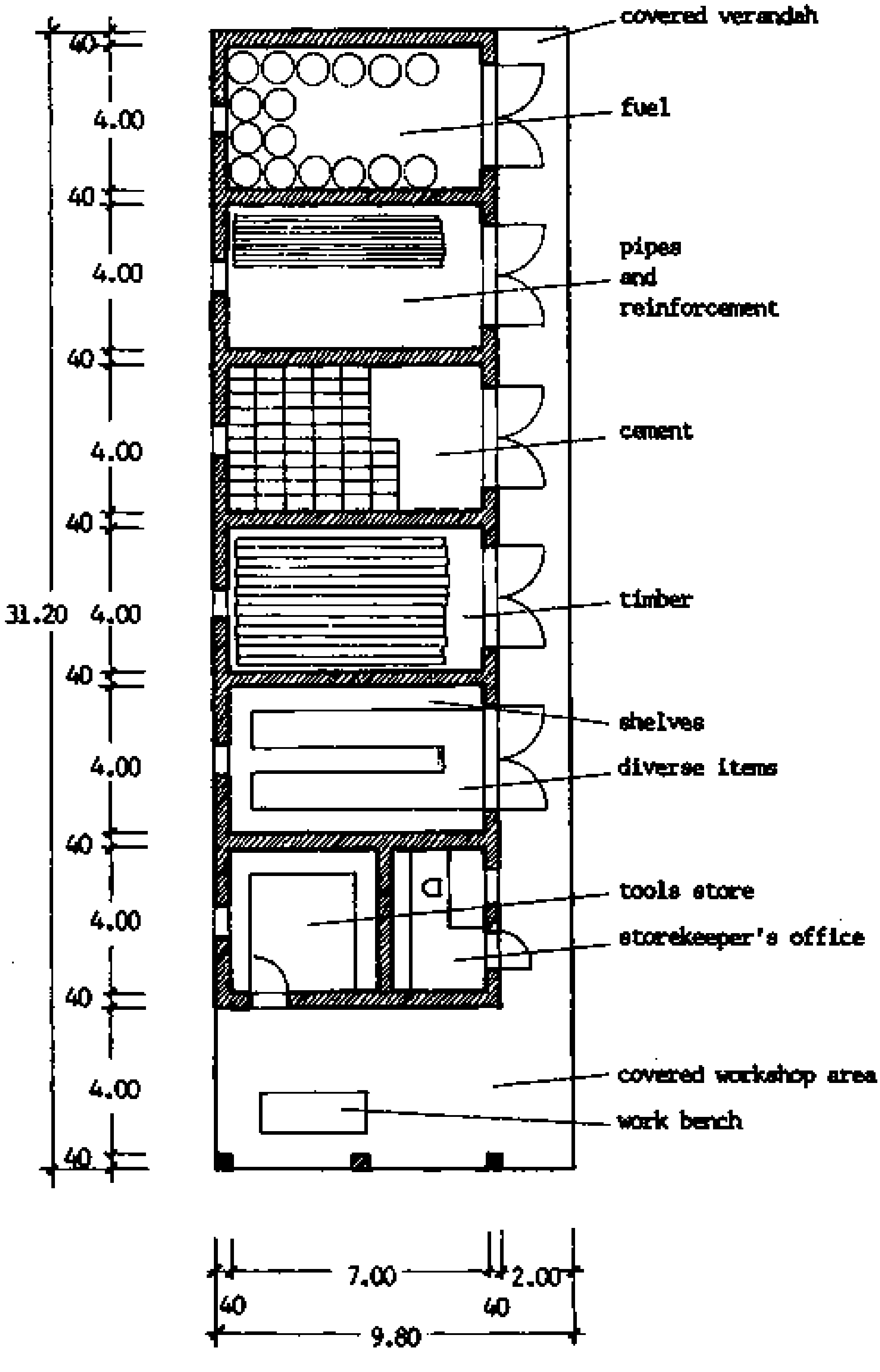

Scale 1:200

7.11 Storekeeping - Procedures

The task of the storekeeper is to implement the basic storekeeping procedures.

A) Issuing Tools for a Site (see 7.11/4)

Record tools to be issued to a site: first on the stock card, secondly on the form, “TOOLS ON SITE”, which is to be filled out in two copies. Give one copy to the foreman/technician responsible for the site; she/he has to account for any losses while on site. Let her/him sign for the tools issued. The other copy remains in the store for the storekeeper to check the tools as they are returned. Record complete boxes with their names (i.e., hand pump box, building box, etc.), without listing each tool.

B) Issuing Materials for a Site (see 7.11/5; also 7.3/1f; 7.4/1,7ff)

Record materials to be issued to a site: first on the stock card, secondly on the form, “COST ESTIMATION/CALCULATION”, which is to be filled out in two copies. Give one copy to the foreman/technician responsible for the site. The other copy remains in the store. This is needed for the final cost calculation.

Record materials for standard compost latrine construction, which are always the same amount, only on the stock card.

C) Receiving Items

Check tools coming back from a site according to the form, “TOOLS ON SITE”, and enter the receipt into the stock card. Check to see if the tools are in good condition.

Check items from the market according to the purchase list and enter them into the stock card, including the prices.

Check items arriving from outside according to the waybill. Note missing or damaged items on the waybill and sign all copies of the waybill. Enter the items into the stock card. Request the prices from the office and enter them into the stock card as well.

D) Sale of Items

Issue items on sale, like latrine slabs, ventpipes, children’s squatting slabs, etc., only when the buyer brings a receipt from the accounts office with a note from the senior staff. Record the item in the stock card and fill in under “REMARKS”: “paid, receipt No...., date of receipt”. Write on the receipt “Issued” with the date and your signature and give the receipt back to the buyer. File the note into the paper file “SALES”.

E) Loans of Items

Items (equipment or tools) can be loaned only in exceptional cases. Issue the item only upon a written approval from senior staff and file the approval in the paper file, “LOANS”. Enter the loan into the stock card.

Write a list of all outstanding loans at the end of each year and present it to the office for follow-up.

F) Purchase List

Note down any items which have been depleted, soon will be depleted, or are missing, on a purchase list. Present these suggestions for re-purchasing to the concerned staff at the time of purchasing.

G) Cost Calculations

When the work on a well or latrine is finished, the foreman or technician on site completes the records of materials on the form “COST ESTIMATION/CALCULATION”, including the materials contributed by the community. She/he hands the list to the storekeeper. The storekeeper adds the prices according to the stock cards and hands the list to the office (for a detailed description, see under 7.3 and 7.4).

H) Prevention of Loss and Misuse

A project store is a great asset but can create danger of loss and misuse. Additionally, the question of misuse can cause founded or unfounded accusations, mistrust, and disturbance in staff cooperation. The following suggestions may help to minimize such disturbances and to prevent or reduce losses and misuse.

1. Suggestions for Senior Staff

- Normally, store keys should be handled by only one person. However, this might cause a lot of inconveniences in the daily running of a project (especially for a small project with no specially assigned storekeeper). The assignment of two people holding store keys is only possible, if there is trust between them and if they keep strictly to recording each item issued and received immediately. Otherwise, insist that only one person be responsible for the store keys.

- In the case of very valuable items stored, provide the store with two padlocks and let two different people hold the keys. Thus the store can be only used during the presence of both.

- Assign one person to be responsible for tools on site or for a specific store, etc., and let her/him sign when taking over. This strengthens the feeling of responsibility among staff.

- If staff members want to take items home (e.g. tools for use, scraps), insist that they keep to the procedures, i.e. ask permission which should be granted whenever reasonable and possible. If not, explain why. The staff should feel that they are treated reasonably and justly.

- Pay a reasonable salary to storekeeper and technicians. Project properties are a great and unfair temptation to underpaid staff with hungry children at home.

- In case of losses, make an inquiry. Do not blame anyone unless guilt is clearly proved. In that case, take whatever steps are necessary. Otherwise, improve your supervision and spend more time on regular checks. In case of proof misuse, dismissal is the only possible action.

2. Suggestions for the Storekeeper

- Keep to the storekeeping procedures, especially, insist on authorizing documents when issuing items.

- Keep the store in order. This helps to keep an overview.

- Label the shelves. Draw pictures of each tool on the wall on the place where you hang it. Thus you realize immediately when it is missing.

- Store items like nails in packed quantities.

- Store items in an easily countable way. Thus you can check the number easily any time.

- Keep your records in order and up-to-date.

- In case of any suspicion against you, insist on the presence of a second person when handling the store.

Sudan Council of Churches * Munuki Water and Sanitation Project

TOOLS ON SITE

Well/Latrine No .... Community/Owner: .... Site: ....

Quantity	Unit	Item	Date Issued	Signature Storekeeper	Signature Foreman		Date Returned	Remarks

Sudan Council of Churches * Munuki Water and Sanitation Project

COST ESTIMATION/CALCULATION FOR ....

No.	Quantity	Unit	Item	Unit Price	Total	Contributed by

7.12 Stock-Taking

The annual stock-taking is essential in order to determine the assets of the project and to check if anything is lost. The stock-taking report is part of the annual report of the project. The stock-taking is done at the end of the year and is connected with general cleaning of the store and maintenance of equipment.

Stock-taking and cleaning of a big store takes time. Plan on taking several days with sufficient staff. Follow these steps:

1. Collect all tools and equipment from outside sites.

2. Clean the whole store and put it in good order.

3. Go through all the stock cards. Count the quantity of all items available in the store and compare it with the last balance in the stock card. Tick it if they correspond. If items are missing, consider whether they may be on outside sites or on loan to somebody. If anything else is missing and somebody is responsible for the loss, she or he should be made to pay for it. Record unaccountable losses or losses due to normal spoiling as follows:

Put the quantity missing under “ISSUED” and write “lost” or “spoilt” under “REMARKS”.

4. Write the stock-taking list. Preferably this should be done in a quiet place with a desk.

The stocktaking list looks like this:

<u>Stock-taking List</u>

Year: ....
Project: ....
Store: ....

Quant	Unit	Item	Unit Price	Total	Total Depreciated

Fill in for each stock card one line.

Fill in under “QUANTITIY” the number of the last “BALANCE” on the stock card. Fill in “UNIT”, “ITEM”, and “UNIT PRICE” according to the stock card.

Multiply “QUANTITY” with the “UNIT PRICE” and fill in the result under “TOTAL”.

Calculate the “TOTAL DEPRECIATED” for each item.

Do not depreciate material, equipment and tools, which have <u>not</u> been used, but just stored in stock. For these items the “TOTAL” and “TOTAL DEPRECIATED” are equal.

Depreciate all equipment and tools which were used as shown in the following example:

Year	Depreciation	To get the “TOTAL DEPRECIATED” multiply the “TOTAL” by the factor
1.	25% from original price	x 0.75
2.	50% from original price	x 0.50
3.	75% from original price	x 0.25
4.	100% from original price	The “TOTAL DEPRECIATED” = 0

The first year is the year following the purchase.

Example:

Pipe moulds purchased in 1985

Year		Quant	Unit	Item	Unit Price	Total	Total Depreciated
1985		3	pcs	pipe moulds	4,000	12,000	12,000
1986		3	pcs	pipe moulds	4,000	12,000	9,000
1987		3	pcs	pipe moulds	4,000	12,000	6,000
1988		3	pcs	pipe moulds	4,000	12,000	3,000
1989		3	pcs	pipe moulds	4,000	12,000	

Fully depreciated items are recorded in the stock-taking list (they are still around and may still be used), but the “TOTAL DEPRECIATED” (= the depreciated value) is recorded as nil.

After filling in all items on the stock-taking list, add up all “TOTAL DEPRECIATED”. The result will be the “GRAND TOTAL”.

The work of filling in the stock-taking list can be drastically reduced if a photocopy of last year’s stock-taking list is used and the changes are filled in. Afterwards the new stock-taking list can be typed.

5. Hand the stock-taking list to Administration. There, vehicles and office assets will be added. The final stock-taking list is attached to the annual report (see 2.6/3).

8. Water Supply

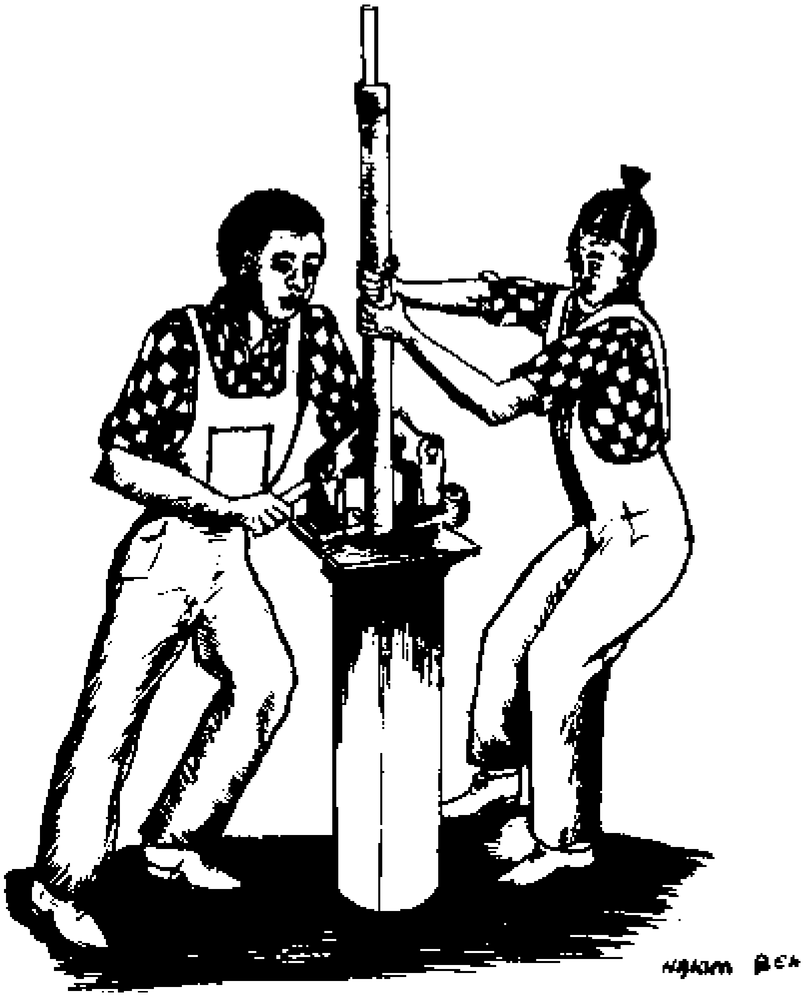

8.1 Story about Good Water Supply

Jam 3,11

The following chapters mainly tackle the technical aspects of water supply. However, the technical aspects are only one element of a successful, good water supply. The social and educational aspects are at least as important, but not the main topic of these chapters. A story about good water supply is recorded her as an example which can be used in the educational work with the community.

THE FOOLISHNESS OF MAN

God had created everything: the cattle, the goats, the dura, the fire, and the water. So one day he called the creatures: lion, hyena, bird, hippo, and man. God told them to ask for one of the things he had created. The lion choose the cattle. The hyena wanted the goats. The bird asked for the dura. And the hippo took the fire. Then man was left with only water and he complained: “I wanted the cattle!” But God told him to take the water, that it was a good gift.

So, the lion went away with his cattle and ate one of them. Then he rested. When he woke up, he was very thirsty. When he came to the water, the man said: “Go away. The water belongs to me." "But I am very thirsty. I will give you a cow." "That is not enough, "said the man. So the lion gave man all the cattle, and man let the lion drink.

...and the same thing happened with the hyena, the bird, and the hippo...

And so man had everything: the cattle, the goats, the dura, the fire, and the water. But sometimes the lion or the hyena or the bird or the hippo would sneak up and steal one of these things from man because they had nothing.

One day God looked down at this man who had the water and the cattle and the goats and the dura and the fire. And he saw that man drank water from the river and that he bathed in the same place and that the cattle came into the water to drink. And other people used the river as a place for urinating. And God was unhappy. He looked again at man. Man was crying with indigestion, diarrhea with blood and bilharzia every day. So God called the fox. "Go! Talk to the foolish man. I have given him all the water and he does not know how to keep it safe. Man cannot drink the water where man and cattle bathe. Man cannot bathe in water which is a place for urine and stool. Man will have to find the hidden water I have given him."

So fox went to man. "Oh, foolish man! You have spoiled this big gift of water and now you have many sicknesses. Do you want these sicknesses always?" "Oh, fox! How can these things truly go away?" And fox told man to dig a hole for the hidden water and to put a cover on the top to keep dirt and germs from getting in. Then the fox told man to buy a pump to draw the water out so that no unclean bucket would touch the water.

And man did as fox suggested. And man had healthy water and the diseases stopped. And man was happy again. And God looked down and shook his head and said: "What kind of foolish man!"

8.2 Connection of Water Supply with the Community

Gen 26,12-21; Ex 17,1-7; Num 20,1-13; Dtn 6,11; Js 41,17-20; Jer 14,3 Ez 29,3; Jn 4,5-30

Water supply is not a private, but a community facility. Therefore, the whole community needs to be involved in

1. Decision taking (about price, location, construction, caretaking),
2. Construction,
3. Correct handling,
4. Control of use,
5. Maintenance and repair.

The community is not in need of <u>any</u> water point, but of a water point,

1. considering social connections, to be used by any citizen irrespective of religion, tribe and race,

2. at a suitable location,

3. under control of the proper people,

4. with water in sufficient quantity (the aquifer not being completely exhausted),

5. with water of good quality,

6. easy to operate, especially for children,

7. easy to maintain,

8. with the appropriate infrastructure (spare parts available, etc.).

See also 8.29/1f.

8.3 Process of Community Development - Water Supply Cooperation

Water supply measures without community involvement are a common practice in many places, however, community involvement has invaluable advantages, although difficult, tiresome and slow. Therefore, community involvement should always be pursued.

A community development process with several meetings needs to take place before and during the start of the technical work.

Ideally, the community contributes whatever it is able to contribute depending on the situation, such as:

- unskilled labour,
- local materials,
- feeding of project staff on site,
- cash,
- participation in the operating instruction,
- selection of caretakers for operation and maintenance.

The project contributes whatever the community is not able to provide, such as:

- know-how,
- skilled labour,
- equipment,
- materials from outside,
- transportation,
- supervision,
- operating instruction,
- training for the caretakers.

The form on 2.5/6f is an example of an agreement between a project and a community about the construction of a well.

See also 8.29/1f.

8.4 Cooperation of Water Supply Technicians with the Community

Dtn 6,11b

For successful cooperation between the technical staff and the community, the technicians have to act in certain ways and keep to certain working principles.

The following attitudes need to be observed:

1. Community cooperation is voluntary. If the community wants to achieve its aim, i.e. a well, they need to bring their contribution. If not, no well is going to be built. It is up to them. The project staff should not try to persuade the community or to put pressure on them.

2. The project staff needs to act with great respect towards the members of the community and their capabilities.

3. The project staff needs to be clear and consistent in its relationship with the community.

The following working principles need to be kept:

1. Inform the community ahead of time about your coming.

2. Keep tools, equipment, files, behind when you arrive until people are ready to accept them. At first, they might be frightening.

3. Always greet everybody upon your arrival.

4. Behave in a polite manner, quietly and patiently, with respect.

5. Assemble all people of the community and project before starting work on a new site. This is the time for greetings, explaining the work, discussing questions, and prayer.

6. Talk in an understandable language. Avoid difficult, especially technical expressions. Make sure that everything is translated.

7. Consider women equally.

8. Avoid embarassing illiterates by handing them written documents. If necessary, ask for somebody from the community who knows to read (normally the secretary of the well committee).

9. Accept anything offered to you with kindness (chairs, drink, food). You may ask, but do not request.

10. If you bring your own clean drinking water, do not boast with its cleanliness and do not belittle the water of the village. Share your water, if asked.

11. Do not implement any water supply work if the community did not meet its contribution.

12. For necessary communication approach the members of the committee rather than individuals.

13. Give priority to solve relationship problems and social conflicts during the process of work.

14. Do not let yourself get involved in inner organisational problems of the community.

15. Call for a community meeting in case of any community related problems instead of trying to solve them on your own.

8.5 Importance of Adequate Water Supply

Human beings need water

directly for (in order of their priorities)

1. Drinking,
2. Cooking,
3. Taking bath,
4. Washing kitchen utensils and cleaning,
5. Washing laundry;

indirectly for

6. Cultivating their food (rainwater or irrigation),

7. Watering their animals and thus producing food,
8. Fishing,
9. Building,
10. Generating electrical power,
11. Exstinguishing fire,
12. Running machines,
13. Recreation,
14. Cooling,
15. Flushing latrines,
16. Industries and others.

Water is needed (in order of their priority)

1. in sufficent quantity,
2. in good quality.

Inadequate quantity of water affects the health of people by

1. not enough water to drink	→ dehydration,
2. not enough water to cook, therefore not enough food	→ malnutrition,
3. not enough water for cleaning kitchen utensils	→ transmission of diseases,
4. not enough water for taking bath	→ development of skin and eye diseases,
5. not enough water for the laundry	→ skin diseases,
6. not enough water for cultivation	→ malnutrition,
7. not enough water for animals	→ malnutrition.

Bad quality of water affects the health of people by

- transmitting water related diseases.

See also 8.29/1f.

8.6 Water Related Diseases

Most diseases in Sudan are due to one of the following reasons:

1. Lack of sufficient water,
2. Lack of clean water,
3. Lack of sufficient sanitation,
4. Lack of preventive health care (immunizations etc.),
5. Lack of curative health care (personnel, facilities, etc.),
6. Relying on (traditional) medicine without consulting medical personnel,
7. Unbalanced diet,
8. Poverty,
9. Distribution of land,
10. Difficult life conditions in parts of the country,
11. Great number of household members,
12. Certain values and beliefs.

A great number of the diseases are related to inadequate water supply. They can be differentiated according to five groups:

Name	Description	Diseases	Help
water borne diseases	carried by water, infecting consumers	cholera dysentery typhoid hepatitis amoeba giardia diarrhea polio	provide clean (safe) water
parasitic diseases	organisms causing the disease spend part of their life cycle in an aquatic host	guinea worm bilharzia filariasis	provide clean (safe) water
filth born diseases = diseases of dirt	caused by insufficient water for washing and hygiene	scabies tropical ulcer trachoma eye infections	provide sufficient quantities of water
water associated diseases	spread by insects breeding in water	malaria river blindness sleeping sickness yellow fever	remove pools, flooded la- trines and other breeding places
diseases by polluted water	caused by drinking chemically polluted water	cancer kidney trouble mottling teeth skeletal fluorisis	prevent chemical pollution of water

WATER RELATED DISEASES

Sickness	Other Names	Cause	Vector	Transmission	Preventive Measures	
					before sickness	during sickness
Cholera		toxin, released in gut by bacteria	people, flies	contaminated water and food, incl. ice and cold drinks, uncovered faeces	good hygiene, latrines, safe water	isolation, good hygiene, safe water, disinfect or burn the clothes and blankets, boil plates and cups, disinfection of stools
(bacterial) Dysentry	shigella, shigellosis	bacteria (several different ones)	people, flies	contaminated water or food	good hygiene, safe water, clean and well prepared food, latrines	isolation, separate plates and cups
Typhoid	enteric fever	bacteria	people, flies	contaminated water and food, faeces to mouth	good hygiene, safe water, latrines	isolation, disinfection of stools, wash hands after latrine

Sickness	Other Names	Cause	Vector	Transmission	Preventive Measures	
					before sickness	during sickness
Hepatitis A Hepatitis B		virus	people, flies, monkeys	A: faeces to mouth B: blood - using needles of other people	good hygiene, safe water, latrines, sterilized medical equipment	isolation, separate plates and cups, extremely good hygiene
Polio	poliomyelitis	virus	people, flies	contaminated food or water, close contact	good hygiene, safe water, vaccination, latrines	isolation, good hygiene, safe water
Amoeba	amoebiasis, amoebic dysentry	parasite	people, flies	contaminated food or water, poor sanitation	good hygiene, safe water, latrines, keep flies off food	wash hands after de-faecation and before meals
Giardia	giardiasis	parasite	people, flies	see under dysentry	see under dysentry	see under dysentry, papaya seeds protect
Diarrhea	gastroenteritis	bacteria	people, flies	see under dysentry	see under dysentry	see under dysentry
Guinea worm	dracunculiasis	parasite	cyclops in standing water (well or pond)	infected person stands in water or muddy place, warm lays larvae into the water, people drink contaminated water	safe water supply, drainage of standing water	cleanliness, roll worn slowly on small stick (may take a week, do not break the worm), do not go into water
Bilharzia	schistosomiasis - Mansoni - Haematobium	parasite	snail (releases parasite into water)	swimming or walking in infected water (parasite penetrates the skin)	avoid swimming, walking, bathing in infected water, e.g. the Nile, control snails, latrines	urinate and defaecate only in latrines
Scabies	7-year itch	parasite	scabies mite	close skin contact with infected person	avoid contact with infected person, good hygiene	wash all clothes and furniture with hot water and soap
Tropical Ulcer		bacteria		filth, friction, trauma	good hygiene, safe water	daily cleaning of the ulcer

Sickness	Other Names	Cause	Vector	Transmission	Preventive Measures	
					before sickness	during sickness
Trachoma	chronic conjunctivitis	bacteria	people, flies	by flies or touch by contaminated fingers	good hygiene, safe water, early treatment	wash left and right eye separately
Eye infections	conjunctivitis	bacteria	people, flies	see trachoma	see trachoma	see trachoma
Malaria		parasite (plasmodium)	mosquitoes	mosquito bites	mosquito net, screening, shut doors and windows in the evening, cut grass short fill in pools	early treatment to prevent anaemia
River blindness	onchoceriasis	parasite	black fly	fly bites	control of black fly	control of black fly
Sleeping sickness	trypanosomiasis	parasite	tse-tse fly	fly bites	protecting clothes, clear bush	
Yellow fever	jungle fever	virus	mosquitoes	mosquitoes living in areas with monkeys	vaccinations, drain breeding places	isolation, mosquito net
Filariasis	- Wuckeria Bancrofti - Loa Loa	worms	- people to mosquito - people to fly	mosquito and fly bites	clearing bush and grass, drain water	mosquito net, insect repellants
Cancer		chemicals in water, and others		drinking polluted water	drink chemically clean water	early treatment
Kidney troubles	kidney stones	water with too much salts		drinking polluted water	drink water with low salt content	drink plenty of water
Mottling of teeth Skeletal fluorosis		fluorides in drinking water		drinking polluted water	defluoridation of water supply	early treatment

compiled by Inga Andersson

8.7 Basic Facts about Water

Ez 34, 18-19

A) Distribution of Water

No.	Location	Name	Volume (approx.)	Percentage
1	Water in vegetation, animals, human beings	water in biosphere	1,000 km^3	0.00007 %
2	Water in the air (clouds, rain)	water vapour	14,000 km^3	0.001 %
3	Water in lakes, ponds, rivers, swamps	surface water	135,000 km^3	0.01 %
4	Water in the soil underground	groundwater	8,400,000 km^3	0.6 %
5	Ice caps, glaciers, snow	frozen water	29,350,000 km^3	2.1 %
6	(salty) water in seas and oceans	seawater in oceans	1,362,100,000 km^3	97.3 %
	TOTAL		1,400,000,000 km^3	100.00 %

Water in the air, in the biosphere, frozen water and seawater are not readily available for water supply. Therefore, water supply for humans mainly relies on groundwater and surface water. Surface water is not available in all locations, whereas groundwater is available in many locations and is the main source of water supply.

Distribution of Groundwater

75 % less than 50 m deep
25 % deeper than 50 m

Hand dug wells are ususally constructed up to 50 m depth (depending on the conditions). That means that the majority of groundwater is within the scope of hand dug wells.

See also 8.11.

B) Properties of Water

Some properties of water are listed in the following:

- It consists of hydrogen and oxygen; the chemical formula is H_2O.

- It is transparent.

- It is colourless (with a blue tinge in large bodies).

- It has no taste.

- It exists in three physical stages:

  * solid = ice
  * liquid = water
  * gas = vapour

- The ratio between the weight of water and the weight of (dry) air is 830:1; therefore, water falls in air.

- The ratio between the weight of vapour and the weight of (dry) air is 1:133; therefore, vapour moves upwards in air.

- The freezing point of water is 0°C.

- The maximum density of water is at 4°C.

- The boiling point of water is at 100°C (changing with atmosphere pressure).

- The ratio between the weight of ice and the weight of water is 1:11; therefore, ice floats on water.

- Water is practically incompressible.

- It has capillarity, that is the ability to move upwards in small diameter openings because of cohesion (= the ability to stick together) and adhesion (= the ability to stick to a surface).

- It is an universal solvent; therefore, natural water contains gases and mineral salts in solution.

C) Movement of Water

1. Hydrological Cycle

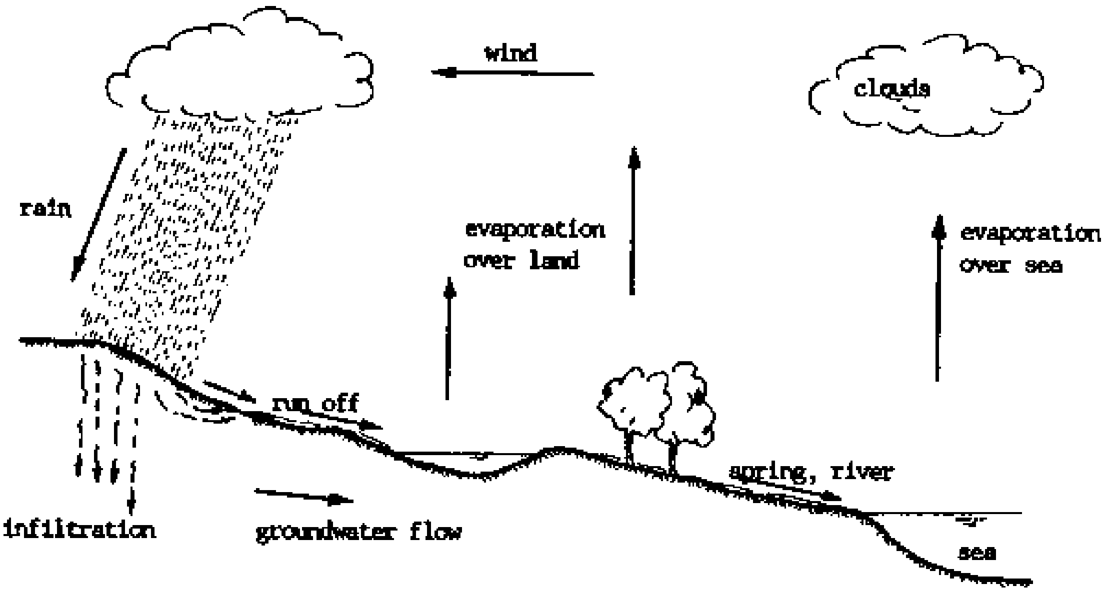

2. Transportation of Water from the Sea into the Continent

Water

- evaporates over the sea,
- travels by cloud several 100 miles,
- rains on forest,
- evaporates from forest,
- builds new clouds,
- travels to next forest several 100 miles away.

That means that water travels in “jumps”. Therefore, forests are essential for the transportation of water into the continent.

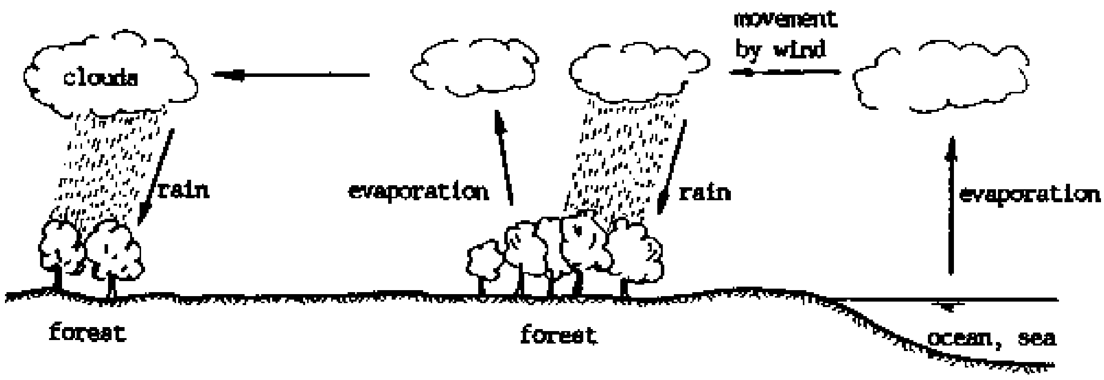

D) Dangers for Water

Our groundwater is a most valuable resource essential for life. It is in danger in many ways:

1. Water Is in Danger of Bacteriological Pollution

Flooded latrines, latrines too close to wells, leaking septic tanks, overflow seepage wells of septic tanks, and defaecation in the open pollute the water with disease transmitting bacteria and viruses. Bacteriological pollution can be cleaned through filtering and disappears by itself with time passing (see also 9.8).

Therefore:

- Do not construct latrines which will be flooded!
- Do not construct latrines near to wells!

2. Water Is in Danger of Chemical Pollution

Flooded latrines increase the nitrate and nitrite concentration in the water (nitrate and nitrite are produced in the decomposition process and are then dissolved in the water).

Poisons like DDT, artificial fertilizers and pesticides, spilled engine oil, diesel or petrol, acids, etc. pollute the water chemically. It is very difficult, mostly impossible, to remove chemical pollution from water (see also 3.11/2; 9.13/2f; 9.16/2; 9.22).

Therefore:

- Avoid the use of poisons like DDT, pesticides, etc.!
- Be careful not to spill engine oil, diesel, petrol, etc.!
- Never pour old engine oil on the ground!

3. Water Is in Danger by Removing Vegetation

Rainwater falling on barren soil will run off quickly and will have no time to infiltrate into the ground and, therefore, to add to the ground-water. (Beside that, winds will carry away the top soil which is fertile.) Soil with vegetation retains the rainwater and allows it to infiltrate into the soil(see also 8.9).

Therefore:

- Do not burn the grass on the fields! If burning is absolutely necessary, do it just immediately before planting the new crops and make sure that the area is limited.

- Do not overcultivate and do not allow overgrazing!

4. Water Is Endangered by Cutting Trees

Trees transport water from the groundwater through their roots up to the leaves. They form clouds through their evaporation. Therefore, forests are essential for creating rain.

People cut trees for clearing fields (and building houses without planting young trees. Tree seeds and young trees are killed by agricultural fires. People contribute to the reduction of rains by neglecting the trees.

Therefore:

- Plant young trees and protect them!
- Cut only as many trees as absolutely necessary! For each tree cut, plant three young ones!
- Do not burn grass!

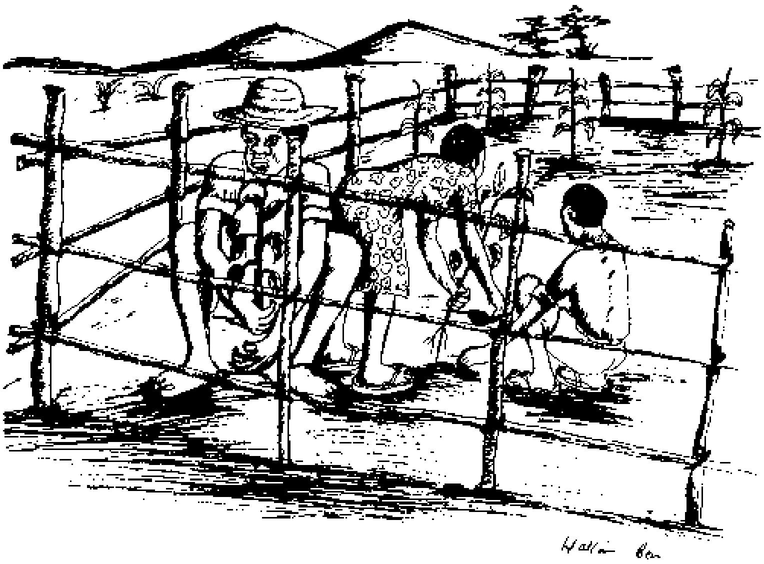

8.8 Groundwater

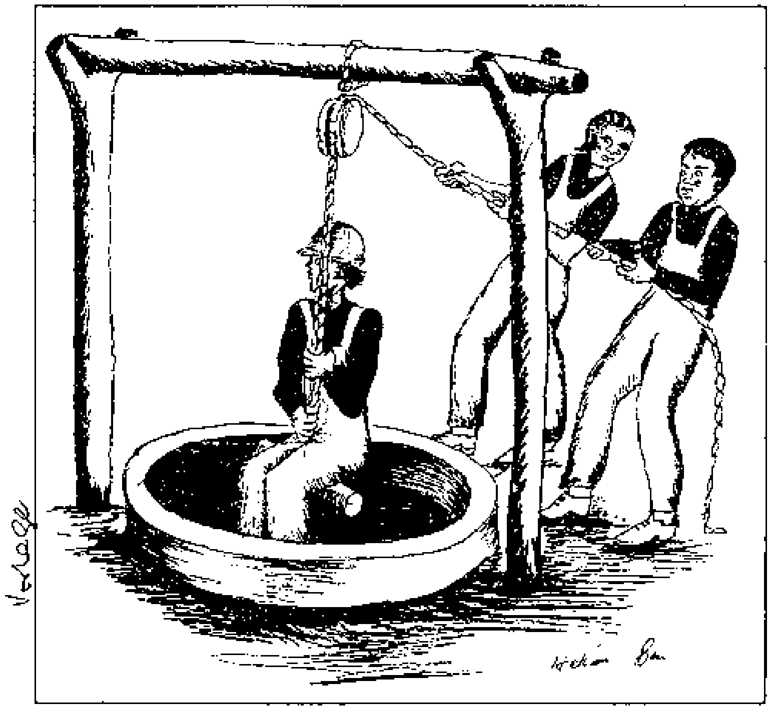

A) Water Storage

The ground soil normally contains air in its pores and is able to store water instead of air in the pores. The water content can be differentiated as follows (see also 8.8/4):

The Soil Is	The Soil Contains	Name	Suitable for Well Intake
dry	air, but no water	soil layer without water	no
wet	air and water	capillary zone or unsaturated zone	no
saturated	water, but no air	aquifer or saturated zone	suitable

B) Properties of Ground Soil

The soil has the following properties regarding water:

- It stores huge amounts of water.
- It prevents evaporation of the water.
- It preserves the quality of water.
- It cleans the water from bacteriological pollution.
- It enriches the water with minerals, etc.
- It makes the water available for trees, wells, springs, etc.
- It balances changes in the climate (dry season - rainy season, droughts).
- It allows vertical transportation (= infiltration).
- It allows horizontal transportation ("underground streams", horizontal seepage).
- It releases water to wells, springs, etc.
- It preserves the water temperature.
- It can make water dirty if the soil is polluted by poisons, old engine oil, fuels, etc.

C) Properties of Aquifers

Two main properties are essential for aquifers (= water bearing layers):

1. porosity = measure for the ability to store water
2. permeability = property of permitting the through-flow of water

Soil	Porosity	Permeability $m^3/day \times m^2$
clay	54 to 557.	0.00005 to 0.1
sand	35 to 407.	5 to 150
gravel	30 to 407.	50 to 750
sandstone	10 to 207.	0.005 to 2.5

D) Types of Aquifers

Often there are different soil layers above each other. They can constitute the following types of aquifers:

1. (Open) Aquifer (= unconfined aquifer = open groundwater)

An aquifer is a saturated porous soil layer containing and transporting water. There can be several aquifers above each other, divided by impermeable layers.

An impermeable layer contains no or little water and does not allow water to infiltrate through it. However, impermeable layers are seldom continuous, therefore, water can pass through the incontinuities.

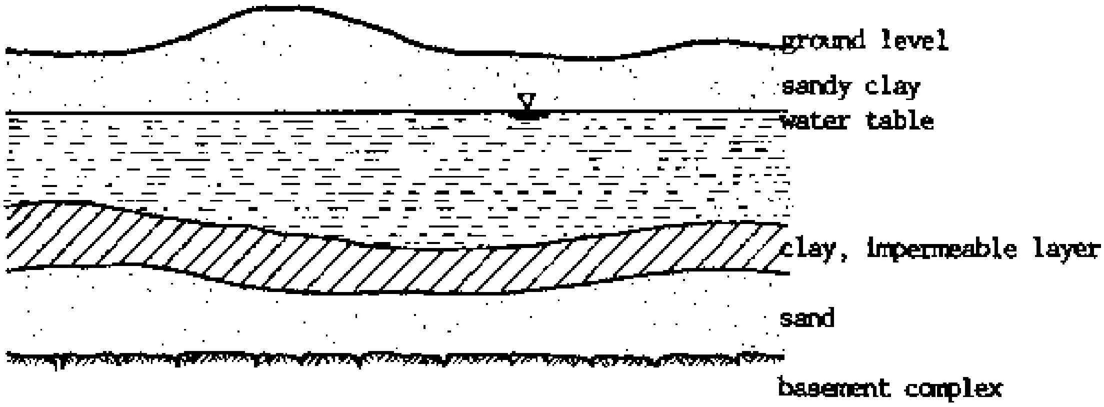

2. <u>Artesian Aquifer (= confined aquifer)</u>

An artesian aquifer is confined by an impermeable layer. If tapped by a well, the water table raises in the well up to the "piezometric surface". See also 8.35/3.

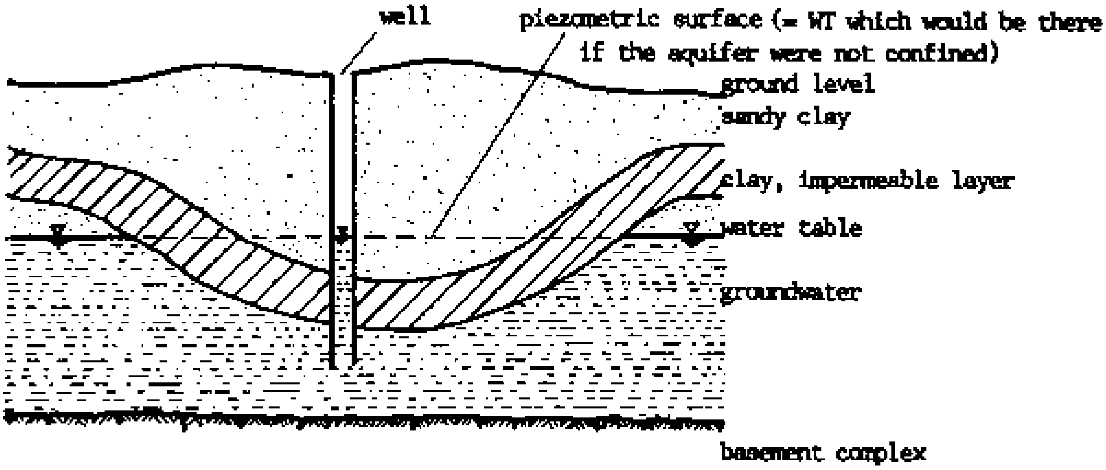

3. <u>Trapped (or Perched) Aquifer</u>

A trapped aquifer is a limited aquifer surrounded by impermeable layers. The recharge is limited; therefore, a well tapping a trapped aquifer can be exhausted and dry out (see also 8.29/1).

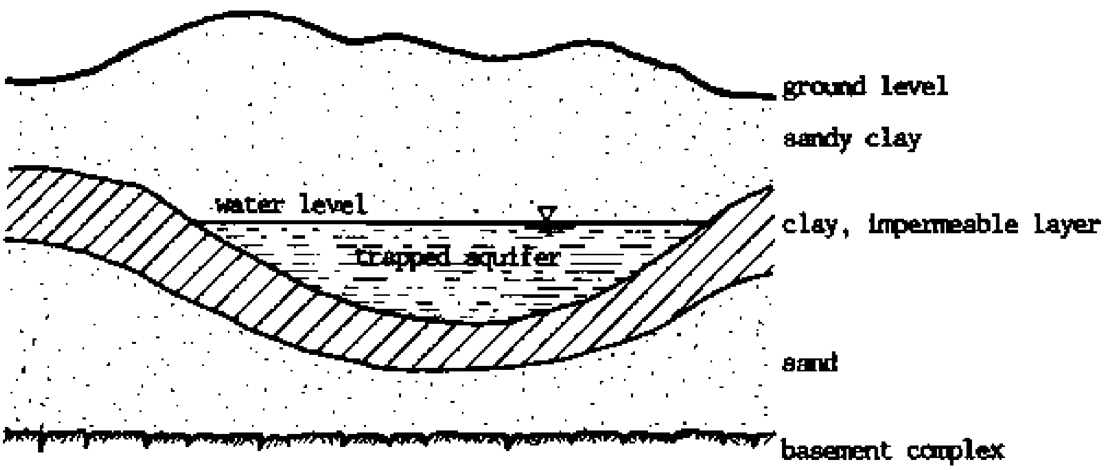

E) <u>Movement of Groundwater</u>

Groundwater can move in two different directions (or mixtures of the two):

1. Vertical Movement

Rainwater infiltrates vertically into the ground by gravity. Also, strong pumping in a well can force the water to move vertically downwards through different layers. Vertical movement is the main movement of groundwater.

The infiltration of water into the ground is influenced by the following factors:

- Steep slopes cause quick run-off, and there is little infiltration into the groundwater.

- Gentle slopes hold the water longer and favour infiltration. They often offer more favourable conditions than completely flat areas.

- Flat areas often develop a tight surface which hinders infiltration.

- Moderate rainfall over an extended period favours infiltration.

- Heavy rains saturate the surface quickly and most water is running off. They compact the soil and reduce its ability to absorb water.

In a vertical cross-section, the ground can be divided into different zones according to their water content:

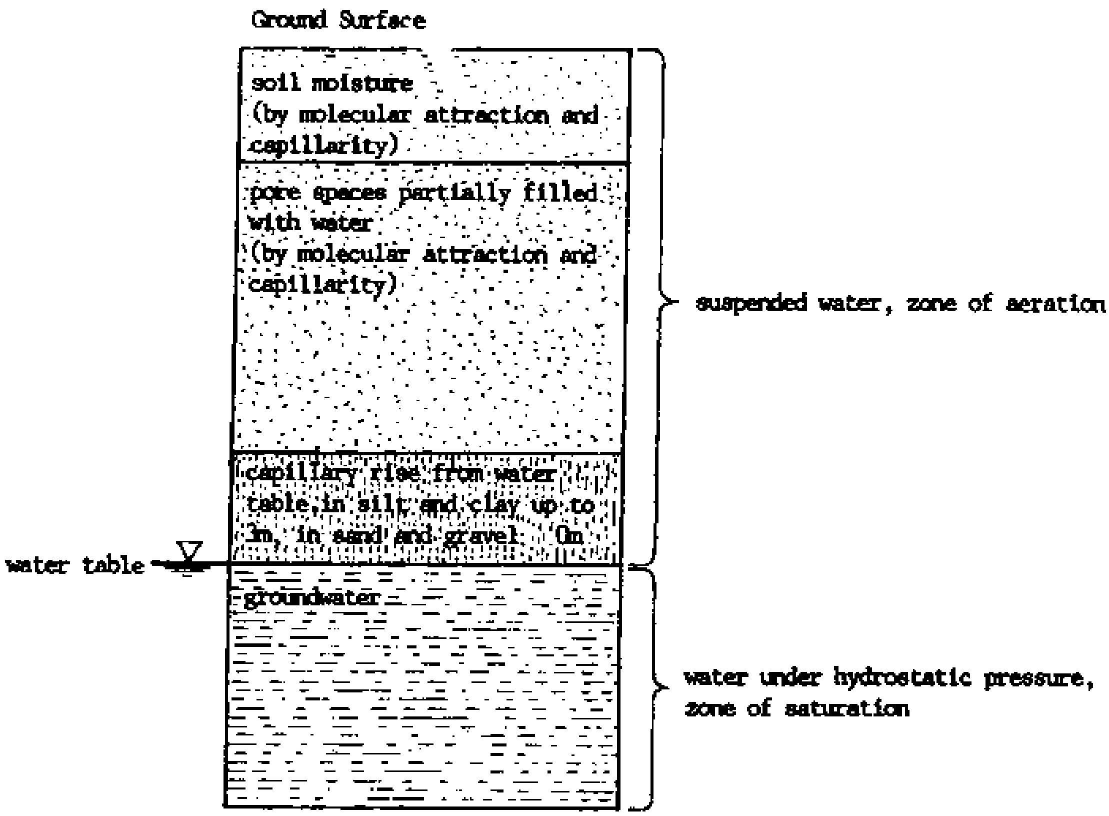

2. Horizontal Movement

The groundwater moves horizontally into a well. Water also can travel horizontally through an aquifer, especially, if the aquifer is sloping. However, this movement is very slow and very limited in distance.

Therefore:

Do not draw more water from a well than is recharged by rain nearby! See also 8.29/1.

F) Connection between Rivers and Groundwater

A river and the groundwater can be connected in different ways:

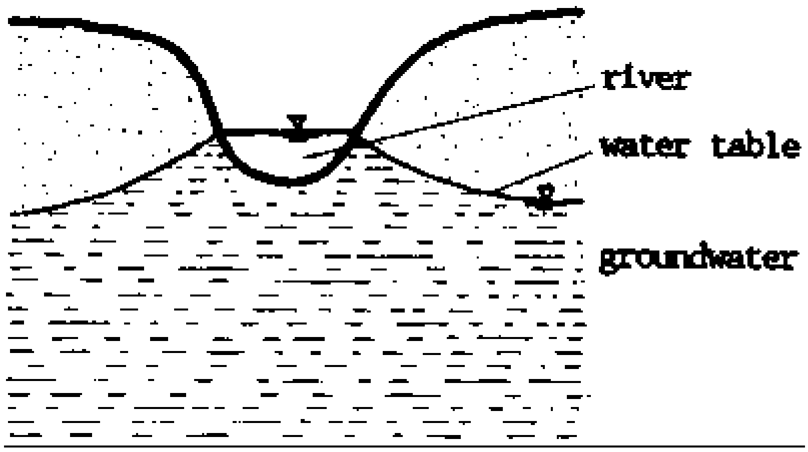

Influent Stream: looses water to the aquifer

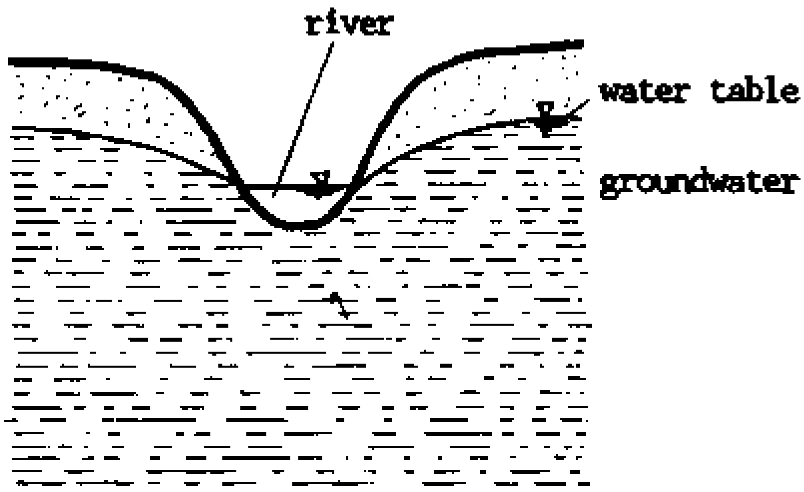

Effluent Stream: gains water from the aquifer (the sane stream may have influent and effluent sections)

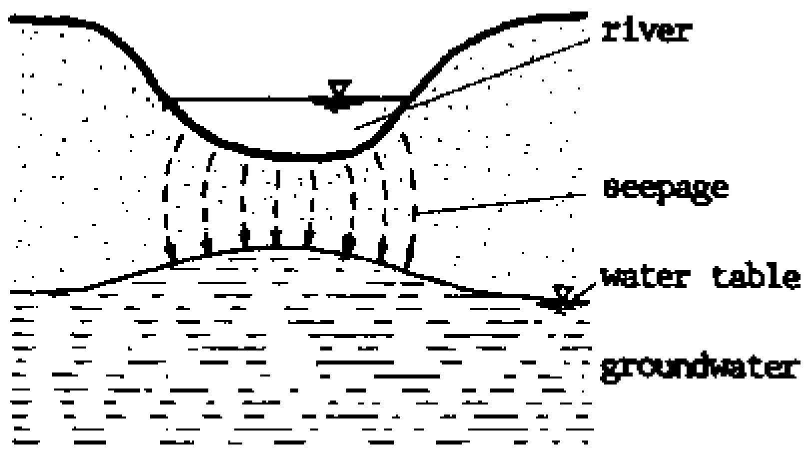

Stream only Flowing Periodically: dry during drought

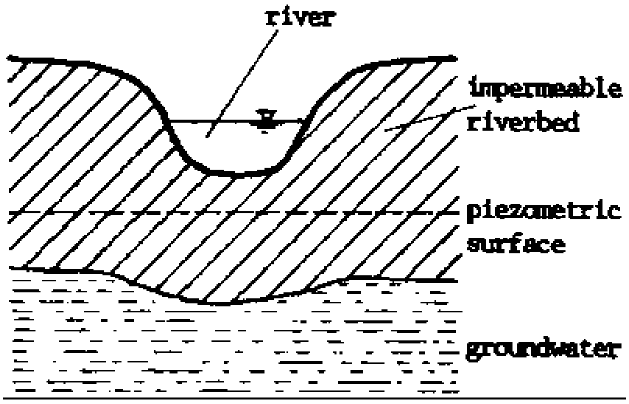

Stream Isolated Hydraulically: from an artesian aquifer below it

G) Types of Soils as Aquifers

Type of Soil	Porosity	Permeability	Difference betw. Unsaturated and Saturated Zone	Cleaning Capability	Rechargeability	Quality of Aquifer	Possible Problems
clay	good, can store lot of water	limited or impermeable, however, no continuous layers	several meters	good	fair	fairly good	slow intake, limited recharge
sand	good, can store lot of water	very good	no	very good	very good	very good	quicksand, collapsing
gravel	very good can store lot of water	very good	no	no	good	very good	collapsing, easily polluted
weathered rock	good	good	no	bad	very limited	good if nothing else available	only limited layers, therefore, limited amount of water
rock (= basement complex)	no except in cracks	no, except in cracks acting as pipe	no	no	very limited	good if nothing else available	difficult to hit the cracks, difficult to dig, limited storage water can be salty because of dissolved minerals
mixtures of soil types	properties differ from site to site						

8.9 Desertification

Is 41,17-20; Jer 6,8; Mi 7,13

Sudan is in danger of becoming a desert. The desert in the North approaches the South by 6 km every year. That means, if nothing changes, the desert may reach Juba in 100 years time, that is just four generations.

The following contributes to desertification

- less rain,

- less forests through cutting of trees and burning of grass,

- less fertile soil because the soil is stripped off its vegetation and thus blown and washed away,

- big agricultural schemes (through digging by tractor, cutting of trees, pesticides and artificial fertilizers),

- Jonglei Canal,

- bombing, spraying of herbizides in war, atomic bomb,

- too many animals and, thereby, overgrazing,

- overpopulation and, thereby, overcultivation,

- exporting timber and charcoal,

- boreholes with water tanks in remote areas (attracting many people and animals).

What can people do to stop desertification?

- Stop burning grass!

- Plant and care for trees!

- Plant hedges around fields!

- Slow down the run-off of rainwater by small dams and ditches across the run-off direction in your gardens!

- Minimize firewood, charcoal and paper consumption!

- Reduce the number of animals!

- Do crop rotation!

- Manure your fields!

8.10 Wells

A) Tapping Groundwater

A hole dug or drilled into a saturated soil layer and lined to prevent collapsing is called a well.

The static water table (= undisturbed water table) is the level of groundwater if no water is pumped from the well.

The draw-down of a well is the difference between the undisturbed water table and the water table in the well while pumping (= disturbed water table).

If more water is pumped from the well than enters from the surrounding groundsoil into it, the water table will sink.

If less (or no) water is pumped than entering the well, the water table will rise (but, of course, never above the static water table). If the same amount of water is pumped as enters the well, the water table remains constant. This water table is called "dynamic water table". The amount pumped is equal to the yield of the well (which is the capacity of the groundsoil to fill the well). The yield of a well can be measured by test pumping. The pump's yield is gradually increased. When the water table remains constant, the pump's yield is equal to the well's yield.

Summarizing, we differentiate three different types of water tables:

No.	Name	Description
1	static = undisturbed water table	water table without pumping
2	disturbed water table	water table while pumping at any rate, either sinking or raising
3	dynamic water table	water table while pumping with a specific rate equal with the water entering the well; water table remains constant

During pumping the water is drawn from an extended area around the well. By pumping we do not only empty the volume inside the well, but also a space in the shape of a funnel around the well (also called “cone of depression” or “draw-down line”). The volume pumped from outside the well can be as big or even much bigger than the volume pumped from inside the well, depending on the diameter and the draw-down. The greater the draw-down, the more water needs to be pumped from outside, and the more difficult it is to lower the water table further.

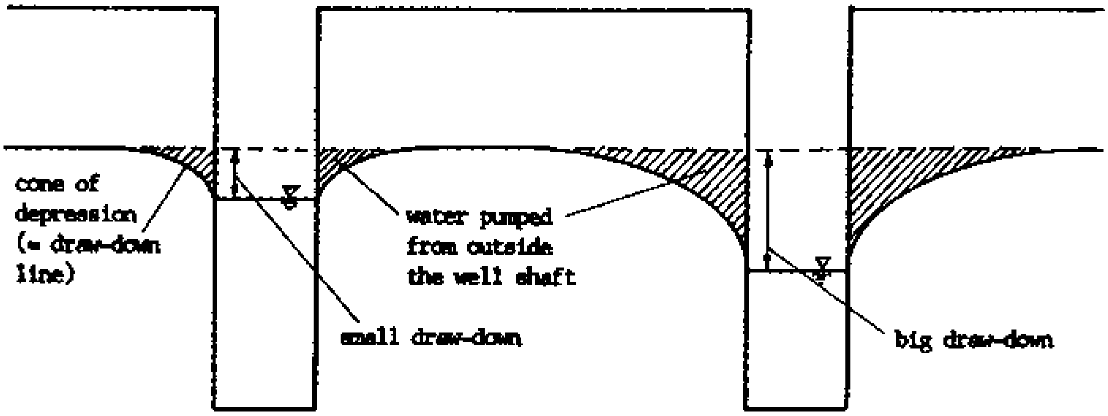

Big diameter well and small diameter well (borehole) with the sane draw-down:

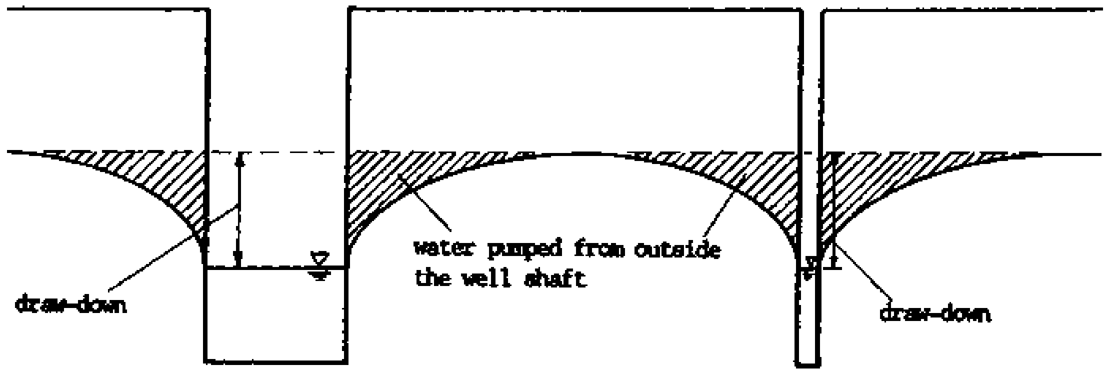

The cone of depression differs in shape and size depending upon

1. pumping rate,
2. length of pumping period,
3. aquifer characteristics,
4. slope of water table,
5. recharge within the zone of influence of the well.

B) <u>The Elements of a Well</u>

Each well consists basically of the following elements:

Name	Function	Construction
intake = bottom section	- allows water to enter from the ground into the well excluding the soil - provides storage reservoir	- lining with seepage holes, or - porous lining (filter rings), or - filter pipes for casing
shaft = middle section	- provides access to the well bottom - prevents pollution by surface water - prevents collapsing	- lining with concrete rings, or - brick lining, or - casing pipes
well head = upper section	- prevents or reduces pollution - provides facilities for drawing water	- preferably sealed (concrete cover, apron, drainage) - hand pump, engine pump, or bucket system
well surroundings	- prevent pollution by animals - control use	- cleaned, fenced area

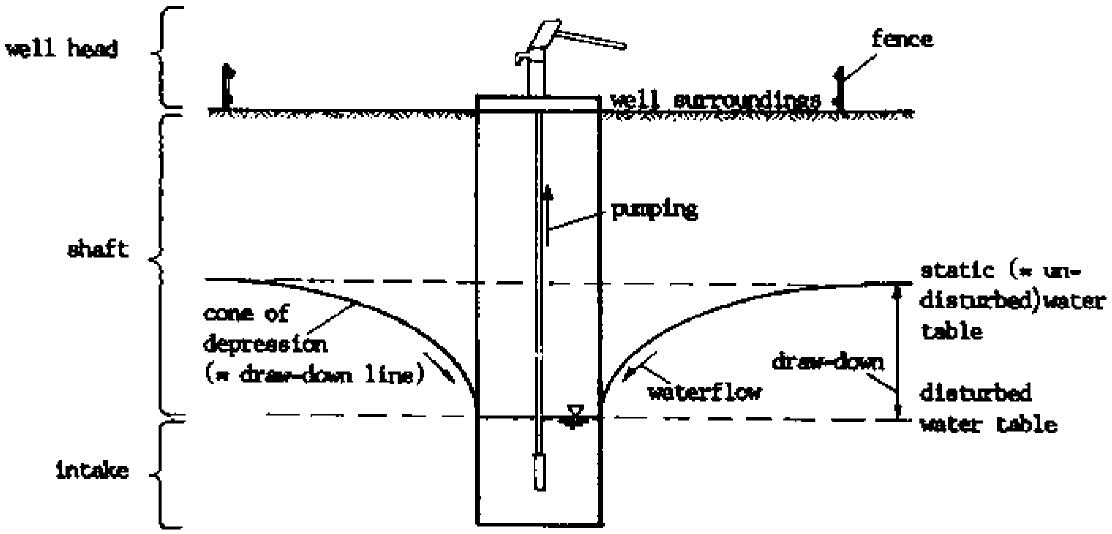

C) Influence of Diameter

The diameter of a well has the following influence on the function:

Influence on	Increasing Diameter	Reducing Diameter
water	- increase in yield - more storage capacity	- less yield - less storage capacity
construction	- more digging - thicker lining necessary - more materials needed - more difficult to pump during construction - more space during construction for 2-3 people - more danger of collapsing - better ventilation	- less digging - less lining - less materials - easier to pump during construction - narrow for digging (only one person can dig) - more stable - danger of ventilation problems
suitability	- in aquifer with low permeability (slow intake) - in not too deep wells	- in aquifer with high permeability (quick intake) - in deep wells

It is important to choose the correct diameter suitable for the particular location. Huge diameters (up to 10 m) are suitable for aquifers with very slow seeping in.

Big diameter wells (Ø 1.40 to 4.00 m) are suitable where the permeability of the soil is limited and the water enters slowly into the well. In these cases a big filter surface and a big storage capacity are necessary.

Medium diameter wells (Ø ca. 1.10 m) are suitable where the groundwater is deep.

Small diameter wells (boreholes) are suitable in rock, in case of very deep water tables. The soil must be permeable, because the storage capacity of boreholes is very little.

For diameters of concrete rings, used for well construction, see also 8.16/4ff.

D) <u>Increasing the Yield of a Well</u>

The yield of a well can be attempted to be increased by one or several of the following measures:

1. Increase the depth of the well.
2. Increase the diameter of the well.
3. Clean cracks in the intake area.
4. Clean away collapsed clay around the lining and replace it by gravel.
5. Increase the porosity of the intake lining (i.e. by additional holes).
6. Pump the well for few days as much as possible (This opens ways in the groundsoil).

However, the yield of a well can only be influenced to a certain degree. It depends on the location chosen, the soil conditions, and the quality of the aquifer. Even a limited yield of a well can be useful in a certain location, and the conditions given by nature need to be accepted.

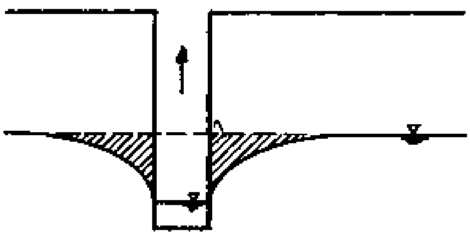

original well

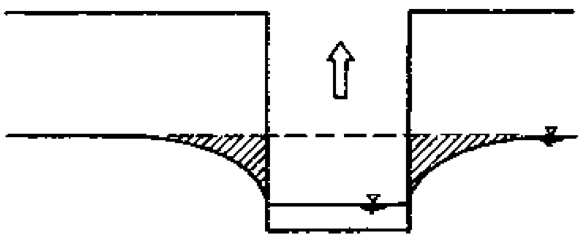

increasing the yield by increasing the diameter

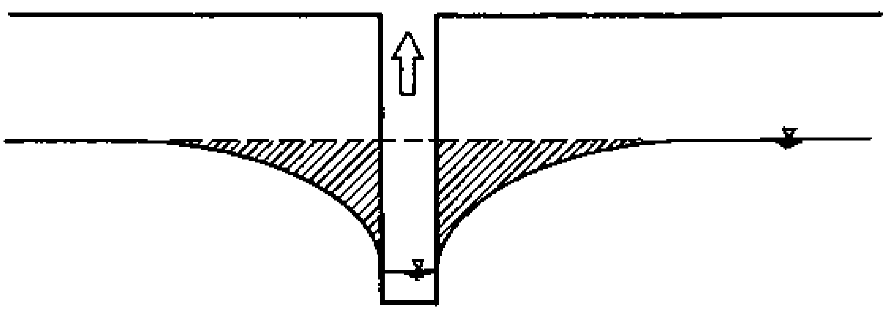

increasing the yield by increasing the depth

8.11 Comparison of Borehole and Hand Dug Well

Boreholes and hand dug wells can be differentiated according to the following features:

No	Feature	Borehole	Hand Dug Well
	Drawing	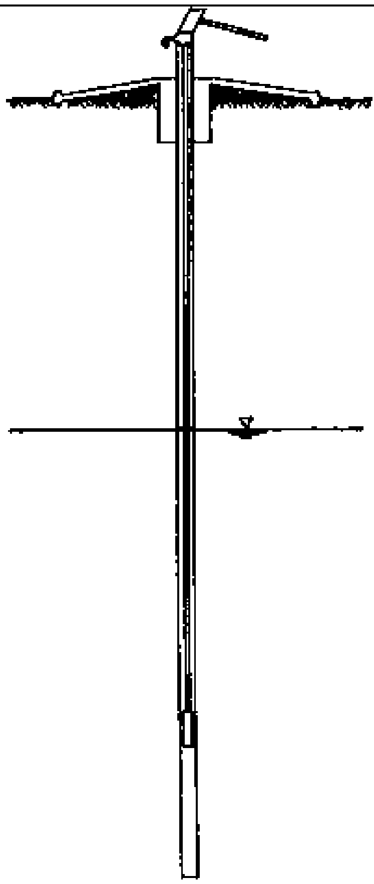	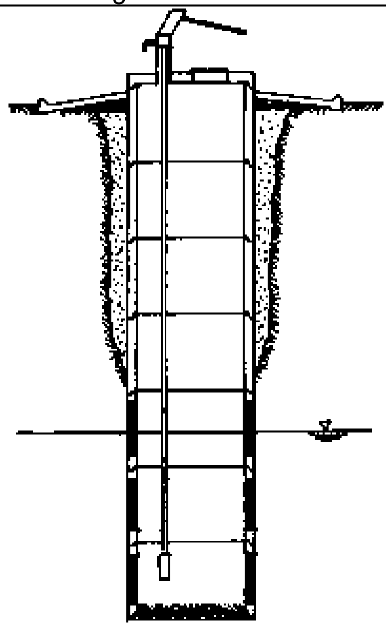
1	Definition	well excavated with equipment from the surface	well dug by people enter-ring the well
2	Depth	deep: 10 to 200 m see 8.7/1	shallow: 3 to 50 m (in exceptional cases up to 150 m)
3	Diameter	small: 5 to 20 cm	big: 1 to 4 m (a person can enter)
4	Form	round	round or square
5	Intake	only from the side through filter casings	from the side through filter rings and from the bottom
6	Storage capacity	relatively small because of small diameter	large because of big diameter
7	Well shaft	casing from steel or PVC pipe or no lining in rock	lining from brick wall or stone wall or concrete rings or no lining in rock
8	Well head	pump with platform see 8.19/3f	open with platform or closed with concrete slab and pump; see 8.19/5f
9	Drawing of water	by handpump or by engine pump or by bailer see 8.24	by rope and bucket or by winch or by handpump or by engine pump; see 8.24
10	Digging	drilled by drilling rig, sometimes by hand	dug by hand

No	Feature	Borehole	Hand Dug Well
11	Labour needed	high-skilled labourers in small numbers	some skilled and many unskilled labourers needed (= labour intensive)
12	Time needed	relatively fast	time consuming
13	Material needed	casing pipes, cement, sand, gravel, water, pump, etc.	cement, sand, gravel, reinforcement, pump, etc.
14	Equipment needed	highly sophisticated machinery (= capital intensive)	hand-tools like pick axe, shovel, bucket, rope, etc.
15	Energy needed	fuel, engine oil	human energy
16	Space needed	large area needed for rig	large area needed for excavation
17	Accessability required	for heavy lorry	for pick-up, eventually only for people footing
18	Transport needed	lot of transport needed	little transport needed
19	Risks involved	common dangers of working with lorries and heavy machinery	danger of working inside a well
20	Costs	very expensive	moderately expensive
21	Availability of resources	most resources from abroad (rig, fuel, casing, highly skilled labour)	most resources from with in the country
22	Community participation	very limited	community can easily participate in construction
23	Water quality	safe if surroundings clean, platform intact, groundwater not polluted	safe if closed and surroundings clean and groundwater not polluted
24	Yield	depending on conditions, often limited, esp. in rock	depending on conditions, often quite high
25	Maintenance	maintenance of pump, daily cleaning of surroundings	inside cleaning yearly, daily cleaning of surroundings, maintenance of pump, if installed
26	Rehabilitation if yield drops	hardly possible	cleaning and digging deeper possible
27	Life time	limited by corrosion of casing, clogging of filter casing, break-down of pump	limited by eventual dropping of water table
28	Beneficiaries	well users, few local labourers, foreign companies	well users, local labourers, local manufacturers and suppliers

The above mentioned factors determine whether a borehole or a hand dug well is suitable for a particular situation. Under certain conditions, a hand dug well is not suitable, but a borehole can be drilled. Under certain conditions, a borehole is not suitable, but a hand dug well can be constructed. Under certain conditions, both borehole and hand dug well are possible (see 8.7/1).

When both borehole and hand dug well are possible, governments, development agencies and many people tend to favour boreholes. In many countries facilities and training are readily available for boreholes, but neglected for hand dug wells. This is a bias towards foreign resources and technology.

SCC's water and sanitation project pursues a different policy: Wherever construction of hand dug wells is possible, they should be favoured because of maximum utilization of local resources and possible community involvement. The resources for boreholes shall be utilised where hand dug wells are not possible.

8.12 Selection of Well Sites

Gen 26,32

The selection of a suitable well site is essential for the success of a well.

A) <u>General Requirements</u>

A suitable well site has to meet the following requirements:

1. It should be within walking distance (1-2 km) from the relevant village.

2. It should be accessible by pick-up/truck during the construction phase, and accessible for the villagers throughout the year.

3. It should not be within 100 m of cattle pools, latrines or other health hazards (like septic tanks, workshops, etc.), and preferably upstream of these. The distance depends on the soil conditions. However, 100 m lies on the safe side. 50 m distance can be acceptable under certain conditions. Closed compost latrines require a distance of 6 m to the next well.

4. It should be safeguarded against flooding. Especially near rivers, the location has to be chosen so that the well is not threatened by any meandering of the river. Furthermore, the danger of flooding of low-lying areas should be taken into account.

5. The subsoil should not render the construction of a well impossible. It is difficult to make hand dug wells in rocky materials, even if these contain sufficient quantities of water in cracks.

B) <u>Geological Guidelines</u>

1. Layers of sand and gravel are the best aquifers.

2. In karstified limestone, the danger of pollution of groundwater from the surface is very great.

3. In granite areas, weathered rock may contain good aquifers.

4. In mountaineous areas, the best aquifers are found along the edges of the valley.

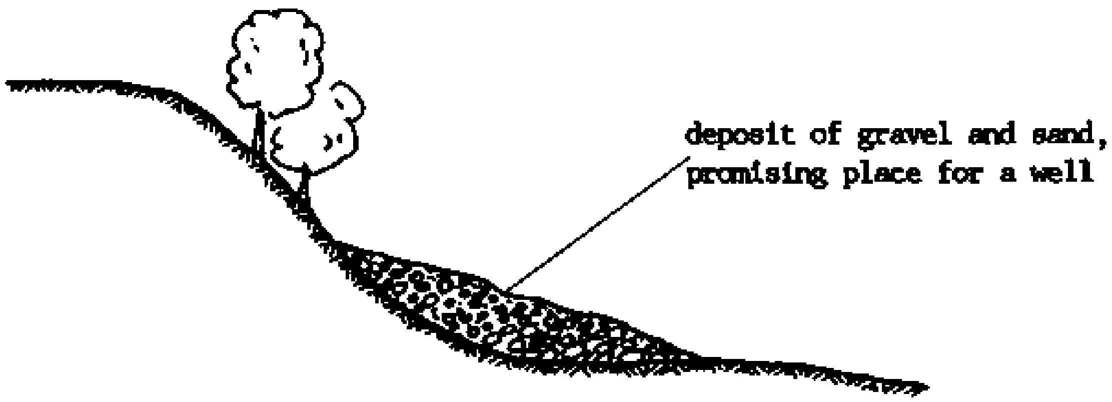

5. Good aquifers can be found under the riverbed and in the river banks (i.e. in “buried” rivers) or at lake sides.

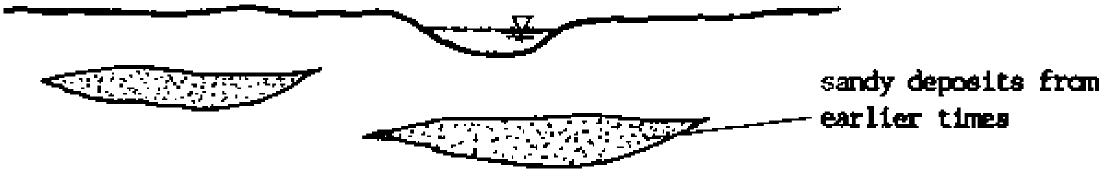

6. Outcropping granite hills in connection with small dry valleys and depressions are promising areas.

7. Crushed zones at fault lines (fractures, folds) are very good water bearing layers.

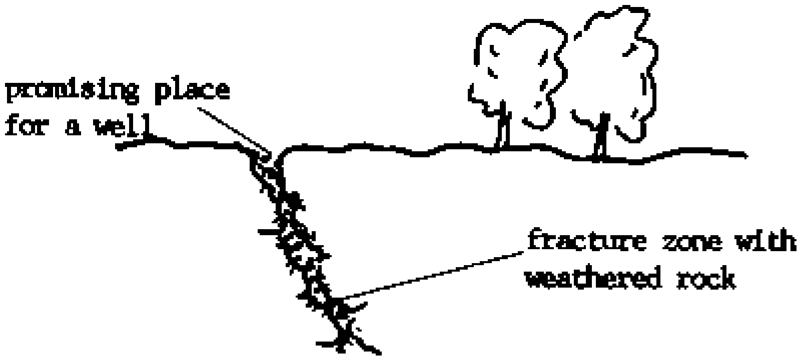

8. Vegetation such as banana trees, date palms, sugar cane, ever green areas, indicates shallow groundwater (0-5 m).

9. Vegetation such as mango trees, nim trees, etc., indicate deeper groundwater.

10. Certain vegetation (certain trees, grasses, salty taste of sugar cane) indicates salty groundwater.

11. Deposits of clay suitable for making pots can indicate near ground-water.

C) Methods for Well Siting

The following methods can be used for well siting:

1. Gathering information from existing wells
2. Gathering information from local well diggers
3. Hand augering
4. Divining
5. Well siting with instruments like resistivity meter, seismograph, etc.
6. Evaluating groundwater maps
7. Evaluating aerial photographs
8. Evaluating satellite photographs

The first three methods will be mostly available for small water projects. Good water supply technicans continuously gather information when they come across wells and, thus, gradually develop a feeling for soil and groundwater conditions, geology and vegetation. We also need to build up a respectful relationship with local well diggers and thus share knowledge and benefit from their rich experience.

8.13 Site Survey by Hand Augering

Hand augering is drilling a small diameter borehole by hand. It is a helpful tool amongst others for selecting a suitable location for a hand dug well (see also 8.12/2). The method is comparatively cheap and simple. It can be learnt quickly and does not require complicated equipment.

Hand augering is not possible under all circumstances. The limits depend on the hardness of the soil, the depth of the water table, and the perseverance of the technicians.

If the water table cannot be reached by hand augering, it might still be possible to construct a good hand dug well - the water table might be just below the reach of the hand auger.

A) Purpose of Hand Augering

Hand augering can be used for gathering the following information:

1. Presence or Absence of Groundwater (within the reach of the augering);

2. The Depth of the Water Table;

3. The Thickness of the Aquifer (= water bearing layer);

4. The Nature of the Aquifer: the type of soil of the aquifer, its content of gravel, sand, clay, and silt, and, thus, the permeability of the soil;

5. The Possible Recharge Rate (= yield) of the well, concluded from the permeability of the aquifer soil;

6. Water Quality (salty or not salty, etc.);

7. Possible Movements of the Water Table, concluded from the colours of the augered material;

8. Minimum Depth of the Well, concluded from the depth to hard rock or the first impermeable (= impervious) layer.

9. Possible Storage Capacity of the well, concluded from the depth to hard rock or the first impermeable layer;

10. Suitable Construction Method for the well, concluded from the thickness of the soil layers and their stability; (Is temporary lining or caissoning necessary? How thick is an eventual sand layer?); see also 8.14;

11. Presence of Single, Invisible Rocks Underground: in some areas single blocks of rocks are dispersed above and underground - if you hit such an underground rock, a well site suitable for digging might be just a few metres away;

12. Investigation of an Extended Area, like a river bank by augering a number of holes in a systematic way;

13. Presence of Water Table below a Dry Well by drilling inside the already dug and so far dry well.

B) Selecting Location and Time for Hand Augering

We will waste energy if we just start to drill holes without previous planning. Consider the following:

1. Collect all available information (see 8.12).

2. Study the map and see where there would be the best sites for augering.

3. Have a careful look at the area on site before you start augering.

4. Preferably drill when the soil is wet. Drilling in completely dry clay is very difficult.

5. If necessary, drill a systematic net of holes over a certain area, e.g. every 100 m:

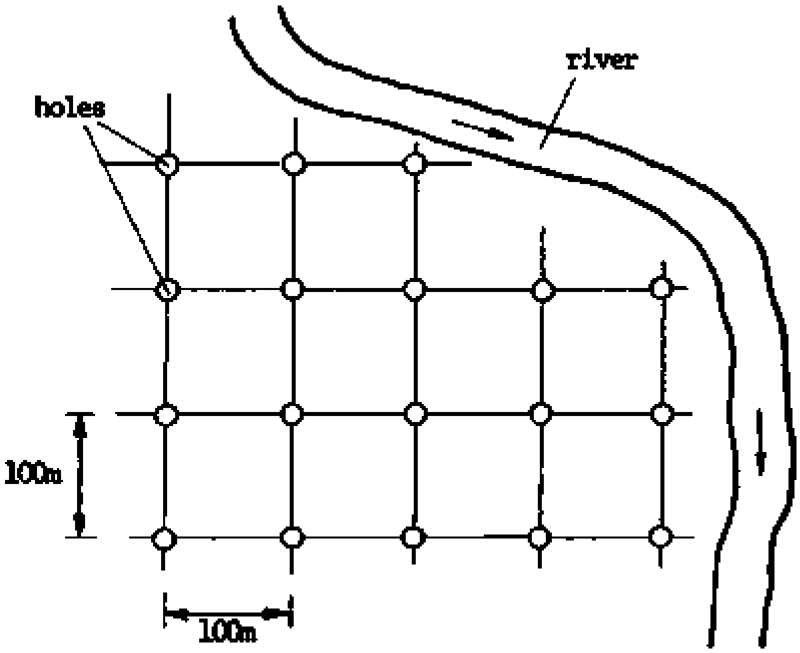

C) Hand Augering Equipment

Light weight hand augering sets can drill small holes of 5 or 7 cm diameter. Heavy weight sets can drill larger holes up to 10 cm diameter or even more. These types differ in the diameter of the bits, the thickness and strength of rods, handles, the type of couplings, and the number of people required; but they consist of the same elements and are to be handled in the same way.

A set of hand augering equipment consists of the following elements:

1. Handle

The handle can be extended by short pipes to increase the lever arm. The heavy weight set can be drilled by two or more people.

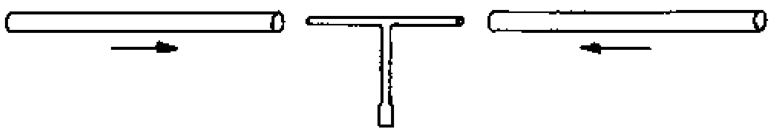

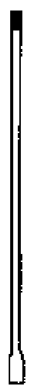

2. Extension Rod

Usually, extension rods are 1 m long. A sufficient number is required. The rods can be connected either by a bayonet coupling for light weight sets or threaded couplings for heavy weight sets. The threads are protected by thread protectors when stored.

Bayonet Coupling:

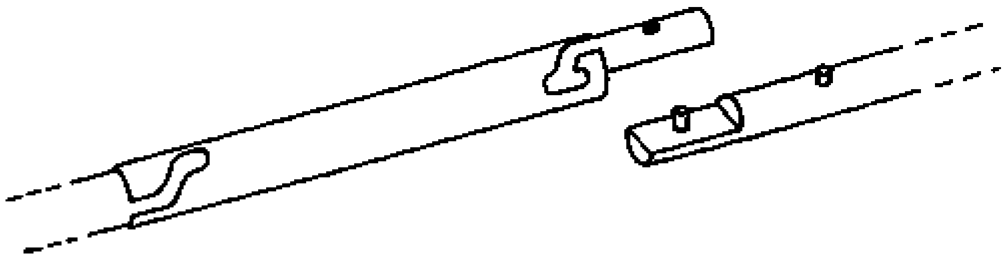

Threaded Coupling:

3. Open Clay Auger

The auger body of the open clay auger (= combination bit = combination auger) consists of two blades, the ends of which are forged into the auger's end. Upwards the blades diverge gradually up to the desired diameter. Depending on the width of the blades, the auger is suitable for clay, sand or coarse sand if the soil is very soft.

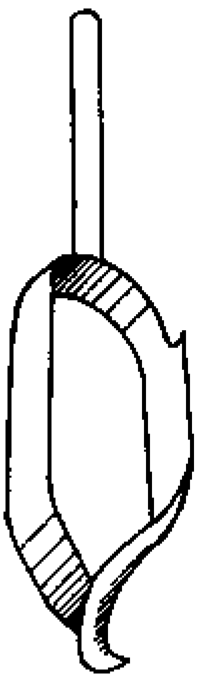

4. Flight Auger

This bit is made of a steel strip wound around the central rod in a spiral form. It is suitable for soft soils.

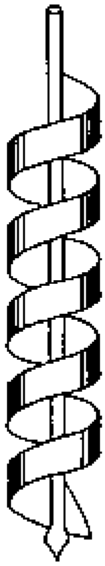

5. Stone Auger

The stone auger resembles the open clay auger, but the blades are longer. The bit is suitable for weathered rock.

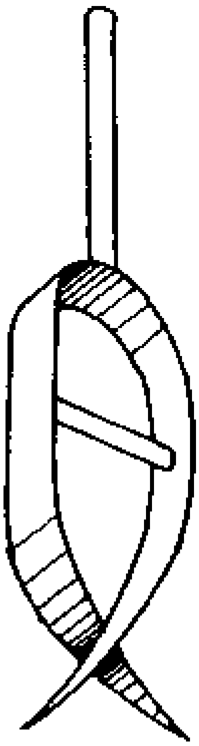

6. Stone Catcher

The stone catcher is made from a strong rod, curved in spiral form. It is suitable to catch stones and gravel embedded in clay soil.

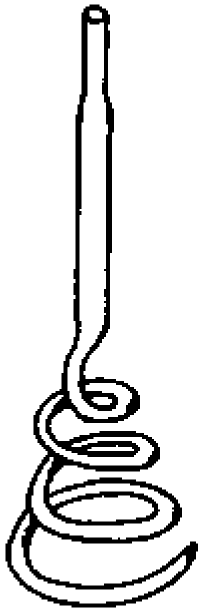

7. Screw Auger (= Spiral Auger)

This bit is made of a steel strip, forged in a spiral form. The diameter is smaller than the one of the other bits. With this bit hard layers can be broken loose and the material brought out with other auger types afterwards.

8. Riverside Bits

The auger body of these bits is a tube with two blades welded at the bottom. The sharp extremeties of the blades point at an angle downwards, a little outside the tube. The blades are spoon-shaped so that the soil is steadily pushed into the tube. This bit is suitable for use in hard, stiff soils and in all kinds of materials below water level.

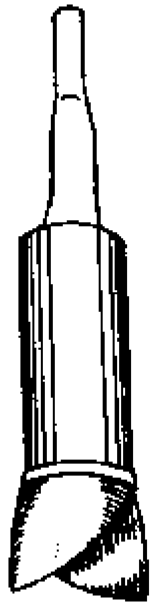

9. Bailer (= Pulse Auger)

The bailer is a 60 cm long tube fitted with a valve at the bottom. It is used for penetrating saturated layers by moving it up and down or for dewatering the hole for test purposes.

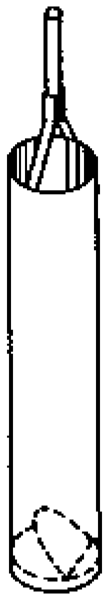

10. Auger Cleaner

The auger cleaner resembles a knife and is used for cleaning the augers.

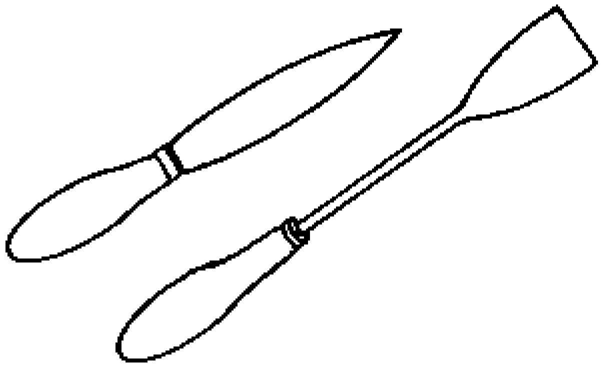

11. Meter

A water level meter has a plumb with a small cave in the bottom which produces a sound when reaching the water table in the borehole.

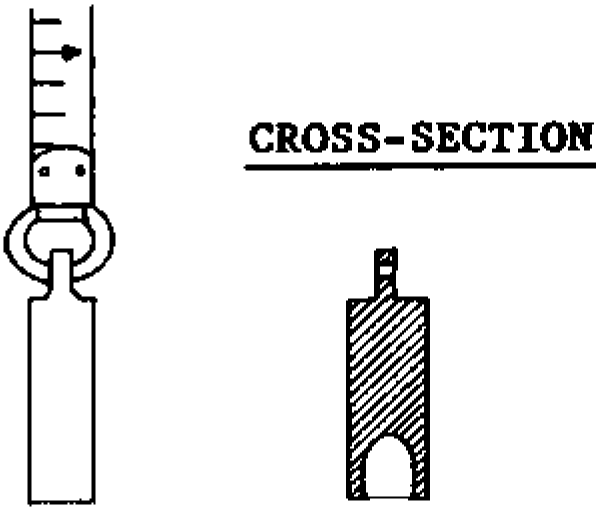

12. Diverse Tools

such as spanners, hammer, wire brush, nylon brush, oil, grease, etc.

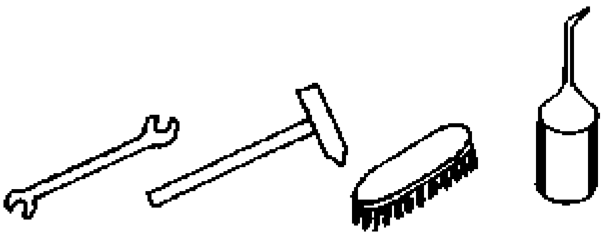

13. Equipment for Recording

such as writing pad, paper, pencils, forms, etc.

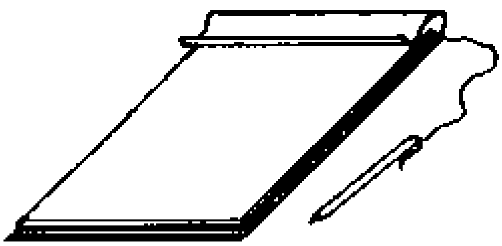

14. Tool Box

big enough for all parts of the equipment, including list of the contents of the tool box.

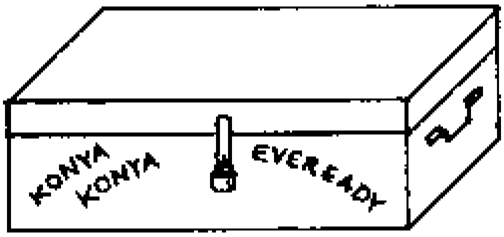

15. Sample Box

A sample box is a coverless, long and narrow wooden box, divided into a number of compartments. During the drilling, a sample of each 50 cm is placed in the box to prevent mistakes in the description.

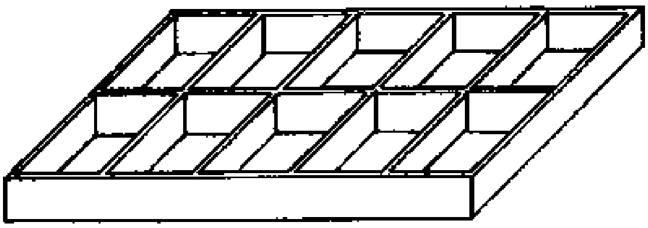

D) Step-by-Step Procedures of Hand Augering

For hand augering, follow these steps:

1. Connect the handle, a rod and a bit.

2. Drill by one or several people (for heavy weight set).

3. When drilling becomes hard, remove the auger and clean it.

4. Drill again. Continue in this way.

5. When the rod has almost disappeared into the hole, add another extension rod. Continue in this way.

6. Change the bits according to the soil type.

7. Never force the auger; if it will not turn with ease, change to a more suitable bit, e.g. the screw auger for breaking the material loose, and remove the soil with another auger.

8. Keep the threads always clean and greased. For storing, always protect them with a thread protector.

9. Put samples into the sample box every 50 cm.

10. Record <u>any</u> changes in the soil in a log (example for a well log see under E).

11. Try to drill as deep into the water table as possible.

12. If pumping equipment is available, make a test pumping.

13. Otherwise, dewater the hole with a bailer (= bail out the hole). Record the number of times the hole needs to be bailed and, thus, the number of litres you have bailed out.

14. If the hole goes dry, measure the depth of the water in the hole at 5 minutes intervals to gain the recharge rate.

15. After finishing augering, clean, dry and oil the equipment.

16. Record the water table after few hours.

17. Complete the records.

E) Hand Augering Log

Keeping careful records is much easier with the help of forms: Fill the form, "1. General Information", immediately after augering. Fill the form, "2. Soil Profile", during augering. Whenever there is a change in the soil, measure the depth. Draw a horizontal line on the form, "Soil Profile", at the measured depth. Note down all the information about the soil above this level also above the horizontal line. When you take a soil sample, record its number. Cross which type of soil you found, cross which colour it has, and cross if it is permeable or impermeable. Record all the information about the next soil layer below the horizontal line. Continue in this way for all the layers in the borehole.

Sudan Council of Churches * Munuki Water and Sanitation Project

HAND AUGERING LOG

Well No.	: ....
Community/Owner	: ....
Location	: ....

1. GENERAL INFORMATION

Auger hole No.			Test bailing		does not go dry
Location of the hole					goes dry
Date of augering			Number of bailers		
Season		rainy season	Volume of bailer	litres	
		dry season	W. Table after 5 min	m	
Time started			10 rain	m	
Time ended			15 rain	m	
Total time needed			20 min	m	
Vegetation		no vegetation	25 min	m	
		grass land	30 min	m	
		grass and bushes	WT after... hours	m	
		thin forest	Water		clear
		thick forest			turbid
					no smell
Special vegetation					bad smell
Bits used		open clay auger			not salty
		flight auger			slightly salty
		stone auger			very salty
		stone catcher	Damages of equipment		
		screw auger			
		riverside bits	Number of people		
first wet soil first water table (WT)	m m		Technician resp. Signature		

2. SOIL PROFILE

Auger hole No. ....

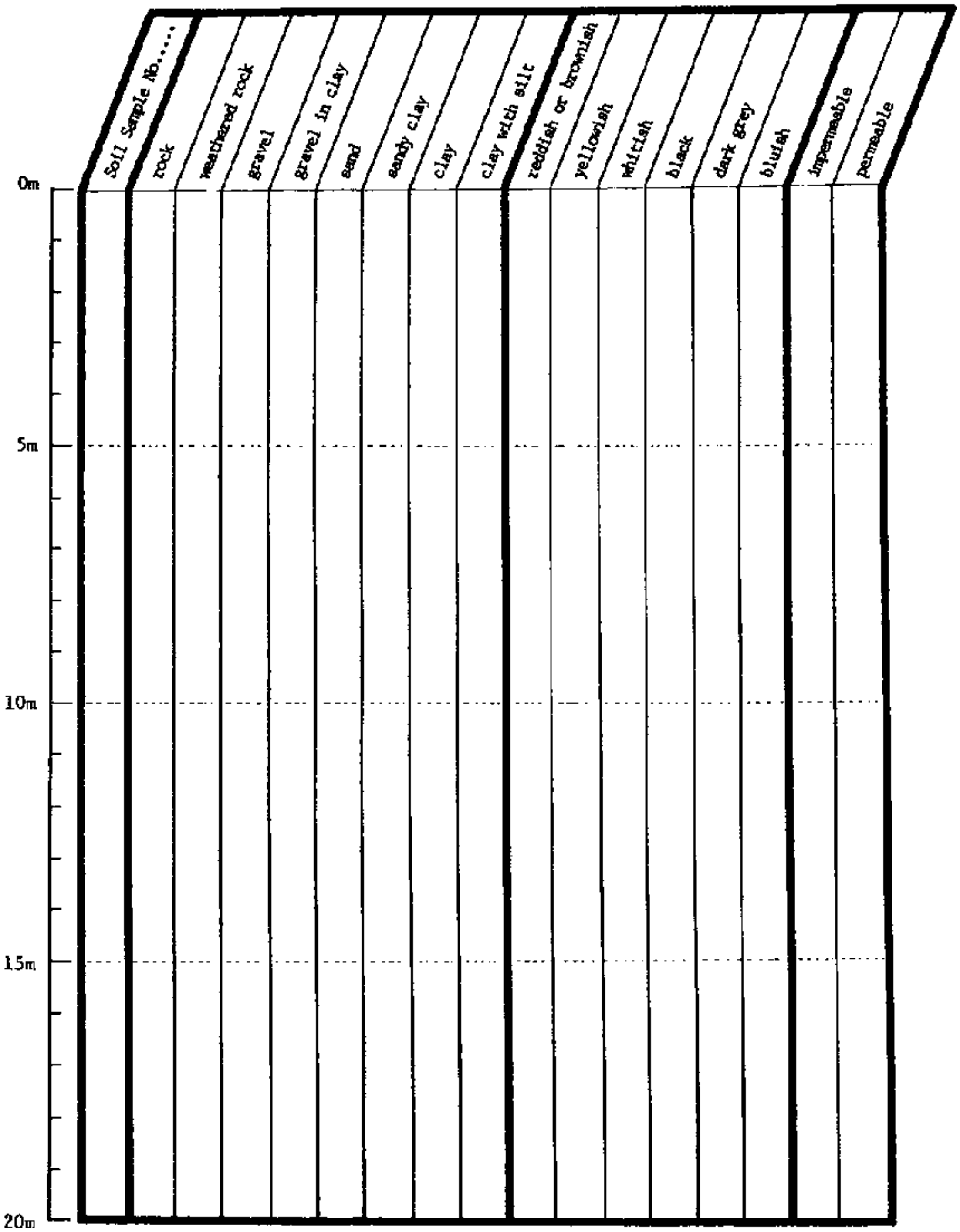

F) Evaluation of Hand Augering

The evaluation of hand augering requires experience. However, consider the following aspects when filling in the form, “HAND AUGERING EVALUATION” (see 8.13/12):

1. If you have drilled several holes for locating one well, choose the hole with the thickest aquifer as well site.

2. The water table measured after few hours is the static water table for the season at the time of augering.

3. Conclude from the colour of the augered material on the expected change of the water table between the seasons:

- Reddish soils are well drained and well aired. Such layers are most likely not below the water table at any time.

- Yellowish soils indicate that the soil is full of water for long periods. Such layers might be below water table for a part of the year (during rainy season).

- Bluish colours in dark grey soil indicate that the soil is water-logged most of the time - similar to the yellowish soils.

- Black and dark grey soils are usually badly drained and, therefore, likely to be permanent below the water table.

Also, consider your knowledge about the change of the water table during the seasons in the area; generally, the deeper the water table, the less is the seasonal change. Seasonal changes of several metres are more likely in shallow wells (but they must not necessarily be as great).

4. Conclude from the aquifer's soil type and the thickness the expected recharge rate. The coarser the material, the easier it will release its water content.

5. Judge whether the water is expected to be drinkable or not, considering the salt content.

6. Conclude from the depth of hard rock or the first impermeable layer how deep the well must be. It is advantageous to dig 0.50 m or 1.00 m into these layers, if possible. Add about 0.40 m for the well head. Divide the minimum depth by 0.85 cm, the nominal height of a concrete ring, to get the required number of rings. Add one or two rings to be on the safe side.

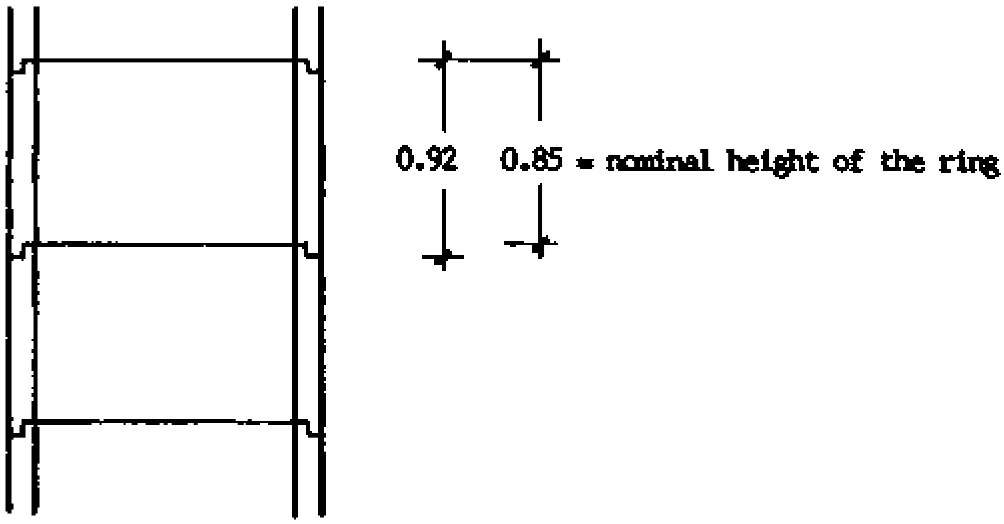

7. Determine the required number of filter rings by looking at the expected height of the water column in the well.

8. Decide which diameter is suitable (see also 8.10/4 and 8.16/6).

9. Suggest a suitable construction method according to the stability of the soil in shaft and intake (see 8.14).

10. Suggest a suitable water lifting device according to the expected depth, recharge rate and the social circumstances (see 8.29 and 8.24).

Sudan Council of Churches * Munuki Water and Sanitation Project

HAND AUGERING EVALUATION

Well No.	: ....
Community/Owner	: ....
Location	: ....

Auger holes No.			expected stability of well shaft		good
Well location suggested at hole No......					medium
Static Water Table		... m dry season			low
		... m rainy season	expected stability below water table		good
Aquifer soil type					medium
					low
Aquifer thickness		m	construction method suggested		
Recharge rate expected		high			
		medium			
		low			
Water quality expected		drinkable			
		not drinkable			
minimum depth of well		m	water lifting device suggested		
total No. of rings		pcs			
fully concrete rings		pcs	Remarks:		
filter rings		pcs			
diameter suggested		m			
expected water storage capacity		... m or... rings V =.....m^3			
prepared by:			Date:		Signature:

8.14 Construction Methods for Hand Dug Wells

There are many different ways to construct a hand dug well. The following overview should help to select the suitable method for a specific situation. You might be forced to use different methods for wells within the same area.

A) Types of Lining

The lining of a well is a layer of material added to the inside surface of a well. The lining serves the following purposes:

- It prevents the well from collapsing.

- It protects people working inside the well.

- In the bottom section (= intake), it allows water to enter the well.

- In the top section (= shaft) it prevents contaminated surface water from entering the well.

- It serves as a foundation for the well head.

The most important types of well lining are:

1. <u>No Lining at All</u>

No lining at all is, of course, the cheapest and simplest possibility, but only under suitable soil conditions like hard rock or, above the water table, in very hard clay.

2. <u>Lining with Masonry</u>

Masonry lining can be

- from bricks
- from stones.

Masonry lining is advisable if bricks or stones are easily available near by, and cheap. However, more cement is needed for masonry than for concrete rings which, again, increases the cost. A very important factor in the decision might be if masons are available locally who are able to do brick lining, but no technicians for constructing a concrete lining are available. A masonry lining is not as strong as a concrete ring lining. It also requires a soil which is temporarily stable on its own until the lining is built up. In soft, sandy soil a masonry lining is excluded for the above reason. The depth possible for masonry lining is limited because the transport of materials gets much more difficult with increasing depth.

3. <u>Lining with Concrete Rings</u>

Concrete ring lining can be

- cast outside the well and lowered into the well later on;
- cast in situ (= inside the well).

Concrete lining is suitable in any soil condition. However, the equipment, the materials (cement, sand, gravel, reinforcement) and the skilled labourers must be available at reasonable distance and price. Lowered concrete rings are the best option for very deep wells.

Other types of lining, e.g. timber shuttering, are of no importance.

B) <u>Constructing a Collar</u>

A collar is a short wall around the mouth of the well. It serves the following purposes:

- It protects the well mouth from being washed out and widened by rain.

- It protectes the well mouth from collapsing due to the work on top.

- It protects the well shaft during digging.

- It provides a firm and safe working place for the labourers at the well mouth.

It is advisable to build a collar whenever the well is expected to be deep and digging will need a long time (for all methods described under C, except No. 5 and 7).

Construct the collar as follows:

1. Dig a pit wider than the well diameter:

2. Build the collar from bricks or stones in cement mortar:

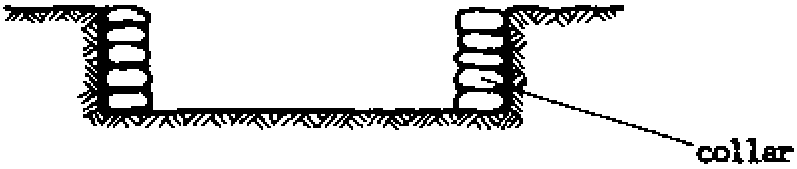

3. Continue digging inside the collar:

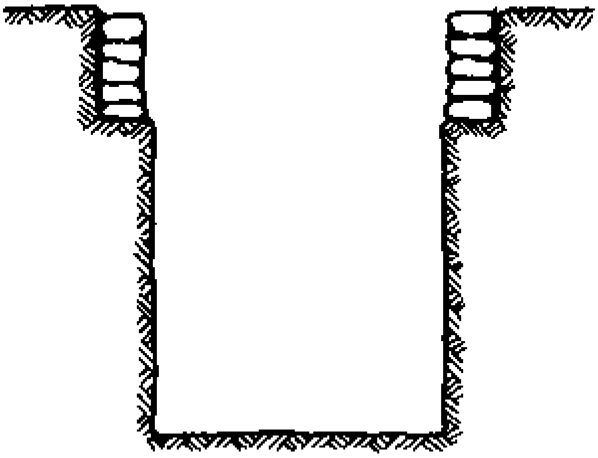

SCALE 1:50

4. If there is a rock layer near, use it as foundation for the collar:

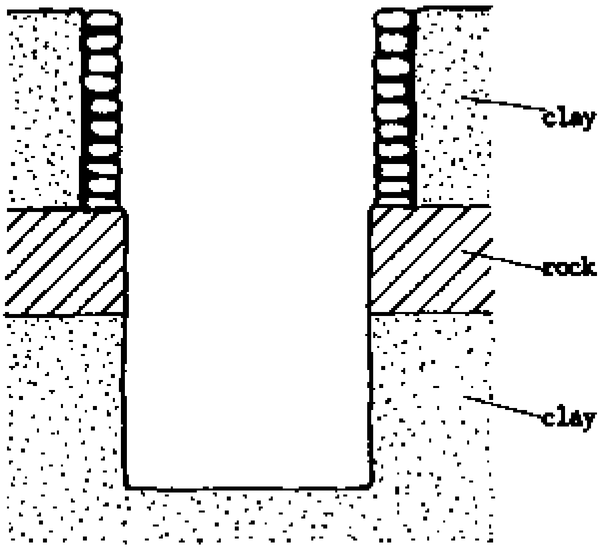

SCALE 1:50

C) <u>Different Construction Methods</u>

When constructing a hand dug well, different types of lining can be used separately or can be combined. Different methods are briefly described and compared in the following (incomplete) list:

1. Caissoning below Water Table and Concrete Ring Lining

For this method, follow these steps:

- Build a collar.
- Dig until the water table is reached. Stop at the first signs of water.
- Lower a ring.
- Dig into the water table inside the ring while the ring slides down.
- Lower more rings on top whenever necessary.
- Dig into the water table as far as possible.
- Line the whole well with concrete rings and backfill it.

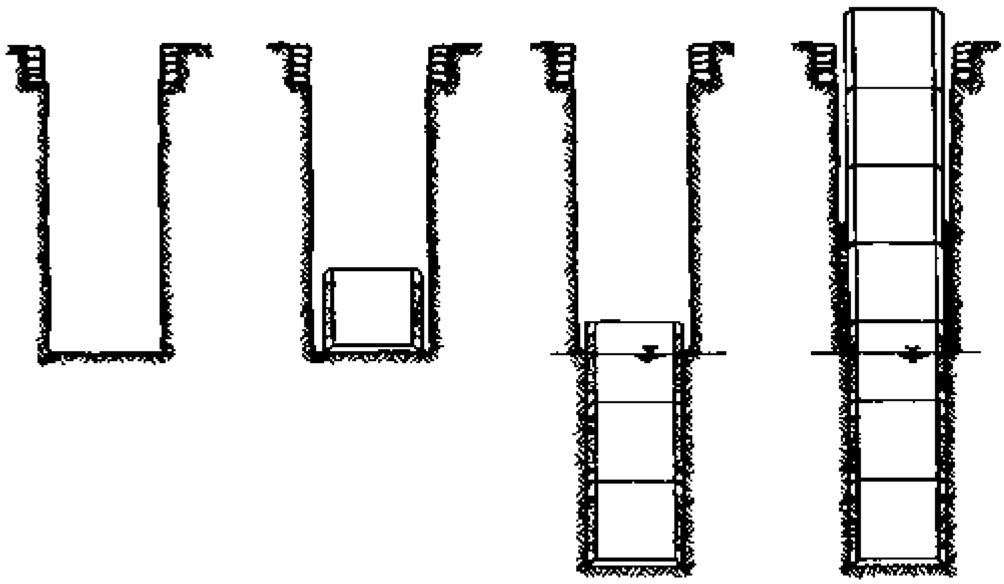

SCALE 1:80

This method is suitable for soil types which are stable above the water table, but unstable below the water table (such as clay, sandy clay, etc.). This method is very handy because it allows easy and quick digging above the water table, but provides protection below the water table. It allows for easily digging deep enough into the water. Constant observation is necessary because of the risk of collapsing. It is most important to stop digging before entering the water table because the soil becomes immediately soft and muddy when saturated. It is very difficult to correct a ring askew in mud, rather than digging in a straight, proper way from the beginning.

2. Lining after Digging

For this method, follow these steps:

- Build a collar.

- Dig the well until its bottom is sufficiently below the water table.

- Lower concrete rings to line the well below and above water table and backfill them.

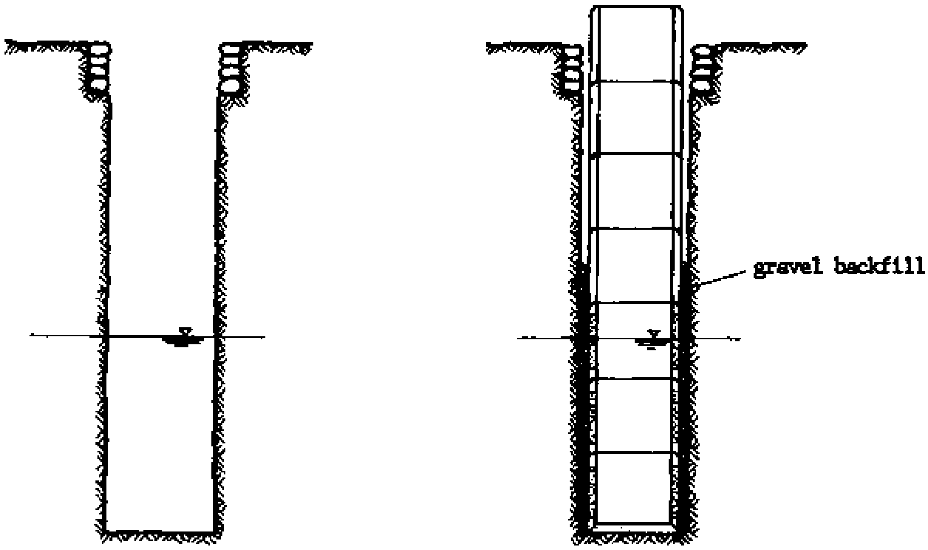

This method is only suitable in soil types which are also stable below the water table. This is the case, for example, for rock or weathered rock which is stable for the time being, but needs a lining in the long run because of cracks or mud fill-ins. The method is very handy.

3. <u>Completely without Lining</u>

This method consists only of two steps:

- Build a collar.
- Dig the well until its bottom is below the water table.

This method is only suitable in pure hard rock, without major cracks or mud fill-ins. You have no work with the lining, but digging itself will be very difficult and slow.

4. <u>Caissoning with Two Rings and Brick Lining</u>

For this method, follow these steps:

- Build a collar.
- Excavate 90 cm deep.
- Cast a ring in the hole with pipe moulds (see 8.16/7).
- Cast a second ring on top.
- Dig the well inside the rings while the rings slide down (= caissoning).
- Dig as deep into the water table as possible.
- Build a brick or stone lining on top of the rings and backfill it.

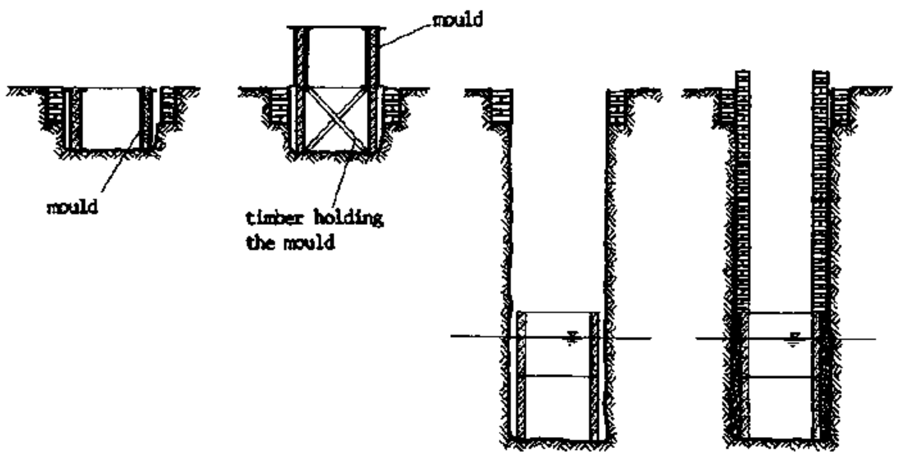

SCALE 1:80

With this method, it is easy to dig deep enough into the groundwater. No lowering equipment for rings is required, only a wooden scaffold and a pulley and a mould for the rings. Therefore, the method has advantages for very remote areas. Digging the full length of the well with two rings caissoning is not very handy, but helps to dig straight. The method is only suitable in soft, but stable soils, not in weathered rock or rock, because the rings tend to get stuck at the slightest protrudings of rock.

5. Caissoning the Complete Length of the Well

For this method, follow these steps:

- Cast the necessary number of concrete rings.
- Place the first ring with cutting edge on ground level.
- Dig inside the ring until the ring has almost disappeared into the ground.
- Roll the second ring near by.
- Turn it over until it sits on top of the first ring.
- Continue to dig until the second ring has almost disappeared into the ground.
- Place the next one on top, etc.
- Continue until you are deep enough into the water table.

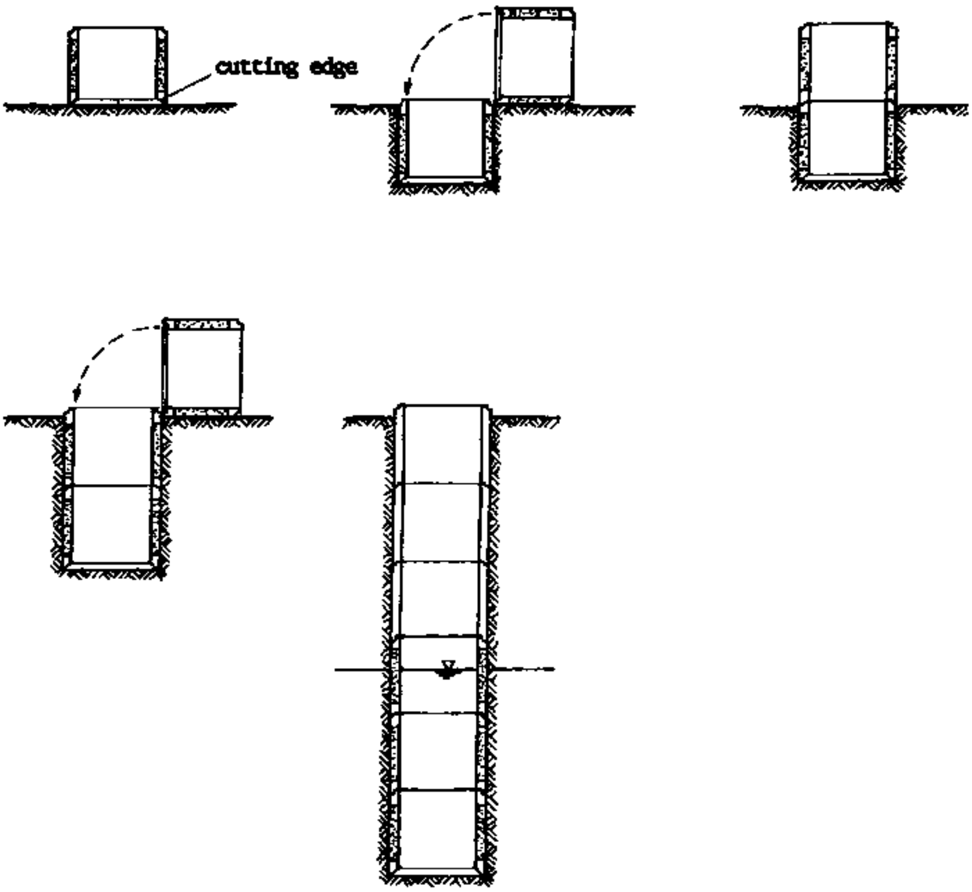

SCALE 1:80

With this method, it is easy to dig deep enough into the groundwater. No lowering equipment for rings is required. The method is only suitable for wells up to about 6 m deep, in soft soil, because the friction between rings and soil becomes too great and the rings would just not move downwards anymore.

6. Telescoping

For this method, follow these steps:

- Build a collar.
- Dig inside the collar 15 to 20 m deep.
- Build a foundation in the bottom from concrete or stones in cement mortar.
- Line this section by lowering concrete rings of large size (or by masonry).
- Dig inside the lining until the water table is reached.
- Build a foundation in the bottom.
- Line the second section with concrete rings of medium size (or masonry).
- Lower rings of small size.
- Dig into the water table while caissoning.

Drawing see next page.

This method is suitable for very deep wells because it enables us to dig deep and it provides more safety for the technicians. If there are rock layers in between, they can be used as foundation. The method is obviously quite laborious. The diameter of the well below the water table is narrow.

Telescoping can also be used for deepening an already existing well in order to increase its yield, e.g. because the water table has dropped (see also 8.16/4).

Telescoping:

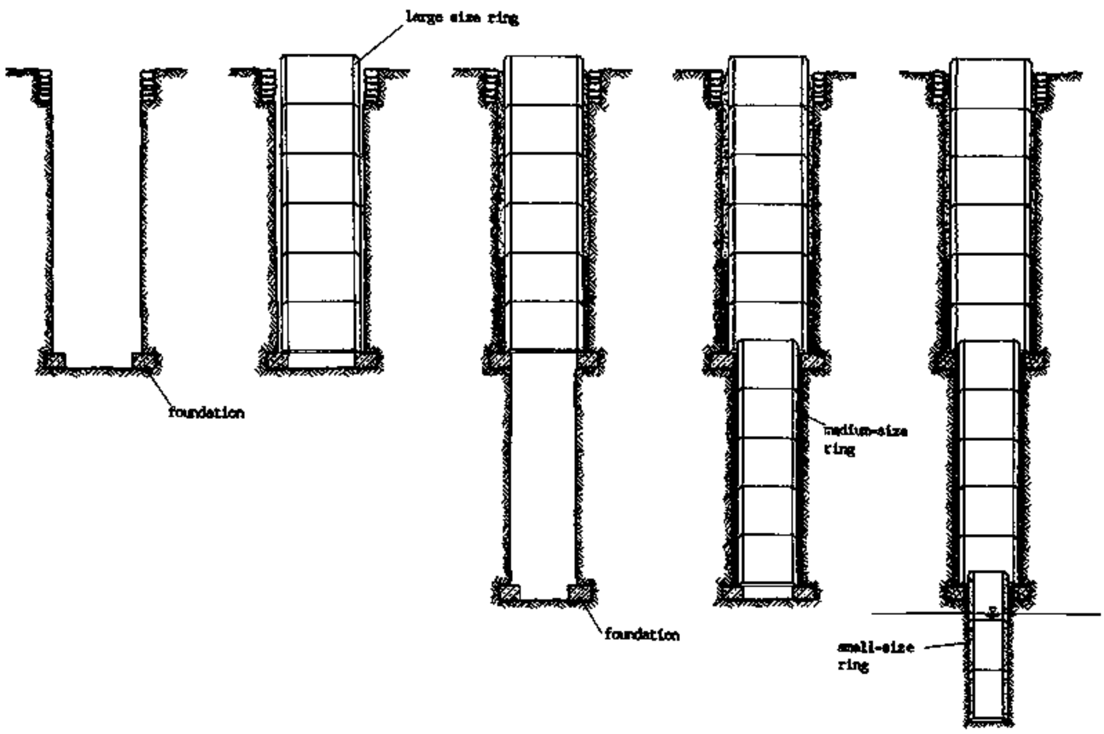

SCALE 1:80

7. Digging and Lining in Sections

For this method, follow these steps:

- Dig one section deep.

- Line the section with brick lining or concrete lining cast in situ (= concrete poured between an inside mould and the well wall).

- Dig the next section (The lining above is held by friction.).

- Line it.

- Continue like this to the well bottom below the water table <u>or</u> dig into the water table by caissoning concrete rings.

Drawing see next page.

This method is suitable in very unstable types of soil (e.g. sand). Sandy soil can be provisionally stabilized by making it wet. The length of a section depends on the type of soil and can vary between 50 cm and several metres. Digging in sections below the water table can be continued if the water inflow into the well is slow and it is easy to keep the well dry during construction. Otherwise, caissoning with concrete rings is advisable. The method is not very handy, but might be necessary under certain circumstances.

For more details see No. 17 in the bibliography.

8. Selecting the Suitable Construction Method

The selection of the suitable lining and construction method depends on

- the soil conditions,
- the depth of the well,
- the materials available,
- the equipment available,
- the skills available,
- the prices.

However, the first two are the really decisive factors. Carefully select the suitable method according to these criteria and the information given above.

Brick Lining in Sections:

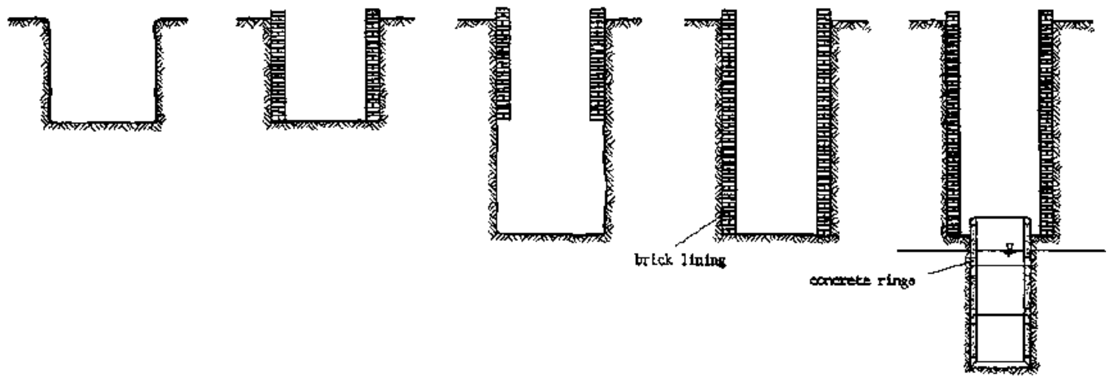

Concrete Lining in Sections

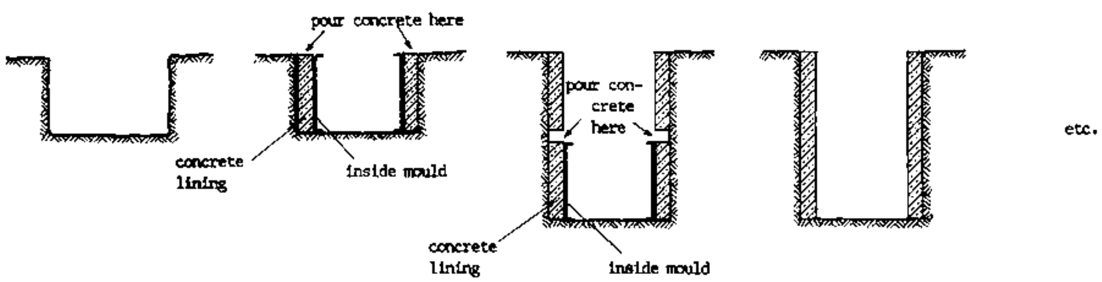

SCALE 1:80

8.15 Well Digging Techniques

A carefully dug well

- is exactly round,
- has the same diameter everywhere,
- has exactly vertical walls.

Careful and exact digging has the following advantages:

1. An exactly vertical and cylindrical well is more stable and is in less danger of collapsing.

2. No unnecessary extra material has to be dug out and pulled out of the well.

3. Lining or lowering concrete rings is easiest if the well is vertical and cylindrical.

4. No unnecessary material has to be backfilled.

A) <u>Digging without Lining</u>

The following techniques will help you to dig a straight well:

1. <u>Keeping the Measurements while Digging</u>

It is advisable to set pegs in concrete in the ground or into the collar before starting digging (see drawing below). Place a piece of timber with two holes on the pegs. Screw a hook into the middle of the timber to mark the well centre. Use two sets of wooden crosses while digging. First, dig roughly according to the short set; then trim the edges exactly according to the long set. Example for big size rings: Short set 1.30 m; long set 1.45 m.

Alternative:

Drive a peg in the centre of the well bottom. Turn a measuring rod around it. Measure the centre from the top with the plumb bob.

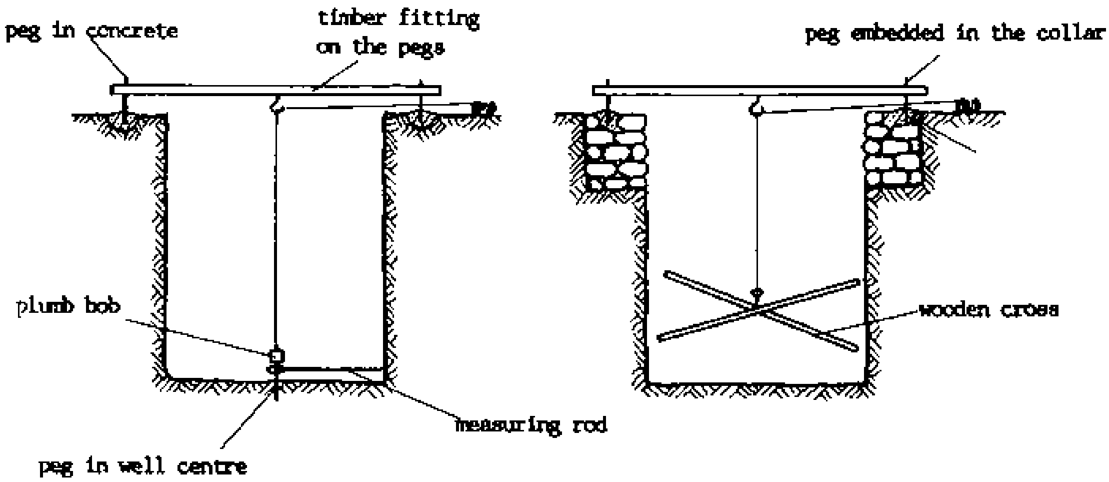

2. <u>Digging the Well Shaft</u>

When digging the well shaft, first roughly excavate a hole about 10 cm smaller than the diameter of the well and about 50 cm deep. In a second step, trim the walls to reach the exact diameter.

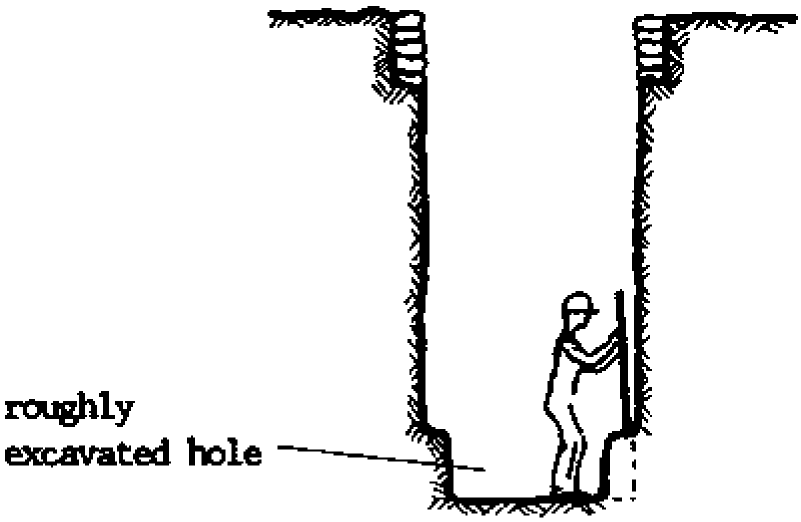

B) Digging with Concrete Rings

Digging inside concrete rings and allowing them to slide downwards during digging is called “sinking a caisson”. It is done according to the following technique:

1. Steps of Digging

First dig a rough hole inside the ring, about 10 cm smaller than the inside diameter of the ring. Dig it about 50 cm below the bottom edge of the ring. This can be done by unskilled labourers.

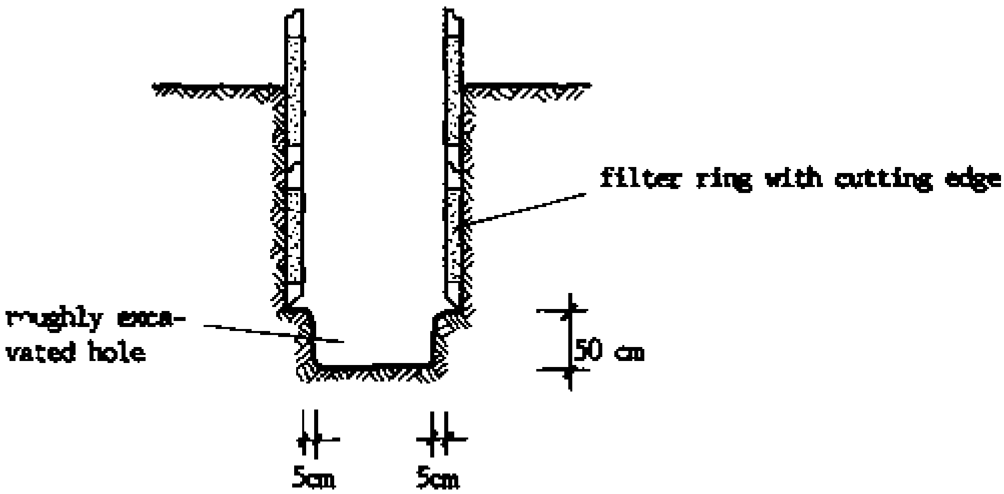

In a second step, cut back in layers all around to the outside diameter of the ring. However, do not start at one point and dig around clockwise, because this would cause the ring to sink askew.

Cut small pieces always opposite to each other in this order:

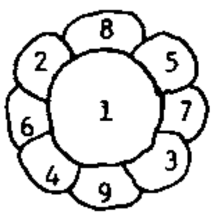

Do not cut much beyond the outside diameter of the ring.

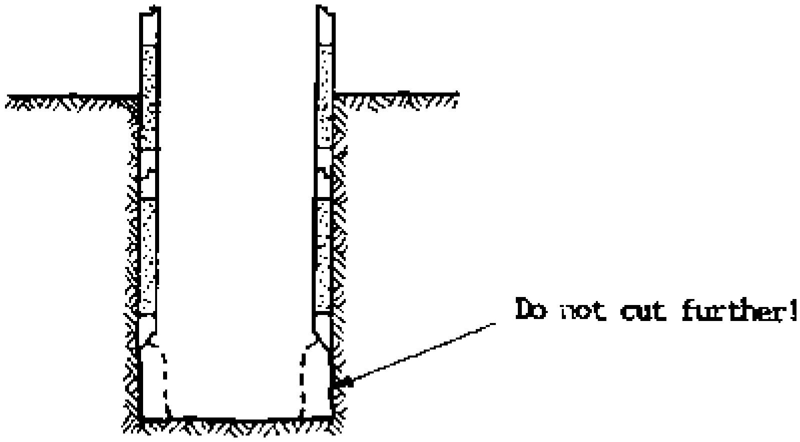

You can also cut like this:

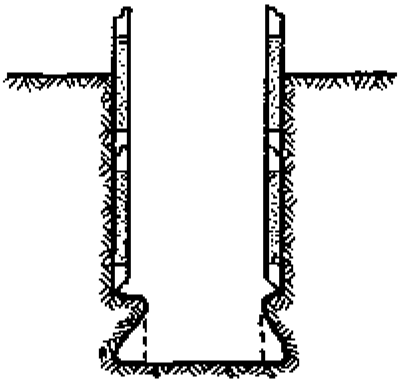

When the weight of the ring is greater than the friction, the ring will slide down the whole section. Before it slides, it announces itself by slight movement or a sound. Pay attention that your feet or hands or a tool are not underneath the edge of the ring.

2. Checking the Position of a Ring

Whether a ring is askew or not can be checked either by checking whether the ring-wall is plumb, or by checking whether the ring-top is level. We select the method according to the circumstances. Plumbing is suitable if the top of the ring is occupied by equipment (like a beam, sling, etc.; see 8.17/22) or if a column of several rings is to be checked. Levelling is suitable whenever the top of the ring is free. For reading spirit level and plumb bob see 6.4/9ff).

When using either method, always look first for the “neutral points” which lay opposite each other. The neutral points are where the spirit level or plumb bob are vertical along the ring wall. A long spirit level laid on top of the ring through the two neutral points is level. Mark the two neutral points with chalk or charcoal or mud. The lowest and the highest points lie in the middle of the two neutral points on opposite sides. A spirit level laid across the top of the ring through the lowest and the highest points shows the greatest slope.

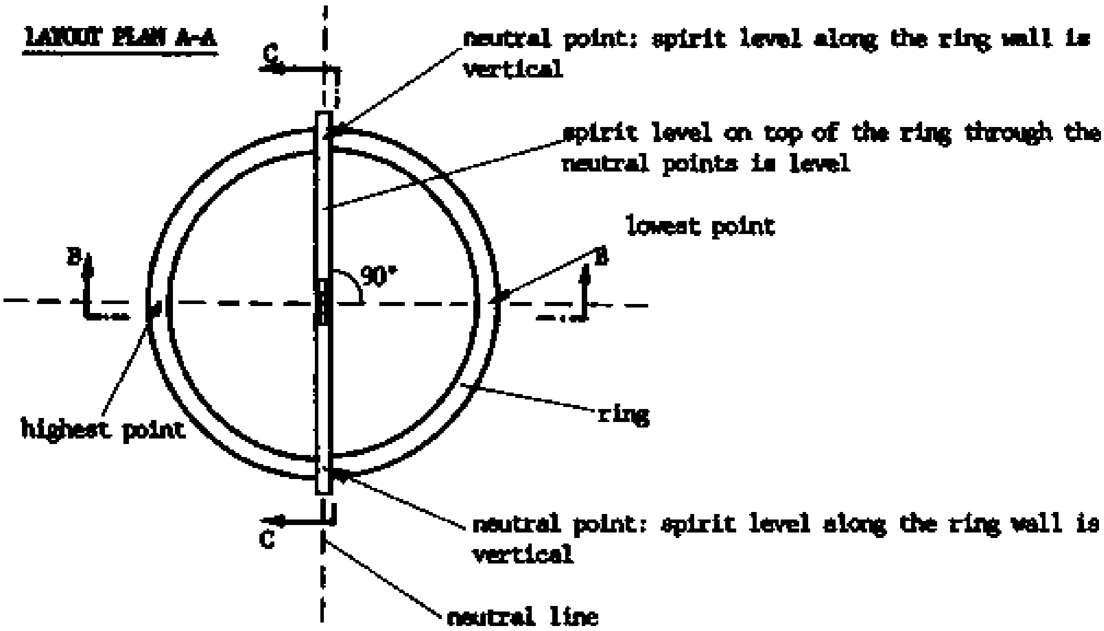

Check the distance d which indicates by how many cm (or "fingers") the spirit level is out of level:

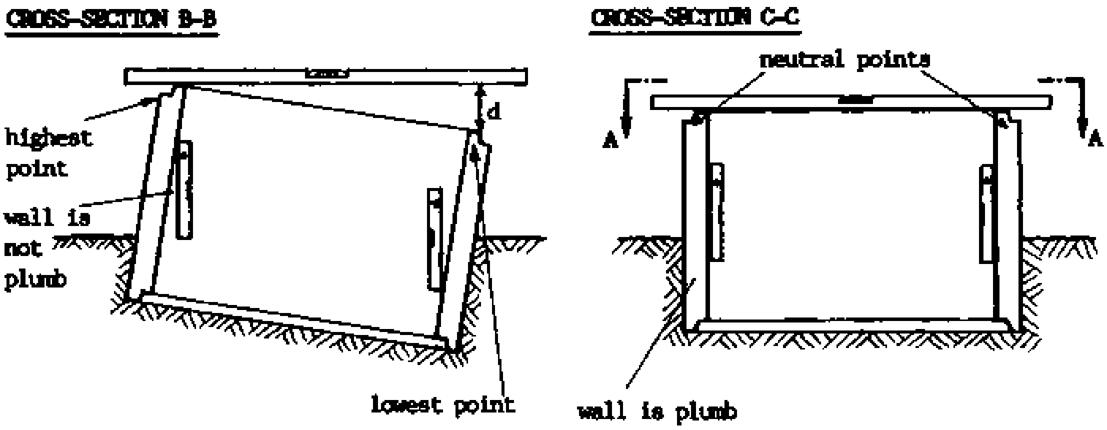

Mark the lowest point with a big arrow:

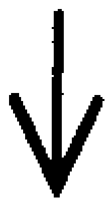

3. Straightening Askew Rings

When you know where the highest and the lowest points are, remove soil from beneath the lowest point (up to the neutral points). Dig underneath and beyond the outside edge of the ring. Then carefully dig soil away from underneath the highest point, but do not dig further out from the ring than necessary. Such rings can gradually sink again into vertical position. This is the case if the spirit level is vertical all around the ring.

Alternatively, you can check it with the plumb bob.

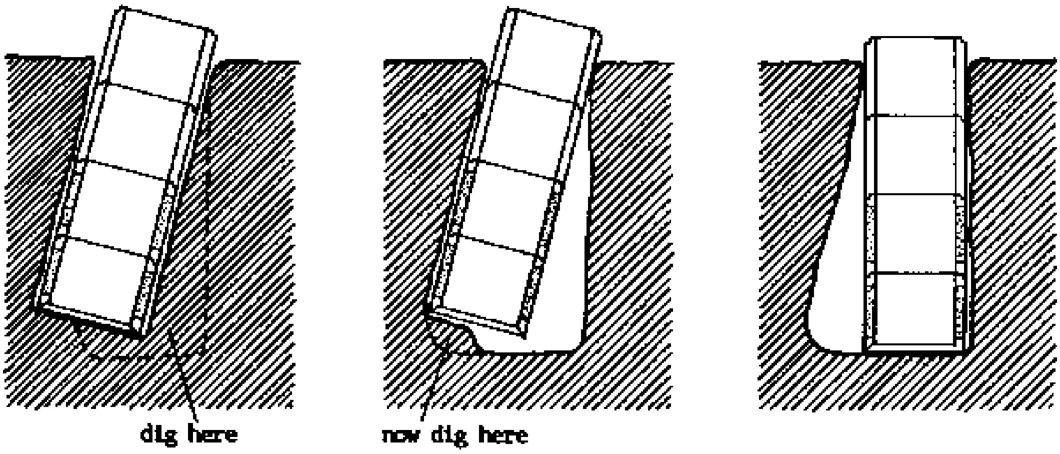

C) Possible Complications during Digging

Different complications can occur while digging a well. Two common ones are described in the following.

1. Rock

The appearance of rock makes digging much more difficult. There are different possibilities how to continue:

- to continue digging with heavy crowbars and drastically reduced speed;

- to leave the site and start new;

- to use more sophisticated methods like a compressor or blasting with dynamite; these need special skills.

2. Quicksand

Water and sand entering the well in great speed is called quicksand. It is very dangerous because it can hold your feet so that you are unable to pull them out. Additionally, it can fill the well quickly or/and cause collapsing of the surrounding area. If you encounter quicksand, leave the well immediately and remove all tools. It might be necessary to leave the site and dig a new well nearby, planned in such a way as to caisson through the sandy layer as quick as possible. Never enter a well with quicksand without safety belt and rope connection to the top.

8.16 Manufacturing Concrete Rings

Lining wells with ready made concrete rings has the following advantages:

1. It is very stable.
2. It protects the diggers while “caissoning” into the groundwater.
3. It is thin and, therefore, requires less excavation.
4. The rings are easily prefabricated outside the well.
5. Finishing the well (i.e. lowering the rings) can be completed within short time.
6. Less cement is needed than for other lining like brick lining or stone lining.

The Disadvantages are:

1. Moulds and other equipment are needed for casting the rings.
2. Special equipment is needed for lowering the rings.
3. Skilled labour is necessary for lowering and caissoning.

A) Types of Concrete Rings

The following three types of concrete rings are needed to construct ordinary wells:

1. Fully Concrete Ring

- rebate on top and in bottom
- to be used in well shaft above water table
- prevents water from entering the well

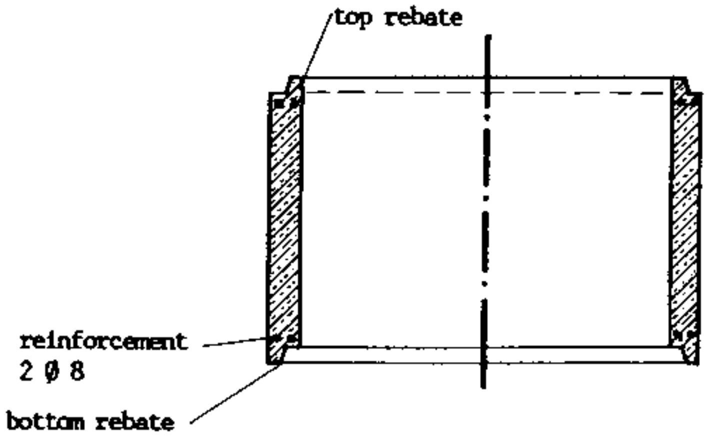

2. Filter Ring

- rebate on top and in bottom
- to be used in well shaft under the water table
- allows water to enter the well

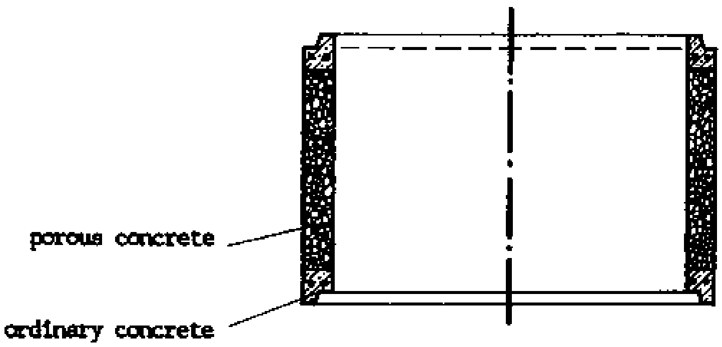

3. Filter Ring with Cutting Edge

- rebate on top, cutting edge in bottom
- to be used as the first ring in the well
- allows water to enter the well
- cutting edge makes digging easier

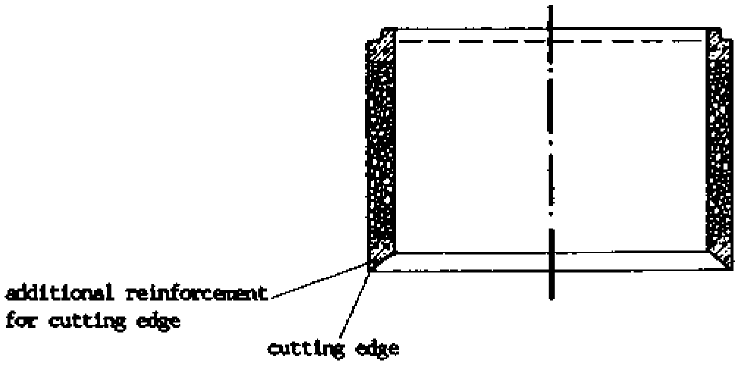

B) Application of the Different Ring Types

The different types of rings are to be utilised in a well as follows:

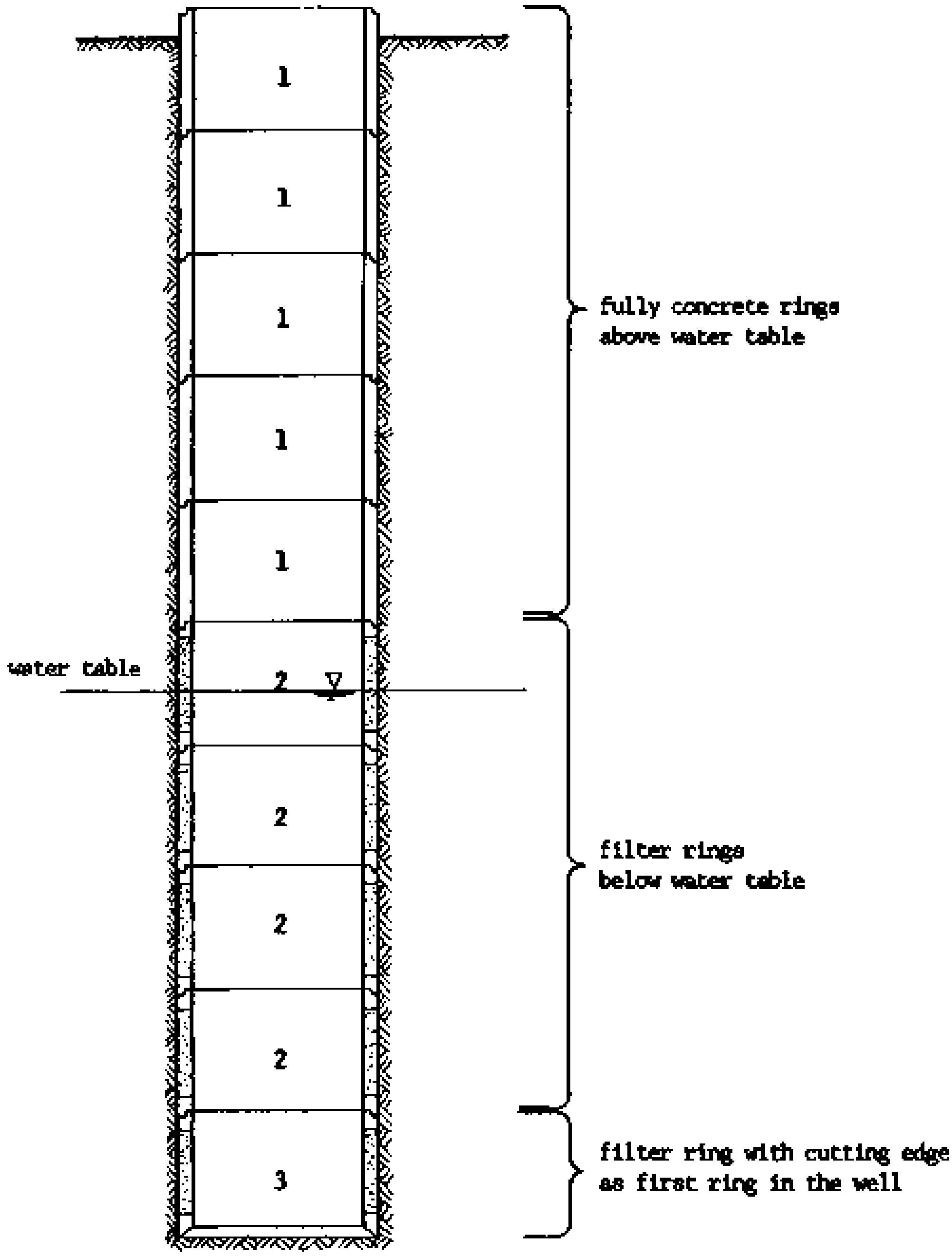

SCALE 1:50

The rings have rebates on the top and in the bottom edges. A rebate is a step-shaped channel along the edge of the ring to receive the corresponding edge of another ring. On the top edge of the ring, the channel is outside. This corresponds to the bottom edge of another ring where the channel lies inside.

The rings have to be stacked on top of each other in such a way that no surface water can enter the well through the rebates. They have to slope outwards. The moulds described in D) produce rings which can only be stacked in the correct way if the first ring in the well is one with a cutting edge.

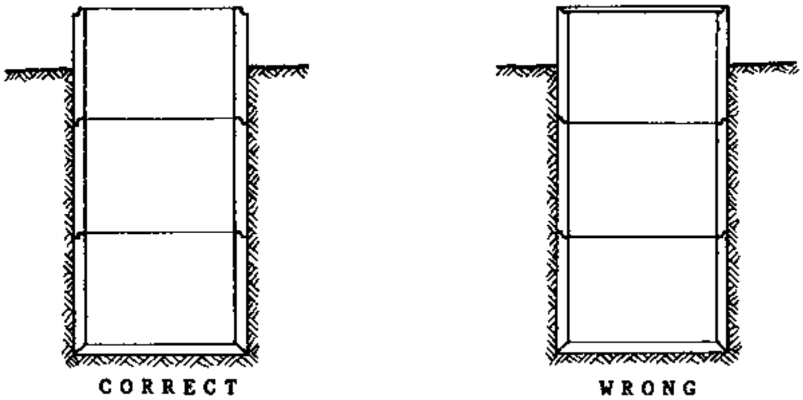

The filter rings below the water table are just stacked on top of each other without mortar. The rebates provide the connection. The fully concrete rings above the water table are connected with cement mortar to make a watertight joint.

C) <u>Sizes of Concrete Rings</u>

It is advisable in a project to have moulds of different sizes for different purposes. The dimensions should be chosen in such a way that the next smaller ring can be used inside a previous ring when deepening the well becomes necessary later on. This is called "telescoping"(see also 8.14/7f).

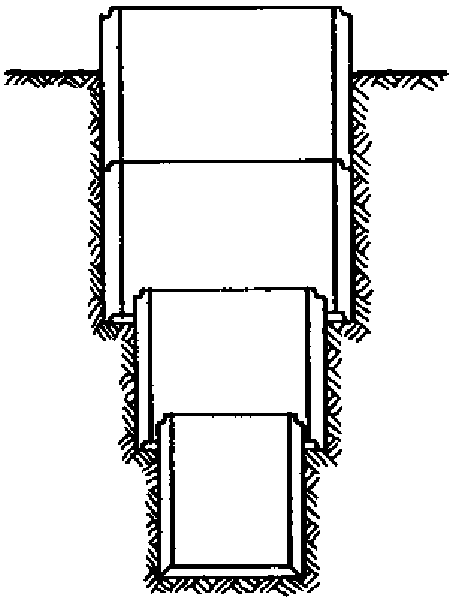

SCALE 1:50

The advisable height of the concrete rings depends on the equipment available for lowering them into the well. Rings 50-60 cm high are light and, therefore, can be lowered with light weight equipment. Small rings also cause fewer problems during transportation if manufactured in a central workshop. But they require more reinforcement. The work progress during lowering is slower and more joints need to be constructed. For very deep wells small rings are not advisable.

Concrete rings 90-100 cm high are heavy and require strong, more expensive and heavier lowering equipment. If this equipment is available, high concrete rings are preferable, because of the easy manufacturing process and quicker work progress during lowering. If rings are to be manufactured on site, this height is advantageous. Rings higher than 100 cm are not advisable at all.

The thickness of the wall of a concrete ring should be between 6 and 10 cm, depending on the diameter of the ring. A wall thinner than 6 cm cannot accomodate the reinforcement properly and will break easily; a wall thicker than 10 cm makes the ring too heavy without adding to the strength accordingly and is, therefore, a waste of material.

The following sizes for concrete rings are suggested for a water project:

(All rings are 0.92 cm high.)

1. <u>Large Size:</u>

- big water reservoir can store large quantities of water
- more digging is necessary
- 2 or 3 people can dig in the ring at the same time
- it is suitable in soft soil and if the water table is not too deep

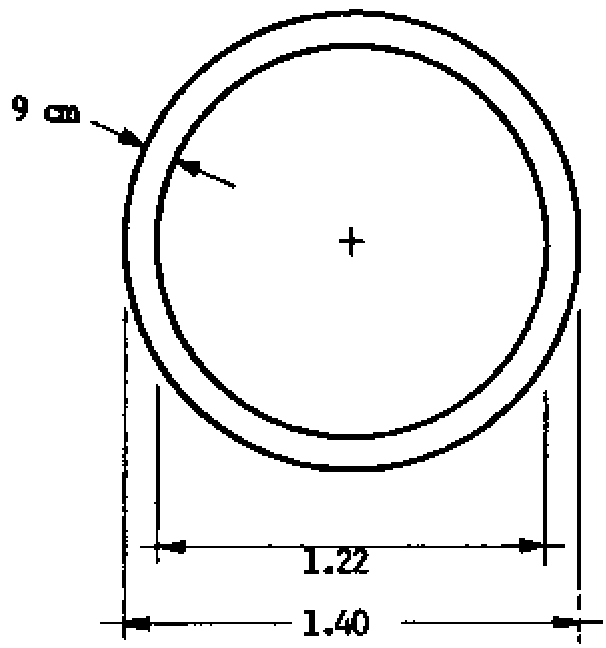

2. <u>Medium Size:</u>

- a moderate water reservoir
- less digging is necessary
- 1 to 2 people can dig in the ring at the same time
- usually used
- suitable also in deep wells and in rock
- suitable for telescoping within a large ring

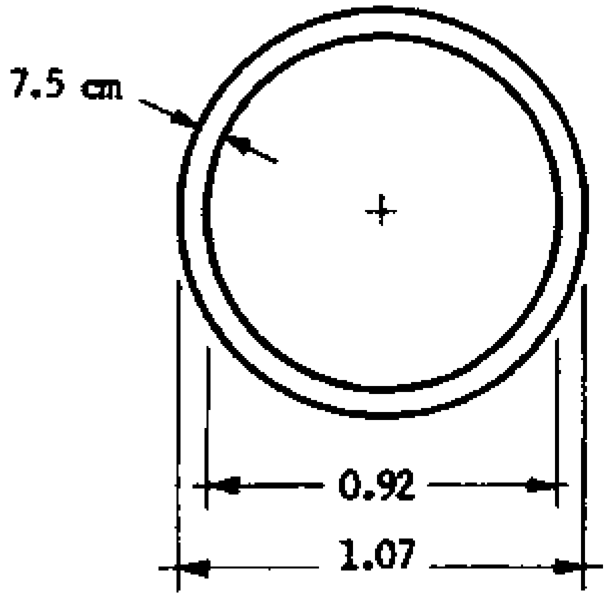

3. Small Size:

- small water reservoir
- little digging is necessary, but digging is difficult due to little space
- only one person can dig in the ring
- suitable only in special cases
- suitable for telescoping within a middle size ring

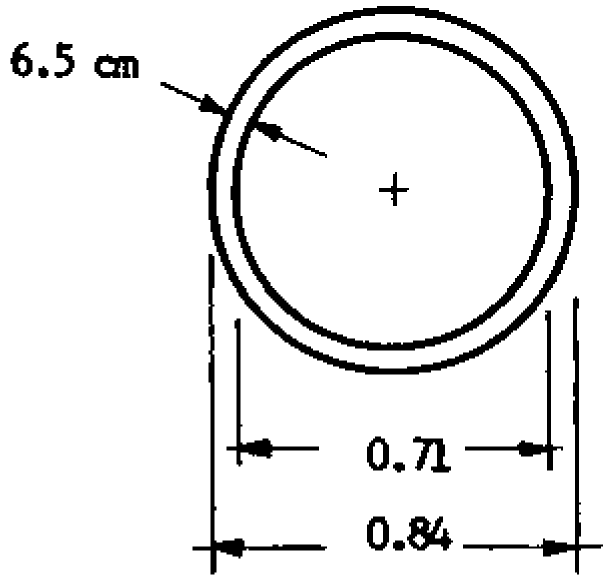

SCALE 1:30

D) Pipe Moulds

Pipe moulds are steel forms for casting concrete rings. They are very durable, can last for a long time, and produce rings which always have the same size and shape. However, they need to be handled with great care.

Pipe moulds consist of the following parts:

1. Inner Mould (with two pieces and wedge)

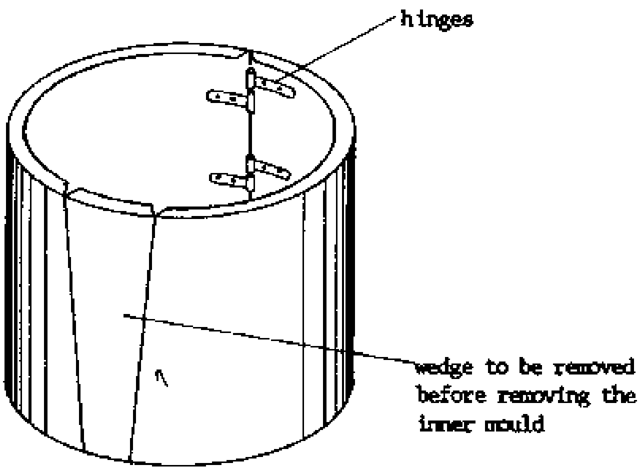

Inner mould without wedge:

LAYOUT PLAN:

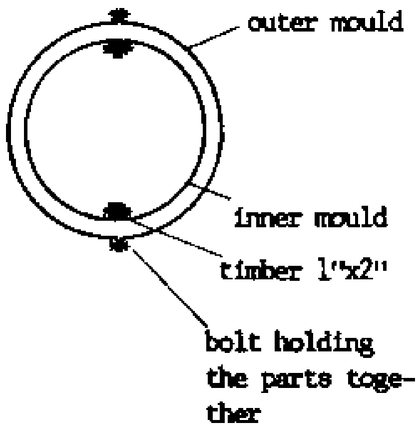

If the inner mould has no wedge, but consists of two pieces similar to the outer mould, you <u>must</u> place a piece of timber 1”×2” in between the parts of the inner moulds. Otherwise, you will not be able to remove the inner mould after casting the ring without breakage.

2. <u>Outer Mould (two pieces)</u>

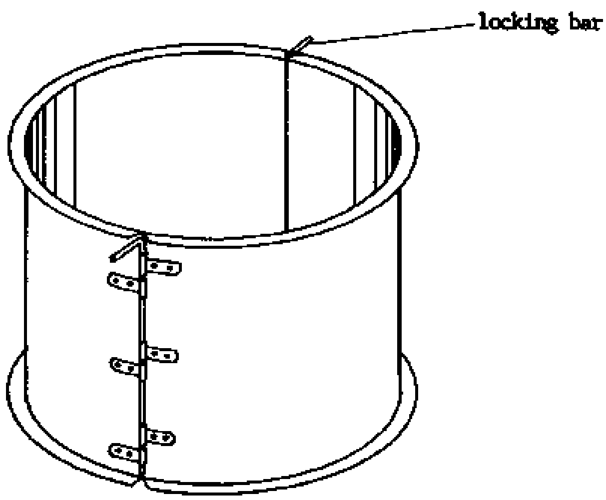

design: Harrtz & Bell, Nairobi

SCALE 1:25

3. Base Plate for Rebate

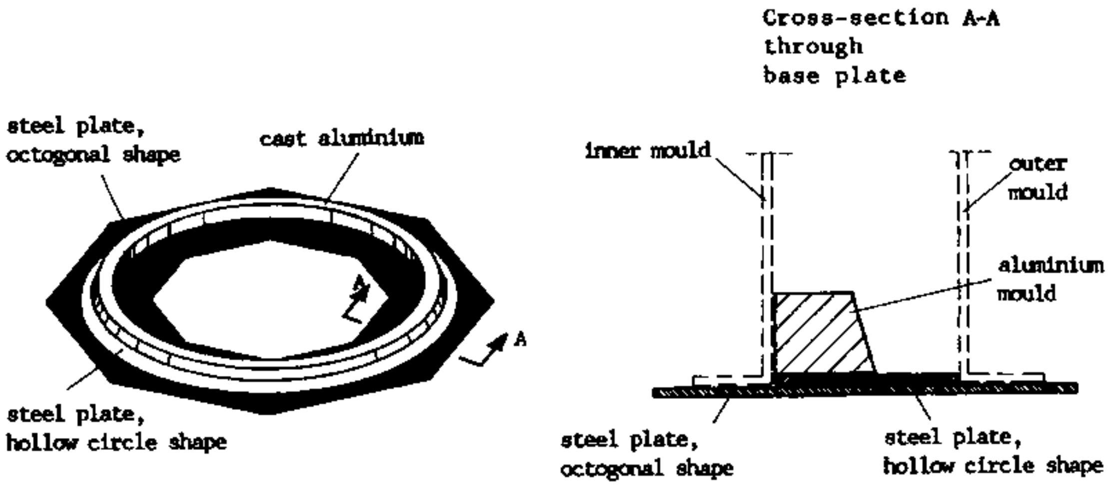

4. Base Plate for Cutting Edge

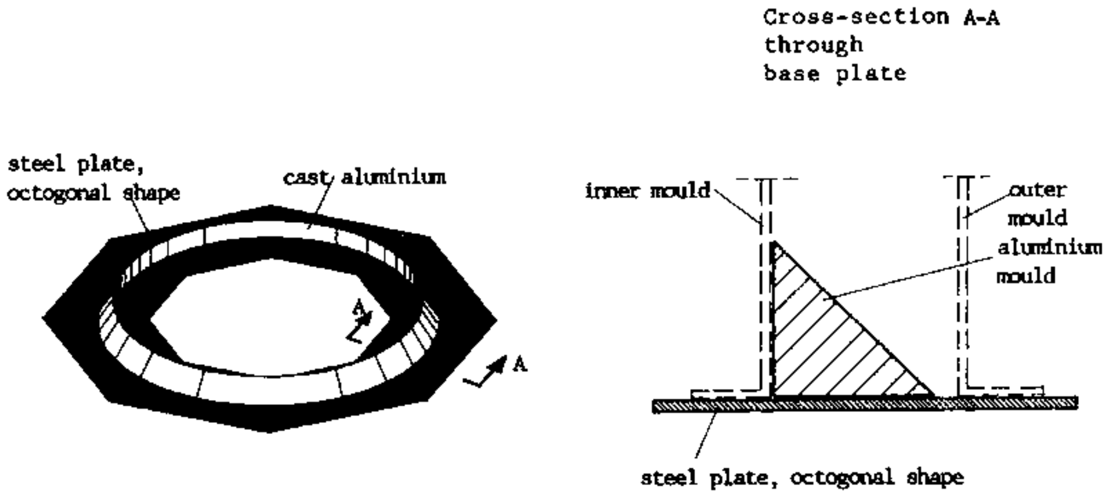

5. Cutting Cross (for cutting rebate on the top of the ring)

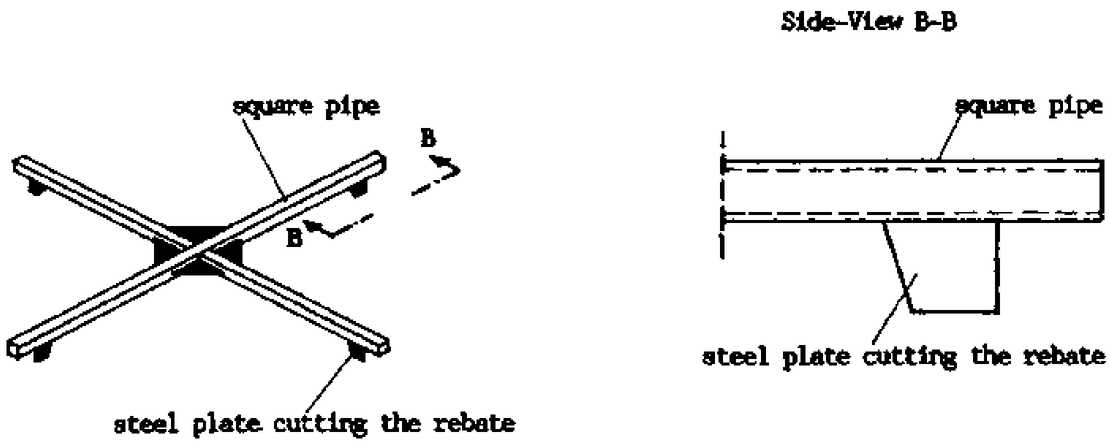

E) Casting Concrete Rings

Manufacture concrete rings according to the following steps:

No.	Step	Reasons
1	Load and unload the moulds very care fully. Avoid dropping them and bending them out of shape.	Out-of-shape moulds produce rings which are not round. They do not fit into each other when lowered into the well.
2	Place the base plate on level, clean ground.	This ensures easy compaction and minimizes movement.
3	Place the inner mould inside the base plate. Check if the wedge can be pulled out easily; otherwise, clean and grease it. Check if the mould can be easily hinged inwards.	After concrete is cast, the moulds are much more difficult to move.
4	Bend the reinforcement around the mould; cut it and tie it using the appropriate diameter:	The reinforcement should never touch the moulds but be well covered by concrete from all sides. Concrete prevents steel from corroding. See 6.6/8ff.
	One reinforcement in one layer for rings Ø 1.07 m: 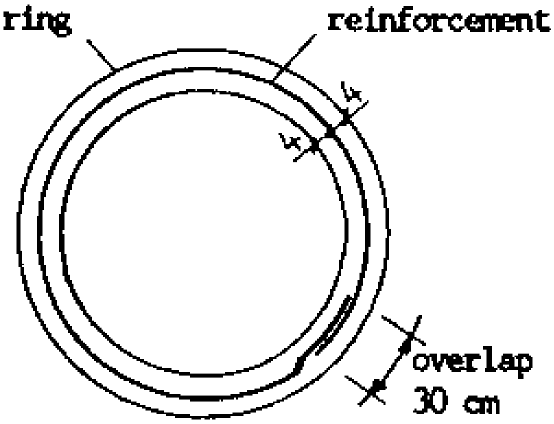	Two reinforcements in one layer for rings Ø 1.40 m: 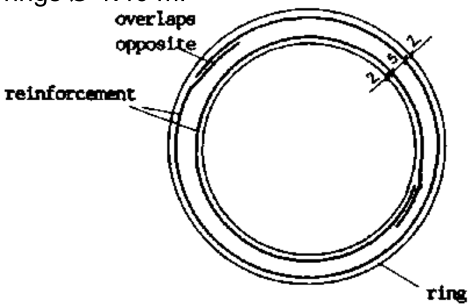
5	Take the reinforcement out.	It will be needed later on.
6	Paint the base plate, the inner mould (outside), and the outer mould (inside) with old engine oil.	Engine oil prevents the concrete from sticking to the steel mould (like oil when baking bread).
7	Place the outer moulds and connect them with locking bars. Check if the mould is in correct position all around. 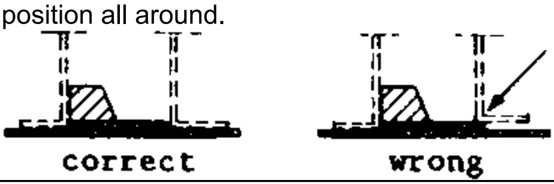	The correct position on the base plate assures that the mould is really in a round shape. It should not sit on the hollow circle shaped steel plate.
8	Place the cutting cross on the mould and check if you can easily turn it.	The round shape of the mould can be checked with the cutting cross.
9	Wash the gravel if necessary.	Soil particles make the concrete weaker. See 6.6/7.
10	Sieve the gravel if necessary.	The biggest parts shall not exceed 20 mm diameter.
11	Mix the concrete thoroughly. For mixtures see F). Mix cement and sand dry. Then add water and mix thoroughly. Add as little water as possible. Add gravel, and mix thoroughly. The water content is correct if the concrete is just workable for pouring and compacting. The concrete should look dry. If compacted a little, water needs to appear on the surface.	Only a well mixed concrete is strong. The cement needs to be evenly distributed inside the concrete. The concrete is weaker if there is too much water in it. See 6.6/7

No.	Step	Reasons
12	Pour a little concrete into the mould evenly all around. Compact it with wooden stampers. 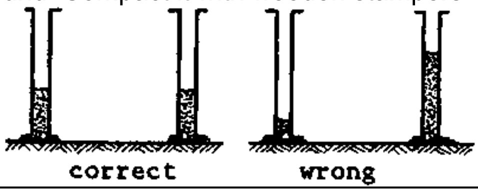	This ensures that the concrete is compacted evenly. All air bubbles need to be removed, because they make the concrete weaker.
13	Fill to about 10 cm high all around. Place the reinforcement. Take care that the reinforcement does not touch the moulds.	The top and bottom reinforcement prevent the rings from breaking.
14	Fill the mould, layer by layer, and compact each layer.	The ring must be well compacted throughout for high strength.
15	When the mould is filled 80 cm high, place the reinforcement.	see No. 13
16	Fill the rest of the mould. Compact it well. Cut the top rebate with the cutting cross. Remove the surplus concrete.	The top and bottom rebates are corresponding and ensure a strong connection between the rings.
17	Fill in some cement mortar 1:4. Cut again with the cutting cross.	The rebate becomes smoother if cement mortar is used.
18	Write the date into the fresh concrete.	If the date is recorded, you know if the ring is hard enough for lowering. See 6.6/6f
19	Wash away all concrete spilled outside on the moulds.	Otherwise the concrete will get hard on the mould. It will be difficult to clean it later. Old concrete makes the mould heavier.
20	Cover the mould.	Fresh concrete becomes stronger if kept wet (= cured).
21	Remove the moulds (without the base plate) 3 hours after casting at the earliest. Lift the wedge of the inner mould. Hinge the inner mould inwards and carefully remove it. Open the outer moulds and remove them. Clean the moulds immediately.	Take care not to damage the fresh concrete. The outer mould still protects the ring when removing the inner mould first. The concrete is of good quality if the surface is smooth without air bubbles. It is easier to clean the moulds immediately when they are still wet.
22	Cover the ring with wet sackcloth and nylon (or wet grass). Or water it continuously. Keep it wet for at least 3 days, better for 7 days.	Curing the concrete by keeping it wet prevents cracks and makes it strong.
23	Remove the base plate after 2 days (48 hours) at the earliest. Place a “cushion” of sand beside the ring. Pull the ring over on its side by a sling. Remove the base plate. Clean it. Let the ring down again. Cover the ring again.	If 48 hours have not yet passed, the rebate is not hard enough and could easily be damaged. If you pull over the ring before time, it would crack or break.
	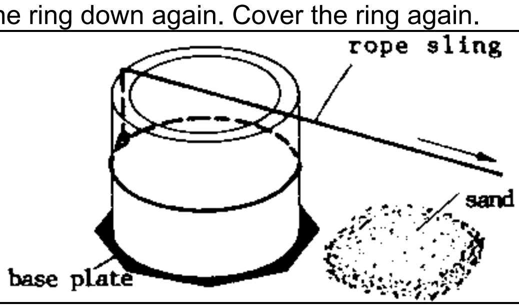	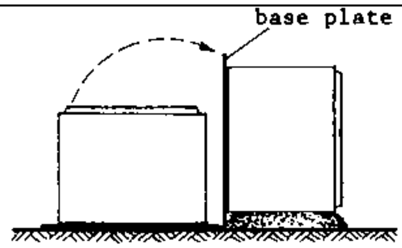
24	After three to four weeks the rings are hard enough to be lowered into a well.	To lower them before is a danger to the workers and can cause heavy losses of time and material. See 6.6/6f.

F) Mixtures and Reinforcement

Use a strong mixture of 1:3:4 for fully concrete rings to compensate for ingredients of variable quality and mistakes in work. Even if cement is very expensive, the safety of the workers is much more important than minimizing cement costs. Breaking of rings at any stage (during moving, lowering or digging) can easily cause bad injuries.

The same mixture 1:3:4 is used for the bottom and the top of filter rings. Together with the reinforcement this gives strength to the filter ring. In spite of that, the filter ring is weaker than the fully concrete ring and, therefore, needs to be handled with even more care. The filter part consists of a mixture 1:0:4 (one part cement, no sand, four parts gravel). The voids between the gravel make the concrete porous and allow the water to enter through the filter ring. Alternatively, a mixture of 1:1:4 could be used. When mixing concrete for the filter part, mix the cement with water first and add the gravel afterwards.

For medium size rings, 2 reinforcement rods, 0 8 mm, all around the ring, one in the bottom, one on the top, are sufficient, both for fully concrete and for filter rings. Add another ring of reinforcement in the cutting edge.

If reinforcement is not available, it can be substituted by one layer of chicken wire all around the ring. This is only possible for fully concrete rings; it also makes compacting more difficult.

To substitute the reinforcement by welded mesh all around the ring is very expensive. Alternatively, you can cut 2 stripes of welded mesh:

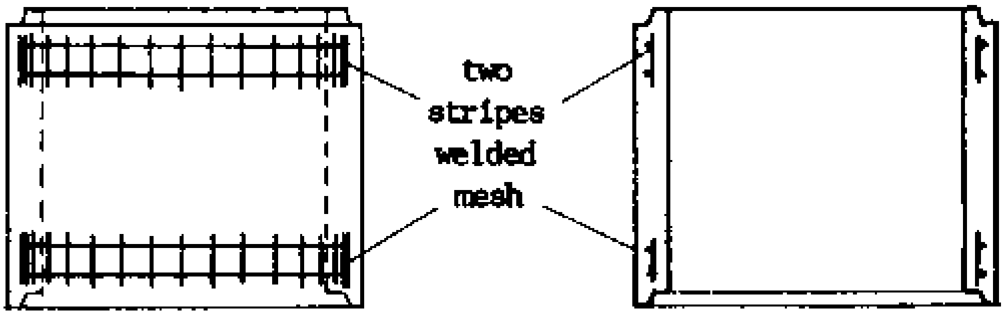

Middle size rings might also be manufactured without any reinforcement at all (only fully concrete rings!), although it is not advisable. In that case, the mixture must be stronger, the curing must be continuous for seven days, and rolling the ring is very delicate. Casting rings without reinforcement should only happen in emergencies. You run the great risk of loosing the whole cement through breakage of the ring.

For large size rings, 4 reinforcement rods, Ø 8 mm, are necessary, 2 in the top, 2 in the bottom. Add another reinforcement in the cutting edge. The reinforcement can be substituted by <u>2</u> layers of chicken wire or 1 layer of welded mesh all around the ring. Large size rings cannot be manufactured without reinforcement.

The above instructions are valid only for rings which are to be turned over, rolled and lowered into a well. Rings cast in situ (on the site), for example for water tanks, which are never to be moved, can be cast without reinforcement. See also 6.6/10.

On the other hand, rings to be used as culverts (= channel carrying water under a road) need much stronger reinforcement. They have to bear the load of cars and lorries driving over them. The reinforcement depends on the type of cars using that road and the thickness of soil between the culvert and the road. The reinforcement must be at least one layer of welded mesh, but could be as much as 1 reinforcement 0 10 mm every 10 cm. See also 6.6/10.

Mixtures, approximate quantities and reinforcement for well rings are compiled in the following table:

Ring Size	Type of Ring		Mixture	Cement Buckets	Sand Buckets	Gravel Buckets	Reinforcement Rings
Ø 1.40	fully concrete ring		1:3:4	5	15	20	4 Ø 8
	filter ring,	top and bottom	1:3:4	1	3	4	4 Ø 8
		filter part	1:0:4	5	0	20	- -
	filter ring with cutting edge	top and bottom	1:3:4	1	3	4	5 Ø 8
		filter part	1:0:4	5	0	20	- -
Ø 1.07	fully concrete ring		1:3:4	3	9	12	2 Ø 8
	filter ring	top and bottom	1:3:4	$\frac{1}{2}$	$1\frac{1}{2}$	2	2 Ø 8
		filter part	1:0:4	3	0	12	- -
	filter ring with cutting edge	top and bottom	1:3:4	$\frac{1}{2}$	$1\frac{1}{2}$	2	3 Ø 8
		filter part	1:0:4	3	0	12	- -

1 bucket is about 10 lit. 1 bag of cement is about $3\frac{1}{4}$ buckets.

8.17 Lowering Concrete Rings into a Well

Concrete rings are heavy; the middle size weighs about 540 kg, the large size weighs about 940 kg. Lowering them into a well is a delicate work and requires skilled technicians and reliable equipment. See also 5.7.

A) Methods of Holding a Concrete Ring

Concrete rings can be held for lifting and lowering by different methods:

1. Tying the Ring with Rope

Step-by-step procedures:

- Sling a rope underneath the ring and tie it around the ring walls.
- Do this on 3 or 4 spots around the ring.
- Lift the ring.

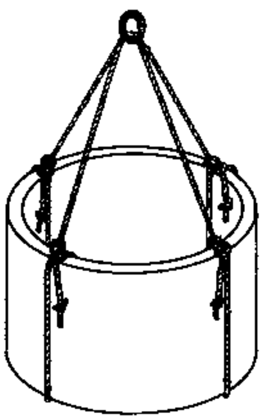

Advantages:

- Nothing else other than rope is needed.

Disadvantages:

- The method is not very handy.
- The ropes wear out very quickly.
- The ropes are difficult to remove once the ring is placed on top of another ring.
- It is not easy to balance the rings horizontally.

2. Tying to Hooks in the Ring

Step-by-step procedures:

- Tie 3 or 4 hooks made from steel Ø 10 mm to the reinforcement before pouring the concrete into the ring moulds.

- Cast the hooks into the concrete.

- When you want to lower the rings into a well, tie ropes to the hooks.

- Lift the ring.

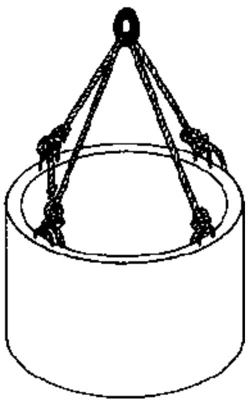

Advantages:

- The connection is strong.

Disadvantages:

- Extra work is needed when casting the rings.

- Rebates are not possible.

- The next following ring will not sit properly on the previous one because of the hooks. More mortar is necessary.

- If the hooks are to be bent inwards after lowering, the concrete can break easily.

3. Holding by Steel Hooks

Step-by-step procedures:

- Manufacture three steel hooks from reinforcement Ø 20 mm.

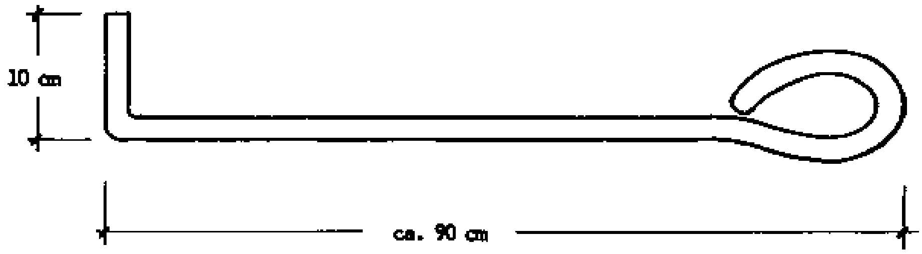

- Grasp the bottom edge of the ring with the three hooks.

- Tie the eyes of the hooks together and lift them at a go.

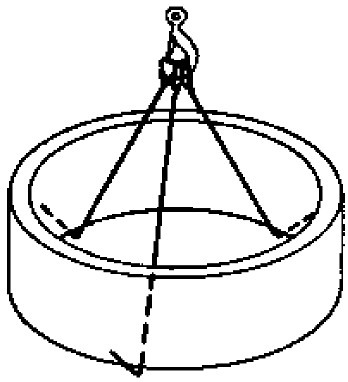

Advantages:

- The equipment is simple and can be manufactured locally.
- The method is relatively handy.
- Little space is needed outside the ring.
- No hooks have to be cast into the concrete.

Disadvantages:

- The method is only suitable for small, light weight rings (up to Ø 1.10 m and 60 cm height).

- It is difficult to balance the ring during lowering.

- The bottom rebates can be easily damaged by the hooks.

- It is difficult to get the hooks out, once the ring is placed on top of another.

- There is little working space for the technician on top of the ring.

4. <u>Holding by Steel Cable</u>

Step-by-step procedures:

- Prepare a strong hook from double flat iron, 60 x 8 mm, (or from car springs) by blacksmithing and welding.

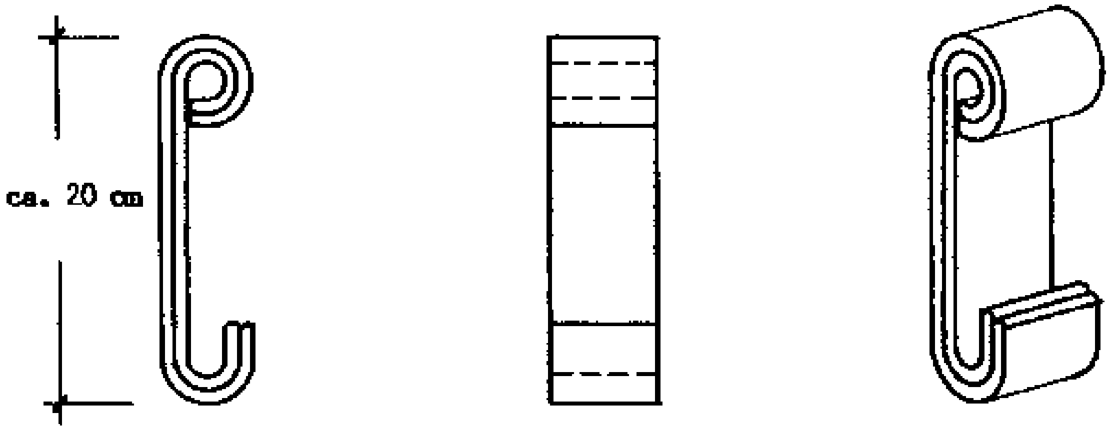

- Prepare a steel cable with an "eye" on one end and the hook from flat iron on the other as follows:

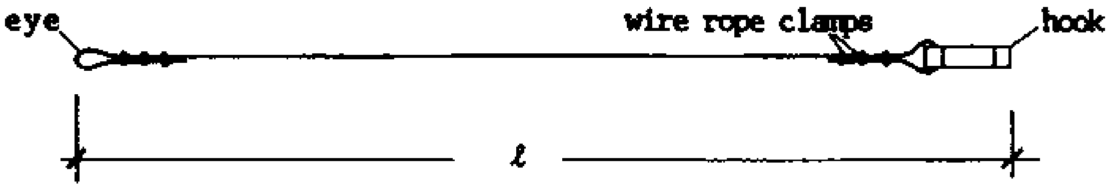

The total length (including the hook and the eye) should be about

$$\ell = h + \pi \times D + 1.41 \times D = h + 4.55 \times D$$

h = height of concrete ring
D = diameter of concrete ring
π = 3.14

Cut the steel cable. Weld its ends by gas welding to prevent splitting and injury to people. Fix the hook and the eye, each with two wire rope clamps.

- Prepare a piece of timber 2" x 4". The length should be:

$$\ell = D + 3\,\text{cm}$$

Cut a slight groove into its ends and reinforce it with iron band as shown:

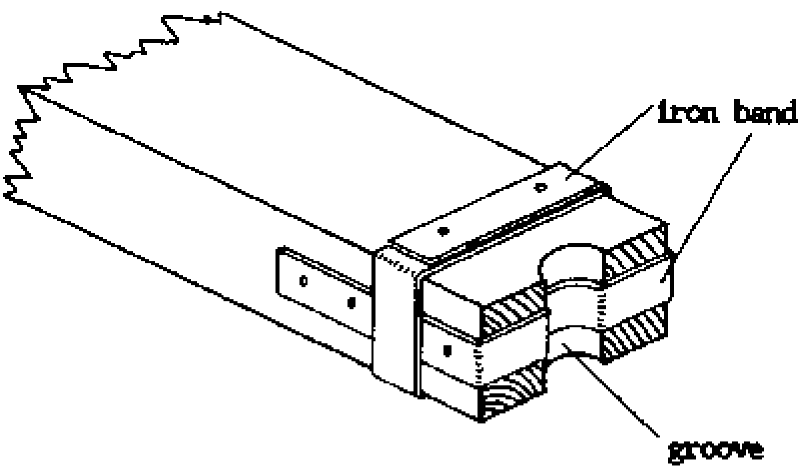

- Once the steel cable and the piece of timber (= "beam") are made, they can be used many times.

- Fix the steel cable with the beam around the ring like this:

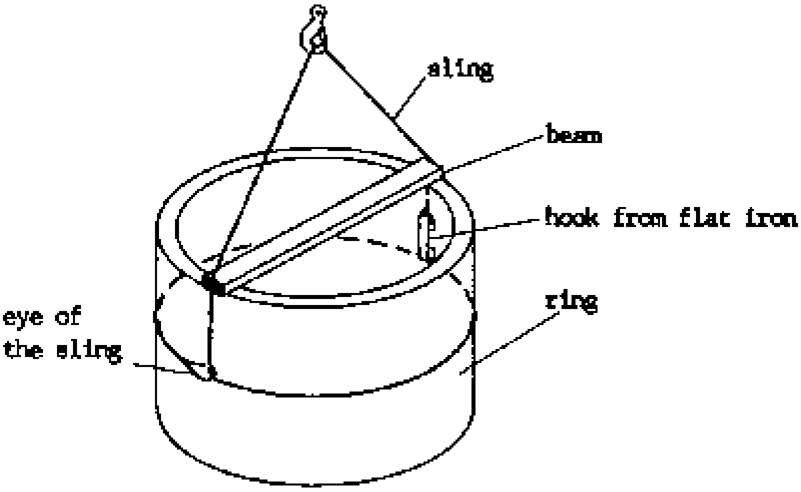

The beam prevents the cable from cutting and damaging the concrete. The cable should be at the middle of the ring or below.

- Lift the ring with a swivel-hook. The sling is able to lift the heavy concrete ring through friction between cable and concrete.

- If not balanced, put down the ring again and move the swivel-hook accordingly until the ring is balanced.

Advantages:

- The equipment can be produced locally.

- No hooks have to be cast into the concrete.

- Any type of ring can be lifted, with or without rebates.

- The ring is held in the middle and all around.

- The method is very handy, quick and safe.

- The rings are easily balanced and directed during lowering.

- Only little space is occupied outside the ring.

- There is nothing underneath the ring; the ring can be placed directly on top of another ring.

- There is enough working space for the technician on top of the ring.

- The equipment is long lasting.

Disadvantages:

- Steel cable and iron hook are needed.

(In emergency cases triple rope can be used instead of steel cable.)

5. Holding by Self-Locking Lifting Clamps

Special lifting clamps are industrially available for lifting concrete rings. They consist of three clamps attached to chains. When pulling the chains, the clamps automatically tighten and hold the ring by friction. They are “self-locking” when pulled.

Step-by-step procedures:

- Place the three clamps on the ring at equal distances.
- Lift the ring by the chain.

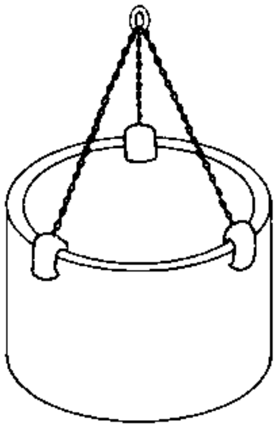

Advantages:

- The method is very handy and quick.
- Any type of ring can be lifted.
- The rings are easily balanced.
- There is nothing underneath the ring.

Disadvantages:

- The special lifting device is not easily available and cannot be produced locally.

- The clamps require space outside the ring.

- The ring is held only on three small spots; if the concrete is of weak quality, it can break and the method is not safe.

- There is little working space for the technician on top of the ring.

6. <u>Selecting the Suitable Method</u>

The selection of the suitable method depends on the circumstances and the equipment available. whenever possible it is advisable to use method No. 4.

B) <u>Methods of Lowering a Concrete Ring into a Well</u>

Concrete rings can be lowered into a well by different methods:

1. <u>Lowering with Local Equipment</u>

The equipment necessary for this method should be available locally and/or within the country.

Step-by-step procedures: see also drawing 6.17/9

- Erect 4 strong Y-shaped poles (“shebas”) around the well and fix them in concrete.

- Lay 2 strong metal pipes, Ø 2½, or strong poles, across them and tie them to the shebas.

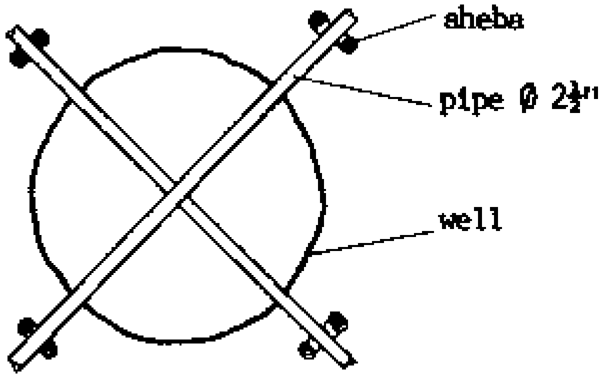

- Lay three strong, long poles, or pipes Ø 2½, across the mouth of the well.

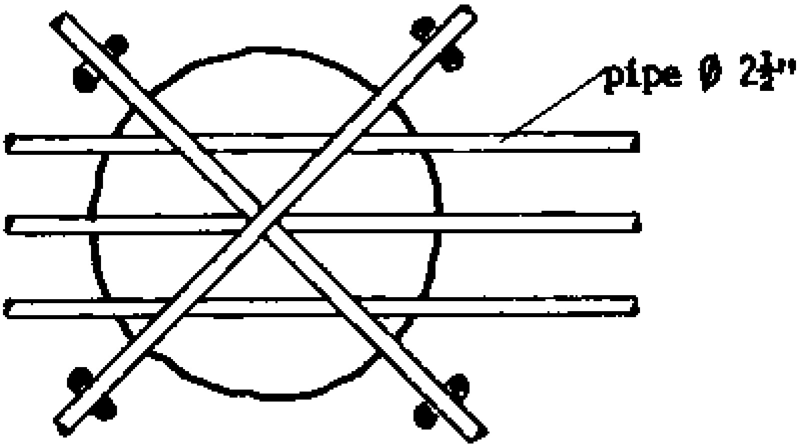

- Place the ring on top of these poles or pipes outside the well mouth.

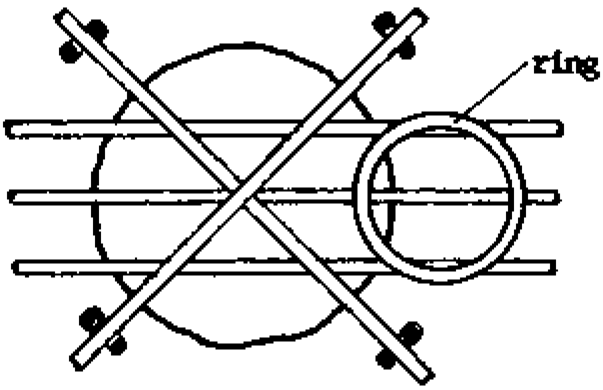

- Tie four pulleys on the crossing pipes.

- Pull four long sisal ropes Ø 25 mm through the four pulleys.

- Tie the ring with the four ropes by method 1 or 2 as described under A).

- Let about 8 to 10 people pull at <u>each</u> rope.

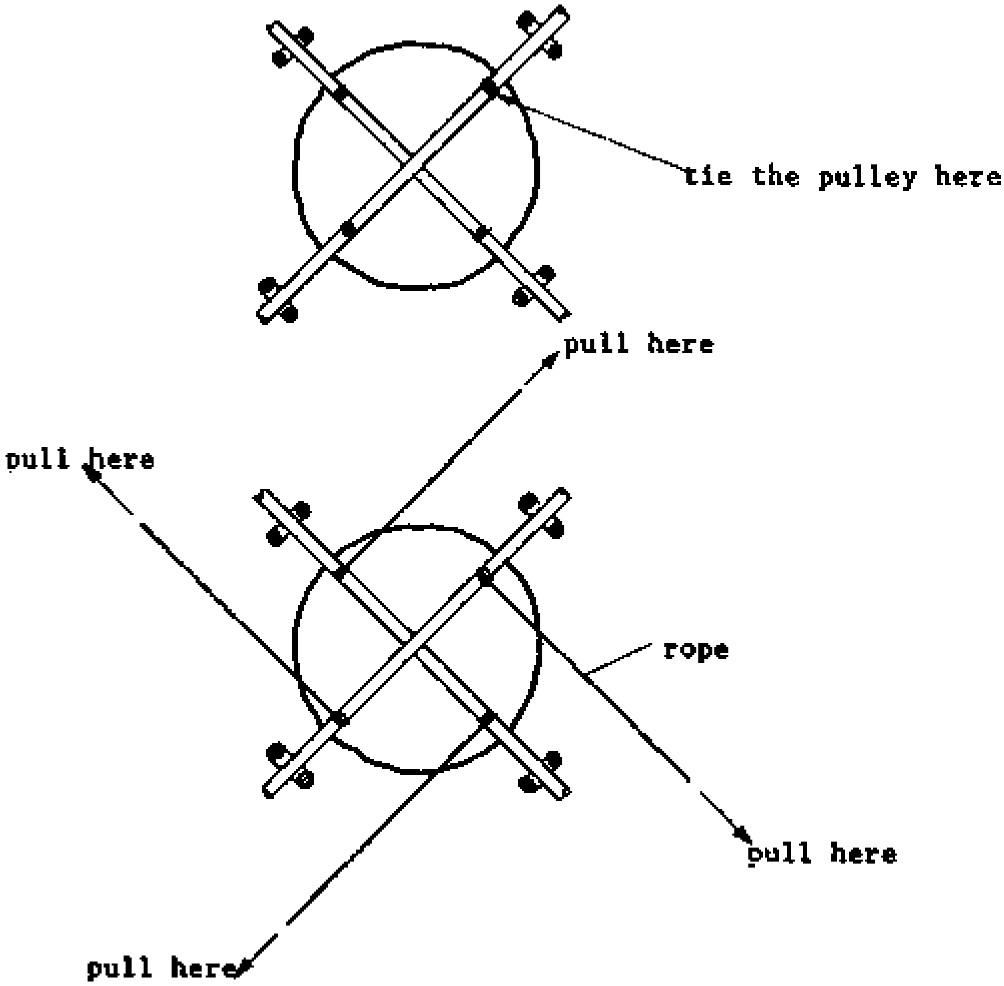

- Lift the ring and let it slide into the middle above the well.

- Remove the poles from underneath.

- Lower the ring into the well.

Advantages:

- No sophisticated equipment is necessary; most of it is available in the village. Pulleys, pipes, ropes should be available within the country.

Disadvantages:

- Very much rope of good quality is required. The rope wears out quickly during lowering. New ropes are required for each well which is very costly.

- Many people (about 40) are needed for lowering rings. It is difficult to get the required number of people (adults!) continuously for the necessary period of time and it is also difficult to coordinate such a number of people. Some will be redundant in between while the technicians work in the well.

- Precise lowering and balancing of the ring is difficult with this method.

- Rings cannot be lowered deeper than 15 m by this method.

Lowering a Concrete Ring with Local Equipment

ISOMETRIC VIEW

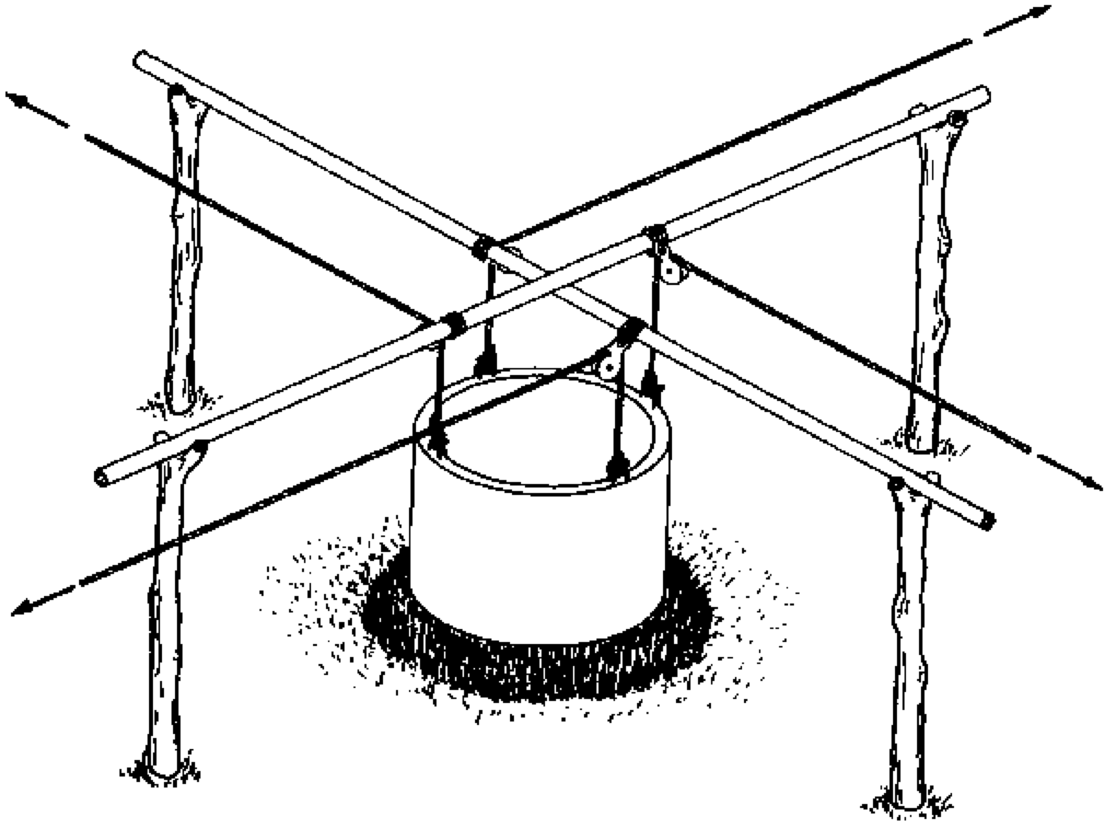

2. Lowering with Light Weight Tripod and Pulleys

Only light concrete rings (maximum Ø 1.10 m, height 60 cm) can be lowered with a light weight tripod consisting of three metal pipes, Ø 2", 3 m long, connected with a steel cable. The weight of the ring is lifted by a tackle.

Tackles

A tackle (= "block and tackle" or "pulley system") is an assemblage of ropes, pulleys, and hooks to lift weights, arranged to gain mechanical advantage for hoisting and pulling. For tackles, four different parameters (= features, characteristics) are to be considered:

ℓ = lift or distance the item has to be lifted;
d = distance the rope is to be pulled to gain the lift (ℓ);
W = weight of the item to be lifted;
F = force needed to pull the rope in order to lift the weight

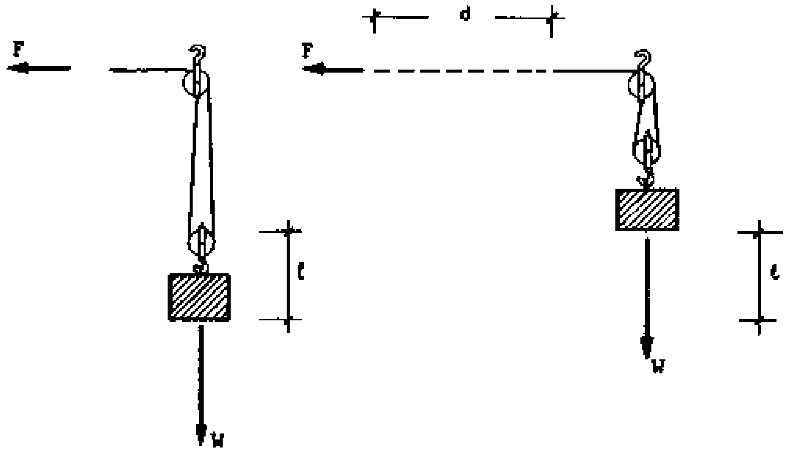

They are connected as follows:

If the distance you pull the rope (d) is a multiple of the lift (ℓ) by the factor (a), then you need to pull with a force (F) which is the weight (W) divided by the same factor (a):

$$d = \ell \times a$$

$$F = W \times \frac{1}{a} = W \div a$$

Check how many rope connections there are between the two pulley blocks. This number is the factor (a), because each rope connection has to be shortened by the lift *(ℓ).*

Applied to the three most simple tackles, this means:

<u>One Pulley Block</u>

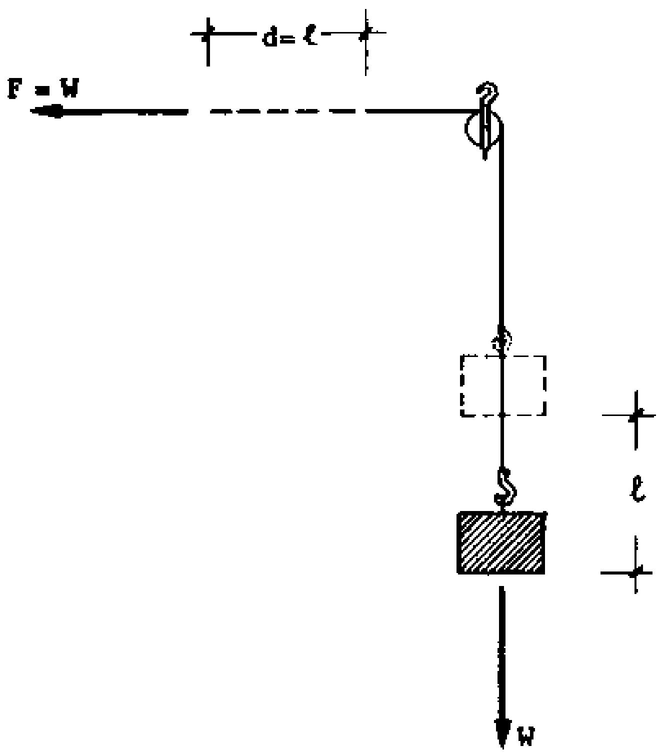

$d = \ell$
$F = W$

You pull the same distance as you lift an item.
You pull with a force as big as the weight of the item.
No mechanical advantage.

Two Single Pulley Blocks

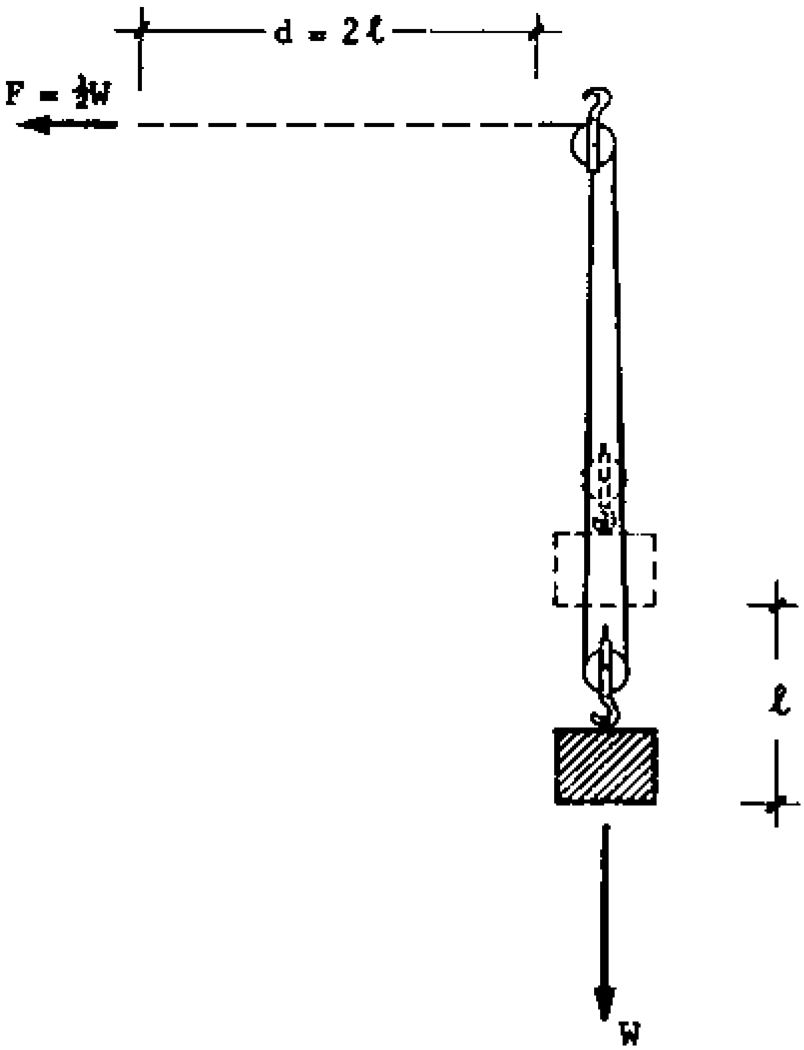

$d = 2 \times \ell$

$F = \frac{1}{2} \times W$

There are 2 rope connections between the two pulley blocks.
You pull twice as long as you lift the item.
You pull with a force half of the weight of the item.

Two Double Pulley Blocks

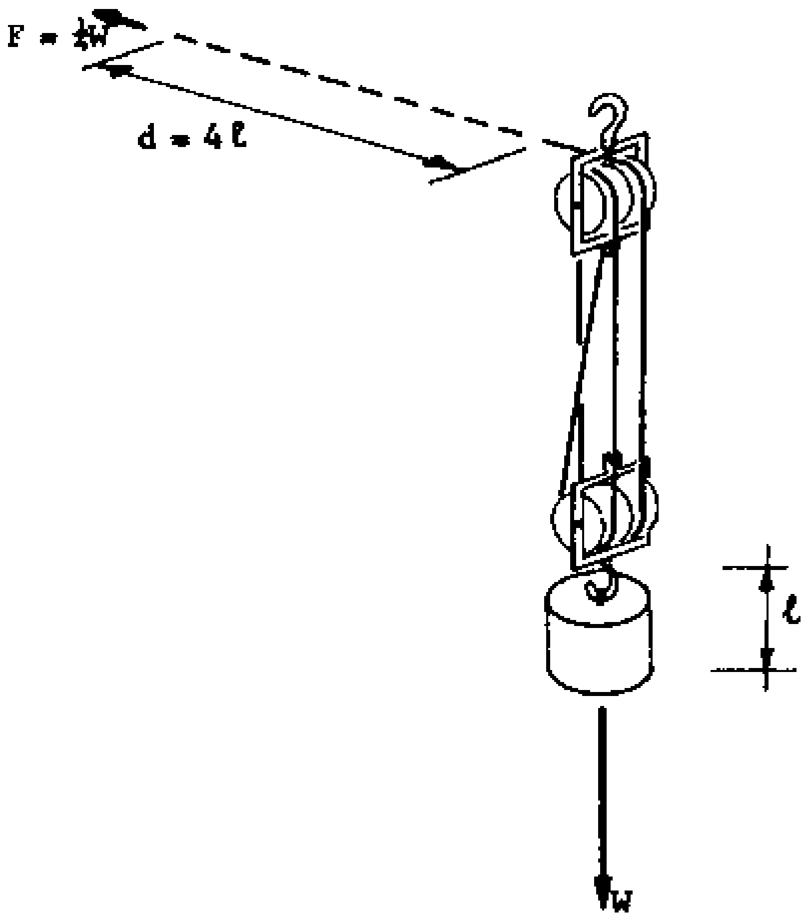

$d = 4 \times \ell$

$F = \frac{1}{4} \times W$

There are 4 rope connections between the two pulley blocks.
You pull four times as long as you lift the item.
You pull with a force a quarter of the weight of the item.

Use this information for calculating the length of rope needed and the number of people requested for a certain task.

Example:

A 400 kg heavy ring should be lowered into a 6 m deep well by a tackle with 2 double pulley blocks.

factor of the tackle	a = 4
distance between ground level and pulley	2 m
lift + distance to head of tripod	ℓ = 6 m + 2 m = 8 m
length of ropes in the tackle	p = 4 × 8 = 32 m
extra rope from pulley to people	10 m
length of rope required	L = 32 m + 10 m = 42 m
weight	W = 400 kg
force for pulling rope	$F = \frac{1}{4} \times 400$ kg = 100 kg
approximate pulling capacity of one person	25 kg

number of people required $\frac{100\,kg}{25\,kg} = 4\,people$

Note:

The lift of a tackle is not unlimited! Beyond a certain length, the item lifted tends to turn along its axis, thus twisting the ropes of the tackle around each other. This danger is even greater if the rope is new. Once the ropes are twisted, it is hardly possible to unwind them and they might even break.

Step-by-Step Procedures for using light weight equipment:

- Place the tripod over the well. All three legs must be in equal distance from each other:

a = b = c

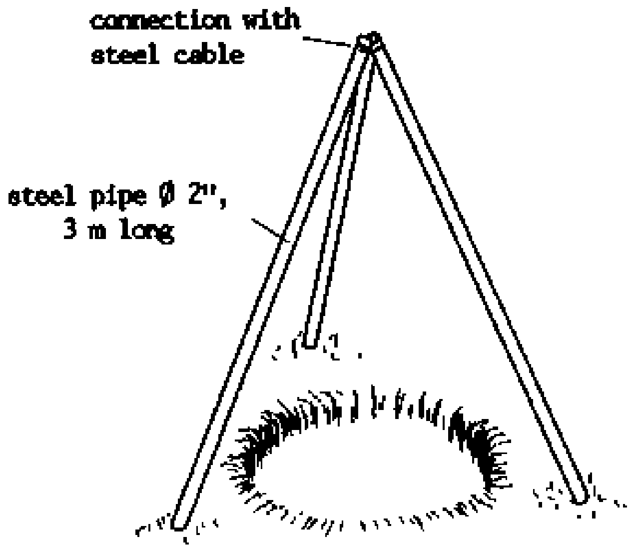

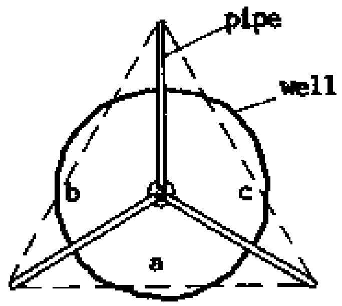

Check with a measuring tape.

- Fix a tackle with two double pulleys on the tripod.
- Connect the rope with the ring with method 1, 2, 3 or 4 of A (see 8.17/1ff).
- Lift the ring and pull it to the centre of the well mouth.
- Lower the ring.

Advantages:

- The equipment is very simple and can be manufactured locally.
- The equipment can be transported from site to site easily.
- The equipment can be erected quickly and with few people.
- The method is handy.

Disadvantages:

- The method can lift only light weight rings.

- This method can be used only for wells up to about 15 to 20 m deep. Below this, there is great danger of twisting the tackle cables.

- The method cannot be used if the mouth of a well is completely washed out (because such a small tripod cannot span a big opening).

- Very long rope is required.

- The rope wears out quickly.

3. Lowering with Heavy Duty Tripod and Winch

Concrete rings can also be lowered with a heavy duty tripod and a hand operated winch with steel cable. The equipment is described in detail under C (see 8.17/15ff).

Step-by-step procedures

see under D (see 8.17/20ff).

Advantages

- Any type of ring, even large ones, can be lowered.

- Rings can be lowered into wells up to 50 m deep.

- The method can be used even if the mouth of a well is completely washed out and wide.

- The method is very handy, quick and precise.

- It is easy to direct the rings inside the well.

- The number of people required is only about 10.

- The steel cable is durable and will not wear out quickly.

- The method is safer than methods 1 and 2.

- Part of the equipment can be manufactured locally.

Disadvantages

- A pick-up with roof-carrier is needed for transporting the equipment.

- Erecting the tripod and fixing the winch is rather time consuming and requires about 10 people.

- It is costly and difficult to purchase the equipment.

- If even only one part of the equipment does not function, the method cannot be used.

4. Selecting the Suitable Method

The selection of the suitable method depends on the number of wells to be constructed, the average depth, the size of the rings and the availability of equipment. Whenever several wells are to be constructed, a permanent tripod from metal pipes is advisable (method 2 or 3).

Method 2 is suitable in an area with shallow wells (up to 20 m) and with good roads. In that case, small rings can be manufactured in a central workshop, transported to the site and lowered there with light weight equipment.

In an area with bad roads, central manufacturing of rings is not suitable-Large rings can be produced on site and lowered by method 3. For deep wells beyond 20 m and rehabilitation of wells which have been washed out very much on top, only method 3 is possible. This method is suitable for most conditions and is advisable if the size of the project and the financial possibilities allow; it is described in more detail under C and D.

C) Heavy Duty Equipment for Lowering Rings

Heavy duty equipment for lowering concrete rings into a well consists of the following elements:

1. Tripod

A heavy duty tripod consists of the following elements:

- 2 single legs, Ø $2\frac{1}{2}$ “ or Ø 3”, 6 m long
- 1 double leg from the same pipes, with steps
- head of tripod, connecting the legs, with an eye to hold the pulley
- device to take up the winch

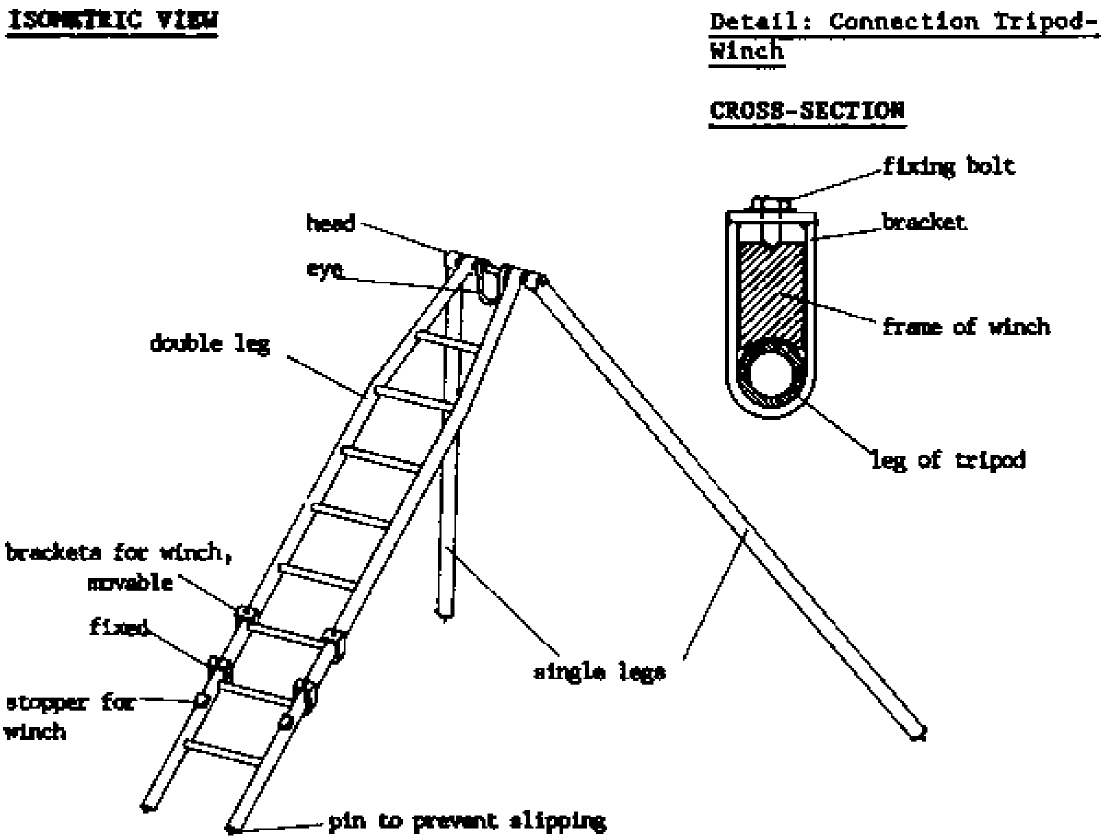

Design: Van Reekum Materials, Netherlands

Check the connection between the legs regularly for damage.

Never load the tripod if one of the legs has even a slight bend!

Watch the tripod when you put it under load.

Tripods can be manufactured locally in a welding shop or purchased ready-made.

2. Steel Cable

Steel cable of Ø 10 nun is suitable for lifting concrete rings. It has a soft core with several thinner steel cables wound around it.

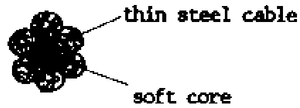

If handled carefully, steel cable is very strong and durable.

Steel cable must always be wound up “under tension”. If necessary, provide the tension by pulling the cable by hand while winding up. Never attempt to fold steel cable.

Steel cable is only strong if all parts are intact.

Never use steel cable for heavy loads if even one of the parts is split or broken.

After lowering several rings, the cable might be more twisted than usual due to the turning movements of the ring. In this case, the cable tends to fold itself while not under tension:

In the long run, this spoils the cable at the fold. Never try to straighten the cable by force, but untwist it carefully. Prevent folds by untwisting the cable from time to time.

Protect the ends of steel cables by gas welding. Otherwise, the cable will unwind itself and get weak. The split ends of a steel cable can also badly hurt people.

Use two wire rope clamps (= cable clamps) and a thimble for the ends of a steel cable.

Tie the wire rope clamp firmly, but do not squeeze the cable. Tie the clamps in opposite direction. See also 6.3/40.

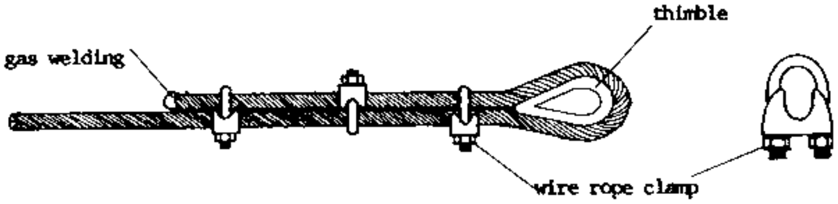

3. Winch

A hand-operated winch for lifting concrete rings consists of the following elements:

- a drum for winding up the steel cable,
- a gear,
- two winding handles,
- a safety device which blocks if the load is suddenly released (= ratchet),
- a lever brake,
- a connecting device to the tripod (see 8.17/15).

Operate the winch with great care. There should be always at least one person at the winch who is familiar with its operation.

Be alert that the safety device is operating at all times. You hear it by the continuous tak-tak-tak sound while lifting.

The safety device is to be suspended only during the actual lowering by a special handle. The person holding this handle must be prepared to release it at any time in case of danger and to brake at the same time. This handle must move freely and fall against the ratchet by its own weight.

Make Sure that the gear is properly engaged.

The pin holding the cover must be well closed. If the cover gets loose, the gear can suddenly disengage and release the load.

Sudden release of a load like a concrete ring is extremely dangerous. The well can collapse; the ring will break; parts of the equipment may break; the handles of the winch will turn with terrible speed and can hurt somebody very badly.

Do not load the winch suddenly. Use the brake to make the movements smoother and to assist controlling the load when lowering.

For details of the winch see the picture next page.

Winch

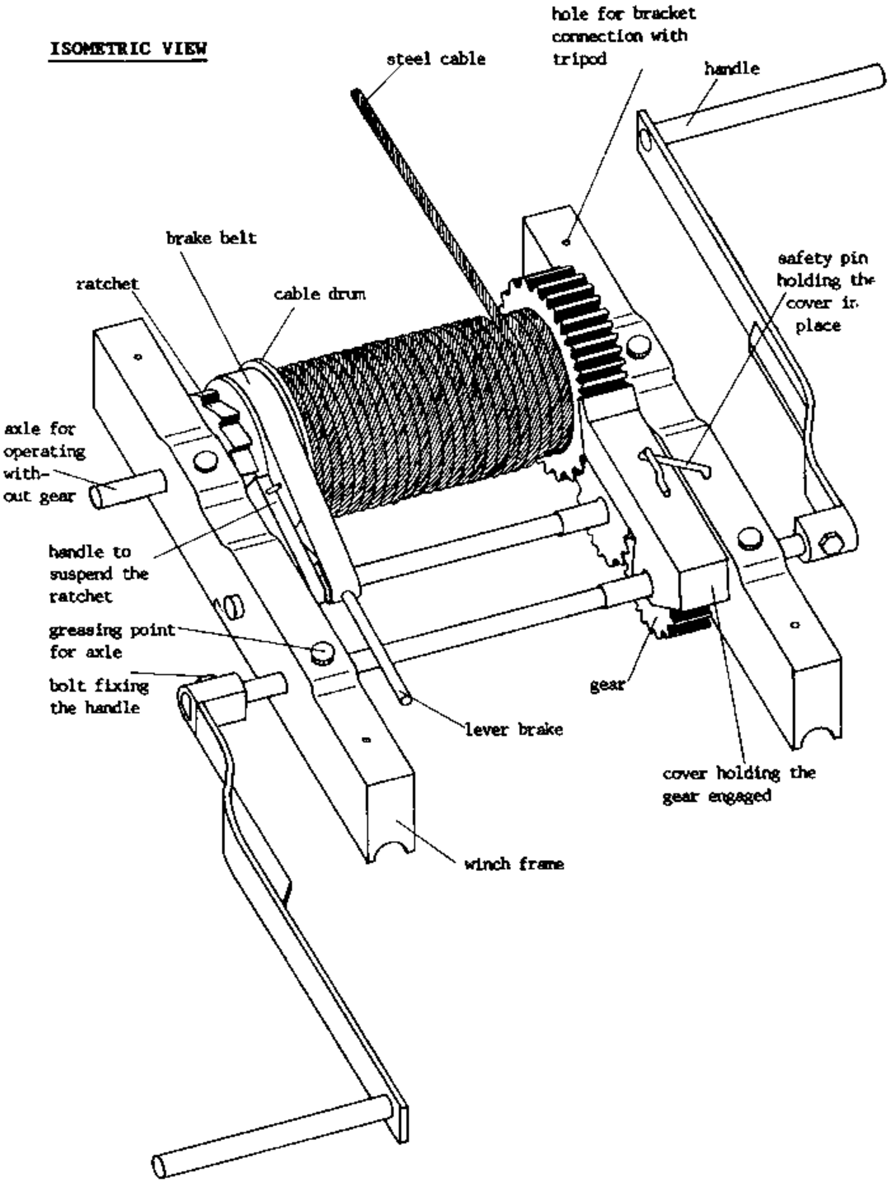

Design: Van Reekum Materials, Netherlands

4. Shackles

The eye of a steel cable can be connected to a swivel-hook, a pulley, another steel cable, or a load by the help of a D-shackle or a connecting link.

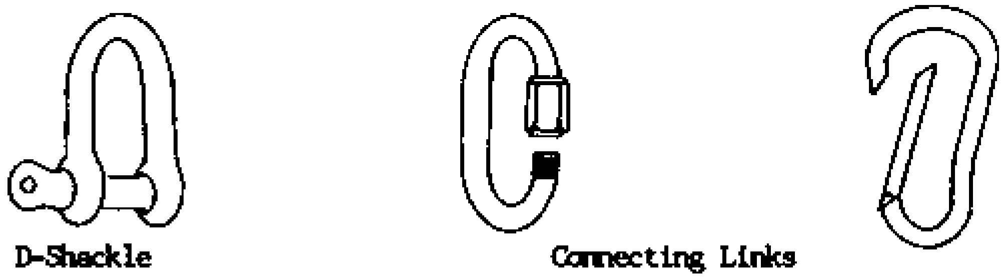

These connections are safe and can be quickly assembled and disassembled. The shackles and connecting links are available in different sizes. The size has to be selected according to the cable diameter and the load. See also 6.3/40.

5. Pulleys

Pulleys consist of the following elements:

- a wheel with a grooved rim to hold the cable or the rope
- an axle
- a frame holding the axle
- a swivel hook
- an eye

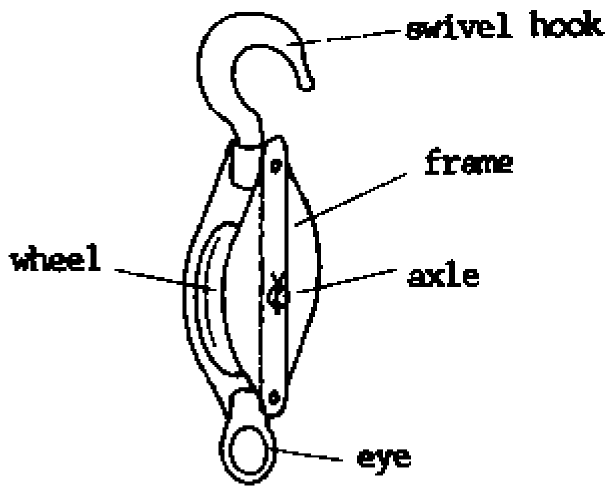

Clean and grease the pulley regularly. Check the hook and the eye. Make sure that the pulley is carefully tied on the tripod and the cable is running smoothly on the wheel without rubbing against other parts. See also 6.3/10.

6. Swivel Hook

A swivel hook (= lifting hook) is a hook from forged steel to lift a given load. Good swivel hooks always have a safety catch. See also 6.3/40.

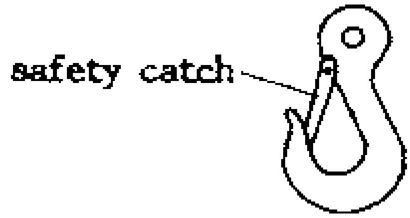

D) <u>Steps of Lowering Rings with Heavy Duty Equipment</u>

When lowering rings with heavy duty equipment, follow these steps:

1. <u>Erecting the Tripod</u>

No	Step	Reasons
1	Erect the tripod. The top shall be exactly over the centre of the hole. The angle between the tripod legs and the ground level should be about 45°. Both single legs must stand at the same distance to the double leg. The distance between the feet of the single legs should be about 4 m. Measure the distances between the legs with a measuring tape. Dig holes for the feet of the legs.	If the tripod is not properly erected, it can tip over during the work and cause damage and danger.
	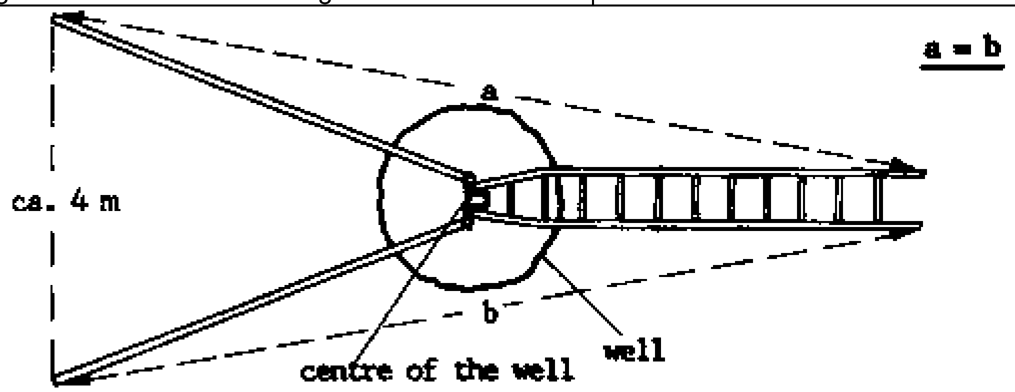	
2	Fix the winch on the double leg and a pulley at the top of the tripod. Standing behind the winch, the cable must be seen hanging exactly between and parallel to the legs of the double leg. from the other side, the tackle cable must be in the centre of the well.	Thus the centre of gravity of the ring hanging on the tripod will be within the three legs and will not pull the tripod over.
	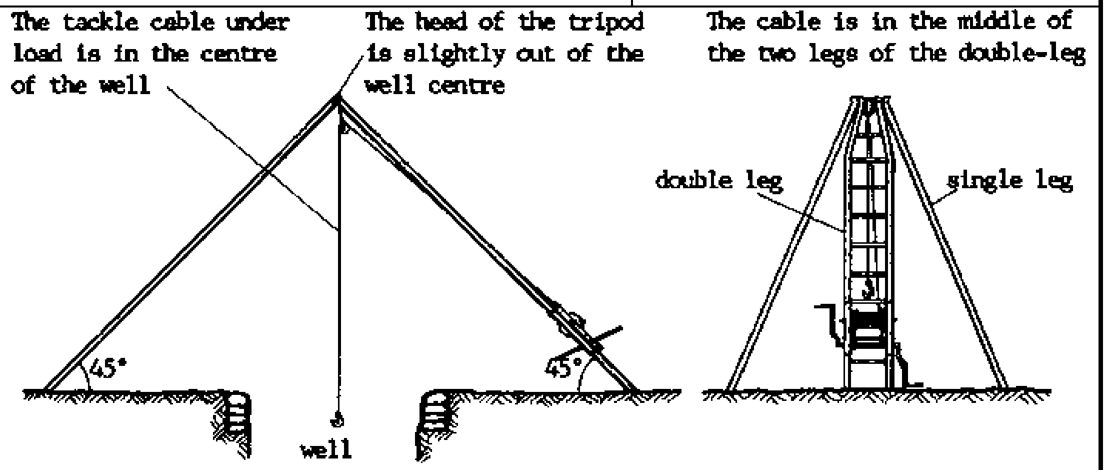	

2. <u>Lowering the First Ring</u>

1	Level the bottom of the well. Check with a spirit level.	The bottom must be level so that the first ring will be level, too.
2	Lay three pipes Ø 3” across the hole, parallel to the double leg. Role the ring near to the hole (position No. 1) and turn it over into horizontal position (No. 2) with the help of a rope sling and enough people. Be very careful. The ring should stand between the two single legs.	If the ring rolls into the well, it will break and damage the well.
	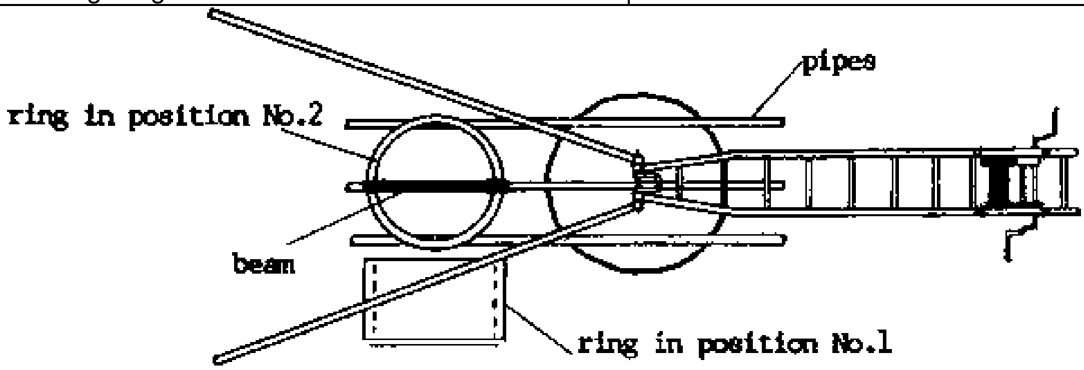	
3	The cable sling is fastened around the ring with the beam by method No. 4 in A. and attached to the tackle cable. The beam shall be parallel to the double leg. For middle size rings, a tackle with one pulley block and one cable is sufficient. For deep wells, lowering is only possible with <u>one</u> tackle cable. For very shallow wells up to 8 m and large rings, a tackle with two cables and two pulley blocks should be used.	The beam prevents the top of the ring from being crushed. The sling provides safe lifting. In deep wells the ring is bound to turn. Two cables would twist around each other and block.
4	Pull the cable gently upwards and push the ring on the pipes into the centre of the hole. <u>Nobody must ever be underneath a ring</u>. Nobody should put a hand or foot underneath a ring.	The ring moves into the middle of the hole in a controlled way. <u>Safety first</u>. In case of an accident the ring can kill somebody underneath.
5	Re-adjust the sling. Lift the ring and check if it hangs horizontally.	If the ring does not hang horizontally, it can loose balance and it can get stuck in the well.
6	Pull the pipes away from the hole.	They are not needed for loring, but in the way.
7	Pay out (= release) the tackle cable and lower the ring into the well until it reaches the bottom of the well. <u>Nobody</u> must sit on the ring while lowering.	In case of any failure, a person sitting on the ring while lowering would be in great danger.
8	Lower a technician into the well by a second pulley, rope, and piece of wood (see 8.21/2). Check the position of the ring with the spirit level (see in detail 8.15/4). If not exactly level, lift the ring slightly and remove some soil from underneath until the ring is exactly level.	A well is less stable if the walls are not vertical. In a deep well, the top rings will not fit, but touch the wall, if the first ring is not level. To straighten the rings later on is much more difficult.
9	Remove the sling from the ring and wind up the steel cable.	The swivel hook is heavy enough for winding up the cable under tension.

3. <u>Lowering the Rings below Water Table</u>

<table>
<tr><td>1</td><td>Lower the next ring in the same way (repeat No. 2, steps 2 to 6)</td><td>All rings are lowered in the same way.</td></tr>
<tr><td>2</td><td>Pay out (= release) the tackle cable and lower the ring until the ring has reached the previous ring. You can direct the ring from the top by pressing a pipe against the tackle cable in the desired direction.</td><td>Sometimes the ring must be directed because the well is narrow at some spots.</td></tr>
<tr><td></td><td colspan="2">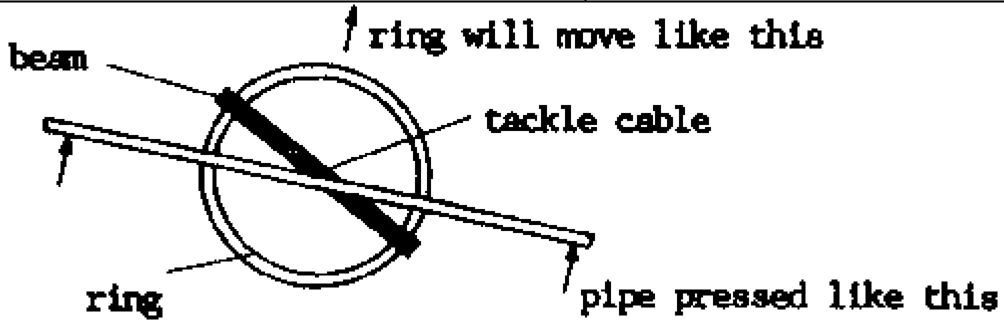
</td></tr>
<tr><td>3</td><td>Lower a technician into the well. She/he should sit on the beam with the legs on both sides of the beam against the walls of the well. The hands should also lean against the wall. Lift the ring by about 5 cm. While being lowered again, the technician can direct the ring so that it is placed exactly on the previous one, with the rebates fully attached.</td><td>In most cases the ring will not get placed automatically in the correct position, but it must be directed. The described position keeps the ring in balance and enables the technician to direct the ring easily.</td></tr>
<tr><td></td><td colspan="2">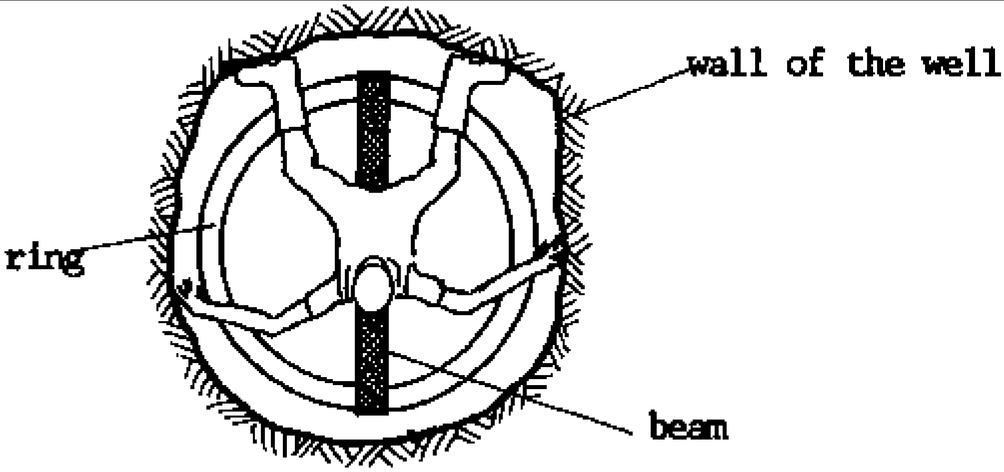
</td></tr>
<tr><td>4</td><td>Check if the ring is level. Remember the direction of the neutral line (= connection between the two neutral points). If necessary, correct by putting sand or mortar between the rings on the lower side.</td><td>It is acceptable if the ring is out of level by 0.5 to 1 cm, especially, if the direction of the neutral line changes with each ring.</td></tr>
<tr><td>5</td><td>Remove the sling from the ring and wind up the steel cable.</td><td></td></tr>
<tr><td>6</td><td>Continue to lower rings in the same manner. In between you might need to dewater the well.</td><td>For dewatering wells during construction see 8.25, 8.26, 8.27,8.28.</td></tr>
<tr><td>7</td><td>If the cable is too much twisted after lowering some rings, untwist it.</td><td>See 8.17/16</td></tr>
</table>

8	Backfill after stacking <u>maximum 4 to 5</u> rings above each other. Fill clean gravel between the rings and the wall all around. This work becomes much easier if you use plastic pipes Ø 4” and a funnel and pour the gravel directly from the top evenly all around. Take great care that the pipes are properly connected and suspended and no gravel misses the funnel.	The backfill prevents the rings from horizontal movement and bears part of the rings’ weight through friction. 6 or more rings put on top of each other, without horizontal support, is a very unstable and dangerous construction. It might cause breakage, uneven sinking or tilting to the side. Gravel backfill below the water table allows the water to enter the well. A single stone, missing the funnel, is a great danger for the technician below.

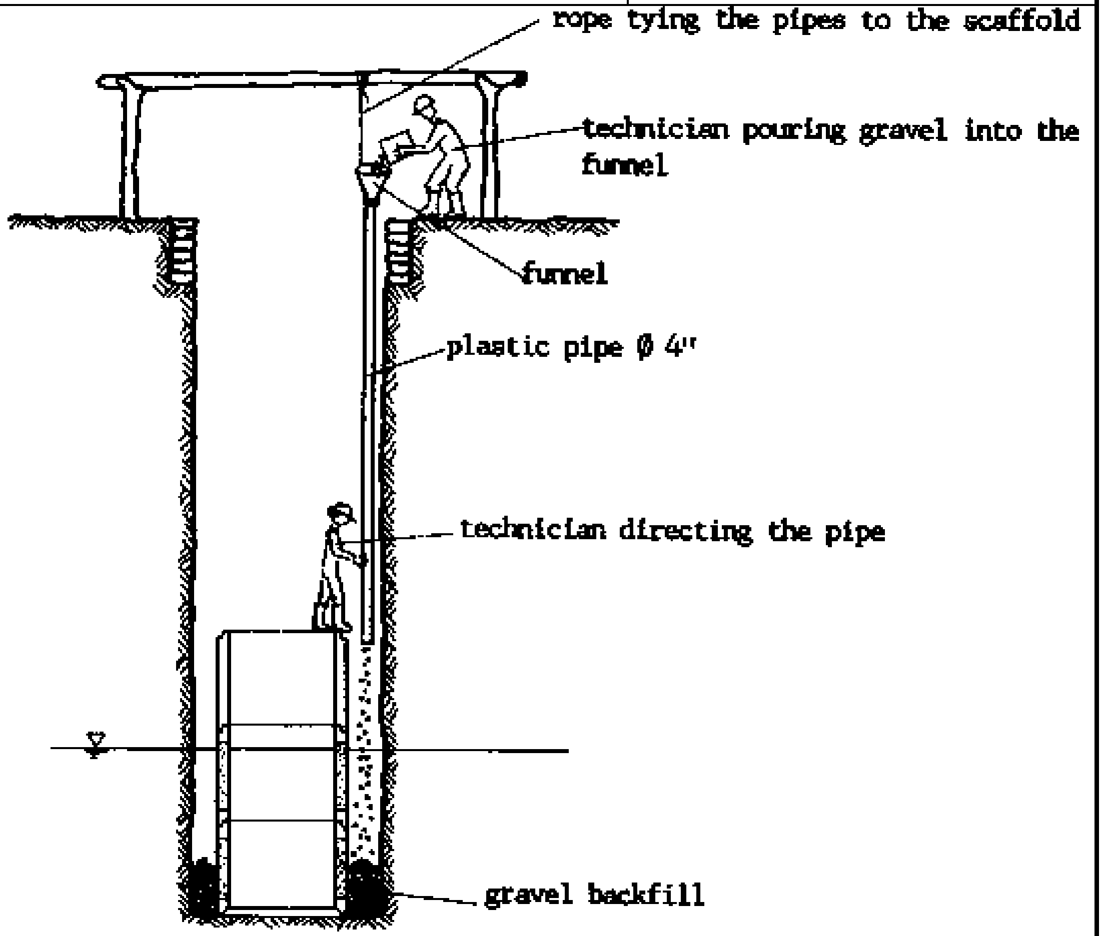

4. Lowering the Rings above the Water Table

1	For rings above the water table, spread mortar on the rebate before lowering the next ring.	Above the water table, the joints should be watertight to prevent surface water from entering the well (8.16/4;
2	Lower the ring. Repeat No. 2, step 2 to 9.	
3	Lower a technician sitting on a bosun's chair. She/he should close the joint between the two rings with cement mortar.	The joints between the rings should be smooth from inside.
	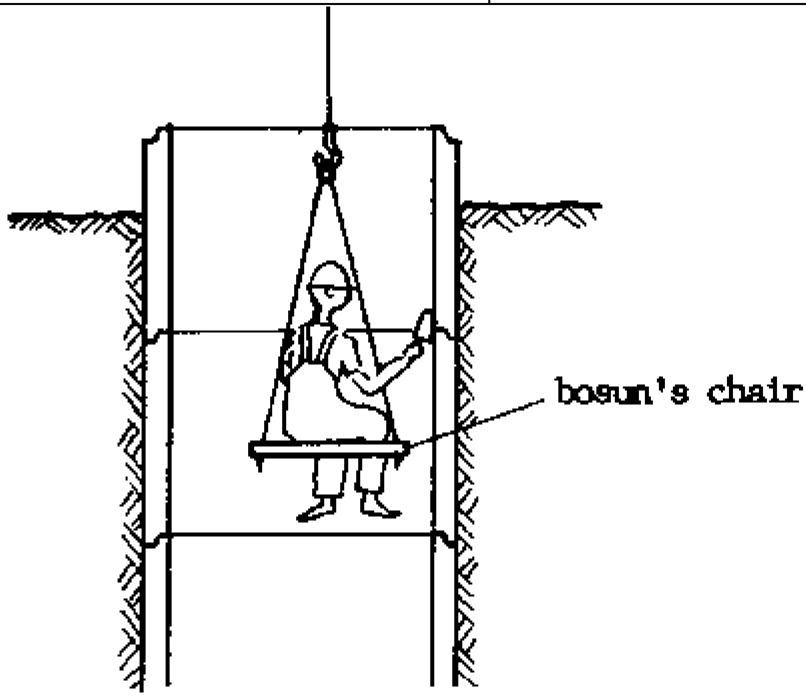	
4	Backfill the rings above water table with clay. Compact it well.	Clay backfill is an additional protection to prevent surface water from entering the well.

8.18 Manufacturing a Well Cover

A well cover is a cover made from concrete to be placed on top of the lining. The purposes, the types and the manufacturing procedures of a well cover are described in this chapter.

A) Purposes of a Well Cover

A well cover serves the following purposes:

1. It prevents (or reduces) possible pollution of the water in the well.
2. It holds the pump or any other water lifting device.
3. It provides an emergency opening in case of pump break-down.
4. It is removable in case major maintenance or deepening the well becomes necessary.

B) Well Covers for Different Water Lifting Devices

The well covers differ according to the water lifting device to be used.

1. Well Covers for a Bucket

Lifting water by bucket and rope is appropriate wherever maintenance of more sophisticated systems cannot be ensured. In this case, any well cover is already an improvement on wells without.

These are possible well covers for buckets:

Open well with elevated ring and roof:

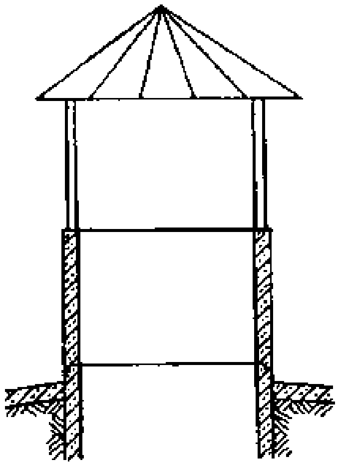

Concrete well cover with door:

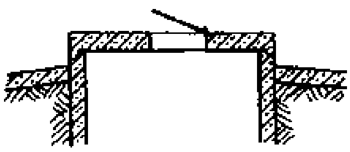

Elevated concrete well cover with door:

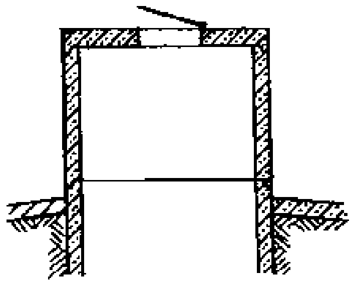

The elevated concrete well cover provides most protection from pollution.

2. Well Cover for a Hand Pump

If a hand pump is to be installed, the well cover must be from reinforced concrete in order to withstand the movements and vibrations of the hand pump. The hand pump body can be either cast directly into the cover, or bolts are cast into the cover and the pump is later fixed with nuts. The former is a very strong, watertight connection, the latter has the advantage that the pump can easily be replaced by another type. However, if the seal is not intact, the connection might not be watertight.

Hand pump cast into the well cover:

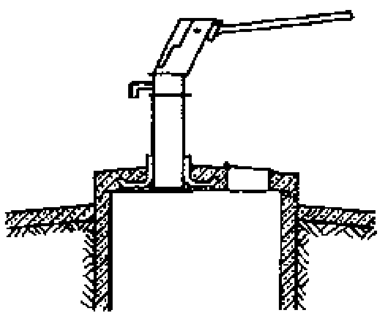

Hand pump fixed with bolts to the well cover:

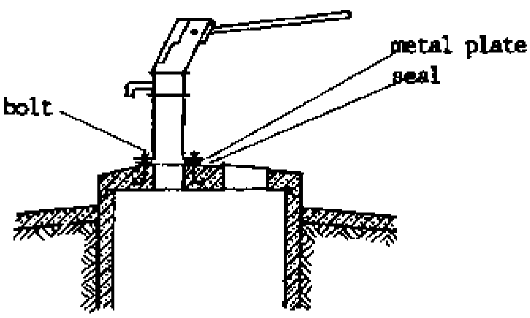

3. Well Cover for Electrical Pump

The installation of an electrical submersible pump requires only a cylindrical opening of 10 to 20 cm Ø. The electrical cable and the delivery pipe will enter the well through this opening. However, the opening must be sealed watertight by a metal sheet or rubber cut to fit exactly to prevent pollution.

Well cover for electrical pump:

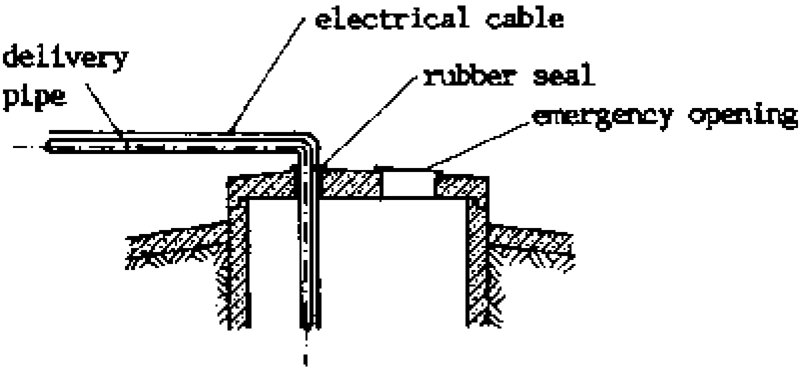

C) Emergency Openings on Well Covers

The advantage of a large diameter hand dug well is that the cover is big enough for an emergency opening. This is to be used whenever the pump breaks down, cannot be repaired immediately, and people need the water, or when cleaning of the well bottom becomes necessary. The emergency opening can be constructed in three different ways: a manhole with metal door, a man hole with concrete lid, or a cover cast in two sections, one of them being removable.

CROSS-SECTION

Manhole with metal door: Manhole with concrete lid: Well cover with removable section:

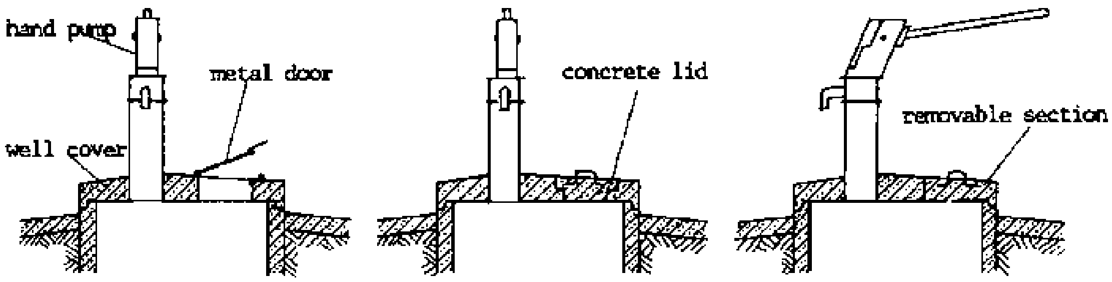

LAYOUT PLAN

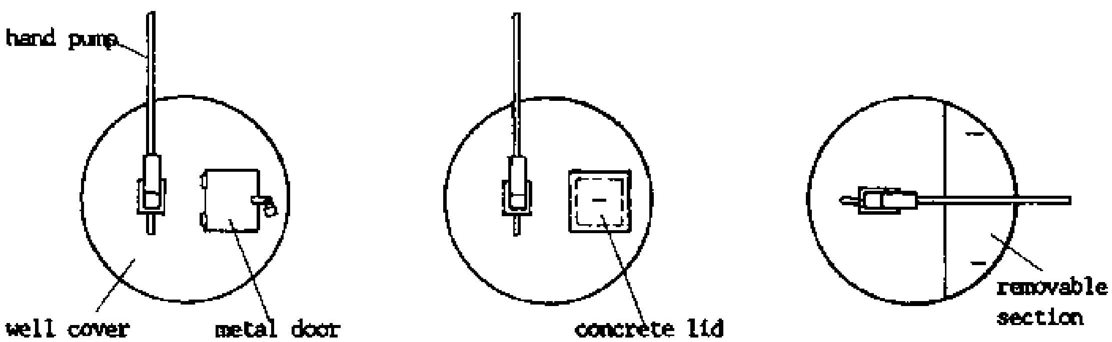

Having an emergency opening is one of the advantages of a hand dug well over a borehole and, therefore, it is not at all advisable to build a well cover without an emergency opening.

D) Moulds for Making Well Covers

A well cover should fit properly on the top of the lining. Different moulds can be used:

1. Mould from Timber for Well Cover on Top of Brick Lining

A simple mould can be made from timber for an octogonal (= having eight sides) well cover instead of round shape. Only the corner pieces have to be cut to size. An octogonal cover is lighter than a square cover.

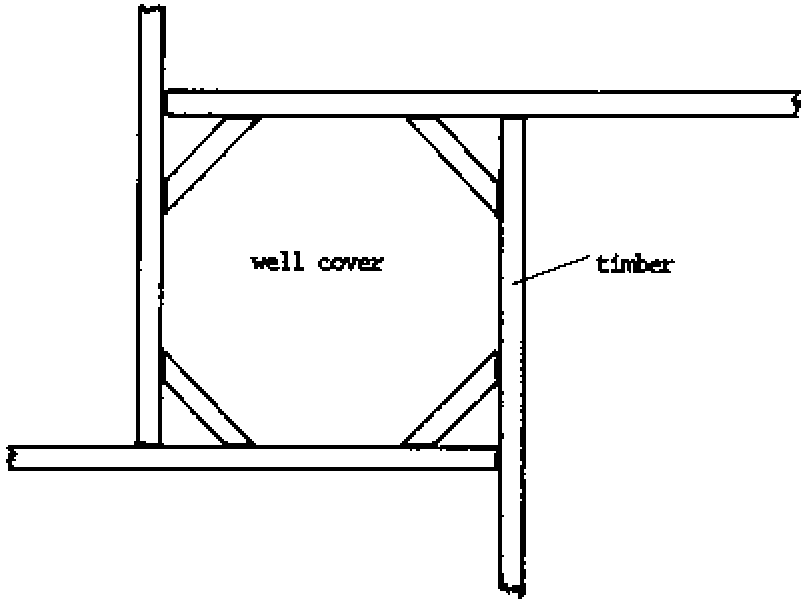

2. A Hole as Mould for a Round Well Cover

A hole dug into the hard ground can serve as a mould, but only once.

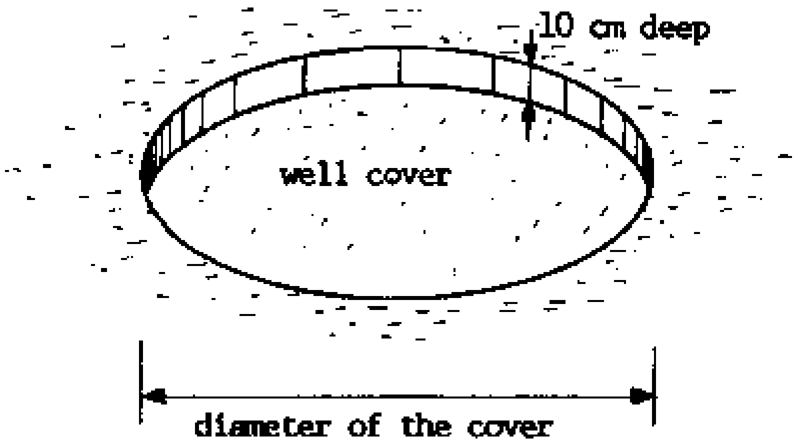

3. Outside Mould for Concrete Rings

The outside mould for rings can be used to manufacture an exactly fitting well cover. This method, described under E), is not very handy, because the big mould hinders the work, but it should be used if a special mould for well covers is not available.

4. Special Mould for Well Covers

A special mould for well covers looks exactly like the outside mould for a ring, although the height is only 15 cm.

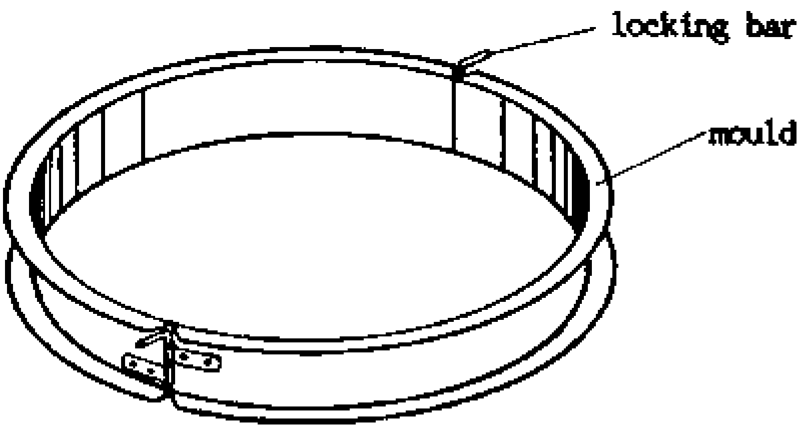

Manufacturing a Well Cover:

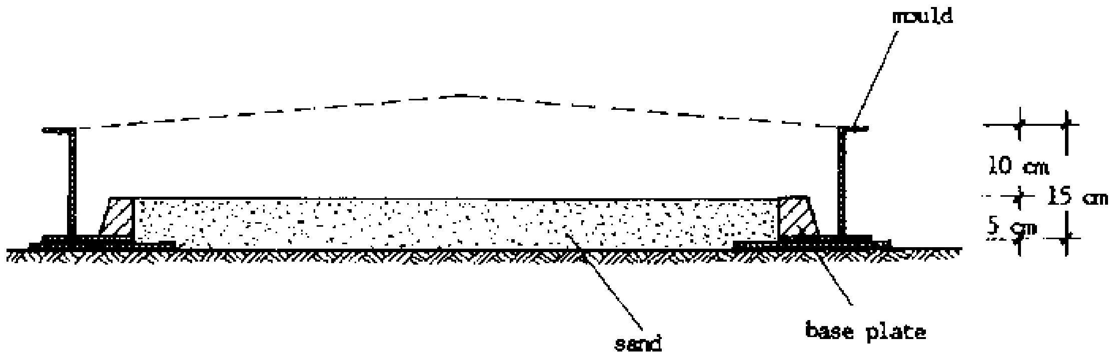

SCALE 1:10

The Finished Well Cover:

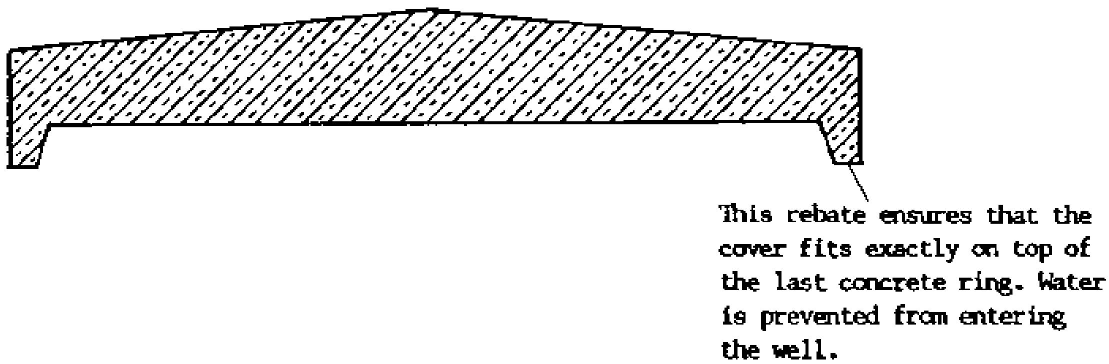

E) Casting a Well Cover

Casting a well cover is explained here for an India Mark II hand pump which is cast into the cover, and has a manhole with metal door. An outside ring mould is used. The other types can be manufactured in a similar way with minor modifications. The different parts of the pipe mould are explained in 8.16/7f.

The described well cover with its reinforcement is strong enough to withstand the dynamic load of a hand pump and will not develop cracks if well made.

Step-by-Step Procedures

No	Step	Reason
1	Cut a triangle from each of the legs of the pump body. Bend them into horizontal position and weld the cut.	The pump body suitable for boreholes needs to be adjusted for a hand dug well cover.
	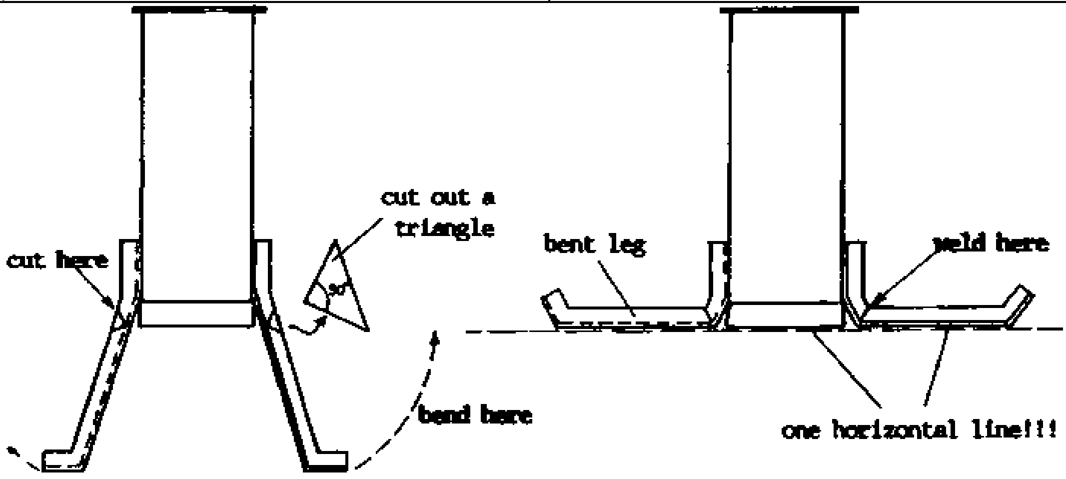	
2	Provide the metal door of the man hole with locking facilities (e.g. iron bar with hinge for padlock) and anchors (“dastours”). Nail a wooden frame as shuttering for the man hole.	A man hole is necessary for cleaning the well bottom or for drawing water when the pump is broken. It must be lockable in order to prevent contamination.
	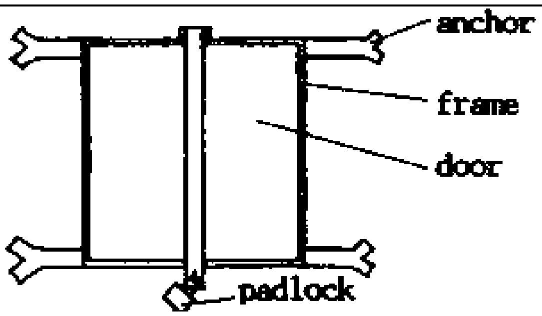	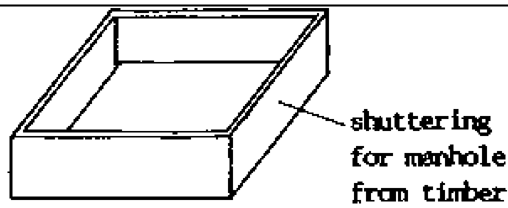
3	Place the base plate of the pipe mould horizontally and fill it with wet sand up to the brim.	The base plate needs to lay horizontally because the position of the pump body and the slope of the slab need to be measured from horizontal ground.
	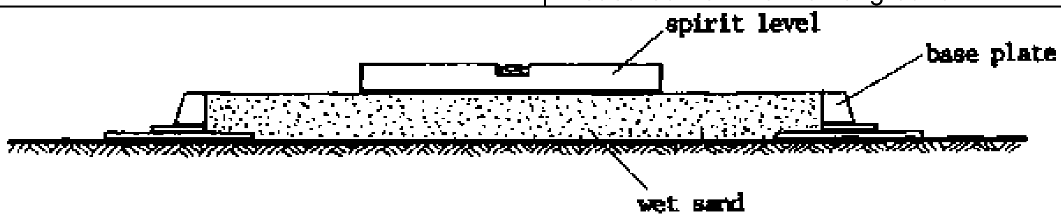 Scale 1:15	

4	Make a ring from reinforcement (8 6 mm laying 2 cm inside the edge of the base plate. Cut welded mesh into round shape slightly smaller than the pipe mould.	The reinforcement ring Ø 6 mm shall reinforce the edge of the cover. The welded mesh prevents the cover from bending and breaking.
	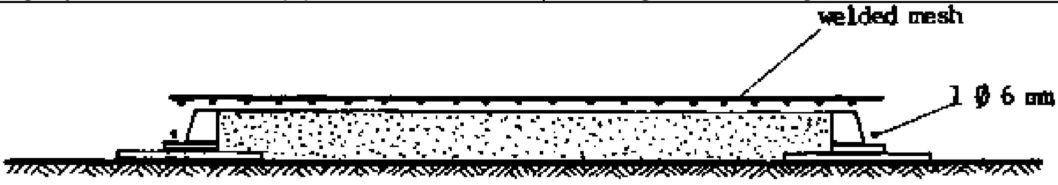 Scale 1:15	
5	Place the pump body and the man hole shuttering and door on the welded mesh in correct position. One leg of the pump body must be in direction of the spout. Cut openings into the welded mesh accordingly. Cut reinforcement Ø 16 mm and place the bars under the tip of the legs of the pump body. Fix additional reinforcement Ø 6 mm outside the man hole. Fix all reinforcement with wire.	If the different parts are too near to each other, the legs of the pump will not be properly embedded in the concrete. The reinforcement bars Ø 16 mm carry the pump body and take up the movements.
	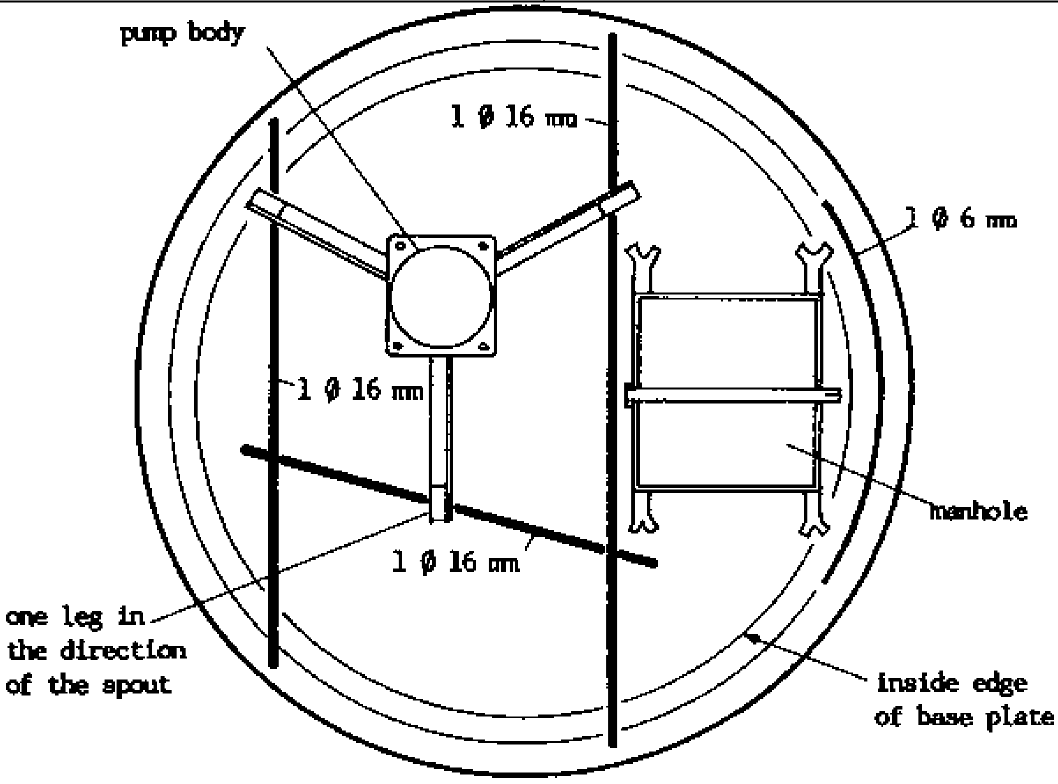 Scale 1:15	
6	A ring from zinc is placed in the position of the pump body, the shuttering in the position of the manhole, and both are filled with sand. All other parts are taken away. The outside pipe mould is placed on the base plate. Paint mould and base plate with old engine oil. Pour 2 cm concrete (mixture 1:3:4) into the edge and compact it. The reinforcement rod Ø 6 mm is placed on top.	The base plate and the outside mould ensure that the cover will fit exactly on top of the last ring. The zinc ring prevents concrete from pouring through the gap below the pump body. The shuttering will provide the manhole opening.

	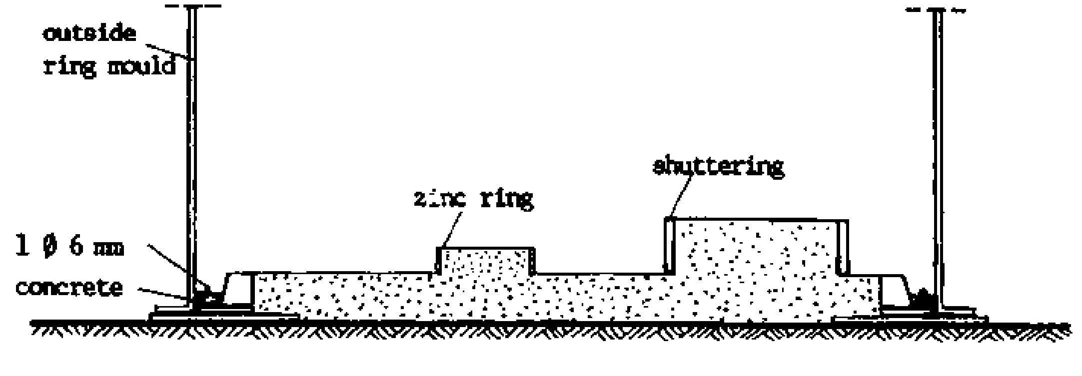 Scale 1:15	
7	Pour concrete 2 cm thick all over the cover and compact it well. Place welded mesh, reinforcement bars Ø 16 mm and the pump body on top. Check the position of the pump body with the spirit level (in all directions).	Concrete 2 cm thick must be <u>underneath</u> the reinforcement in order to prevent it from corroding. The pump body's top needs to be horizontal so that the riser main pipes will hang vertically.
	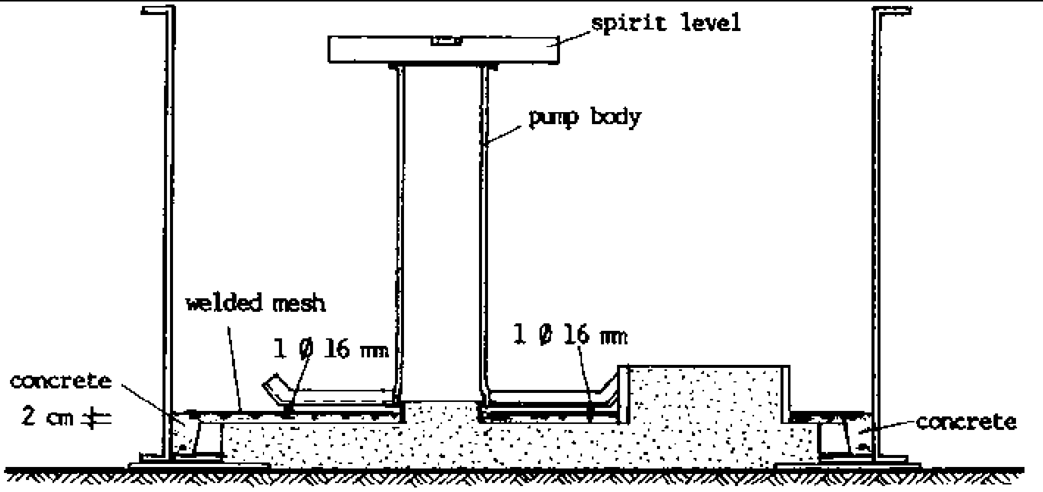 Scale 1:15	
8	Pour concrete into the cover and compact it until the legs are almost covered. Place small pieces of welded mesh above the tips of the pump legs. Place the manhole door with a slight slope outside.	Welded mesh above the tips of the pump legs prevents the surface of the slab from cracking due to pump movements. The water should run quickly over the manhole instead of entering.
	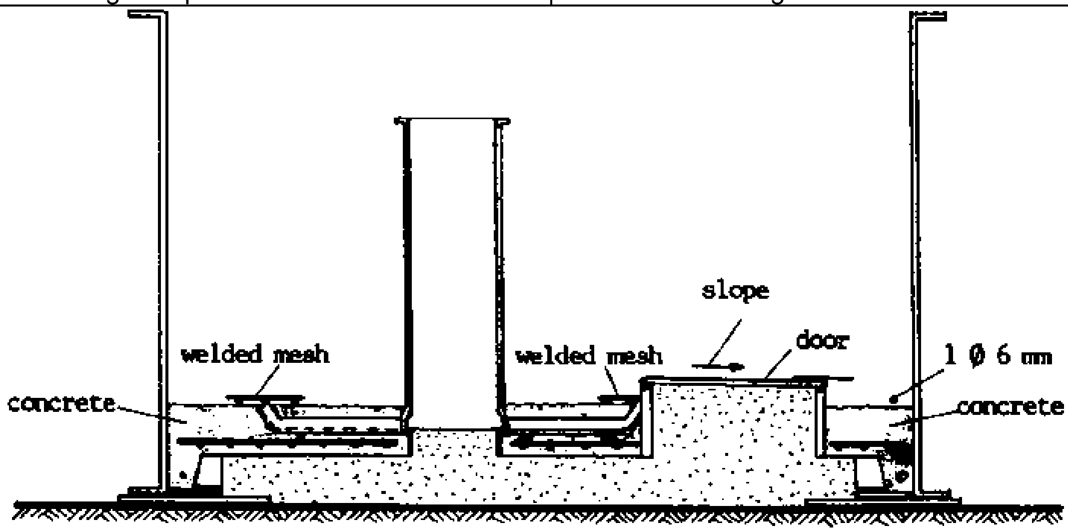 Scale 1:15	

9	Poor concrete up to the brim of the door frame. It should well cover the pump legs (the slab will such become 10 to 12 cm thick). Cover the slab with cement mortar (mixture 1:4). It should have a slope in all directions, however, a bigger slope under the spout. Smooth the surface with the trowel and sprinkle cement on top with a small sieve.	The pump legs needs to be well covered in order to prevent cracking and corroding. The slope ensures that rain water and spilled water runs away quickly. A smooth finish is slippery and dangerous. A rough finish is not slippery and strong.
	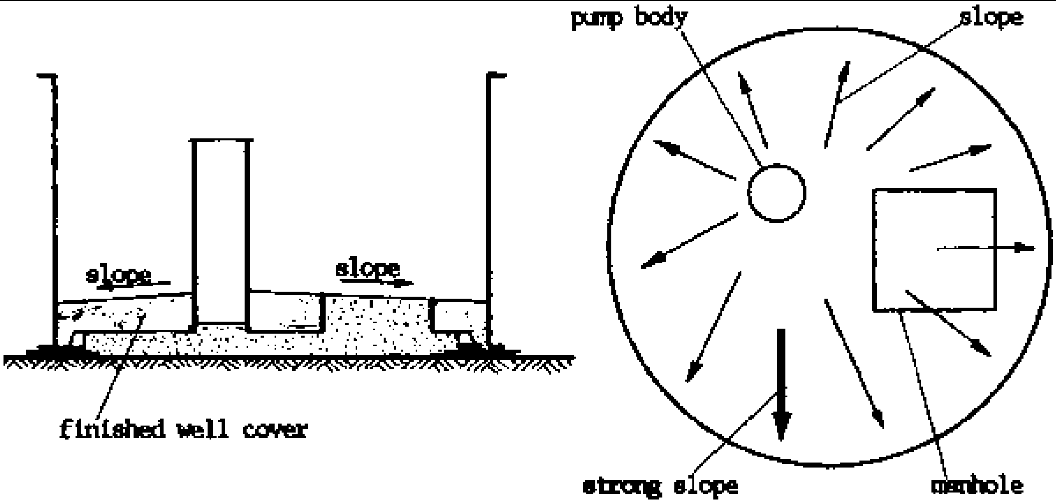 Scale 1:25	
10	Write the date into the fresh concrete. Cover the slab three hours later with wet sand. Keep it wet for one week.	Curing the concrete (= keeping it wet) makes it very strong and prevents cracks. This is especially necessary because the cover will be subjected to dynamic load.
11	Place the cover on the well only <u>after two weeks at the earliest</u>.	Before that the cover is not yet strong enough. See 6.6/6f.
12	Install the pump <u>after three weeks at the earliest</u>.	Dynamic loads must not be exerted earlier because they are heavier than static loads. If cracks have once developed, they will widen through the pump movement.

8.19 Well Head with Hand Pump

For the users, the well head is the only visible and most important part of a well. It is as important for the functioning of a well as the parts below. The elements of a good well head are explained here, both for a borehole and a hand dug well, as they are almost alike. For other types of water-lifting devices, the well head is basically the same except for the pump parts.

It is a completely false economy to try to <u>save money</u> by making a smaller platform or by using a weak cement mixture, or to <u>save time</u> by installing the pump before curing is complete. Such measures will certainly lead to cracks in the platform, which subsequently leads to quick pump break-down and pollution of the water. To repair a cracked platform means having to destroy it completely and to replace it by a new one. This, obviously, is much more expensive than making a proper platform in the first place. To repair the hand pump repeatedly without repairing the cracks is a waste of money because cracks allow the pump body to move and to shake, and the constant unnecessary vibration is bound to wear out the hand pump parts quickly.

How to construct a good well head is described in 8.20.

A) Elements of a well head

A well head with hand pump (or a water point with tap) consists of the following elements, both for borehole and hand dug well:

No	Part of the Well Head	Description	Function	Pay Attention at	Work of
1	pump body	body with three legs	to hold the whole hand pump incl. pipes and pump head	one leg in the direction of the spout, positioned level	WS
2	pump foundation	concrete block 0.80 × 0.80 × 0.80 m or well cover	to prevent pump from moving	pump legs well covered with concrete	WS
3	platform	concrete slab 0.10 m thick, with elevated edges	to prevent dirty water from entering the well	slight slope towards drainage channel, a jerrycan must fit under spout	WS
4	pumping stand	elevated concrete slab	to give the user a firm stand	located at the end of the handle	WS
5	drainage channel	ditch made of concrete	to drain spilled water far away from the well	slope from the pump away	WS
6	soak-away Pit	dug pit 1.00 x 1.00 x 0.80 m filled with stones/gravel	to prevent the place from becoming muddy and to prevent mosquito breeding	at the end of the drainage channel	WS
7	fencing	fence around the platform with door	to keep animals away from the well	can also be a hedge	WS +CD
8	lock	lock for door or chain and padlock for the hand pump	to control the use of the pump, to lock when damaged, to prevent further damage	dismantling the chain daily spoils the pump	CD
9	clean surroundings	not muddy, free of rubbish and high grass	to prevent containers, people and groundwater from getting dirty	continuous cleanliness is necessary	CD
10	a good caretaker	duties and behaviour see 8.33	to ensure proper use and implement the wishes of the community	the caretaker has technical and social duties	CD +WS

WS = Water Supply Department; CD = Community Development Department

If only one of these elements is missing or not well functioning, there will be problems in the daily operation of the hand pump.

B) Well Head of a Borehole

LAYOUT PLAN A-A

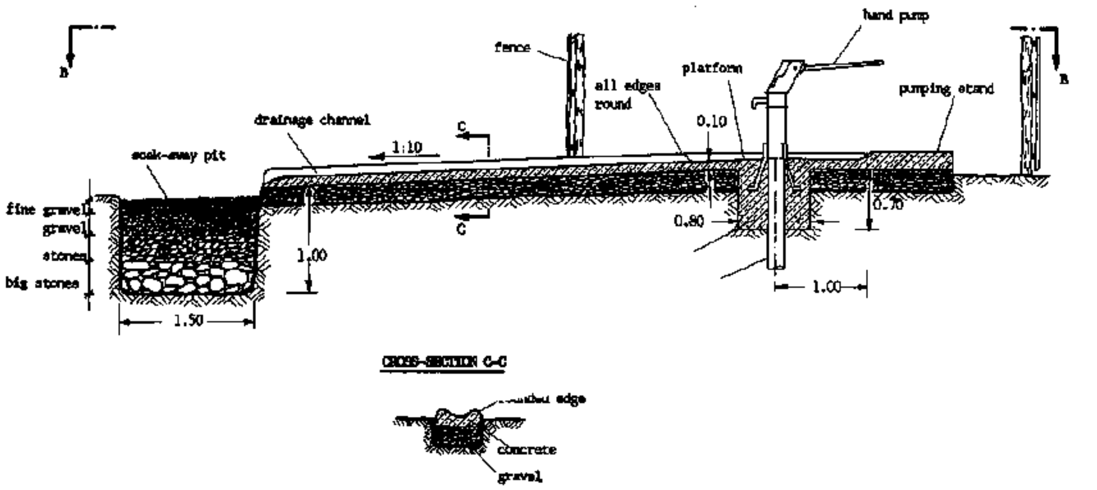

SCALE 1:50

LAYOUT PLAN B-B

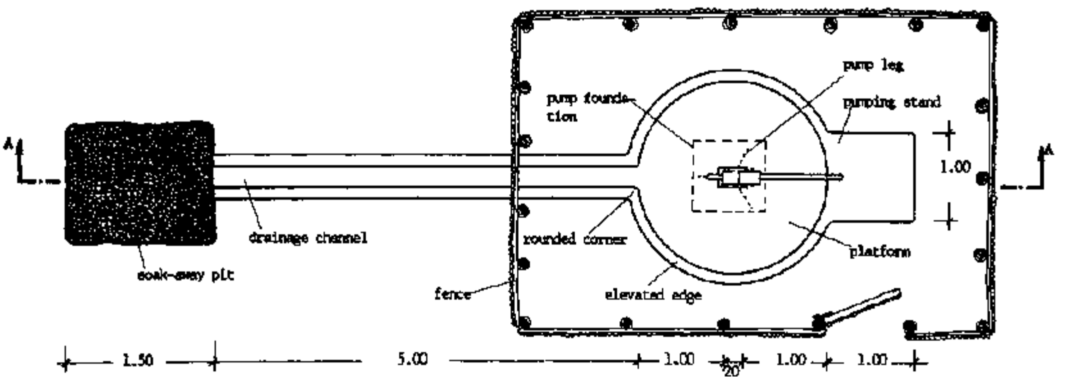

SCALE 1:50

C) Well Head of a Hand Dug Well

LAYOUT PLAN A-A

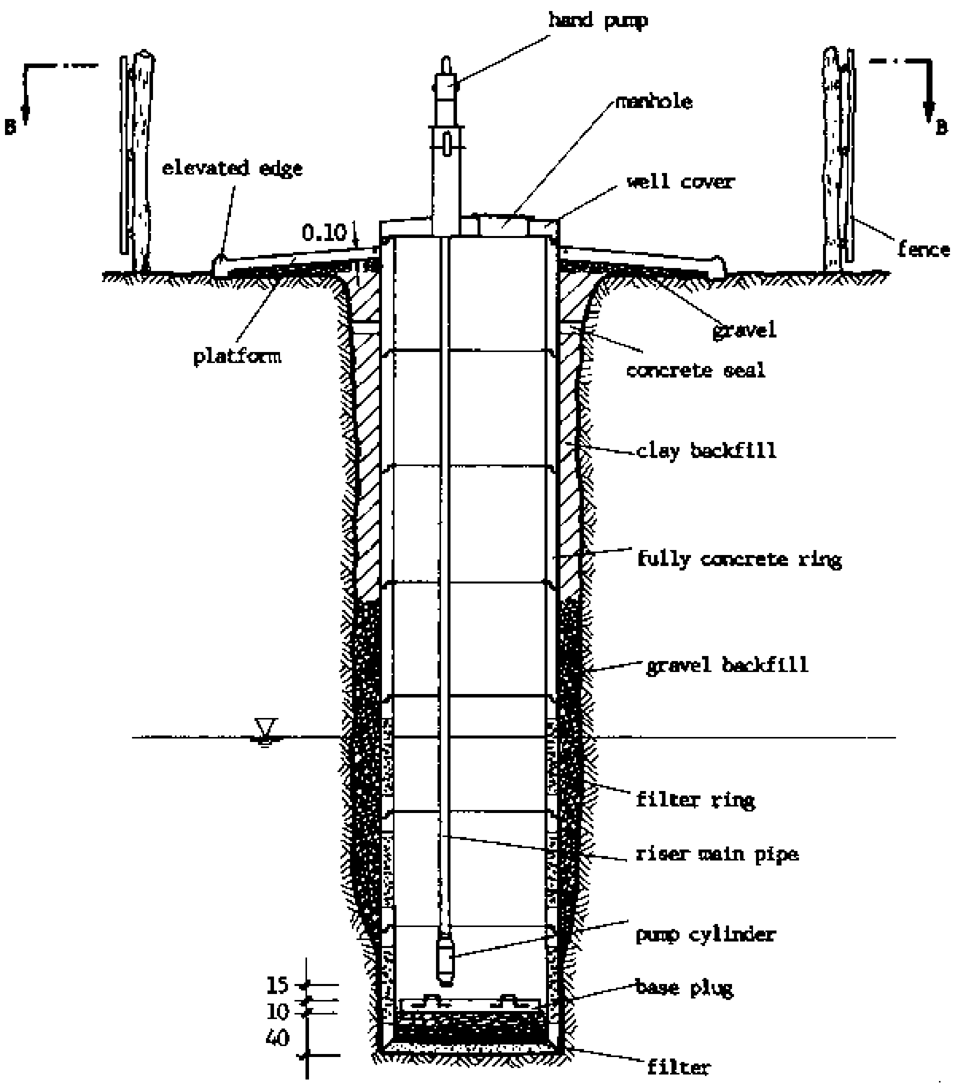

SCALE 1:50

LAYOUT PLAN B-B

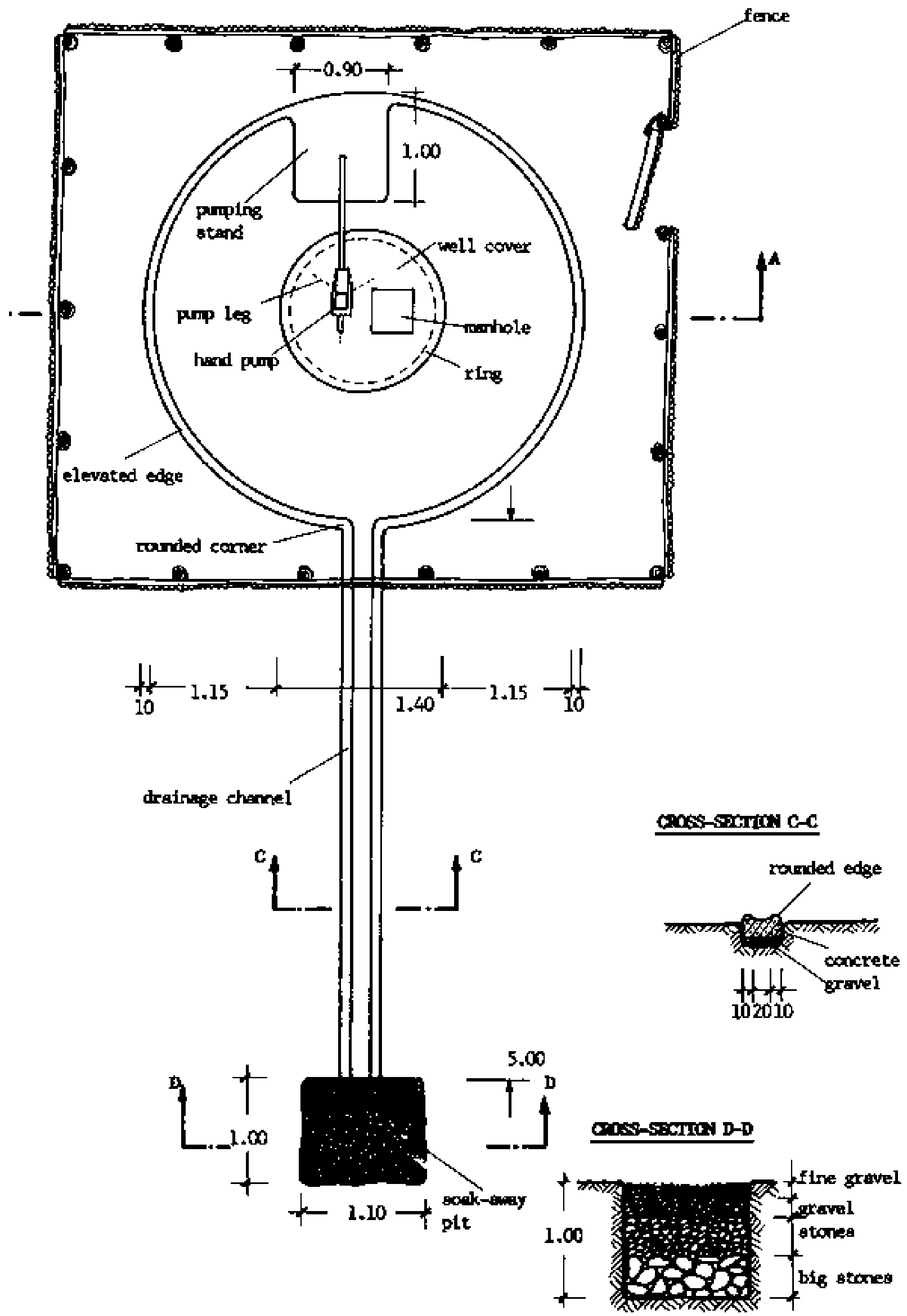

SCALE 1:50

8.20 Completion of a Well

After lowering the rings, the well still needs to be completed. A completed well is shown on 8.19/5f. For completing a well, follow these steps:

Step-by-Step Procedures:

No	Step	Reasons
1	After the well has been dug deep enough into the water and all the rings have been lowered, check if the rings are horizontal. If not, dig until the rings are horizontal, or balance the difference with mortar in the joints of the rings.	The rings need to be horizontal so that the cover will be placed horizontally as well.
2	Wash the rings inside and outside if necessary.	Mud and rests of old engine oil spoil the groundwater.
3	Backfill the rings with gravel in the bottom and clay in the top. Compact the backfill well layer by layer. A simple method for backfilling is described in 8.17/23f. See also 8.19/5.	Gravel backfill in the bottom allows the water to enter the well. Clay backfill in the top prevents contaminated surface water from entering the well. Not properly compacted backfill will settle later on and cause the platform to crack.
4	Sieve filter material (sand, fine gravel Ø 3-5 mm, rough gravel Ø 10-15 mm, and stones Ø 20-25 mm) and wash it. Use three sieves from mesh of different sizes.	Organic material in the well spoils the water.
	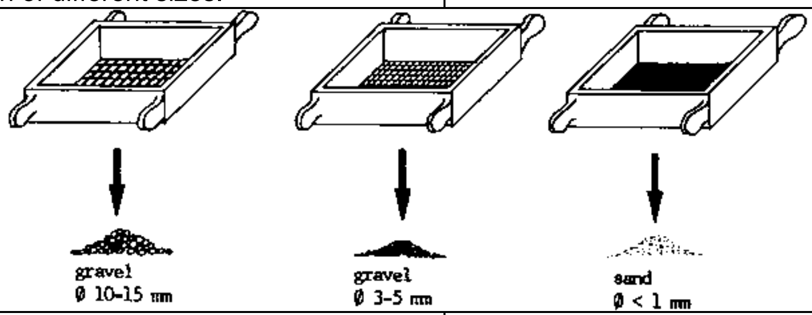	
5	Clean the bottom of the well from all mud and organic material and level it. For this work, dewatering of the well might be necessary. Pour one layer of sand evenly over it, afterwards a layer of fine gravel, then a layer of rough gravel and then a layer of stones. If the well has a very great yield, place a base plug on top. A base plug is a round slab with two handles from filter type concrete (mixture 1:1:4), slightly smaller than the diameter of the ring.	Rotting organic material spoils the water quality. For dewatering a well during construction see 8.25-28. The filter prevents sand and mud from entering the well and thus makes the water clear. A base plug is only necessary where the inflow is so strong that it might wash out the sand.

No	Step	Reasons

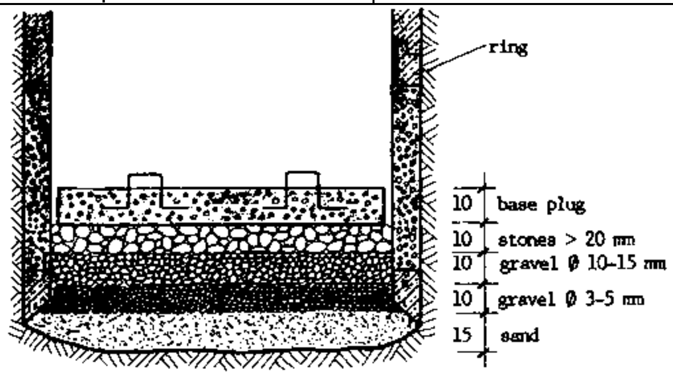

Scale 1:20

6	Remove all dirt, like grass, animals, etc. from the water.	Animals left in the well will die and decay, also grass and other dirt, and spoil the water.
7	Pump the well as much as possible.	Pumping eventually removes still dirty water and allows clean water to enter the well.
8	Place cement mortar on the rim of the top ring. Lift the well cover by a steel cable through the pump body and the man hole and let it slide over strong pipes until it is on top of the well. Place it on the top ring and adjust it until the top of the hand pump body is level into all directions.	The well cover seals the well from contamination and supports the hand pump. If the top of the hand pump body is level, the riser main pipes will hang vertically.

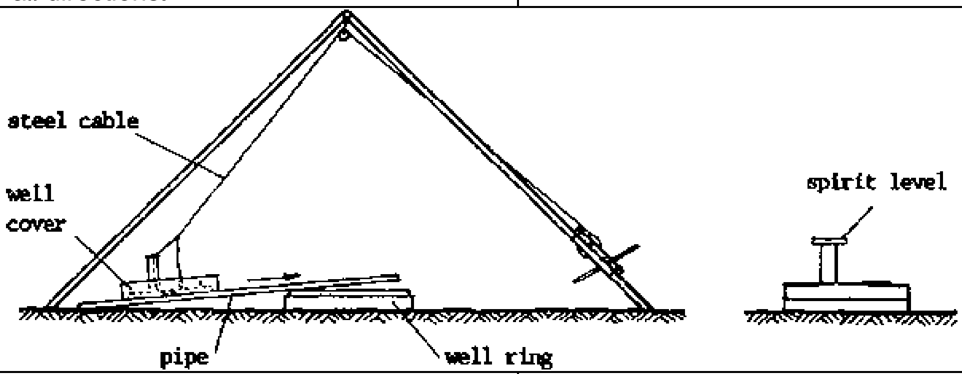

9	Carefully smear the space between the top ring and the cover with cement mortar.	The well must be properly sealed against dirty water and animals.
10	Pour a 10 cm thick layer of gravel around the well, Ø 3.00 m. It shall have a slight slope outwards.	The gravel is the foundation for the well apron.
11	Put one ring of reinforcement 0 6 mm around the top ring at 2 cm distance from it.	The reinforcement shall prevent cracks in the immediate neighbourhood of the well cover.
12	Pour concrete (mixture 1:3:4) over the gravel in a 10 cm thick layer as an apron of 3 to 4 m diameter. Compact it well. It shall have an outside slope. The top of the apron must be 2 cm lower than the lowest edge of the well cover. Build an elevated round edge of concrete around the apron. Cover the slab with cement mortar (mixture 1:4) and smooth the surface with the trowel. Sprinkle cement on top with a small sieve. All corners shall be rounded, because sharp edges and corners are more easily damaged than rounded ones.	The apron prevents spilled water from entering the ground and polluting the well. Also it prevents the surroundings of the well from becoming muddy. Thus the water containers will remain cleaner. The elevated edge helps collect spilled water and direct it to the drainage channel. It is easily possible to remove the well cover at any time because the apron is not connected to it.

No	Step	Reasons
	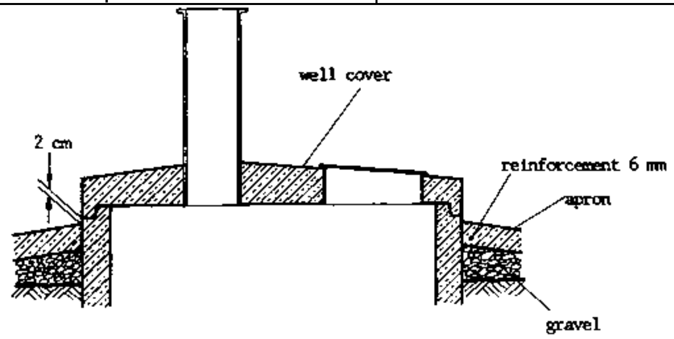 Scale 1:20	
13	Construct a drainage channel with slightly elevated round edges and sufficient slope (e.g. 1:10) in front of the spout. Dig a soak-away pit, 1 m deep, at the end of the drainage and fill it with stone layers in the opposite way as the filter (see 8.19/6).	The drainage channel transports spilled water far enough away from the well to prevent contamination. The spilled water can also be used for gardening or watering animals.
14	Cover the apron and drainage channel 3 hours after construction with wet sand. Keep them wet for one week.	Curing the concrete (= keeping it wet) makes it very strong and prevents cracks.
15	Fence the area around the well (at least an area of 10 m × 10 m) and construct a door. Alternatively, you can plant a hedge. Clean the well compound properly.	A fence prevents animals from polluting the area around the well and it makes the well easier to be controlled. The fence must be built before hand pump installation.
16	Install the hand pump. See 8.31.	Pulling water by a hand pump from a hand dug well prevents pollution of the water.
17	Disinfect the well. See 8.36	The well has been contaminated during construction. This needs to be eliminated before handing the well over to the community.
18	Conduct the operating instruction for the whole community where the importance of water, proper use, running and maintenance are discussed. See 8.39.	As water supply is a technical and social issue, community structures need to be built beside the construction

8.21 Safety Measures

Well construction is a dangerous work. We need to take great care to prevent risks as much as possible. Therefore, keep strictly to the following safety measures.

A) Safety through Stability of the Well

No	Safety Measure	Reasons
1	Watch the walls of the well constantly.	Slight changes in the appearance may suggest collapse.
2	Make dry sand in the well wet before digging.	Wet sand is more stable than dry sand.
3	Below water table, always work in the protection of a ring.	The soil below the water table is always much more unstable than above.
4	Never step on the very edge of a well without collar.	You could loosen a part of the soil and induce partial collapsing, endangering yourself and somebody working down in the well.
5	Dig drainage channels around the well head and cover the well with zinc sheets over nigths.	Rain water entering the well increases the danger of collapsing.

B) <u>Safety through Good Equipment and Cleanliness</u>

No	Safety Measure	Reasons
1	Check all equipment daily, like buckets, ropes, knots, pulleys, scaffold. Replace them if they show signs of old age or damage.	First signs of damage can easily develop into major breaks when under load. The scaffold must be very stable and well embedded into the ground soil.
2	Inspect tripod and winch before using them. Brake and safety device <u>must</u> work (see 8.17/17f).	Sudden release of load causes the winch handles to turn with terrible speed and can cause bad injuries. Failure of the tripod can cause bad injuries or kill somebody, too.
3	Tie the pulleys properly to the scaffold.	The pulley can get untied under load.
4	Keep the area around the well free from gravel, stones and unnecessary tools. Clean each day.	Small items can fall accidentally into the well and harm the diggers.

No	Safety Measure	Reasons
1	Always wear a safety helmet when entering the well.	The helmet prevents small particles falling down from damaging your head.
2	Enter a well on a sitting wood, a bosun's chair, or over a ladder. Sit properly on the sitting wood.	Other methods of entering are unsafe because you can easily slip.
	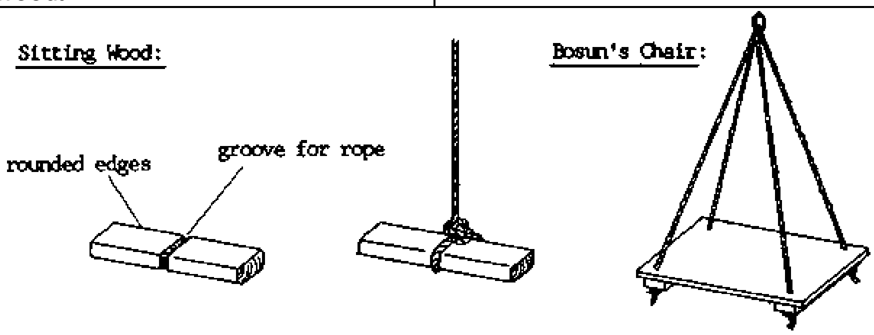	
3	Check the bottom of the well with a stick for snakes before you enter the water. Keep the surroundings of the well free from vegetation. When meeting a snake, do not panic, but move slowly.	Sometimes there are snakes in the well.
	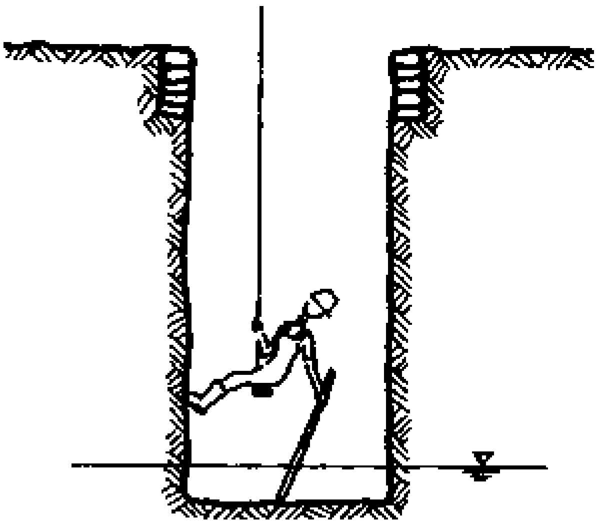	

No	Safety Measure	Reasons
4	Pull the rope evenly with enough people. Avoid bumping against the walls.	Abrupt pulling can cause swinging of the bucket and puts a bigger load on the rope. Enough people prevent accidents if one of them fails during pulling. Buckets bumping against the wall can cause collapse and result in spilling the contents.
5	Tie shovels, crowbars, etc. properly when lowering them with a bucket according to the drawing.	Otherwise heavy tools can make the bucket tip over.
	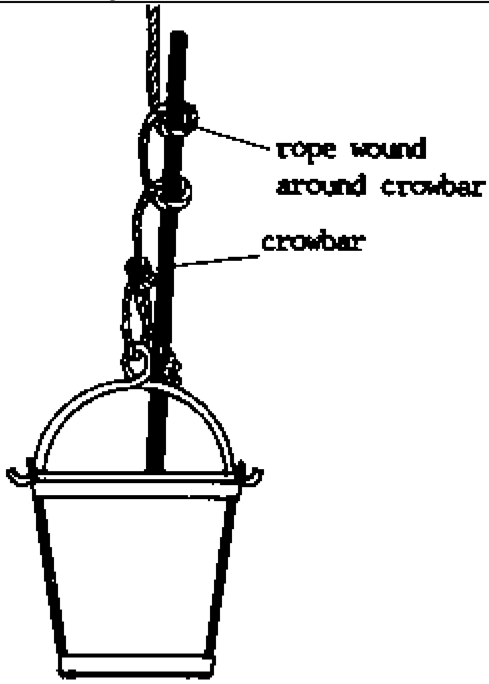	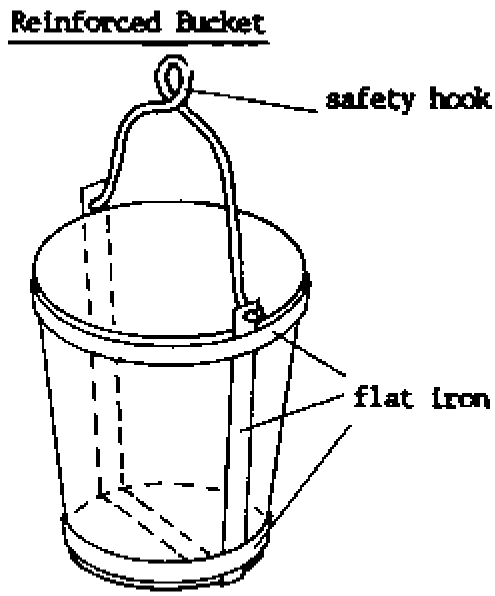
6	Do not overload buckets. Use buckets reinforced with flat iron.	Overloaded buckets can tilt easily and the rope wears out quicker.
7	Never urinate or defaecate inside the well, but exit the well for these purposes.	Excreta will contaminate the water of the well.
8	Do not let your fingers enter the pulley when being pulled up.	The pulley can hurt your hand badly.
	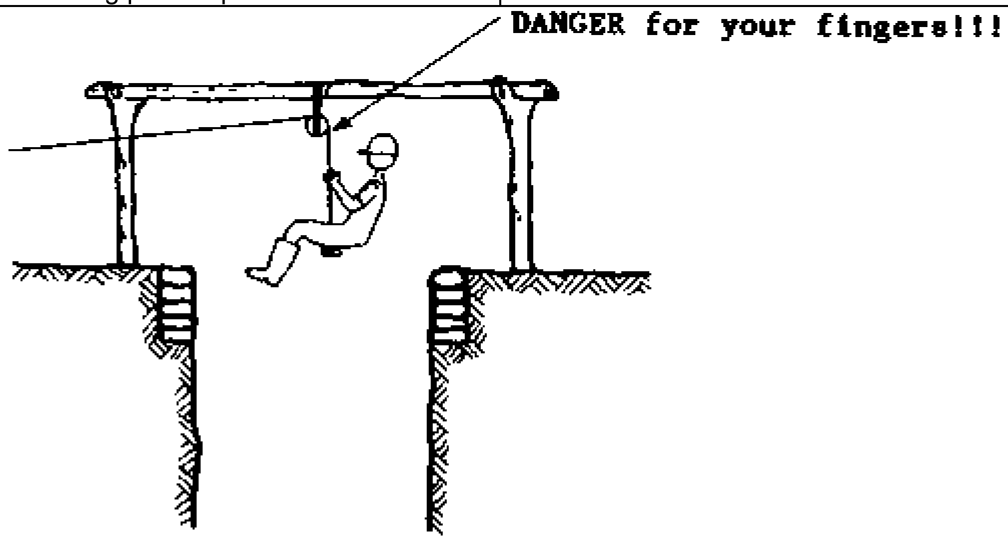	

No	Safety Measure	Reasons
9	If you get wet during work in the well, immediately take off the wet clothes after leaving the well and put on dry ones. Take an extra set of clothes with you for this purpose. Drink enough water. Women should take special care.	Wet clothes on the body, especially if exposed to wind or draft, can cause sicknesses of the kidneys, urinary tract and female reproductive organs. The bad effects are not felt immediately, only later.
10	Keep the danger of bad air in mind.	See 8.22
11	Use the safety belt in any dangerous situation like bad air, work under water, etc.	See 8.22

D) Safety through Good Communication

No	Safety Measure	Reasons
1	Solve any quarrels between labourers before continuing work.	Unsettled quarrels make people careless and inattentive and cause danger.
2	Somebody at the well head must be assigned to constantly watch the. diggers down, to communicate between diggers and labourers above, and to direct the work.	The diggers at the bottom are helpless in the face of problems unless somebody can hear them.
3	Use clear signals according to the drawing:	Clear signals, known to everybody, prevent misunderstanding.
	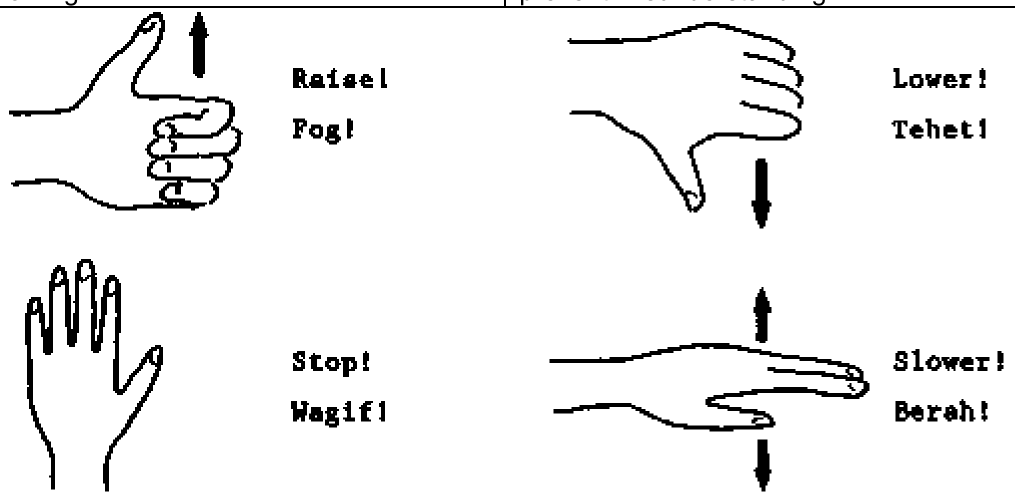	
4	Keep passers-by and children away from the well (if necessary by an improvised fence).	Curious people want to watch, but do not know the dangers. They can endanger themselves and the workers

8.22 Ventilation in Wells

Air is the first priority physical need of any human being. Without air human beings suffocate and die within a few minutes. Therefore, it is most important to take care that the workers down a well have a sufficient supply of air. There are cases where several people have died in a well because of bad air.

A) Possible Reasons for Bad Air Conditions in a Well

The following reasons can cause bad air conditions in a well:

1. The ground soil releases dangerous gases (suffocating, explosive or poisonous gases).

2. The well is very deep and narrow and the natural ventilation is not sufficient.

3. The well dried out and no natural ventilation through evaporation takes place.

4. The workers stayed long time down in a deep well and, thus, consumed the oxygen and increased the carbon dioxide content by exhalation.

5. Fumes from the exhaust pipe of a generator, car or pump descend into a well.

6. The well is closed by a cover and has only a small man hole.

7. Something was burnt in a well.

8. Rotting organic material can cause dangerous gases.

Be very careful in any of these cases!

B) Methods to Check the Air Conditions in a Well

1. Check the air with the candle test. Fix a candle in a bucket, light it and gently let it down the well shaft. If the candle burns until the bottom, the air conditions can be expected to be reasonable. The air is bad if the candle extinguishes. Carry out the candle test before starting work on the site in any well deeper than 10 m. Carry out this test daily in any well deeper than 30 m.

2. Check the air for bad, foul smell (but not all kinds of bad air have a bad smell!).

3. Check the air with specialized instruments. These might not be available.

Use any of the methods available at the site.

C) Possibilities to Improve the Air in a Well

To improve the air in a well, you may use one or more of the following methods:

1. Use an airblower with a hose, pumping fresh air into the well. The hose shall reach until 1-2 m above the workers to avoid catching a cold.

2. Use a small compressor with hose to blow air into the well. The hose shall end high above the workers.

3. Use a blacksmith's fan with a hose.

4. Sprinkle water into the well.

5. Raise and lower a basket or a bundle of twigs quickly and several times.

6. Make sure that the well has always a bit of water.

Use the method(s) available and appropriate and check the air afterwards again. Repeat if necessary.

D) Other Precaution Measures

1. In case of any doubt about the air conditions, tie the worker entering the well to the rope. Even if she/he falls unconscious, she/he can be pulled out before serious damage. Do not fear people laughing about such precautions, because you are just protecting your live. You can tie somebody with ordinary rope or use a safety belt.

How to Tie the Rope:

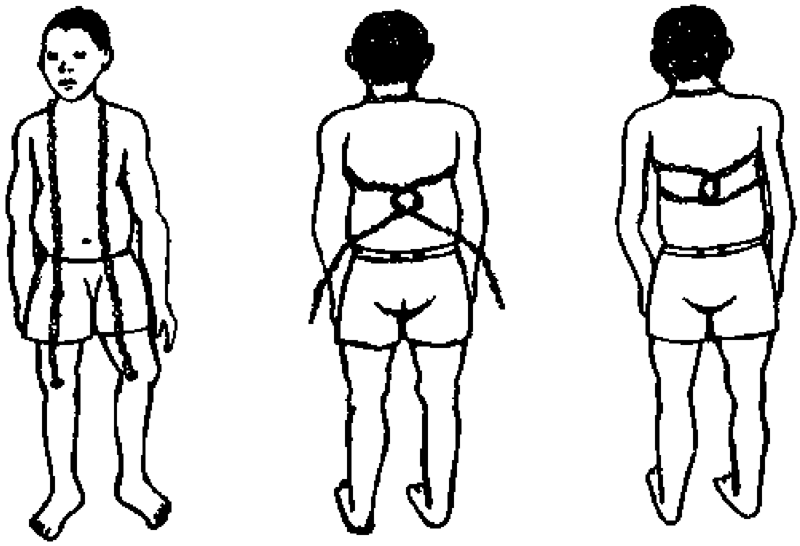

How to Wear the Rope

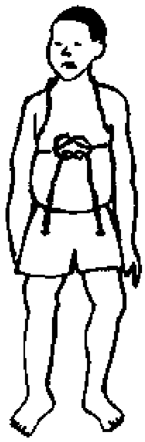

How to Wear the Safety Belt

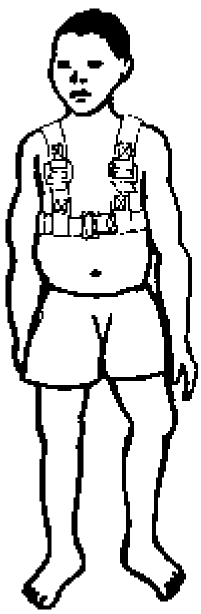

2. Somebody at the well mouth has to watch the workers at the bottom constantly and carefully.

3. Allow workers to work only for short periods (1 to 2 hours, maximal 3 hours) down in the well. Exchange them afterwards.

4. Place a generator, car or another machine as far from the well as possible, preferably downhill. The exhaust pipe should point away from the well. Exhaust fumes are heavy and, therefore, easily descend into a well.

5. For respiratory emergency see 1.7/3.

8.23 Ropes and Knots

A rope can transmit tension, but not compression. In other words, you can pull with a rope, but never push. Ropes are flexible and can be wound up for storage.

A) Types of Ropes

Three different kinds of ropes can be used in well construction:

No	Type of Rope	Usual Ø for well constr.	Pulled by	Strength	Protection of Rope End	Maintenance	Used for
1	steel rope or steel cable	10 mm	winch, difficult to pull by hand	very strong	welding (gas welding) or braiding	- always roll the cable properly - prevent it from remaining wet - inspect it regularly	heavy loads like rings in permanent installation
2	nylon rope	10 mm	by hand, however, it gets hot and is slippery and difficult to hold	strong	burning (melting) and knot	- carefully roll it - inspect it regularly	any quick work in between
3	manila or hemp or sisal rope	25 mm	by hand, does not get hot	strong	tying with string and knot	- let it dry if it gets wet - carefully roll it - inspect it regularly	lowering and lifting people and buckets into the well

Handle ropes according to these guidelines:

- New ropes tend to twist when first loaded. Pay attention!

- Provide the ends of ropes with some protection before you start to use them. The rope looses strength when untwisted.

- The strength of ropes is reduced by about half when they get old.

- Avoid friction between rope and pulley or any other item.

- Check the ropes every morning for weak spots.

- If one of the three fibres of a rope is broken at one spot only, the rope must not be used any more for heavy loads.

- Store rope in a dry, airy place, rolled up or in a box and protected from rats.

- Steel cable is a special kind of rope. How to handle it is explained in detail in 8.17/16.

B) Types of Knots

Nylon and sisal ropes are connected with knots. Use the following kinds of knots which are quick to make, safe to use, and easy to untie. Practice them until you know them by heart.

1. Bowline

for tying buckets, etc.

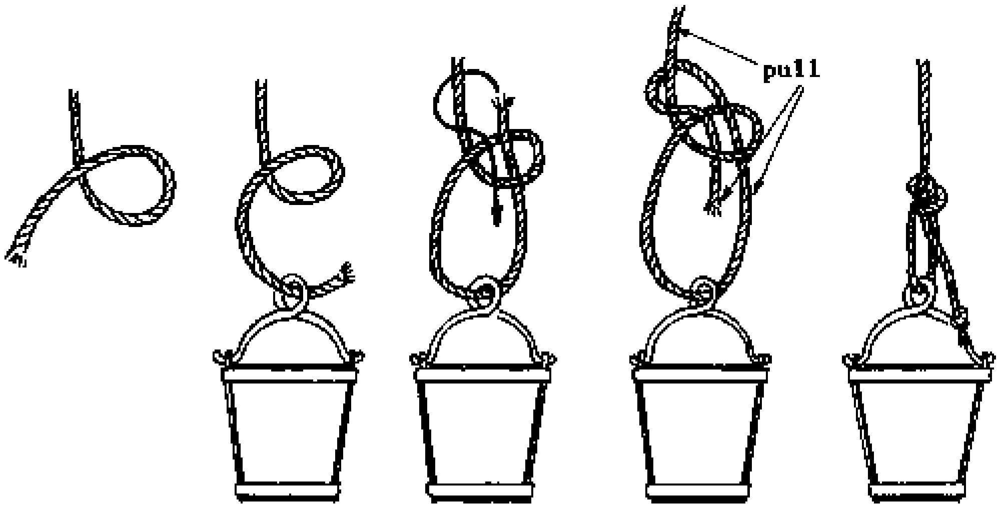

2. Square Knot

for connecting ropes

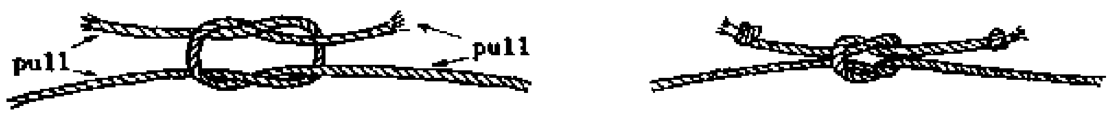

Steel cable cannot be connected with knots. The ends of steel cable have to be provided with eyes; the eyes are then connected with D-shackles or connecting links. For details see 8.17/16.

8.24 Types of Pumps and Other Water Lifting Devices

This chapter gives a rough overview about the diversity of pumps and other water lifting devices.

A pump is a device capable of transporting a fluid (or gas) by using energy supplied from outside.

A) Distinction of Water Lifting Devices and Pumps

Pumps and other water lifting devices can be distinguished according to

1. source of energy used,
2. principle of transporting the fluid,
3. type of fluid transported,
4. maximum lift.

1. Source of Energy Used	Examples (see 8.24/6ff)
- human power	No. 1 to 14, 16, 17, 18, 19, 22;
- animal power	donkeys pulling water from a well
- solar energy	solar pump
- wind energy	No. 15;
- water energy	No. 21, 26;
- electrical energy	No. 30, 31;
- fossil fuel energy (combustion engine)	diesel and petrol pumps such as No. 20, 23, 24, 25, 27, 28, 29, 32;

2. Principle of Transporting the Fluid	
- bucket	No. 1 to 5;
- continuous rope and bucket system	No. 6 to 8;
- piston pump (positive displacement)	No. 9 to 15, 18, 28;
- membrane pump (positive displacement)	No. 16, 17, 19, 20; blacksmith's belly;
- centrifugal pump	No. 29 to 31; airblower; "fan";
- impulse pump	No. 21;
- ejector pump	No. 32;
- helical rotor pump	No. 22 to 24;
- coil pump	No. 26;
- rotary pump	No. 25, 27;

3. Type of Fluid Transported	
- clear, clean water	No. 1 to 32;
- dirty water	No. 1 to 8, 16, 17, 19 to 26, 29, 30;
- mud	No. 24 and special pumps;
- fuel or oil	fuel or oil pump in the car;
- air	airblower;

4. Maximum Lift (=Head)

The head is the vertical distance between the intake level and the discharge level:

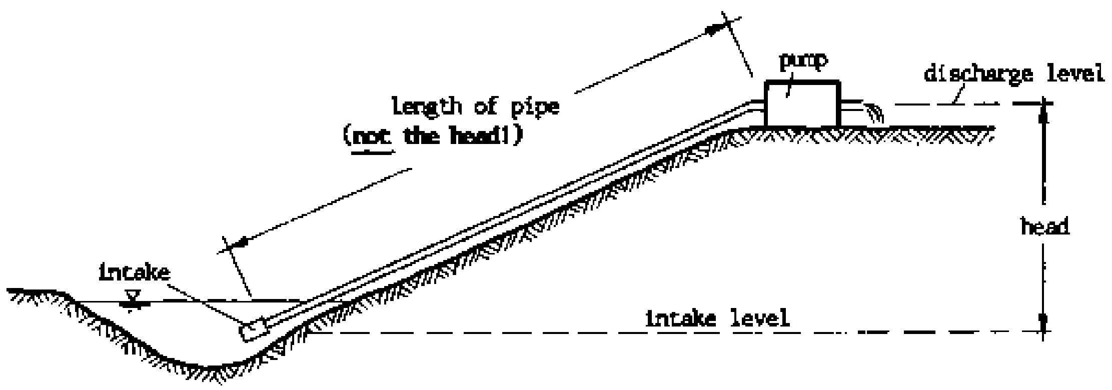

- shallow well pump = suction pump (head: 0 to 7 m)	No. 2, 9, 19, 20, 24, 25, 26,29;
- deep well pump = lift pump (head: 0 to 7 m and deeper)	No. 1, 3 to 8,10 to 18, 21, 22, 23, 27, 28, 30, 31, 32;

B) Work of a Pump

A pump has to overcome

- the gravitational forces of the water,
- the friction in the pump and the pipes,
- the inertia of the moving parts of the pump.

C) Possible Reasons for Poor Performance of a Pump

There are many different reasons why a pump is not performing well in a certain situation. It is important to identify the exact reason.

Possible reasons are listed below:

- The pump is of poor quality.

- The pump is of poor design.

- The pump is not suitable for the given situation.

- The pump does not work in its optimal range (e.g., the head is too high after the water table has dropped).

- The pump is not being used properly.

- The pump is not maintained regularly (cleaning, greasing, etc.).

- The pump is unduly exposed to sun, rain, dust, etc.

- The pump is overused.

- The pump was not repaired properly after a break-down.

- Supply of spare parts is difficult because there are too many different types of pumps in the region.

D) Criteria for Selecting the Right Pump

To avoid poor performance, it is important to select the right type of pump for a specific task. The following questions will help you to identify the specifications for the pump you need for a specific purpose. First, answer them all, then check if the proposed pump fulfils these requirements.

1. Which head do you want to pump the water (in metres)?

2. What yield do you require (in m^3/h or l/sec)?

3. What type of water should be pumped (clear, sandy or muddy water)?

4. What source should the water be pumped from (hand dug well, borehole, river)?

5. For how long should water be pumped subsequently: How many hours a day; the whole day; sometimes; daily; for how many months?

6. What kind of energy is available and should run the pump (human, animal, diesel, petrol, electricity, etc.)?

7. What kind of spare parts are available and where?

8. What kind of maintenance facilities are necessary and available?

9. What kind of operating skills are necessary and available?

10. Do you require that the pump ensures that the water is not polluted?

11. What level of technology is suitable?

12. Where can you get the required pump from?

13. What kind of pump would be accepted by the future users?

14. How much money are you able and ready to invest in the pump (including running and maintenance costs)?

E) Comparison of Different Pumps

In the following table a number of pumps are compared. The necessary information is compiled to answer the questions asked under “D) Criteria for Selecting the Right Pump”. The drawings under F illustrate the different pumps.

COMPARISON OF DIFFERENT PUMPS

Pump	Drawing No.	Source of Energy	Principle of Fluid Transport	Type of Fluid	Lift from Water to Pump	Lift from Pump to Higher Level	Yield in m^3/hour	Well Ø required	Possibility of Contamination	Costs	Operation and Maintenance	Suitable Areas
unprotected bucket system	1, 5	human, animal	pulling by rope	clean or dirty water	0-50 m	-	0.05-1	large Ø (100 cm)	yes	low	very simple	remote areas
shaduf	2	human	pulling by counterweight	clean or dirty water	0-5 m	-	"	"	"	"	simple	with simple maintenance facilities
protected bucket system	3, 4	"	pulling by rope	clean water	0-10 m	-	"	"	avoidable	"	"	"
chain, rope and washer pump, bucket pump	6, 7, 8	"	"	"	0-10 m	-	2-3	"	"	reasonable	"	"
suction hand pump with piston	9	"	piston, pos. displacement	"	0-7 m	-	2	borehole or large diameter	"	"	reasonable	where maintenance secured
suction hand pump for irrigation with piston	9	"	"	clean or dirty water	0-7 m	-	8	large Ø (100 cm)	yes	"	"	"
direct action hand pump	10	"	"	clean water	0-25 m	-	2	borehole or large diameter	avoidable	"	"	"
piston hand pump	11, 12, 13, 14	"	"	"	0-80 m	only No 14	1	"	"	"	"	"
diaphragm hand pump	19	human	membrane	clean or dirty water	0-7 m	-	10	large Ø (100 cm)	yes	reasonable	simple	where maintenance secured
hydraulic ram	21	water	impulse	clean water	0	60-80 m	depending on ram	not used in wells	avoidable	"	"	in small river with dam

Pump	Drawing No.	Source of Energy	Principle of Fluid Transport	Type of Fluid	Lift from Water to Pump	Lift from Pump to Higher Level	Yield in m^3/hour	Well Ø required	Possibility of Contamination	Costs	Operation and Maintenance	Suitable Areas
helical rotor pump	22, 23	human, fuel	helical rotor	water	0-30 m	-	depending on pump	large Ø or boreholes	avoidable	high	skilled attention	where fuel and maintenance available
coil pump	26	water	compression of air	clean or dirty water	0	6-7 m	1-2	not used in wells	yes	reasonable	simple	on big rivers (for irrigation)
centrifugal pump	29	fuel	centrifugal	depending on pump	0-7 m	20-30 m	high, depending on pump	borehole or large diameter	avoidable	high	skilled attention	where fuel and maintenance available
submersible pump	30, 31	electrical	“	“	0	8-300 m	“	“	“	“	“	“
jet pump	32	“	centrifugal, ejector	clean water	0-50 m	0-20 m	“	borehole	“	“	“	“

F) Drawings of Different Pump Types

In the following, drawings are given of a number of pumps, compiled as teaching material. They shall give an impression about the diversity of pump types. Some of them will need further explanation by a teacher or further study in the literature (see in the bibliography especially No. 18 from which many pictures were taken). A few pump types are described in more detail in later chapters.

Illustrations are given for the following pumps and water lifting devices:

1. Unprotected Bucket System
2. Counterweighted Bailer (=Shaduf)
3. Protected Bucket System with Trough
4. Protected Bucket System with Hose
5. Bailer for Boreholes
6. Bucket Pump
7. Chain and Washer Pump
8. Rope and Washer Pump
9. Suction Hand Pump with Piston
10. Direct Action Hand Pump with Cylinder
11. Piston Hand Pump with Chain Link
12. Piston Hand Pump with Uganda Type Handle
13. Piston Hand Pump with Fly-Wheel
14. Force Pump
15. Wind Pump
16. Vergnet or Mengin Pump
17. Petro Pump
18. Blair Pump
19. Diaphragm Hand Pump
20. Diaphragm Engine Pump
21. Hydraulic Ram
22. Helical Rotor Hand Pump
23. Helical Rotor Engine Pump
24. Archimedean Water Screw
25. Water Wheel
26. Coil Pump
27. Rotary Pump
28. Piston Engine Pump
29. Centrifugal Pump
30. Submersible Pump for Dirty Water
31. Submersible Pump for Clean Water
32. Jet Pump

1. Unprotected Bucket System

rope and bucket alone, or with wooden roller, or pulley, or windlass.

Rope and Bucket alone:

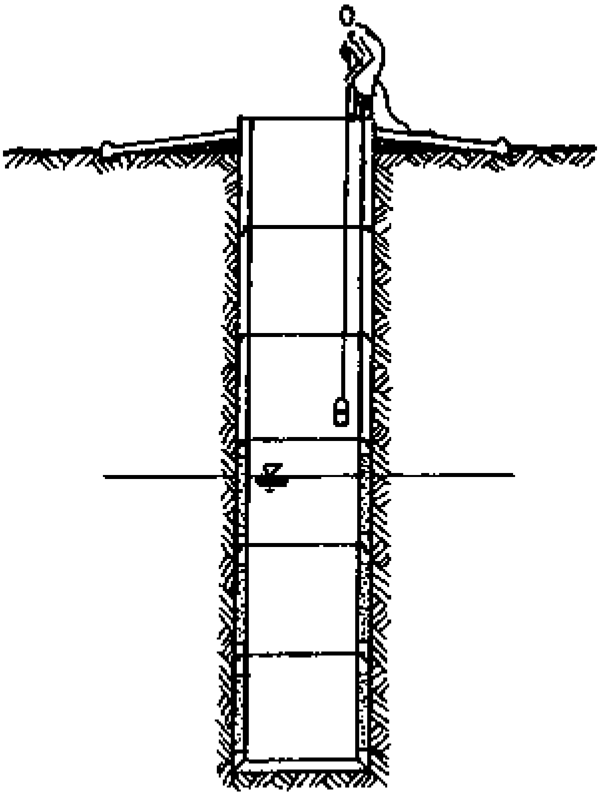

Wooden Rollers:

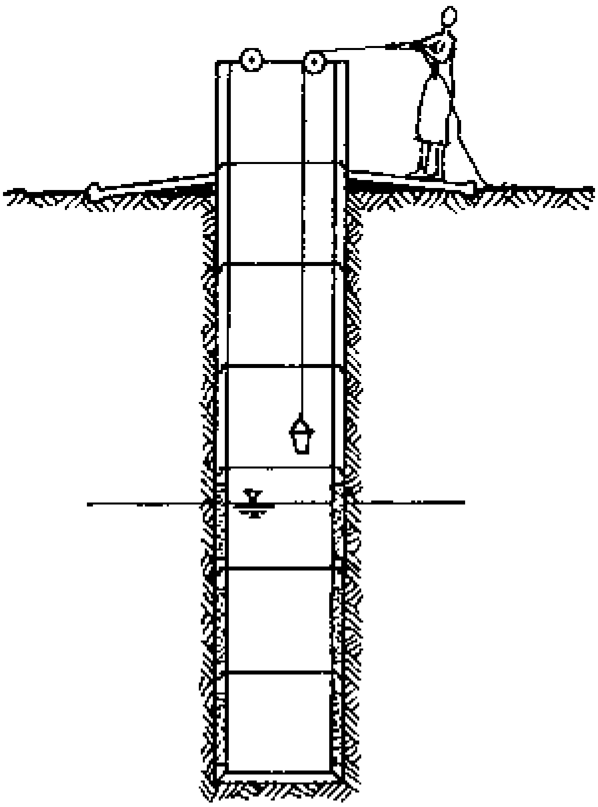

Pulley:

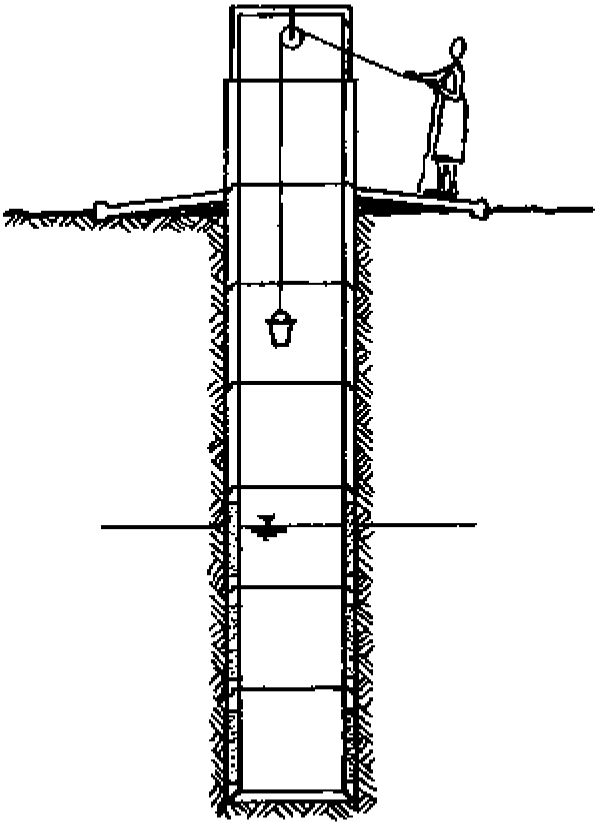

Windlass:

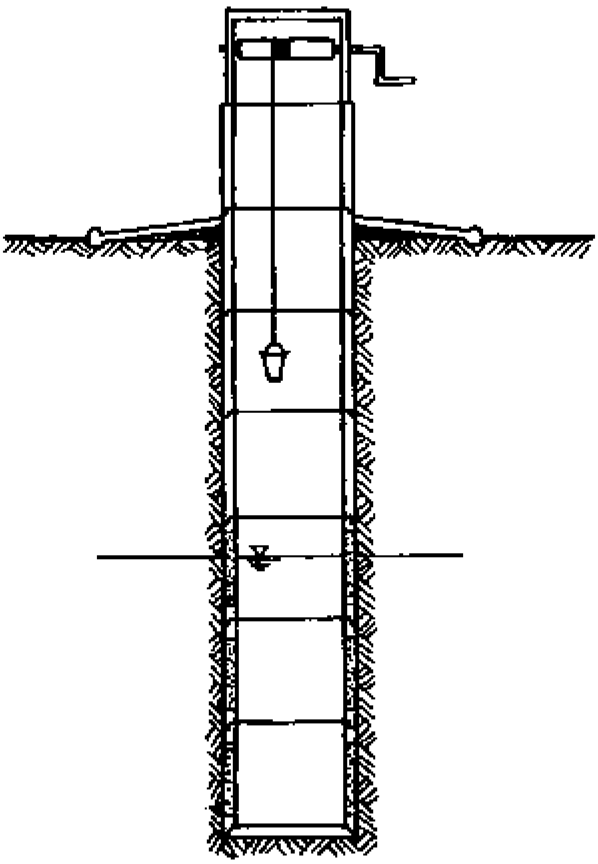

SCALE 1:80

2. <u>Counterweighted Bailer (= Shaduf)</u>

with scaffold, counterbalance weigh, rope and bucket.

CROSS-SECTION **SIDE-VIEW**

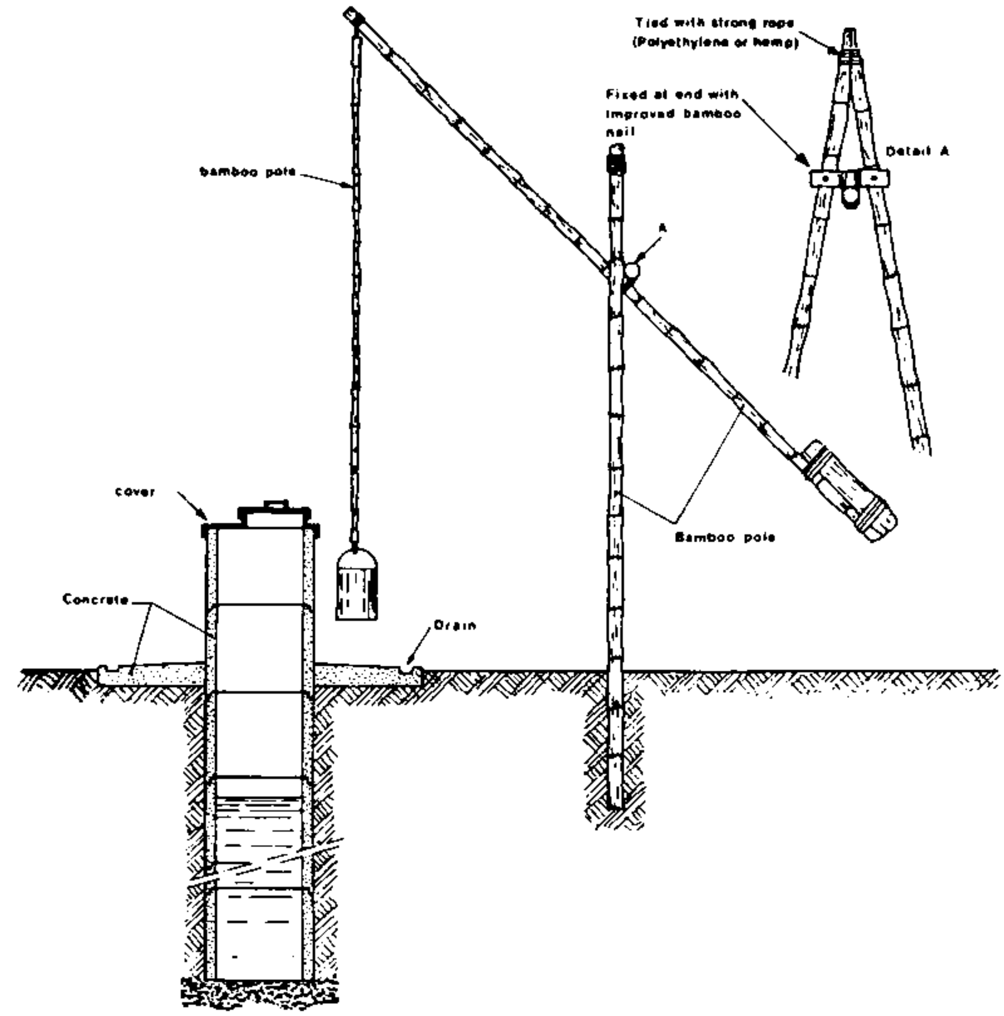

LAYOUT PLAN

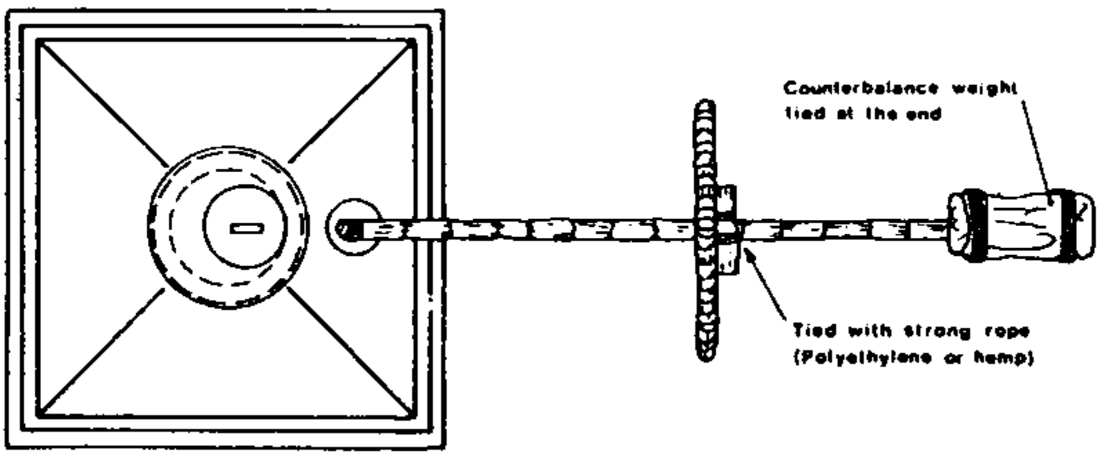

3. <u>Protected Bucket System with Trough</u>

with windlass, rope, bucket, trough, outlet, and protection against contamination.

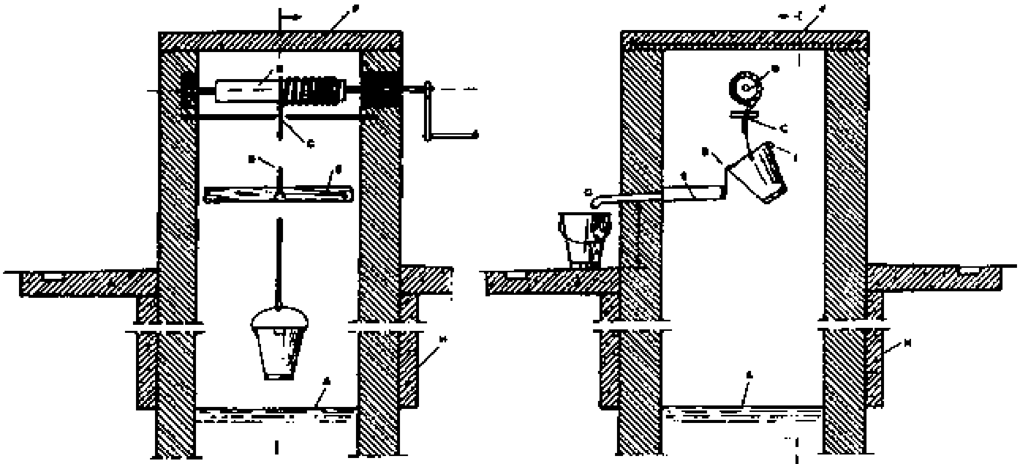

Schematic Illustration

A = water level in well
B = windlass
C = guide hole for rope
D = stop hook
E = trough
F = tight cover, removable
G = discharge opening
H = compacted clay or concrete grout
I = weight attached to top side of bucket to make it tilt when lowered onto water surface

4. <u>Protected Bucket System with Hose</u>

with windlass, rope, bucket, hose, outlet and protection against contamination.

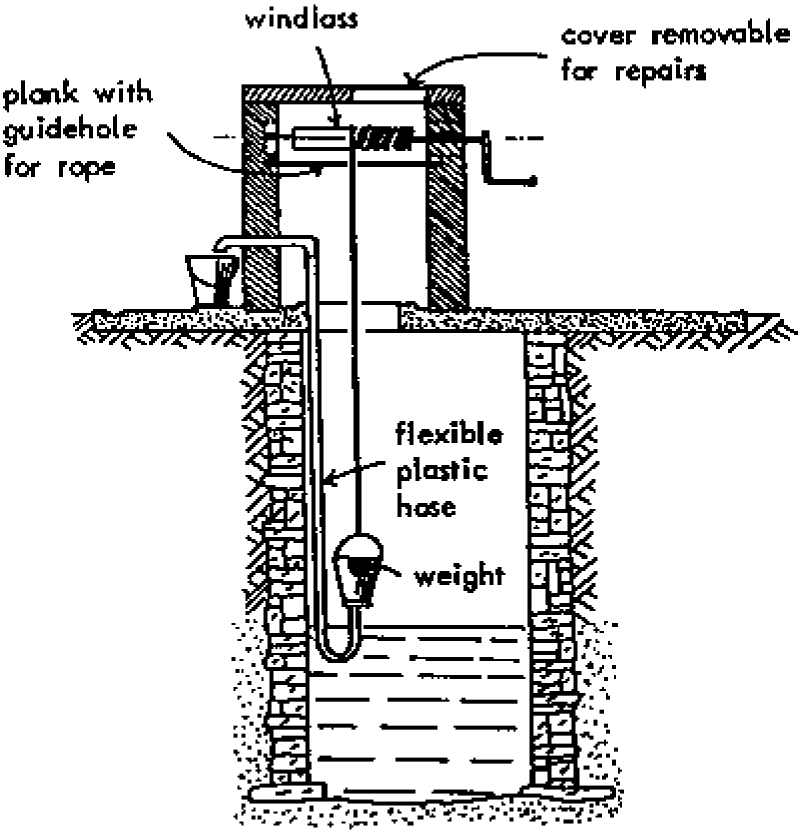

Schematic Illustration

5. Bailer for Boreholes with windlass, chain, bailer and holder to release the valve; see also 8.13/5.

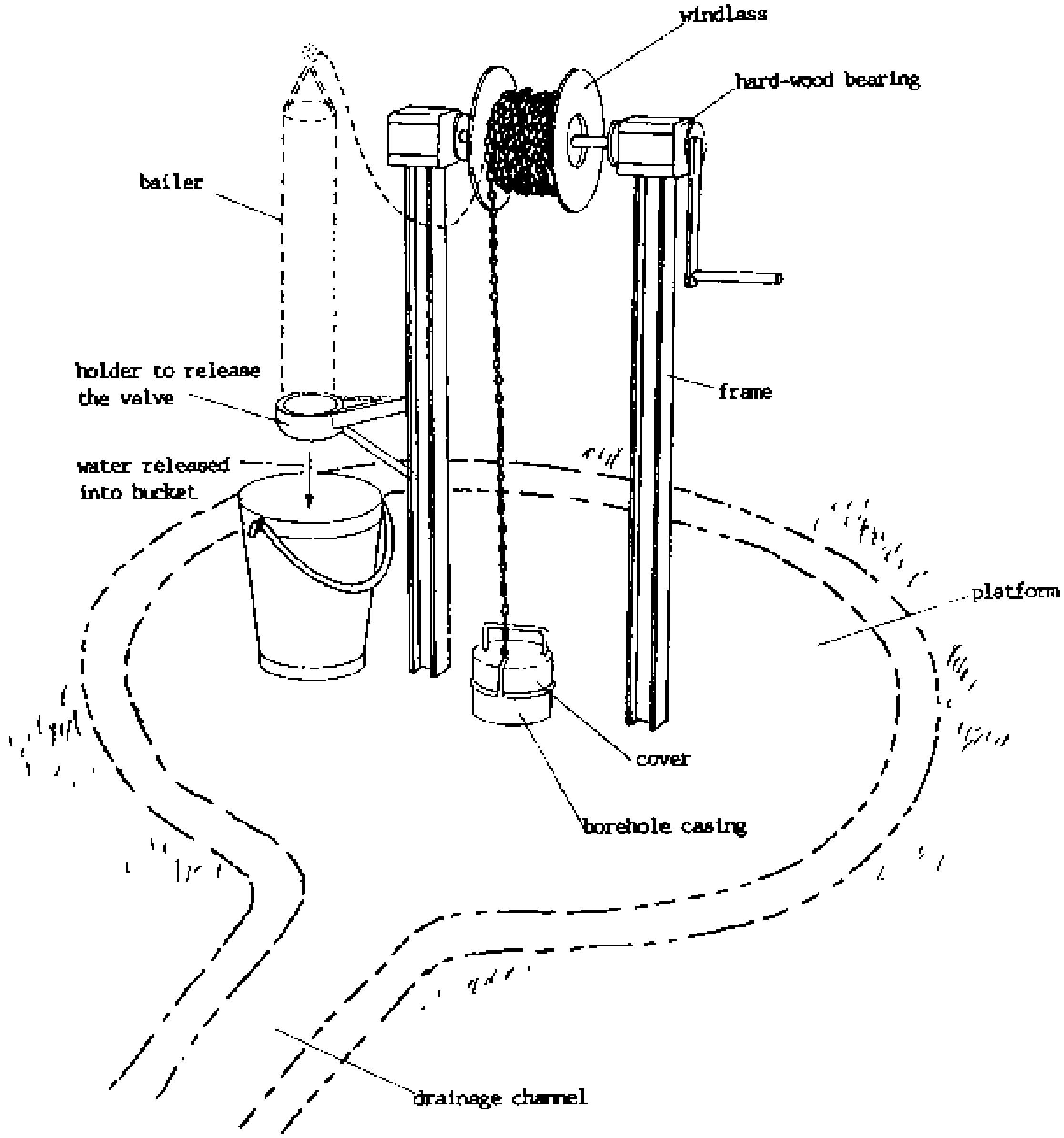

6. Bucket Pump with windlass, buckets attached to rope, outlet and protection against contamination.

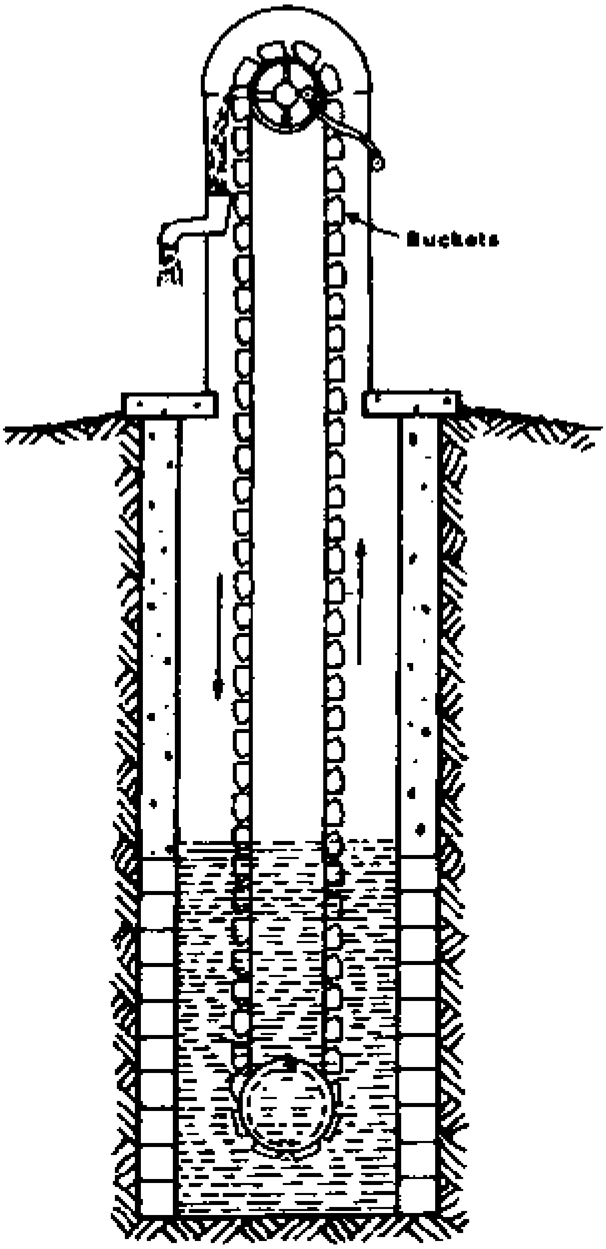

7. Chain and Washer Pump with windlass, riser main pipe, rubber washers, water tank, outlet, and protection against contamination.

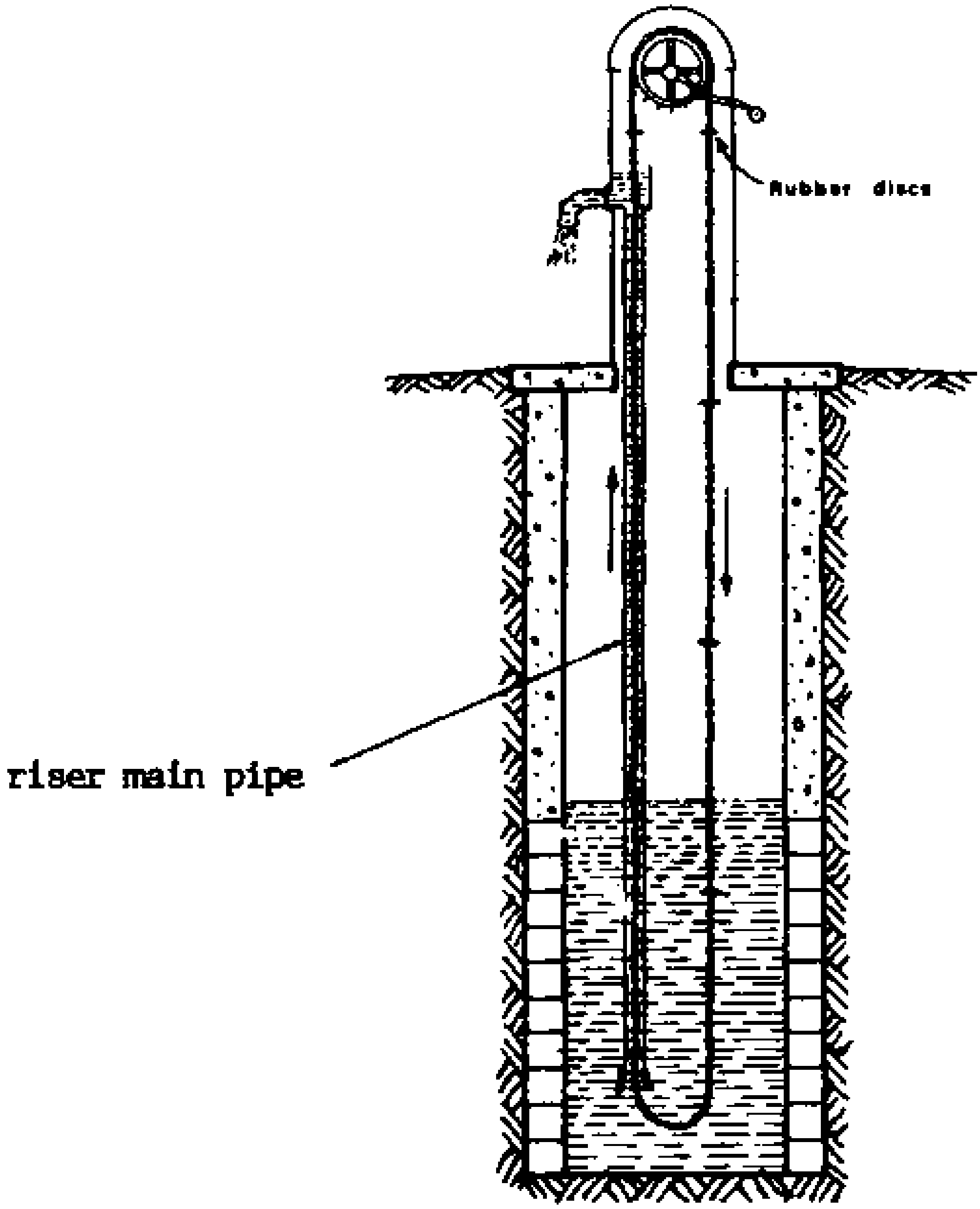

8. Rope and Washer Pump with windlass, riser main pipe, rope and rubber washers, basin from chicken wire and cement mortar, outlet, and protection against contamination.

CROSS-SECTION A-A

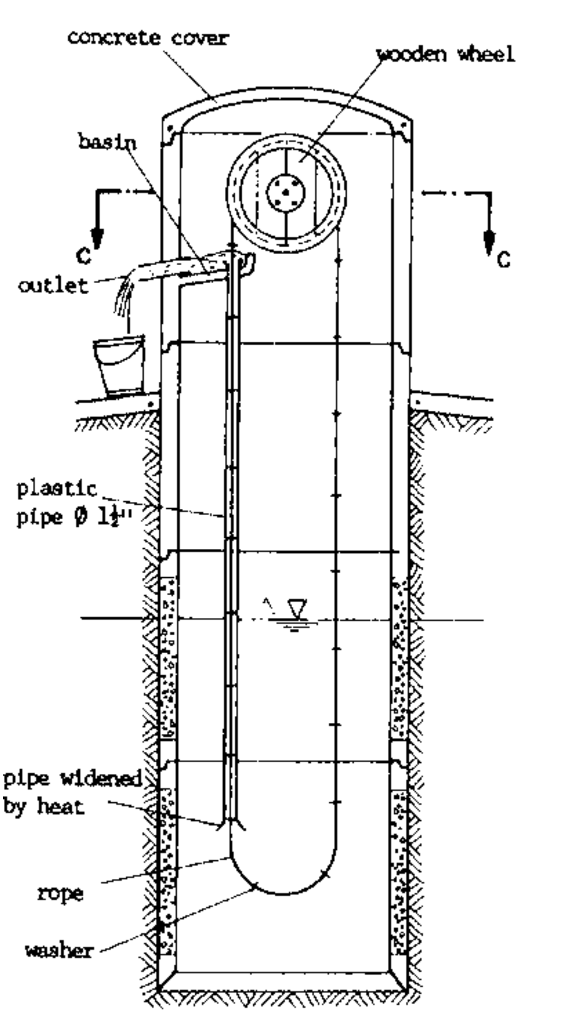

CROSS-SECTION B-B

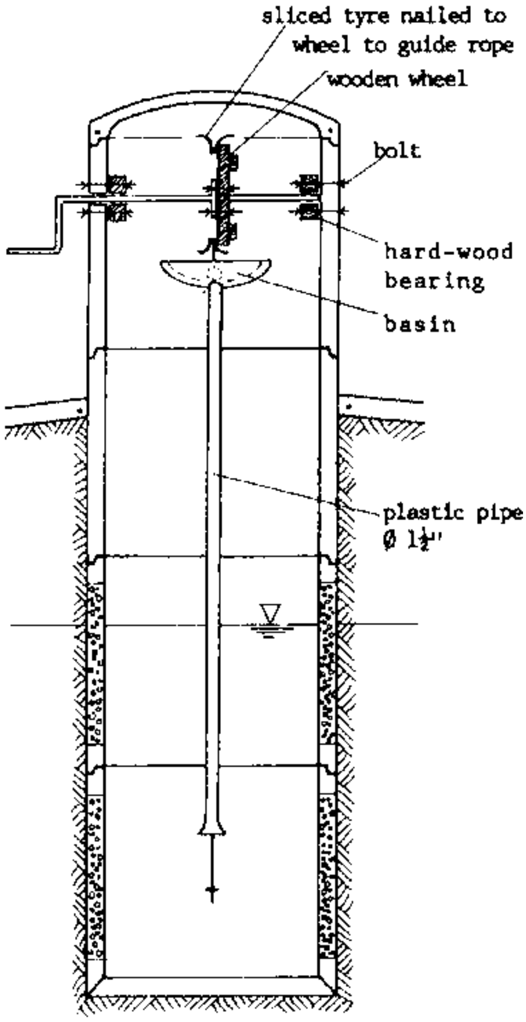

LAYOUT PLAN C-C

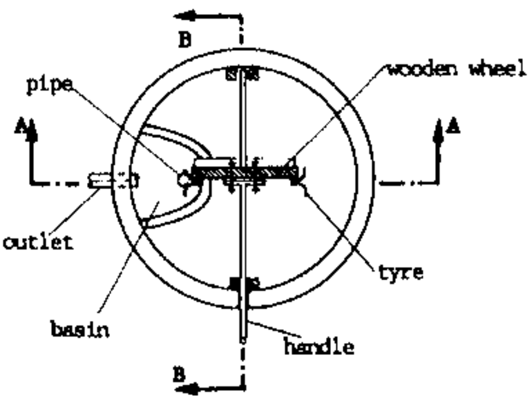

DETAIL: ROPE AND WASHER

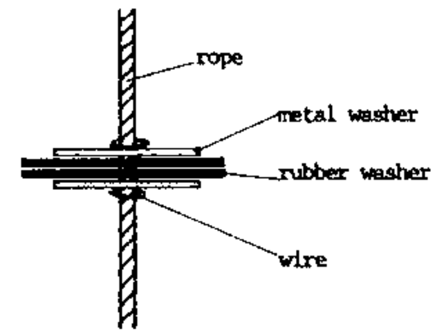

9. Suction Hand Pump with Piston with riser main pipe, two valves in the pump body, plunger, outlet, and handle; with all moving parts above ground; for wells up to 7 m.

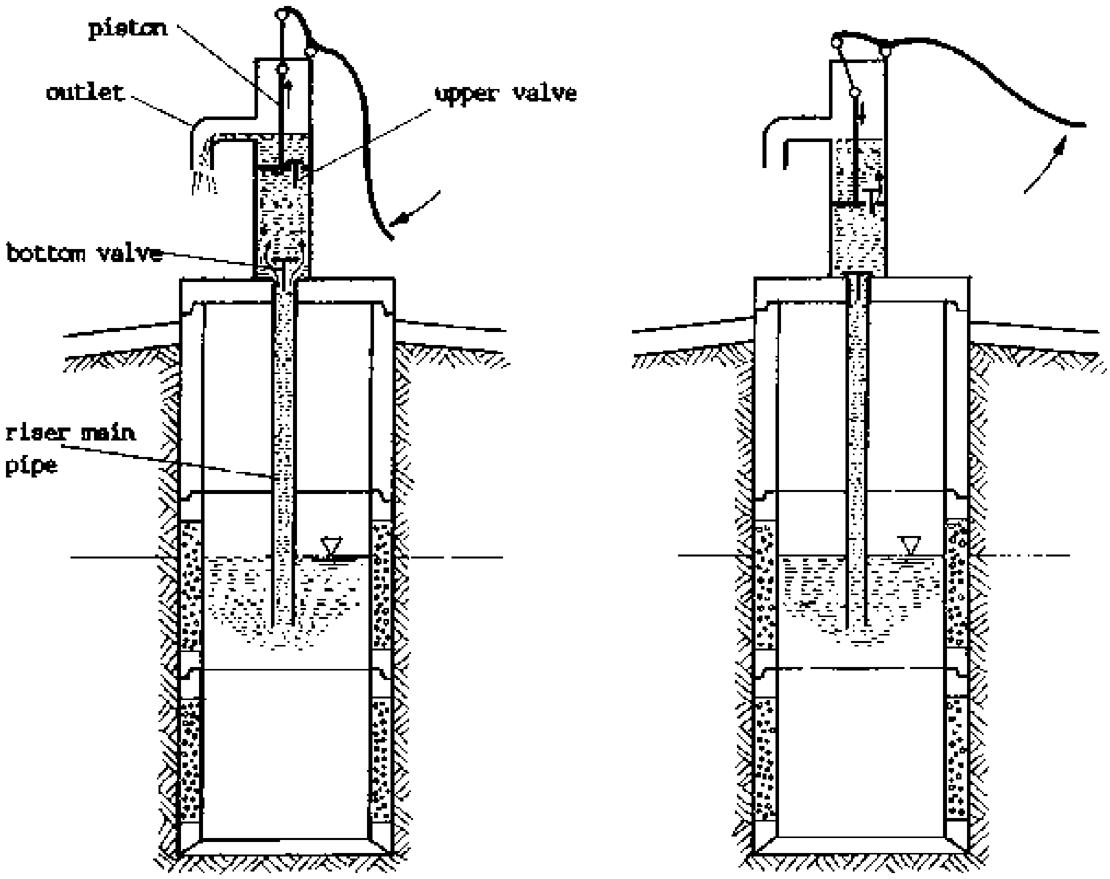

Schematic Illustration

10. Direct Action Hand Pump with Cylinder with riser main pipe, rod, and handle directly connected to the rod; for wells up to 30 m.

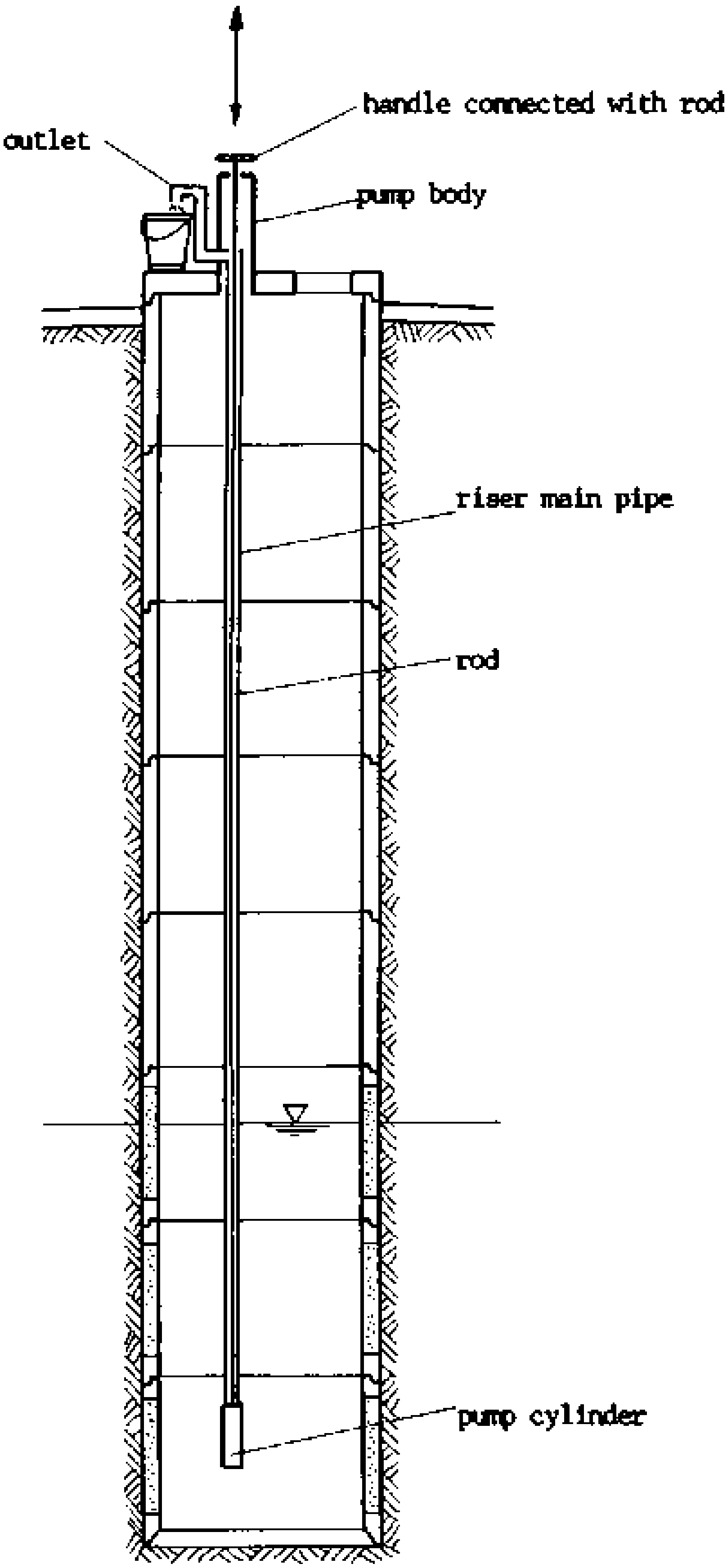

Schematic Illustration

11. Piston Hand Pump with Chain Link (India Mark II) with cylinder, riser main pipe, rod, water tank, outlet, chain link, and handle; for deep wells; see also 8.19, 8.31, 8.33.

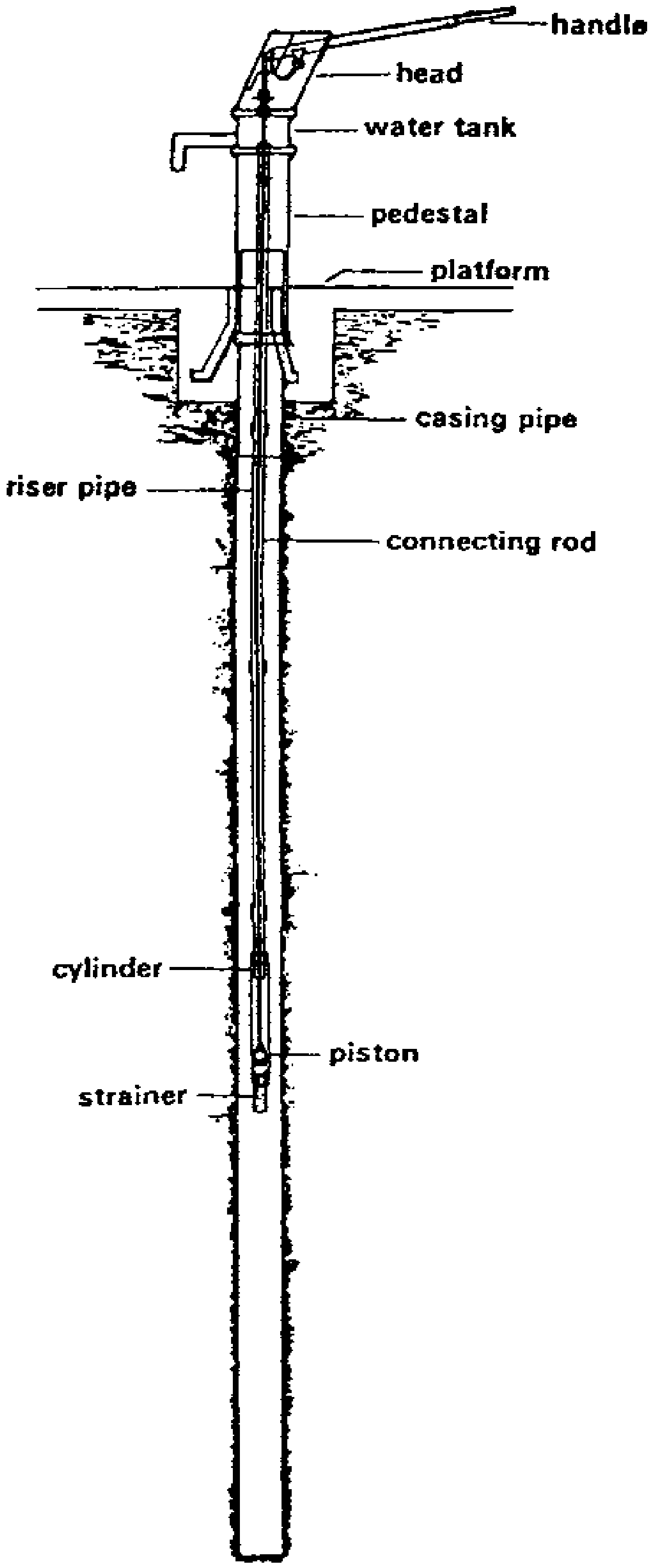

12. Piston Hand Pump with Uganda Type Handle with cylinder, riser main pipe, rod, outlet, and wooden handle; for deep wells.

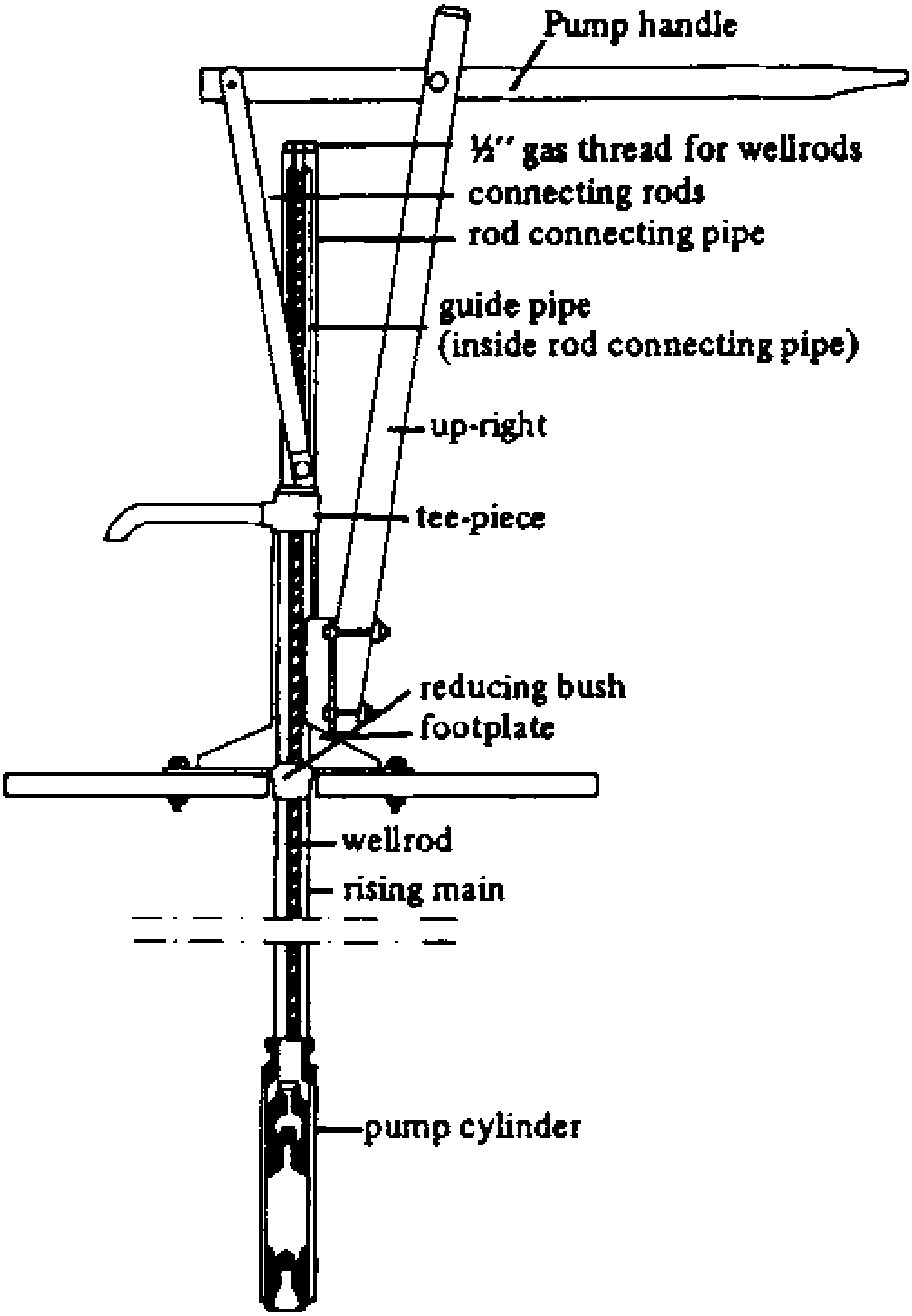

13. Piston Hand Pump with Fly-Wheel with cylinder, riser main pipe, rod, outlet, fly-wheel moving the rod by rotary crank (transmitting the rotation of the fly-wheel into up-and-down movement of the rod); for deep wells.

Crank Mechanism:

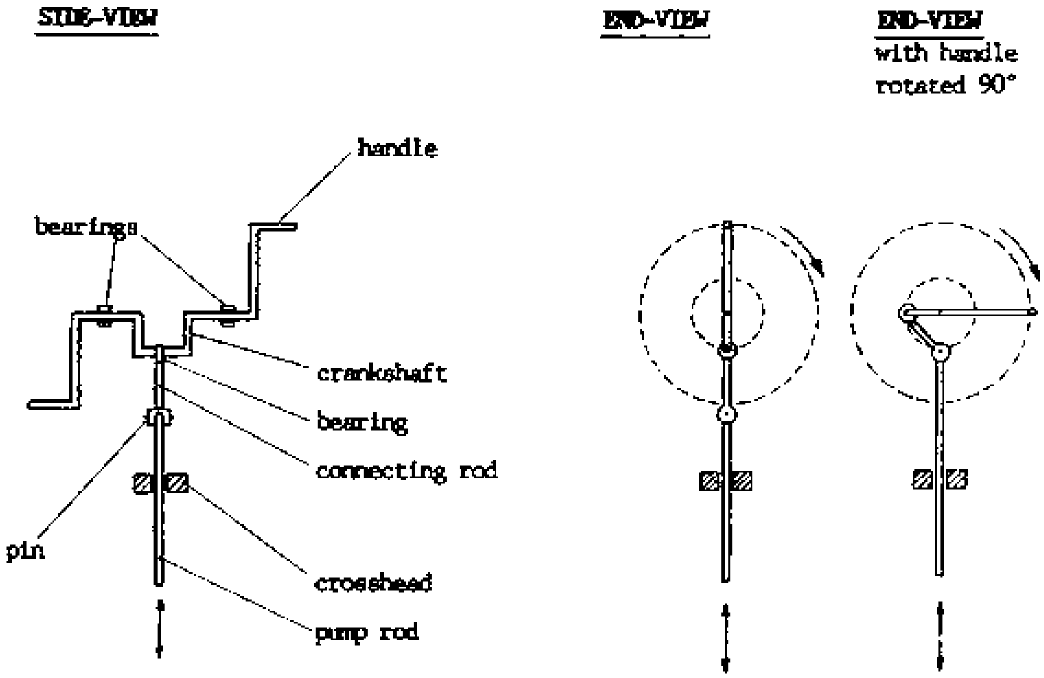
SIDE-VIEW
END-VIEW
END-VIEW
with handle
rotated 90°
handle
bearings
crankshaft
bearing
connecting rod
pin
crosshead
pump rod

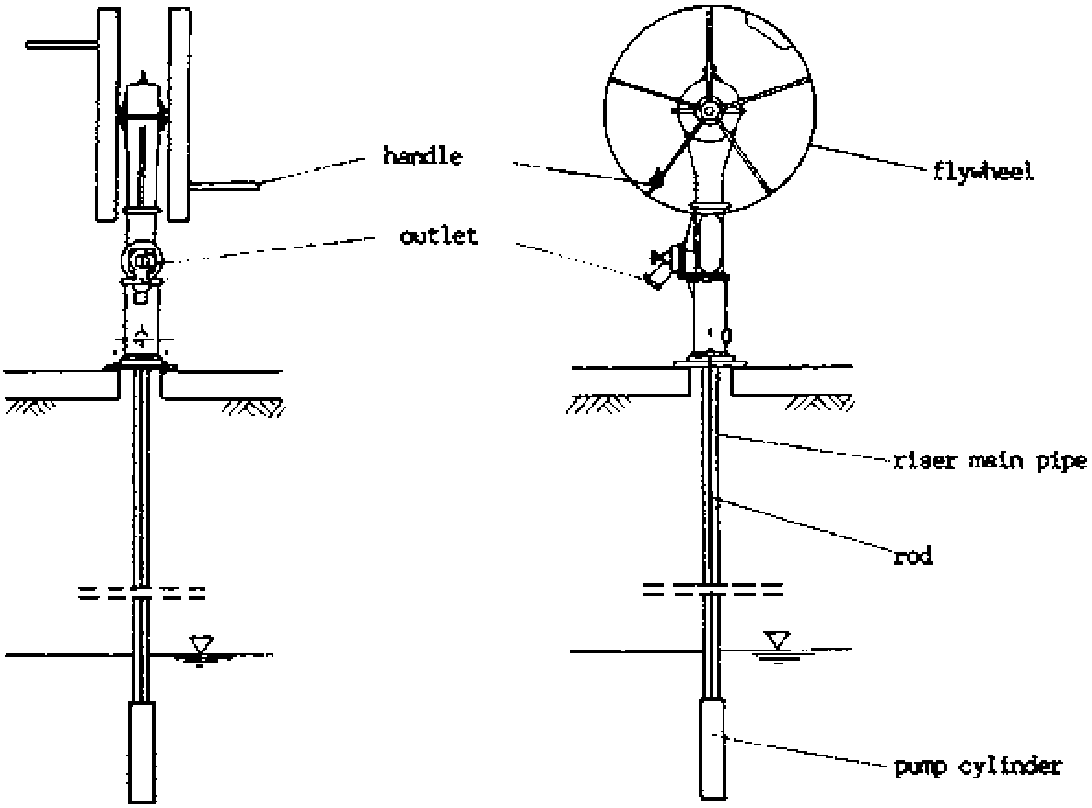
handle
outlet
flywheel
riser main pipe
rod
pump cylinder

14. Force Pump either suction type (like No. 9) or with cylinder (like No. 11) for pumping water from a well to an elevated tank.

Force Pump Suction Type

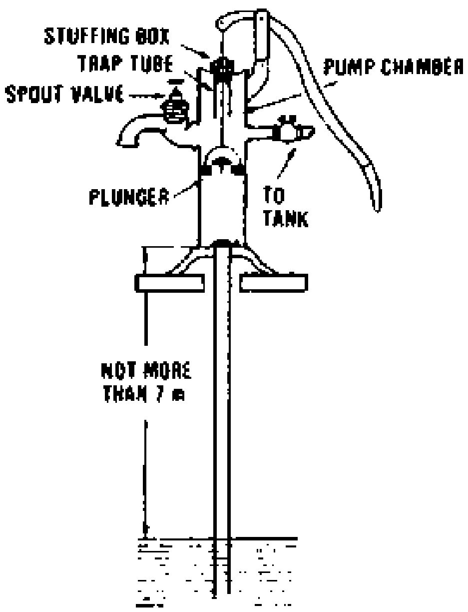

Force Pump with Cylinder

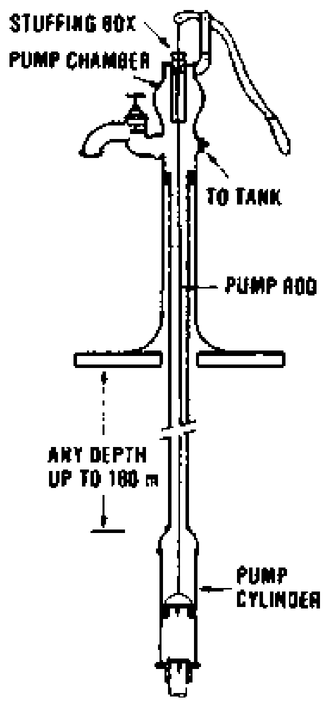

15. Wind Pump with cylinder, riser main pipe, rod, connection to water tank, and wind-wheel moving the rod by rotary crank; for deep wells.

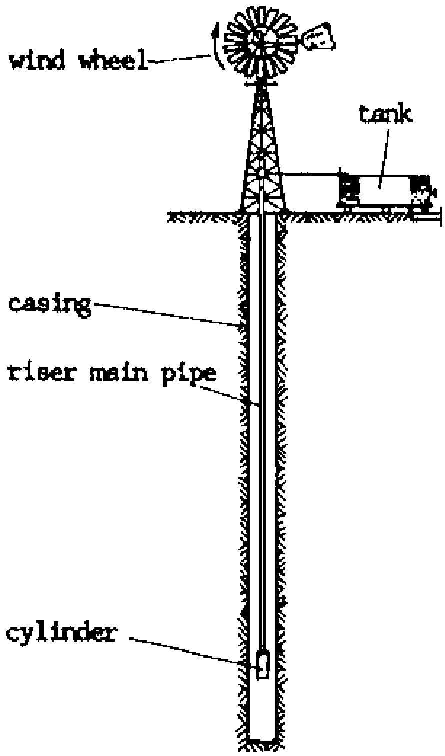

16. Vergnet or Mengin Pump with pilot cylinder, pilot pipe, rigid cylinder (with three valves), discharge pipe and outlet, foot-operated.

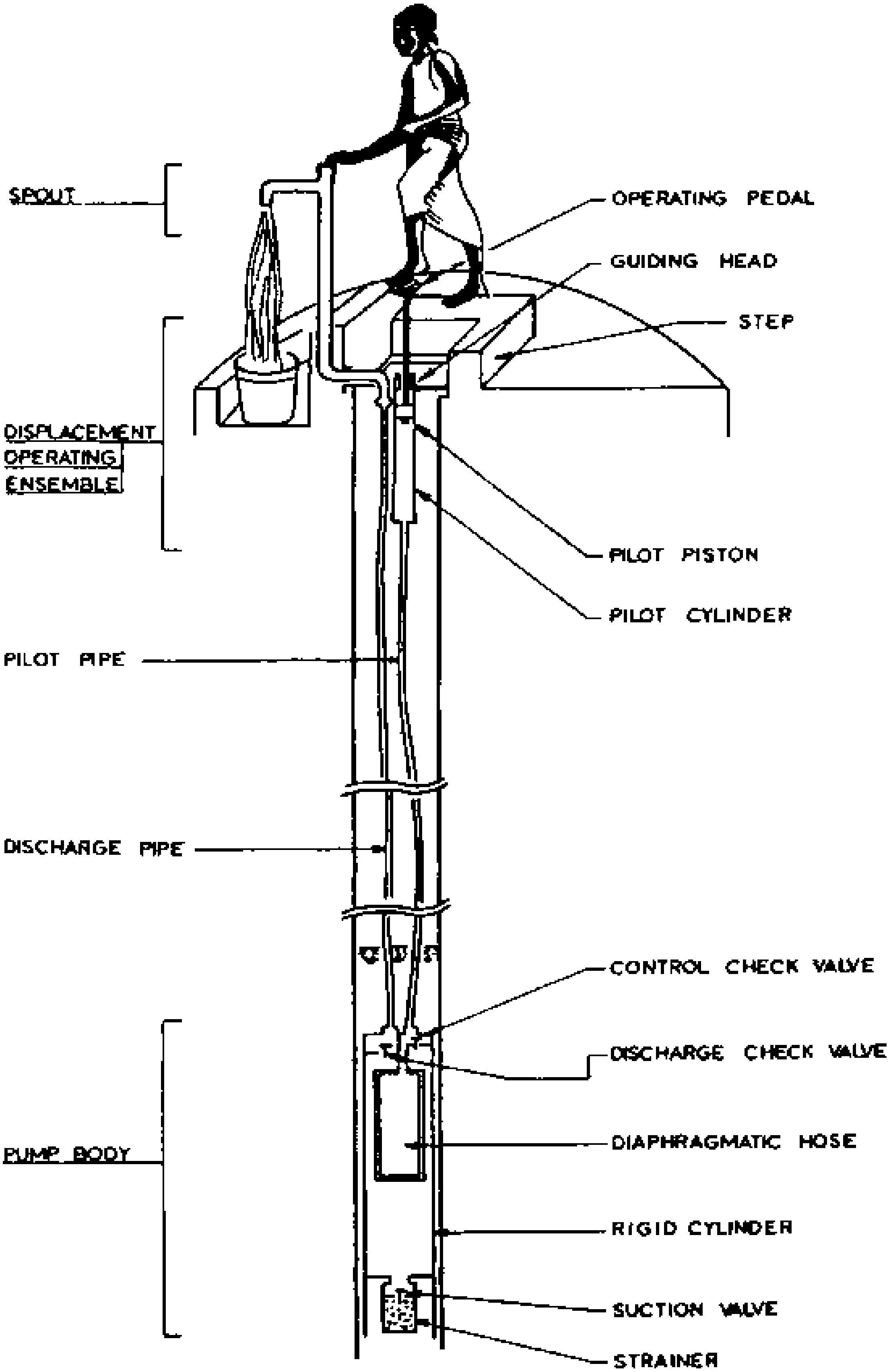

17. Petro Pump with counterweight holding the lower end of pump in position, a pumping hose from flexible membrane creating the suction, two valves, riser main pipe moving up and down, outlet moving up and down, and handle.

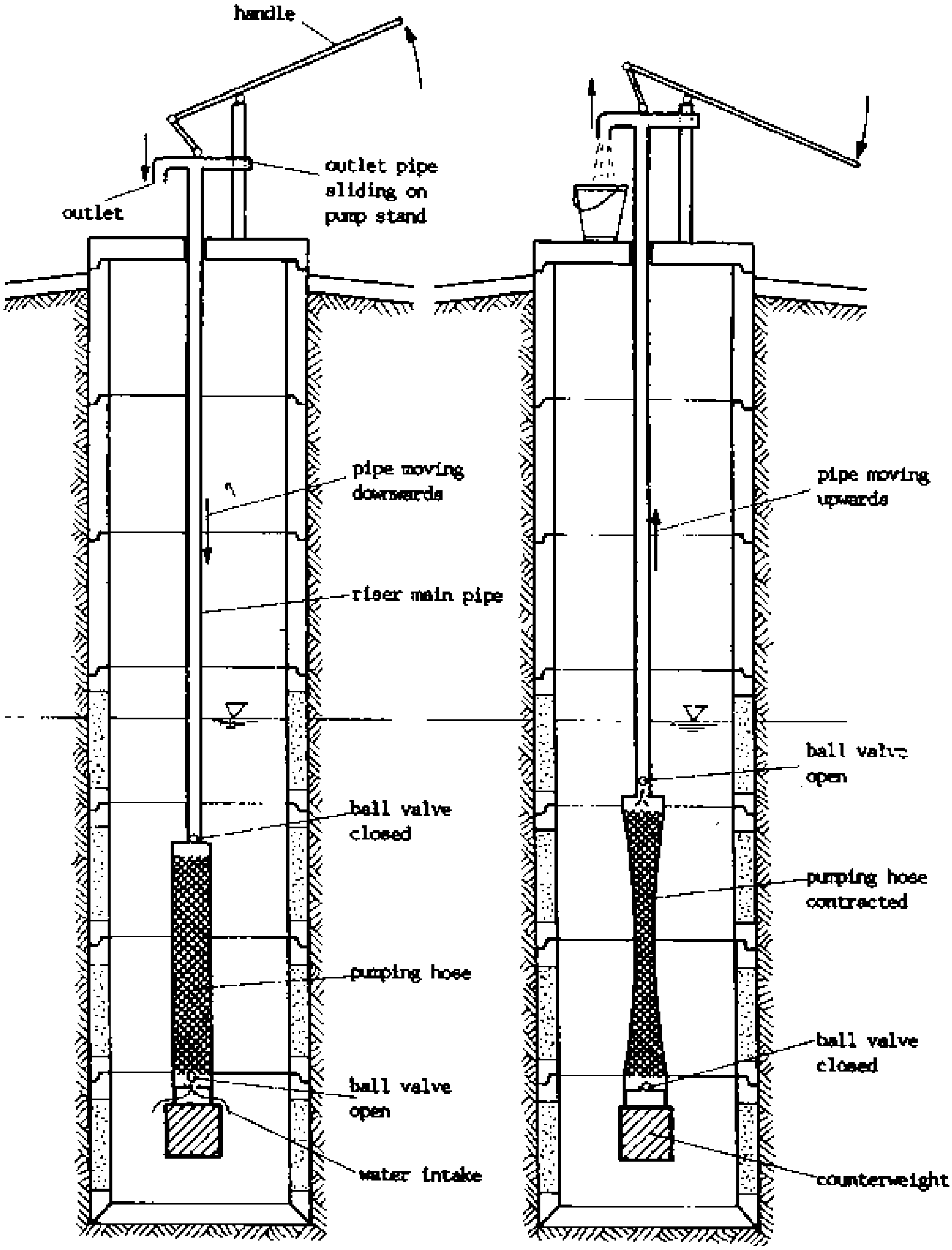

Schematic Illustration

18. Blair Pump with stationary cylinder, foot valve, riser main pipe which is at the same time pump rod and plunger with a valve, with bent end of riser main pipe as outlet, and handles.

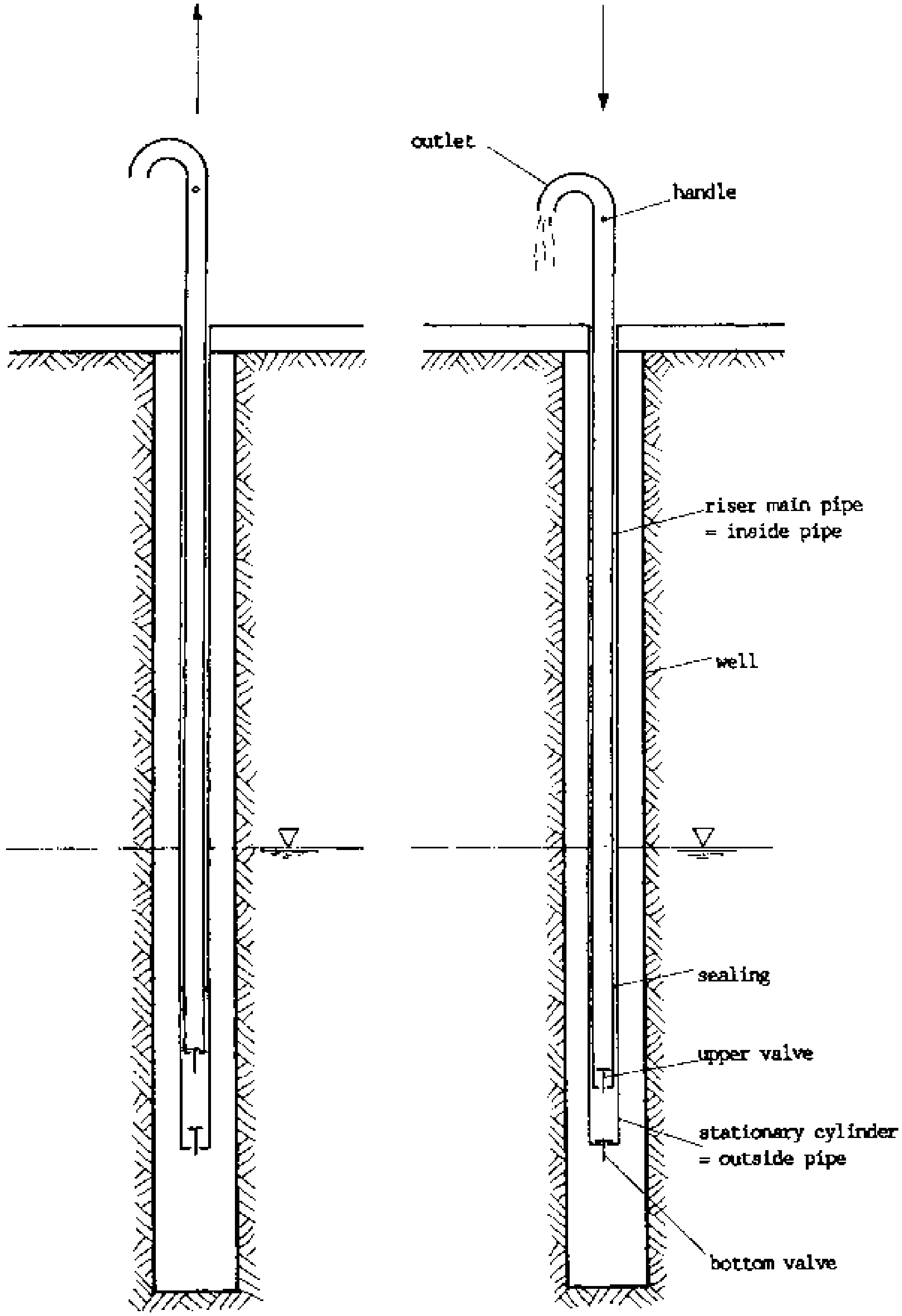

Schematic Illustration

19. Diaphragm Hand Pump with foot valve (= suction sustainer), suction hose, pump body with two valves, rubber membrane (= diaphragm), handle, outlet; for wells up to 7 m; see also 8.26 for operation.

ISOMETRIC VIEW

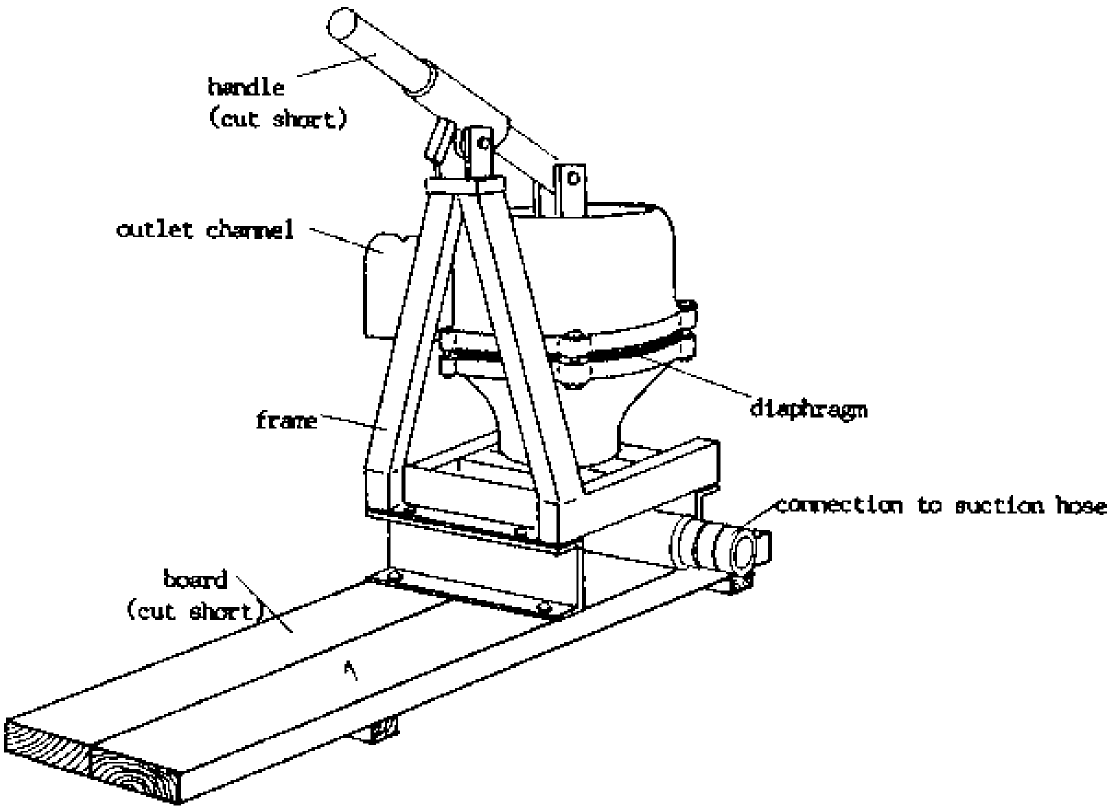

CROSS-SECTION (not in operation)

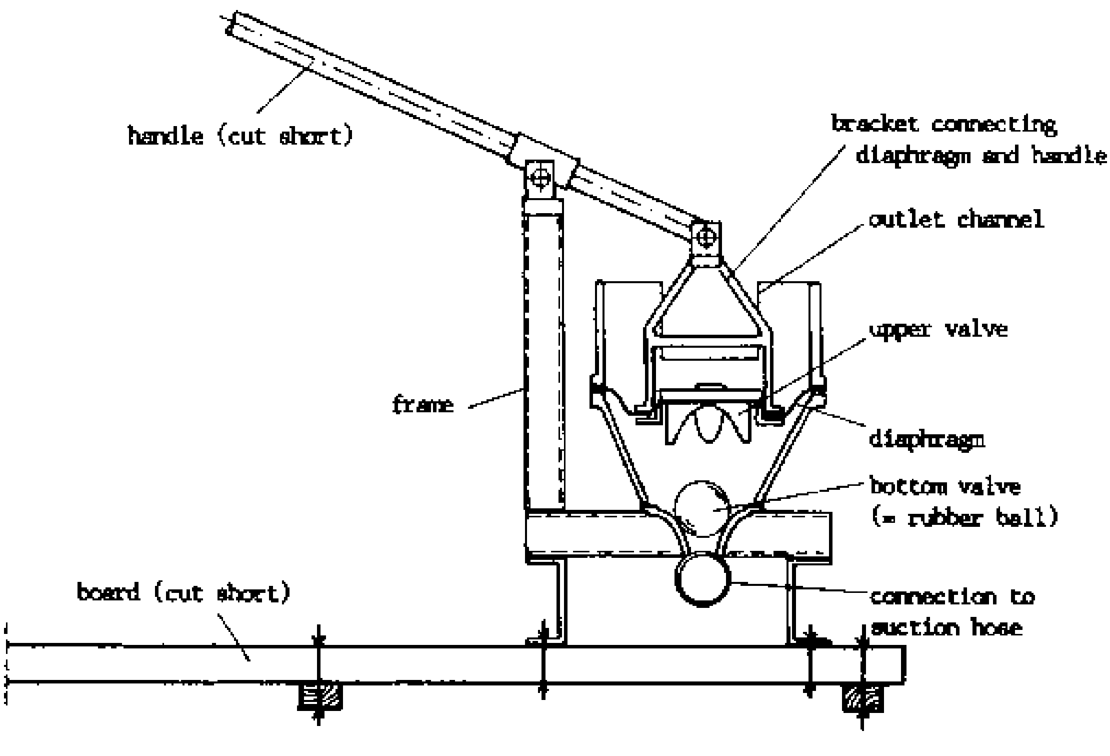

20. Diaphragm Engine Pump with foot valve, suction hose, pump body, membrane moved by engine; for wells up to 7 m.

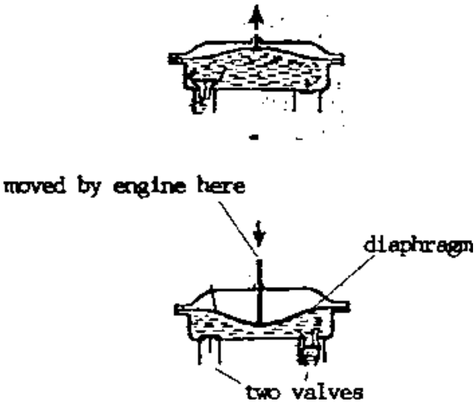

21. Hydraulic Ram with water storage higher than the ram, supply pipe (= drive pipe), check valve, air chamber, discharge pipe (= delivery pipe), return spring, waste valve, outlet for waste water; requires a constant flow from the storage and pumps a small part of this flow to a higher level.

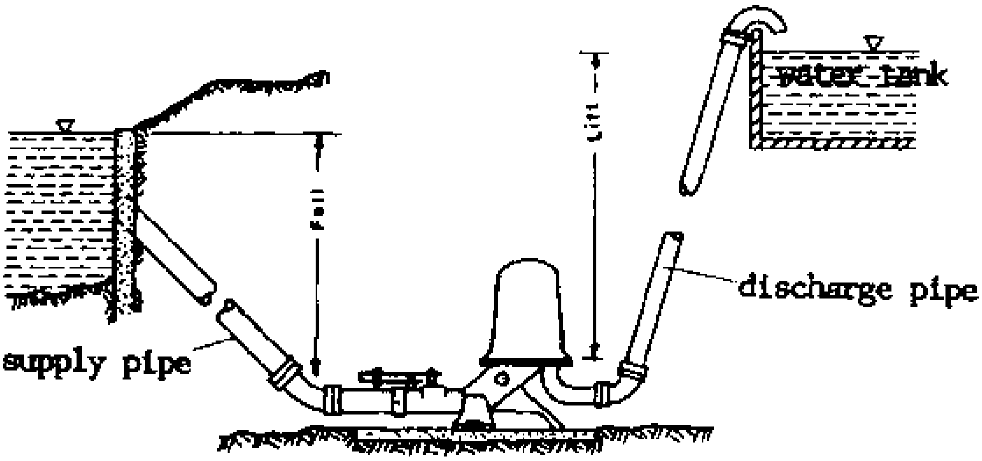

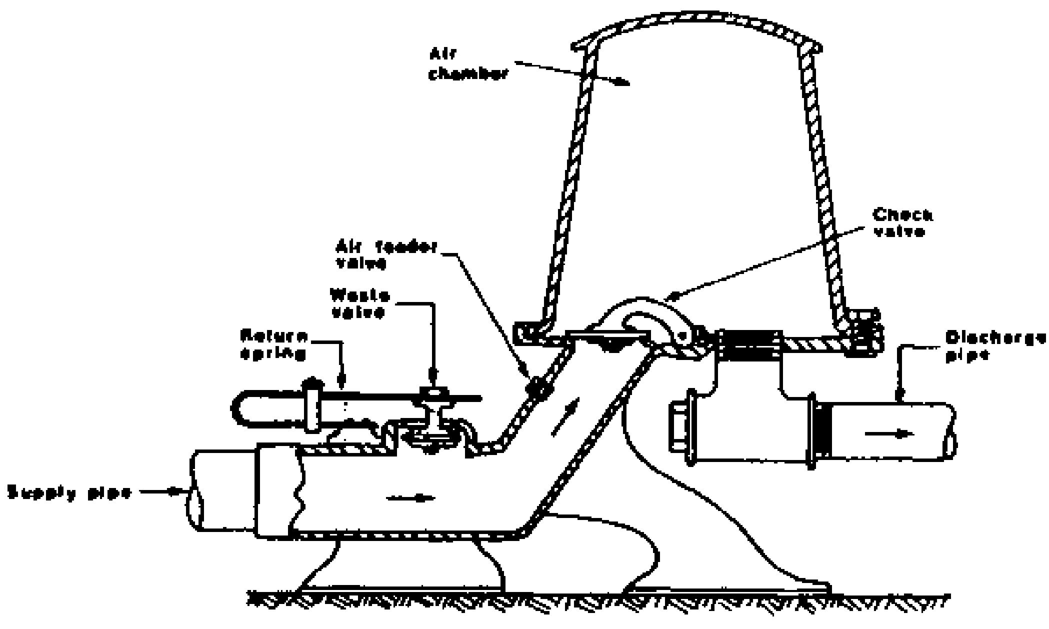

22. Helical Rotor Pump, Hand-Operated with check valve, helical rotor in a fixed stator, riser main pipe, drive shaft (= rod transmitting the rotation from the pump head to the helical rotor), outlet, gears (transmitting the rotation of the handles into rotation of the drive shaft), gear box and handles; for deep wells.

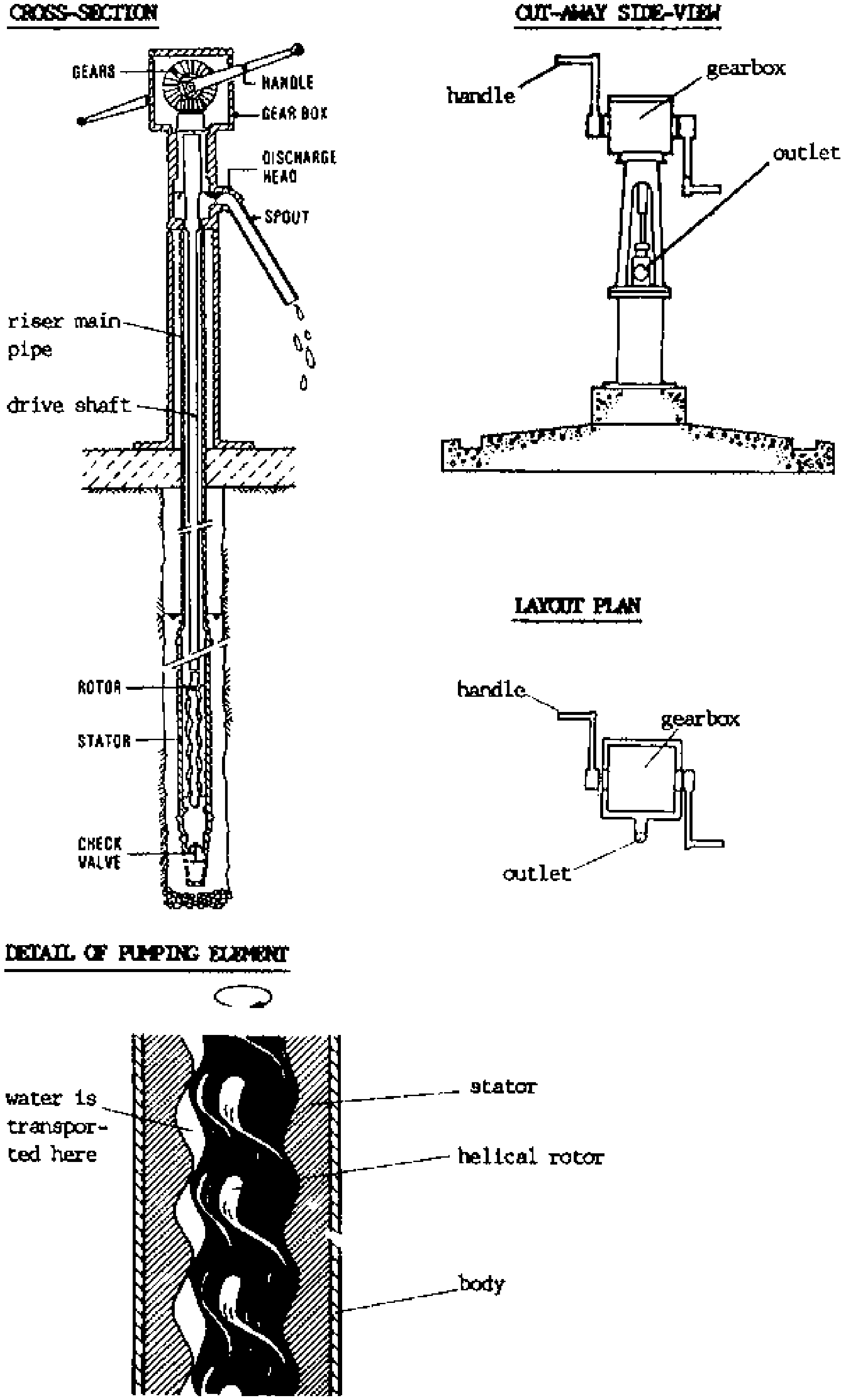

Taken from leaflet, Mono Pump

23. Helical Rotor Pump, Engine-Driven with helical rotor in a fixed stator, riser main pipe, gears, gear box, engine; for deep wells.

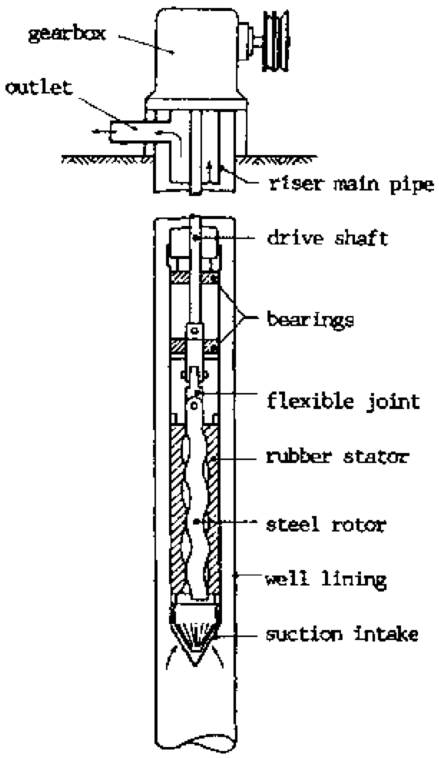

24. Archimedean Water Screw with an inclined rotor rotating in a fitting bed (in the shape of a half cylinder), engine driven; for water or mud

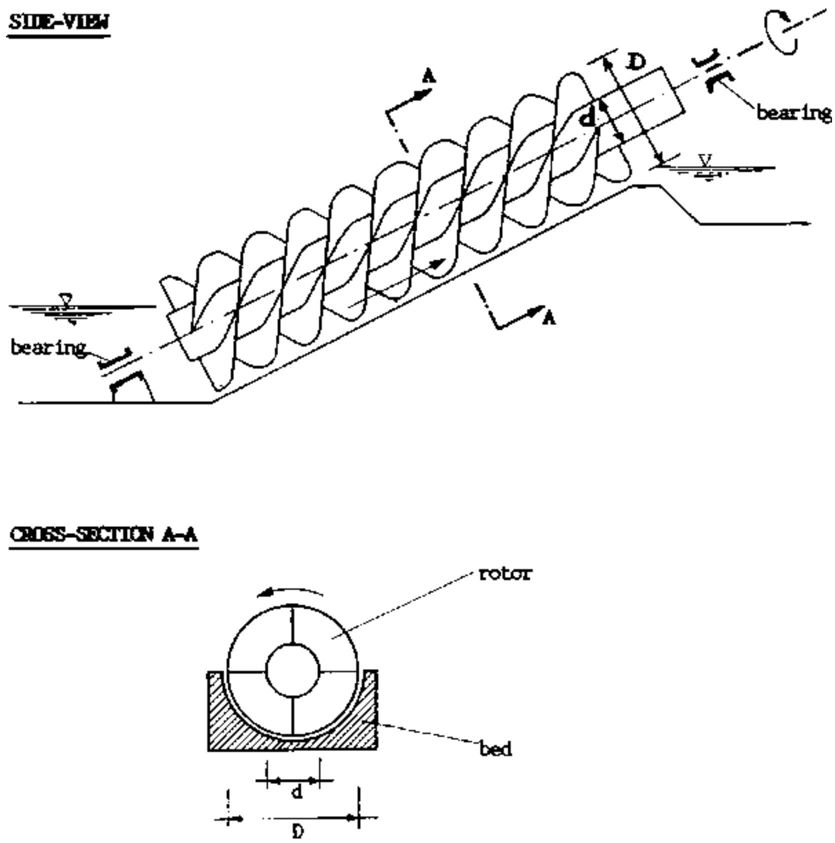

25. Water Wheel with a rotating water wheel lifting the water; engine driven; for low lifts.

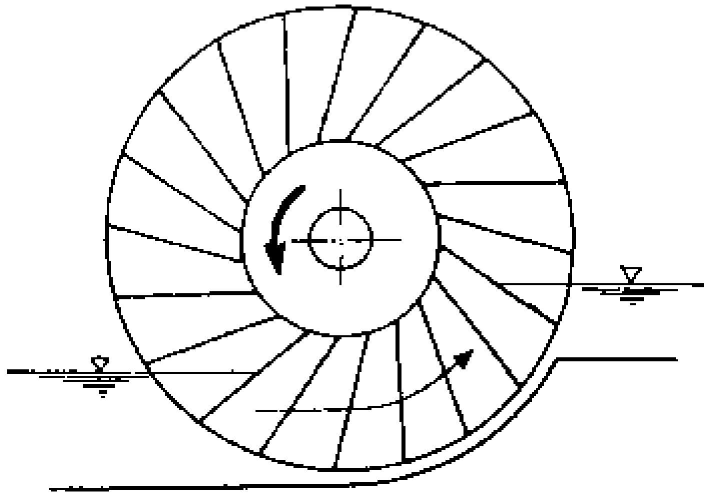

26. Coil Pump with plastic pipes coiled around a frame work rotating by the action of the river current on paddles; pump floating on drums; delivery hose to elevated tank; for small lifts from a river.

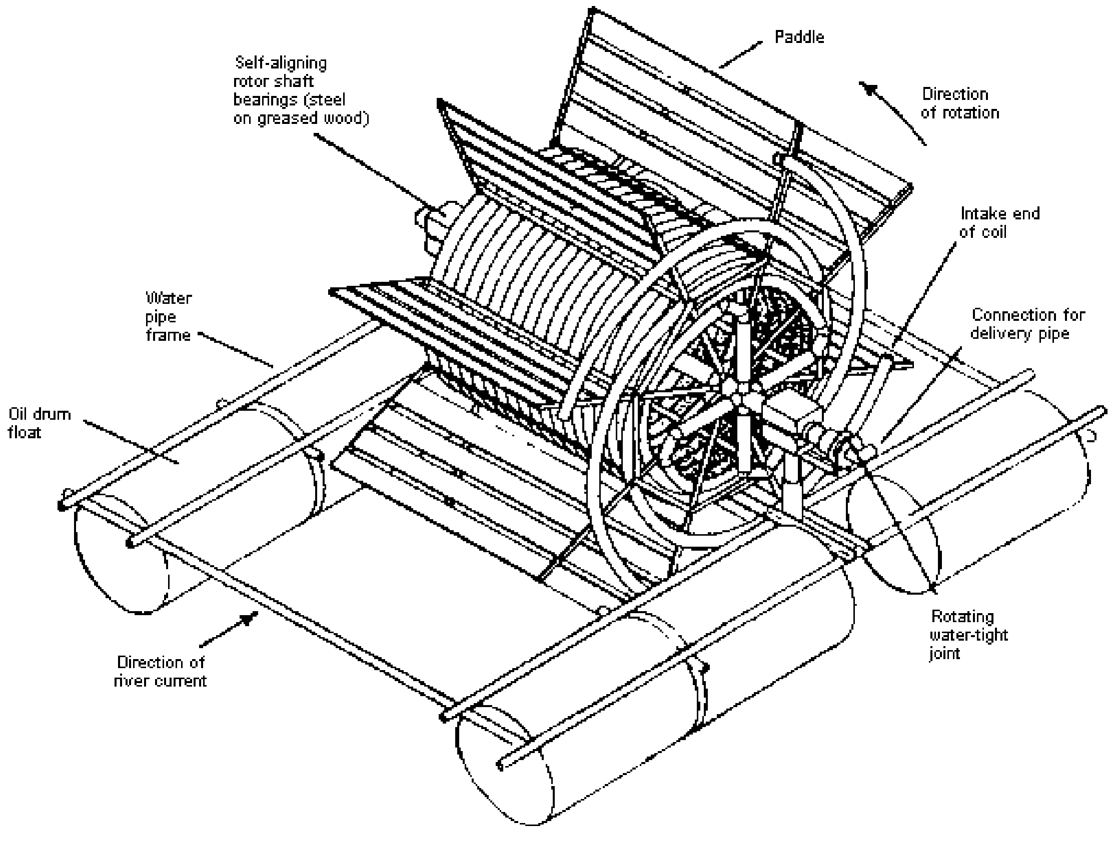

27. Rotary Pump with rotors within a fixed casing (= stator).

CROSS-SECTION

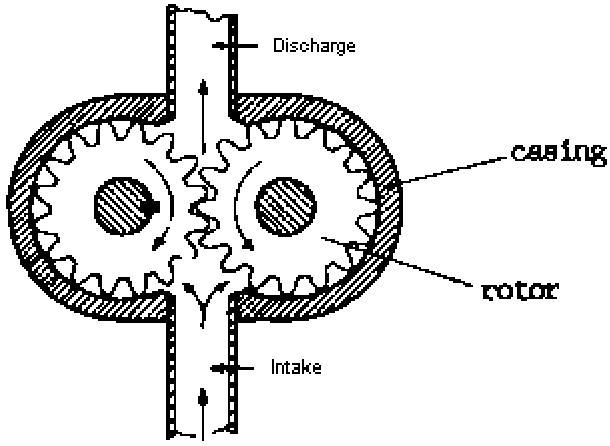

28. Piston Pump with a piston moved by an engine to create suction for pumping.

CROSS-SECTION in two stages of operation

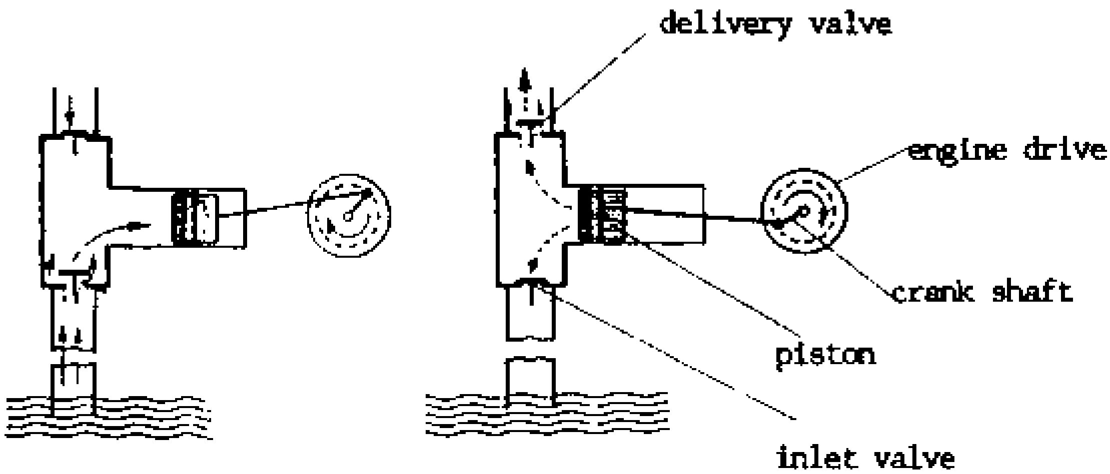

29. Centrifugal Pump installed on ground level; with rotating impeller within a casing, suction pipe and delivery pipe; for suction heads up to 7 m and delivery heads up to 30 m; see also 8.27

CROSS-SECTION

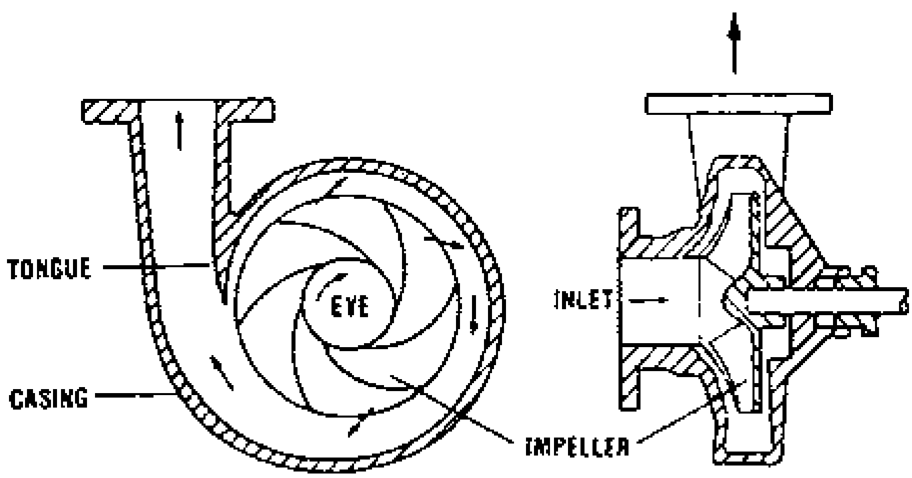

30. Submersible Pump for Dirty Water with electrical motor and pump within a pump body submersed into the water, with power supply supplied by electrical cable, and a delivery hose; for deep wells; see also 8.28.

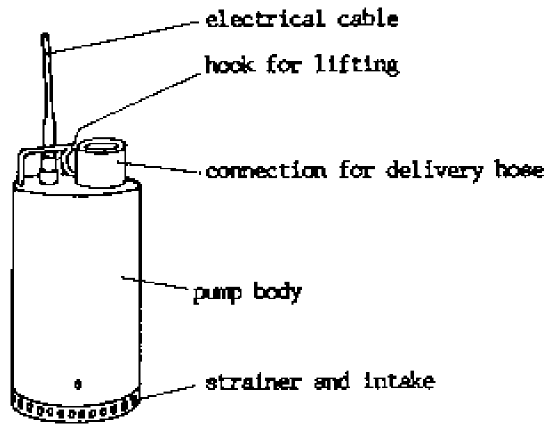

31. Submersible Pump for Clean Water used in boreholes; with slim shape especially designed for boreholes; for clean and not salty water and deep wells.

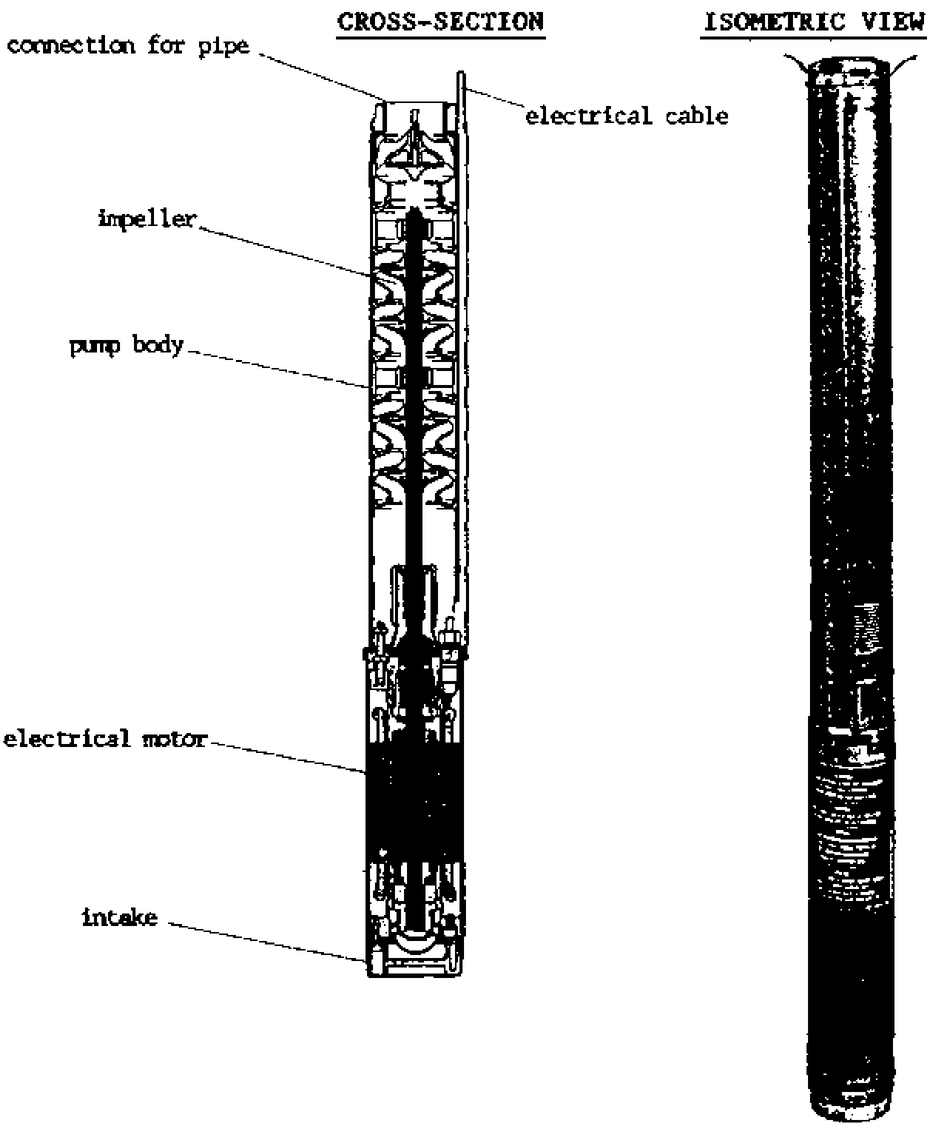

Taken from leaflet, Homa Pump

32. Jet Pump with centrifugal pump installed on ground level, pressure pipe, jet body with jet nozzle, mixing chamber, return pipe, delivery pipe, and elevated tank; pumps water into the well through pressure pipe, the flow speed is increased by the nozzle and, thus, water sucked in from the well; the water moves up through the larger diameter return pipe to the pump; a part is delivered to the tank, the other part is pumped again into the pressure pipe, etc.; no moving parts in the well

CUT-AWAY SIDE-VIEW

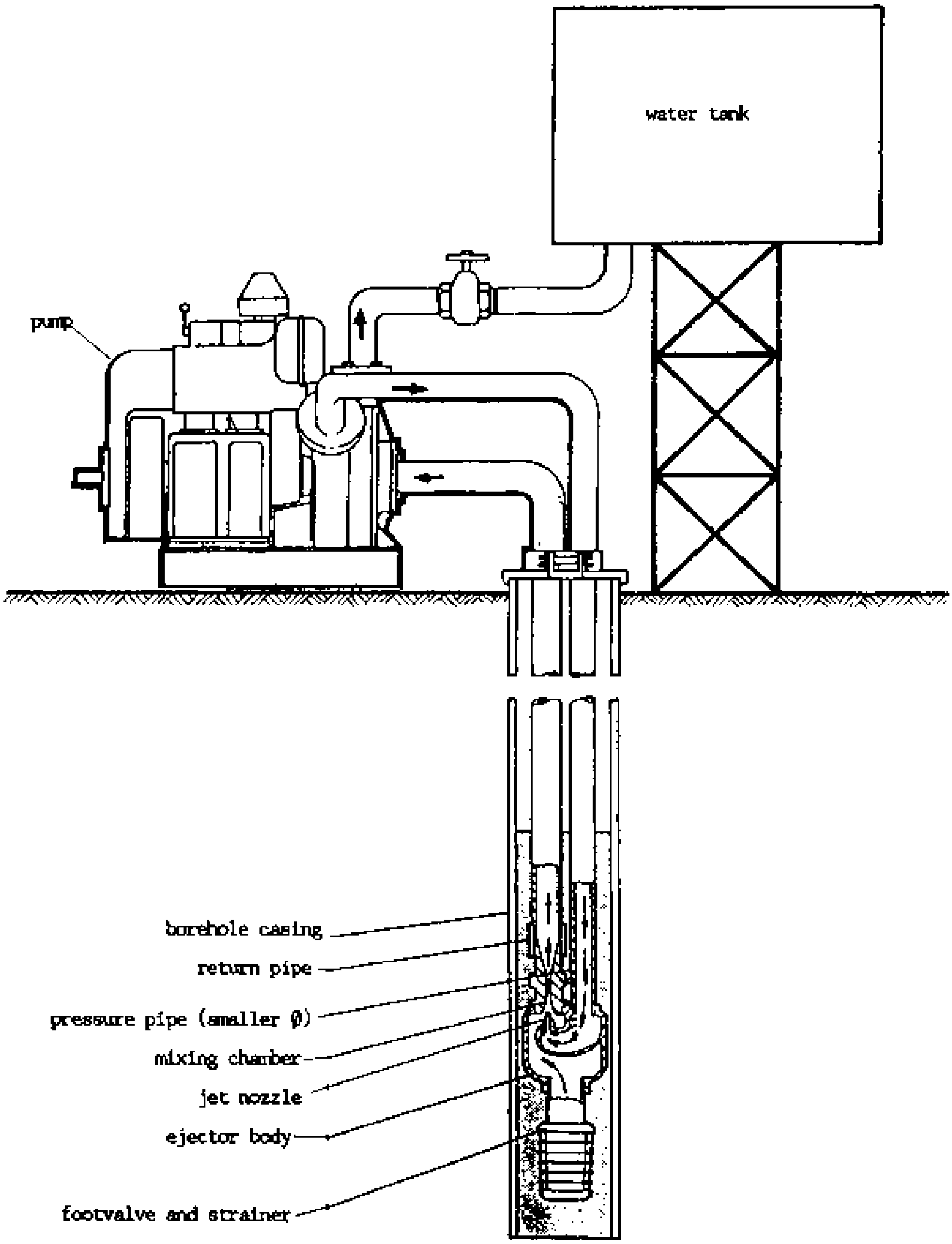

Schematic Illustration

Taken from leaflet, Jet Pump

8.25. Dewatering Wells during Construction

When digging below the water table, dewatering of the well becomes necessary in order to enable the technicians to continue the work. Dewatering can be done by the following different means. Concerning the yields of different pumps see 8.34 or 8.24/4f.

A) Dewatering with a Bucket, Rope and Pulley

Small amounts of water can be extracted with the bucket used for excavating the soil.

B) Dewatering with Jerrycan, Rope and Pulley

A jerrycan, cut open at its top, pulls in one go twice as much as a bucket, and is light-weight. Therefore, it is quite suitable for dewatering wells during construction by hand. However, many people are required. They have to work in shifts. Two jerrycans can be used parallel on two pulleys.

C) Dewatering with a Large Bucket, Steel Cable, Pulley and Winch

A large bucket, both for dewatering and lifting excavated soil, can be manufactured locally from a metal drum. Cut off one third of the drum and reinforce it with three rings of flat iron. A reinforcement rod Ø 10 mm must go all around the bucket to bear the weight and to serve as a handle.

Such a large bucket can be filled half way with soil, or completely with water. It is to be pulled by steel cable and winch. The method empties a well quickly, but requires a number of people to work in shifts as the work is very heavy.

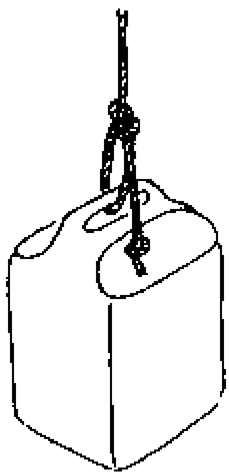

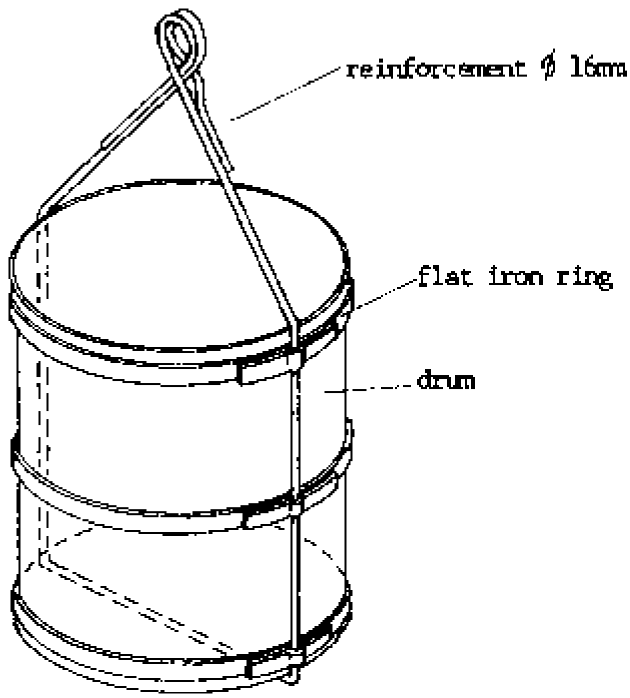

D) Dewatering with Hand-Operated Diaphragm Pump

The method is described in detail in 8.26. It can be used only for wells up to 8 m deep, because a diaphragm pump is a suction pump. It requires heavy manual labour, but no fuel, few spareparts and little skill. If the yield of the well is not extremely high, this is a very good method for dewatering a well.

E) Dewatering with a Fuel Powered Suction Pump

The method is described in detail in 8.27. It can be used only for wells up to 8 m deep. It requires fuel, spare parts and skilled labour. The method is appropriate if the yield of the well is very high.

F) Dewatering with Submersible Pump

The method is described in detail in 8.28. It can be used for deep wells, too, depending on the pump selected. It requires a transportable generator, fuel, spare parts, and skilled labour. The yield is normally less than for fuel powered suction pumps. The method is suitable if dewatering by hand becomes too tiresome, especially in deep wells.

G) Selecting the Suitable Dewatering Method

The method suitable for a particular well has to be selected according to the available manpower and equipment. Sometimes, two or three of the above methods can be used at the same time (= in parallel = simultaneously) or one after another (= consecutively).

Often, the dewatering facilities determine how deep a well can be dug into the water table. If the water returns into the well more quickly than you can dewater it with the available facilities, digging cannot be continued any more.

It is very important to dig as deep into the water table as possible in order to have some reserve for dry years. With careful planning you can reach the maximum depth possible with the given facilities:

1. Plan the work so that you combine all available people and dewatering facilities. Work overtime for a short period until digging and lining below the water table are finished.

An example for bad planning would be: You start dewatering on Friday morning. Up to 14.30, the end of the working hours, you have just managed to empty the well and the actual work could start. During Saturday and Sunday, the well fills up again. On Monday, you again dewater until 14.30, and stop work. On Tuesday, you dewater until 13.30 and dig for one hour. On Wednesday, you dewater until 13.30 and dig for one hour... - with completely demoralized staff.

2. Keep careful record of all your activities including the time, water table, number of pumps, buckets, etc. used. Keep track of how quickly the water returns into the well over night (how many cm per hour).

3. Plan the work so that digging into the water table will take place at the end of the dry season when the water table is at its lowest.

8.26. Diaphragm Pumps

Diaphragm pumps suck up the water through up-and-down movement of a flexible rubber membrane called a diaphragm.

A) Types of Diaphragm Pumps

Diaphragm pumps can be differentiated according to the type of energy which drives them:

1. Engine driven diaphragm pumps pump very high yields and are not discussed here.

2. Hand operated diaphragm pumps are designed for irrigation purposes in order to lift a big amount of water with a small head. This type of pump is also very suitable for dewatering shallow wells during construction and will be discussed in the following.

B) <u>Range of Use</u>

Being a suction pump, the possible lift of a diaphragm pump is limited to 8 m.

C) <u>Elements of a Pumping System with a Diaphragm Pump</u>

A pumping system with a diaphragm pump consists of the following elements:

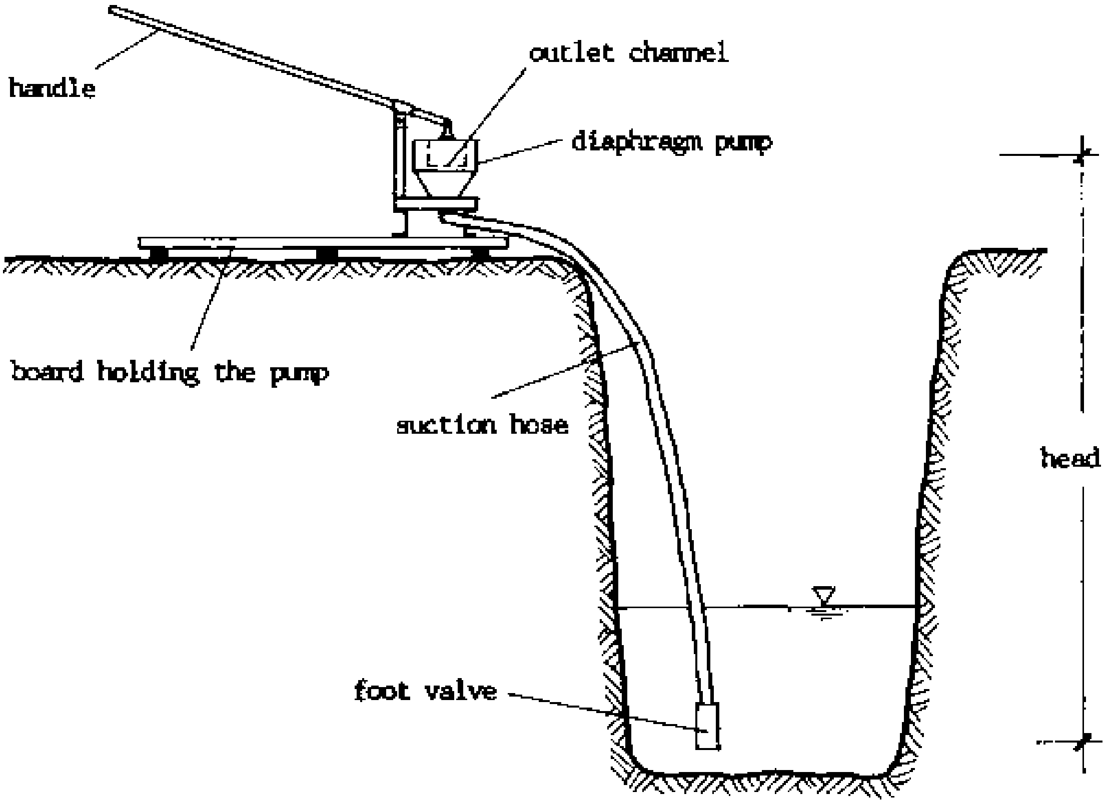

D) <u>Description of the Diaphragm Pump</u>

A diaphragm pump consists of a metal body holding the flexible rubber membrane, the diaphragm. The membrane has a round opening in the middle, reinforced with a steel ring. The ring is connected to the handle and also holds the upper valve. The bottom valve, made of a rubber ball, is placed at the inlet of the suction pipe.

The operation of a diaphragm pump has two distinct and alternative phases:

<u>1. Phase</u>

- The handle moves downwards.
- The membrane moves upwards.
- The upper valve closes by its weight.
- The membrane creates suction and opens the bottom valve.
- Water is sucked in through the suction pipe.

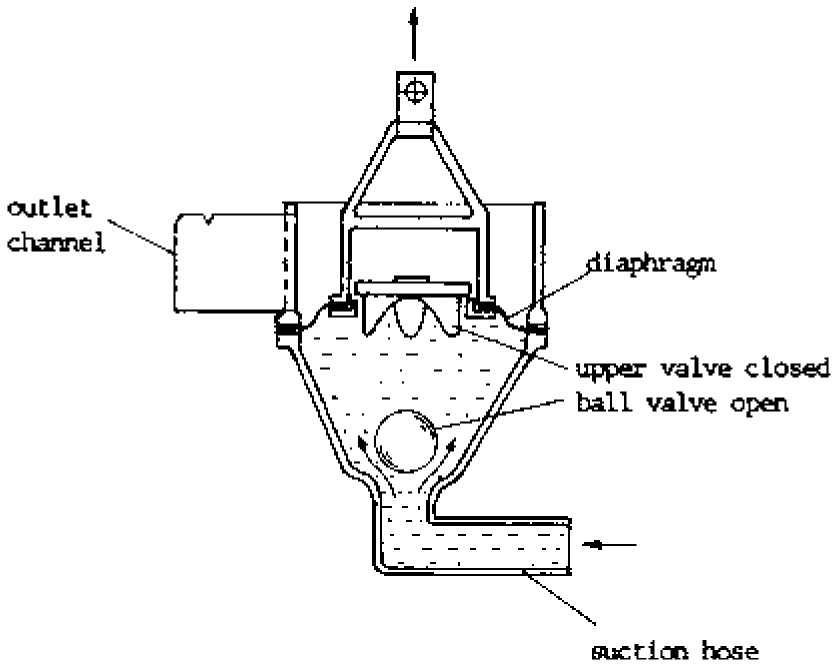

Schematic Illustration Diaphragm assembly turned by 90° for clarity; see also 8.24/22.

2. Phase

- The handle moves upwards.
- The membrane moves downwards.
- The backflow of water closes the bottom valve.
- The water wants to escape and opens the top valve.
- The water is delivered in an open outlet.
- The water in the suction hose does not move.

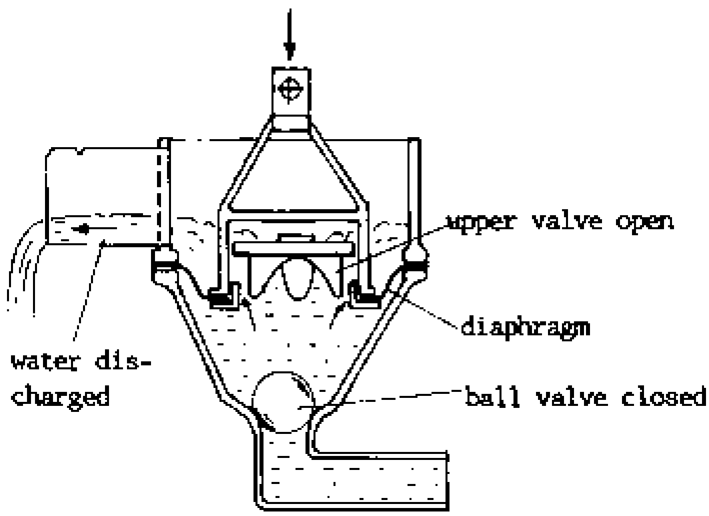

The two valves open and close alternately and, thus, the water is lifted in steps (not continuously). The foot valve at the bottom of the suction hose (the third valve!) is indispensable. It allows the water to be primed, i.e. to be gradually lifted until the hose is full. The foot valve also makes it possible to rest during pumping without having to prime all over again.

E) Advantages and Disadvantages

The advantages of a hand operated diaphragm pump are:

- It is very simple.

- It is sturdy (= strong, not easily damaged).

- Its operation is very simple.

- It does not require fuel.

- The yield is high.

- It can pump sandy water because there are no sensitive parts which can wear out quickly.

The disadvantages are:

- The pump can only pump up to 8 m depth.
- Pumping is hard work and requires enough people to work in shifts.
- The suction hose can wear out quickly.
- The membrane needs to be replaced from time to time.

F) Operation of a Diaphragm Pump

The operation of a diaphragm pump is extremely simple:

- Assemble pump, suction hose and foot valve.
- Pump.

However, take care of the following points:

- The pump must be fixed on a board of 2 pieces of timber 2” × 8”, 2 m long. The board must stand on level and stable ground and should not move.

- Handle the suction hose with great care to avoid damage. Do not pull it over the rough edge of the well. The suction hose must be airtight (without the slightest hole), otherwise, the pump cannot suck.

- Tighten all bolts firmly.

- Two or three people can pump, but they should move the handle from the highest possible to the lowest possible position in an even rhythm. They should not jump with the handle.

- After work, do not leave the membrane exposed to sun, but cover it. This prolongs its lifetime.

8.27 Fuel-Powered Suction Pumps

The most common type of fuel-powered suction pump is a centrifugal pump with suction and discharge hose or pipe.

A) Types of Fuel-Powered Suction Pumps (Centrifugal Pumps)

Suction pumps can use diesel or petrol as fuel:

1. Diesel powered suction pumps are heavier and, therefore, more suitable for permanent installation. They will not be discussed here.

2. Petrol powered suction pumps are usually light-weight and, therefore, transportable and

very suitable for dewatering wells during construction. They will be discussed in the following with the HONDA WA 30 X as an example.

B) Range of Use

Fuel powered suction pumps are, like all suction pumps, limited to a depth of 8 m.

C) Elements of a Pumping System with a Petrol Suction Pump

A pumping system with a petrol powered suction pump consists of the following elements:

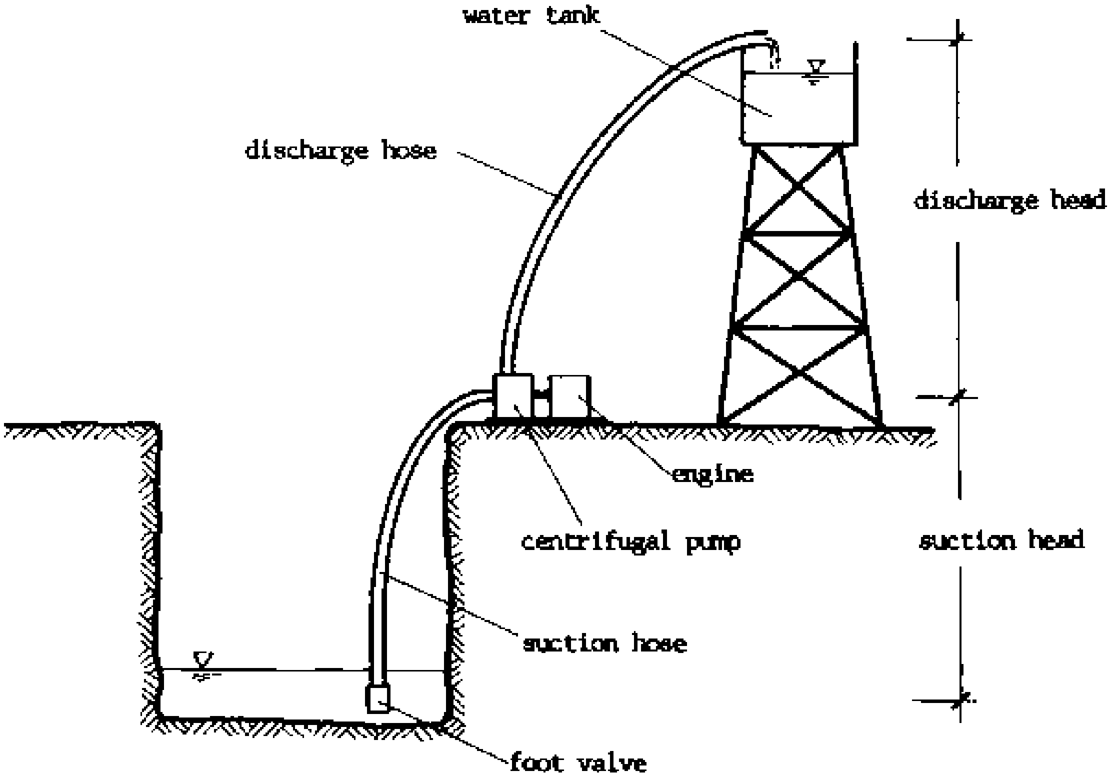

D) Description and Specifications

A petrol engine produces rotational movement and directly turns the axle of the attached centrifugal pump. The rotating blades suck water through the suction hose and press it through the discharge hose to a higher level. As the energy of the fuel is directly converted into mechanical energy which turns the pump, there are small losses and the pump has a high efficiency.

The pump is started mechanically by a recoil starter. A foot valve (= suction sustainer) at the bottom of the suction hose makes priming much easier. The centrifugal pump is cooled by the water pumped and, therefore, must never run dry.

The specifications and the performance curve of the HONDA WA 30 X pump are given here as an example:

Specifications		Remarks
pump type	centrifugal, self priming	a suction sustainer helps priming
suction hose	Ø 3”	
discharge hose	Ø 3”	
suction head	8 m	
discharge head	20 m	
total head	28 m	

max. capacity(yield)	1100 ℓ /min = 66 m^3/h	
direction of rotation displacement	counter clockwise 144 cm^3	= the volume displaced by the piston in a single stroke
engine	4 stroke overhead valve, air cooled single cylinder	
maximal output	5.0 HP	= horse power (Engl.) = PS (German)
	3,600 rpm	= revolutions per minute
fuel tank capacity	3.6 ℓ	
fuel	petrol	
fuel consumption	230 g/HPh -> 1,150 g/h =1.5 ℓ /h	
aircleaner	semidry	
starting system	recoil starter	battery starter is heavier
cooling system	forced air	
dimensions	620 × 410 × 485 mm	
dry weight	35 kg	easily transportable; diesel engines are heavier
self priming time continuous running time	120 sec at 5 m head 2 h 40 min	after that the engine runs too hot, therefore stop.

Performance Curve

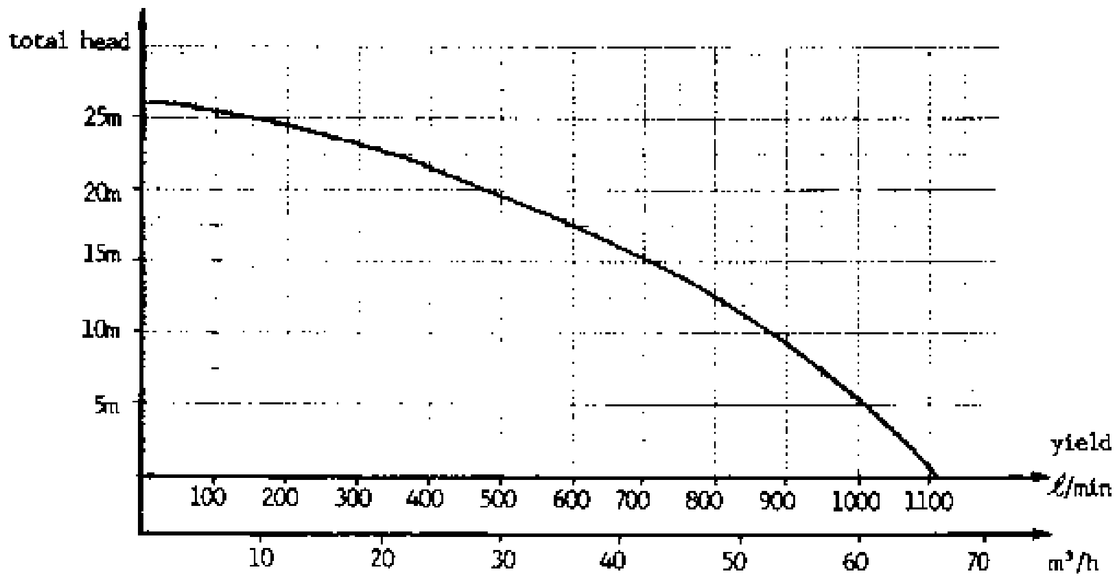

Example:

Water is to be pumped from a well 5 m deep and discharged into a container 7 m above ground level.

Total Head	=	Suction Head	+	Discharge Head	
	=	5 m	+	7 m	=12 m

According to the curve, the yield is to be expected about 820 ℓ /min or 49 m^3/h (for transformation see 8.34/1).

E) Advantages and Disadvantages

The advantages of a petrol suction pump are:

- The pump is light-weight and easily transportable.

- Only a hose is lowered into the well which leaves enough space for the technicians in the well.

- Technicians can work in the well during pumping.

- The pump is able to pump dirty, sandy and muddy water.

- The pump has a high yield.

The disadvantages are:

- The pump can only pump up to 8 m depth.
- The pump needs fuel.
- The equipment is relatively sophisticated and can break down easily.
- Spare parts are difficult to get.
- The pump requires great care during operation.
- The hoses wear out quickly.

F) Step-by-Step Procedures for Operating the Pump

For dewatering a well with a petrol suction pump, follow these steps:

No	Step	Reasons
1	Place the pump near the well in the shade on a level surface. The exhaust pipe must direct away from the well.	Otherwise the pump easily gets overheated. On a sloping area the fuel will spill. Exhaust fumes are poisonous and heavy and can easily descend into the well(8.22/Iff)
2	Connect foot valve, suction hose, pump and discharge hose. If you have no foot valve, use a strainer. Place the suction hose into the well, and the discharge hose far away. The strainer should be well submersed, but not stand on the ground.	Gravel sucked into the pump will cause serious impeller damage.
3	Check engine oil level.	Running the engine without sufficient oil can cause serious damage.
4	Check the fuel level. Do not spill fuel when refilling.	Spilled fuel might ignite.
5	Check the air cleaner element.	Clean, if necessary.
6	Pour water into the priming water filler plug.	Otherwise the pump will overheat. Extended dry operation will destroy the pump seal.
7	Turn the fuel valve “ON”.	
8	Close the choke lever (only in cool climate).	The choke is not to be used if the engine is warm or the surrounding temperature high.
9	Turn the engine switch to the “ON” position.	
10	Move the throttle lever slightly to the left.	
11	Pull the starter grip lightly until resistance is felt, then pull briskly. Return it gently to the starter.	
12	As the engine gradually warms up, gradually open the choke.	
13	Set the throttle lever at the desired speed.	
14	Watch if the pump is operating properly and yielding water.	Continuous watching is necessary to avoid running dry.
15	Stop the pump immediately when it runs dry.	Otherwise the pump will overheat and break down.

No	Step	Reasons
16	Move the throttle lever fully to the right (i.e. close it).	
17	Turn the engine switch to the "OFF" position.	To stop the engine in emergency, just turn the engine switch to the "OFF" position
18	Turn the fuel valve "OFF".	
19	After pumping muddy, sandy or salty water, always pump clean water through the pump before storing.	Sediments settling in the pump spoil the impeller.
20	Do not allow the pump to run continuously longer than 2 to 3 hours.	After 2 to 3 hours, the pump needs to cool down, because it has no cooling system with ventilator.
21	Store the pump in a dry, clean place in the shade.	Sun overheats the pump. Rain causes corrosion.

8.28. Submersible Pumps

A submersible pump is a unit consisting of an electrical engine and a centrifugal pump submersed into the water to be pumped.

A) Types of Submersible Pumps

Submersible pumps can be differentiated according to their size, from tiny ones to huge models requiring a very strong power supply. They can also be differentiated according to the type of water they pump. In wells they can serve two purposes:

1. Permanent installation for pumping clean drinking water after the construction is completed (often used for boreholes).

2. Temporary pumping of dirty water for dewatering wells during construction.

The two purposes are different and require different pumps. The first will not be discussed here, because, in rural areas, hand pumps are more appropriate for drinking-water supply in most cases. The second is described in the following.

B) Range of Use

Submersible pumps can be designed for heads between 5 and 150 m. For dewatering wells during construction, they are suitable if the water table is 8 m or deeper.

C) Elements of a Pumping System with two Submersible Pumps

A pumping system with a transportable generator and two submersible pumps consists of the elements shown in the drawing next page.

D) Description and Specifications

In the generator, a diesel engine produces rotational movement and turns the axle of the attached generator part. Here, the mechanical energy is converted into electrical energy. The electricity is transported through the electrical cable to the pump in the well. The electrical engine of the pump converts the electrical energy into rotational movement and turns the blades of the attached centrifugal pump. The rotating blades suck in the water through the inlet and press it through the delivery pipe to a higher level (out of the well). As the energy is converted several times and transported through the electrical cable, there are a great number of losses and the efficiency of the system is low. (There are four conversions of energy: fuel - -> mechanical energy = rotation of the generator axle - -> electrical energy - -> mechanical energy = rotation of pump axle - -> water pressure).

Elements of a Pumping System with two Submersible Pumps

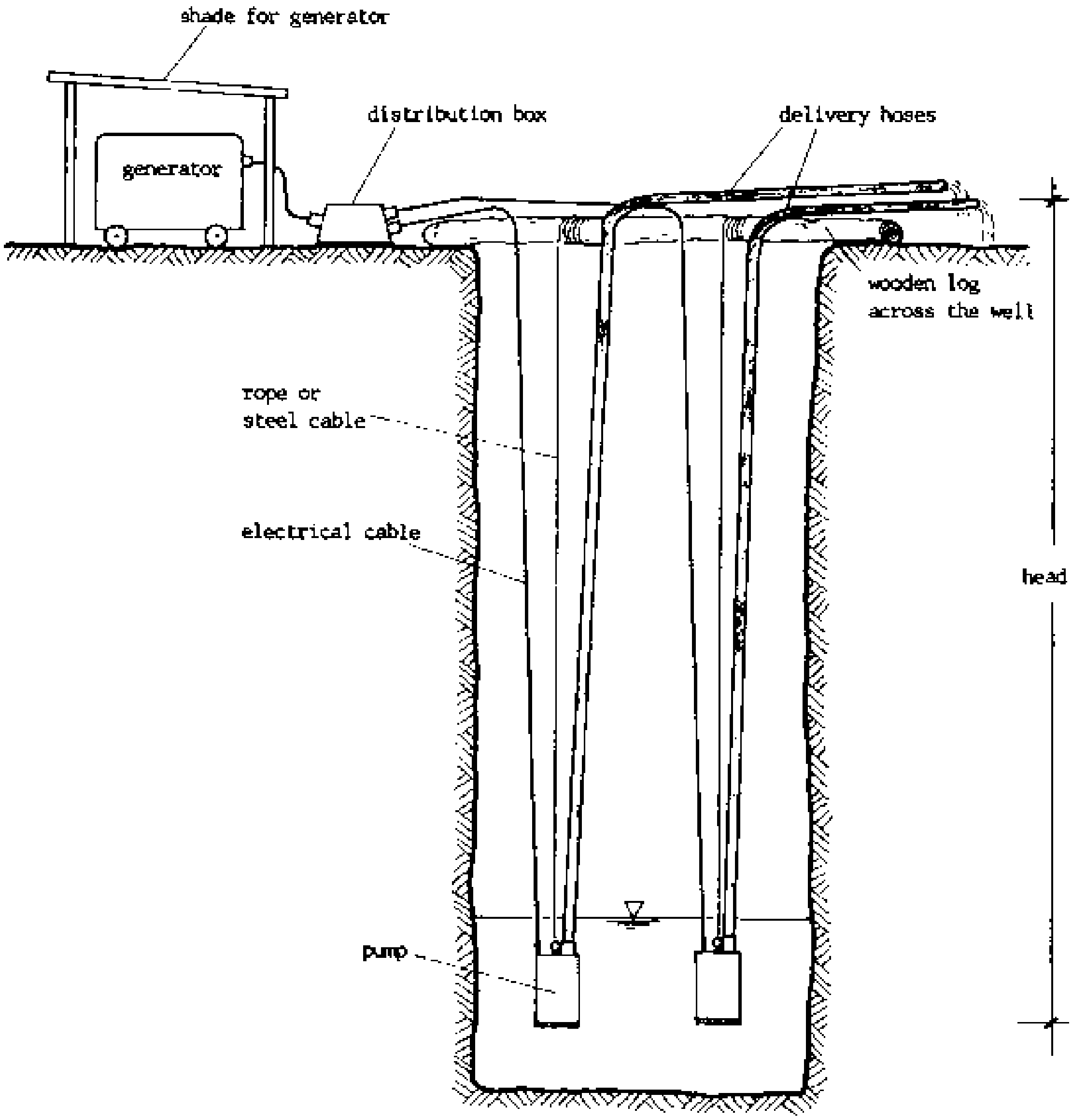

Schematic Illustration

The pump in the well always has three connections to the well head:

1. a rope or steel cable bearing the weight of pump and hoses;
2. an electrical cable supplying the energy;
3. a delivery hose or pipe for the water.

When purchasing a submersible pump check the specifications and pay attention to the following aspects:

- The pump must be designed to pump dirty, sandy and muddy water because the water in a well is never sand-free during construction.

- The generator for running the pump must be transportable and strong enough for the pump.

- The pump should be as light as possible for easy handling.

- The diameter of the outlet should be reasonable (between 1” and 2”), otherwise, the delivery hose will be very heavy and difficult to handle.

r dewatering wells are as follows:

- It is suitable for deep wells.
- It is small and can easily be lowered into the well.
- It is able to pump dirty, sandy and muddy water.

The disadvantages are:

- It needs fuel.
- The efficiency is low.
- The equipment is relatively sophisticated and can break down easily.
- Spare parts are difficult to get.
- It requires great care during operation.
- It occupies space in the well.
- Nobody can work in the well while the pump is operating.

In spite of the disadvantages, the submersible pump is often the only option for dewatering (deep) wells.

F) Step-by-Step Procedures to Operate Submersible Pumps

For dewatering wells with two submersible pumps, follow these steps:

No	Step	Reasons
1	Put the generator into the with the shade exhaust away from the well.	Otherwise the generator runs too hot and gets spoiled. Exhaust fumes are dangerous (see 8.22/1,3)
2	Check engine oil and fuel.	If not full, engine oil and fuel need to be refilled.
3	Lower pumps hanging on rope or steel cable connected with the hoses. The pumps should be well submersed, but not stand on the ground. Connect the electrical cables to the distribution box of the generator.	The hose and its joints are not strong enough to carry the pumps’ weight. If standing on ground, the pump will dig itself into the sand and get blocked.
4	Measure and record well diameter and water table.	This is necessary for calculating the discharge of the pump (see 8.34).
5	Start the generator with the crank handle. Remove the handle immediately after the generator has started. Let it run for 3 minutes.	The generator should be warm before loaded with pumping work.
6	Record the time.	see No. 4
7	Switch on the first pump. Listen for a slight change in the sound of the generator. Watch if the pump makes a sudden rotational movement when starting.	If you hear a change of the sound, the generator supplies electricity to the pump. If the pump makes a sudden movement, the impeller started to rotate.
8	Watch if water comes. Switch off if no water comes.	The pumped water has to cool the pump. If running dry, the pump will become hot and can be broken within three minutes.
9	Switch on the second pump.	The generator should not be overloaded with starting both pumps at once, because the pumps need more power during starting than during running.
10	Watch if water comes. Switch off if no	see No. 8.

No	Step	Reasons
	water comes.	
11	No people should be in the water during pumping.	If the pump has a short circuit, the person in the water is in danger.
12	If the top of the pump appears above the water table, lower the pump further.	see No. 8
13	Switch off immediately when water stops to flow. Therefore, watch the pump continuously.	see No. 8
14	Record time, water table and well diameter.	see No. 4
15	Store pumps and generator in dry clean place in the shade and handle them with care.	Sun overheats the machines; rain causes corrosion.

8.29. Drawing Water from a Well for Human Consumption

There are many different ways to draw water from a well for human consumption. Which is the best water drawing device?

There is no "best pump" for all conditions everywhere.

Instead, the most suitable solution must be selected for each area, even for each well, again and again, considering not only technical, but also social aspects.

In the following section, we give suggestions on how to select the suitable method of drawing water for certain conditions. These suggestions are subjective and based on the given criteria and priorities.

A) Criteria for Selecting the Suitable Method

We suggest that the following criteria (= guidelines) should guide our choice of the water-lifting device (in the order of their priority):

1. Protection of groundwater in the long run.

2. Durability, maintenance and repair.

3. Protection of health.

4. Provision of water for the majority of the population.

5. Acceptability by the community.

6. Economic suitability.

On No. 1.:

Protection of groundwater in the long run, i.e. preventing the aquifer from being exhausted, is the first priority. To install a water supply system which draws more water from the aquifer than is recharged by rain or from other sources, means to deceive the users. They will get used to the abundant water supply and plan their activities accordingly, only to get into great trouble when the water table drops. Such installations are also irresponsible for the future generations. The aquifer might not be able to provide a large water supply in the long run, but a limited water supply might be possible for generations. See also 8.8/3f.

On No. 2.:

To consider durability, maintenance and repair is essential, too. The water supply installation must have a realistic chance of being kept-up for years. It is easier to reach a remote place with high-level technology for the short construction period, than to reach it continuously with middle-level technology for running and maintenance. We need to look honestly into the question of whether the infrastructure, the fuel supply, the spare parts' supply and the skilled labour are available to run and maintain the proposed water supply system. Often, the local people in the village are more realistic about the issue than planning personnel and politicians. See also 8.24/2-6.

On No. 3.:

To provide clean and safe water is an obvious criterion (= guideline), although not the first priority. It comes after the two already mentioned. To provide clean water for a short period only is no real improvement for the health situation of the users. The water supply in large areas and for many people is in such a state that the people struggle to get any water rather than good water. This is a sad, but true fact. Under these circumstances, provision of easily available and sufficient quantities of any water is already an improvement, even an improvement in health (enough water for cleaning and washing, less efforts spent on securing the water supply). Providing clean water alone is not sufficient as well, because the general situation, poverty and the level of knowledge might prevent the users from keeping the water clean after taking it from the supply. Therefore, stressing the cleanliness of the water, while the other factors remain untackled, is not enough. See also 8.5 and 8.6.

On No. 4.:

We have to examine exactly who is to benefit from the proposed water system. We suggest as a guideline to try to supply water to the majority of the population, rather than to a minority. It is questionable spending lots of money and resources on high level water supply for a priviledged minority, rather than a lower level water supply for many. See also 8.2.

On No. 5:

The chosen water supply system must be understood and accepted by the users. However, this depends very much on, and can be influenced by, relevant education and community development work. See also 8.38 and 8.39.

On No. 6.:

The system should be within the economic means of the users; if not the installation, then at least the running costs. See also 8.3.

B) Methods of Drawing Water for Human Consumption from Wells

The diverse water-lifting devices are described in 8.24. Those devices suitable for drawing water for human consumption can be arranged into three main groups with variations. These three groups also represent different levels of sophistication:

C) Water-Lifting with Bucket and Rope

The simplest way to lift water with a bucket or another container and rope (see 8.24, No. 1, 2).

1. Advantages

Its advantages are:

- The equipment can be completely local, if necessary, consisting of gourds and ropes from local fibres.

- No outside input is required.

- No maintenance structure is required.

- The method is very reliable.

- No water is going to be wasted because the amount of water pulled is limited.

- Large numbers of animals cannot be watered.(This could also count as a disadvantage). Therefore, overgrazing due to availability of water cannot occur.

2. Disadvantages

The disadvantages are:

- The water is not protected from pollution.
- The amount of water which can be pulled is very limited.
- The depth from which the water can be pulled is limited.
- The method is tiresome and time consuming.

3. Suitability

Drawing water with bucket and rope fulfils guidelines No. 1, 2, 4, and 6. Guideline No. 5 is fulfilled in many cases. Guideline No. 3 is not fulfilled in most cases and improvements are advisable.

Drawing water by bucket and rope is suitable if the infrastructure for hand pump installation, operation and maintenance is not available in the long run. In that case, improve the situation within the given circumstances by

- providing enough wells;
- constructing the wells with a lining and, thus, digging deep into the water table;
- providing an elevated well mouth with a lid;
- providing a proper concrete apron;
- conducting a health education campaign.

D) Water-Lifting with a Hand Pump

Hand operated pumps or other simple devices are the next level of technology for lifting water (see 8.24, No. 3-14, 16-18,22).

1. Advantages

The advantages are

- The well can be sealed and protected from pollution.

- The maintenance is relatively simple and local people might be able to learn it.

- No fuel is required.

- The method is less tiresome for the users than C).

- No water is going to be wasted because the amount of water pumped is limited.

- Large numbers of animals cannot be watered.(This could also count as disadvantage). Therefore, overgrazing due to availability of water cannot occur.

- Greater depth can be reached than with the method under C).

2. Disadvantages

- The pump might be available only from abroad.

- The spare parts' supply must be secured. It might require foreign currency and an organisation to acquire it.

- People able to repair the pump must be available.

- A higher degree of organisation within the community is required than for the method under C).

- The method is more expensive than C).

- Only one person can draw water at a time.

- The depth is limited to 70-80 m, in exceptional cases up to 110 m.

- Some people can try to get control and make private profit from a hand pump on cost of the community.

3. Suitability

Drawing water with a hand pump fulfils the guidelines No. 1 and 4. Guideline No. 2 is fulfilled if the infrastructure for maintenance is available. Guideline No. 3 is fulfilled if the well is properly constructed and the platform has no cracks. Guideline No. 5 depends on information and health education. Guideline No. 6 depends on the resources of the community.

To achieve water supply by hand pump is a goal for all rural communities and many urban communities.

Install a hand pump only if

- operation and maintenance can be secured in the long run;
- the community is organised to take the responsibility of the pump;
- women are being trained for hand pump caretaking and repair;
- there are enough resources to construct the well head properly;
- the hand pump can be installed properly; When installing a hand pump, take care
- to provide enough wells;
- to conduct a health education campaign;

Do not install a hand pump if maintenance cannot be secured in the long run.

Water-Lifting with Fuel Powered Pumps into an Elevated Tank

This method is considerably more sophisticated than the two before. The water is pumped into an elevated tank from where it is supplied in pipes either directly to households or to public taps (see 8.24, No. 20, 23, 27-29, 31,32).

1. Advantages

The advantages are

- The well can be protected from pollution.
- Water can be pumped from greater depths than by methods C) and D).
- Piped water supply becomes possible.
- The method is less tiresome for the users than methods C) or D).

2. Disadvantages

The disadvantages are

- The pump and other parts of the installation most likely come from abroad.

- A constant supply of fuel is required.

- The spare parts' supply must be secured, most likely from abroad.

- Highly skilled people are required for installation and maintenance.

- Skilled labour is required for the daily running.

- A structure is required to organise installation, supplies and maintenance.

- The costs are very high.

- Waste of water is very likely.

- There is a danger of exhausting the aquifer and of lowering the water table in the long run.

- Overgrazing and desertification are possible if a large number animals are attracted by the well.

3. <u>Suitability</u>

Water supply by fuel powered engine pump and elevated tank should fulfil guideline No. 3. Whether the method fulfills the other guidelines, depends on the situation and has to be questioned.

Water supply by fuel powered engine pumps and elevated tanks is not a reachable goal for all rural communities, and is a reachable goal for some urban communities.

Install such a system only if

- it does not exhaust the groundwater in the long run;

- operation and maintenance can be secured in the long run;

- fuel supply can be secured in the long run;

- no flush latrines are to be supplied by the system and, thereby, large amounts of water wasted; see also 8.37/7 and 9.8/2;

- the community is organised to take responsibility for the system;

- women are being trained for operation and maintenance;

- the community can afford the system;

- the system is safeguarded against being exploited by a few people;

- you have to supply densely populated town areas with public taps

When installing this system, take care to conduct a health education campaign. Do not install this system at all in scarcely populated rural areas with many animals because of the danger of overgrazing and desertification.

8.30. Hand Pump Parts and Functions

It is very important for a technician to know the names of the parts of a hand pump and to understand their functions. This background knowledge will enable her/him to understand why the hand pump has to be installed and repaired in a certain way.

The parts and functions are explained here for the INDIA MARK II hand pump; other hand pumps of a similar type consist of principally the same parts. The different types of handpumps are explained in detail in No. 18 of the bibliography.

A) Parts of Pump Head Assembly

For learning about the parts of a hand pump, disassemble a pump and get familiar with the parts.

CROSS-SECTION

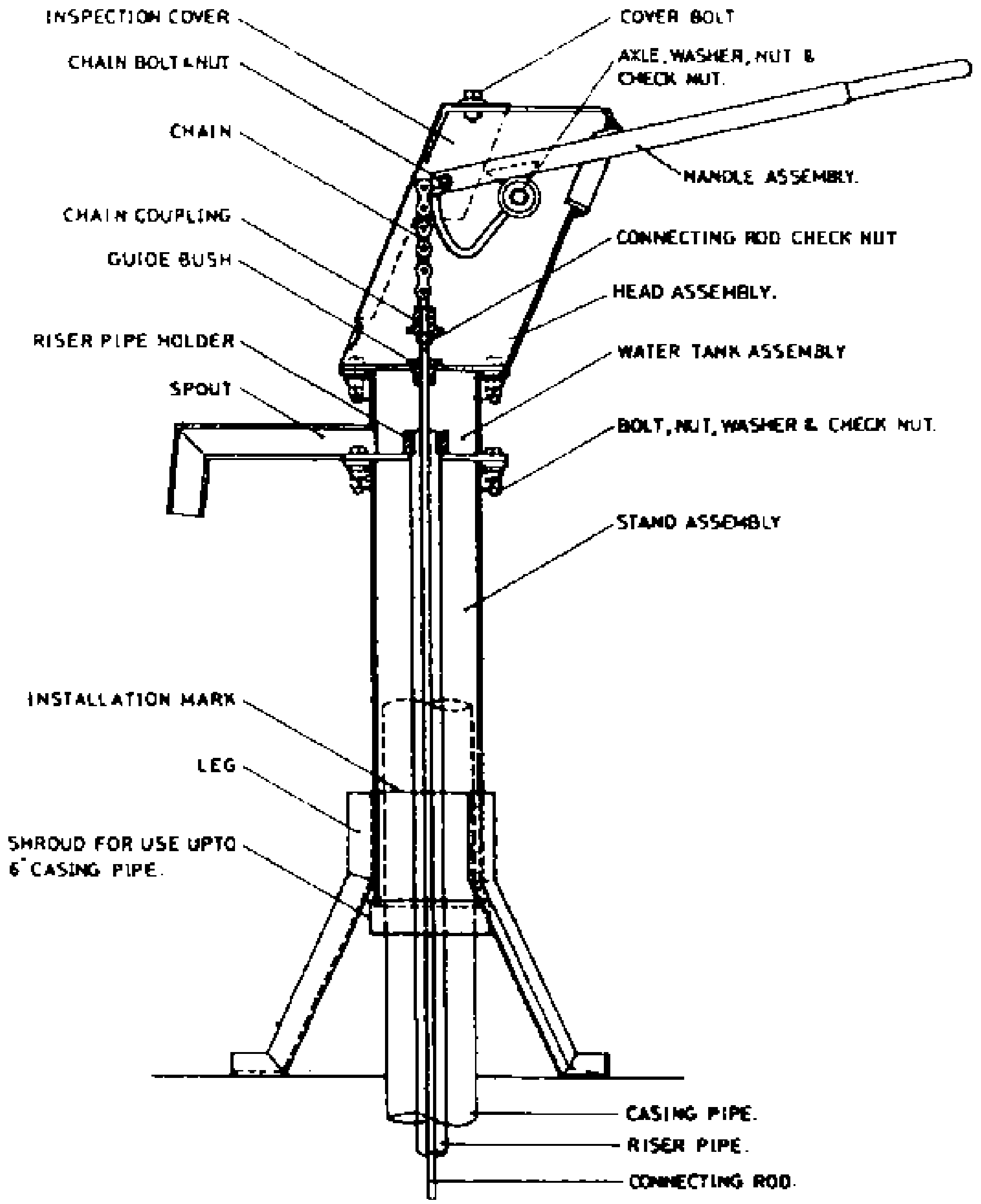

B) Function of Pump Head Assembly

The operation of a hand pump has two distinct and opposite phases:

1. Phase

- handle moving downwards
- rod moving upwards

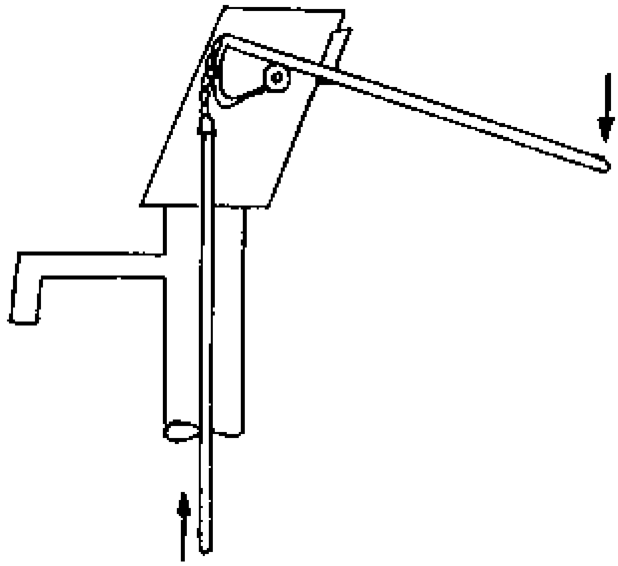

2. Phase

- handle moving upwards
- rod moving downwards

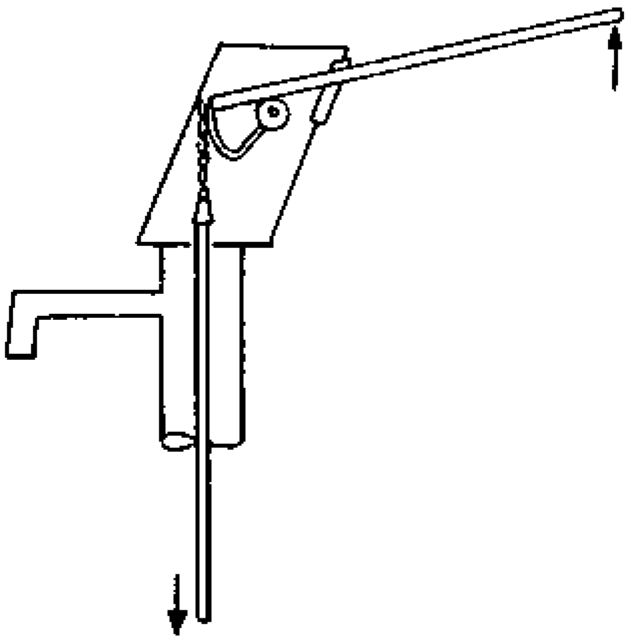

UP and DOWN movement of handle results in DOWN and UP movement of rod.

The pump head assembly, as shown here, has a chain link. The rod is lifted by an active downwards stroke of the handle. The rod moves downwards and, thus, lifts the handle by itself because the weight of all the rods together overcomes the friction and the weight of the handle. This is the case if the pump cylinder is installed at about 20 m or deeper.

If the cylinder is installed in a depth less than that, the weight of the rods is not enough, and the flexible chain cannot push the rods down. In that case, a solid link is required between the handle and the rod so that the upward movement of the handle can push the rod downwards. The disadvantage of the solid link connection is that there will be a slight lateral (= horizontal) movement of the rod with each stroke. The pump head with solid link is suitable for wells up to 20-25 m depth.

C) Parts of the Cylinder Assembly

Disassemble a pump cylinder and get familiar with its parts:

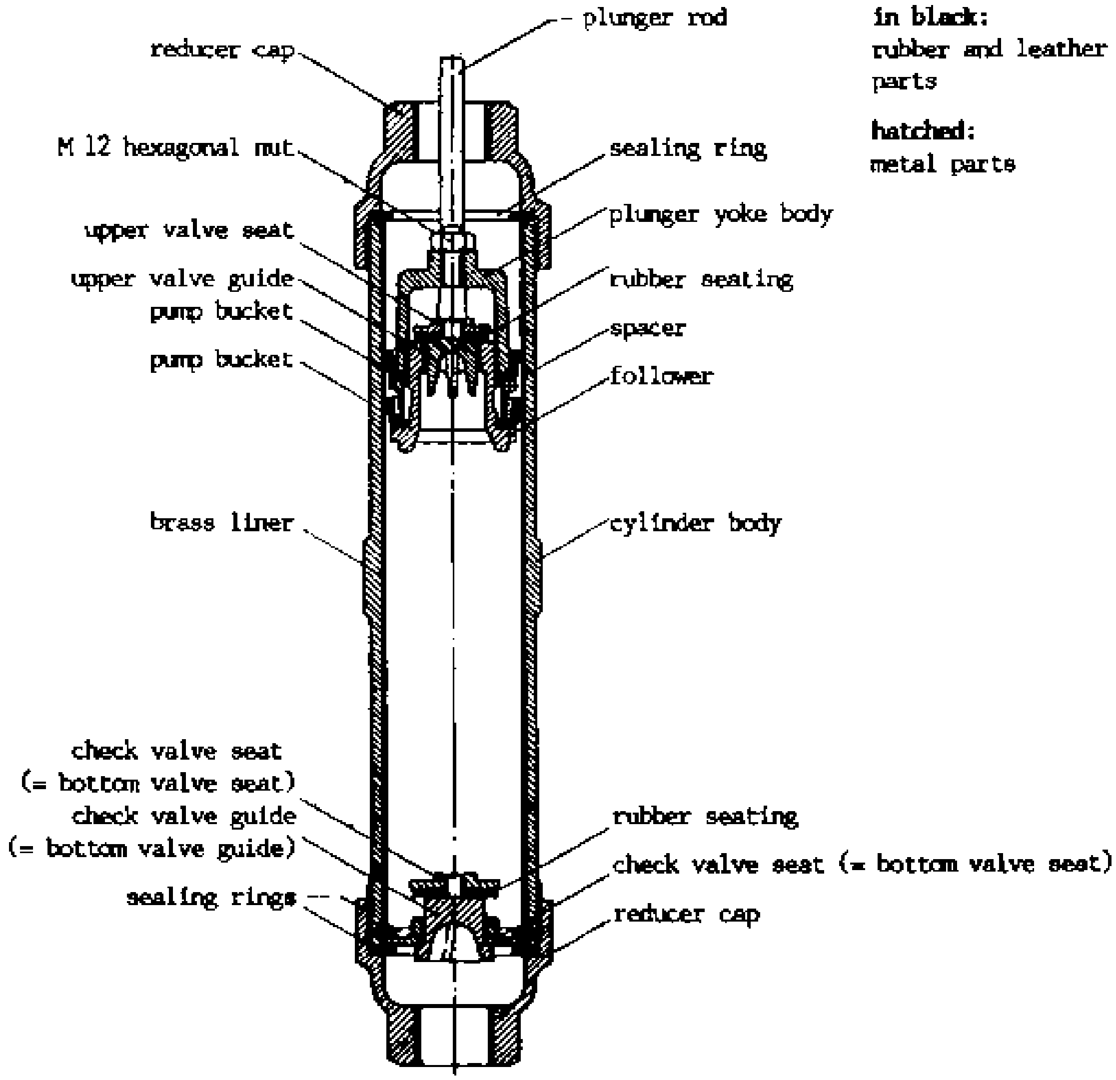

D) Function of the Cylinder Assembly

The cylinder operates in two distinct phases as well:

1. Phase

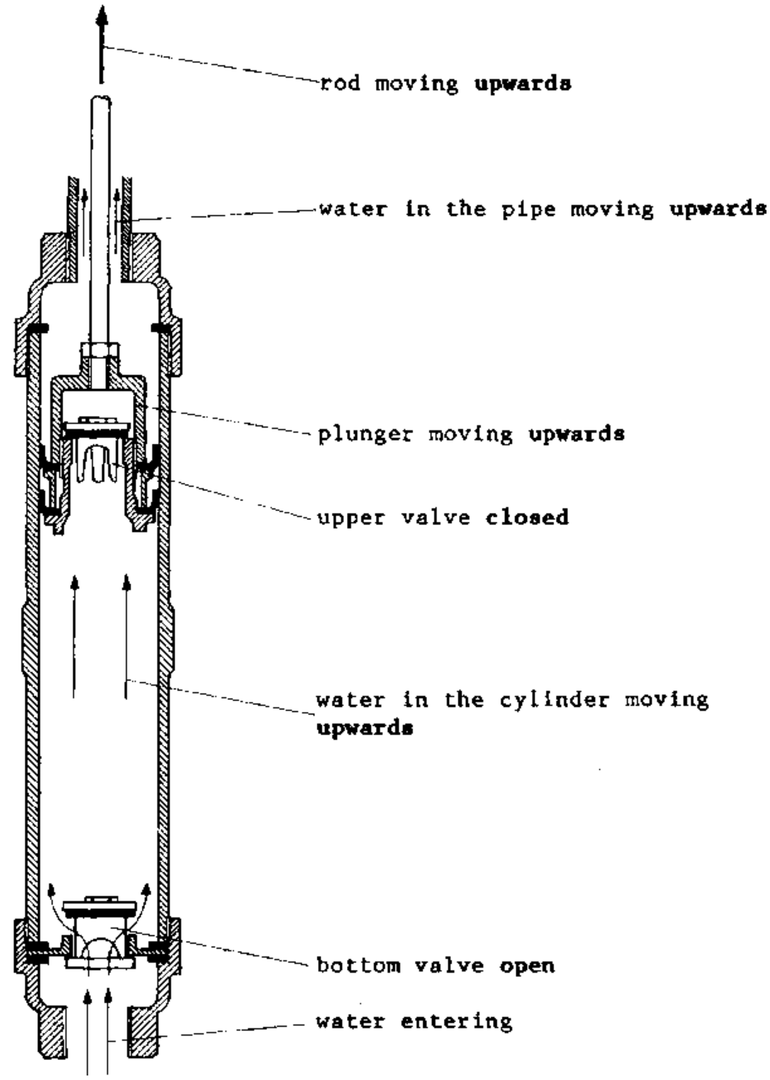

Schematic Illustration; some details left for sake of clarity; valves in side-view.

How do the valves open and close?

1. The water in the pipe tries to move downwards by gravity → This closes the upper valve. 2. The plunger moving upwards creates suction → This opens the bottom valve.

2. Phase

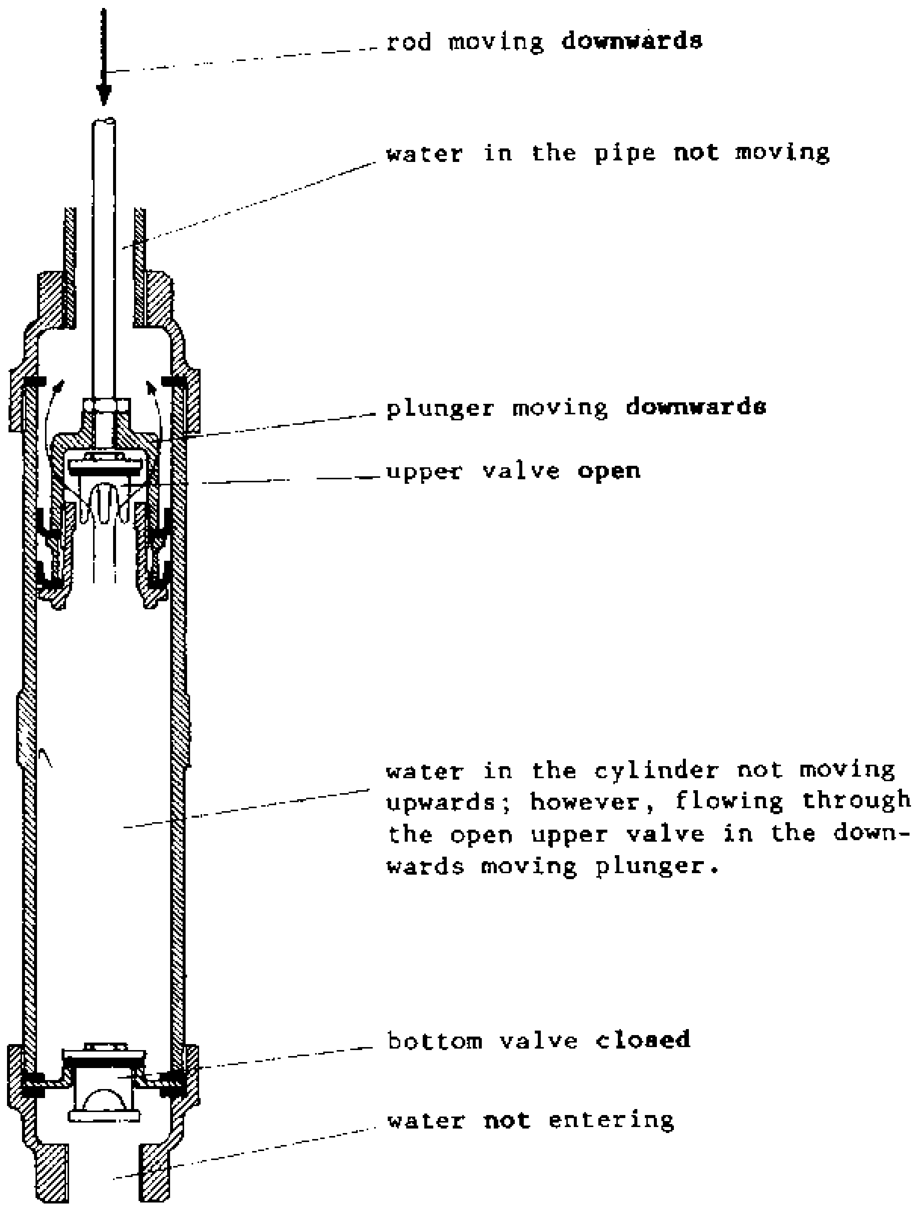

Schematic Illustration: sane details left for sake of clarity; valves in side-view.

How do the valves open and close?

1. The water in the cylinder tries to move downwards by gravity → This closes the bottom valve. 2. Rod and plunger are moving downwards → The resistance of the water in the cylinder opens the upper valve.

The two valves open and close alternately and, thus, the water is lifted in steps (not continuously!). The valve (consisting of seat, rubber seating, and valve guide) moves up and down (open and closed). It is essential that the valves close watertight. This is ensured by the rubber seatings of the valves which must be intact.

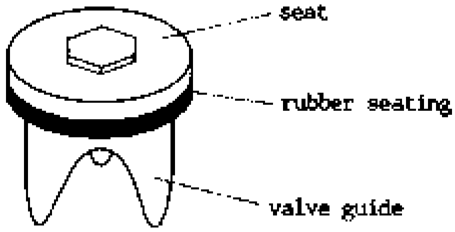

The pump buckets (= leather cups) provide the watertight sealing between the plunger moving up and down, and the inner wall of the cylinder (with a brass liner). Although the pump buckets seal, they allow the plunger to move. If the pump buckets are worn out, the sealing will not be complete and the yield of the pump will decrease. The pump buckets are the parts which usually wear out the quickest, especially, if there is sand in the cylinder due to improper installation. They need to be replaced regularly.

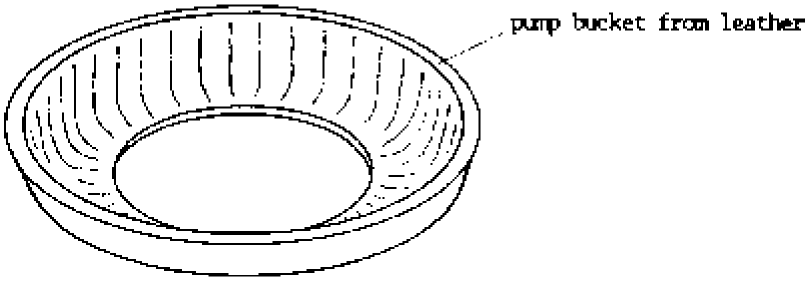

8.31. Hand Pump Installation

There are specific manuals for each type of hand pump, published by the manufacturers (e.g. No. 22 in the bibliography for the India Mark II hand pump). Follow the steps of the manual when installing or repairing a hand pump. Some general principles, valid for all kinds of different pumps, are compiled here.

A) Lowering and Lifting the Riser Main Pipe

During installation and repair the riser main pipe (= rising main = = rising pipe) has to be lowered into and lifted from the well. This can be done in different ways depending on the depth of the well.

1. Blocking the Riser Main Pipe

While lowering the riser main pipe, one must stop in between to join the next following pipe. For this operation, the riser main pipe must be blocked temporarily. This can be done

- by a special self-locking clamp,

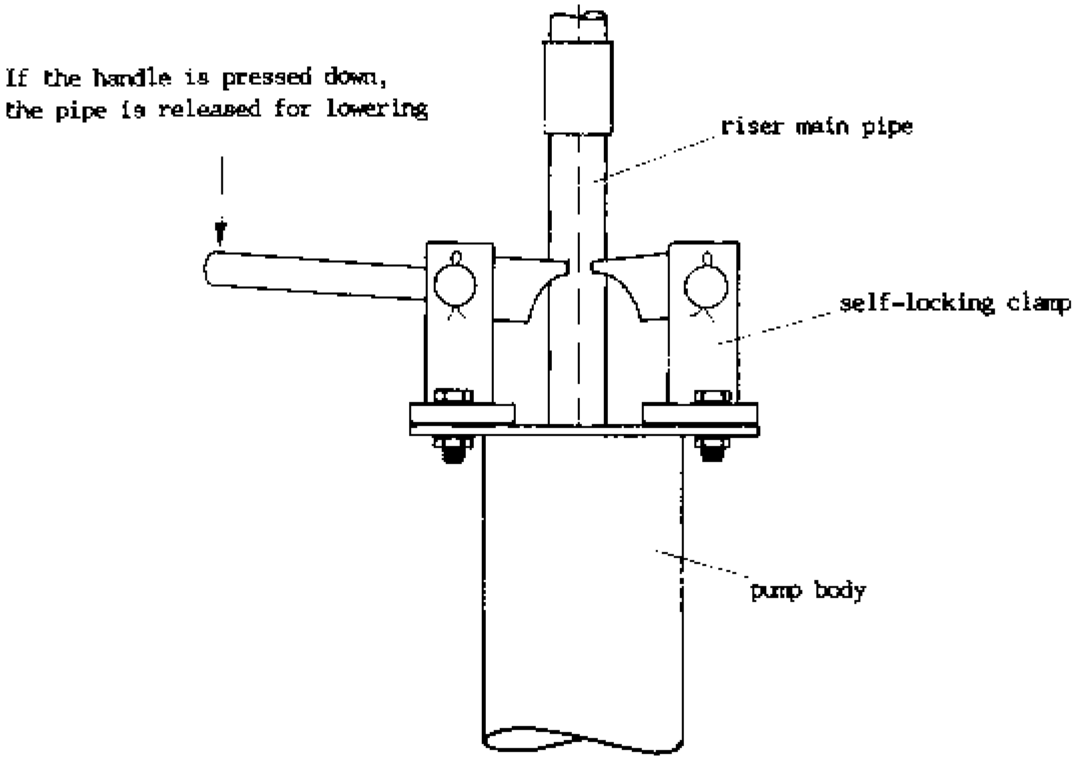

- by an ordinary pipe vice (see 6.3/34), laid across the pump body,

- by pushing a socket (9 3" over the two handles of a pipe wrench (6.3/34)

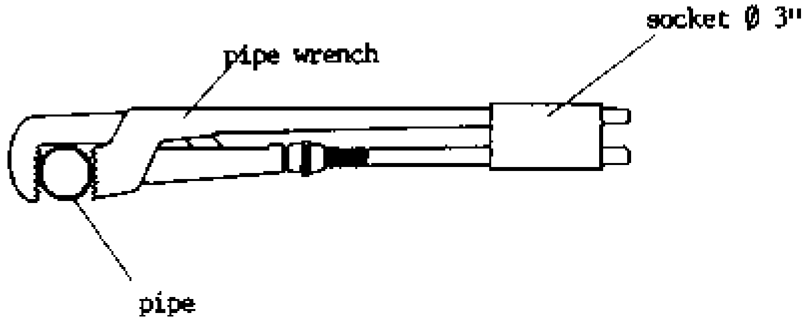

In any case, make sure that a socket is fixed to the top end of the riser main pipe. This is an extra precaution.

The lowering itself can be done by one of the following methods:

2. Lifting by Hand

For very shallow wells (up to about 10

m) the riser main pipe (together with the cylinder and the rods) can be lifted by hand directly. Enough and well coordinated people are necessary for that.

3. Lifting by Lifting Spanners

For medium depth wells (up to 35-40 m), the pipes can be lifted with 3 to 4 lifting spanners which hold the pipe by friction and provide an advantageous lever arm.

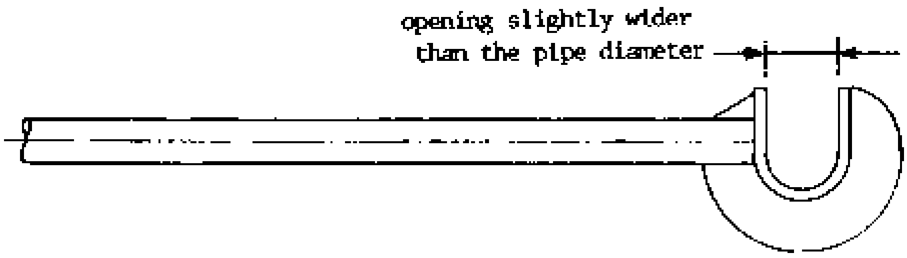

Lifting spanners can also be manufactured locally from metal pipe Ø 1”

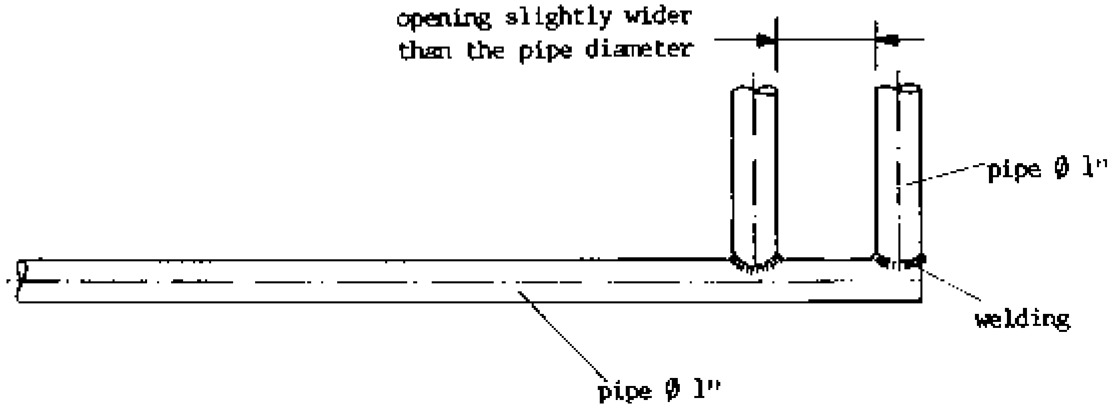

The technicians place the lifting spanners around the riser main pipe and get hold of it by pressing the handle upwards. They must be well coordinated.

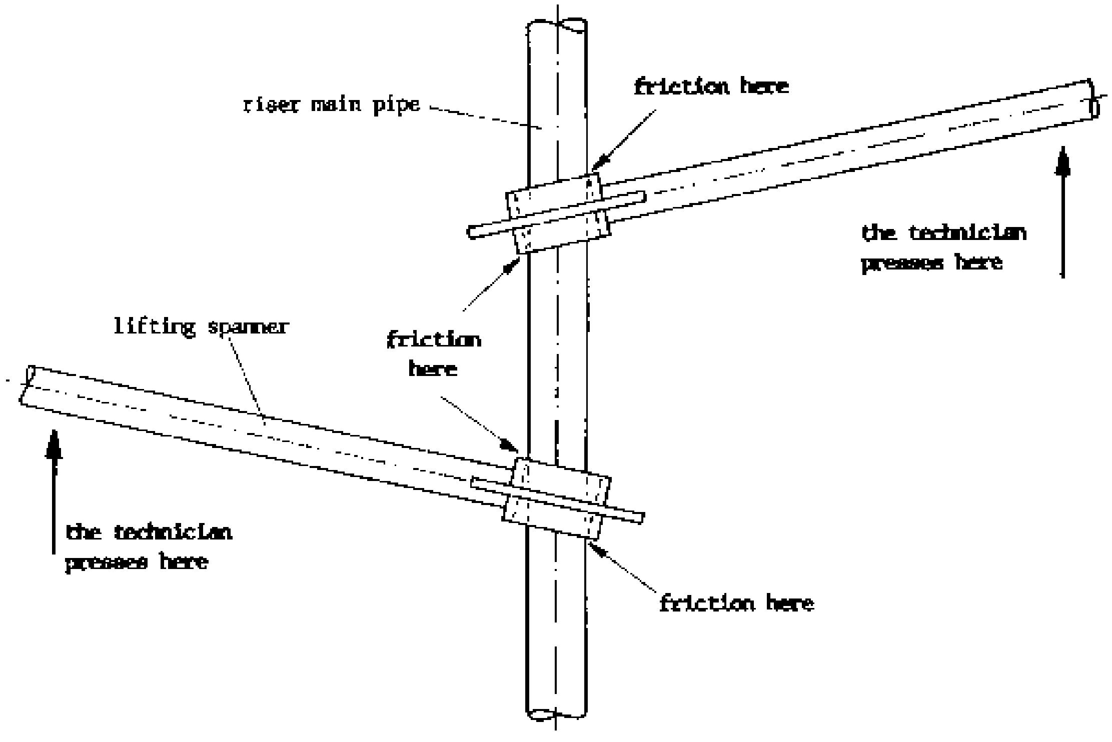

4. <u>Lifting with Lifting Spanners and Simple Scaffold</u>

For deep wells, lifting with lifting spanners can be made easier with a scaffold made from a pipe Ø 2” with steps. This scaffold is fixed to the pump body with U-bolts. A technician at the top can easily direct the pipes while lowering or lifting.

Design: Norwegian Church Aid - Sudan Programme, Torit, Sudan

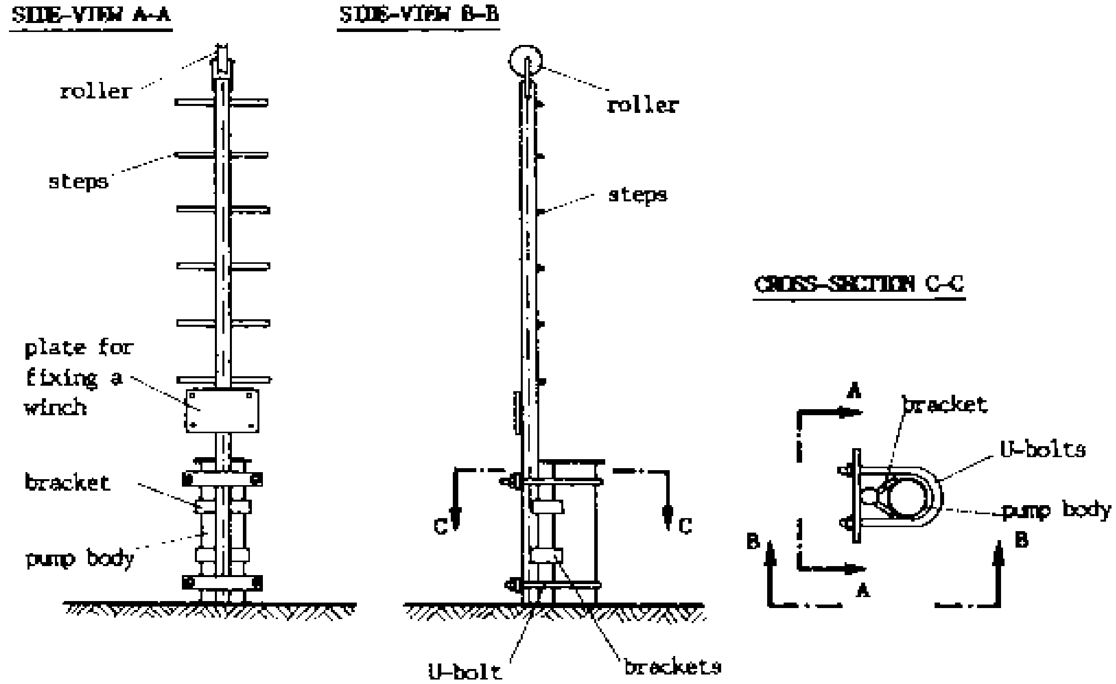

Additionally, a small winch can be fixed on the scaffold and the steel cable directed over a roller on the top.

5. Lifting with Tripod, Winch and Steel Cable

It is difficult to lift pipes from depths more than 40 m. In this case a light weight tripod (see 8.17/13) and a small winch can help. The riser main pipe is fixed to the steel cable with a chain pipe vice (see 6.3/34).

B) Tightening the Joints of the Riser Main Pipe

Watertight joints of the riser main pipe are essential, otherwise the yield of the pump will decrease. Tight joints can be achieved with the following measures:

1. Clean all threads with a wire brush and lay the pipes on two pieces of timber, not directly on the ground. The threads must be completely sand-free when you join them. Sand on the thread prevents the thread from fully closing, and thus causes leakage. Constant leakage causes corrosion, and the pipe is likely to break sooner at the thread.

CROSS-SECTION TROUGH JOINT WITH SAND

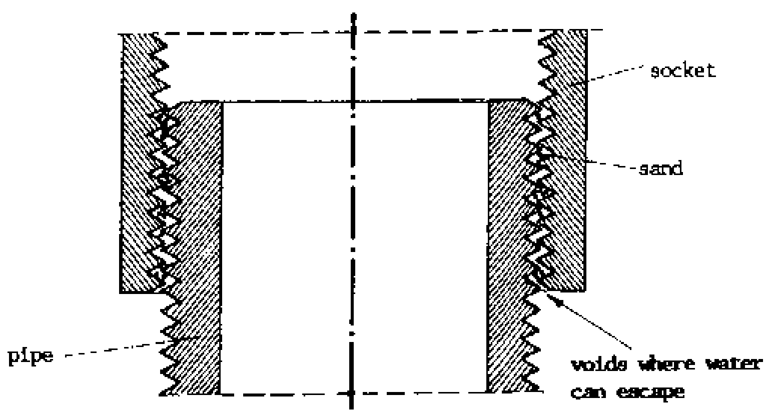

2. Smear jointing compound on the thread or cover the thread by thread-tape before tightening. This materials fill the tiny voids between the threads and make the joint watertight.

3. Tighten all joints properly, but do not overdo it. Handle the pipe wrenches as described in 8.32/14.

C) Handling the Pump Rods

Handle the pump rods as follows:

1. Clean the threads of all pump rods.

2. Grease the threads if they are corroded.

3. Take great care not to bend a pump rod.

4. Do not install any bent pump rod.

5. Tighten the joints of the rods properly.

6. Hold the rod by a rod-vice when you cut it to length, to avoid bending.

7. When threading the pump rod, prevent cuttings from falling into the riser main pipe by a piece of cloth (cuttings quickly wear out the pump buckets).

D) Handling the Pump Cylinder

Handle the pump cylinder as follows:

1. Check it before you install it even if it is new.
2. Open the cylinder and the plunger and tie all elements properly.
3. Tighten the valve seats, but do not squeeze the rubber seatings.

E) Handling the Pump Head

Handle the pump head as follows:

1. Only untie the pump head as much as necessary for installation. Do not dismantle axle and handle unnecessarily.

2. Grease the chain properly.

3. Grease the threads of all outside bolts and nuts to prevent corrosion due to rain. Thus it will be easy to open them any time.

F) Locating the Pump Cylinder

The cylinder must be installed at different positions in a borehole and in a hand dug well.

1. Pump Cylinder in a Borehole

The bottom of a borehole is not closed with a filter. Therefore, never install a cylinder in a borehole less than 6 m from the bottom of the borehole. Apart from that, install in a borehole a number of full length (3m) pipes, because it does not matter if the cylinder is higher or lower by 1 or 2 m as the water column is normally high. Join an extra pipe to the bottom of the cylinder. This forces the water to enter through the pipe. Eventually, sand would settle and clean water will enter the cylinder.

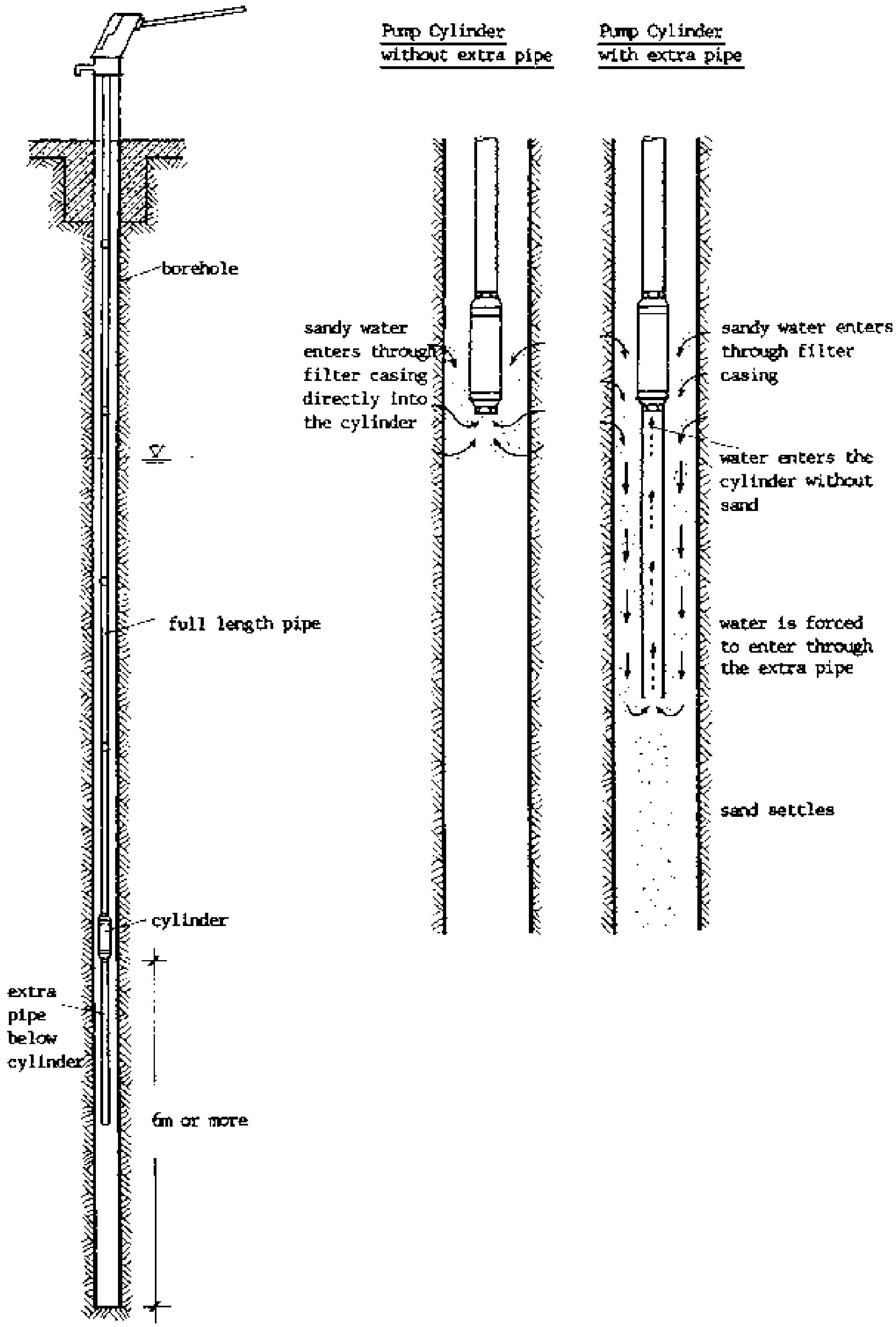

Schematic Illustration

2. <u>Pump Cylinder in a Hand Dug Well</u>

The water column in a hand dug well is limited and, therefore, the cylinder has to be installed as deep as possible to utilize the water reservoir fully.

There must be a filter in the well bottom (see 8.20/1f). Install the cylinder so that its bottom is about 15-20 cm above the top of the filter. This will most probably require cutting and threading of one riser main pipe. To get the correct length, you can proceed as follows:

- Measure the distance between the top of the pump body and the top of the filter with a plumb loaded measuring tape.

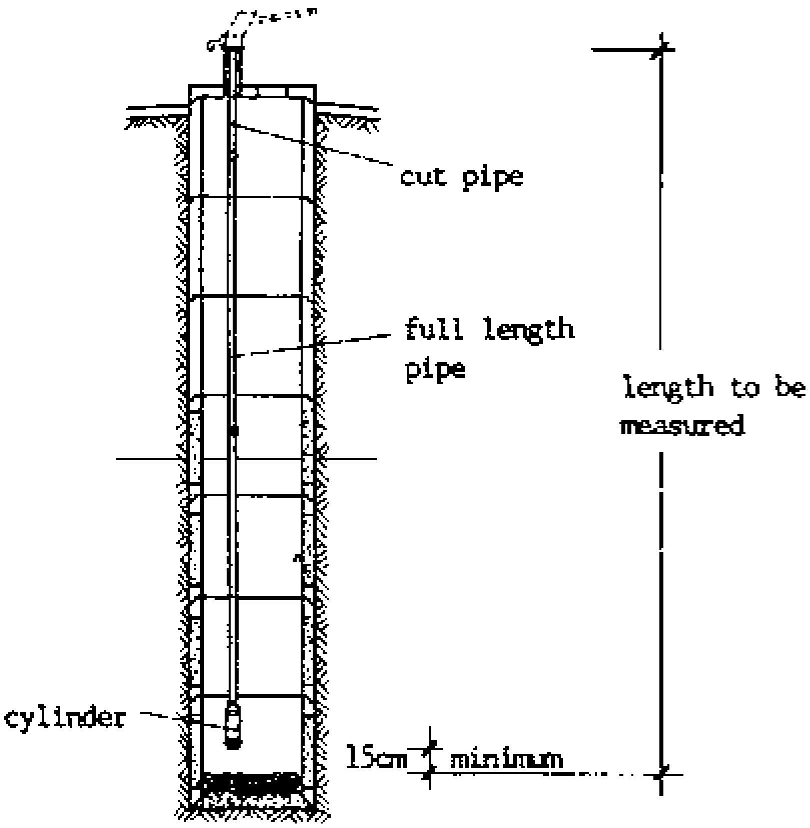

SCALE 1:80

- Lay the measuring tape on flat ground. Lay the pump cylinder and the pipes with sockets beside it. Overlap them according to how they will be tightened. Leave 15 cm for the gap between filter and cylinder. Add 3 cm for the thread connection with the water tank.

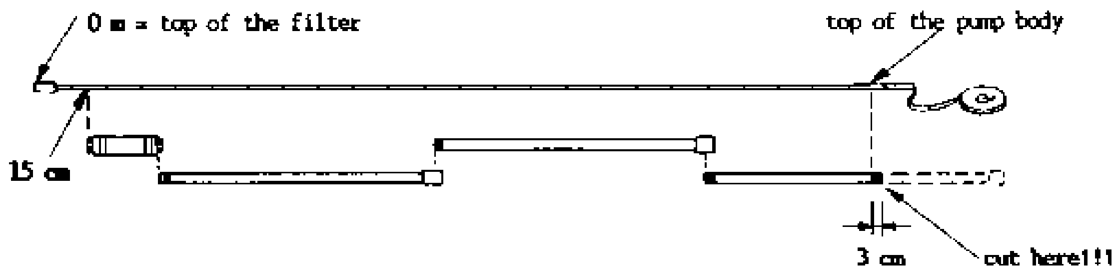

Not to scale!

- Mark where you have to cut the last pipe.

Be very careful when determining the length of the last pipe. Too short means that you waste a part of the water reservoir and the pump might unnecessarily run dry during dry season. Too long means that the cylinder might sit on the filter. By the method above you are less likely to make mistakes than by calculation.

8.32. Basic Plumbing

Plumbing is the installation and repair of pipe systems for water supply (or other purposes), like a hand pump or the water distribution system in a house. The most basic knowledge about plumbing is compiled here.

A) Threads

The different types of threads for both bolts/rods and pipes are described and compared in the following chapters.

1. Thread Types

Threads can be differentiated according to six pairs of opposites:

a) Internal/External Threads

Name(s)	Internal Thread = Female Thread	External Thread = Male Thread
drawing		
thread cutting operation	to cut a thread = to tap a thread	to cut a thread
tool for thread cutting	tap	die
handle of thread cutter	tap wrench	die stock = die handle

Internal and external threads of the same size fit together and can be screwed together to form a joint.

b) Right Hand/Left Hand Threads

Right hand threads are tightened clockwise, left hand threads opposite (= anti-clockwise). Right hand threads are usually used, left hand threads are not common.

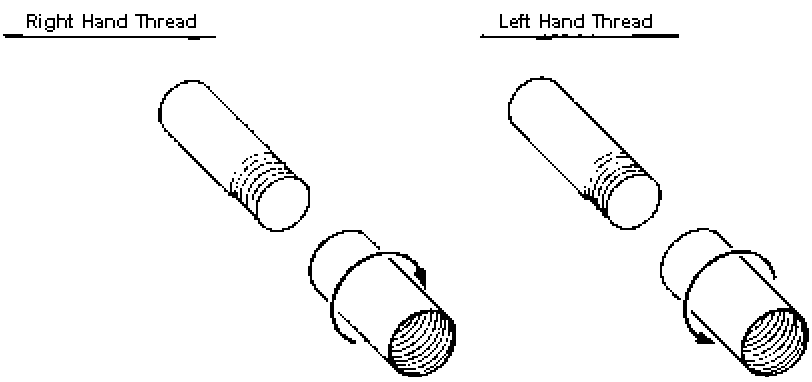

c) Parallel/Taper Threads

A parallel thread (= cylindrical thread = straight thread) has the same diameter from beginning to end. The threads look clearly cut all over.

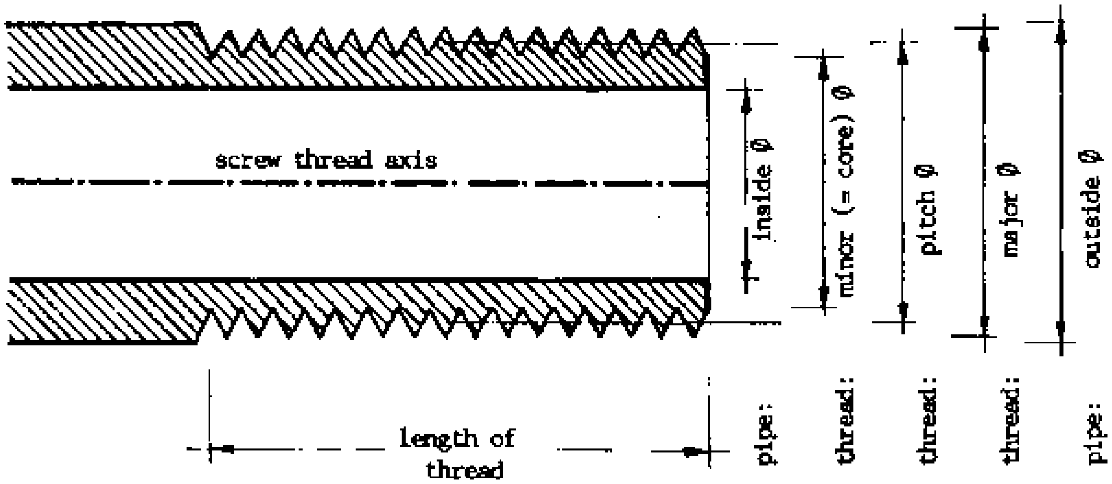

A taper thread (= tapered thread = conical thread) is growing gradually smaller towards one end like a cone. The slope of the thread is the taper/length of thread, e.g. 1:16. A taper thread can easily be recognized because it looks imperfect at the end.

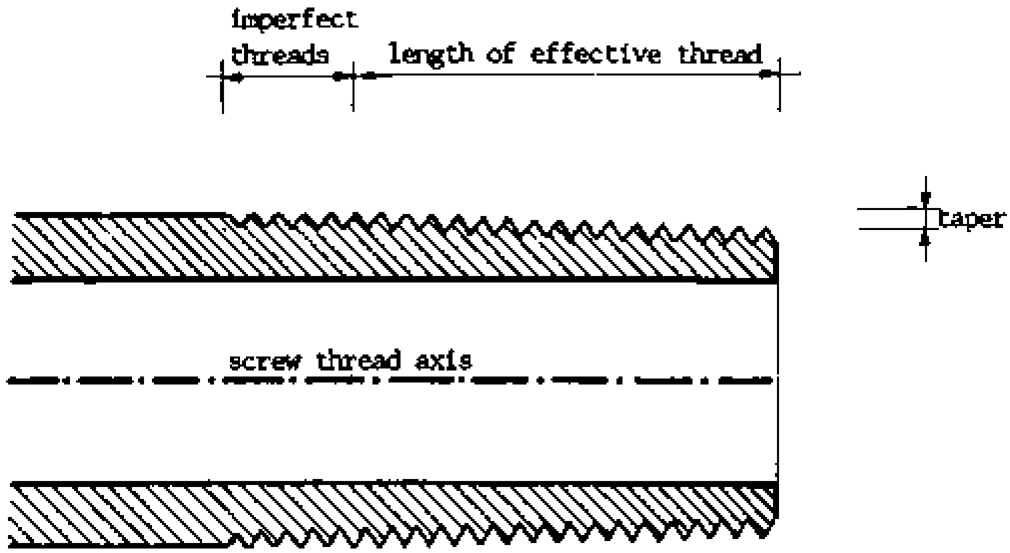

Bolts and nuts have always parallel threads to ensure maximum transmission of force along the full length. Pipes can have parallel or taper threads. Tapered pipe threads are much more common, because they are easily tightened watertight to avoid leakage. Tapered pipe threads do not have a high resistance against bending. In emergency cases, a tapered thread can be screwed to a parallel thread of the same size, but the joint will not fit exactly.

d) Coarse/Fine Threads

Coarse threads have fewer threads per inch than fine threads. Coarse threads are more common, fine threads can transmit more force. Whether a thread is coarse or fine is indicated either by the pitch or the number of threads per inch (= TPI).

The pitch is the distance between two threads and indicates how dense the total thread is (see drawing next page).

Metric threads are marked by their pitch:

$$\text{pitch (in mm)} = \frac{1}{\text{No. of threads per mm}}$$

For threads in inches, the following is valid:

$$\text{pitch (in inch)} = \frac{1}{\text{No. of threads per inch}} = \frac{1}{\text{TPI}}$$

For threads in inches, the TPI is indicated.

e) <u>Threads with Sharp Edged Profile/Threads with Rounded Edged Profile</u>

Threads can be cut with either sharp edges or with rounded edges:

Sharp Edges

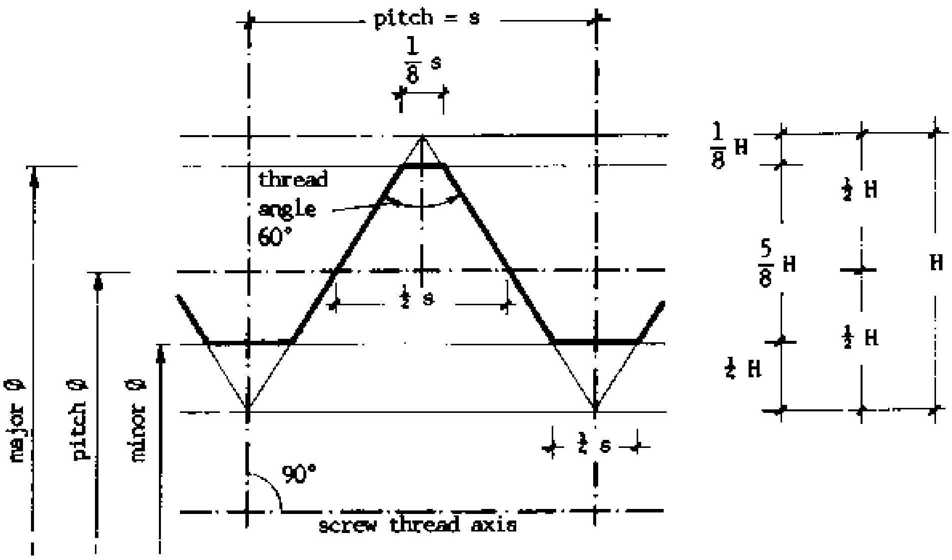

Rounded Edges

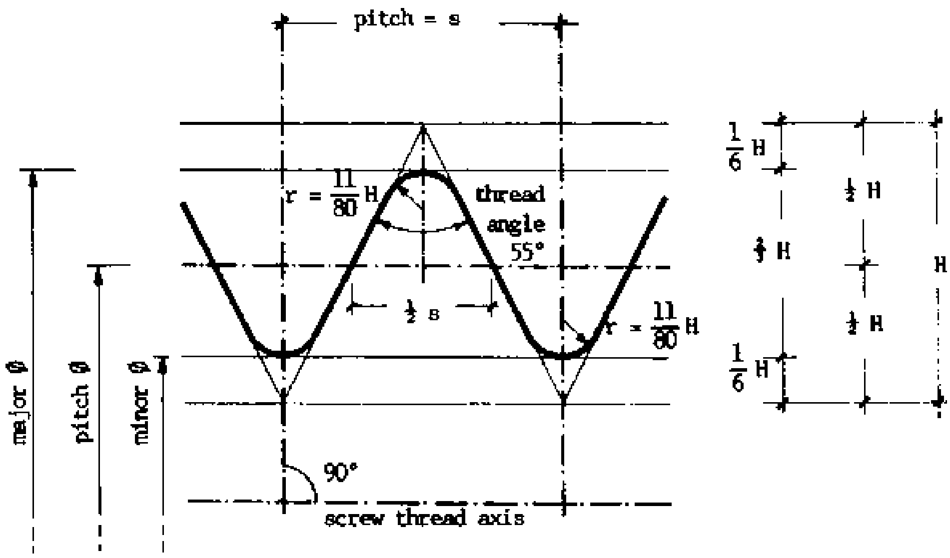

Sharp edges are more common. Threads with rounded edges are stronger, but uncommon.

f) <u>Threads for Bolts and Nuts/Threads for Pipes</u>

Threads can be categorized in two main groups: threads for bolts and nuts (and rods), and threads for pipes. Within the two groups a variety of different threads exists according to different countries and traditions. The main thread types are listed on the following pages.

2. <u>Thread Standards for Bolts and Nuts</u>

The purpose of a bolt is to press the objects between the nuts together and to connect them thus by friction. A bolt has to transmit force.

The two parts joined together are shown in Cross-Section, bolt and nut are shown in Side-View;

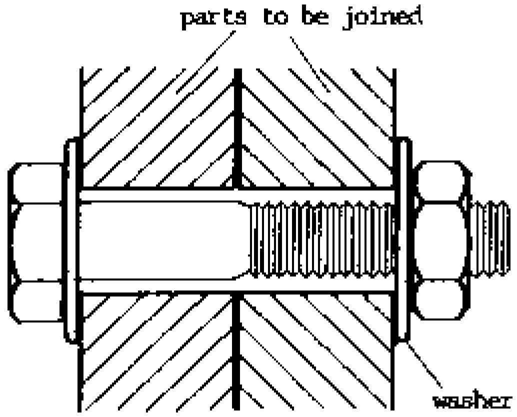

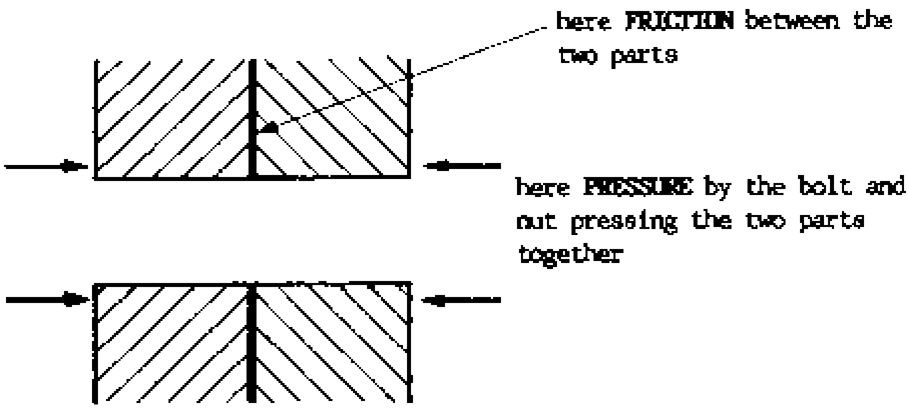

Sometimes, the following signs are used for a bolt and nuts:

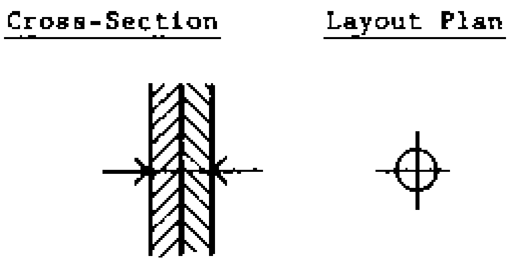

See also 6.1/17,19,23.

The function of the washer is to prevent the nut from getting loose.

Threads for bolts and nuts are both internal (on the nut) and external (on the bolt). Threads for bolts and nuts are mostly right hand, but left hand threads can be found, too.

Threads for bolts and nuts are always parallel.

Thus, maximum force can be transmitted along the full length of the thread; the thread is exactly fitting.

Threads for bolts and nuts can be coarse or fine; they can have sharp or rounded edges.

The following thread types are used for bolts and nuts (for sizes see thread tables):

a) Metric Coarse Threads M

- thread for bolts and nuts;
- measured in metric system in mm;
- specification (example):

M 10 × 1.5 (= major Ø in mm × pitch in mm)

- both internal and external threads;
- mostly right hand threads; left hand threads uncommon;
- always parallel thread;
- coarse thread;
- sharp edged profile with 60°: 
- common in Sudan and on the European continent; uncommon in USA and Britain.

b) Metric Fine Threads M

- thread for bolts and nuts;

- measured in metric system in mm;

- specification (example):

M 10 × 0.75 (= major Ø in mm × pitch in mm), or MF 10 × 0.75

Note that some diameters can possibly have different pitches, e.g. there are three different fine threads with Ø 10:

M 10 × 0.75
M 10 × 1
M 10 × 1.25

- both internal and external threads;
- mostly right hand threads; left hand threads are uncommon;
- always parallel thread;
- fine thread;
- sharp edged profile with 60°: 
- common in Sudan and on the European continent; uncommon in USA and Britain.

c) Unified Coarse Threads UNC

- thread for bolts and nuts;
- measured in inches;
- specification (example):

UNC No. 12 7/32 × 24, or

UNC $\frac{1}{2}$ × 13 (= thread Ø in inch × thread per inch [TPI])

- both internal and external threads;
- mostly right hand threads; left hand threads uncommon;
- always parallel thread;
- coarse thread;
- sharp edged profile with 60°: 
- common in USA and Britain; less common in Sudan; uncommon on the European continent.

d) Unified Fine Threads UNF

- thread for bolts and nuts;
- measured in inches;
- specification (example):

UNF No. 12 7/32 × 28, or

UNF $\frac{1}{2}$ × 20 (= thread Ø in inch × thread per inch [TPI])

- both internal and external threads;
- mostly right hand threads; left hand threads uncommon;
- always parallel thread;
- fine thread;
- sharp edged profile with 60°: 
- common in USA and Britain; less common in Sudan; uncommon on the European continent.

e) Whitworth Coarse Threads W

- thread for bolts and nuts;
- measured in inches;
- specification (example):

W $\frac{1}{2}$ × 12 (= thread Ø in inch × thread per inch [TPI])

Note that the diameters are the same as for UNC, but the TPI can differ sometimes;

- both internal and external threads;
- mostly right hand threads; left hand threads uncommon;
- always parallel thread;
- coarse thread;
- round edged profile with 55°: 
therefore very strong;
- up to very large diameters (4”);
- common in Britain; uncommon in other places.

3. Thread Standards for Pipes

The purpose of a pipe thread is to join two pieces of pipe in such a way that the transported fluid or gas does not leak. Watertightness or airtightness are more important than strength.

Pipe threads are both internal (in the socket) and external (on the pipe). They are mostly right hand, left hand only in exceptional cases.

Pipe threads can be both parallel and taper. Tapered pipe threads are much more common because of their water tightness and they are required for water and gas installations. When buying thread cutting tools, you have to indicate if you want parallel or taper pipe threading tools.

Pipe threads are mostly coarse, fine pipe threads are very rare. Pipe threads can have sharp edged and round edged profiles.

The following pipe threads are most common (for sizes see thread tables):

a) Whitworth Parallel Pipe Threads BSP

- thread for pipes;
- measured in inch;
- specification (example):

BSP R $1\frac{1}{4}$ × 11, parallel (= nominal Ø in inch × thread per inch [TPI]), or

BSP R $1\frac{1}{4}$, parallel, or

R $1\frac{1}{4}$, parallel, or

R $1\frac{1}{4}$, DIN 259 z (= German specification)

BSP stands for British Standard Pipe. The figure given is the nominal diameter in inch; it is neither the internal nor the external diameter of the pipe. The number of threads per inch (TPI) needs not to be indicated, because for each nominal diameter only one TPI is possible.

- both internal and external threads;
- mostly right hand threads, left hand threads only in exceptional cases;
- coarse thread;
- round edged profile with 55°: 
- common in Sudan and Europe, but less common than tapered pipe threads.

b) Whitworth Taper Pipe Threads BSP

- thread for pipes;
- measured in inch;
- specification (example):

BSP R $1\frac{1}{4}$ × 11, taper (= nominal Ø in inch × thread per inch [TPI]), or

BSP R $1\frac{1}{4}$, taper, or

R $1\frac{1}{4}$, taper, or

R $1\frac{1}{4}$, DIN 2999 k 1:16 (= German specification)

see also 8.32/9;

- both internal and external threads;
- mostly right hand threads; left hand threads only in exceptional cases;
- coarse thread;

- round edged profile with 55°: 
- very common for pipe threads in Sudan and Europe?

c) (American) National Parallel Pipe Threads NPSF

- thread for pipes;
- measured in inch;
- specification (example):

NPSF $1\frac{1}{4}$, or

NPSF $1\frac{1}{4} \times 11.5$ (= nominal Ø in inch × threads per inch [TPI])

see also 8.32/9; the TPI of the NPSF pipe thread is different from the TPI of a BSP pipe of the same diameter;

- both internal and external threads;
- mostly right hand threads; left hand threads only in exceptional cases;
- parallel thread;
- coarse thread;

- sharp edged profile with 60°: 
- common in USA.

d) (American) National Taper Pipe Threads NPT

- thread for pipes;
- measured in inch;
- specification (example):

NPT $1\frac{1}{4}$, or

NPT $1\frac{1}{4} \times 11.5$ (= nominal Ø in inch × thread per inch [TPI])

see also 8.32/9 and 10;

- both internal and external threads;
- mostly right hand threads; left hand threads only in exceptional cases;
- taper thread;
- coarse thread;

- sharp edged profile with 60°: 
- common in USA.

4. <u>Pipe Measurements</u>

Pipes are indicated by the diameter in inch. Note that this diameter is a <u>nominal</u> diameter and is neither the inside nor the outside diameter, e.g.

pipe Ø $1\frac{1}{4}$ " = 31.75 mm
outside Ø = 41.91 mm
inside Ø = 34 mm

The diameter can be abbreviated as

Ø 3" = nominal diameter
Ø 3" OD = outside diameter = external diameter
Ø 3" ID = inside diameter = internal diameter

Measure the outside and inside diameter of a pipe with a caliper (see 6.3/2).

Measure the thread type with a thread gauge (see 6.3/38).

B) Basic Operations of Plumbing

Some basic operations of plumbing are described in the following:

1. Cutting with a Hacksaw

When cutting a metal piece with a hacksaw, follow these steps:

- Fix the part to be cut in a vice.

- Select the right type of hacksaw blade according to the size of the part to be cut (see 6.3/28).

- Never change the blade in the middle of one cut. (A worn out blade cuts a narrower slot than a new blade. The new blade would be quickly spoilt in the narrow slot.) Take a new blade if the old one is not good enough for a full cut.

- Tighten the blade in the hacksaw frame.

- Mark where to cut.

- Hold the hacksaw straight.

- Use the full length of the blade in even movements.

- Press downwards when pushing the hacksaw forward. Do not press when pulling the saw back. The blade must be fixed to the frame accordingly. See also 6.3/26f.

Correct Use of Hacksaw

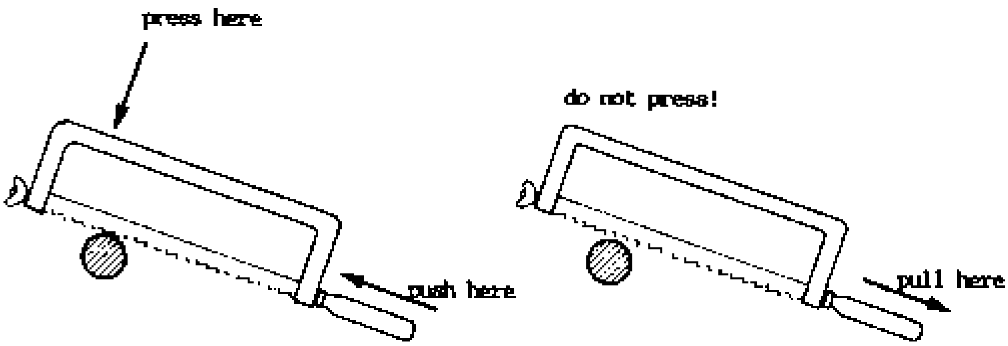

2. Pipe Cutting

It is very difficult to cut a pipe straight with a hacksaw. Instead, use a pipe cutter. Follow these steps:

- Fix the pipe in a pipe vice.
- Mark where to cut.
- Push the pipe cutter (see 6.3/36) onto the pipe.
- Tighten it until the cutting wheel touches the pipe.
- Oil the cut.
- Turn the pipe cutter one or two turns until slightly loose.
- Tighten the cutting wheel again.
- Cut another turn.
- Continue like this with constant oiling for cooling until the pipe is cut.
- Clean the chips away with a flat file.

3. <u>Thread Cutting</u>

Thread-cutting oil is needed for threading. There are two types of oil for thread cutting. Use the thread-cutting oil for drinking water (without any poison) for water supply systems and pump installation. Use the other type for all other threads.

Internal threads are normally cut in workshops and factories. For ordinary water supply work, external threads have to be cut. When cutting external threads, follow these steps, both for bolts and pipes(see also 6.3/36-41).

- Cut the bolt or pipe straight, i.e. orthogonally to its axis. Cut a pipe with a pipe cutter.

- File the end conically(= with a tapered end):

- Fix the bolt or pipe firmly in a vice.

- Take the die with the correct size and fix it in the die stock. The tapered end of the die has to start the threading (both for bolts and pipes).

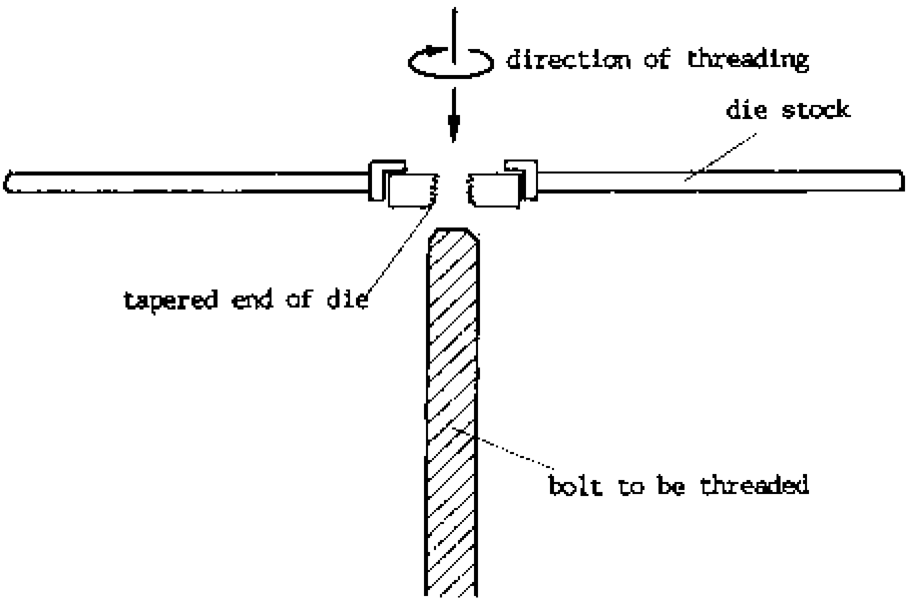

- Start cutting the thread(clockwise for right hand thread). Hold the handle vertical to the bolt/pipe. Oil continuously with thread-cutting oil.

- Turn one full turn (or until turning becomes difficult). Turn a quarter turn backwards to remove the chips. Turn another full turn forward and so on.

- Never use force.

- Continuously oil.

- When the thread is long enough, remove the chips, and turn the die loosely backwards until it is off the thread. When using a thread cutter with chaser die, open the dies and you can remove the tool without screwing back.

- Clean the thread and the die.

- The thread is of good quality if you can screw the nut or the socket easily onto the thread.

4. Using Pipe Wrenches (see also 6.3/34)

Pipe wrenches are used to tie or untie pipe connections. Use them like this:

- Take the pipe between the two jaws of the pipe wrench. The two jaws must be parallel, as well as the handles.

- Tighten the positioning screw.

WRONG:

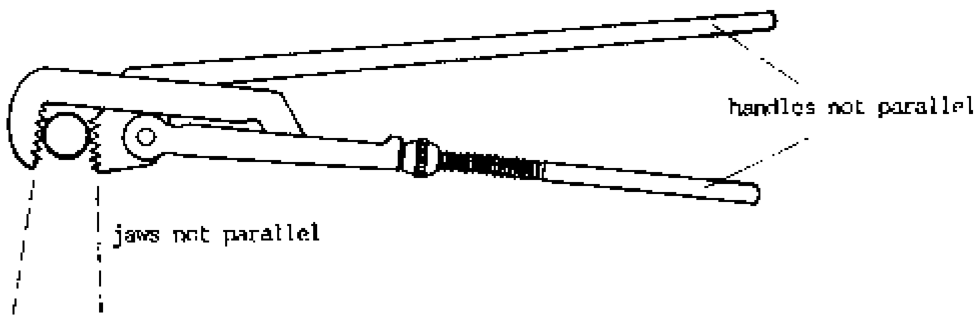

WRONG:

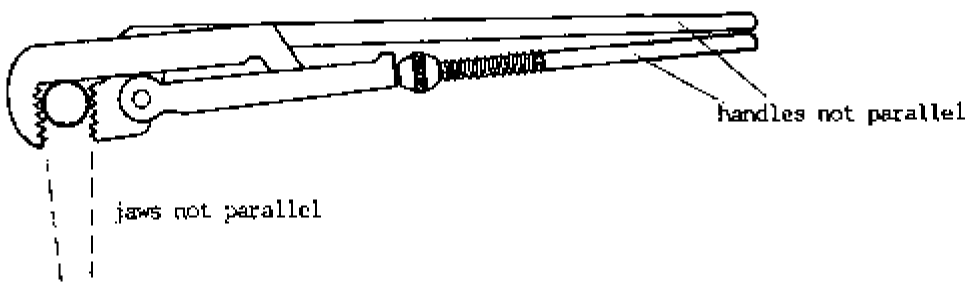

CORRECT:

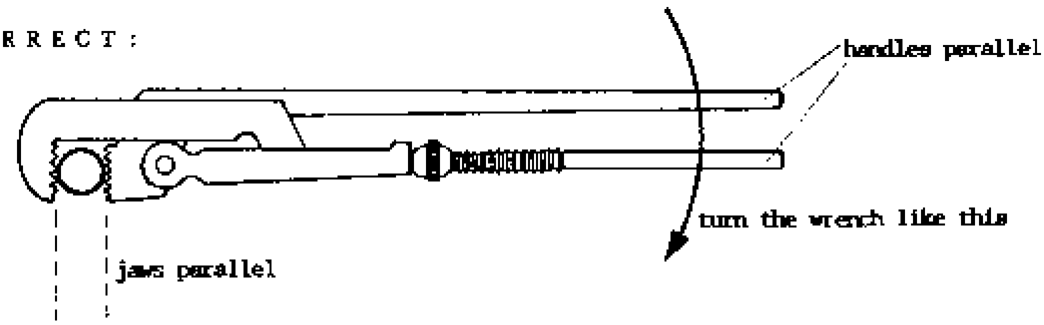

- Grip the two handles properly. If you have correctly adjusted the wrench, the two handles will be near enough to be easily pressed together, but not too near.

- Screw the pipe by turning the wrench as indicated in the drawing. For tightening a pipe and socket, the two wrenches must be held in the opposite way:

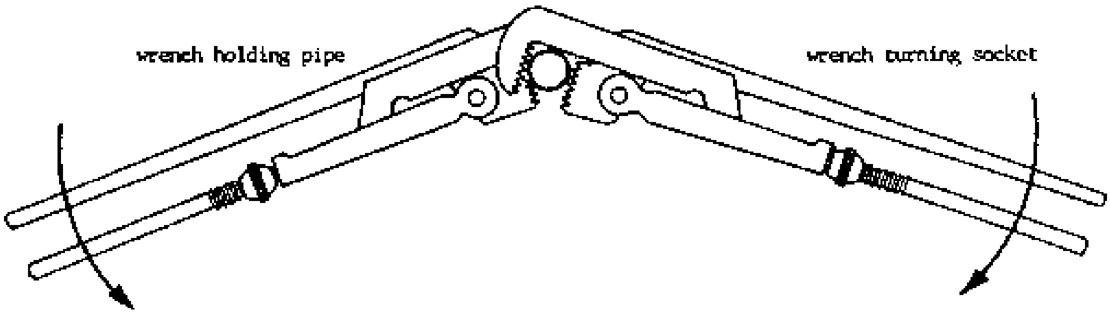

- When installing several pipes and sockets after each other, use always the same wrench for the socket and the other for the pipe. Thus, you will not have to re-adjust the wrenches every time.

- Never turn the serrated (= toothed) jaws of the wrench on the pipe, because this damages the teeth of the jaws as well as the pipe. The pipe will start to corrode at those spots. Good plumbing work leaves hardly any marks on the pipe.

C) Pipe Joints

Pipes can be joined together by different methods. The joining pieces are called fittings. Different types of pipe joints and other fittings are compiled here.

1. Male and Female Pipe Threads
Pipes with male and female threads can be joined directly.

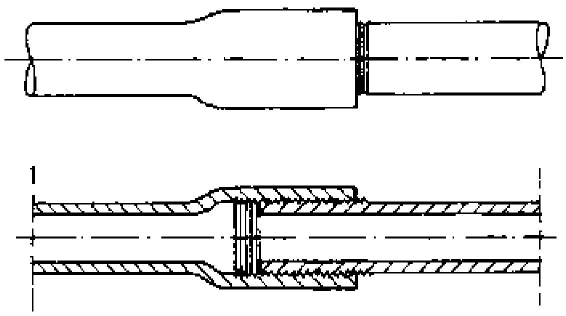

2. Socket (= Coupling)
for joining tapered pipe threads. You must be able to turn one of the pipes for connecting.

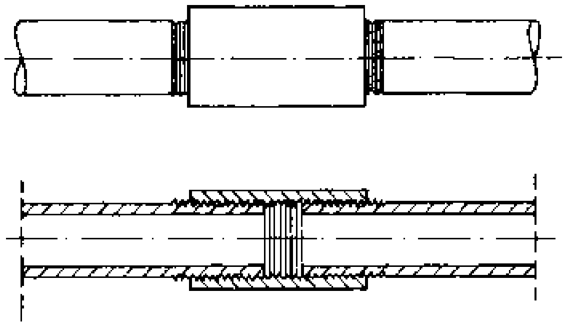

3. Socket with Backnut
for pipes with parallel threads. The backnut ensures water tightness.

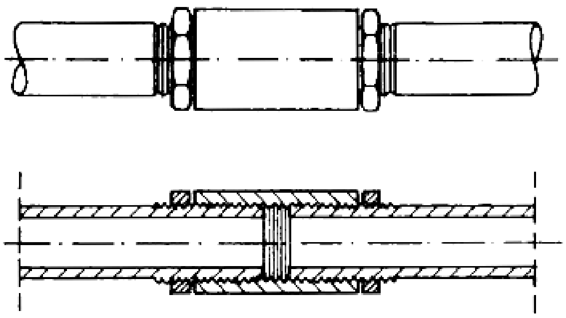

4. Nipple
for joining two pipes with internal threads.

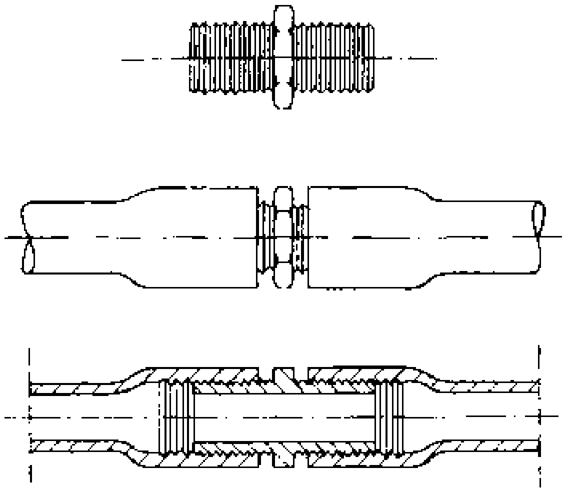

5. Reducer
for joining two pipes with different diameter and internal threads.

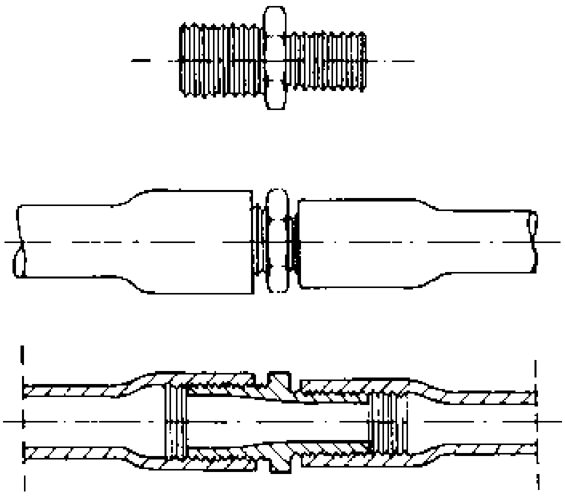

6. Reducer Socket
for joining two pieces with different diameter and external threads.

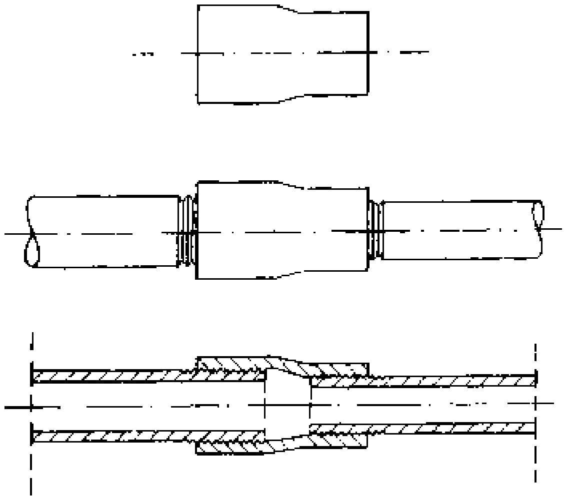

7. Tee-Joint (= Tee-Piece)
for branching pipes.

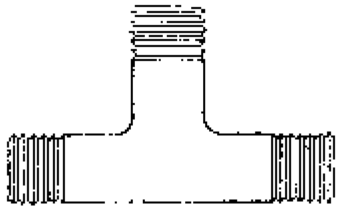

8. Elbow for corners.

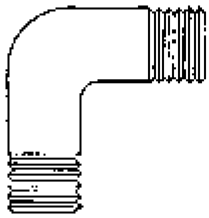

9. M & F - Elbow
male-female elbow, for corners.

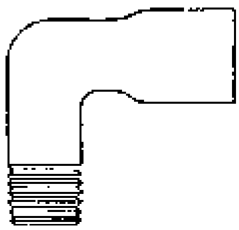

10. <u>Pipe Cap</u>
for closing a dead-end pipe with external thread.

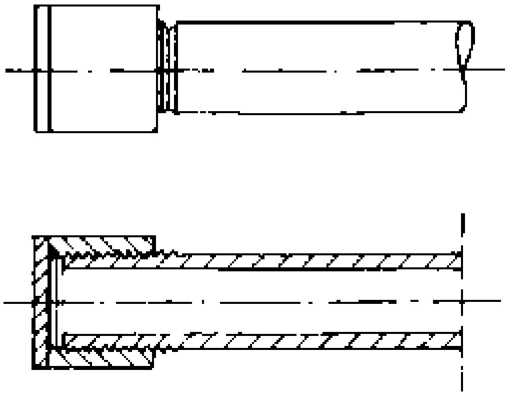

11. <u>Plug</u>
for closing a dead-end pipe with internal thread.

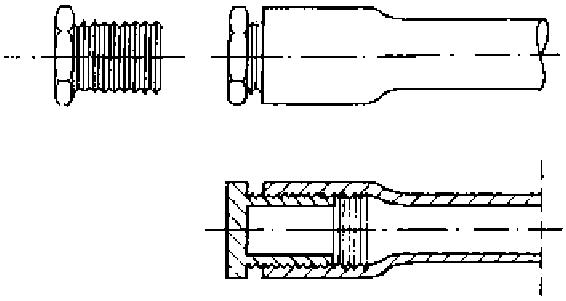

12. <u>Union Joint</u>
for connecting already installed pipes which cannot be turned.

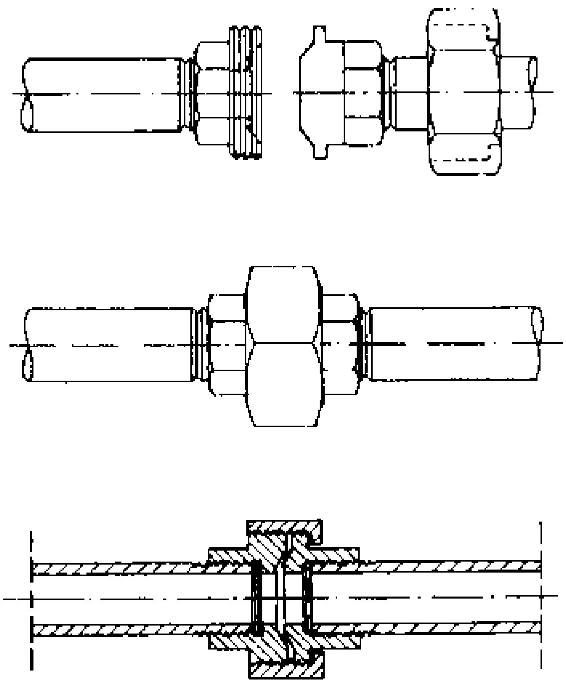

13. Flange Joint
for large diameter pipes (Ø 3” and more).

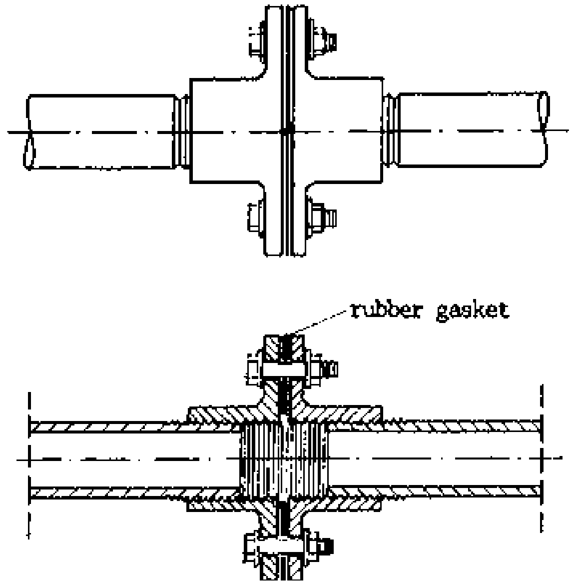

14. Welded Joint
for permanent Installations.

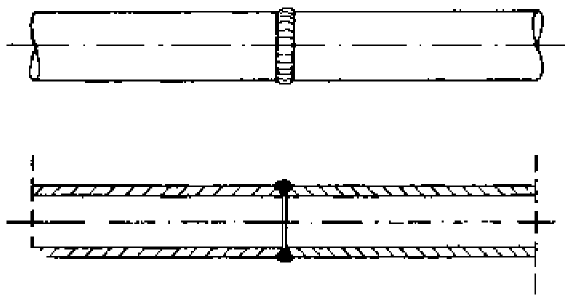

15. Hose Connection
for connecting a hose to a pump or a tap with thread.

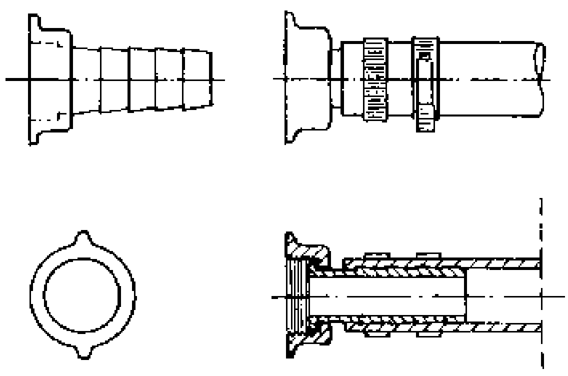

16. Dog Clutch
for quick connection of two pipes or hoses with dog clutches by a quarter turn, e.g. for fire brigade.

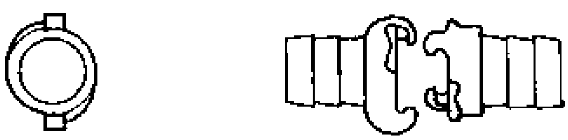

8.33. Hand Pump Caretaking

The crucial question in operating a water point is: Whom does the water point belong to? The caretaker? The Community? The contractor? The ownership will determine whom the water point will serve and who will be favoured.

A hand pump caretaker is essential for the functioning of a hand pump. She/he has technical and social duties and functions.

A) Daily Technical Duties

No.	Duty	Reasons
1	Sweep the platform and the surroundings. Keep the drainage free.	A water point needs to be clean in order to provide clean water.
2	Open and lock the pump according to opening hours.	The pump shall be used according to the regulations set up by the community.
3	Pump some water and check if operation and discharge are normal.	Any break-down is easier to repair if discovered immediately.
4	Report break-down of the pump immediately and lock the pump.	

B) Weekly Technical Duties

No.	Duty	Reasons
1	Grease the chain.	A greased chain lasts longer and makes operation easier.
2	Tighten all bolts.	Loose bolts cause unnecessary movement and lead to breakage.
3	Check if the platform has any cracks and repair it with cement mortar.	Cracks allow dirty water to enter the well.

C) Social Duties

No	Duty	Reasons
1	Be in time and keep to opening hours.	To be hand pump caretaker means to serve the community. People will appreciate and respect you if the] see that you are reliable, honest and just.
2	Behave politely.	
3	Make sure that the queue is kept correctly, and nobody favourised.	
4	Do not allow people to pump if they do not join the queue.	
5	Collect the money for the water.	
6	Do not give water to anybody free of charge or for less than the community decided.	
7	Deliver the money collected correctly.	
8	Teach the users to operate the pump correctly.	
9	Prevent the users from dirtying the platform and surroundings.	
10	Be honest and just.	

If the above duties are fulfilled, the hand pump will serve the community members equally and justly. This is only possible if the community controls the hand pump and the caretaker by a functioning committee. In this case, the income can be used for maintenance and other community projects (e.g. building new wells or latrines), beside a reasonable "salary" for the caretaker.

At present, few caretakers in Juba act according to these principles. The reason is first, that somebody who has not paid for the well claims ownership over the hand pump(or is given it as a contractor by the government) and, thus, makes profit out of the users and even abuses them. Secondly, the users act individually and do not organise themselves as a community and accept the present situation without readiness for commitment and change.

See also questionnaire about water sources and hand pump use, 4.23/5-9.

8.34. Calculation of Pump Discharge

It is important to know the yield of every pump

- for observation (any decrease of the yield means technical problems in the pump and requires maintenance).
- for estimating the required time to pump a well empty;
- for comparing different types of pumps.

There are special devices to measure the waterflow in a pipe and, thus, the yield of a pump, but these are mostly not available. Therefore, we have to measure the yield of a pump by other, simple methods.

A) Units of Pump Discharge

The discharge or yield of a pump can be expressed in different units:

$\frac{\ell}{sec}$ =	ℓ/sec	= ℓps	= litre per second
$\frac{\ell}{min}$ =	ℓ/min	= ℓpm	= litre per minute
$\frac{\ell}{h}$ =	ℓ/h	= ℓph	= litre per hour
$\frac{m^3}{h}$ =	m^3/h	= m^3ph	= cubic metre per hour
$\frac{m^3}{min}$ =	m^3/min	= m^3pmin	= cubic metre per minute

The different units are connected as follows:

1 ℓ/sec = 60 ℓ/min = 3,600 ℓ/h = 3.6 m^3/h = 0.06 m^3/min
1 ℓ/min = 60 ℓ/h = 0.06 m^3/h = 0.001 m^3/min

Use this transformation table to change one unit to another:

		to these:				
		ℓ /sec	ℓ /min	ℓ /h	m^3/h	m^3/min
If you want to change these units	t/sec		x 60	× 3,600	× 3.6	÷ 16.7
	ℓ /min	÷ 60		× 60	÷ 16.7	÷ 1,000
	ℓ /h	÷ 3,600	÷ 60		÷ 1,000	÷ 60,000
	m^3/h	÷ 3.6	÷ 16.7	× 1,000		÷ 60
	m^3/min	÷ 16.7	÷ 1,000	× 60,000	× 60	

How to use a transformation table is explained on 5.3/1.

B) First Method to Measure the Yield of a Pump

No.	Step	Example
1.	Record the time you start pumping and measure the water table.	t_{start} = 9.31, WT_{start} = 12.05 m
2.	Record the time you stop pumping and measure the water table.	t_{end} = 9.45, WT_{end} = 12.65 m
3.	Measure the diameter of the well at the water table.	Ø = 1.20 m
4.	Calculate the time needed for pumping $t = t_{end} - t_{start}$ For how to calculate a period of time see 5.8/3.	t = 45 min - 31 min = 14 min
5.	Calculate the volume of water pumped from the well (see 5.6/2): d = diameter r = radius h = drawdown = $WT_{end} - Wt_{start}$ $V = \frac{1}{4} \times \pi \times d^2 \times h = V \times r^2 \times h$ $\pi = 3.14$	d = 1.20 m h = 12.65 m - 12.05 m = 0.60 m $V = \frac{1}{4} \times 3.14 \times 1.20^2\ m^2 \times 0.60\ m = 0.678\ m^3$
6.	Calculate the yield: $\text{yield} = \frac{\text{volume}}{\text{time}};\ Q = \frac{V}{t}$	$Q = \frac{0.678\ m^3}{14\ min} = 0.0484\ m^3/min$
7.	Transform the result into m^3/h.	$Q = 0.0484 \times 60\ m^3/h = 2.90\ m^3/h$

If the diameter when starting pumping is not the same as the diameter when ending pumping, take the average diameter for an approximate calculation:

$$d = \frac{1}{2}(d_{start} + d_{end})$$

C) Second Method to Measure the Yield of a Pump

No.	Step	Example
1.	Record the time and start to pour the water discharged by the pump into an empty barrel.	t_{start} = 8.06, 0 sec
2.	Record the exact time in seconds when the barrel is full.	t_{end} = 8.07, 25 sec
3.	Calculate the time needed for filling the barrel (see 5.8/3): $t = t_{end} - t_{start}$	t = 1 min + 25 sec = 60 sec + 25 sec = 85 sec
4.	Determine, measure or calculate the volume of the barrel(see 5.6)	V = 200 ℓ
5.	Calculate the yield: $\text{yield} = \frac{\text{volume}}{\text{time}}$; $Q = \frac{V}{t}$	$Q = \frac{200\,\ell}{85\,\text{sec}} = 2.35\,\ell/\text{sec}$
6.	Transform the result into l/min with the transformation table.	Q = 2.35 × 60 ℓ/min = 141 ℓ/min
7.	Transform the result into m^3/h.	Q = 2.35 × 3.6 m^3/h = 8.46 m^3/h

D) Yields of Some Pumps for Comparison

Average yields of some pumps are roughly estimated here and expressed in different units for comparison. It is advisable to memorize pump yields only in one chosen unit, e.g. m^3/h.

No.	Pump	Average Yield (Approximately)			
		ℓ/sec	ℓ/min	ℓ/h	m^3/h
1.	India Mark II hand pump	0.22	13.3	800	0.8
2.	submersible pump HOMA 725 DHD	0.83	50	3,000	3
3.	diaphragm pump, handoperated	2.22	133	8,000	8
4.	petrol suction pump Honda WA 30X	8.33	500	30,000	30

8.35. Spring Protection

This chapter compiles the most basic information about spring protection. For more details see in the bibliography No. 44, 45, 46.

A) Purpose of Spring Protection

A spring is a place where water is naturally issued from the ground by continuous flow. A spring protection is being artificially constructed to serve the following purposes:

1. It shall protect the spring from contamination.
2. It shall improve the accessibility of the spring for the users.
3. It shall increase the water flow, if possible.

B) Different Spring Types

Springs can be differentiated according to the shape of the opening the water flows from. We differentiate seepage springs, where the water comes out of many tiny openings, and springs with a single opening like a fracture or a round hole.

However, springs are mainly differentiated according to the type of aquifer (open or confined aquifer) and the form of the surface. So, we differentiate the following types:

OVERVIEW ABOUT SPRING TYPES

No	Spring Type	Construction	Type of Water Outlet
	Gravity Springs		
1	Gravity Depression Spring	- preferably as well	- for seepage spring or single opening
2	Gravity Overflow Spring	- without springbox, or - with springbox with open side, or - with seepage trench and spring box, or - as combination spring-well, or - as horizontal well	- for single opening - for single opening - for seepage spring - for seepage spring or single opening - for single opening
	Artesian Springs		
3	Artesian Depression Spring	- with springbox with open bottom	- for single opening
4	Artesian Overflow Spring	- with springbox with open sides, or - with seepage trench and springbox	- for single opening - for seepage spring

The different spring types are briefly introduced in the following:

1. Gravity Depression Springs

Gravity depression springs occur where groundwater emerges at the surface because an impervious (= impermeable) layer prevents it from seeping downwards. A gravity depression spring emerges in a sunk area (= depression). It usually has a very small yield and is difficult to seal against contamination. Its presence shows the level of the water table. Water can be extracted safely if a well is constructed nearby on a higher ground.

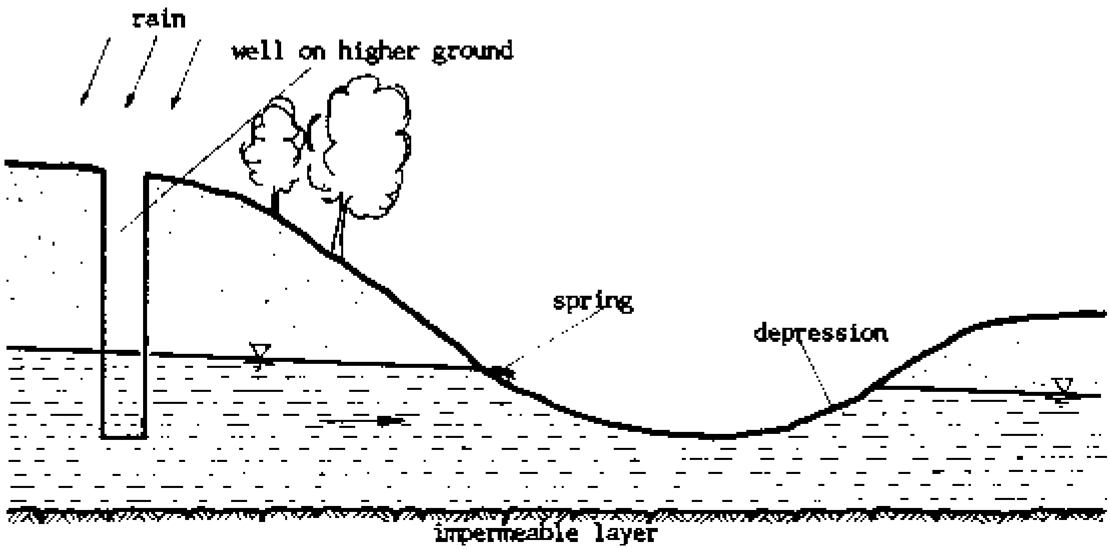

2. Gravity Overflow Springs

The gravity overflow spring usually occurs on slopy ground as a hillside spring. Its flow changes with variations of the water table during the different seasons.

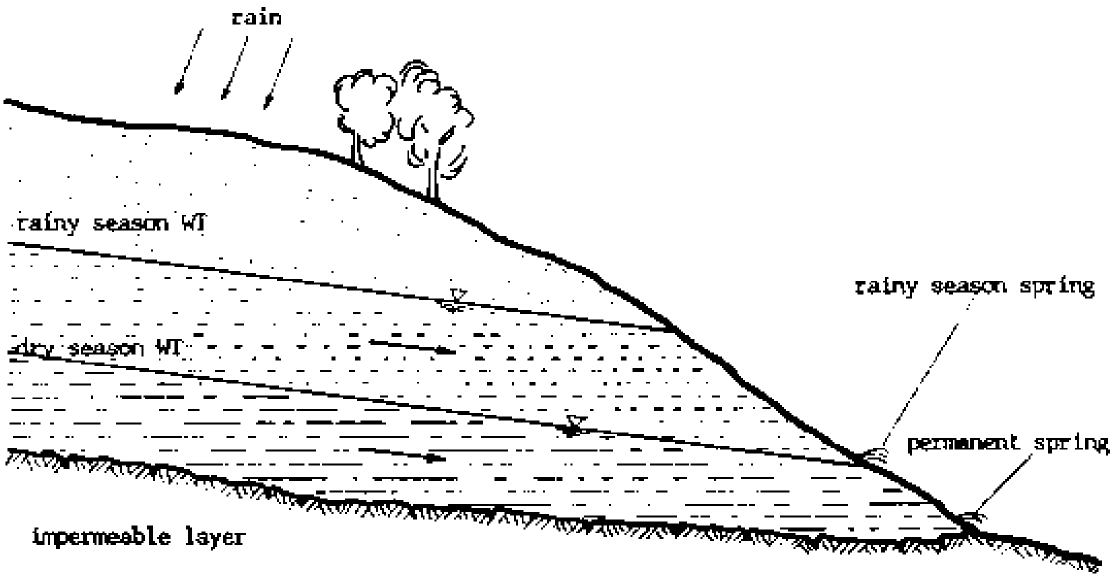

3. Artesian Depression Springs

Artesian depression springs occur where groundwater emerges at the surface after being confined (= shut up, kept) between two impermeable layers. The water emerges due to the internal pressure within the confined aquifer. The yield is usually very consistent and higher than of a gravity depression spring. An artesian depression spring emerges in a sunk area. A spring box with an open bottom is required for protection. See also 8.8/2.

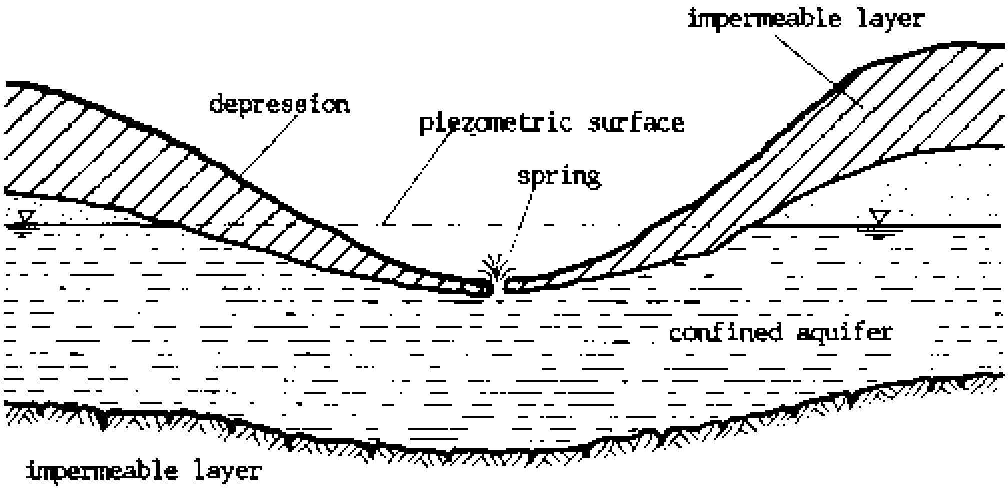

4. Artesian Overflow Springs

At an artesian overflow spring, the confined aquifer emerges at a hillside through a fracture in rock or an opening in the impermeable layer. The water flow is usually very constant. They are a very good source for community water supply, because they are protected from contamination by the overlying impermeable layer. If the spring flows through a single opening, a spring box with open side is suitable. If the water flows out through several openings, seepage trenches become necessary. See also 8.8/2.

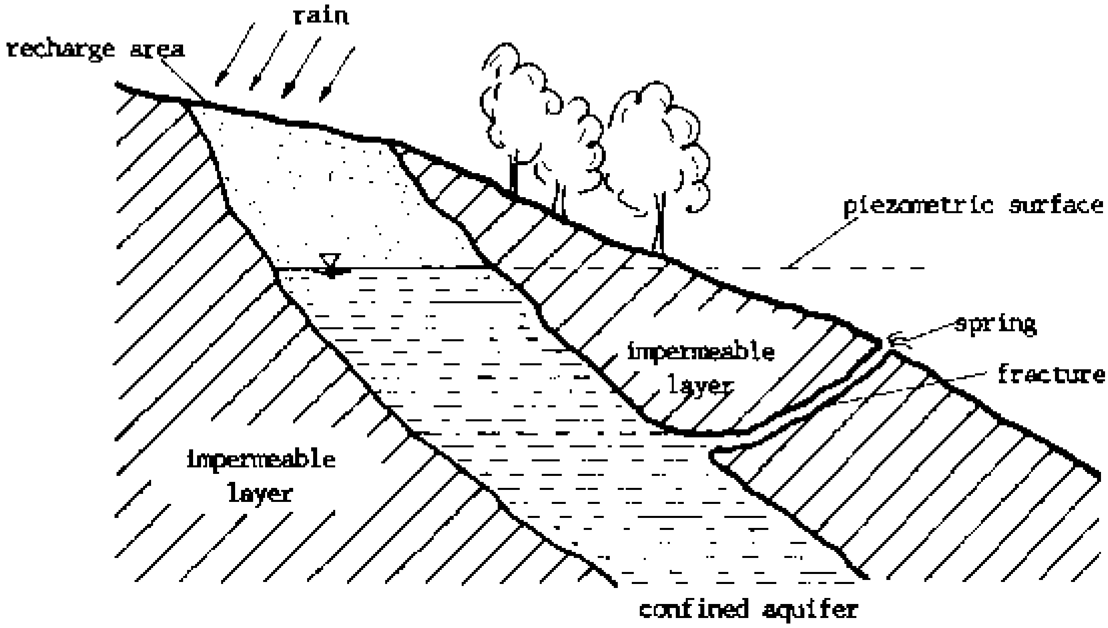

C) Different Spring Protection Designs

The different types of designs how to protect a spring are described in the following. Some designs are suitable for different types of springs.

1. Spring without Springbox

A spring without a springbox, but protected, consists of an impervious retaining wall with an outlet backfilled with stones and covered with puddled clay. It is suitable for gravity overflow wells with a single opening.

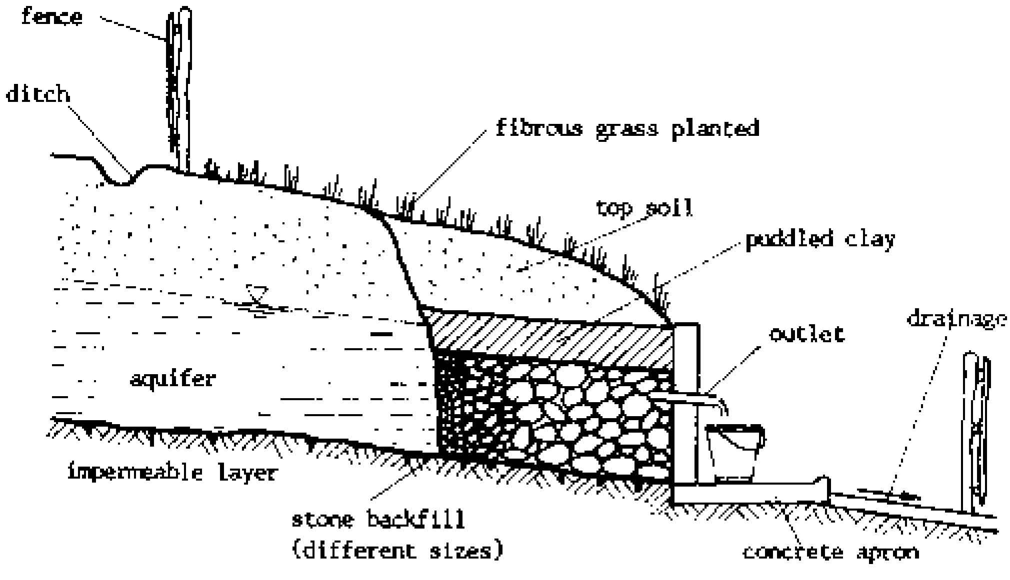

2. Spring with Springbox with Open Side

A springbox (= chamber = intake box = collection box) serves for collecting and storing the water. It can be built from concrete (with one side open), from masonry (with one side built without mortar), or from a concrete ring (with one side open or as filter). It has a removable, watertight, and lockable concrete lid. It is suitable for gravity overflow springs or for artesian overflow springs.

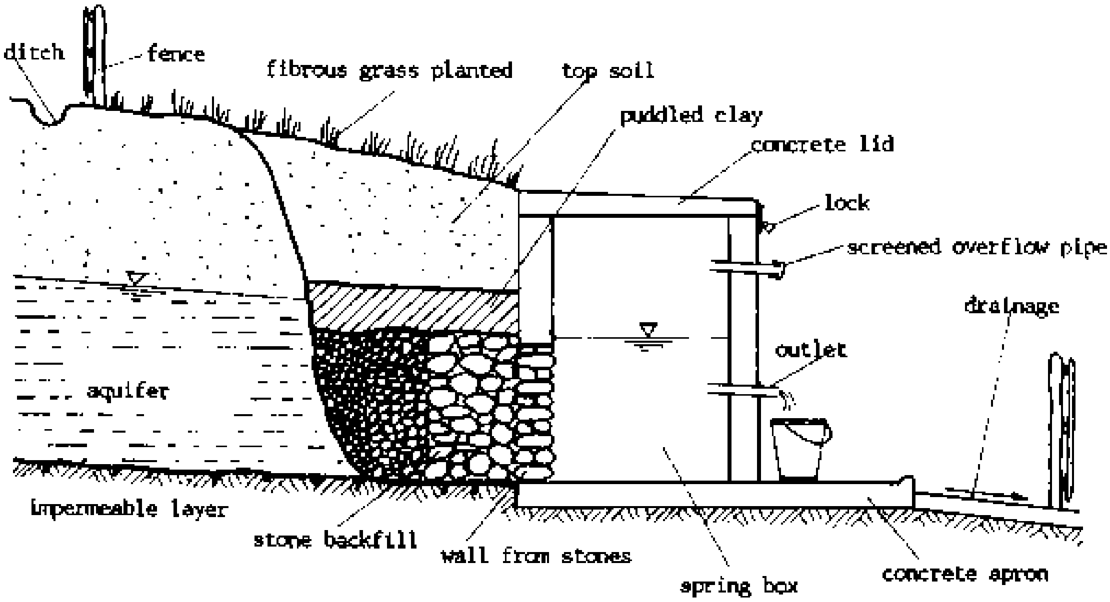

3. Spring Box with Open Bottom

If a spring flows from a single opening on more or less level ground, a springbox with an open bottom is suitable. This is the case for artesian depression springs. The box can be built on site from concrete or bricks, or a concrete ring can be used.

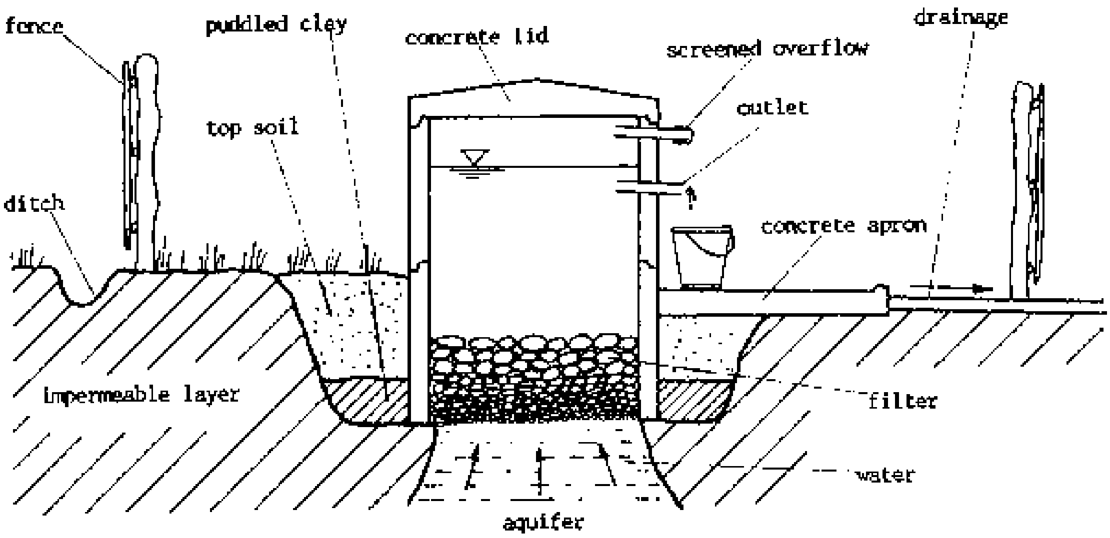

4. Spring with Infiltration Trenches and Springbox

If a gravity or artesian overflow spring occurs for a distance along the hillside, the water must be collected with infiltration trenches. They are dug deep into the hillside to contact the aquifer even in dry season. Slotted plastic pipes or short clay pipes surrounded with rocks and gravel collect the water and pipe it to the spring box. The pipes must have a slope. The openings on the pipes must be big enough to allow water to enter, but small enough to keep out sediments and to prevent blockage. Vertical clean-out pipes connected with elbows to the end of the collectors extend a little above ground and are capped. They can be used to clean the system by flushing it.

It is important to collect all water and to prevent the spring from flowing around or under the construction and wash it out. The anti-seepage wall (= cut-off wall) prevents loss of water due to underflow. It must reach into the impervious layer. Alternatively, it can be made from compacted clay which acts as a dam.

Spring with Infiltration Trenches and Springbox

LAYOUT PLAN

LAYOUT PLAN

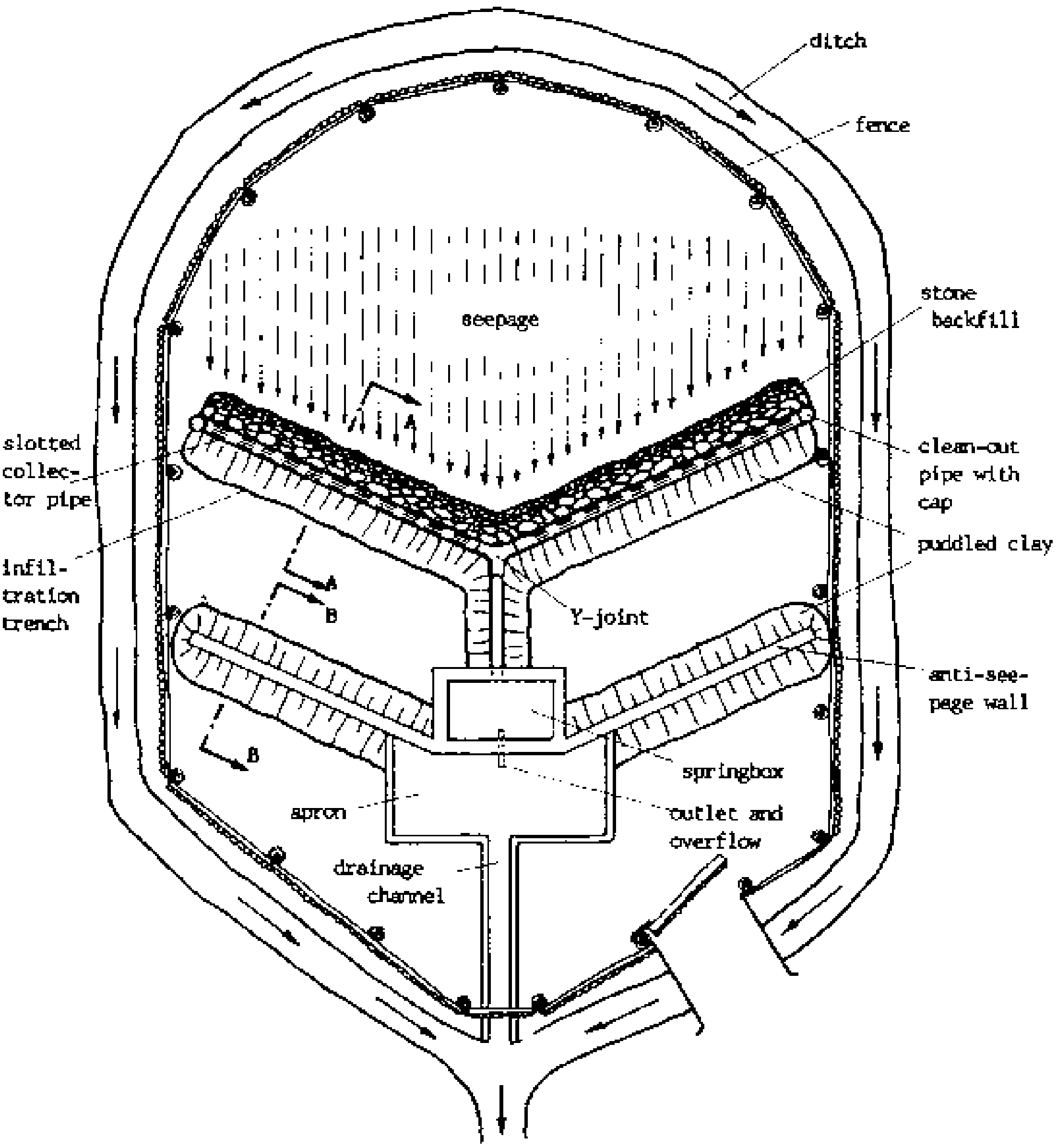

CROSS-SECTION A-A: INFILTRATION TRENCH

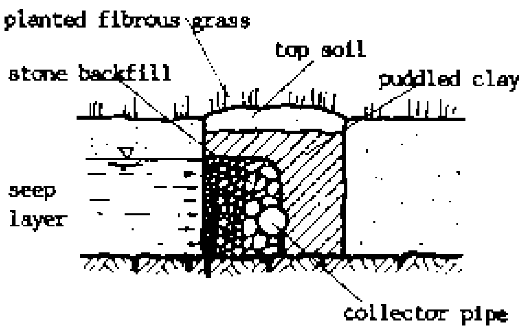

CROSS-SECTION B-B: ANTI-SEEPAGE WALL

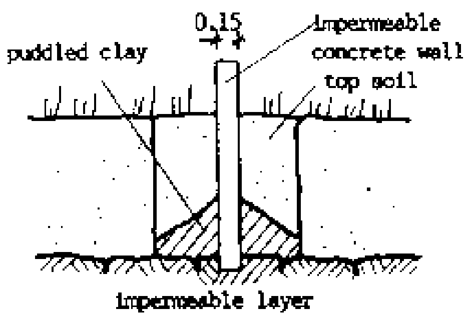

5. Horizontal Well

A horizontal well is suitable for a gravity overflow spring if the aquifer has a steep slope following the ground surface. A pipe with an open end or a perforated drive-point is driven into the aquifer horizontally and sealed all around.

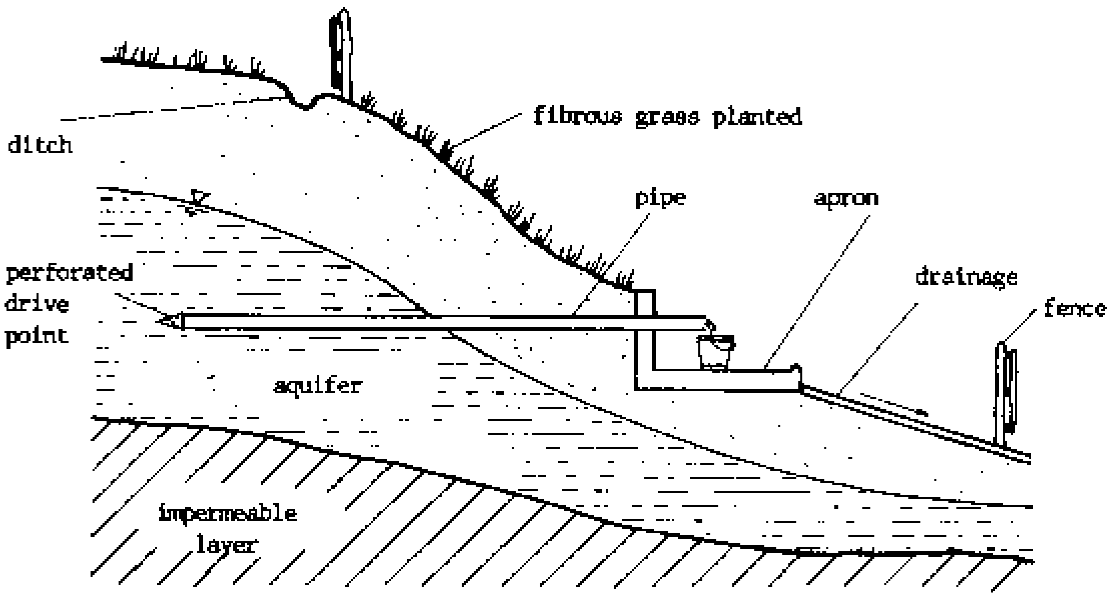

6. Combination Spring-Well

If a gravity overflow spring may dry up during dry season, then a well with a rainy season overflow (= water collection point) should be built. This is called a combination spring-well.

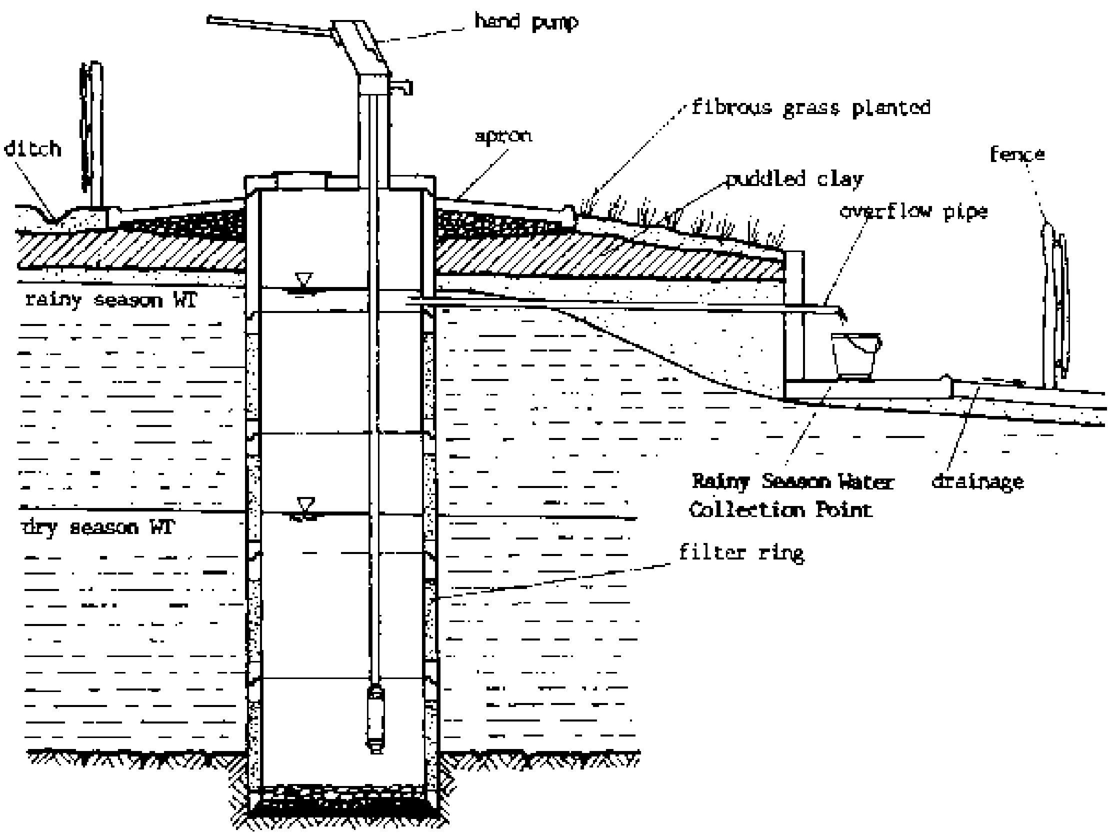

D) Essential Elements of a Spring Protection

A well protected spring has the following indispensable elements:

1. Springbox

It must be durable, impermeable on three sides, and permeable towards the spring.

2. Cover

The cover, preferably from reinforced concrete, must be heavy, lockable, and have a slope to drain the rainwater.

3. Overflow Pipe

The overflow pipe is installed at the highest water level to prevent building up of pressure inside the springbox. It must be screened with a non-corroding screen from copper or plastic to keep animals out. It can serve as air-vent at the same time.

4. Distribution Pipe (= Discharge Pipe = Outlet = Spout)

The distribution pipe supplies the water to the users. It can also lead to a separate storage tank downhill. If the yield of a spring is low, the distribution pipe can be equipped with a tap to allow water to collect inside the springbox.

5. Sealing with Puddled Clay

Different parts of the spring protection system have to be sealed with puddled clay. Puddled clay is clay which is worked while wet into a compact mass that becomes impervious to water when dry. It is the same type of “mudding” which is used to build a tukul. Puddled clay has to be smeared in 5 cm thick layers, to be compacted with the feet, and to be well compacted. An impervious layer must be at least 30 cm thick, i.e. it must be smeared in six layers.

6. Protective Planting

The area around the spring must be planted with a strong type of grass (fibrous grass) to prevent erosion (= the surroundings from being washed out).

7. Fencing

The spring must be fenced to prevent animals. Preferably, a hedge should be planted for easier maintenance and cheaper costs.

8. Surface Drainage Ditch (= Diversion Ditch)

A surface drainage ditch must be constructed around the spring to divert all rainwater. It should be about 8 to 10 m away from the spring-box. It should be lined with gravel or stones to increase flow and to prevent erosion of the sides.

9. Area Cleanliness

The area around the spring in a radius of 50 to 100 m must be free from latrines and other sources of pollution.

E) Planning a Spring Protection

For planning a spring protection, consider these steps:

1. Consult the local people where the springs are in the area. Ask which ones stop flowing during dry season.

2. Investigate around the area and check to see if the spring is not in reality a stream which has gone underground and is reemerging.

3. The springbox should not be built on swampy ground.

4. The springbox should not be threatened by flood or erosion.

5. Check if the water looks clear.

6. Check the flow of the spring. Measure it with buckets (l/min).

7. Check if there are possible sources of contamination nearby.

8. Identify what kind of spring you have (see B) and what type of design to use (see C).

9. Check if the water rights in the area allow the construction of a spring protection.

10. Get or draw a map of the area, including the spring site(s), the nearest houses, latrines, etc., the distances, the elevations, and important land marks.

F) <u>Constructing a Spring Protection</u>

The construction of the different designs for spring protection shall not be discussed here in detail. However, some basic principles shall be listed here, valid for all designs:

1. Set the distribution pipe level first before the construction begins. Drive a large wooden peg into the ground outside the area to be excavated. Never disturb this reference peg.

2. While excavating, take care not to disturb the ground formations. Without care, the flow of the spring might be deflected into another direction. Careful digging around the eye of the spring might increase the flow.

3. The foundation of all parts of the spring protection must reach into the impermeable layer.

4. Dig a temporary drainage channel while building the springbox to be able to work in a relatively dry area.

G) <u>Maintenance of a Spring Protection</u>

A spring protection needs a small amount of maintenance in order to prevent water contamination, ensure long life and give optimum service to the users. How water distribution and maintenance are organised is up to the community (see also social duties of a hand pump caretaker 8.33). In the following we list only the technical steps of maintaining spring structures, which should be done regularly, at least once a year.

1. Check if water from the surface is likely to enter the spring and contaminate it.

Surface water is likely to enter the spring - if the water temperature is higher during the day than at night; - if the yield increases after a rain; - if the turbidity increases after a rain.

2. Check if any water is seeping beside or underneath the spring structure. If water seeps out, seal the leak with clay or concrete.

3. Check the surface drainage ditch. Clean it, remove any obstacles and improve it, if necessary.

4. Check the fence and repair it, if necessary.

5. Check if the springbox and anti-seepage walls are solid or are washed out by erosion. If there are signs of erosion, fill the holes with earth and gravel, plant grass and improve the drainage ditches.

6. Clean the springbox from sediments.

7. If there are infiltration trenches, flush them with water through the clean-out pipes.

8. Check if the cover of the springbox is watertight.

9. Check the screening of the pipes and replace it, if necessary.

10. Disinfect the spring once a year (see 8.36).

11. Take periodically samples from the spring and let them be examined in a water laboratory, if possible.

8.36. Well Disinfection

Hand dug wells are contaminated by workers and equipment during construction.(Urinating and defaecating in the well during construction are strictly forbidden). Boreholes are contaminated by equipment and casings. Hand pumps are contaminated by pipes, rods and tools. Therefore, after completion of a well and after each hand pump maintenance a well needs to be disinfected in order to provide safe and uncontaminated water to the consumers.

There are different methods to clean the water of a well:

A) Chlorination

Chlorination is a way of chemical disinfection and is the most commonly used form of disinfection. Basic information about this method is compiled here.

1. Dosage

Different dosages are used. They are indicated in mg/ℓ or ppm. 1 mg/ℓ is the same as $1\frac{mg}{\ell}$ and stands for 1 milligram per litre. 1 mg/ℓ means that there is 1 mg chlorine (the chemical chlorine available for disinfection) in 1 ℓ water. 1 ppm stands for 1 part per million and means 1 mg chlorine per 1 million mg water, as 1 ℓ water = 1 kg = 1,000 g = 1,000,000 mg (see also 5.3/5).

Dosage	Description
30 ppm	strong chlorination for disinfecting wells after construction or maintenance. Not drinkable.
5 ppm	moderate chlorination for disinfecting wells under use or water in the household. Not drinkable.
3 ppm	dosages above 3 ppm can cause diarrhea.
0.3 - 1.0 ppm	residual chlorine in drinking water. Drinkable.

Chlorine is available in different forms, as powder or as liquid.

Bleaching powder has 25-35% available chlorine, that means that only 25-35% of the powder is chlorine and is available for disinfecting the water.

Old bleaching powder has become weak and has lost most of its initial chlorine. Therefore, we assume only 5% available chlorine in it.

High strength calcium hypochlorite has 70% available chlorine; it is more expensive than bleaching powder and more difficult to get.

Liquid bleach is a chlorine solution, e.g. 5%. sodium hypochlorite. 5% solution means that 5% of the solution is the chemical, the rest is water. 1 ℓ of a 5% solution contains (as 1 ℓ = 1000 g)

5% of 1,000 g = 50 g chlorine = 50,000 mg chlorine.

Thus a 5% solution is the same as 50,000 mg/ℓ or 50,000 ppm.

2. Handling Chlorine

Once a container with chlorine is opened, it fairly rapidly looses its initial chlorine content, especially, if exposed to air, moisture, heat and light. Also, chlorine is very corrosive.

Therefore:

Store chlorine in dry, close, dark, non-rusting containers in a cool place, like - plastic jerrycan, painted black; - nylon bag put into a closed tin; - dark bottle well closed.

During chlorination take into account that the disinfectant may have lost strength and, in this case, add more.

It is essential to add sufficient chlorine to satisfy the chlorine demand of the water and to have a little spare chlorine left which is called "free active chlorine" or "residual chlorine".

The water should be clear (that is without turbidity) before chlorination. Otherwise a higher dose is needed.

Treat chlorine powder and solution carefully. Do not touch the disinfectant. Never drink a chlorine solution. It is extremely dangerous because it eats up the stomach inwardly. Mind your eyes; if chlorine has touched your eye, rinse it with water immediately for 10 minutes.

3. Steps of Chlorination

For chlorinating a well after construction, follow these steps:

a) Calculate the volume of the water in the well (see also 5.6/2):

$$V = \pi \times r^2 \times h$$

Volume (m^3) = inside diameter (m) × $\frac{1}{2}$ inside diameter (m) × 3.14 × depth of the water from the bottom to the water table (m)

Example:

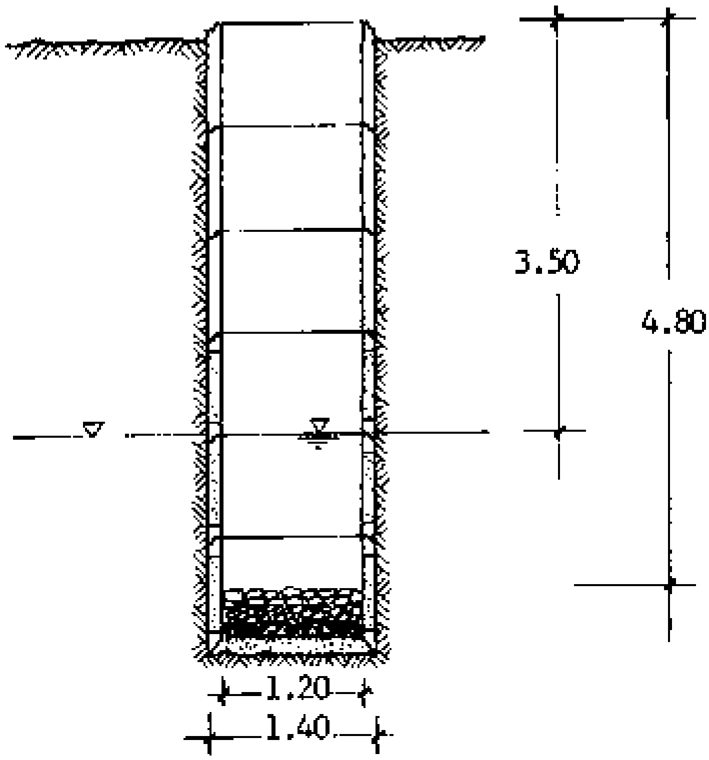

SCALE 1:80

h = 4.80 - 3.50 = 1.30 m
r = 1.20 ÷ 2 = 0.60
π = 3.14

V = 0.60 m × 0.60 m × 3.14 × 1.30 m = 1.47 m^3

b) Check what kind of disinfectant you have and its percentage of available chlorine.

c) From table 1 (see 8.36/4) find the amount of chlorine that will have to be added to the volume of water to produce a strong chlorine solution (30 ppm).

d) Dissolve the required amount of the chemical in a bucket of water before adding it to the well. This solution must have a strong chlorine odour (= smell); otherwise, it has less available chlorine content than you assumed and you must add more.

e) Pour the solution into the well. It is best to agitate the water to ensure that the chlorine is evenly mixed. Pump the hand pump a bit until the pipes are filled with chlorine solution.

f) The strong chlorine solution should be left in the well for at least 12 hours and preferably 24 hours; it must be stressed that this strong chlorine solution is <u>not suitable</u> for humans or animals.

g) After 12 to 24 hours contact time, the strongly chlorinated water should be pumped from the well until the residual chlorine level is below 1.0 mg per litre of water (with little chlorine taste). The pumping equipment to be installed on the well can be disinfected by using it to remove the excess chlorine. Choose a disposal place for the chlorine solution where it will have as little contact with plants and animal life as possible.

TABLE 1 FOR DISINFECTION OF WELLS AFTER CONSTRUCTION

The approximate dosage is 30 mg/ℓ (= 30 ppm). Do not drink this water after disinfection. Empty the well after 12 to 24 hours contact time until the residual chlorine is about 0.3 to 1.0 mg/ℓ (= 0.3 to 1.0 ppm) and the water has only slight chlorine odour and taste. Then you can drink it.

Water			Powders								Liquid		
			old (weak) bleaching powder 5%		bleaching powder 25-35%			high strength calcium-hypochlorite 70%.			liquid bleach 5%. sodium hypochlorite		
220 ℓ =	1	drum	132	g = $1\frac{3}{4}$ salsal	22 g =	$2\frac{1}{2}$	tablesp.	9 g =	1	tablespoon	132 ml =	$1\frac{3}{4}$	salsal
1000 ℓ =	1	m^3	600	g = 8 salsal	100 g =	$1\frac{1}{3}$	salsal	43 g =	5	tablespoons	600 ml =	= 8	salsal
	1.5	m^3	900	g = 12 salsal	150 g =	2	salsal	65 g =	7	tablespoons	900 ml =	= 12	salsal
	2	m^3	1.2	kg	200 g =	$2\frac{2}{3}$	salsal	86 g =	$1\frac{1}{4}$	salsal	1200 ml =	= 1.2	ℓ
	2.5	m^3	1.5	kg	250 g =	$3\frac{1}{3}$	salsal	110 g =	$1\frac{1}{2}$	salsal		1.5	ℓ
	3	m^3	1.8	kg	300 g =	4	salsal	130 g =	$1\frac{3}{4}$	salsal		1.8	ℓ
	3.5	m^3	2.1	kg	350 g=	$4\frac{2}{3}$	salsal	150 g =	2	salsal		2.1	ℓ
	4	m^3	2.4	kg	400 g =	$5\frac{1}{3}$	salsal	170 g =	$2\frac{1}{4}$	salsal		2.4	ℓ
	5	m^3	3.0	kg	500 g =	$6\frac{2}{3}$	salsal	215 g =	3	salsal		3.0	ℓ
	6	m^3	3.6	kg	600 g =	8	salsal	260 g =	$3\frac{1}{2}$	salsal		3.6	ℓ

Water			Powders								Liquid		
			old (weak) bleaching powder 5%		bleaching powder 25-35%			high strength calcium-hypochlorite 70%.			liquid bleach 5%. sodium hypochlorite		
	7	m^3	4.2	kg	700 g =	$9\frac{1}{3}$	salsal	300 g =	4	salsal		4.2	ℓ
	8	m^3	4.8	kg	800 g =	$10\frac{2}{3}$	salsal	340 g =	$4\frac{1}{2}$	salsal		4.8	ℓ
	9	m^3	5.4	kg	900 g =	12	salsal	385 g =	5	salsal		5.4	ℓ
	10	m^3	6.0	kg	1000 g =	1	kg	430 g =	$5\frac{3}{4}$	salsal		6.0	ℓ
	12	m^3	7.2	kg		1. 2	kg	520 g =	7	salsal		7.2	ℓ
	15	m^3	9.0	kg		1. 5	kg	650 g =	$8\frac{2}{3}$	salsal		9.0	ℓ
	20	m^3	12.0	kg		2	kg	860 g =	$11\frac{1}{2}$	salsal		12.0	ℓ
	30	m^3	18.0	kg		3	kg	1300 g =	1.3	kg		18.0	ℓ
	40	m^3	24.0	kg		4	kg		1.7	kg		24.0	ℓ
	50	m^3	30.0	kg		5	kg		2.2	kg		30.0	ℓ
	100	m^3	60.0	kg		10	kg		4.3	kg		60.0	ℓ

Comparative measurements see Table 2, 8.37/3;	ml = millilitre ℓ = litre } see 5.3/4 m^3 = cubic metre	g = gram kg = kilogram } see 5.3/5

4. Further Information

The amount of chlorine in the table was calculated as follows:

for powders:

$$\boxed{\text{amount of disinfectant (mg)} = \frac{\text{dosage (mg/}\ell = \text{ppm)} \times \text{quantity of water (}\ell\text{)}}{\text{percentage of available chlorine (\%)} \times \frac{1}{100}}}$$

Example:

1 m^3 water, 30 mg/ℓ (= 30 ppm), high strength calcium hypochlorite 70%;

$$\frac{30\ \text{mg}/\ell \times 1{,}000\ \ell}{70 \times \frac{1}{100}} \cong 43{,}000\ \text{mg} = 43\ \text{g}$$

for liquids:

$$\boxed{\text{amount of liquid (ml)} = \frac{\text{dosage (mg/}\ell = \text{ppm)} \times \text{quantity of water (}\ell\text{)}}{\text{percentage of solution} \times 10}}$$

Note that 1 ml of a 5% solution contains, as 1 ml = 1 g:

5% of 1 g = 5% of 1000 mg = 5 × -^ × 1000 mg = 5 × 10 mg (see also 8.36/2)

Example:

1 m^3 water, 30 mg/ℓ (= 30 ppm), liquid bleach 5%;

$$\frac{30\ \text{mg}/\ell \times 1{,}000\ell}{5 \times 10} = 600\ \text{ml}$$

B) Pumping

If no disinfectant is available, clean the well first thoroughly by hand and then pump the well as much as possible. This will reduce the contamination, but it is not a 100% safe method.

C) Treatment with Sand Filters

Locally made sand filters may be used to treat drinking water. They are simple and provide clean water, but need maintenance. For further details see the literature, especially No. 44 in the bibliography.

8.37. Water Treatment at Home

It is very important to have safe drinking water in the household. Different methods to treat the water at home in order to get safe drinking water are discussed here. Choose what is available and appropriate under the given circumstances.

A) Water from Safe Sources

To get water from a safe source is the best solution and, in this case, no treatment is needed. Hand dug wells with hand pumps and boreholes can be safe sources if the groundwater is not polluted and the platform has no cracks. Inquire if the water was tested in a laboratory and is safe.

However, if you cannot get your drinking water from a safe source, you can treat it with the following methods.

B) Sedimentation

If the water is of brownish colour and not clear (= turbid), it has a lot of suspended matter. This is called "turbidity". Before any further disinfecting, the suspended matter must be removed. Let the water stand over night until the suspended matter settles. Carefully pour off the clear water. This will reduce the contamination; therefore, you should do it even if you cannot treat the water further. But the water is not safe after sedimentation only.

C) Coagulation with Alum

Mix alum (= aluminium sulphate) with the water and let it settle. The particles of the alum will combine with the suspended matter and form small lumps. The lumps will settle. This process is called coagulation. Treating water with alum is a clarification process. The higher the turbidity, the more alum you need. It removes the turbidity and reduces the contamination, but does not provide safe drinking water.

D) Coagulation with Plants

The seeds of certain trees (e.g. moringa olifera) act like alum when powdered and can be used for coagulation. For further details see the literature.

E) Pouring Water through Cloth

Pouring water through a clean cloth can reduce the turbidity, but it does not remove the contamination; it is a pre-treatment method. Wash the cloth after each use.

F) Chlorination

Chlorination is a common and simple form of water treatment in the home. For detailed information about chlorine see 8.36.

For chlorinating drinking water in the home, follow these steps:

1. Clarify the water by one of the methods mentioned above before chlorination.

2. Determine the quantity of water you want to disinfect:

1 water jerryccan	= 20 ℓ	= 0.02 m^3
1 drum	= 220 ℓ	= 0.22 m^3

3. Check what kind of disinfectant you have (if possible, from the label of the package) and its percentage of available chlorine. Commonly available powders are mostly bleaching powder.

4. From TABLE 2 on the next page, find the amount of chlorine to be added to the water to produce a moderate chlorine solution.

5. Dissolve the disinfectant in a cup of water.

6. Pour the solution into the water and stir it well. This initial dose shall produce a 5 ppm solution; it must have chlorine smell. Otherwise the chlorine has lost its strength and you must repeat the dosage.

7. Let the water stand for at least 30 minutes. The chlorine reacts with the organic and inorganic matter present in the water. After 30 minutes, the chlorine concentration ought to be reduced to less than 1 ppm.

8. After 30 minutes (or more), check for the residual chlorine. The treated water should have a slight chlorine odour and taste. If not, repeat the dosage (Return to step 3). If the water has still no chlorine odour, the disinfectant is expired and useless. If the water has too strong a chlorine taste, allow it to stand for a few hours. Contact with the air removes the taste and smell of chlorine.

G) Treatment with Iodine

Iodine can be used for disinfecting water. The water must be clear; treatment with iodine is not suitable for water with a high turbidity.

1. Clarify the water with one of the above methods before treatment with iodine.

2. Pour 2 drops of iodine per litre into the water (e.g. 40 drops per jerrycan and 440 drops per drum). Double the dose if the water is highly polluted. Stir the water.

3. Let it stand for 30 minutes. Then you can drink.

TABLE 2 FOR DISINFECTION OF DRINKING WATER

The approximate dosage is 5 mg/ℓ (= 5 ppm). Do not drink the water immediately after disinfection. After 30 min contact time the residual chlorine should be about 0.3 to 1.0 mg/ℓ (= 0.3 to 1.0 ppm). The water should have a slight chlorine odour and taste. Then you can drink it.

Water			Powders									Liquid		
			old (weak) bleaching powder 5%			bleaching powder 25-35%			high strength calcium hypochlorite 70%			liquid bleach 5% sodium hypochlorite		
20 ℓ =	1	jerryc.	2 g =	1	teaspoon	0.3	g		0.1	g		2 ml =	1	teaspoon
220 ℓ =	1	drum	22 g =	$2\frac{1}{2}$	tablespoons	3	g = 1	teaspoon	1.6	g = $\frac{1}{2}$	teaspoon	22 ml =	$2\frac{1}{2}$	tablesp.
1000 ℓ =	1	m^3	100 g =	$1\frac{1}{3}$	salsal	14	g = $1\frac{1}{2}$	tablespoons	7	g = $2\frac{1}{2}$	teaspoons	100 ml =	$1\frac{1}{3}$	salsal
	1.2	m^3	120 g =	$1\frac{1}{2}$	salsal	17	g = 2	tablespoons	9	g = 1	tablespoon	120 ml =	$1\frac{1}{2}$	salsal
	1.5	m^3	150 g =	2	salsal	21	g = $2\frac{1}{3}$	tablespoons	11	g = $1\frac{1}{3}$	tablespoons	150 ml =	2	salsal
	2	m^3	200 g =	$2\frac{2}{3}$	salsal	29	g = $3\frac{1}{3}$	tablespoons	14	g = $1\frac{1}{2}$	tablespoons	200 ml =	$2\frac{2}{3}$	salsal
	2.5	m^3	250 g =	$3\frac{1}{3}$	salsal	36	g = 4	tablespoons	18	g = 2	tablespoons	250 ml =	$3\frac{1}{3}$	salsal
	3	m^3	300 g =	4	salsal	43	g = $4\frac{3}{4}$	tablespoons	21	g = $2\frac{1}{3}$	tablespoons	300 ml =	4	salsal
	4	m^3	400 g =	$5\frac{1}{3}$	salsal	57	g = $6\frac{1}{3}$	tablespoons	29	g = $3\frac{1}{3}$	tablespoons	400 ml =	$5\frac{1}{3}$	salsal
	5	m^3	500 g =	$6\frac{2}{3}$	salsal	71	g = 8	tablespoons	36	g = 4	tablespoons	500 ml =	$6\frac{2}{3}$	salsal
				$\frac{1}{2}$	kg		= 1	salsal		= $\frac{1}{2}$	salsal		$\frac{1}{2}$	ℓ

Comparative Measurements(approximately)

1 teaspoon, flat 1 tablespoon, flat 1 salsal tin = tin for tomato paste	= 3 g chlorine powder = 9 g chlorine powder = 75 g chlorine powder	= 8 tablespoons chlorine powder
1 teaspoon 1 tablespoon 1 salsal tin = tin for tomato paste	= 3 ml = 9 ml = 75 ml	= 8 tablespoons

ml = millilitre; ℓ = litre; m^3 = cubic metre (see 5.3/4); g = gram; kg = kilogram (see 5.3/5)

H) Boiling

Boiling destroys all forms of disease organisms in water. However, boiling requires a lot of firewood or other fuels and is very expensive.

Bring the water to a rolling boil; the water must be bubbling rapidly. Let it boil for 2-3 minutes.

Store the water in the same container in which it was boiled to prevent new contamination.

To boil a large quantity of water for many people, the boiler can be built from a drum (see drawing):

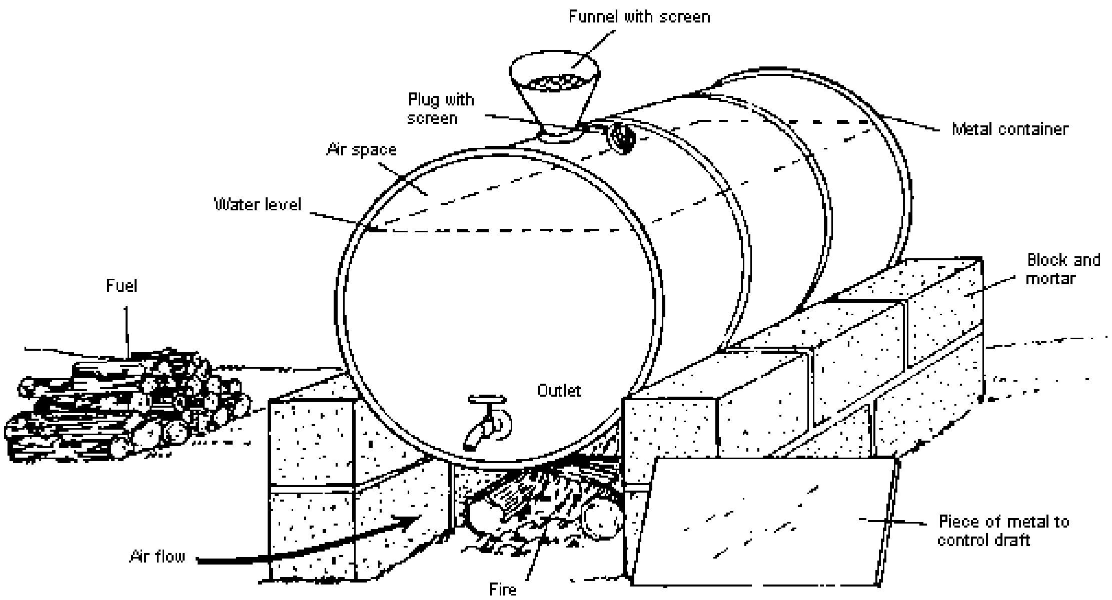

I) Filtering with Sand Filter

Household sand filters made from locally available materials can be used for cleaning the water.

Sand filters where the sand is not constantly covered by water clarify the water, but do not remove the bacteria. Sand filters where the sand is constantly covered by water remove most of the bacteria.

For details see No. 44 in the bibliography and other literature.

A household sand filter is shown on the drawings next page. See also 6.1/22.

Household Sand Filter

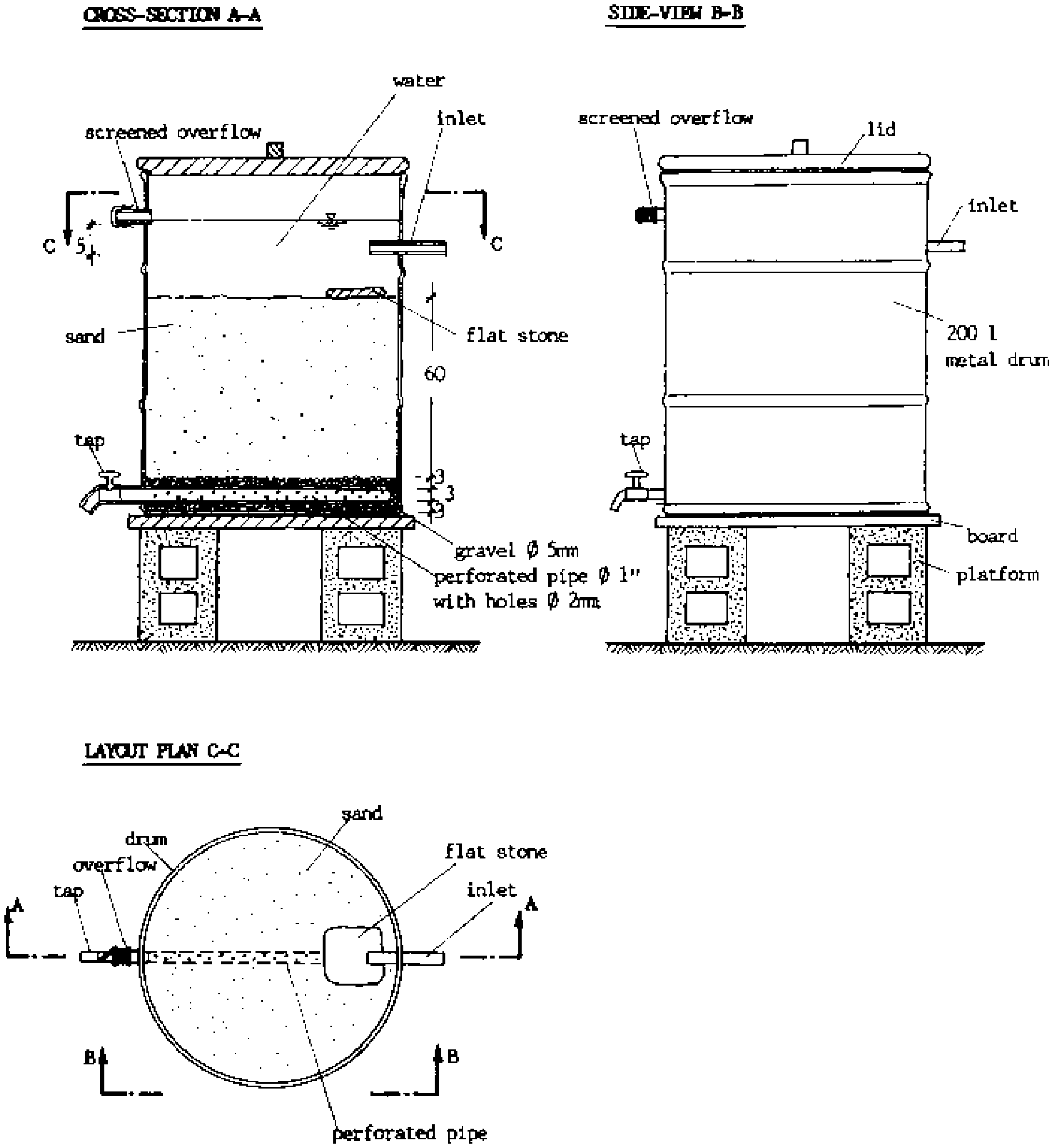

J) Filtering with Commercial Filters

Commercial filters with filter candles made from fired ceramics provide water free from bacteria, if maintained according to the instructions. They are relatively expensive and can filter only a limited amount of water per day.

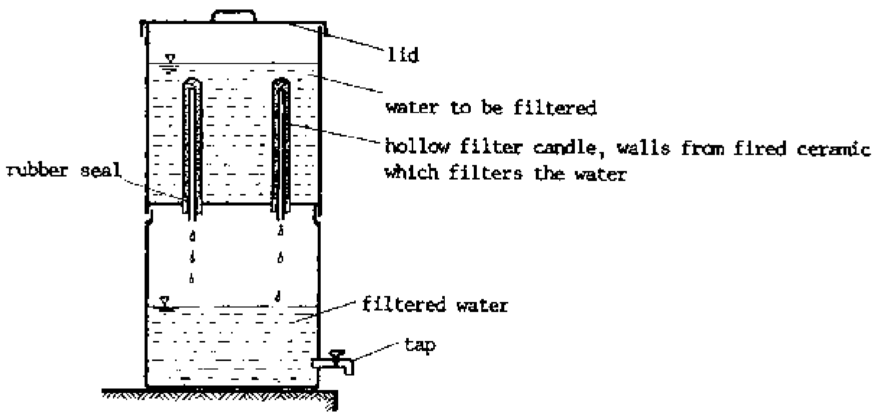

K) Storage

Five or six days water storage is enough to reduce the level of bacteria enough so that people can safely drink the water. If the water quality is poor, increase the length of storage.

Use two barrels with taps and covers. Fill both barrels and empty one completely before using water from the second. When use from the second barrel begins, refill the first barrel. Each time, clean the barrels carefully. Use the water from the barrels only for cooking and drinking.

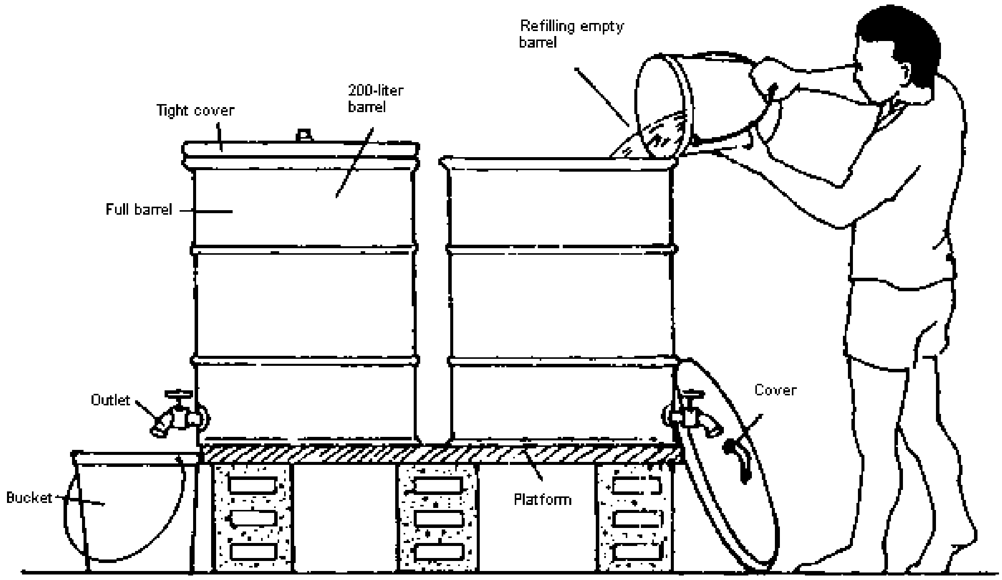

L) Heating

Expose jerrycans of water to the sun for one day. The water will be heated to 50-60°C. This will reduce organic contamination, but not remove it completely. See in the bibliography 46, July 1986.

M) Restriction of the Use of Safe Water

Restrict the use of the available safe water to basic needs like drinking, cooking, washing dishes, brushing the teeth. Use different water for bathing and washing the laundry.

ONE JERRYCAN = 20 LITRES

ONE SHORT-CALL = 20 LITRES

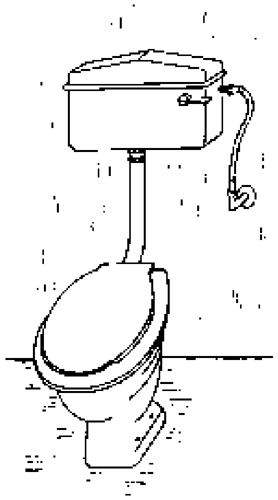

DO NOT WASTE DRINKING WATER!

See also 8.29/5 and 9.8/2.

8.38. Handling Water at Home

A) Possible Ways of Contamination of Water from a Clean Source

Even if water is taken from a clean source which is safe for human consumption, we may afterwards still experience diseases. The reasons may be that the water is contaminated

- during collection and delivery to the home,
- during storage and use in the home.

This can happen in the following ways:

1. During Collection and Delivery to the House

- The container for fetching the water can be contaminated, e.g.

    * if it is not kept clean or has holes,

    * if people use their hands or other dirty items as a funnel to direct the water into the container,

    * if people wash hands and face, etc., while filling the container at the same time,

    * if the container is used for fetching drinking water from the borehole and then the same container is used for water for other purposes from an unsafe source,

    * if the container is left open at home and flies, cockroaches and other animals have access to it.

- The container is left without cover when fetching: animals may drink; the hand of the one carrying may go into the water while lifting and carrying the container.

- The cover used is not clean, e.g. the lid of the jerrycan is put on the ground or leaves are used as cover for a bucket or claypot.

- The water is put from the pump into an open barrel and then taken to the house by jerrycan. The wind can blow dirt into the barrel and the jerrycan will dirty the water when dipped into it for filling after standing on the ground.

2. During Storage and Use in the House (see also 9.5/3)

- The container for storage is contaminated, e.g.

    * It is not cleaned regularly.

    * Members of the family do not wash their hands after going to the latrine. Their hands remain dirty. The person is thirsty and takes water from the pot with a cup, but is not careful and reaches with their hand into the water. The germs enter the water and infect others drinking later on.

    * The pot has no lid or the lid does not close properly or is not relaced after each use. Dust and dirt can enter the pot; flies, cockroaches and other animals can contaminate the water, especially, if it is placed directly on the ground.

- The cup used for taking water from the pot is contaminated, e.g.

* It is not washed regularly.

* People use the same cup for dipping and for drinking. Saliva of a sick person enters the water and brings germs to it. Others drinking later get infected.

* Many people use the same cup and infect the water and each other.

B) Possible Ways to Avoid Contamination

1. Generally

Never touch drinking water with your hands.

2. Container for Transport

- Clean your hands before fetching water.

- Clean the container before fetching water.

- Always use a closed container with a clean and fitting lid.

- Use separate containers for drinking water and other water. Do not use the container for drinking water for any other purpose. If you have only one container, wash it thoroughly with sand, soap and hot water and rinse it afterwards, each time before you fetch water for drinking.

3. Container for Storage

- Equip the pot with a tight lid and tap.

- Remove water from the pot only through the tap.

- If there is no tap, teach everybody in the home how to take water carefully not touching it with the hands, to pour water into another cup for drinking, and to replace the lid.

- Clean the pot regularly and do not keep water for more than 2 weeks.

- Put the pot on a stand to prevent algae and fungi growing into the pot, animals having access to it and small children touching the water.

- Insist that everybody in the home washes his/her hands with soap after going to the latrine.

4. Container for Drinking

- Clean the cups regularly.

- Ensure that everybody uses his/her own cup, if possible; at least ensure that somebody sick uses a separate cup for drinking.

- Never use the same container for dipping and drinking.

- If there is no tap, use a container with a long handle for dipping, stored inside the pot, below its cover.

C) How to Equip a Claypot with Tap and Lid

One possibility to prevent contamination of the water in the home is to equip the pot for storage with a tap and a lid. In the following, it is described how that can be done.

1. Instructions How to Fix a Tap

a) Materials and Tools Needed

Quant	Item	Drawing
1	claypot (can be an old one, but it should not have any cracks)	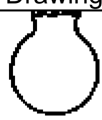
1	$\frac{1}{2}$" tap with joining piece (should be joined together in the shop to see whether it fits properly)	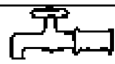
2	tablespoons of cement	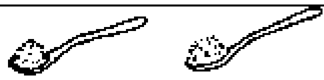
1	for drilling: reinforcement rod Ø 6 mm, 25 cm long (can be sharpened by cutting with a bolt cutter or with a stone)	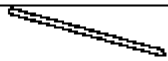
1	or 6" nail	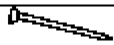
1	or hand-operated drilling machine with stone bits	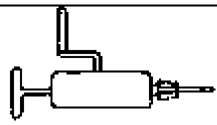
1	rasp (if available)	
1	big bowl for soaking the pot	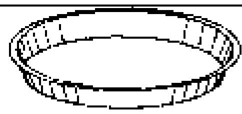
1 1	small bowl table spoon	 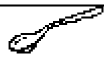
2	nylon bags	
	cloth or paper	
	sand and water (not salty)	

b) <u>Step-by-Step Procedures</u>

No	Step	Drawing
1	Mark the place you want to fix the tap on the pot. Soak the pot in water and also pour water into the pot. The location of the tap needs to be well soaked.	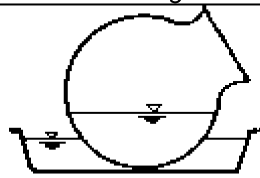
2	The tap should be connected with a joining piece of pipe. This should be done in the shop where you buy the tap. Hold the tap with the joining piece against the pot at its future location and draw a circle around it. The location should be not too low or too high on the pot.	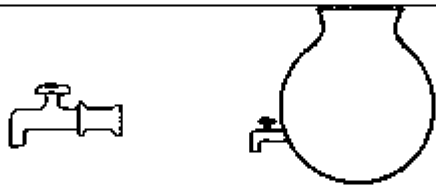
3	Make a big hole for the tap by making first several small ones. Scratch the pot carefully with the 6” nail or reinforcement in the way you stir food until you have made a hole, or drill with a hand-operated drilling machine with a bit for stone. Never use a hammer. Smoothen the edge of the hole with a rasp; it shall be just big enough to push the tap in.	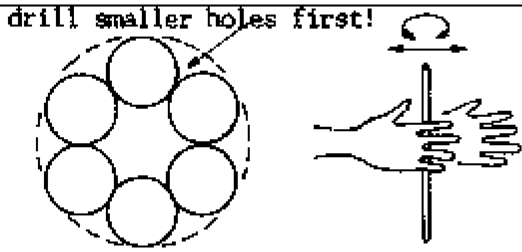
4	Close both sides of the tap with a piece of cloth or paper.	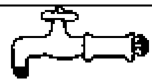
5	Choose a place where the pot can remain unmoved for 2-3 weeks. Put sand on the ground and position the pot in it so that the opening for the tap is on the top. The tap shall be in vertical direction.	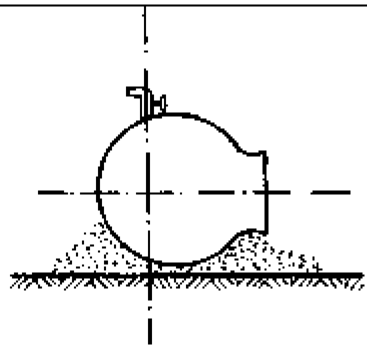
6	Mix in a small bowl 2 tablespoons of cement with <u>very, very little</u> water. The mixture must be very stiff, like asida (= ugali).	

No	Step	Drawing
7	Place the tap into the opening in such a way that it is horizontal in the final position. Make the place wet. Smear the cement mortar around the joining pipe from inside and outside. The mortar shall be as thick as a finger at the tap and smooth on the edge.	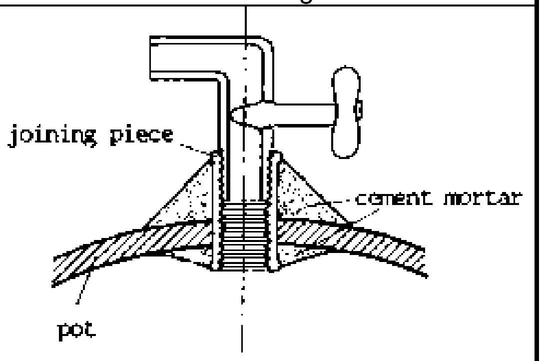
8	<u>Do not move the pot at all.</u>	
9	Wait until the mortar is a bit hard. Then cover it with wet sand and a nylon. Pour some water into the pot and close the mouth of the pot with a nylon bag.	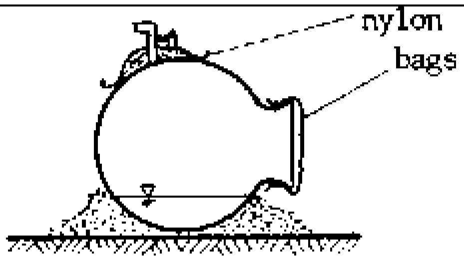
10	Keep the sand wet continuously for five days. This is most important.	
11	After one week, the pot can be carefully moved and the lid can be manufactured. After a second week or later, the pot can be used.	
12	Remove the cloth or paper from the tap and clean the pot carefully before use.	

2. <u>Instruction How to Make a Lid</u>

a) <u>Materials and Tools Needed</u>

Quant	Item	Drawing
1	claypot	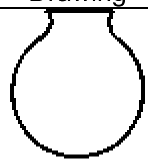
1	handle, bent into shape from reinforcement rod or any other scrap metal.	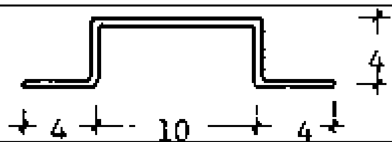
1	support piece, from hard carton, plywood, or an old plate	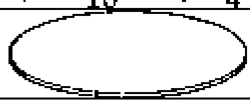
2	nylon bags	
2	cups of sand	

Quant	Item	Drawing
1	cup of cement water (should not be salty)	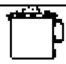
1	sieve (used for flour) or a piece of mosquito wire	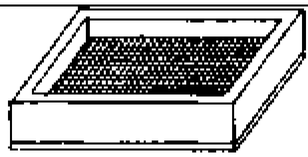
1 1	bowl tablespoon	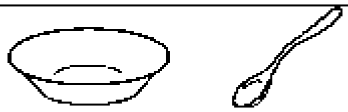
1	6" nail (for scratching a mark on the pot)	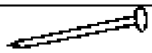

b) Step-by-Step Procedures

No	Step	Drawing
1	Scratch two marks into the edge of the pot.	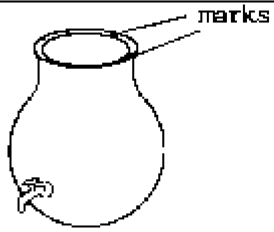
2	Position the pot vertically in sand and pour some water into the pot.	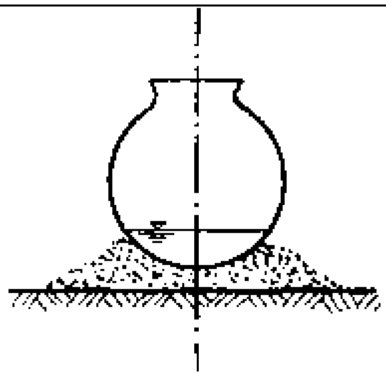
3	Cut a support for casting the lid from carton paper or plywood, or use any fitting plate. Place it into the mouth of the pot) it should not fall in, but leave an edge of the pot free.	
4	Bend a piece of reinforcement into the shape of the handle.	

No	Step	Drawing
5	Place a nylon bag on top of the supporting piece on the mouth of the pot, hanging over the edge of the pot.	
6	Sieve sand. Mix 2 cups of sand with 1 cup of cement and a little water. The mortar should be very stiff like asida.	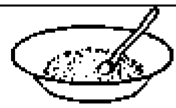
7 8	Smear the mortar on the nylon as thick as your smallest finger. Place the handle on top.	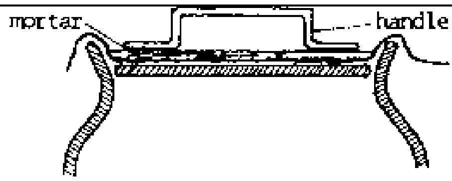
9	Finish the lid with mortar. When completed, it should be as thick as two fingers. Smear the mortar tight on the edges of the pot. The edge of the lid shall not be too thin. Smoothen the surface.	
10	Scratch two marks on the lid, matching the marks on the pot.	
11	Wait until the mortar is a bit hard. Then put sand, soaked in water, on top of the lid. Cover it tightly with a nylon bag and and tie the bag around the mouth of the pot.	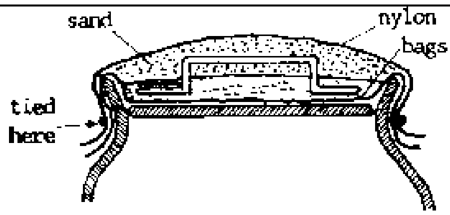
12	Do not remove sand and nylon bag for one week. Afterwards remove the sand, nylon bags and support Clean the lid and the pot thoroughly. The pot is now ready for use.	

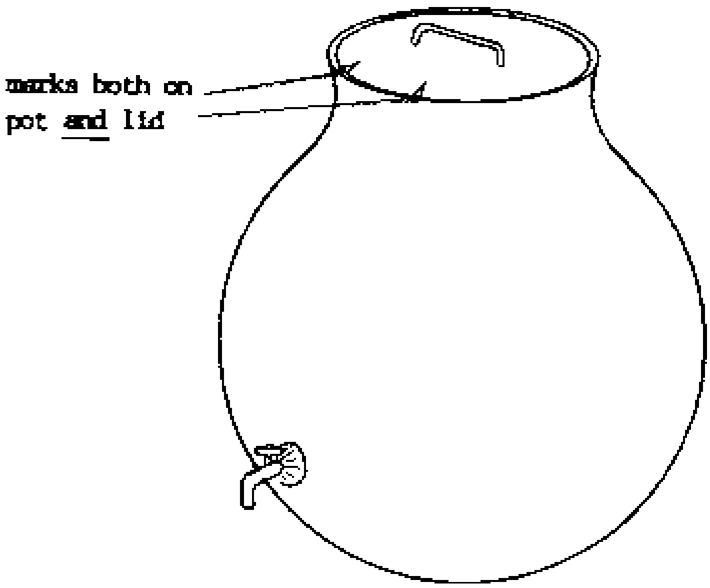

8.39. Health Education about Water/Operating Instruction for Wells

A) Health Education about Water

People need to be made aware about the facts concerning water and health in order to improve their situation and change wrong habits. Therefore, the aim of the health education about water in the project is

- to inform people about the importance of clean water and the connection with sanitation;

- to make people understand the importance of keeping the well properly and how to use it in a good way;

- to make people understand the importance of maintenance and continuous care for the well.

B) Connection of Water and Health

A change in the health situation can only happen if all people use good water and sanitation facilities and use them properly.

Water supply and sanitation are very closely connected; improvement can only happen if none of them is neglected. In this chapter, we deal with the water side, the sanitation side is mentioned in 9.5, 9.6, 9.21, 9.22.

Water must be sufficient, clean and safe in order to contribute to reducing disease, not only for drinking and cooking, but also for

- bathing, hand-washing and cleaning the teeth;
- cleaning vegetables, fruit and kitchen utensils;
- washing the laundry;
- watering animals(see also 8.5 and 8.6).

The problem is that one cannot see or easily know whether water is really clean and safe. Water which looks clean can still carry disease, and other water which may have a salty taste and not be liked by the people may be safe.

In order to have water which is really clean and safe, that means it contains nothing which can cause disease, we have to prevent contamination of water which we know is safe, that is normally groundwater. Contamination needs to be prevented

- at the water source,
- during collection and delivery } see 8.38
- during storage and use in the household } see 8.38

Water can be polluted at the source by	How to prevent/cure it
chemicals, like fuels, DDT, etc. washed into the ground by rain	- Do not use dangerous chemicals where water is used for human consumption. See 9.13/3; 9.16/2 - There is **<u>no cure</u>**.
poor sanitation facilities or wrongly constructed latrines or WCs and septic tanks, through germs and nitrates/nitrites	- Keep “safe” distances (at least 50m) between latrines and water source. See 4.15/6; 8.12/1; 9.8/3. - Never have a latrine reach into the groundwater. See 9.8/3. - Cure for germs: chlorination.(8.36) - **<u>No cure</u>** for nitrates/nitrites.
Dirty water around the well, see- ping into it (surplus water from the pump or rainwater)	- Care for a proper platform, big enough, without cracks, and with a drainage channel and soak-away pit. See 8.19. - Care for a hedge or fence not to let animals come near and dirty the place. - Keep the area around the well dry and clean and without rubbish. - Do not wash laundry near the well but provide a place for that at a distance.
dirt or small animals falling into the well	- Care that the well cover is closing properly. See 8.20/3. - Care that there are no cracks in the platform. See 8.33/1.

C) Operating Instruction for a Well

In the project, handing over of a well to a community is used as a chance for health education. This is reinforced by regular follow up visits. The operating instruction takes place at the well site and is based on the knowledge people already have on the subject, e.g.

- It is bad to drink dirty water.
- Little rain will give little water in the well.
- If the well is misused, there will be no other nearby source of good water.
- If the well is open, it is dangerous for children and animals.
- If a pump breaks down, there will be no water.

The topics covered are the water cycle, keeping the well and its surroundings clean, taking care of the hand pump, and using it properly. The methods used are practical demonstration, drama and posters together with explanations. For hand pump caretakers this topics will be covered, together with the duties and technical information, in a small seminar.

The following posters are used for operating instruction of a well.

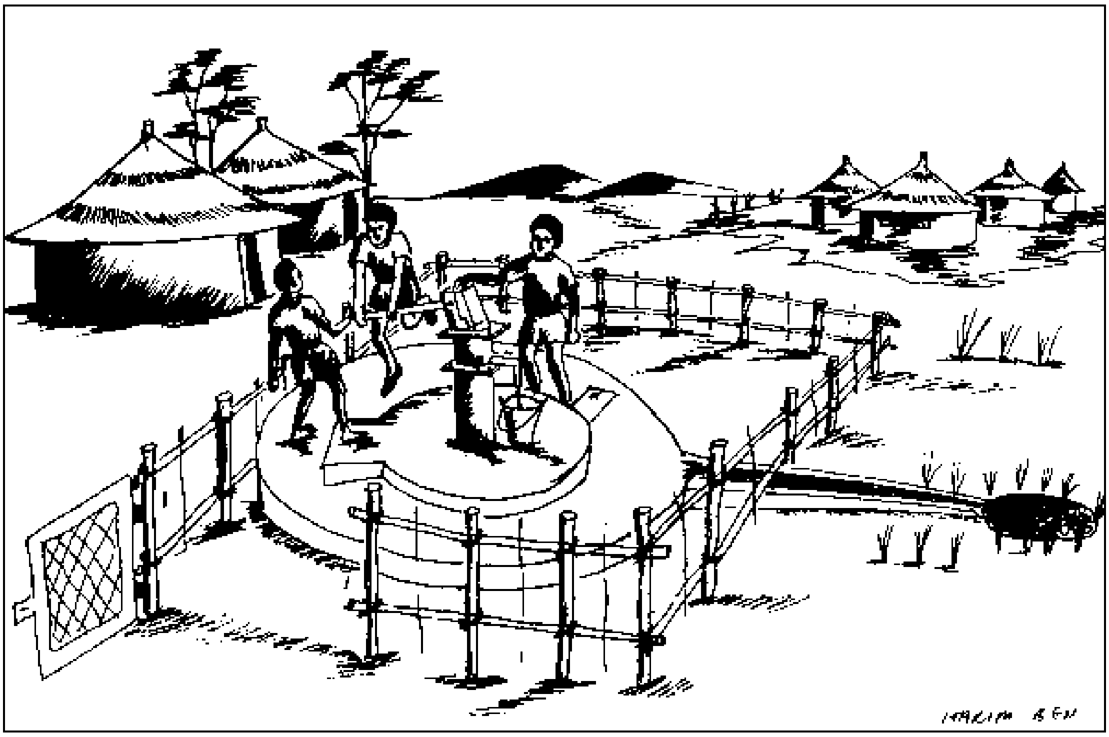

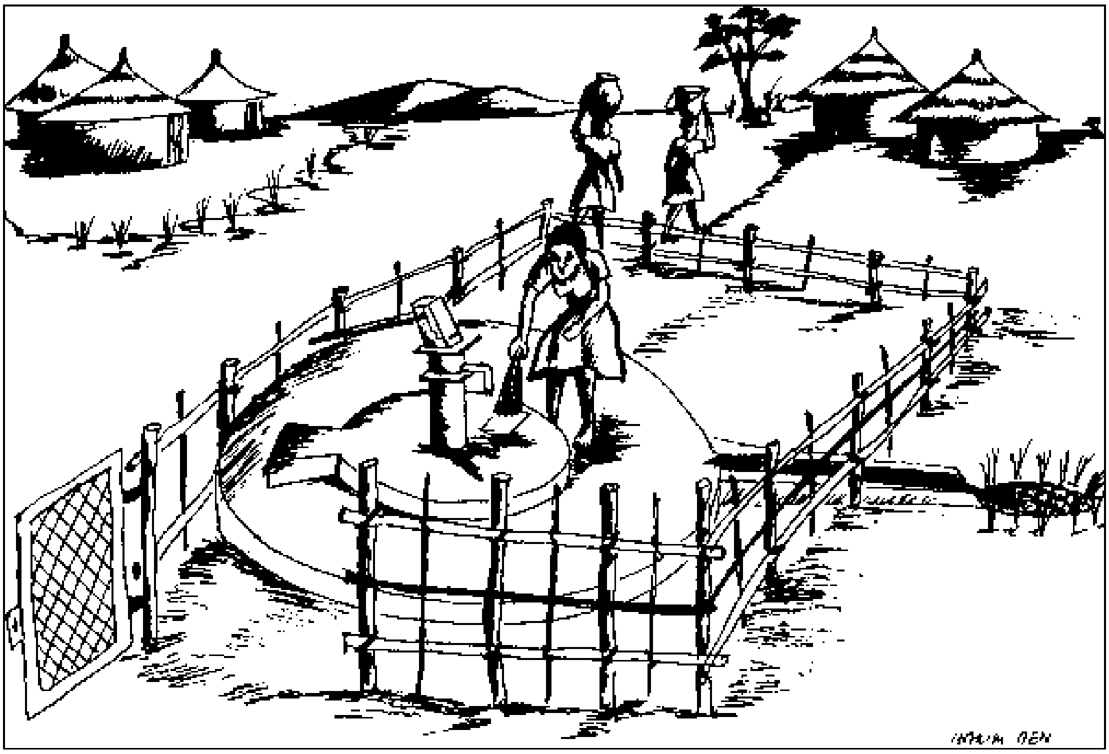

10. Appendix

10.1. List of Abbreviations

A/...	Assistant...
Adm.	Administration
BH	Borehole
ca.	circa = about
CD	Community Development
CDO	Community Development Officer
CL	Compost Latrine
c/o	care of
e.g.	exempli gratia = for example
etc.	et cetera = and so on
...f	... and the following page
...ff	... and the following pages
GW	Groundwater
HP	Hand Pump
ID	Inside Diameter
i.e.	id est = that is
L	Latrine
Log	Logistics
£S...m/ms	Sudanese Pounds... milliemes
OD	Outside Diameter
pc	Piece
pcs	Pieces
PMT	Project Management Team
San	Sanitation
SCC	Sudan Council of Churches
W	Well
WC	Water Closet
WS	Water Supply
WT	Water Table

Abbreviations for Measurements see 5.3
Abbreviations in Mathematics see 5.4 and 5.7

10.4. List of Illustrations (from literature)

References to illustrations page numbers and authors given in the table below reflect the printed version. In order to have the exact correspondence please consult the PDF version of this file.

All illustrations not mentioned in the following list as well as the adaptions were made by Márta Guóth-Gumberger.

Section	Illustration Page No.	Taken from/Made by
1	1.3/2; 1.6/6; 1.7/1	Ben Hakim
2	2.4/4; 2.7/2; 2.8/2; 2.12/1	Ben Hakim
	2.18/1-4; 2.18/6	bibliography No. 12; 27
3	3.1/2; 3.3/2; 3.6/1; 3.7/1; 3.8/1; 3.9/3	Ben Hakim
4	4.8/1-3; 4.19/3	Ben Hakim
	4.4/2; 4.8/5; 4.12/1f; 4.14/3-6; 4.18/4f	Mike Gogonya

Section	Illustration Page No.	Taken from/Made by
	4.1/4	The Guardian Weekly
	4.6/1	The International Women's Tribune
	4.6/3 (below)	Sueddeutsche Zeitung
	4.6/3 (top); 4.8 (adapted); 4.12 (adapted); 4.14 (adapted); 4.16/2; 4.18 (adapted); 4.23/3 (below); 4.27 (partly adapted)	bibliography No. 20; 37; 48
6	6.4/8; 6.6/14	Ben Hakim
	6.3 (partly adapted)	catalogue 1986, Luna AB Sweden, and catalogue 1983, Mittermeyer, W-Germany
	6.1/20	manual diaphragm pump, Van Reekum Materials, Netherlands
	6.1/21	manual Hatz Generator, West Germany
	6.1/22 (bottom); 6.6/2 (adapted); 6.6/6; 6.7 (adapted)	bibliography No. 6a; 8; 44
7	7.2/2; 7.3/1; 7.6/3; 7.8/3; 7.12/3	Ben Hakim
8	8.7/5; 8.9/2; 8.37/7 (left); 8.39/3-7	Ben Hakim
	8.24/24 (adapted)	leaflet, Mono Pump
	8.24/29	leaflet, Homa Pump
	8.24/30	leaflet, Jet pump
	8.24/7-30 (partly adapted); 8.30 (adapted); 8.35 (adapted); 8.37/4,6	bibliography No. 18; 21; 22; 44; 46
	9.9/2; 9.19/2; 9.20/5; 9.21/2	Ben Hakim
	9.6/1,2(bottom), 3-10; 9.17/2-32	Mike Gogonya
	9.1/2; 9.2/2; 9.2/3; 9.6/2 (top),4 (bottom)	Stephen Hakim
9	9.3/1; 9.3/2; 9.3/5f; 9.5/2f (adapted); 9.6(adapted); 9.12/2; 9.12/3 (adapted); 9.12/4 (top, adapted); 9.20/1-4; 9.11/2; 9.22/3	bibliography No. 6; 23; 34; 48; 49
0 to 9	drawings title pages	Ben Hakim

10.5. Bibliography

Literature used and recommended for further studies:

1. A Growing Problem, by David Bull; OXFAM, 2 74 Banbury Road, Oxford OX 2 7 DZ, England

2. A Manual And Resource Book For Popular Participation Training, 4 Vol., UN-Publications ST/ESA/66 Vol. I-IV; UN Publications, 1211 Geneva, Switzerland

3. A Manual For Group Facilitators, by The Centre for Conflict Resolution; The Centre for Conflict Resolution, 731 State Street, Madison, Wisconsin 53703, USA

4. African Churches And People's Development, ccpd-document No. 4; WCC, P.O. Box 66, 1211 Geneva 20, Switzerland

5. Appropriate Building Materials, by Roland Stulz; SKAT, Varnbuelstr. 14, 9000 St. Gallen, Switzerland

6. Biology, by Soper/Smith; MacMillan Publishers

6a. Brickwork For Apprentices, by J.C. Hodge; Edward Arnold

7. Bridging The Gap, by Save The Children; Save the Children, 54 Wilton Road, Westport, Conn. 06880, USA

8. Building Science And Materials, by John Elliot; MacMillan Publishers

9. Communicable Diseases, by Eshuis/Manschot; AMREF, P.O. Box 30125, Nairobi, Kenya

10. Communication, by C.S. Deverell; Gee & Co. Publishers

11. Communication Skills For Rural Development, by McDonald/Hearle; Evans Brothers Limited

12. Communications Guide for Extension Workers, by RSCTU/UNICEF; UNICEF, Eastern Africa Regional Office, P.O. Box 44145, Nairobi, Kenya

13. Community Development Workers Training Series, 7 volumes, by UNICEF; address see 12.

14. Development/Seeds of Change, diverse issues; SID, Palazzo della Civilta del Lavoro, Roma 00144, Italy

15. Guidelines For Development, by CCIA; Christian Conference of Asia, 480 Lorong 2, Toa Payoh, Singapore 1231

16. Handbook For Development Workers Overseas, by Glynn Roberts; Returned Volonteer Action, 1 Amwell Street, London EC 1 R 1 UL, England

17. Hand Dug Wells And Their Construction, by Watts/Wood; ITDG Publications, 9 King Street, London WC 2 E 8 HN, England

18. Handpumps, by Eugene Mc Junkin; IRC, P.O. Box 5500, 2280 HM Rijswijk, Netherlands

19. Handpump Maintenance In The Context Of Community Well Projects, by Arnold Pacey; ITDG Publications, address see 17

20. Helping Health Workers Learn, by David Werner/Bill Bower; The Hesperian Foundation, P.O. Box 1692, Palo Alto, CA 94302, USA

21. How To Protect A Water Source And Why?, by Rogers/Kokole; OXFAM/UNHCR, South Sudan Water Team, Juba

22. India Mark II Handpump Installation Manual; Richardson & Cruddas, 23 Rajaji Salai, Madras 600001, India

23. Insecticides, by The Ross Institute; The Ross Institute, Keppel Street, London WC 1 E 7 HT, England

24. Learning From The Rural Poor, by Volken/Kumar/Kathathara; Indian Social Institute, Lodi Road, New Delhi 11003, India

25. Making The Links, Guidelines For Hygiene Education In Community Water Supply And Sanitation, by IRC; IRC, address see 18.

26. Maths For Living, by W.D. Wright; James Nisbet

27. Navamaga, Training Activities For Group Building, Health And Income Generation; Overseas Education Fund, 2101 L Street NW, Suite 916, Washington DC 2003 7, USA

28. Notes For Draughtsmen, by Neil Orton; Mac Donald

29. Ordinary Level Mathematics, by F.G.J. Norton; Heinemann

30. Organisational Techniques; Overseas Education Fund, address see 27.

31. People In Development, by John Staley; SEARCH, 256 First Block, Jayanagar, Bangalore 560011, India

32. People's Technologies and People's Participation, by Pascal de Pury; WCC, address see 4.

33. Sanitation And Disease, by Feachem/Bradley/Carelick/Mara; John Wiley

34. Sanitation Without Water, by Uno Wimblad/Wen Kilama; Mac Millan Publishers

35. Shallow Wells, by DHV; DHV Consulting Engineers, P.O. Box 85, Amersfoort, Netherlands

36. Small Excreta Disposal Systems, by Feachem/Cairncross; The Ross Institute, address see 23.

37. Teaching And Learning With Visual Aids; Educational Materials Unit, Program for International Training in Health, School of Medicine, University of North Carolina, Chapel Hill, North Carolina, USA

38. Technical Health Training Manual, 2 volumes; Peace Corps, Information Collection and Exchange, 806 Connecticut Avenue NW, Washington DC 20525, USA

39. The Expanded Programme On Immunization, Health Education Trainers' Manual For Extension Workers In Sudan; UNICEF, Juba, Sudan

40. The Programmer's Tool Kit; Overseas Education Fund, address see 27.

41. The Role And Training Of Development Activists, by Khamla Basin; FFHS/AD, FAO, 55 Max Mueller Marg, New Delhi 110003, India

42. Visual Aids; Peace Corps, address see 38.

43. WASH Technical Reports; WASH, 1611 N Kent Street, Room 1002, Arlington, VA 22209, USA

44. Water For The World Series; US-AID, Development Information Centre, Washington DC 20523, USA

45. Water Sources And Their Protection, by Rogers/Kokole; OXFAM/UNHCR, Southern Sudan Water Team, Juba

46. Waterlines, diverse issues; ITDG Publications, address see 17.

47. Well Construction, by Richard E. Brush; Peace Corps, address see 38.

48. Where There Is No Doctor, by David Werner; TALC, P.O. Box 49, St. Albans, Herts., AL 1 4 AX, England

49. World Bank Technical Papers And Technical Notes Series, Water Supply And Sanitation; The World Bank, 1818 H Street NW, Washington DC 20433, USA

CRYSTAL

Building Construction with 14 Modules

Feedback: Mr. D. Volke
TGA Arusha / Tanzania
June 1983

Deutsche Gesellschaft für
Technische Zusammenarbeit (GTZ) GmbH

ARCHITECTURAL DRAWING I

CONTENTS:

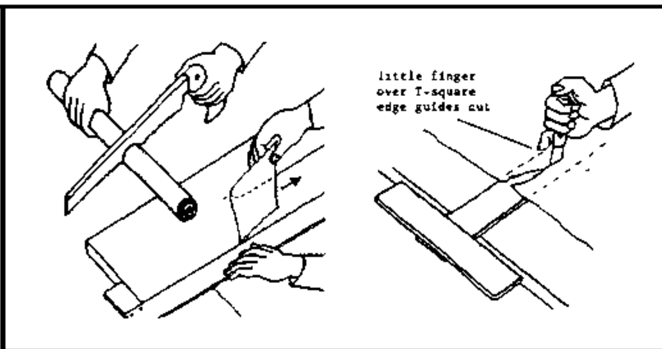

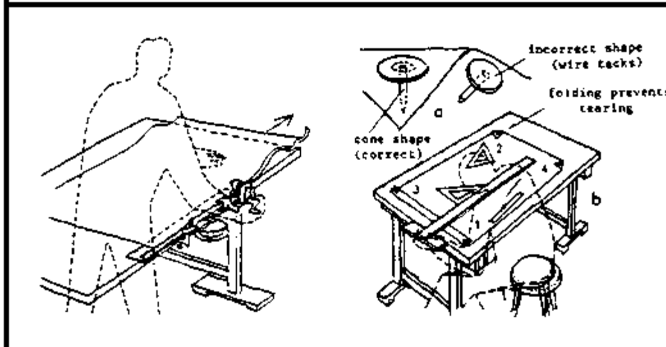

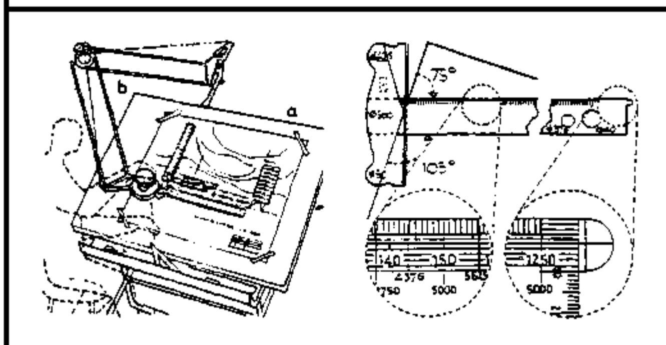

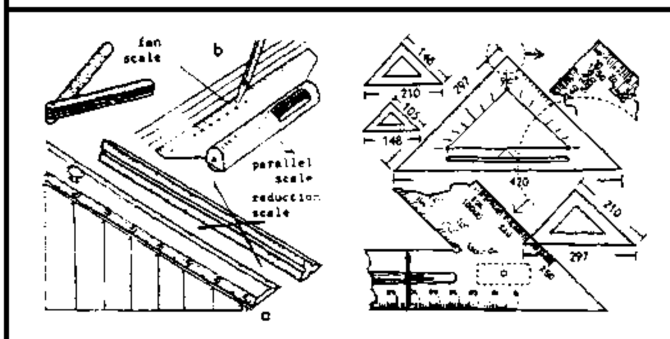

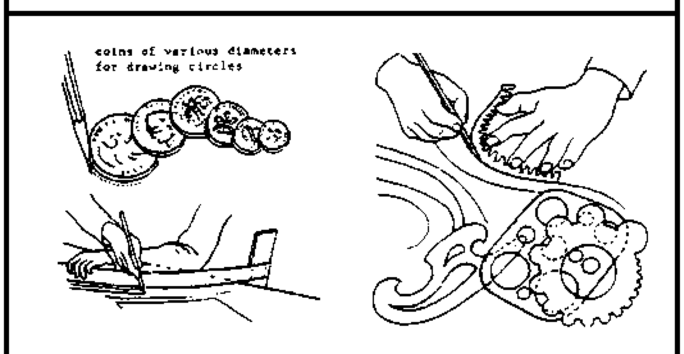

AD I	ARCH. DRWNG.
compiled: D. VOLKE	LECTURE
JUNE '83	CET 1o43/1IoI

TCA TECHNICAL COLLEGE ARUSHA
CHUO CHA UFUNDI ARUSHA
CIVIL ENGINEER. DEPARTMENT

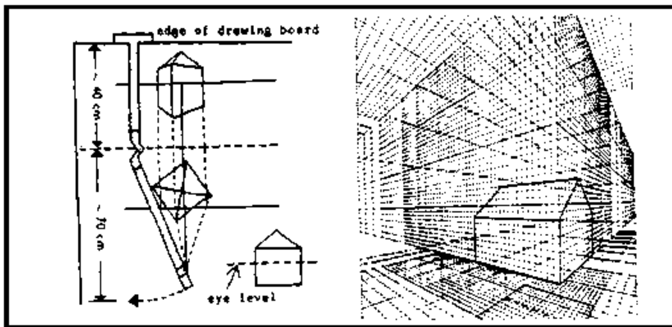

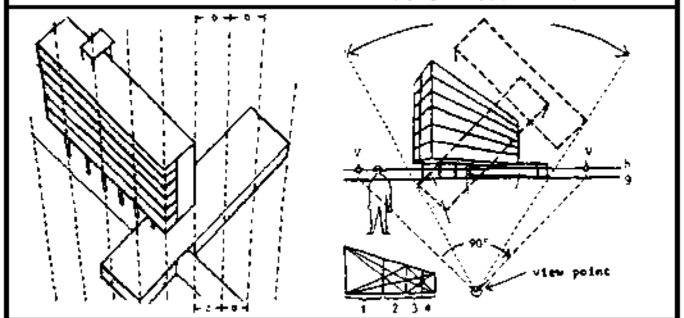

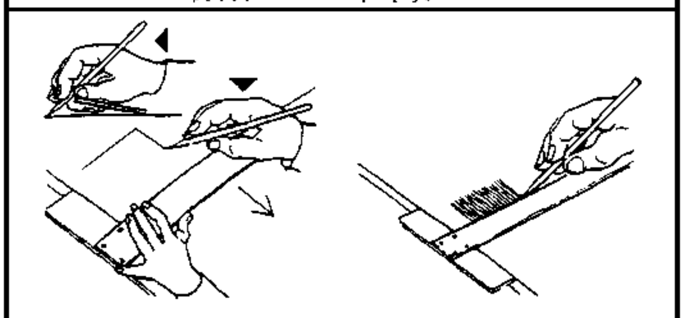

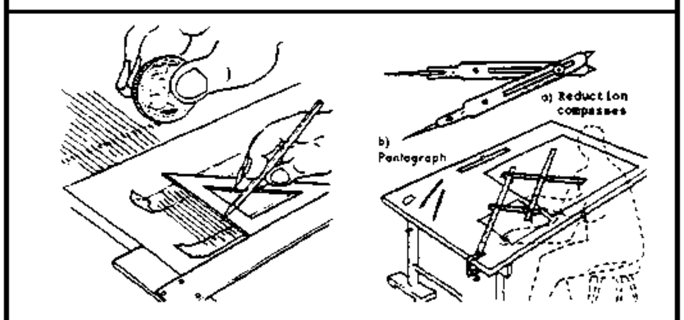

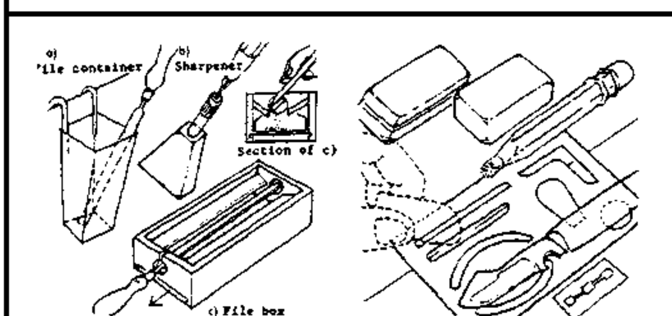

6. GEOMETRICAL CONSTRUCTIONS
6.1 Lines and Angles
6.1.1 To bisect a straight line AB
6.1.2 To divide a straight line into a given number of equal parts
6.1.3 To divide a straight line AB into any ratio
6.1.4 To construct an angle of 90°
6.1.5 To construct an angle of 45°
6.1.6 To construct an angle of 60°
6.1.7 To construct an angle of 30°
6.1.8 To bisect any given angle
6.1.9 To construct an angle similar to a given angle
6.1.10 To draw a line PARALLEL to a given line
6.2 Triangles
6.2.1 To construct an EQUILATERAL triangle
6.2.2 To construct a triangle with given BASE ANGLES and ALTITUDE
6.2.3 To inscribe a circle in a given triangle ABC
6.2.4 To circumscribe a circle around a triangle ABC
6.3 Circles
6.3.1 Basic CIRCLE-constructions
6.3.2 To draw a tangent to a point A on the circumference of a circle
6.3.3 To draw an internal tangent to two circles of equal diameter
6.3.4 To find the centre of a given circle arc
6.3.5 To join two straight lines at RIGHT ANGLES to each other by an ABC of given radius
6.3.6 To draw a curve of a given radius joining two circles
6.3.7 To join two straight lines by two arcs of equal radius
6.4 Basic ARCH-Contructions

REFERENCES:

1. "Draughtsmanship"

2. E. Neufert
   "Architect's Data"

3. Dahmlos/Witte
   "Bauzeichnen"

4. Landscheidt/ Schlüter
   "Bauzeichnungen"

5. E. Neizel
   "Fachzeichnen für das Baugewerbe 1"
   - Grundzeichnen -

1. AIMS AND PURPOSE OF ARCHITECTURAL DRAWINGS

Architectural drawings are made as a MEANS of COMMUNICATION between
- the client
- the architect
- the engineer
- the building authority and
- the people, who are executing the construction work.

One can define architectural drawings as a LANGUAGE. Therefore the drawings should be:
- easily understandable
- clearly arranged
- unequivocal
- correct
- standardized and
- clean

in order to avoid mistakes and misunderstandings, which may become very expensive.

1.1 Contents of architectural drawings

Architectural drawings should show

I. the ideas and immaginations of the designer (architect)

II. the type of the building or structure, which has to be in accordance with
   - the rules of building construction
   - the availibility of building materials
   - the financial possibilities of the client
   - the regulations, bylaws and building rules of the local authority

1.2 Types of Architectural Drawings

Each type drawing has its special contents and has to save its own purpose.
There are different types of architectural drawings:

1. Sketch Drawings: show the solution of the job with the approximate measurements of the rooms and construction members as well as the arrangement of the buildings on the site.
   common scales 1:500, 1:200.
2. Design Drawings: Show the agreed solution of the job with the exact measurements of the rooms and construction members. For submission to obtain a Building Permit they have to be in accordance with the regulations of the LOcal Authority.
   common scales: 1:100 (1:200)
3. Working Drawings: Have to content all necessary specifications and measurements of the rooms and construction members in order to carry out the job properly.
   They also have to specify the used building materials and structures.
   common scale : 1 : 50
4. Detail Drawings: complete the Working Drawings for specific parts of the buildings in a bigger scale.
   common scales 1:20, 1:10, 1:5, 1:1
5. Special Drawings: give particulars about special constructions such as:
   Reinforced concrete work, steel - and timber work, sanitary or electrical systems etc. For such drawings, other construction members are only shownas far as necessary to understand the drawing correctly.
   Scales as necessary.
6. Accounting Drawings: give all necessary informations for the accounting.
   Scales as necessary.
7. Stock-Taking Drawings: indicate all - for a certain purpose - necessary particulars and informations about an existing building
   Scales as necessary.

TYPE OF DRAWING	SCALE
1. Sketch Drawings	1:500,1:200
2. Design Drawings	1:100,(1:200)
3. Working Drawings	1: 50
4. Detail Drawings	1: 20,1:10, 1:5, 1:1
5. Special Drawings	as necessary
6. Accounting Drawings	as necessary
7. Stock-Taking Drawings	as necessary

2. DRAWING EQUIPMENT

2. DRAWING EQUIPMENT

In the following, only the principle items of drawing equipment required by the draughtsman are mentioned.
The draughtsman, especially the beginner, is advised to purchase the best available instruments he can effort and he should handle and maintain them carefully.
Well kept drawing equipment is the prior condition for making good drawings.

PENCILS

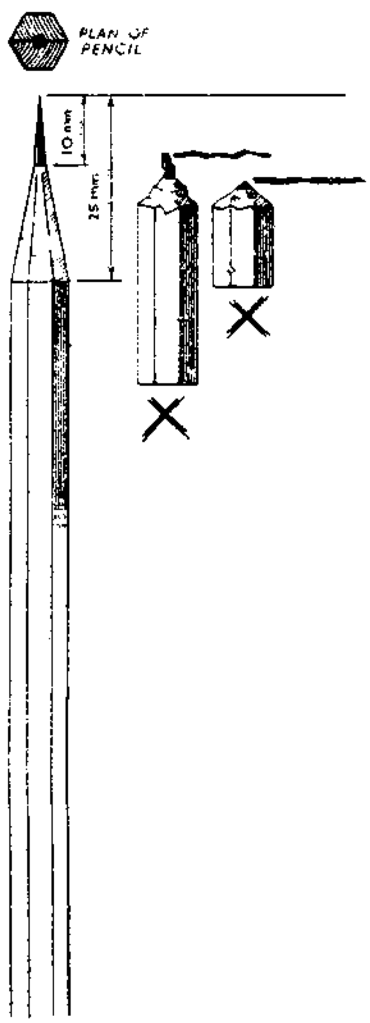

PENCIL

2.1 PENCILS
Ordinary drawing pencils are made of cedarwood with leads of compressed clay and graphite and are about 175mm long. There are round and hexagonal types available. The hexagonal type is more easily held in the fingers and the pencil does not roll off the board or table. Always try to by the best pencils you can obtain because the leads of which are gritty or crumbly make good draughtsmanship impossible.

When a pencil has been reduced to about half its length by sharpening, the 'balance' tends to be destroyed and it becomes difficult to control. The short length should be put in a holder. In case you cannot find any holder, a stripe of paper can be rolled around the end an gummed, to increase the length and make the pencil more manageable.

Pencil points should be long, round and evenly tapering the exposed lead should be about 10 mm long, and the wood cut back a further 10-15 mm. The point must be round, and then, if the pencil is slowly revolved as lines are drawn,it will wear away evenly and remain sharp for some time.

Clutch pencils are a popular alternative to the ordinary pencil of similar shape and size, consisting of a metal lead holder into which leads of varying degrees or various colours can be inserted. A push bottom operates the clutch and enables the lead to be withdrawn or fully protected as required. The main advantage of the clutch pencil is that balance is always constant, but it is heavier than the wooden pencil.

There is a special type of clutch pencil for thinner leads (between 0.3 - 0.9 mm) which makes sharpening unnessesary.

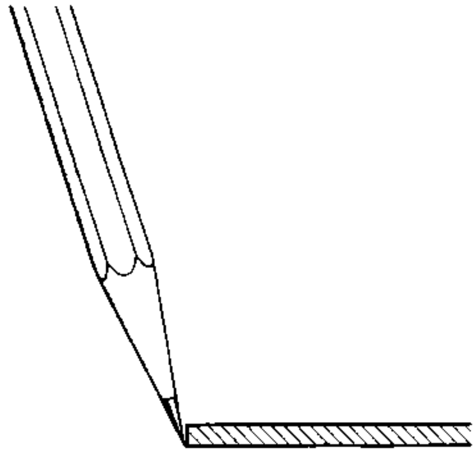

Leads are made in varying degrees of hardness and softness, ranging from 9 H, the hardest, to 6 B, the softest. The extreme grades are very little used. Most drawings can be carried out by using

2 H
H (-hard)
F (-firm)
HB
B (-back)
2 B

Setting out lines and fine work may be done in H, rogh sketching in B. Beginners should not use pencils harder than H on cortridge and similar drawing papers. It is a common error to resort a hard pencil because the point lasts longer and the line is less likely to smudge, properly used HB pencil will keep its point just as long and will give a much better line whilst pomitting greater freedom of wrist action. Hard pencils bite into the paper and make harsh wiry lines. Smudging is due to carelessness and the student should learn to avoid rubbing the lines of his drawing.

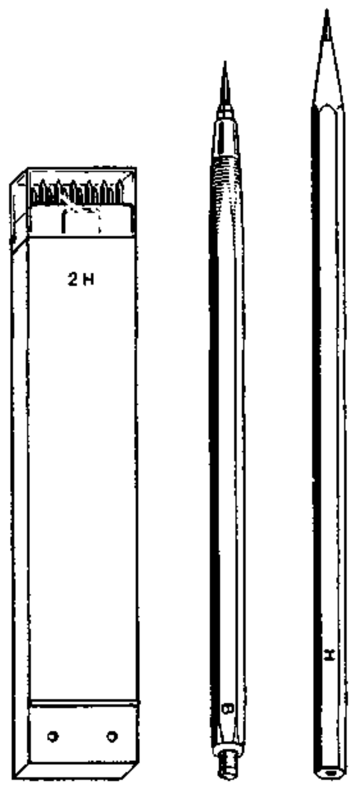

Sharpening: The best way of sharpening an ordinary pencil is by means of a penknife. The pencil is held in the left hand, below table-level and pointing downwards so that chips and lead dust cannot fall on the drawing paper. And with the penknife in the right hand inclined cuts are made firmily and regularly to remove the wood ground the point. The final sharpening is done with the penknife blade held more or less at right - angles to the lead - this reduces the risk of a sudden cut going right through the point.

PENKNIFE

Pencils should not be sharpened with the lead held against a thumb - a sure way to make hands and clothes dirty - nor should safety - razor blades be used - they are much too sharp and difficult to control.

Sand paper pads: should never be used They are not only too coarse to produce anythin like a good point, but they make an intolerable amount of dust which is rapidly transferred to fingers, clothes, and drawing papers.

Mechanical pencil sharpeners which can be screwed either to the table or wall ar generally efficient and save a certain amount of labour, although the points usually need a final touch of the penknife.

The small sharpeners that can be held in the fingers are quite useful, although care must be taken that lead dust and shavings fall into the waste basket or otherwise safely disposed of.

It must be realised that pencils require frequent sharpening when in continous use, and the beginner should start with a good stock and not be surprised if they wear out quickly.

Sharpening a clutch pencil, small lead pointers are often used, although its use is a potential source of black dust on fingers and paper; it is better to use a special pointing machine.

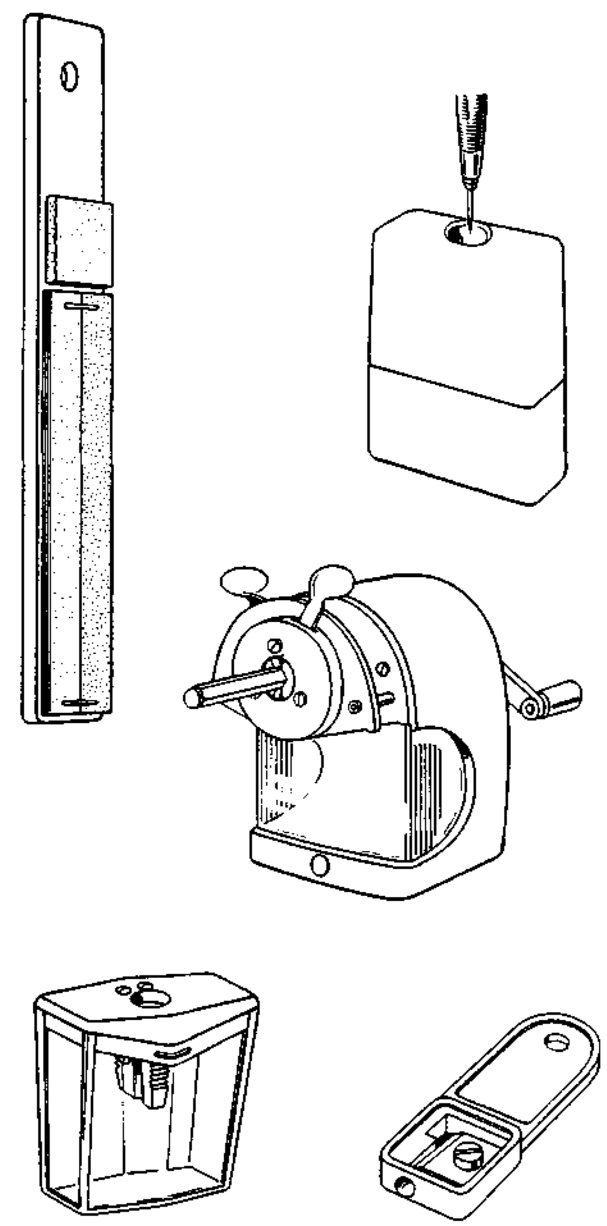

DRAWING PENS

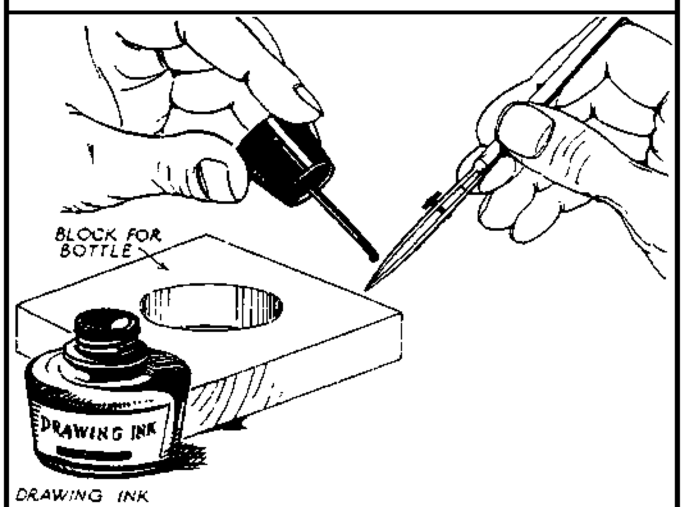

2.2 DRAWING PENS:Straight lines in ink are ruled in conjuction with the T-square and set-square (with the drawing board equipment or with a drafting machine) by means of special drawing pens. There are three types of drawing pens
- Ruling pens
- Graphos
- Rapidographs

The old type of Ruling pen has frequently to be filled either by means of the dropper from the ink bottle, or dipping an ordinary freehand pen into the bottle and transferring the ink to the blades. It is better not to put much ink between the blades. Practice will indicate how much is satisfactory. The thickness of the line required is obtained by means of the adjustment screw and by testing at the side of the drawing paper or on scrape of similar paper.

DRAWING PENS

FOUNTAIN-PEN

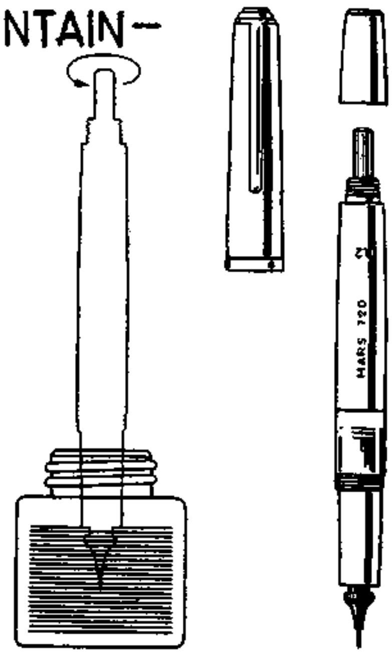

GRAPHOS

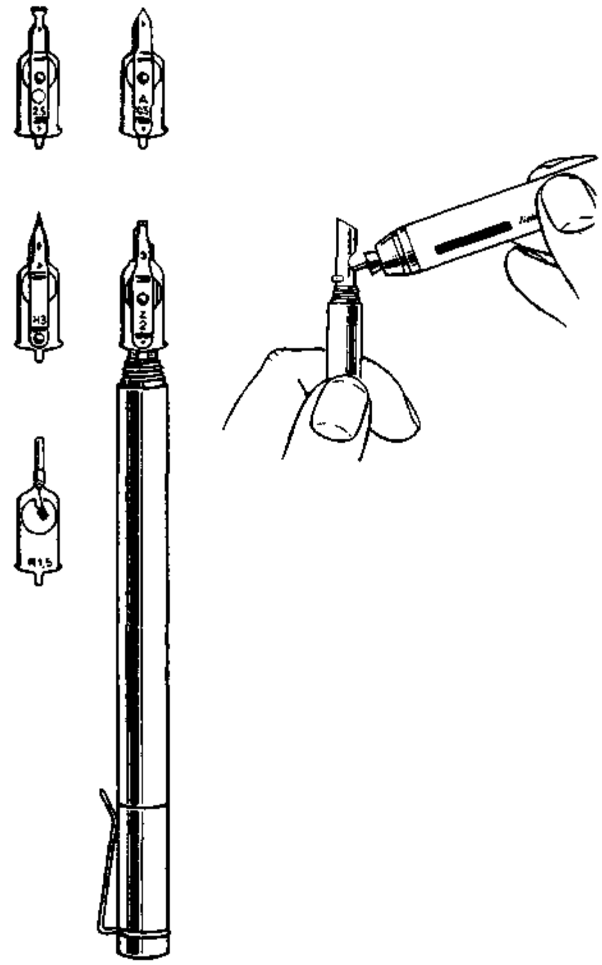

Graphos and Rapodographs are based on the fountain-pen principle, with ink reservoirs, so that they can be used for long periods without refilling. Interchangeable nips or drawing elements are used for different thick - nesses of lines. The most common set consists of 0,18, 0,25, 0,35, 0,7, 0,5 1,0, 1,4, (2,0) mm. The pens are also be used for free-hand drawing of lines and for freehand and stencil lettering. The graphos pen has special nibs for freehand lettering.

LETTERING NIB with HOLDER

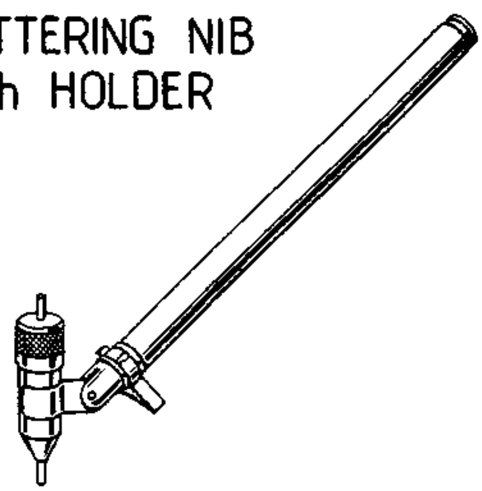

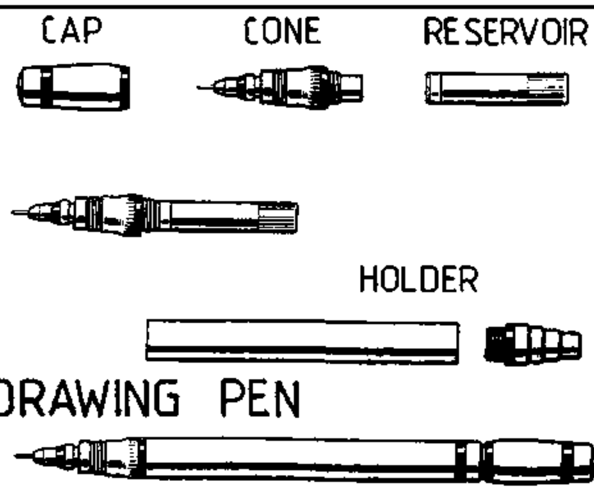

DRAWING PENS

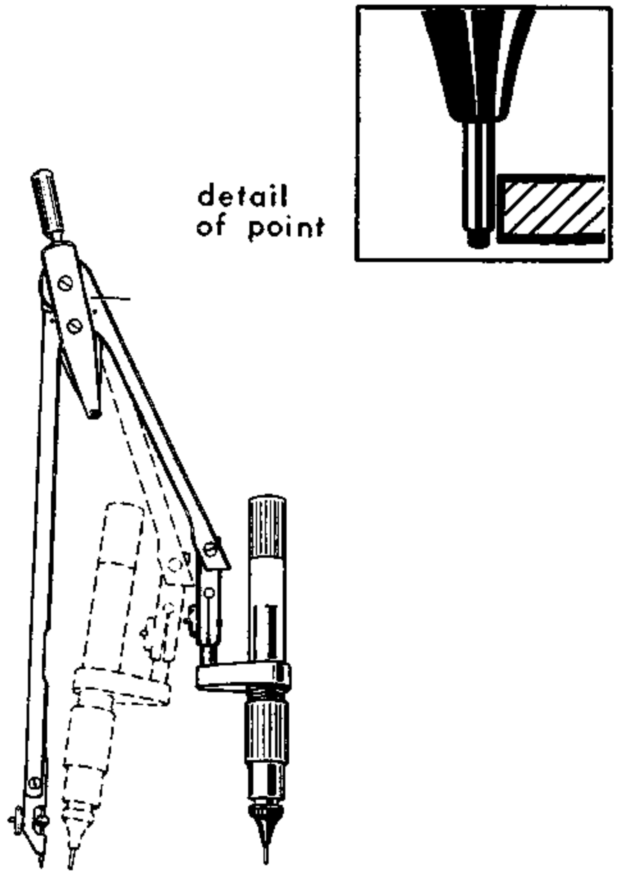

Instruction for use and care come with the pens and it is very important to follow these instructions, especially in regard to cleaning.Keep the pens always clean and do not allow them to become clogged or encrusted with ink, so that undue time has to be wasted in making them work.
All kinds of Drawing Pens should be held perfectly upright against the edge of T - square or set - square, and should be drawn smoothly with even pressure from left to right or in upwards direction.

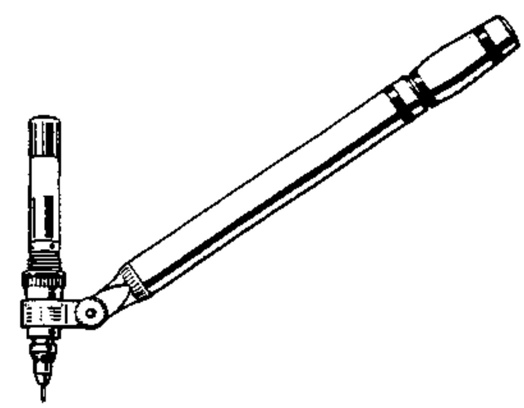

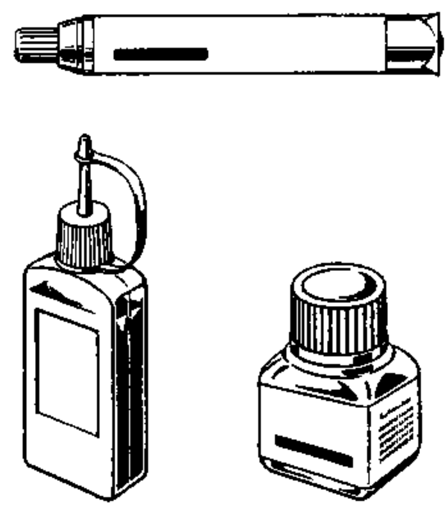

Drawing ink: Water proof black ink is used for line drawing. It can be taken from small glass bottles with dropper or pipette for filling ruling pens and other instruments, from plastic bottles for Rapidographs and similar pens, or from special cartridges for graphos pens etc.
Not all inks are suitable for the drawing pens described earlier or for the use on all kinds of film and the maker's recommendations should be followed.
Containers should always kept closed (exept when pens or instruments are being filled) to keep out dust and to lessen the risk of accidental spills.

In warm weather it may be found that the ink will run more freely if it is slightly diluted with clean, preferably distilled water. Bottles should not be shaken once they are in use.
Inks should never be mixed and dirty pens must not be used: Chemical action may be set up and the ink becomes lumpy.
Drawing inks are obtainable in different colours.

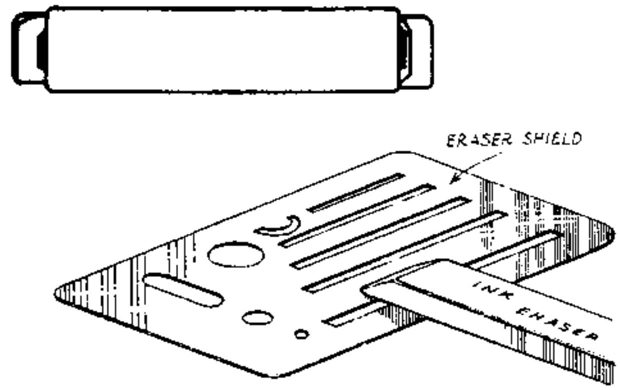

Erasers: Alterations, corrections, and the removal of unwanted lines are best made by rubbing with a soft rubber or vinyl eraser. Erasers should be large enough to be easily gripped, but very large rubbers last too long and, as the outside surface becomes hard and useless in time, it is probably better to keep to small sizes. When the surface of the eraser is affected, it can be cut away or, if not too bad, rubbed clean on an old scrap of paper.

For a large area of paper the so called gum eraser is probably quicker and more gentle to the surface. For removing soft pencil shading, which are smeared by on ordinary eraser, a special putty rubber must be used.

So called 'glass erasers' are generally efficient. They consist of a holder (metal or plastic) into which bristles of glass are inserted. A screw bottom operates a mechanism which enables the glass bristles to be withdrawn or fully protected as required. The main advantage of the glass eraser is that glass bristles are gentle to the surface of tracing paper, but they have to be handled carefully to avoid small particles sticking in your hand, which is quite painful.

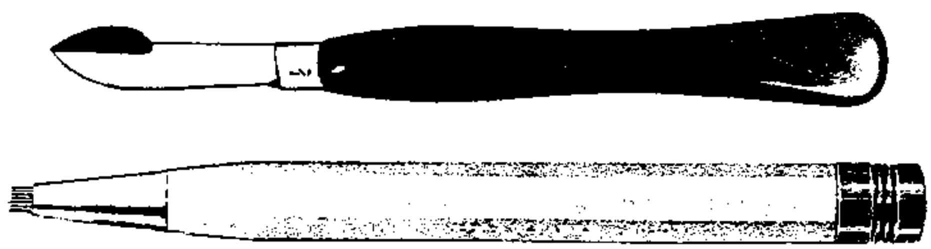

Ink lines on drawing paper are removed by hard erasers. As usually only a small portion of an ink drawing has to be removed and the surrounding lives disturbed as little as possible, the rubbing can be don through a thin metal or celluloid rubbing shield, which has openings to suit areas to be erased. Lines on tracing paper are best removed by scraping gently backwards and forwards with a safety razor blade held vertically between finger and thumb.

Electrically operated erasers are sometimes installed in large drawing offices. The machine is suspended over the drawing table and is drawn down to the surface of the paper and a small motor rotates rapidly a piece of pencil rubber or ink eraser.

The small particles of rubber which result from rubbing out should be carefully removed from the surface of the paper by blowing or by lightly flicking with a clean, smooth DUSTER.

COMPASSES

2.3 COMPASSES
The fig. shows a common pattern of compasses, which are used for drawing circles and arcs. One leg terminates in a needle point and the other leg can be fitted with pencil or pen. An additional needle pointed leg can also be obtained for converting this instrument into a pair of dividers. For large circles and arcs a lengthening bar is valuable. Both legs of the compasses are jointed so that they can be bent to keep the point more or less perpendicular to the paper.

Needle points are removable and are usually shouldered at one end - this end is best for use in drawing circles, as the point does not penetrate the paper too far. The instrument should be held at the top and pressure must be only sufficient to keep the centre from slipping and to maintain a smooth, even line for the curve. The two points of the compasses must be carefully adjusted. The pencil lead should be the same grade as the ordinary pencil being used on the same drawing. A 12 mm length can be out from the bottom of the pencil for the purpose.

It should be sharpened to a fine chisel point and arranged tangential to the circumference, although for small circles a round point is probably better.

Pens are capable of ajustment in the manner of ruling pens. The thickness of.the ink line should be tested at the side of the paper before the required curve is drawn.
Special compass/pen attachments are available for use with the Rapidographs and with small pump compasses for drawing small circles.

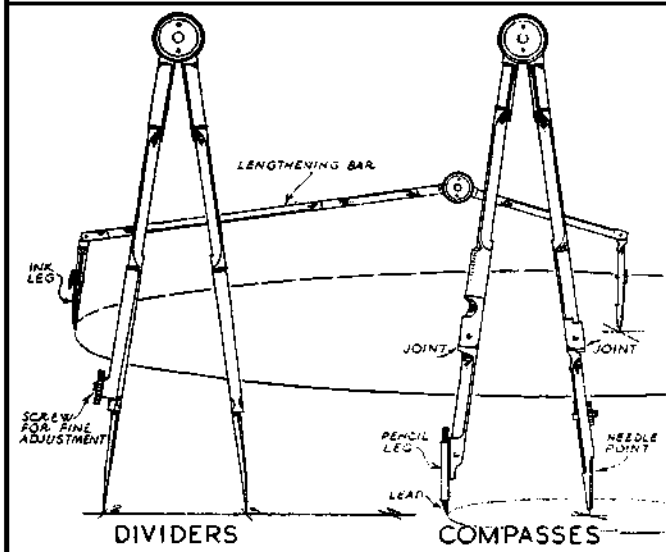

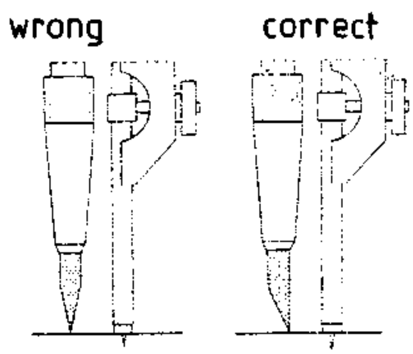

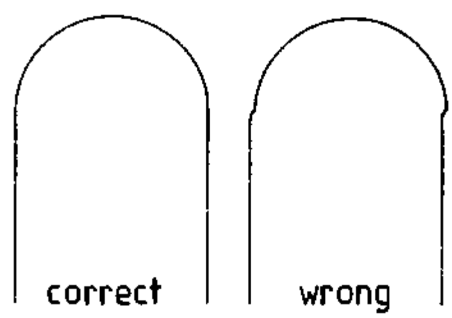

Beam compasses
For drawing larger circles than are possible with ordinary compasses and the lengthening bar, beam compasses can be used. They consist of a centre point and a fitting, with interchangeable pencil and pen legs, which are screwed to a bar to give the radius required.

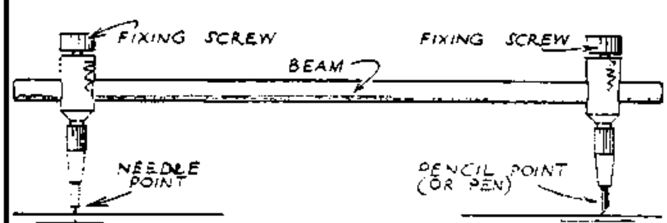

BEAM COMPASSES

Dividers
The fig. illustrates a pair of dividers used for dividing lines into equal units by trial and error and for multiplying or transferring distances. A convenient size is about 140 mm long. A spring screw attachment to one leg for fine adjustment is an advantage. This hinge should move easily but should not be loose.

Spring bows and pump compasses.
Small dividers and pencil and pen compasses for accurate and fine work are called spring bows. Adjustment is made by means of a screw either at the side, or in the middle at the instrument. There are a number of variations of theses instruments including precision - made pump compasses and rapid adjustment compasses. It should be mentiones, however, that for general work small circles and arcs are drawn through templates.

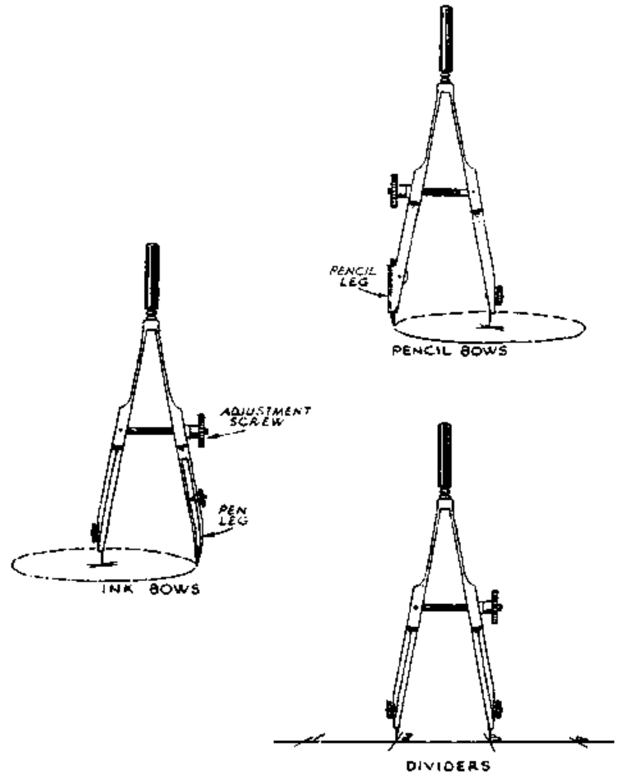

SPRING BOWS

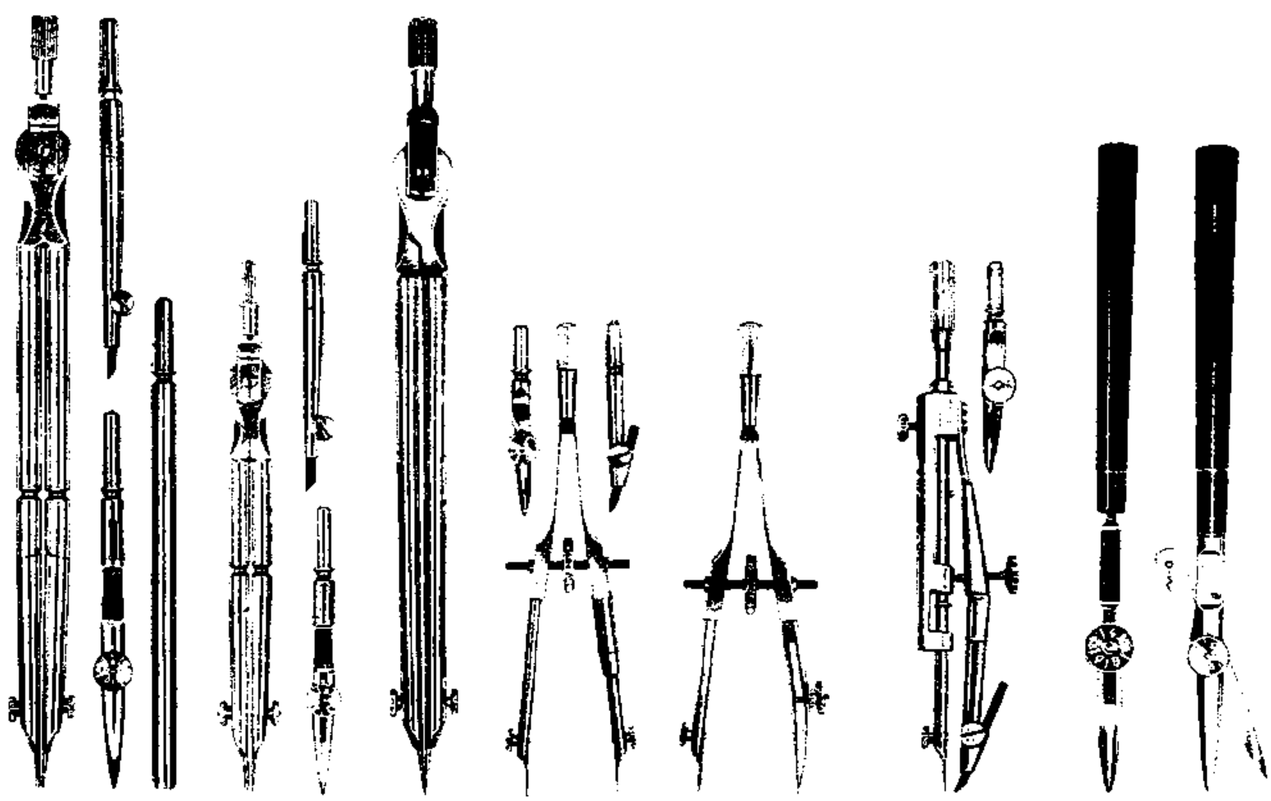

ADI	DRAWING EQUIPMENT	ARCH. DRWNG.
compiled : D.VOLKE		LECTURE
JUNE '83		CET 1o43/1 2.3 o9
TCA TECHNICAL COLLEGE ARUSHA CHUO CHA UFUNDI ARUSHA	CIVIL ENGINEER. DEPARTMENT	9

2.4 DRAWING BOARDS:
Drawing boards are made in sizes to correspond with standard sizes of drawing sheets. The most suitable for general use are:

A 1 : 920 x 650 mm
A 0 :1270 x 920 mm

The fig. illustrates three types of drawing boards. Types A and B, not bigger than size A 1, are suitable for the student as they are light for carrying about and are relatively inexpensive. Such boards can be obtained with metal edges. Type C, which is best for office use, is usually made from spruce and has beech battens secured by screws in elongated washers to allow for expansion and contraetion. The back of the board is grooved to resist warping.
Small drawing boards accapting paper up to A 3 size are now becoming generally available. They are precision made with smooth plastic surface, are light and easily transportable and are often supplied with a carrying case. They are provided with positive sliding drawing heads or rules operating rather linke T-squares for drawing horizontal lines and with matching set squares multipurpose design. Alternatively, they can be fitted with miniature drafting machines. They usually have devices for holding drawing paper in position as pins or staples cannot be used and adhesive tapes tend to spoil the board.

DRAWING BOARDS

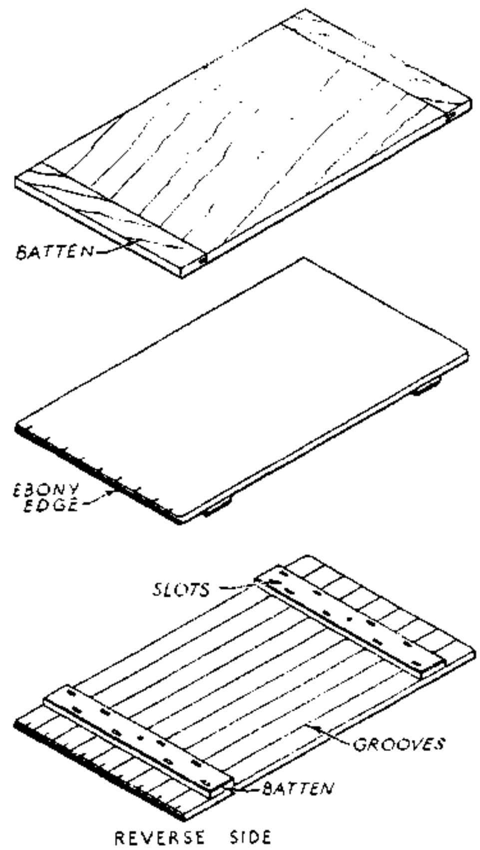

DRAWING BOARDS

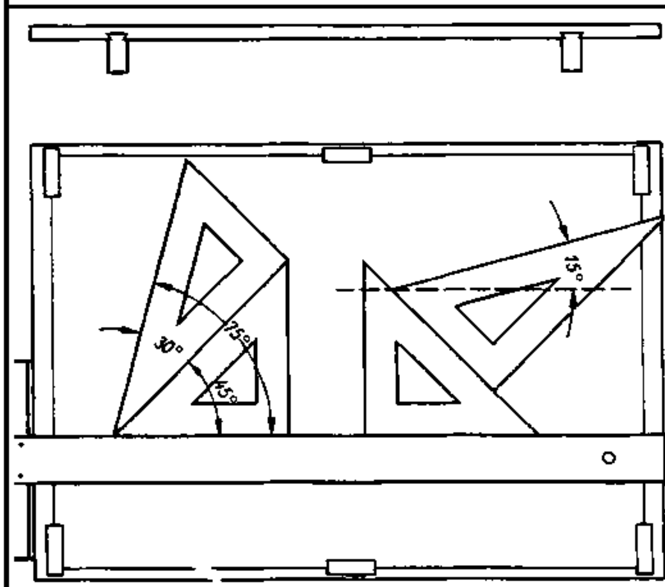

It is important with all types of drawing boards that the faces are perfectly flat and smooth and that they will not twist or buckle with normal use. Edges should be at right-angles to one another. Wooden boards should have a firm even grain, free from knots and should be soft enough to take drawing pins or staples easily and allow the removal without diffeculty. Boards with compostion surfaces can have paper attached by means of spring clip or strips of drafting tabe.

T-SQUARES

2.5 T-SQUARERS

Are used in conjuction with the board for drawing horizontal lines. The head of the T-square being held against the left hand side of the board by the right handed person (reverse T-squares are made for the left handed draughtsmen). Sizes correspond to the lengths of the drawing boards:

A 1   920 mm blade
A 0   1270 mm blade

T-squares are best when made of mahogony with ebony or clear plastic ruling edges or of clear or coloured plastics. For lightness blades have to be made of thin strips of wood (plastics), but this renders them liable to fracture. Therefore: Dont leave them lying about in bridge positions or leaning against walls.
They should either be left flat or hang on pegs.

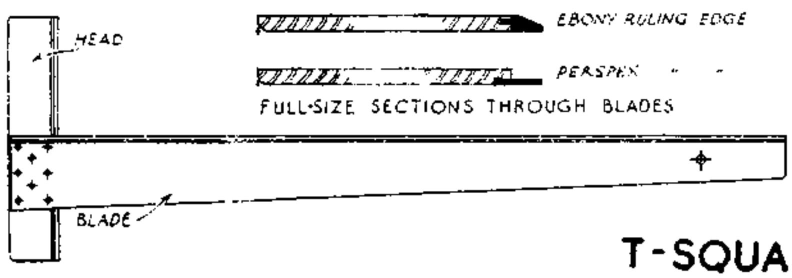

T-SQUARE

- Dont use a T-square as a hammer to knock in drawing pins, a loosing of the fixing between head and blade will be the result.
- Dont use the blade as a straight edge in cutting paper in order to avoid indentations along the ruling edge.
- It is important to keep the underside of the blade smooth and clean, and this is best achieved by wiping it periodically with a soft cloth with a few drops of petrol or similar spirit. Water can be used, but is less effective and may cause warping.

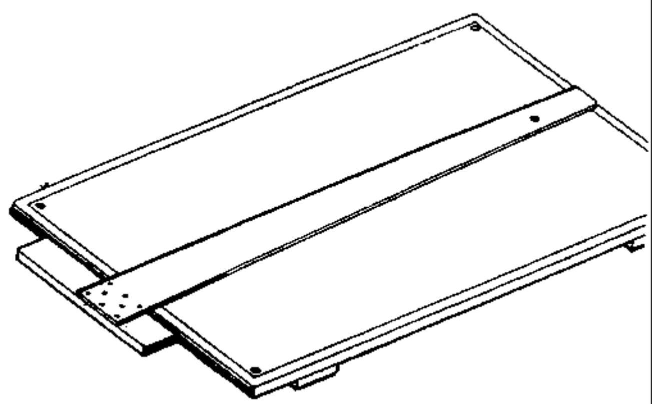

2.6 SET SQUARES

Set-squares are used for drawing vertical and inclined lines. They are triangles of clear plastic about, 2mm thick, and there are three basic kinds as illustrated:

A - 45 degrees
B - 60 - 30 degree
C - adjustable

For general use the length of the longest side should be about 250-300 mm and the edges should be square.

Set squares to be protected from damage. Dents are caused by hard knocks and cutting with a razor blade, etc, along the edge can easily ruin them. They should be kept clean, because dirty set squares quickly transfer the dirt to the drawing.

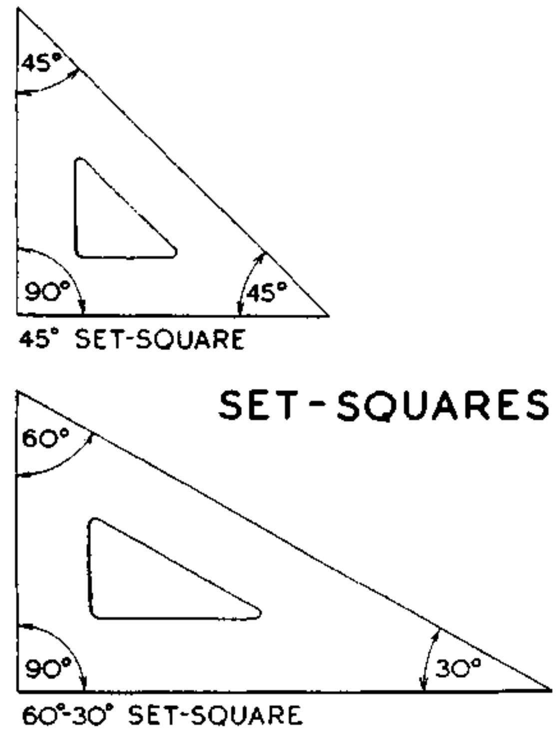

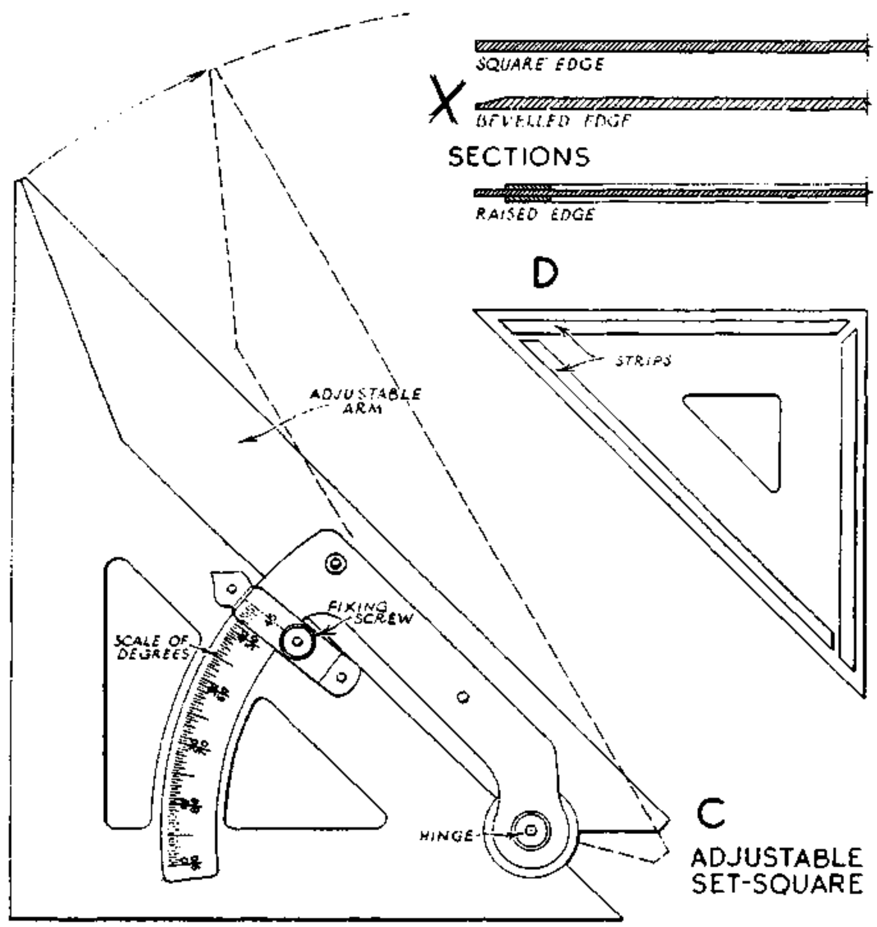

2.7 PROTRACTORS

PROTRACTORS

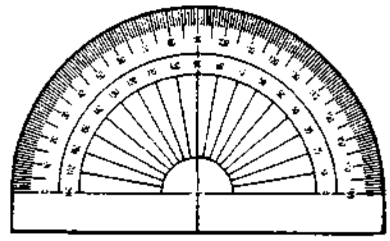

A protractor is used for measuring or for setting out angles. It is a semicircular (or circular) piece of metal or clear plastic with the arc divided into degrees, reading both to left and right, and with the centre and diameter indicated. The protractor is placed so, that the centre coincides with the apex of the angle and the diameter lies along one line the position of the other line on the scale giving the reading.

The most convenient sizes have diameters from 100 mm to 150 mm. The transparent protractor is to be preferred.

2.8 SCALES

SCALES

Scales are thin narrow strips of plastic or boxwood with divisions along each edge. These divisions are in various recognized proportions to actual destances and dimensions, and can be used for making new drawings 'to scale' of for measuring, by 'scaling' existing drawings. There are scales available for metric drawings as well as for drawings in which drawings are related to feet and inches.

Now commonly used by architects and draughtsmen are three edge scales with divisions along each edge in the proportion of 1:1 or 1:10/1:100, 1: 200, 1:5/ 1:50, 1:250/1:2500 and others.

Scales are usually 300 mm long. They never should be used for ruling lines or for any other purpose for which they are not intended, the edges are soon chipped and broken.

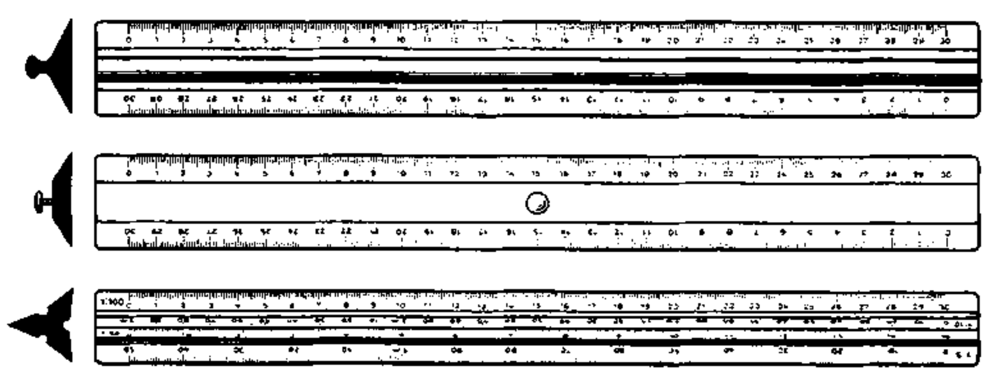

2.9 FRENCH CURVES

French curves are made of clear (or coloured) plastic like set-squares. They can be used for drawing irregular or complex curved lines which cannot be conveniently made up of arcs of circles. Many shapes are available, but one is usually sufficient for architectural drawing. They are not essential, and with practice curved lines can be drawn freehand more rapidly and often with better effected. Long slow curves can be drawn by a series of blended straight lines with acceptable accuracy.

Another device is the flexible ruler consisting of a length of pliable plastic which can be bent to any required curve. Patience is needed to get the correct curvature, but once set the ruler is particularly useful for repetition work.

FRENCH CURVES

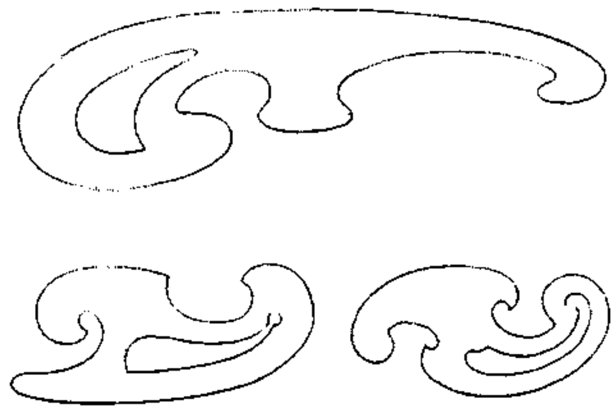

2.10 TEMPLATES

Small circles and ellipses, or parts there of, can often be more easily drawn with the help of plastic templates, which are available for figures of various metric and imperial sizes. There are also special templates available such as Symbol templates for:
- Electrical installation
- Plumbing work
- Furnitures in different scales (1:200, 1:100, 1:50) etc.

The main advantage of these templates is saving time.

Lettering guides, stencil-lettering, transfer-lettering. These are described later under LETTERING.

TEMPLATES

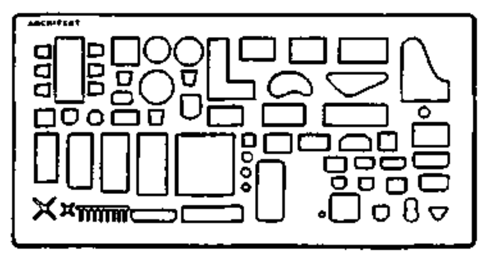

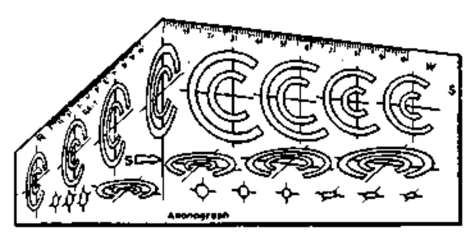

FIXINGS

2.11 DRAWING PINS AND OTHER FIXINGS

Small, flat - headed pins are best for fixing the paper to the board in most cases. They should be well made of brass with sharp round points. The type with the point stamped out of the head is of little use.

As the heads should hold the paper, the pins must be pressed well into the board. Four pins, one at each corner, should be sufficient if put in about 10 mm from the edge of the sheet. Whenever a drawing is repinned the previous pin-holes, unless enlarged or torn, should be used again. Pins can usually be taken out easily by finger and thumb-nail but the blade of an old penknife can be inserted under the head to rise it up in the case of a stubborn one.

Other means of holding the paper to the board are spring steel clips, staples, and drafting tape. Clips are not always secure and sometimes get in the way of border lines, etc. Staples (the smalles tsize is best) are quick and convenient for fastening the paper and do not interfere the running of T - square and set square, but are a nuisance to get out. Drafting tape tends to be an intidy and rather messy fixing method except for short term use. For holding one piece of tracing paper over another, especially where the piece is relatively small and pins cannot be used because they would damage the sheet below as well as get in the way of T-square and set-square, transparent self adhesive tape, such as sellotape, is most suitable as it can be placed away on completion without effecting the paper.

MINOR ITEMS

2.12 MINOR ITEMS OF EQUIPMENT

In addition to the essential equipment already described the following should be readily available for use as the need arises:

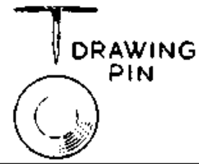

- A good pair of scissors. Cutting knives for thick card and a lighter knife, of which there are many kinds, for thin cardboards and paper. In this connection, a metal ruler or straightedge is useful.

- A piece of cotton-cloth often washed or soft toilet paper for cleaning drawing pens etc.

- A handy scratch pad for notes, memos, rough calculations, testing pens, etc.

- Provisions for the safe-keeping or transporting of drawings.

- Soap, towels and a hand wash basin with water.

PRINTING PAPERS

2.13 PRINTING PAPERS

Printing papers are used for making copies of drawings by photocopying processes. Copies are usually referred to as 'Prints'.
There are different types of photocopying processes (semi-dry dyeline or dry developed by ammonia gas). They all require a transparent or translucent negative e.g. a drawing or tracing media. This is passed in contact with diazo paper sensitive to ultraviolet light, through a machine in which it moves around a special tubular lamp emitting such light.

Where no machine is available the so called 'sun-print' method can be used. A timber or metal frame in accordance with the size of the drawing, covered with glass, the negative, printing paper, and sun: thats all you need for that method. For developing the same method is used as with a printing machine depending on the type of printing paper.

Dyeline prints can be made on different type of papers e.g. on airmail paper, which is very flimsy and difficult to

TRACING PAPERS

2.14 TRACING PAPER, CLOTH AND FILM

These materials are specially treated paper and linen, and polyester film of transparent or semi-transparent nature; when placed over an original drawing they allow the lines underneath to be clearly seen and so copied or traced. The tracings thus made can then be used as negatives for the making of any number of further copies by the photo-printing processes. Drawings can of course be made directly on the materials in question. Almost all production drawings are negatives of one kind or another.

Tracing paper is most economical if purchased in rolls, but for final drawings it is increasingly the practice in offices and in schools of architecture to use pre-cut sheets in the A-sizes, often with printed border lines, title blocks, and sometimes modular or other grids, etc. Tracing paper can be roughly classified into three categories. thin, medium and stout, and two surfaces: smooth and rough. Different makes vary, however, so that it is difficult to particularise as to the most suitable; personal preference plays some part in selection. Thin papers are usually good enough for preliminary sketches but are too flimsy for final negatives.

Smooth surfaces are best for pencil drawings, as the rough kinds wear down the leads and tend to smudge and smear. For roughing out design and many other uses rolls in short widths are handy.
Tracing cloth is nearly always supplied in rolls, although short lengts can be purchased. The material is usually tinted blue, but white is also available. It is much more expensive than tracing paper, and is used mainly for master negatives in ink, but to a lesser extent than formerly as it is being superseded by film. Film is also expensive but has superior transparency and is stated to be stretch-proof and waterproof. It should be used in accordance with the manufacturers recommendations, for example in regard to type of backing sheets, prepartion before inking, and use of erasers.

BACKING SHEETS

2.15 BACKING SHEETS

Drawing boards should be covered with backing sheets, over which the actual drawing paper or tracing media is placed to provide a firm, even working surfaces. This is particularly important if boards have become pitted, scored, damaged or worn.
Thick white cartridge paper is a satisfactory material, cheap enough to be discarded as it becomes soiled drawing pins can be used. Other and harder materials for backing sheets of a semi-permanent nature are thick, flexible plastic sheets usually with a green surface and cellulose-acetate sheets, which can be printed to standard lay-outs and grids.
In connection with backing sheets, a useful device to minimise the marking of drawings by rubbing of the T-square is the fixing of a strip of folded drawing or tracing paper - three or four thicknesses are sufficient - about 20 mm wide along the left-hand edge of the board. Fixing by drawing pins or staples at the ends only is best.

Drawing boards with an integral plastic surface do not normally require backing sheets, but for working on tracing paper a white under sheet is an advantage.

DRAWING PAPERS

2.16 DRAWING PAPERS

There are two main classifications of drawing papers: 1) machine-made papers, such as cartridge, which are used for exercises and line drawings, and 2) handmade or mouldmade papers used for rendered drawings. Mention is made of other types of paper, where necessary, in later chapters.

CARTRIDGE

2.17 CARTRIDGE

This is sold in rolls and A-size sheets, including pads of 30 sheets up to A2 size, as well as in the old standard sizes of antiquarian, double elephant, and imperial.
The paper is made in three thicknesses: 'thin', 'medium', and 'stout'. The thin is usually too flimsy to be of much value, it is also obtainable in rolls either unmounted or mounted on cotton or holland. The rolls can be conveniently cut into the various standard sheets or used for extra large drawings, and are probably more economical for the busy office.

Unmounted cartridge paper has right and wrong sides which can be distinguished by examination - the wrong side has a slightly but regularly pitted surface, and the cut edge of the sheet is usually turned down towards the wrong side.

The surface is fairly satisfactory for pencil drawing and the 'stout' quality will take ink moderately well, but it is not really suitable for colour washes except those of a most limited nature. White cartridge paper, which is usually of better quality, is to be preferred to that which is cream in colour.

HANDMADE PAPERS

2.18 HANDMADE AND MOULDMADE PAPERS

These are obtainable in sheets of standard sizes, and usually in three surfaces: HP (hot pressed) - smooth; NOT - medium; R - rough. The firstnamed is the kind most used for pencil and ink drawings and various types of renderings, particularly work in wash. All the papers can be 'stretched' and some can be obtained already mounted on stiff card or board. Water colour paper is also sold in pads.

PLASTIC-COATED CARD

2.19 PLASTIC-COATED CARD

For particularly fine pencil line and pen and ink drawings some draughtsmen prefer an extremely smooth plastic-coated card, such as CS 10. Great care is needed, however, in working with thi medium as ink lines are easily smudged. Any removal of lines must be made by gently rubbing with a soft eraser.

handle, on medium paper, which is normal and suitable for general use on stout paper which is the best for mounting, colouring and presentation and cotton-backed paper.

Master copies or new negatives, from which further copies can be made, can also be produced on tracing paper, tracing cloth and polyester-based materials. Such copies are used for the adding of specialist information, as a basic for the preparation of working drawings and for supplying remote sites with means of obtaining local reproductions. All dyeline prints tend to fade on long exposure to daylight.

Mention may be made here of other methods such as: -

- true - to - scale (TTS)
- photostats
- microfiling of drawings
- various kinds of ordinary office coppies: thermographic, electrographic and diffusion transfer. Although these types of copies are developed for the copying of typed or printed documents they are excellent for the rapid copying of small drawings - or large drawings in parts which can be subsequently joined. For paper sizes (up to A 1) the dyeline process should be used.

3. LETTERING

3. LETTERING

Little progress can be made in draughtsmanship without attention being paid to lettering. Almost every drawing has to be titled and many of them, particularly working or production drawings, require descriptive words and notes in order that they can be clearly understood.
Therefore, it is important for the draughtsman, to aquire as quickly as possible the habit of using good lettering on all his work.

And as the study of lettering also affords excellent practice in drawing, it is particularly suitable that it should be dealt with at an earlystage in the training.

PRINCIPLE of LETTERING

3.1 Principle of lettering:

1. Legibility
   depends on
   - a shape or form of each individual letter
   - b spacing of letters and arrangement of words
   - c the size and positions of the lettering according to relative importance.

2. Suitability
   of shape to materials and method of execution, thus, lettering drawn in pencil on paper will differ in form to some extent from lettering incised in stone.

3. The Character
   must be appropriate to its purpose. The type of letters and general composition of the wording should be expressive of the quality or use of the drawing, e.g. decorative lettering is completely out of place on a working drawing, just as crude stencil lettering would be on a highly finished perspective drawing.

FREEHAND LETTERING

3.2 FREEHAND LETTERING

Absolutely sufficient for Architectural Drawings are 'block letters' with simple, vertical letters, represented with straight lines, circles or parts of circles. Important are the proportions of the letters which are described in the following scheme.

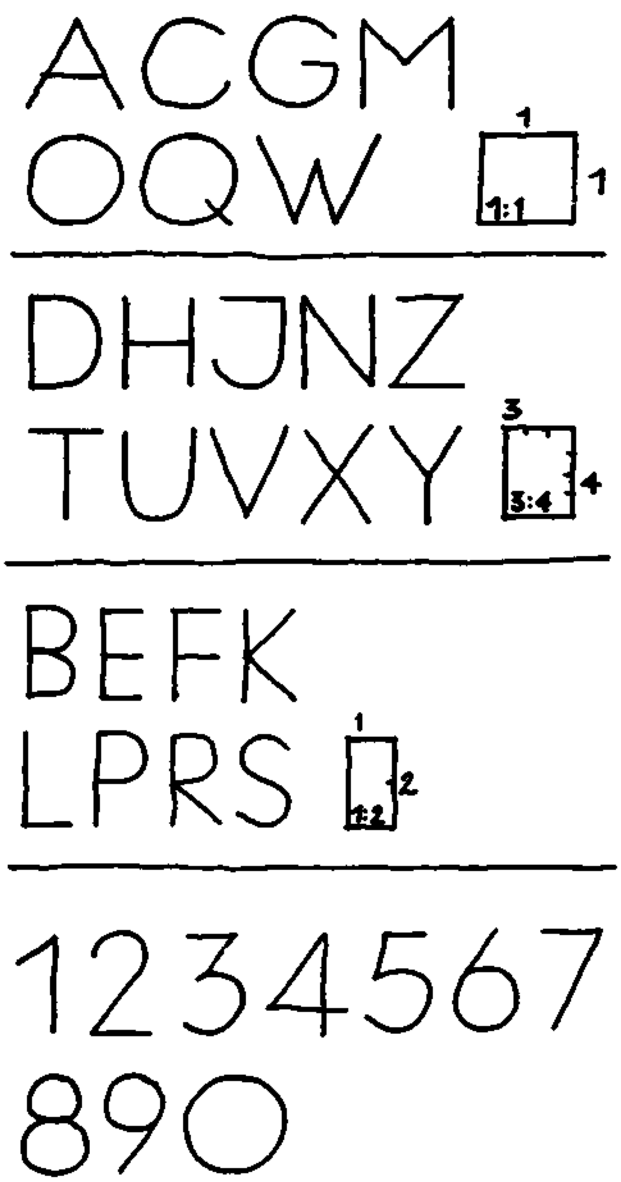

In the following please find som explations how to draw or to write capital block letters:

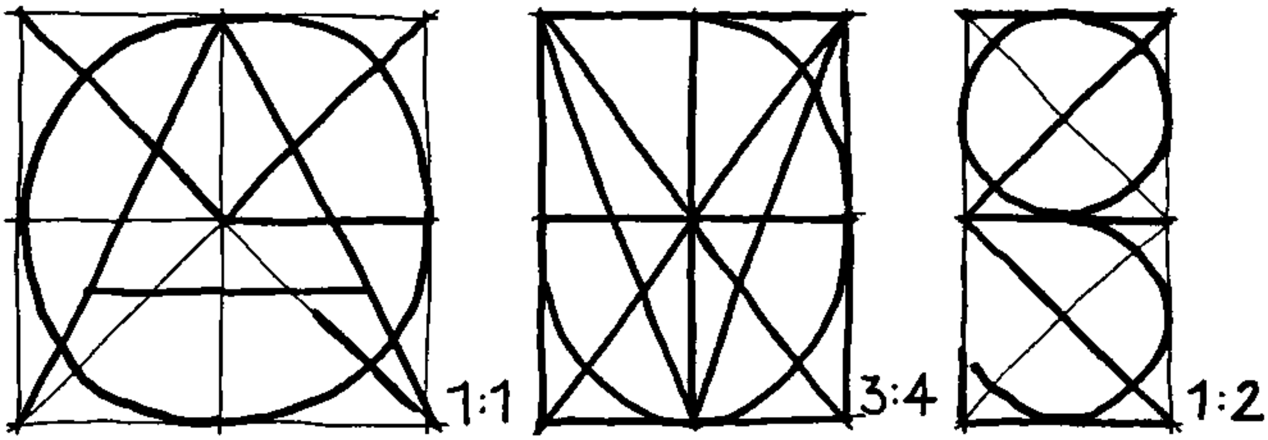

A take the area of a square. The horizontal stroke should be in the lower third. Other forms look too wide or too thin.

B Should be inwritten into two squares, which are on top of each other. The roundings are parts of a circle.

C consists of a three quater (3/4) part of a circle

D has to be drawn in a full semi-circle

E again should be in written into two squares, which are on top of each other.

F is equal to E, without the horizontal bottom stroke. Both remains horizontal stroke should have the same length.

G has almost the shape of a circle. The horizontal stroke has to be drawn from the centre of the circle to the external line on the right hand side.

H is in-written in a rectangle with the proportions of 3:4. The horizontal line should be drawn right in the centre.

I is only a vertical line without any additions.

J is again in-written in a rectangle with the proportions of 3:4. The lower rounding consists almost of a semicircle.

K fits in an area of 2 squares, one on top of each other. The inclined strokes are drawn from the centre to the top and the bottom under 45^0.

L this horizontal stroke is half as long as the vertical line

M takes again the area of a square. It has to be taken care, that the lines at the left and the right are exactly vertical.

N is to be in-written in a rectangle with proportion of 3:4 three to four.

O has to be drawn as a full circle not oval or in the form of an ellipse.

P has a proportion of two to one, the upper part is drawn as a semi-circle with horizontal parts at the top and the centre of the vertical line.

Q is written like an O the inclined stroke has to be added under 45^0 in the right hand bottom corner.

R is similar to P from the centre of the letter an inclined stroke under 45^0 has to be added.

S is a difficult letter. It may help you to draw it, if you imagine that S is constructed out of two circles, one on top of each other, and which lines are not completely closed.

T fits in a rectangle with the proportion three to four.

U consists of a semi-circle at the bottom, the two ends extend in vertical lines.

V again fits in a rectangle with proportions three to four.

W draw V twice next to each other, fitting in a square.

X all have to be drawn in a rectangle
Y with proportions of three to four.
Z

AD I compiled : D. VOLKE JUNE '83	LETTERING	ARCH. DRWNG. LECTURE CET 1o43/13.2 19
TCA TECHNICAL COLLEGE ARUSHA CHUO CHA UFUNDI ARUSHA	CIVIL ENGINEER. DEPARTMENT	19

FREEHAND

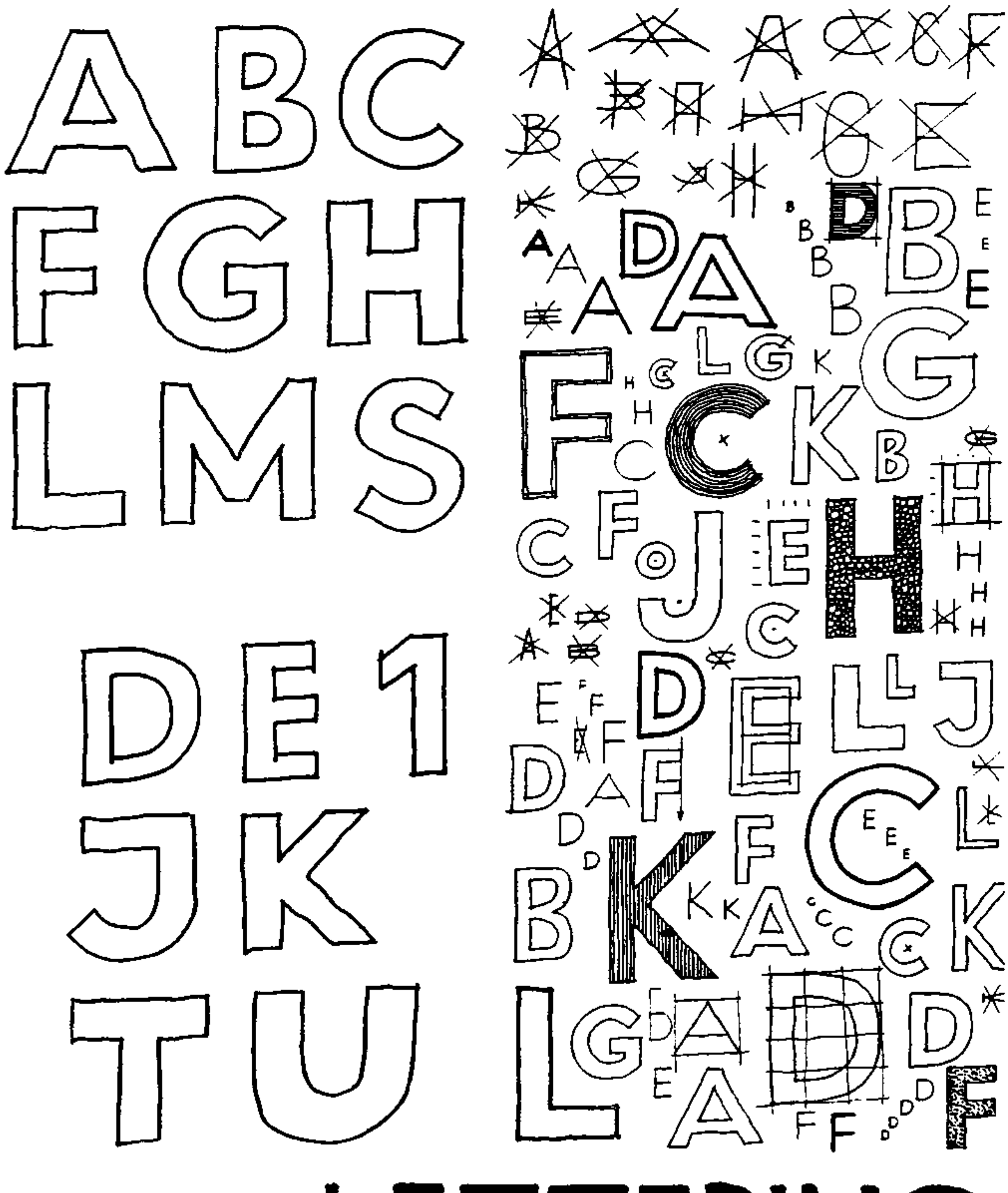

LETTERING

AD I compiled : D.VOLKE JUNE '83	LETTERING	ARCH. DRWNG. LECTURE CET 1o43/1 3.2 2o
TCA TECHNICAL COLLEGE ARUSHA CHUO CHA UFUNDI ARUSHA	CIVIL ENGINEER. DEPARTMENT	2o

Writing numerals we have to follow the same rules, their elements are straight lines, circles and parts of circles.

1 The small inclined stroke should never be horizontal, otherwise it could be mixed up with 7.

2 Is in the upper part a semi-circle which continues as a inclined line under 45^{o} downwards.

3 Is only in the lower part a semi-circle the upper parts consists of an inclined stroke under 45^{o} with a horizontal stroke on top.

4 ends at the top as a triangle

5 the upper stroke on the left hand side has to be drawn exactly vertical, other wise it might be mixed up with 3

6 should be drawn as full circles with
+ an tangential inclined stroke under
9 45^{o} up or downwards.

7 it is advisable to draw a short horizontal stroke crossing the inclined line at the centre, in order to avoid a confusion with 3.

8 consists of 2 full circles, one on top of each other

TYPES OF LETTERS

3.3 TYPES OF LETTERS

Writing is a sort of 'language of sings' and it serves the purpose of fixing informations. About 5000 years ago people in China, Mesopotania and Egypt have started to write down their informations. As letters, they used signs and symbols. Later on these sings and symbols have been changed to letters and numerals of different types and even the types of letters and numerals have been modified up to the present day.

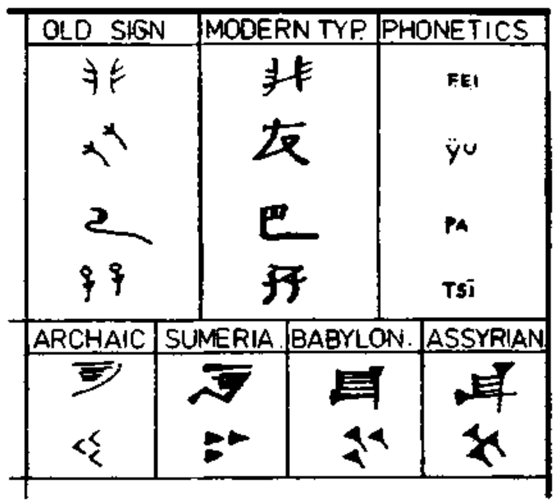

ROMAN

3.3.1 THE ROMAN ALPHABET

In architectural drawings the historical types of letters should not be used except for special purposes, e.g. as decorative lettering in perspective drawings or for titeling in stock-taking drawings of historical buildings. However, there is one alphabet in the history which should be studied carefully. Our modern lettering is derived from that of the ROMANS, and the generally accept as standard is the lettering which was carved on Trajan's Column, Rome, in the second century. A.D. The forms of these letters have now become familar in printing types and flat letters, and the Roman alphabet will always be the basis of good lettering.

The construction of each letter is shown and should be understood:

Practicing capital block lettering, always try avoid inclined letters or unnecessary decorations. The same passes for the numerals.

STAGES IN SETTING UP

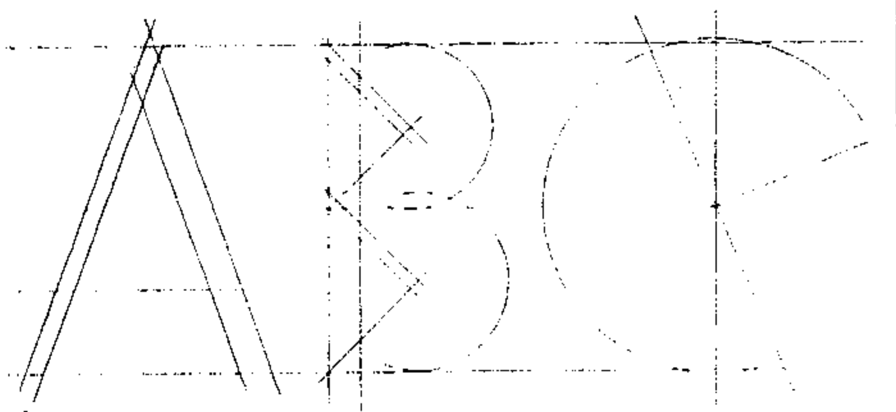

1.

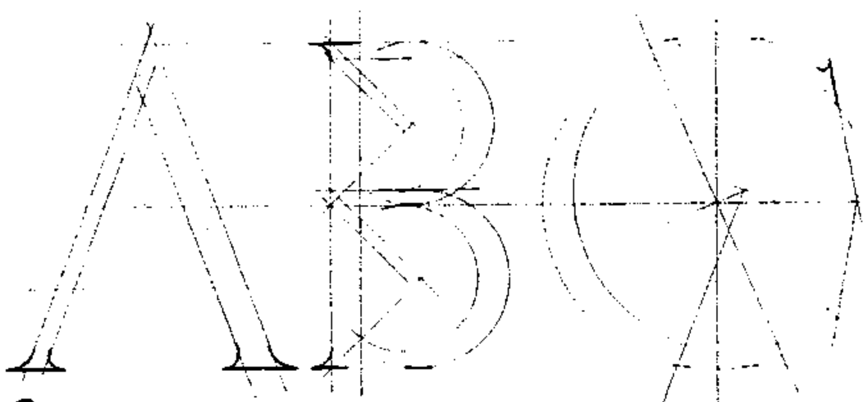

2.

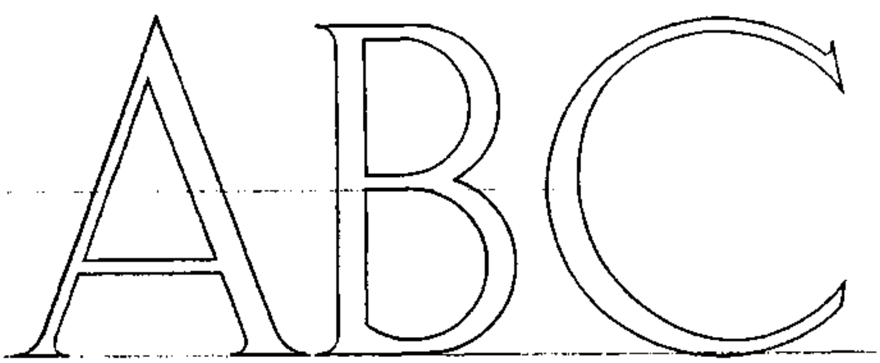

3.

ROMAN LETTERS

AD I	LETTERING	ARCH. DRWNG.
compiled : D. VOLKE		LECTURE
JUNE '83		CET 1o43/13.322

TCA TECHNICAL COLLEGE ARUSHA
CHUO CHA UFUNDI ARUSHA

CIVIL ENGINEER.
DEPARTMENT

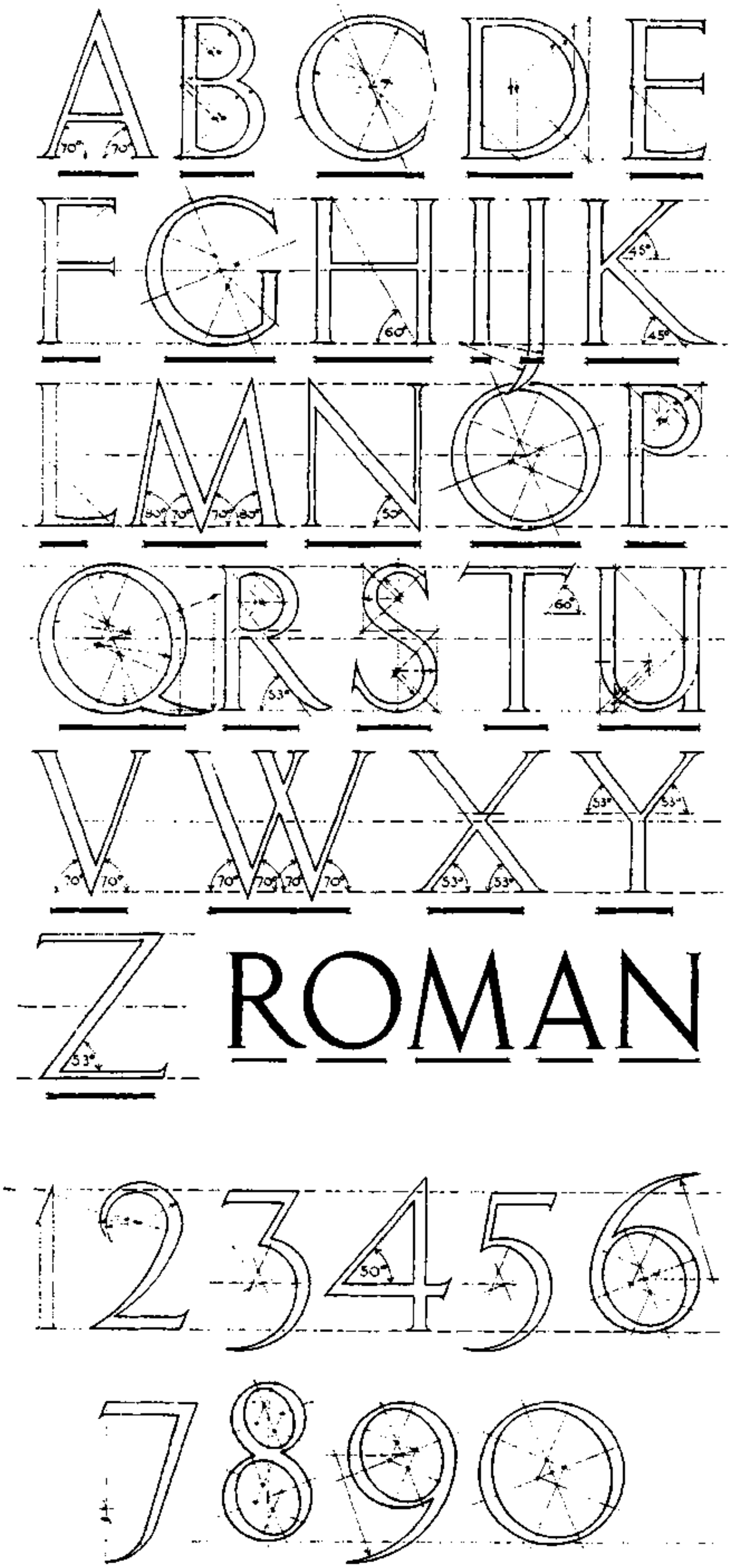

AD I	LETTERING	ARCH. DRWNG.
compiled : D.VOLKE		LECTURE
JUNE '83		CET 1o43/13.323
TCA TECHNICAL COLLEGE ARUSHA CHUO CHA UFUNDI ARUSHA	CIVIL ENGINEER. DEPARTMENT	23

3.3.2 SANS SERIF LETTERS

In more recent times, letters without serifs, known as 'sans serif alphabets' have been designed and are much used because of their simplicity, clarity and ease of execution. The fig. shows the setting-out of such an alphabet, suitable for the titling of drawings, etc.

3.3.3 INCLINED LETTERING

Sometimes it is necessary to distinguish between two types of lettering, e.g. names of rooms on plan and notes regarding construction. While this might be effected by variations in size, it may be more convenient to use upright lettering for the one and inclined lettering for the other.

The fig. shows inclined lettering sloping uniformly at an angle of about 75 degrees. The slope should not be exaggerated.

3.3.4 SCRIPT LETTERING

The figure shows individually formed capitals, numerals and lower case letters which can be written in pencil or pen. If well executed it is an attractive way of labelling certain types of project presentation drawings.

3.3.5 STENCIL LETTERING

Stencil letters can be used for titling drawings and are a means of achieving uniformity at negligible cost when a number of drawings are similarly titled. The fig. shows an example and how a stencil is used. Special stencil ink can be used or indian ink or opaque colour, etc. The brush must be almost dry, and the plate must be held down perfectly flat and firmly for good results. The description 'stencil lettering' is also commonly applied to guided pen lettering.

3.3.6 GUIDED PEN LETTERING

The figure shows examples of the leters produced by means of special pens and guides. Such lettering is used extenslively for drawings of all kinds, particularly working drawings and details. Its popularity is due to its legibility, speed of execution, and the uniformity which it gives, especially when different draughtsmen are working on the same set of drawings.

Both upright and sloping guides are obtainable for capital, lower-case letters, and numerals in a variety of sizes with corresponding pens. Also drawing pens like 'graphos' or 'rapidographs' can be used.

Used carelessly, this lettering is as bad as the worst freehand and a certain amount of practice is necessary to obtain lettering which is pleasing in appearance as well as very legible.

A few hints are
1) only a small quantity of ink should be put in the pen,
2) keep the pen perfectly upright in use,
3) wash the pen out immediately after use and see that the wire is pushed well home
4) keep the guides clean, do not let the ink clog the letters. A special cleaning liquid can be obtained for pens and guides.

Always rule faint guide-lines for letters and consider the spacing before starting. Sometimes it may be advisable to make a trial setting-out.

AD I compiled : D. VOLKE JUNE '83	LETTERING	ARCH. DRWNG. LECTURE CET 1o43/13.325
TCA TECHNICAL COLLEGE ARUSHA CHUO CHA UFUNDI ARUSHA	CIVIL ENGINEER. DEPARTMENT	25

ABCDEFGHIJKLMNOPQ
RSTUVWXYZ 1234567890

INCLINED LETTERING

ABCDEFGHIJKLMNOPQ
RSTUVWXYZ 1234567890
abcdefghijklmnopqrstuvwxyz

ABCDEFGHIJKLMNOPQ
RSTUVWXYZ 1234567890
abcdefghijklmnopqrstuvwxyz

SCRIPT LETTERING

NOTES

GENERAL NOTES SHOULD NOT BE SCATTERED OVER THE DRAWING BUT SHOULD BE NEATLY ARRANGED IN PANELS OF REGULAR SHAPE

THEY SHOULD BE BROKEN INTO PARAGRAPHS FOR EASE IN READING

THE LETTERS AND WORDS SHOULD NOT BE CRAMPED NOR SO W I D E L Y SPACED AS TO BECOME ILLEGIBLE

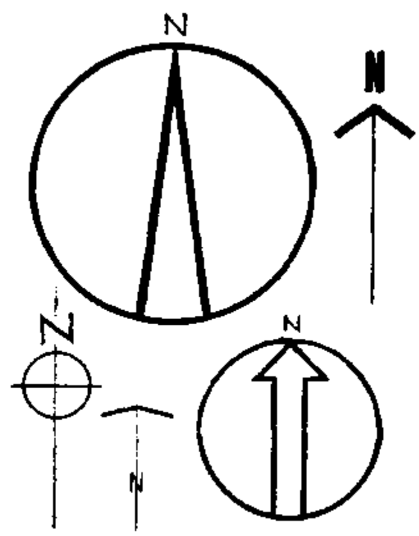

TYPICAL NORTH POINTS

AD I compiled : D.VOLKE JUNE '83	LETTERING	ARCH. DRWNG. LECTURE CET 1o43/13.326
TCA TECHNICAL COLLEGE ARUSHA CHUO CHA UFUNDI ARUSHA	CIVIL ENGINEER. DEPARTMENT	26

ABCDEFGHIJKLM
NOPQRSTUVWXYZ
1234567890№&

ABCDEFGHIJKLM
NOPQRSTUVWXYZ
1234567890 №&

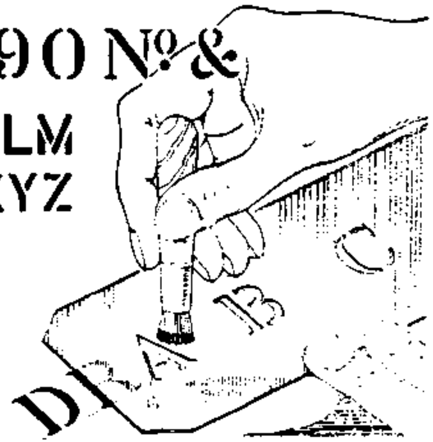

STENCIL LETTERING

ABCDEFGHIJKLMN
OPQRSTUVWXYZ
1234567890No/&

abcdefqhijklm
nopqrstuvwxyz
1234567890No

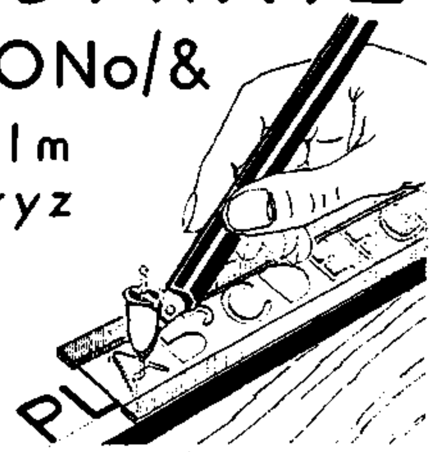

GUIDED PEN LETTERING

A A A B C D D E E E E E
1 1 1 2 2 3 3 4 4 5 5 6 6 7
ELEVATION SECTION BASEMENT
A-A B-B C-C D-D

******
guide line

AAAABBCCDDDE
AAAABBCCDDDE
AAAABBCCDDDE
AAAABBCCDDDE
IIIIJKLLLL

PRESSURE TRANSFER LETT.

AD I compiled : D.VOLKE JUNE '83	LETTERING	ARCH. DRWNG. LECTURE CET 1o43/13.327
TCA TECHNICAL COLLEGE ARUSHA CHUO CHA UFUNDI ARUSHA	CIVIL ENGINEER. DEPARTMENT	27

3.3.7 PRESSURE-TRANSFER LETTERING

This kind of lettering, also known as pressure sensitive, is extensively used on all kinds of architectural and planning drawings, particularly for titling and labelling. It is reasonably quick and most effective. It's only serious disadvantage is that it is rather expensive, especially as many letters of each sheet are never used.

The letters are printed on thin plastic sheets, usually 254 mm x 381 mm, although smaller sheets are available, in a variety of types of alphabets, numerals, punctuations, etc. and are protected by silicon-treated backing sheets. A typical example is illustrated. The characters can be applied to any smooth dry surface in any desired arrangement. Having decided on the type and size of letters to be used and estimated the placing on the drawing - this requires some experience - the technique of application is to remove the backing sheet and to position the first letter, on a previously ruled guide line if there are to be a series of letters, and then to shade across the letter from top to bottom using a ball-point pen with moderate pressure. This action is continued until the letter appears lighter, which shows that it has been transferred to the surface of the paper. The lettering film is carefully peeled back until the letter is exposed, it is then moved to position the next letter and the transfer procedure is repeated. On completion of a word, or every few letters, even after each letter of the larger sizes, the backing sheet should be laid over and additional firm pressure applied by the finger or the edge of a scale in order to obtain maximum adhesion. When application is made to tracing paper or film from which dyeline prints are to be obtained it may be necessary to spray the letters with a matt fixative or they will be damaged in the printing process. As the spray will also 'fix' any parts of the drawing on which it may fall, it is advisable to vonfine the area by masking.

Points continually to be kept in mind are: avoid accidentally pressing any other letter when making a transfer; keep sheets flat and unfolded and uncreased in a box, wallet or stout envelope away from excessive heat or humidity when not in use. However, the accidental transfer of a letter to drawing or tracing materials is not usually a serious matter as it can be removed by scraping gently with a razor blade. Incomplete letters can be patched by applying part of another letter or can be made good in indian ink.

Complete words such as PLAN, ELEVATION, EAST, WEST etc. at a size suitable for the majority of production drawings, are available, as are N points, direction arrows, section lines, electrical symbols and other useful architectural characters.

4. LINEWORK and DIMENSIONING

4. LINEWORK AND DIMENSIONING

4.1 Types of Lines
In architectural drawings five different types of lines are broadly used:
1. continuous lines
2. broken lines
3. broken and dotted lines
4. dotted lines and
5. freehand lines

The thickness of these lines is due to their functions in the drawing as well as to their scale and their is classified into
- thick lines
- medium lines and
- thin lines

The following schedule shows type and thickness of lines as well as their use in architectural drawings.
PROPORTION of thickness:

thick	medium	thin
2	1	0,7

Practice the exercises shown in the following as PENCIL drawings with a thickness of lines from 0,18 mm to 1,4 mm for CONTINUOUS lines as well as for BROKEN and DOTTED lines.
Also, the correct and neat drawing of lines meeting or crossing under right or inclined angles should be practiced.

4.2 Pencil drawing
- Use pencils of 2 H to 4 H
- For thicknesses from 0.18 to 0.5mm ONE line is sufficient
  For thicknesses from 0.7 to 1.4 mm (or thicker) a DOUBLE line with the required distance has to be drawn, which has to be filled in afterwards.
- All corners and crossings of lines have to be drawn very exactly.
- It is important to take care that the thickness of the line is INCLUDED with the area of the drawn figure, so that the drawn EXTERNAL dimension is equal to the REQUIRED measurement.
- Draw with the pencil as close as possible along the T- or set-square under an inclination of about 60°

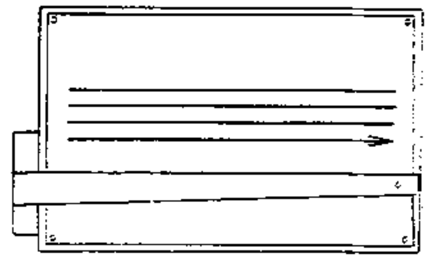

1. HORIZONTAL

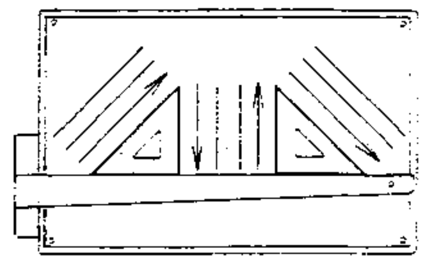

2. VERTICAL AND 45°

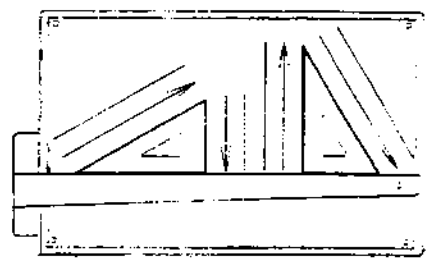

3. VERTICAL, 30° AND 60°

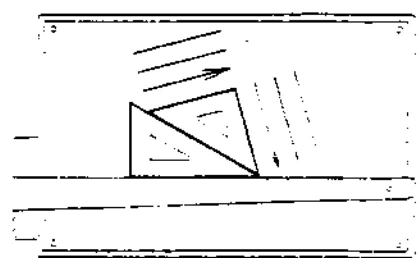

4. 15° AND 75°

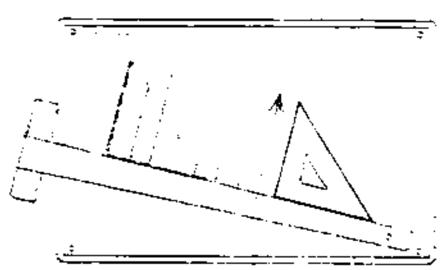

5. PARALLEL TO ANY GIVEN LINE

	TYPE OF LINES			USE
A	CONTINUOUS THICK		1.0 mm 0.7 mm	VISIBLE LINES DETERMINATION OF CUT BUILD. MEMBERS, WALLS ≥ 15 cm, CONCRETE, etc.
B	CONTINUOUS MEDIUM		0.5 mm 0.35 mm	VISIBLE LINES DETERMINATION OF ELE- VATIONS OF WALLS AND OTHER BUILD MEMBERS
C	CONTINUOUS THIN		0.25 mm 0.18 mm	DIMENSION AND HATCHING LINES
D	BROKEN and DOTTED THICK		1.0 mm 0.7 mm	SECTION PLANES
E	BROKEN and DOTTED MEDIUM		0.5 mm 0.35 mm	CENTRE LINES, AXES, etc. (big scale)
F	BROKEN and DOTTED THIN		0.25 mm 0.18 mm	CENTRE LINES AXES, etc. (small scale)
G	BROKEN MEDIUM		0.5 mm 0.35mm	HIDDEN OR OVERHEAD ELEVATION LINES, PROPOSED ADDITIONS AND ALTERATIONS
H	BROKEN THIN		0.25mm 0.18 mm	SCREEN OR RASTER LINES
I	DOTTED		0.35mm 0.25mm	PARTS TO BE DEMOLISHED, MINOR BUILD MEMBERS
J			0.35mm 0.25mm	ROLLED STEEL JOISTS PIPELINES etc.
K			0.35mm	BREAKLINE

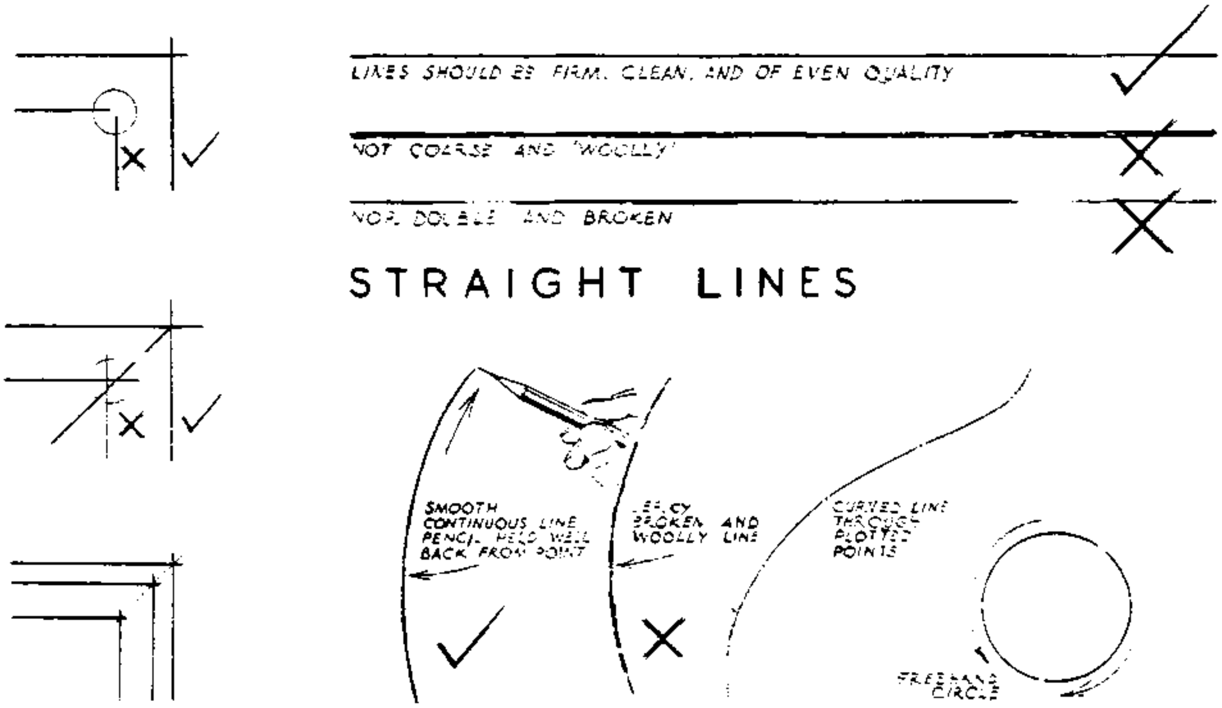

FREEHAND CURVES

- In order to keep the drawing CLEAN:
. Use clean equipment and good pencils
. keep hands clean and touch the paper with your fingers as little as possible
. avoid unnecessary rubbing
. sharpen pencils away from the drawing board or table
. make any erasures carefully and remove all rubber crumbs
. if much drawing is to be done on several small areas of the sheet, cover the whole of it with tracing paper in which suitable'flap windows' through which to work can be cut

4.3. Inking - In

Follow a certain sequency in the procedure of INKING-IN of a drawing. Ink-in:
1. All centre lines
2. All circles and arcs
3. All horizontal lines
4. All vertical and inclined lines
5. Hatchings and black-in sectional parts
6. All dimension lines, freehand lines, arrows and arrowheads
7. Lettering, dimension figures, notes
8. Titles etc.

PLAN OF A BUILDING

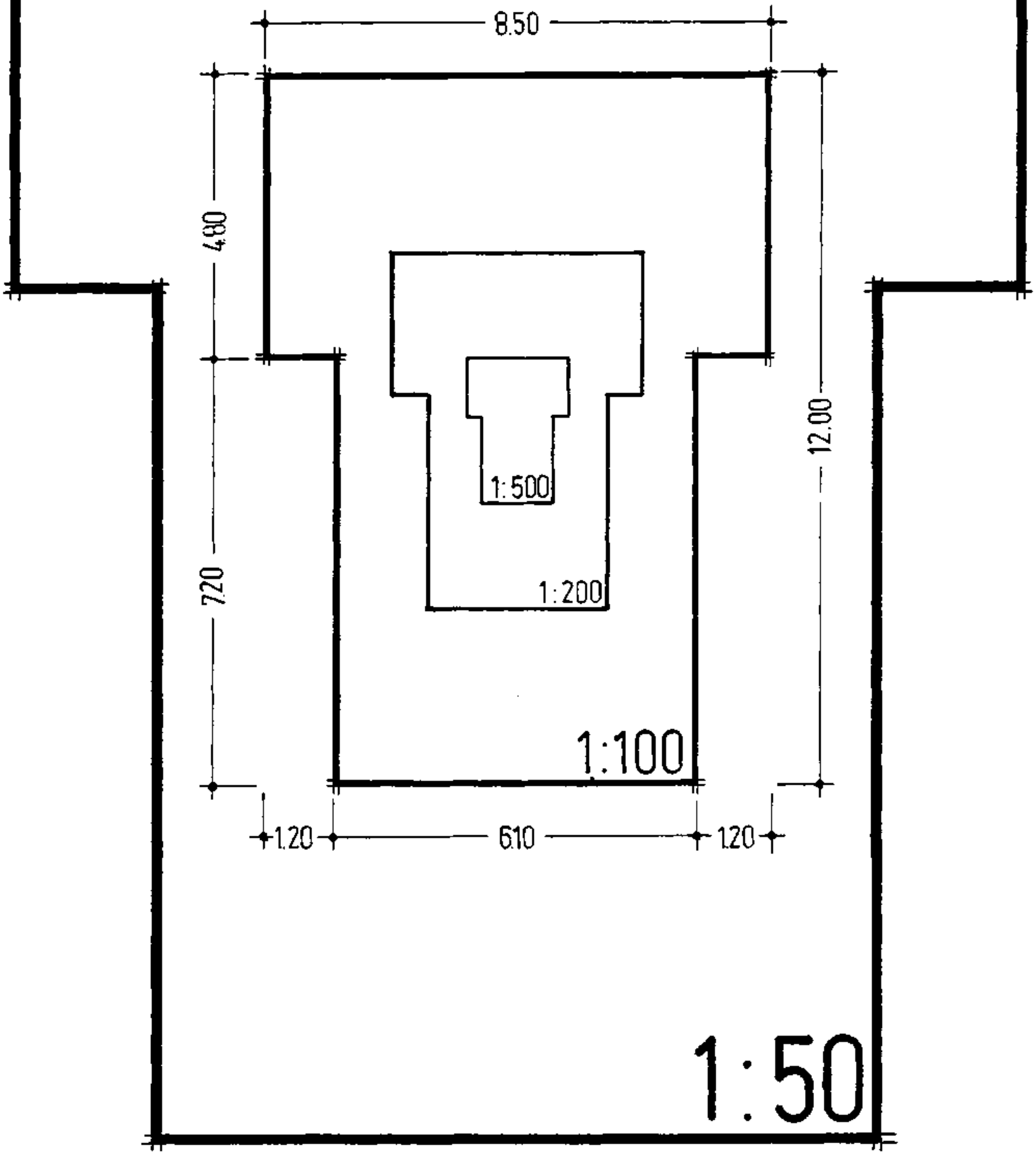

AD I compiled : D.VOLKE JUNE '83	EXERCISE	ARCH. DRWNG. LECTURE CET 1o43/14.332
TCA TECHNICAL COLLEGE ARUSHA CHUO CHA UFUNDI ARUSHA	CIVIL ENGINEER. DEPARTMENT	32

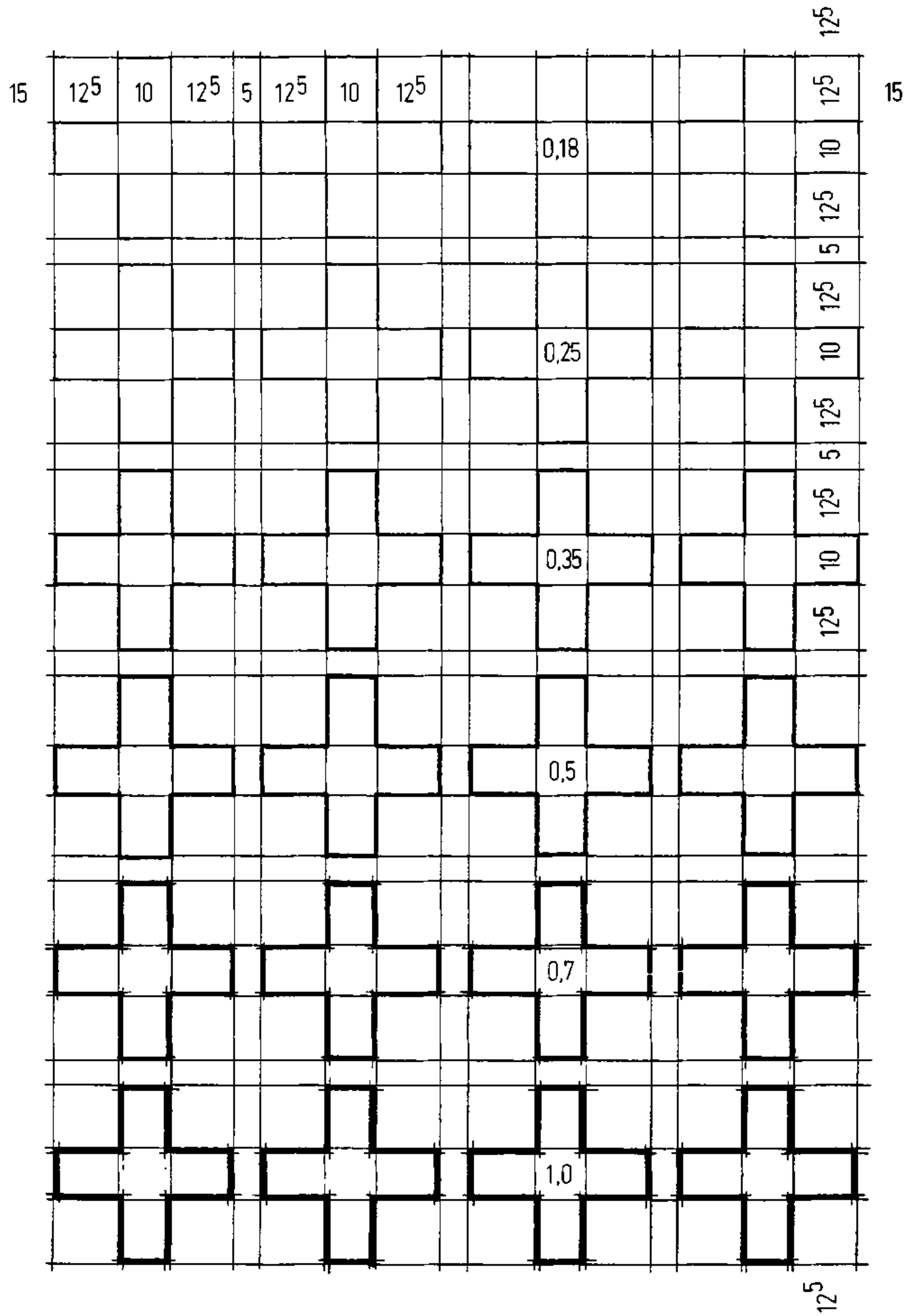

AD I compiled: D. VOLKE JUNE '83	EXERCISE	ARCH. DRWNG. LECTURE CET 1o43/14.333

TCA TECHNICAL COLLEGE ARUSHA
CHUO CHA UFUNDI ARUSHA

CIVIL ENGINEER. DEPARTMENT

EXERCISE

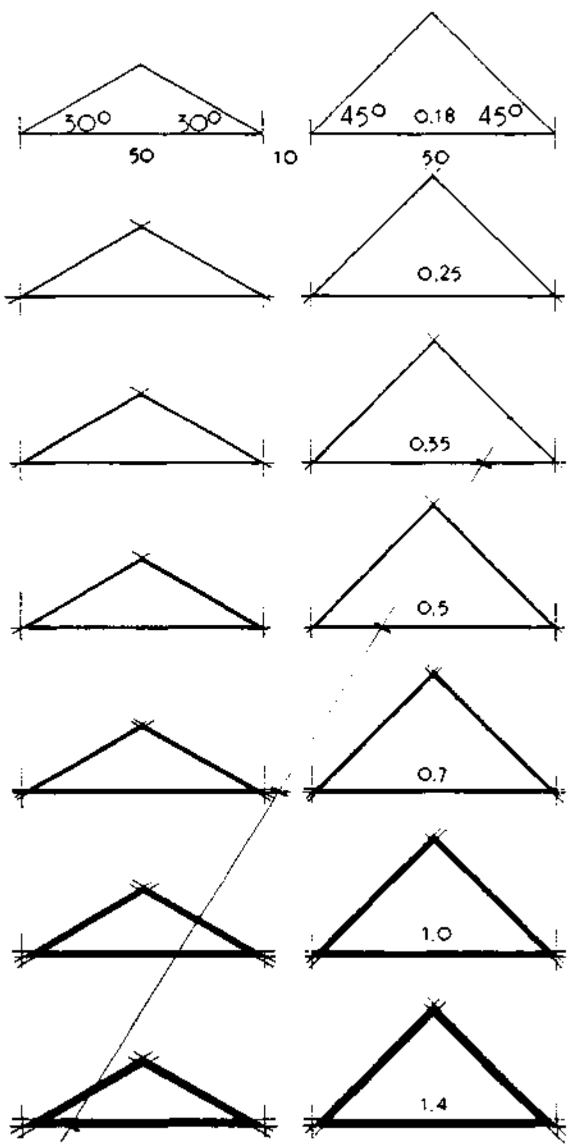

4.4 Basic Rules of Dimensioning

- The METHOD of dimensioning is due to the type of the drawing (Sketch-, design-, working-, detail drawing etc)
- All for clarification of that particular drawing required measurements have to be indicated
- In FLOOR PLANS there are three main types of dimensionings:
  1. Dimensioning of openings, columns and piers,
  2. Dimensioning of axes of openings
  3. Dimensioning with coardinates
- Different alternative DETERMINATIONS of dimension lines are indicated in the figure

4.4.1 Types of Dimensions

- OVERALL DIMENSIONS indicate the overall LENGTH, WIDTH and HEIGHT. Each object has three overall dimensions.
- DETAIL DIMENSIONS indicate the size of each part or detail of the object

NOTE: dimension lines and extension lines (they indicate the limits of a dimension and extend this dimension to a convenient place on the drawing) should never cross!

Therefore the smallest dimension lines are placed nearest to the view.
Overall dimensions are drawn outside the detail dimensions.

4.4.2 Placement of Dimensions

- There are plenty of rules concerning the dimensioning of crawings, and some of them are contradictory. In case two rules conflict, choose the most logical and practical solution.
- Dimensions should be placed so that they can be read from the bottom-side or from the righthand-side of the drawing.
- Normally dimensions should be placed OUTSIDE the outer lines of the views, close to the contour. The should be placed INSIDE, if this could avoid long extension lines.
- Place dimensions in the way they are likely to be measured during the construction work.
- Place dimension lines in line
- For dimensioning CIRCLES or PARTS of CIRCLES refer to the figure.

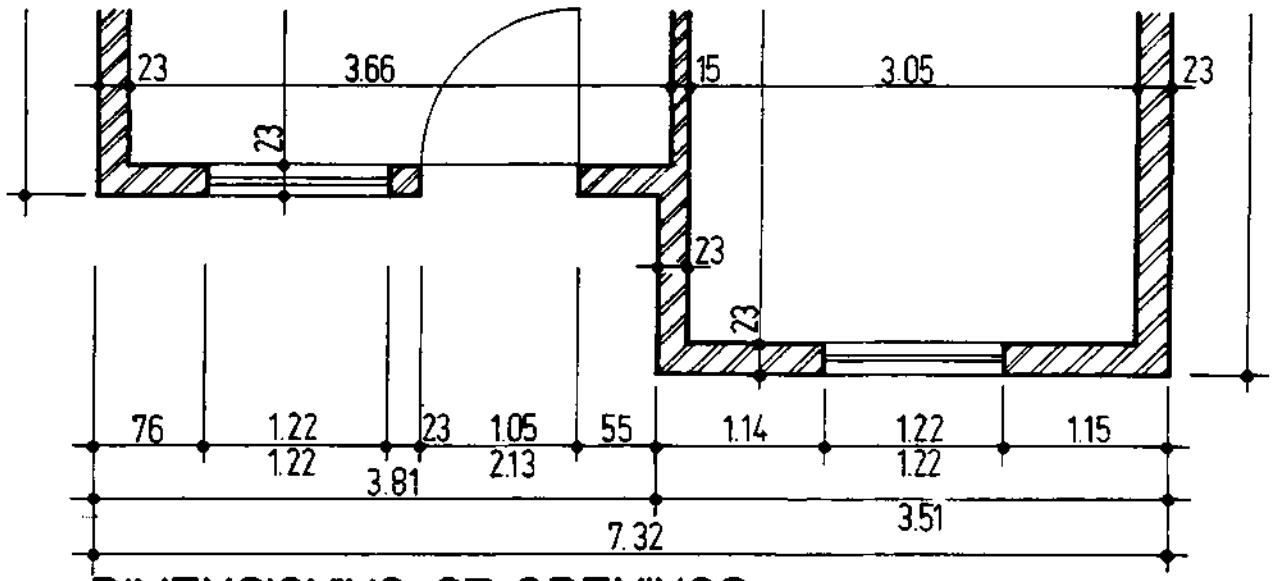

DIMENSIONING OF OPENINGS

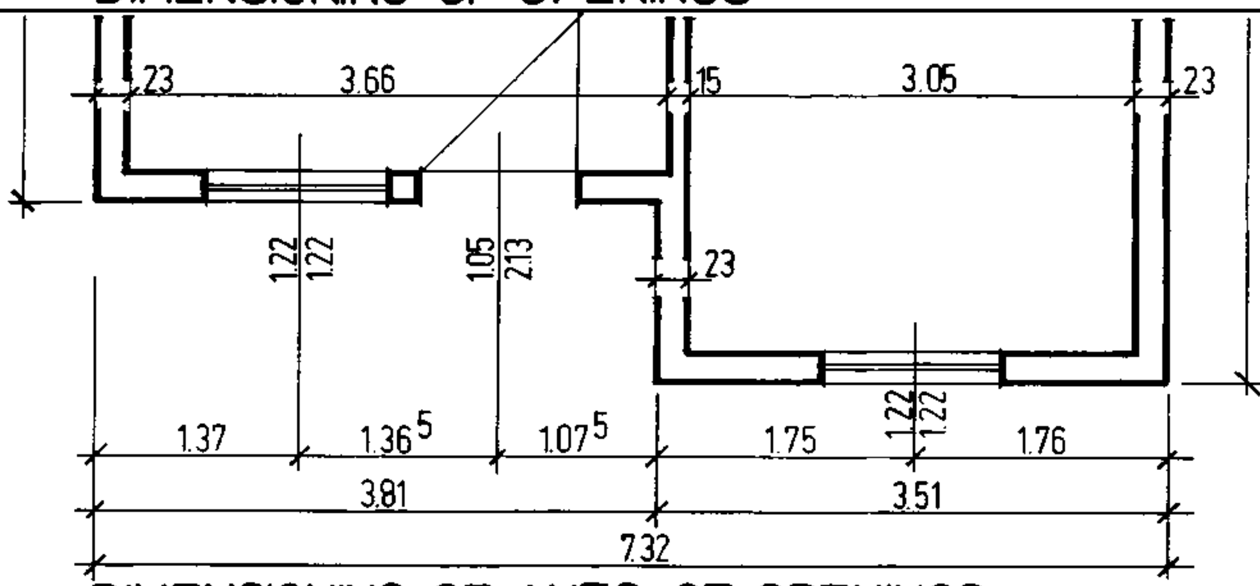

DIMENSIONING OF AXES OF OPENINGS

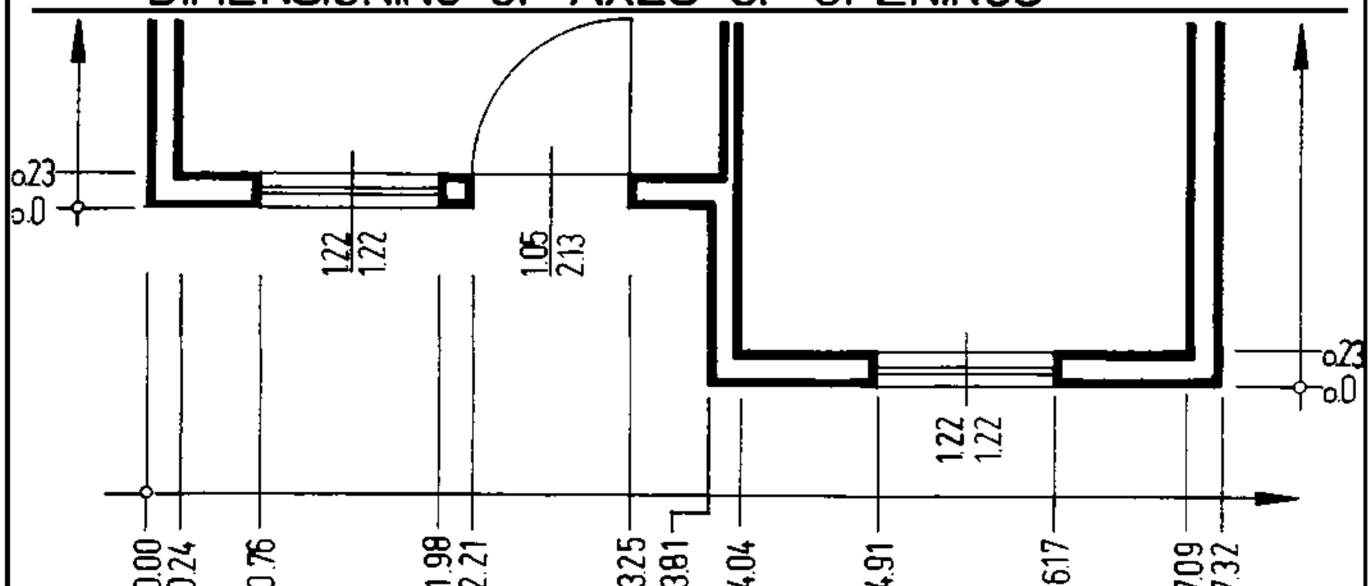

DIMENSIONING WITH COORDINATES

AD I	LINEWORK	ARCH. DRWNG.
compiled : D.VOLKE		LECTURE
JUNE '83		CET 1o43/14.435

TCA TECHNICAL COLLEGE ARUSHA
CHUO CHA UFUNDI ARUSHA

CIVIL ENGINEER. DEPARTMENT

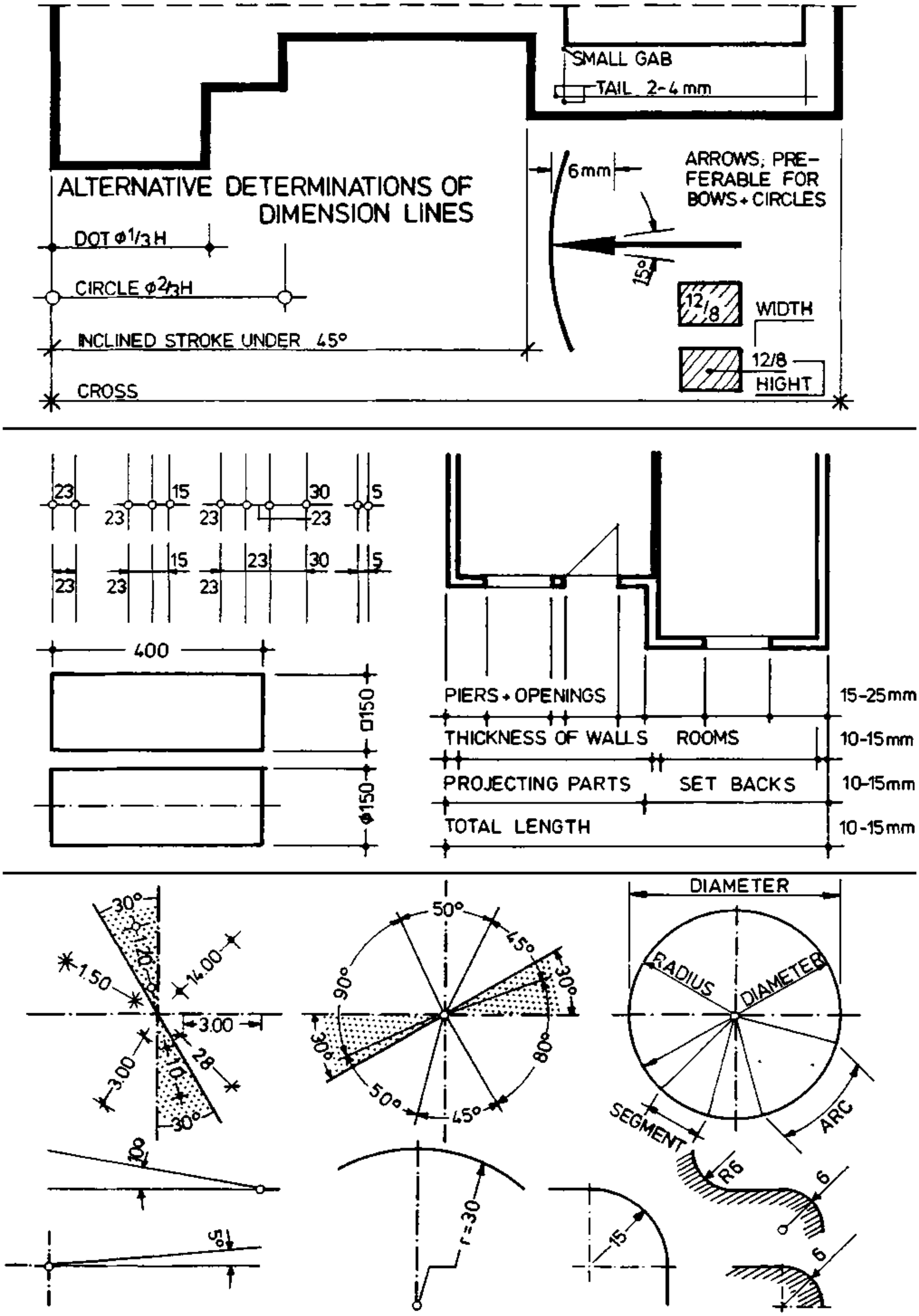

AD I	LINEWORK	ARCH. DRWNG.
compiled : D.VOLKE		LECTURE
JUNE '83		CET 1o43/14.436

TCA	TECHNICAL COLLEGE ARUSHA CHUO CHA UFUNDI ARUSHA	CIVIL ENGINEER. DEPARTMENT	36

5.ENLARGEMENT & .REDUCTION

5. ENLARGEMENT AND REDUCTION OF LINE DRAWINGS

There are various methods of enlarging or reducing a line drawing. Some of the most useful are:
The drawing in the figure consists of irregular or complex lines, draw over it a square grid of light lines (or, if the drawing is to be protected, draw the grid on a piece of tracing paper and place over the original), and then for the new drawing make a similar grid but proportionately larger or smaller as required.With this grid as a guide it is comparatively easy to make the copy to the size wanted.

If a line and its divisions, e.g. a scale, is to be enlarged or reduced in other than a simple mathematical proportion this is a useful method to employ. Line AB with points C and D along it is to be reduced; with centres A and B and radius equal to AB two arcs are drawn to intersect at O, and lines are drawn from O to A,B,C and D. The new length of the line is now measured along OA from O, and a line A'B' is drawn parallel to AB to which it corresponds. Where this line cuts CO and DO points C' and D' corresponding to C and D on the original are found.

The proportinal enlargement or reduction of rectangles is made by drawing a diagonal so that the alteration of the length of one side automatically gives the required length of the adjacent one. Example: ABCD is the rectangle, BD is a diagonal EFGD is a proportionately reduced rectangle.

Proportional Compasses. These instruments consist of two slotted pieces of metal with points at each end joined by a centre screw, which can be so set that the distance between the long points is equal to that between the short points or is two, three, four or more times that distance up to ten.
They can therefore be used for enlarging or reducing simple drawings in such ratios, although they seem to find little favour with present-day draughtsmen.

Pantograph: an instrument for enlarging or reducing drawings in various ratios. By following the lines of the original with one marker, the other traces them to a larger or smaller scale, as the case may be, and in the proportionate ratio to which the instrument has been set. The illustration shows a simple type. The Eidograph is a somewhat similar instrument, but having only one point of support, is steadier in action. The cost of these instruments is only justified if dealing with a large number of town plans and surveys.

Two other methods are commonly used and they are known as
- OFFSET METHOD and
- RADIAL PROJECTION

For their construction method refer to the drawing.

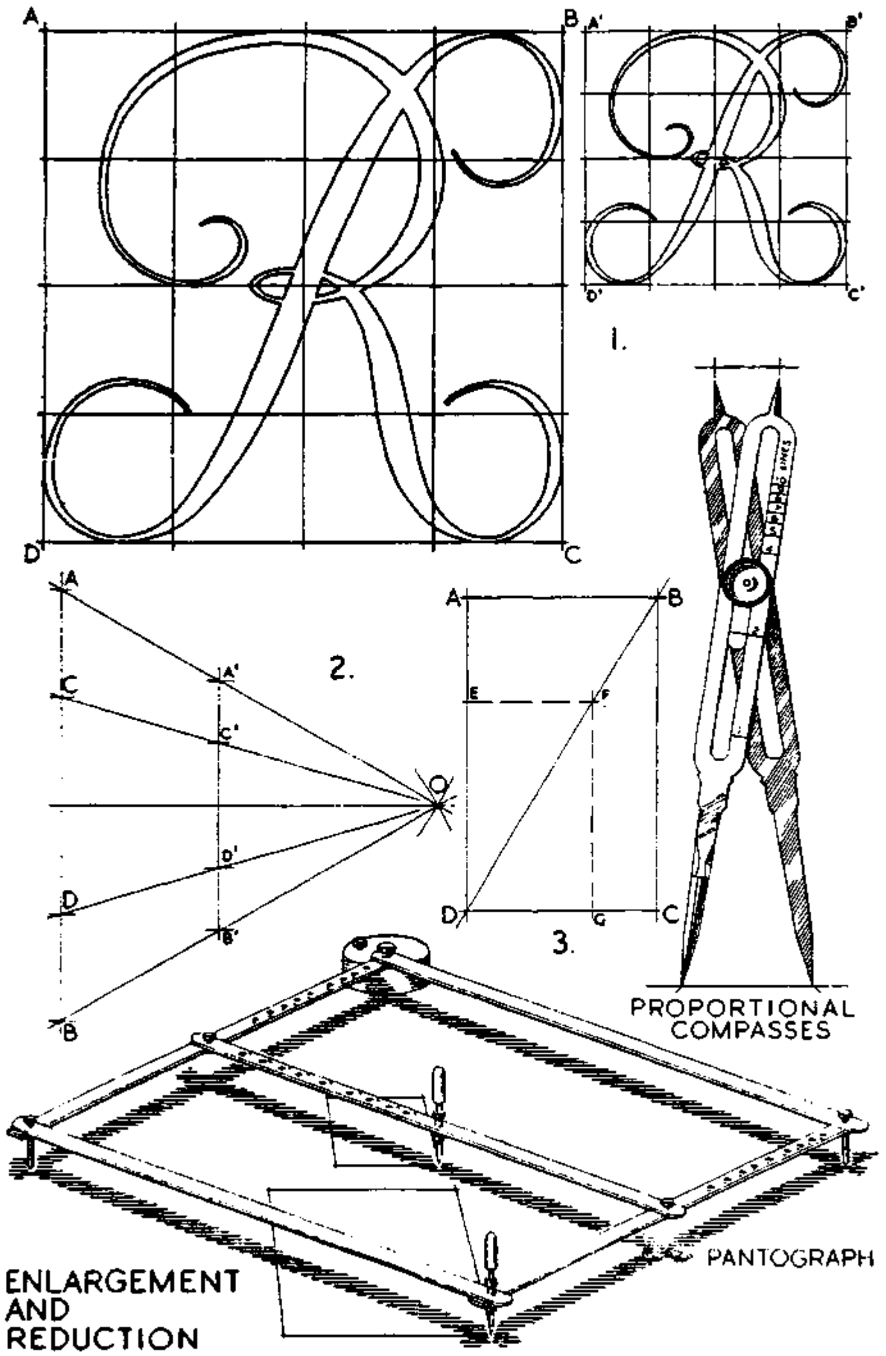

AD I compiled : D.VOLKE JUNE '83	ENLARGEMENT	ARCH. DRWNG. LECTURE CET 1o43/1538
TCA TECHNICAL COLLEGE ARUSHA CHUO CHA UFUNDI ARUSHA	CIVIL ENGINEER. DEPARTMENT	38

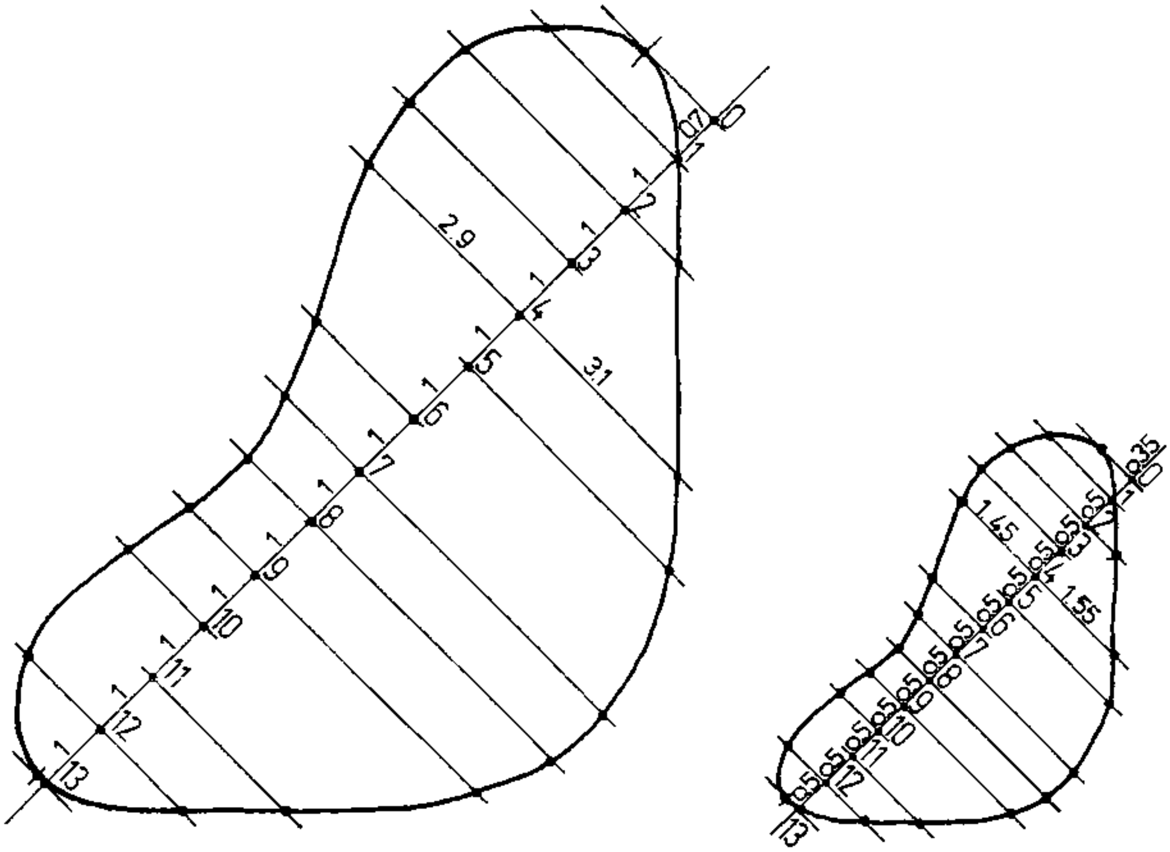

OFFSET-METHODS

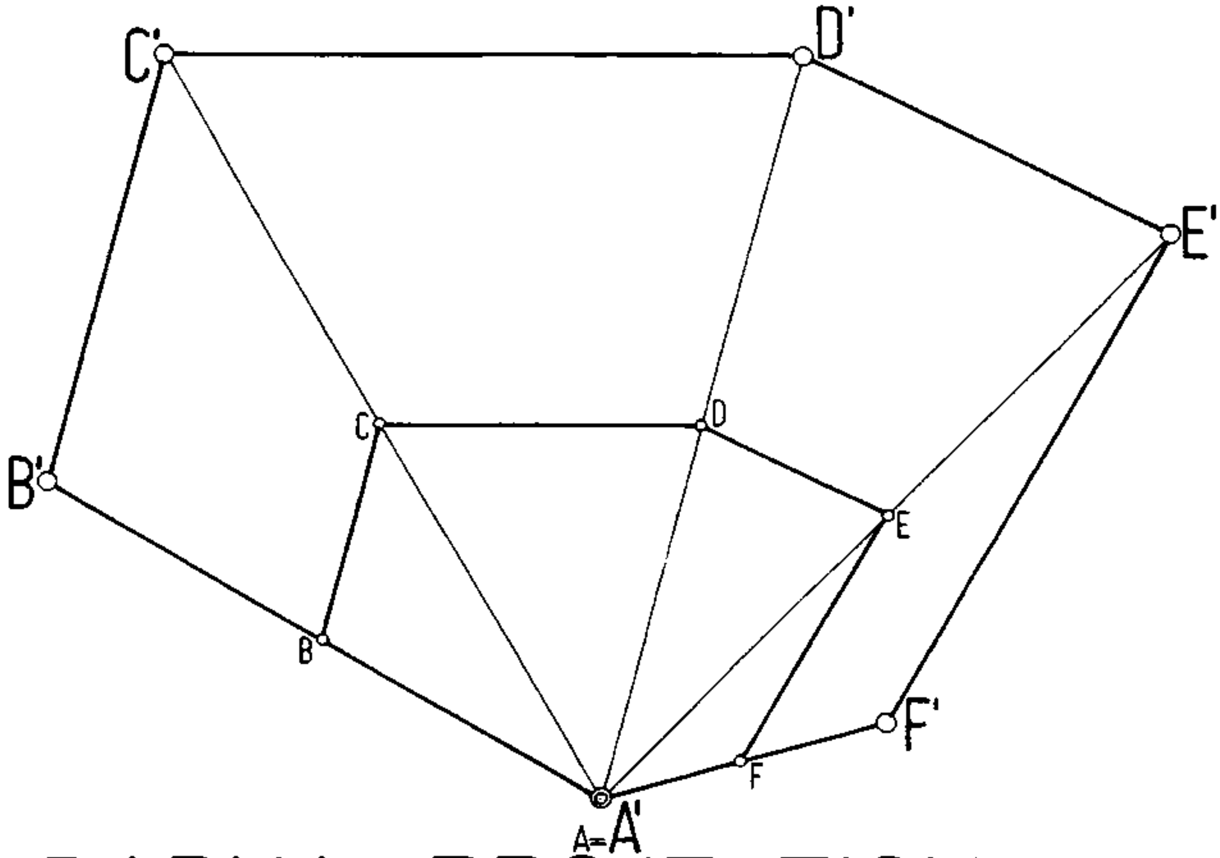

RADIAL PROJECTION

ADI	ENLARGEMENT	ARCH. DRWNG.
compiled : D.VOLKE		LECTURE
JUNE '83		CET 1o43/1539

TCA TECHNICAL COLLEGE ARUSHA CHUO CHA UFUNDI ARUSHA	CIVIL ENGINEER. DEPARTMENT	39

6.GEOMETRICAL CONSTRUCTION

LINES AND ANGLES

6. GEOMETRICAL CONSTRUCTIONS
In Architectural Drawing a good knowledge about GEOMETRICAL CONSTRUCTIONS is of high importance. In the following constructions are shown with the aim

1. To demonstrate the principles of BASIC geometrical constructions
2. To practice the use of drawing equipment

6.1 Lines and Angles

6.1.1 To bisect a straight line AB

- Draw AB
- With centre A and any suitable radius draw an arc
- With centre B and the same radius as before draw an arc to cut the arc with centre A in C and D
- Join CD. CD is the required bisecting line.

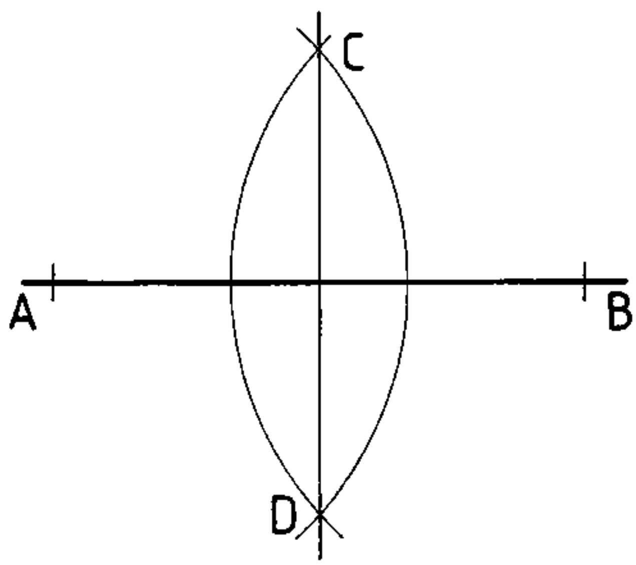

6.1.2 To divide a straight line AB into a given number of equal parts

- Draw AB
- At any suitable angle to AB draw a straight line
- Step off along this line the required number of divisions of equal length (here 5 divisions are shown)
- Number the divisions from A along the line as shown
- Join the last number (5) to point B
- Draw parallel lines to 5 B from the other numbers as shown. AB is now divided into the required equal parts.

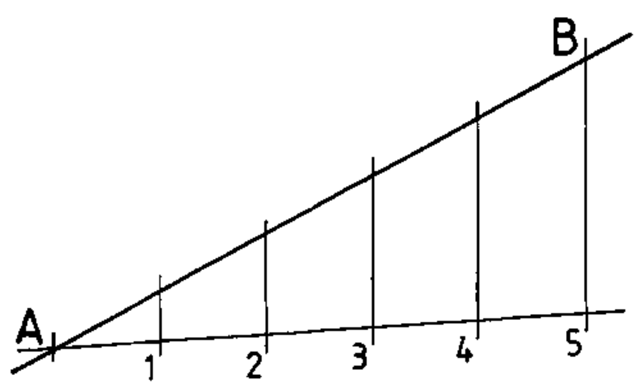

6.1.3. To divide a straight line AB into any ratio

- Let the ratio be 2:3:4
- Draw AB
- Draw a straight line at any angle to AB
- Sum up the ratio (i.e. 2+3+4=9) to geht the number of eaqual divisions required
- Step off, along the straight line the number of divisions of equal lengths required (i.e. 9 divisions).
- Join the last division (9) to B and draw parallel lines to 9B through 5 and 2
- Now AB is divided into the ratio 2:3:4.

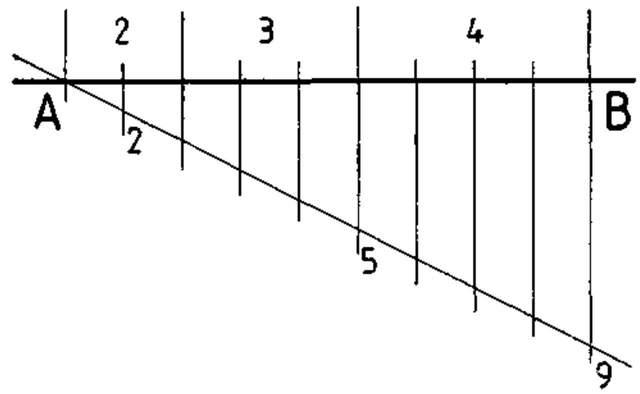

6.1.4 To construct an angle of 90^{0}

- Draw a straight line
- With centre A on that line and any suitable radius draw a semicircle to cut the line in B and C
- With centres B and C draw arcs of any the same radius to intersect each other at D
- Join AD. The Aangles ABD and ACD are the required angles of 45^{0}.

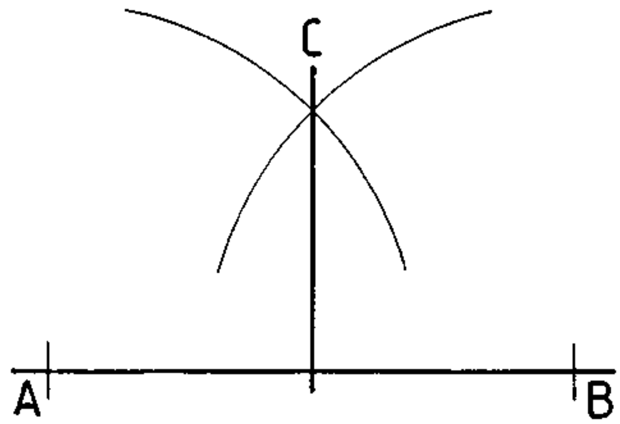

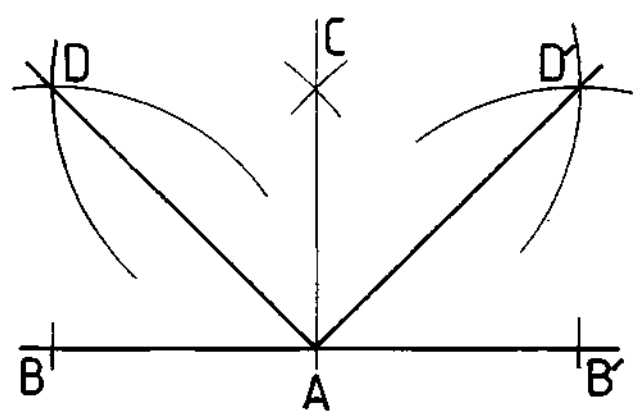

AD I compiled : D.VOLKE JUNE '83	GEOMETRICAL CONSTRUCT.	ARCH. DRWNG. LECTURE CET 1o43/16.141

6.1.6 To construct an angle of 60^{0}.
- Draw a straight line
- With centre A on that line and any suitable radius draw an arc to cut the line at B
- With centre B and the SAME radius draw an arc to cut the former arc at C.
- Join AC. The angle ABC the required angle of 60^{0}.

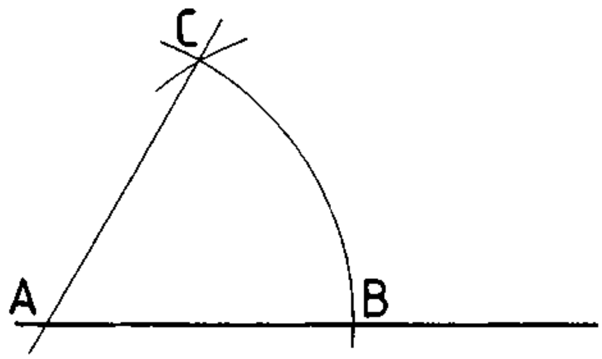

6.1.7 To construct an angle of 30^{0}
- This can be reached by bisecting an angle of 60^{0} as described under 6.1.5.

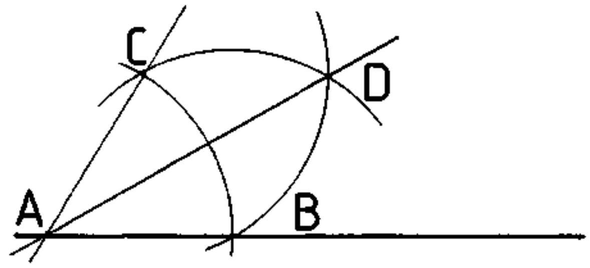

6.1.8 To bisect any given angle
- The same method as in 6.1.5 should be employed here.

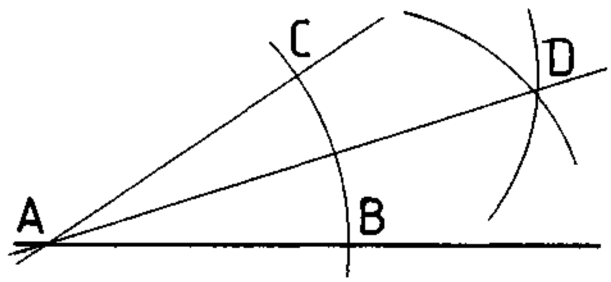

6.1.9 To construct an angle SIMILAR to a given angle
- Let the angle shown in (a) be the giver angle.
- Draw a straight line through M as shown in (b)
- With centre A and any suitable radius draw an arc to cut the legs of the given angle in B and C
- With centre M draw the same arc to cut the line through M at S (AB = MS)
- From (a) with centre B take radius BC.
- With centre S and radius BC cut former arc at T
- Join MT and extend the line. The angle MST is similar to ABC.

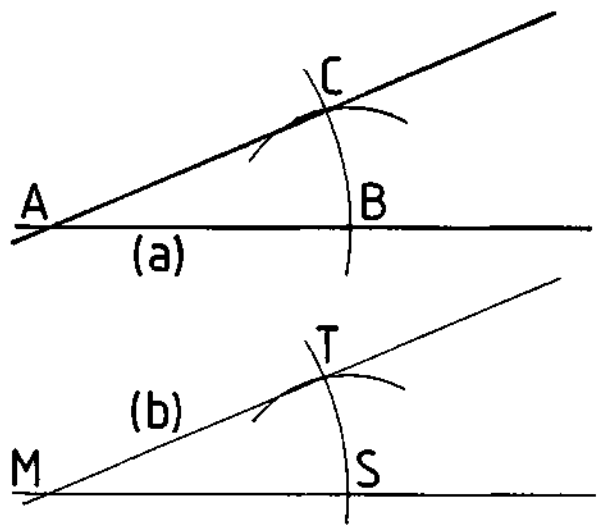

6.1.10 To draw a line PARALLEL to a given line
- Draw the given line
- Using any 2 centres at suitable intervals along the given line and a radius, equal to the required distance between the 2 lines, draw the arcs C and D.
- Draw a straight line tangential to the arc C and D. This is the required line which is parallel to the given line at the distance of the radius.

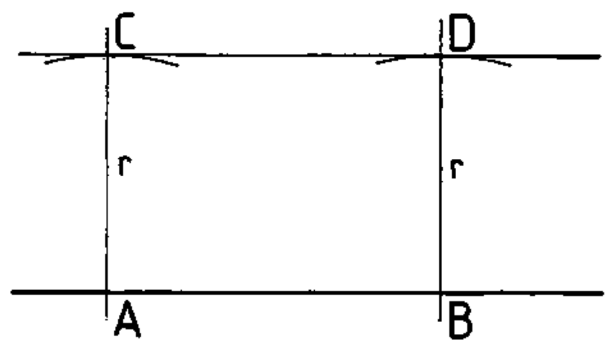

TRIANGLES

6.2 Triangles
Definition: A TRIANGLE is a PLAIN, bounded by three straight lines.

There are 4 types of triangles:

1. scale triangle: all angles and sides are UNEQUAL
2. Isosceles triangle: two sides and angles are EQUAL
3. Equilateral triangle: all angles and sides are EQUAL
4. Right-angled triangle: contains one right angle.

6.2.1 To construct an EQUILATERAL triangle. Given is one of the sides AB
Draw AB
With centres A and B and the radius AB draw arcs to intersect at C
Join AC and BC, the triangle ABC is equilateral.

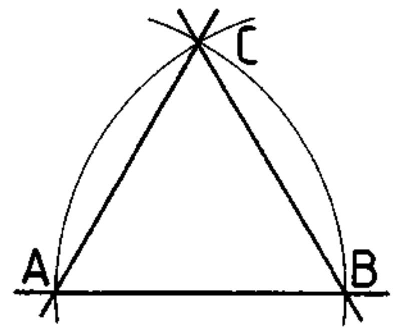

6.2.2 To construct a triangle with given BASE ANGLES and ALTITUDE.
- Draw a straight line
- Construct a straight line PARALLEL to the drawn line so that the distance between the two lines is equal to the altitude (ref.to 6.1.10)
- From any point C on the parallel line draw the given angles as shown so that they cut the straight line in A and B
- Join AC and BC. The triangle ABC is the reuqired triangle.

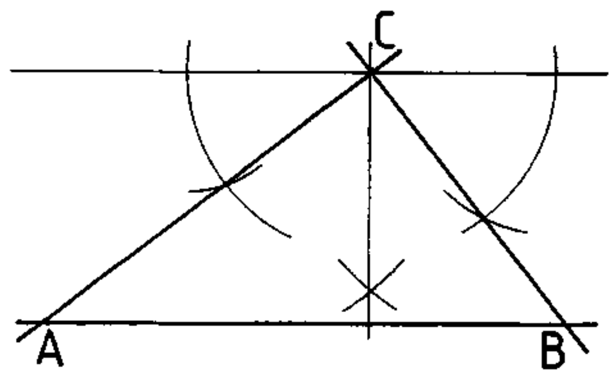

6.2.3 To inscribe a circle in a given triangle ABC
- Bisect any two of the angles, as shown, so that the bisectors intersect at D
- The centre of the inscribing circle is point D.

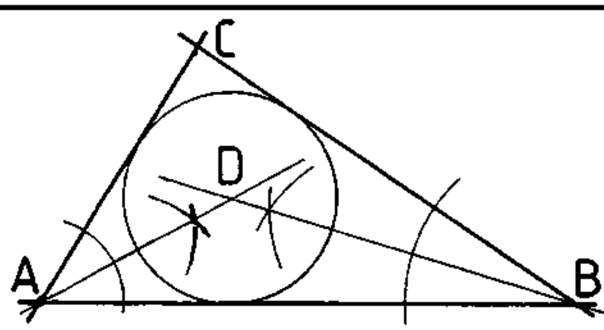

6.2.4 To circiumscribe a triangle ABC
- Bisect any two of the sides of the triangle, as shown, so that the bisectors intersect at D.
- The centre of the circumscribing circle is point D.

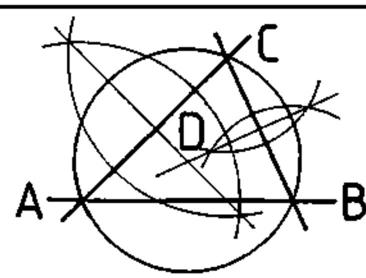

CIRCLES

6.3 Circles
A circle is a plane figure hounded by a curved line called the CIRCUMFERENCE; which is always at equal distance from a fixed point called the CENTRE of the circle. This distance from the centre O to the circumference is known as the RADIUS. Other terms are: -

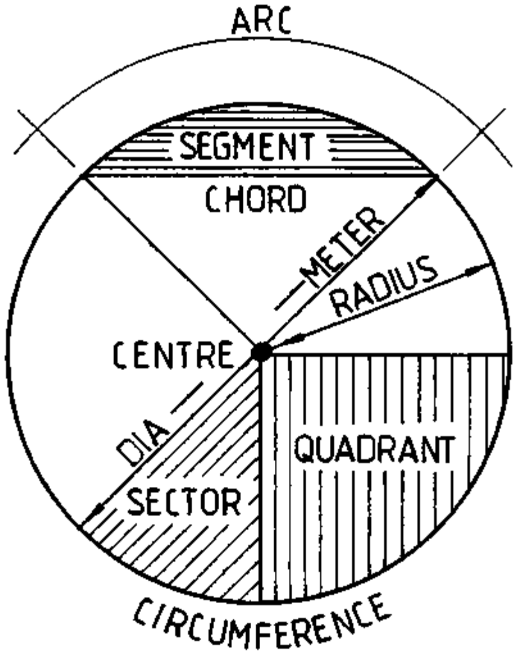

DIAMETER:	A straight line passing through the centre and bounded by the circumference
ARC	Is a name given to a part of a circumference
CHORD	A straight line joining two points on the circumference
SEGMENT	An area bounded by a chord and the arc it cuts
SECTOR	An area bounded by two radii and the arc between them
QUADRANT	An area bounded by two radii at right angles and the arc between them. It is a quarter of a circle.

6.3.1 Basic CIRCLE-Constructions

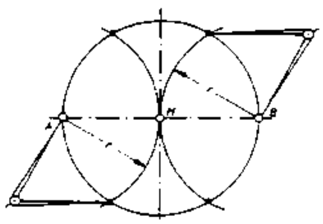

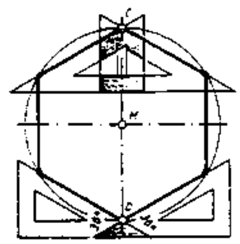

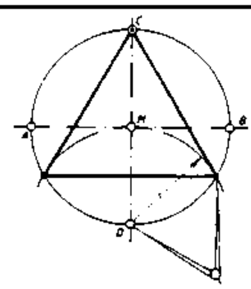

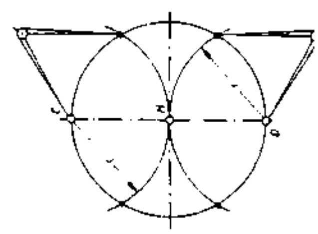

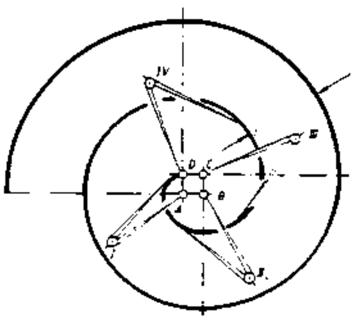

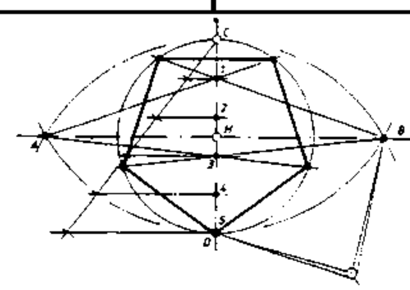

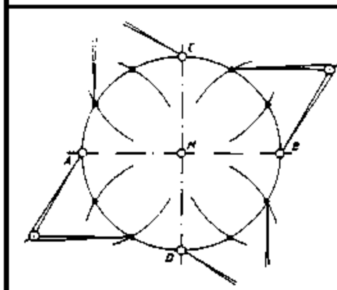

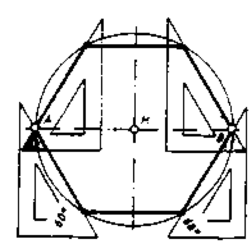

6.3.2 To draw a tangent to a point A on the circumference of a circle centre O

- Join OA
- Erect a perpendicular at point A as shown. The perpendicular is the re- required tangent.

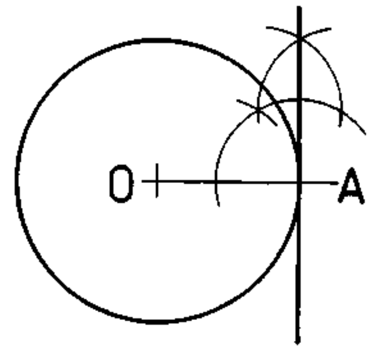

6.3.3 To draw an internal tangent to two circles of equal diameter
- Join the centres of both circles by line O_1O_2
- Bisect the line O_1O_2 to get the point A.
  Then bisect O_1A to geht the point B.
- With radius BO_1 and centre B describe a semi-circle to cut the circumference of one of the given circles at C
- Join CA and estend it to tough the other circle at D. Line CAD is the required tangent. O_1C and O_2D are normals.

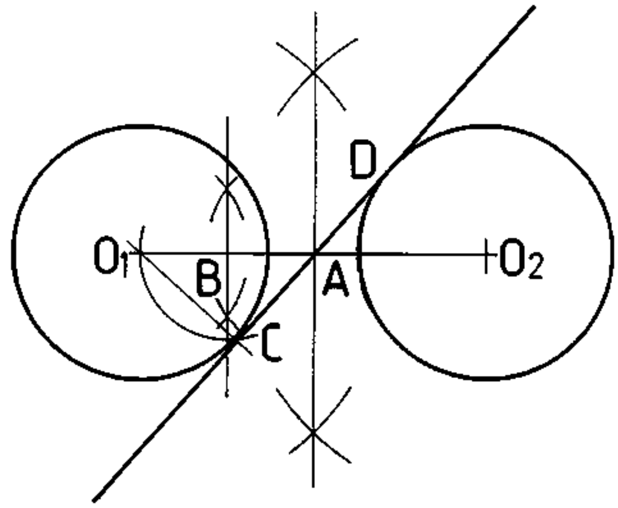

6.3.4 To find the centre of a given circle arc
- Draw any two chords AB and CD
- Draw perpendicular bisectors of AB and CD
- Produce the hisectors to meet at O. O is the required centre of circle.

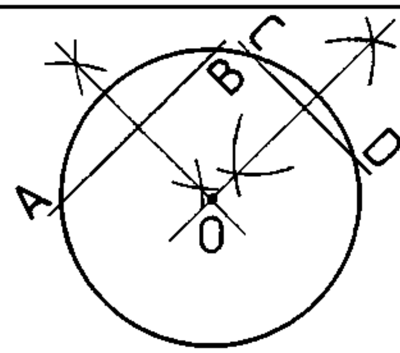

6.3.5 To join two straight lines at Right Angles to each other by an arc of given radius

- Draw the given straight lines at a right angle to meet at O
- With the centre O and the radius equal to the required radius of the arc, draw arcs to intersect the straight lines at A and B
- With the centres A and B and the same radius draw arcs to intersect at C
- With the centres C and given radius, draw the required arc.

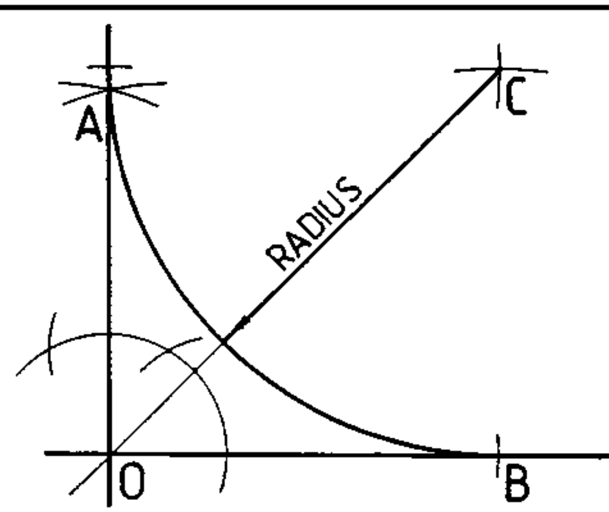

AD I
compiled : D.VOLKE
JUNE '83
GEOMETRICAL CONSTRUCT.
ARCH. DRWNG.
LECTURE
CET 1o43/16.345
TCA TECHNICAL COLLEGE ARUSHA
CHUO CHA UFUNDI ARUSHA
CIVIL ENGINEER.
DEPARTMENT

6.3.6 To draw a curve of given radius joining two circles (The circles have to be inside the radius R)

- With centre O and radius T_1 draw an arc,
- With centre O_2 radius T_2 draw an arc to intersect the first arc in O. O is the required centre.

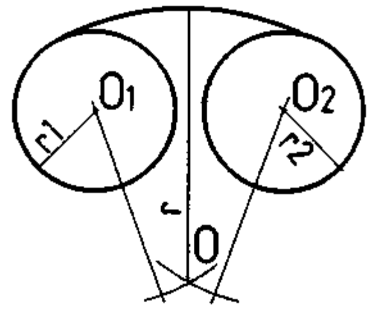

6.3.7 To join two straight lines by two arcs of equal radius

- Draw the two straight lines XA and YB at their correct positions.
- Join AB and bisect it at C
- Bisect AC and CB and estend the two bisectors to meet perpendiculars from A and B at points D and E respectively.
- With centre D and radius AD draw an arc from A to C
- With centre E and radius EB draw an arc from B to C. These are the required curves and give a smooth continuous curve ACB.

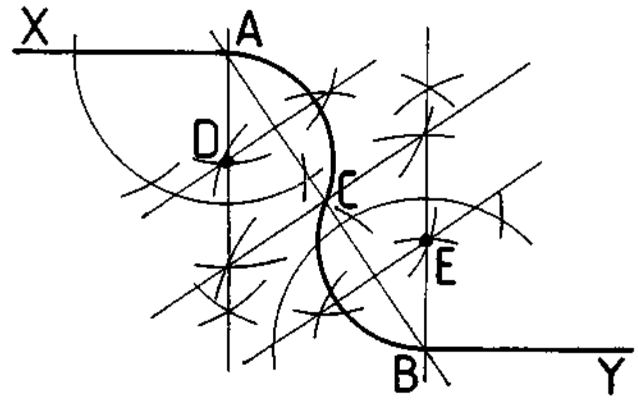

6.4 BASIC ARCH CONTRUCTIONS

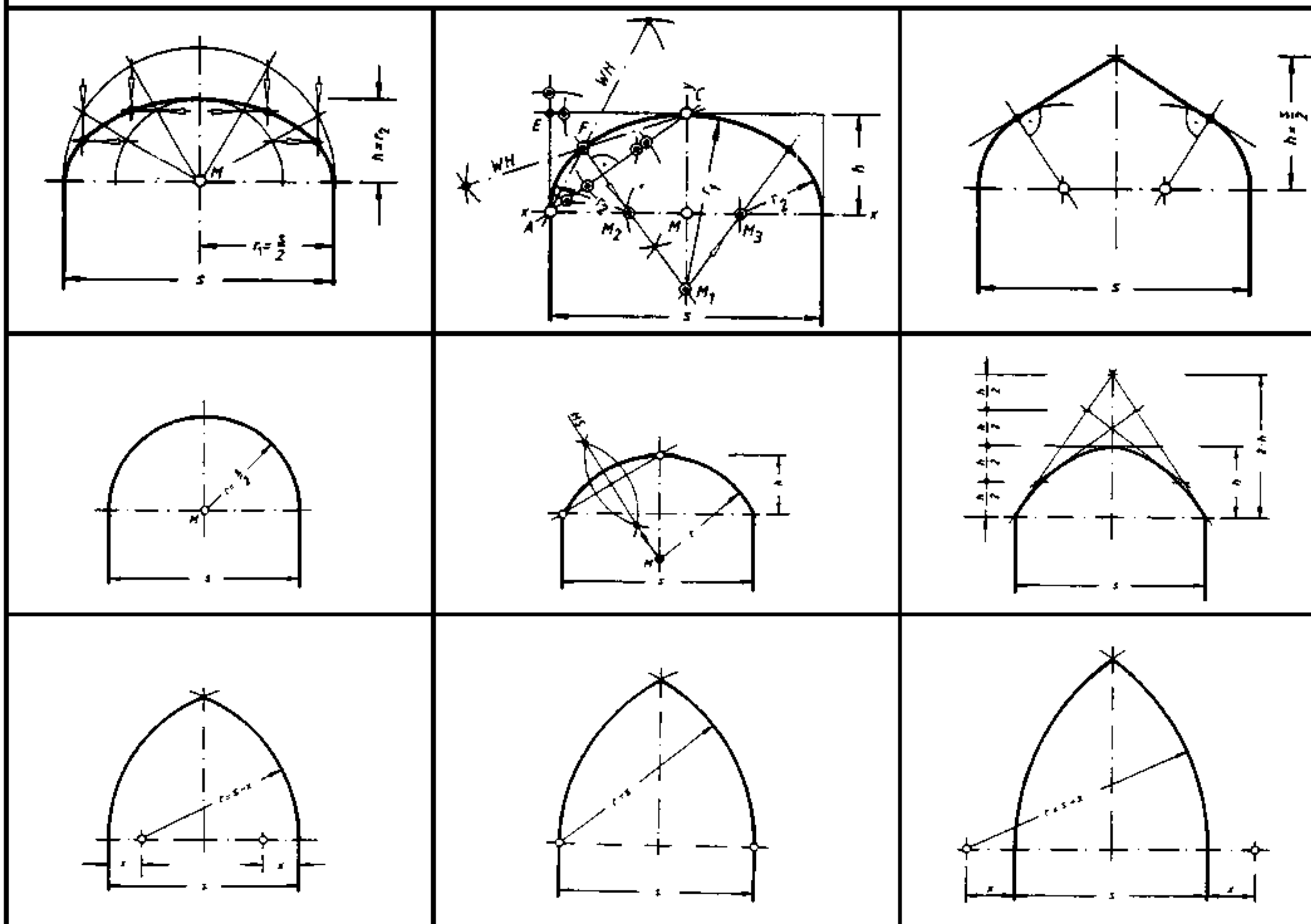

ARCHITECTURAL DRAWING II

CONTENTS:

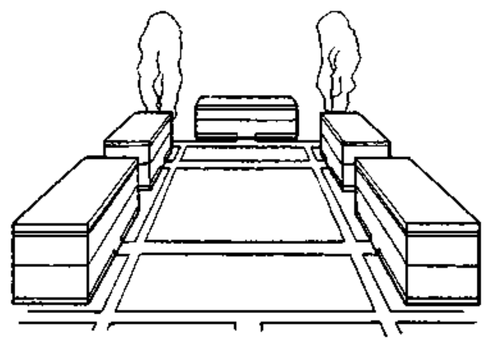

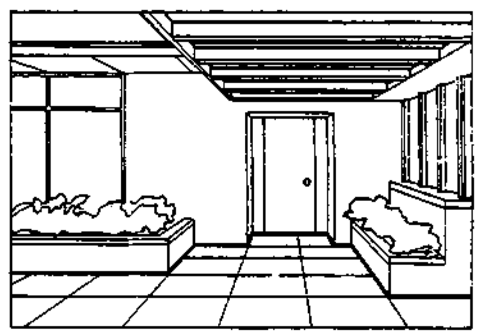

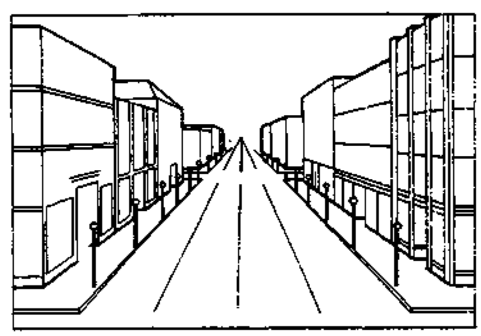

REFERENCES:

1. C.Leslie Martin "ARCHITECTURAL GRAPHICS"
2. E. Neufert "ARCHITECTS DATA"
3. Dahmlos/Witte "Bauzeichnen"

AD II		ARCH. DRWNG.
compiled : D.VOLKE		LECTURE
AUG. '83		CET 2o43/1 IoI

TCA TECHNICAL COLLEGE ARUSHA
CHUO CHA UFUNDI ARUSHA

CIVIL ENGINEER. DEPARTMENT

1.TYPES OF PROJECTIONS

1. TYPES OF PROJECTIONS

Drawings are a medium through which the draftsman or designer conveys his ideas and instructions to others. Therefore an understanding of all types of drawing is necessary in order to present informations in the clearest and most effective manner.

The theory of any type of projection drawing assumes that the drawing can be made by locating the intersections of lines, which are called PROJECTORS from points on the object with a plane of projection called the PICTURE PLANE:

The lines connecting the points thus located on the picture plane make the projected drawing of the object.
The three factors which determine the type of projection drawing are:

1. The relation of the object to the picture plane
2. The relation of the projectors to the picture plane, and
3. The relation of the projectors to each other.

Various types of ORTHOGRAPHIC and PERSPECTIVE PROJECTION are obtained by changing the relation between the object and picture plane. In OBLIQUE PROJECTION the different types are obtained by changing the relative positions of the object and picture plane and by changing the scale of the receding lines. Variations in pictural effect of any type of oblique drawing can also be secured by using different directions for the projectors.
In actual drawing the paper is the picture plane on which the drawing is constructed by drafting methods to conform to the assumed relations of the object, projectors, and picture plane.
PROJECTION DRAWING is the science of constructing drawings of different types by the most efficient and direct drafting methods.

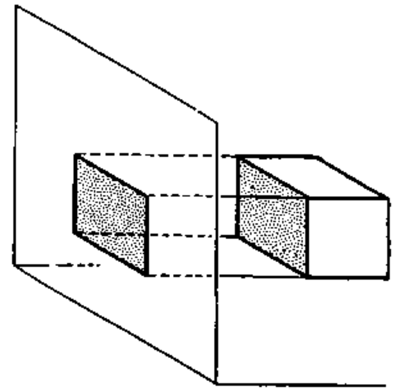

(A) ORTHOGRAPHIC
PROJECTORS PERPENDICULAR TO PICTURE PLANE

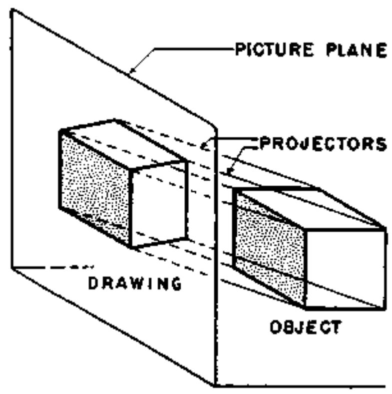

(B) OBLIQUE
PARALLEL PROJECTORS OBLIQUE TO PICTURE PLANE

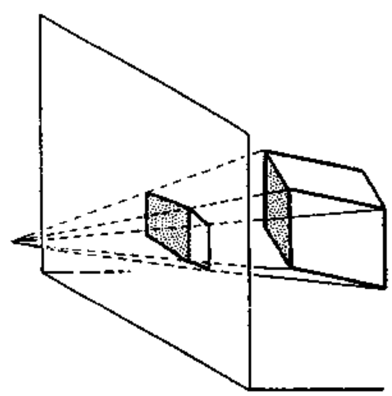

(C) PERSPECTIVE
PROJECTORS CONVERGE TO A STATION POINT

CLASSIFICATION OF TYPES OF PROJECTION DRAWING

TYPE OF DRAWING			RELATION OF		
GENERAL TYPE	GRAPHIC DIAGRAM	SPECIFIC CLASSIFICATION	OBJECT TO PICTURE PL.	PROJECTORS TO EACH OTHER	PROJECTORS TO PICTURE PL.
ORTHOGRAPHIC		MULTI-VIEW	PARALLEL ON ONE FACE	PARALLEL	PERPENDICULAR
ORTHOGRAPHIC – AXONOMETRIC		ISOMETRIC	OBLIQUE THREE AXES AT EQUAL ANGLES WITH PICTURE PLANE	PARALLEL	PERPENDICULAR
ORTHOGRAPHIC – AXONOMETRIC	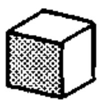	DIMETRIC	OBLIQUE TWO AXES AT EQUAL ANGLES WITH PICTURE PLANE	PARALLEL	PERPENDICULAR
ORTHOGRAPHIC – AXONOMETRIC	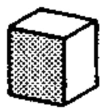	TRIMETRIC	OBLIQUE ALL AXES DIFFERENT ANGLES WITH PICTURE PLANE	PARALLEL	PERPENDICULAR
OBLIQUE	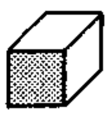	CAVALIER PROJECTION	PARALLEL ON ONE FACE	PARALLEL	OBLIQUE 45°
OBLIQUE		GENERAL OBLIQUE	PARALLEL ON ONE FACE	PARALLEL	OBLIQUE AT ANY ANGLE
OBLIQUE		CABINET PROJECTION	PARALLEL ON ONE FACE	PARALLEL	OBLIQUE AT 63° APPROX.
PERSPECTIVE		ONE-POINT PERSPECTIVE	PARALLEL ON ONE FACE	CONVERGE TO A POINT	VARIOUS ANGLES
PERSPECTIVE		TWO-POINT PERSPECTIVE	OBLIQUE VERTICAL LINES PARALLEL TO PICTURE PLANE	CONVERGE TO A POINT	VARIOUS ANGLES
PERSPECTIVE		THREE-POINT PERSPECTIVE	OBLIQUE ALL THREE AXES OBLIQUE TO PICTURE PLANE	CONVERGE TO A POINT	VARIOUS ANGLES

AD II compiled : D.VOLKE AUG. '83	TYPES OF PROJECTIONS	ARCH. DRWNG. LECTURE CET 2043/1 1o2
TCA TECHNICAL COLLEGE ARUSHA CHUO CHA UFUNDI ARUSHA	CIVIL ENGINEER. DEPARTMENT	2

METHODS

The most important types of projection are classified in the chart, typical examples of drawings of the four most widely used divisions of projection drawing are given in the figure.

Most of the objects drawn in architecture have three sets of planes and lines which are mutually perpendicular to each other.

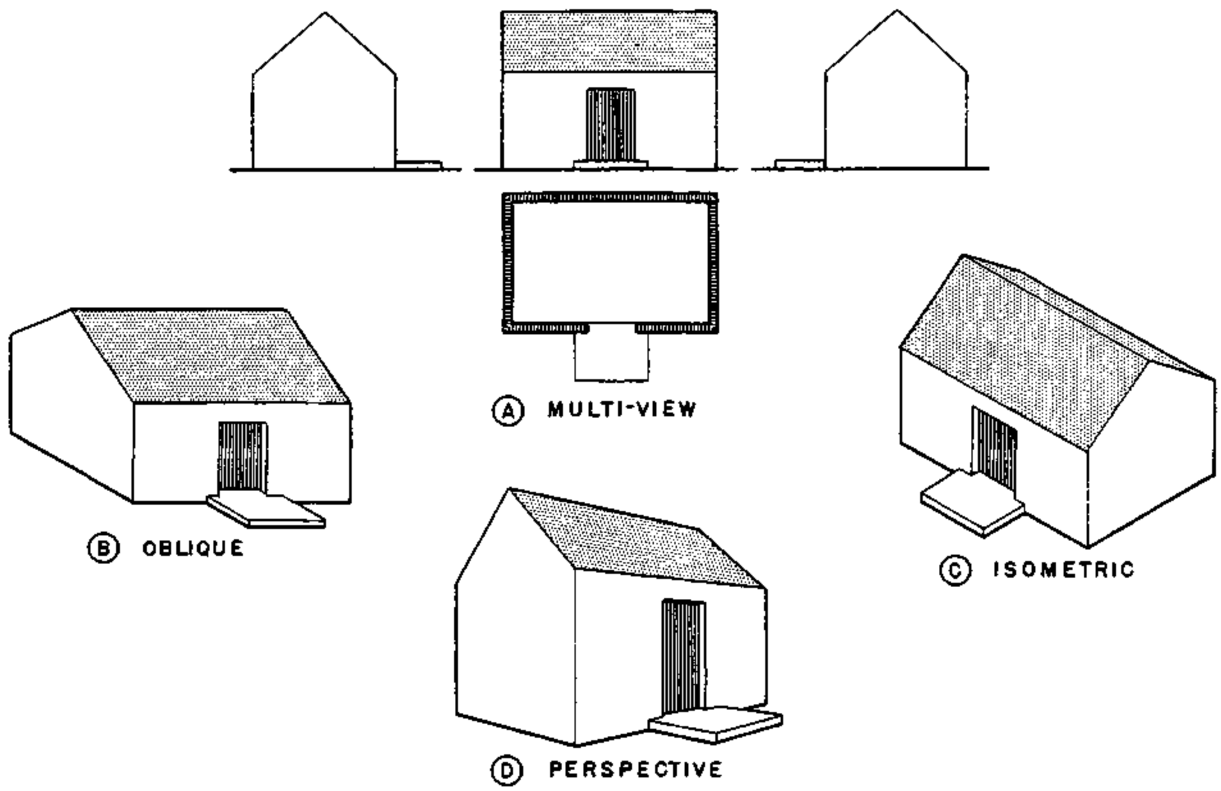

A COMPARISON OF FOUR WIDELY USED TYPES OF DRAWING

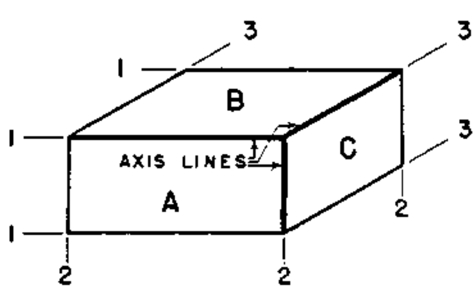

TYPICAL LINES AND PLANES

PROJECTION DRAWING METHODS

AD II compiled : D.VOLKE AUG. '83	TYPES OF PROJECTIONS	ARCH. DRWNG. LECTURE CET 2o43/1 1o3

TCA TECHNICAL COLLEGE ARUSHA CHUO CHA UFUNDI ARUSHA	CIVIL ENGINEER. DEPARTMENT	3

2.ORTHOGRAPHIC PROJECTION

2. ORTHOGRAPHIC PROJECTION

In any type of drawing those parts of the object which are parallel to the picture plane are shown in their TRUE SHAPES.

In ORTHOGRAPHIC PROJECTION where the projectors are parallel lines, all parts of the object which are parallel to the picture plane are shown in their correct RELATIVE SIZES, that is, at the same scale - regardless of their distances from the picture plane.

Since only one set of planes of an object can be shown parallel to the picture plane in a single drawing, it is necessary to have a minimum number of three views of an object to give all of its sizes and shapes.
These three basic views are obtained by looking in three mutually perpendicular directions, and these views are drawn on planes perpendicular to each of the three directions respectively.

The basic views, which are drawn true to scale, are taken at 90^{0} to each other and when set on paper are said to be drawn in the principal planes.

At present there are two methods of relating the principal views to each other, namely FIRST-ANGLE PROJECTION (used in Europe) and THIRD ANGLE PROJECTION (used in Canada and U.S.A.)

These terms FIRST ANGLE and THIRD ANGLE have been derived from the mathematicians convention of annotating the four right angles which make up the 360^{0} of a circle, the first being 0^{0} to 90^{0} and the third angle from 180^{0} to 270^{0}.

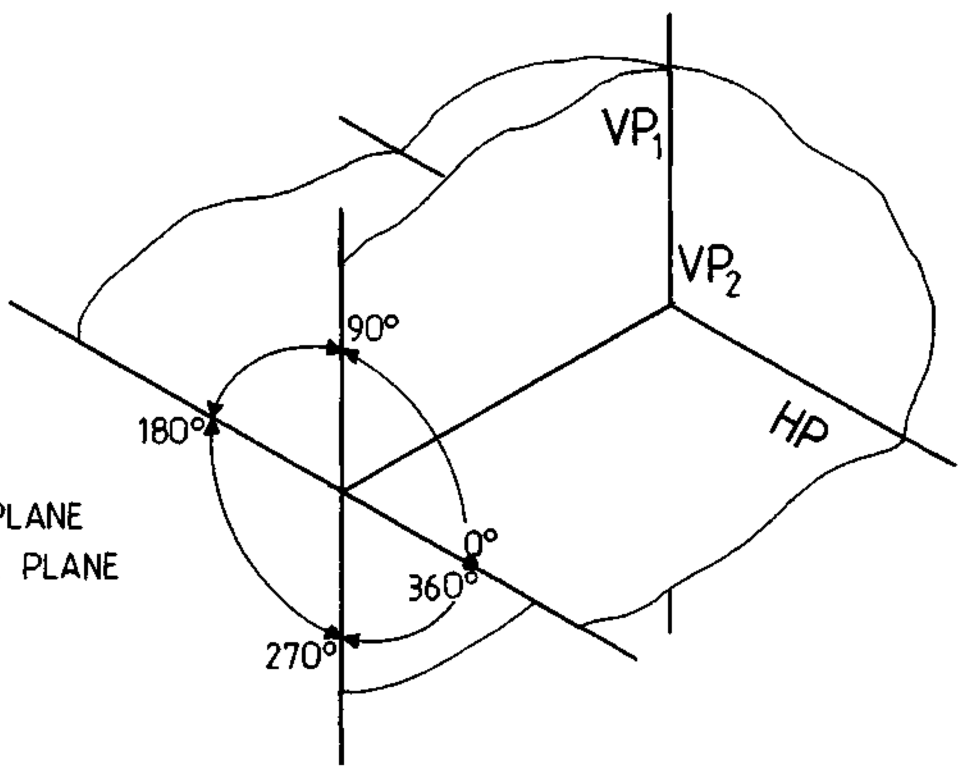

VP =VERTICAL PLANE
HP =HORIZONTAL PLANE

1st ANGLE PROJECTION

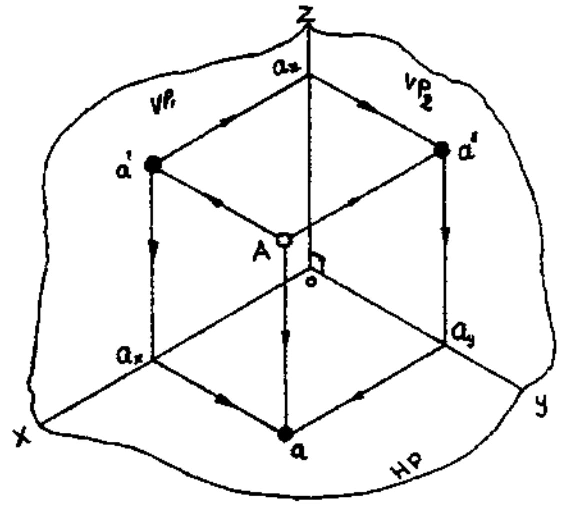

1. **Projection of a Point (A)**

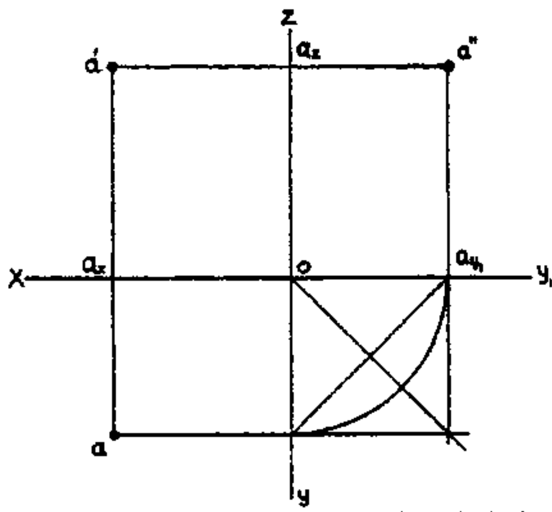

Orthographic projection of point A

(a)AB ⊥ VP

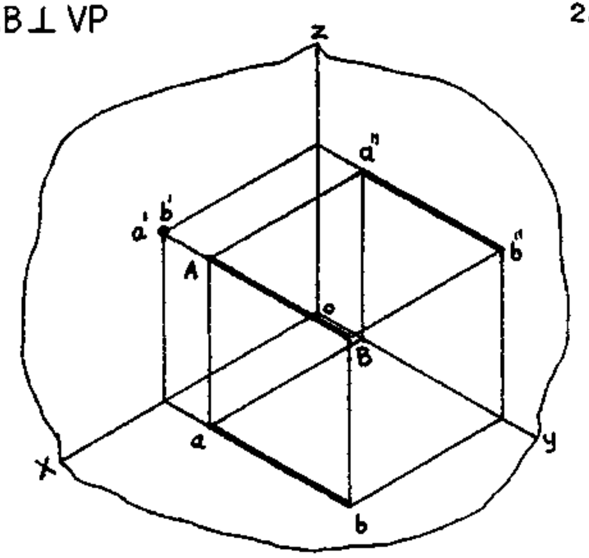

2. **Projection of a line (AB)**

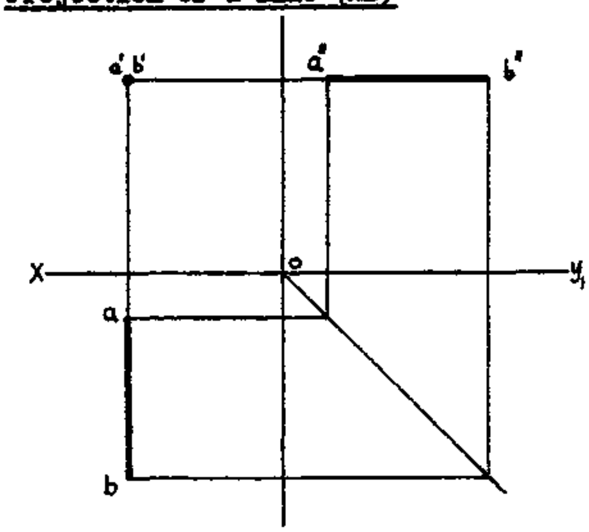

(b) AB NOT parallel to any plane

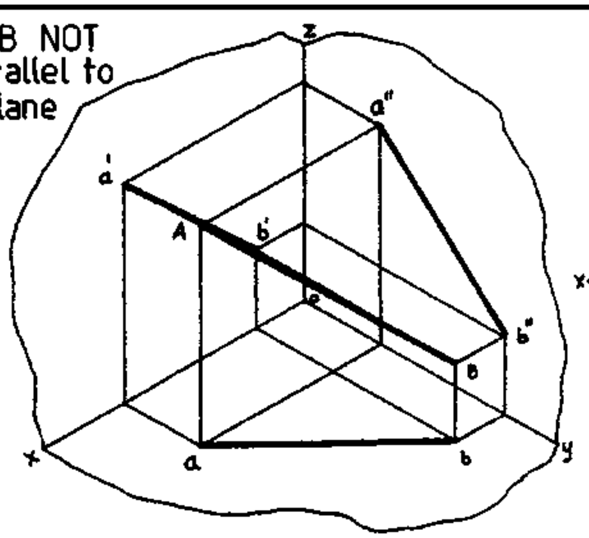

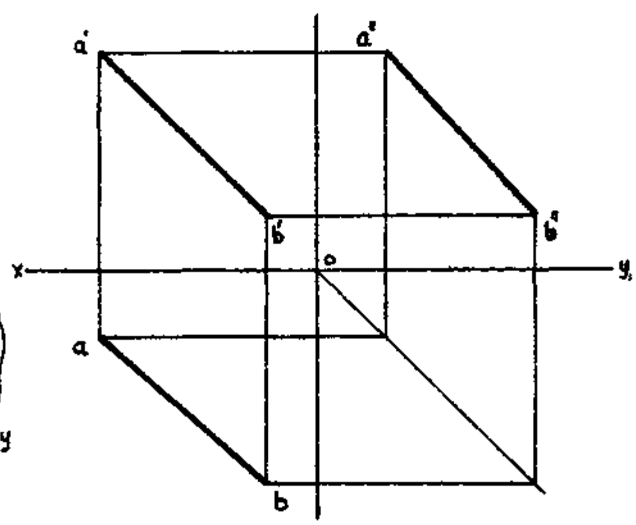

AD II compiled : D.VOLKE AUG. '83	ORTHOGRAPHIC PROJECTION	ARCH. DRWNG. LECTURE CET 2043/1205

TCA TECHNICAL COLLEGE ARUSHA CHUO CHA UFUNDI ARUSHA	CIVIL ENGINEER. DEPARTMENT	5

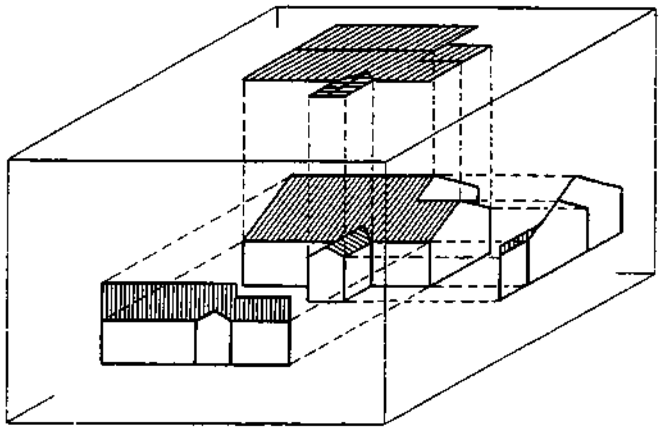

Ⓐ PROJECTING ONTO THE GLASS BOX

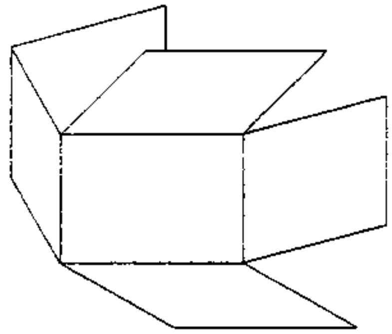

Ⓑ REVOLVING PLANES OF THE GLASS BOX

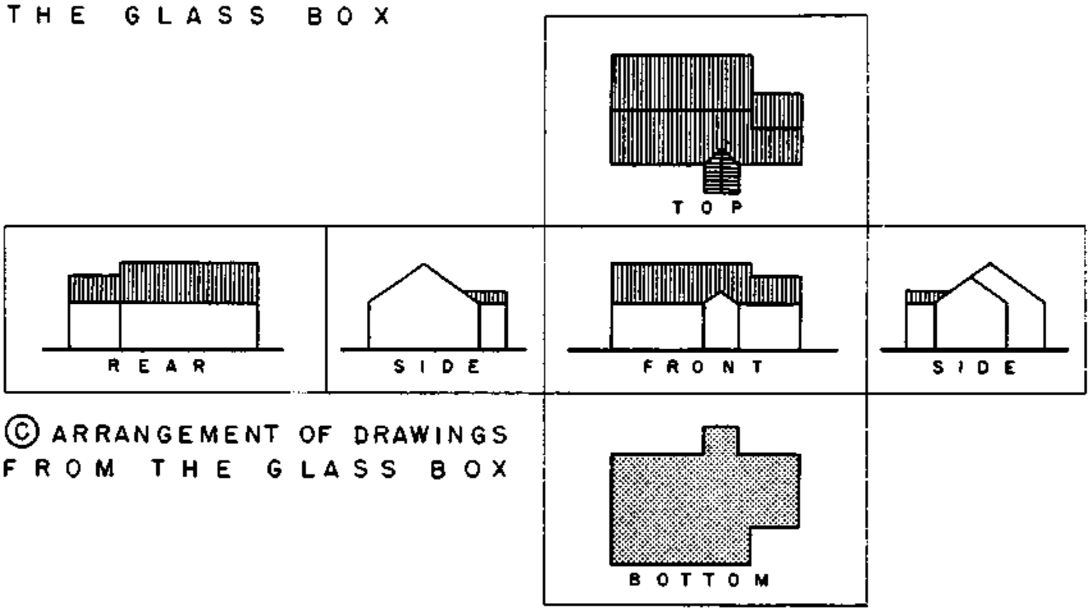

Ⓒ ARRANGEMENT OF DRAWINGS FROM THE GLASS BOX

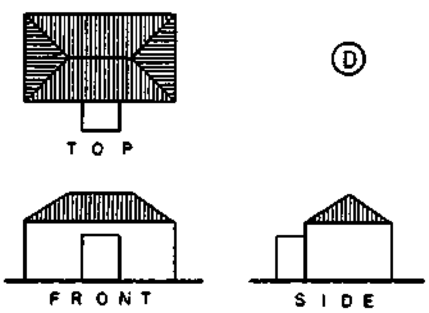

ARCHITECTURAL ARRANGEMENTS

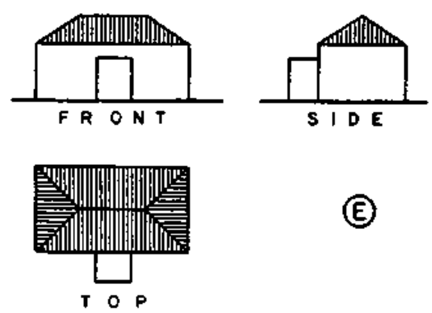

The planes provided by the transparent box - shape of the figure are not always adequate to give TRUE SHAPE VIEWS of all sides of a building. If a wall of the building is not parallel one of the typical planes and consequently one of the faces of the transparent box, its TRUE SHAPE will not be shown by any of the conventional elevations. Picture planes, which are added to the transparent box - shape in order to obtain true shape views of planes of the object not parallel to the original planes of the box, are called AUXILIARY PLANES (see figure A and D) and the projections made on these planes are called AUXILARY VIEWS.

The true shape of any oblique surface, such as a slating roof or wall, can then be obtained by projecting onto an auxiliary plane parallel to the oblique surface.

AD II compiled : D.VOLKE AUG. '83	ORTHOGRAPHIC PROJECTION	ARCH. DRWNG. LECTURE CET 2043/1 2o6
TCA TECHNICAL COLLEGE ARUSHA CHUO CHA UFUNDI ARUSHA	CIVIL ENGINEER. DEPARTMENT	6

AUXILIARY VIEWS

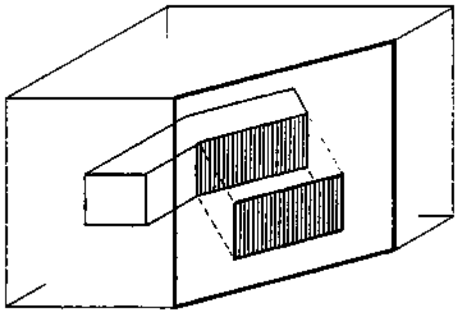

Ⓐ VERTICAL AUXILIARY PLANE

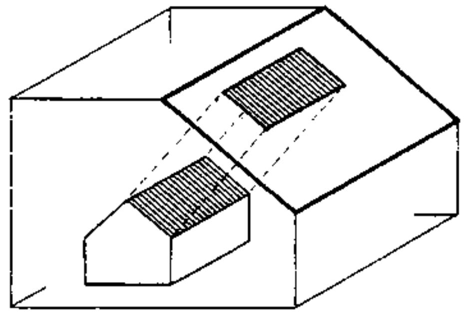

Ⓓ OBLIQUE AUXILIARY PLANE

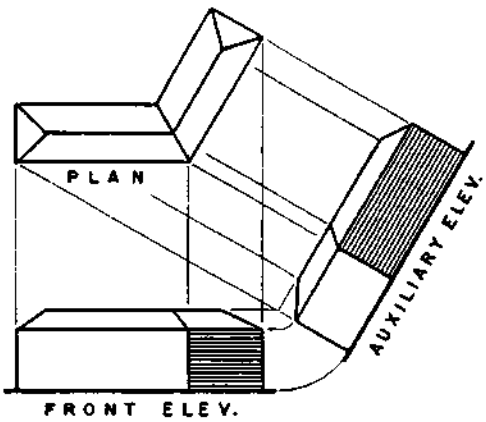

Ⓑ COMPLETE AUXILIARY VIEW

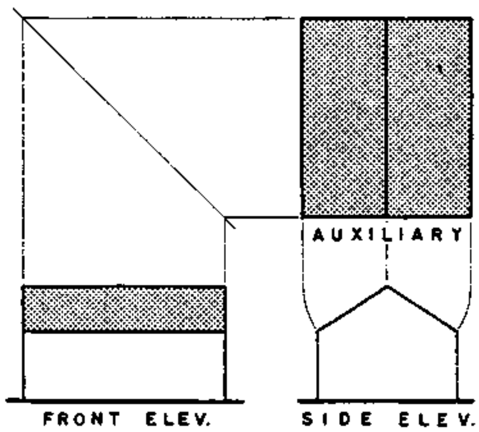

Ⓔ GABLE ROOF AUXILIARY

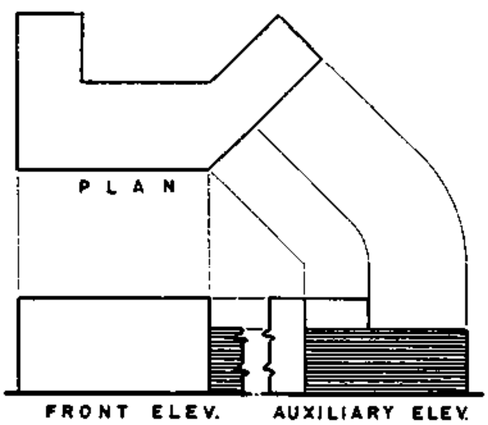

Ⓒ PART AUXILIARY VIEW

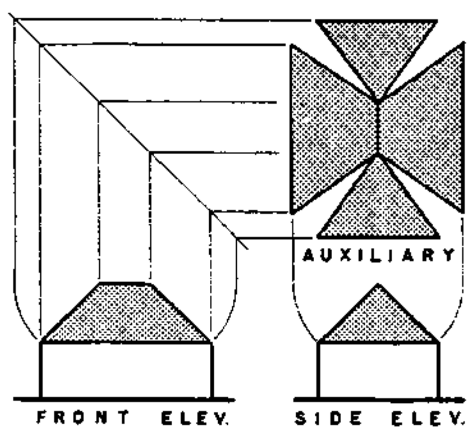

Ⓕ HIP ROOF AUXILIARY

ELEVATION AUXILIARIES

OBLIQUE PLANE AUXILIARIES

2.1 Construction of Orthographic Projection

In the CONSTRUCTION of orthographic projections, it should be kept in mind that all the different views must check. Drafting methods for the construction of orthographic projections are shown in the figure.

CONSTRUCTION

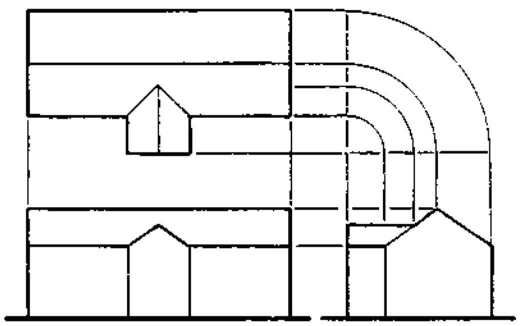

Ⓐ TURNING MEASUREMENTS WITH CIRCULAR ARCS

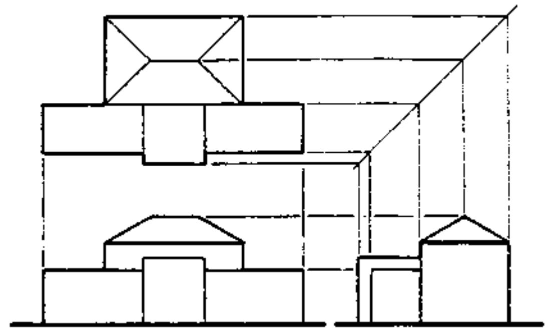

Ⓑ TURNING MEASUREMENTS ON A 45° BISECTOR

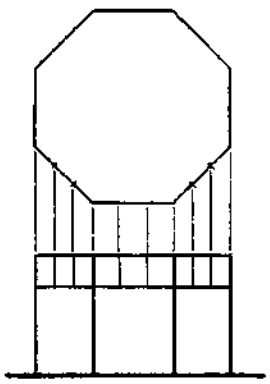

Ⓒ OCTAGON

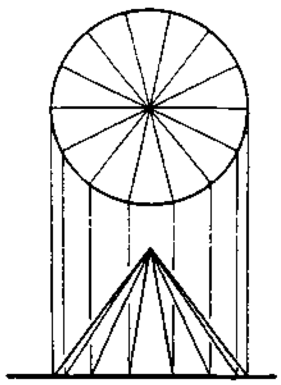

Ⓓ CONE

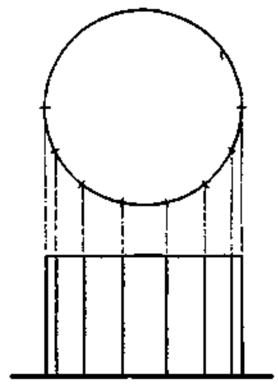

Ⓔ CYLINDER

EQUAL DIVISIONS ON GEOMETRIC SHAPES

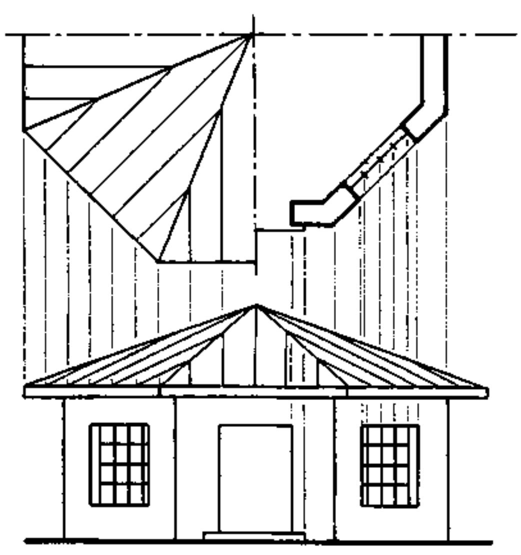

Ⓕ OCTAGONAL BUILDING

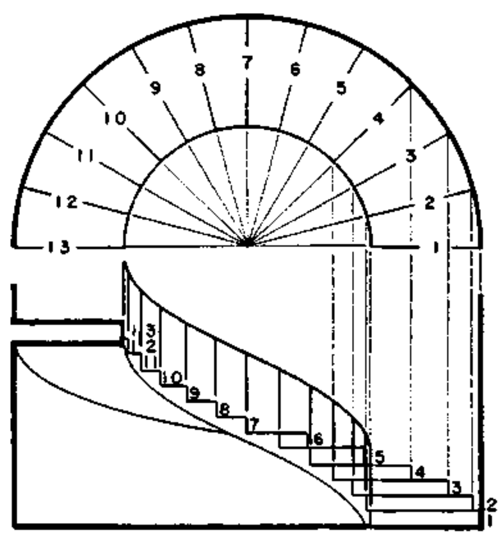

Ⓖ SPIRAL STAIRS

AD II	ORTHOGRAPHIC PROJECTION	ARCH. DRWNG.
compiled : D.VOLKE		LECTURE
AUG. '83		CET 2o43/1 2.1 o8

ELEVATIONS

2.2 Elevations

The most common auxiliary views in architecture are ELEVATIONS. The drafting process by which an auxiliary elevation is made may vary in details of construction. However, in all cases the heights may be taken from any other elevation of the building and the horizontal dimensions from plan.

The figure shows two methods of making the auxiliary elevation from a front elevation and plan.
In B the auxiliary drawing is made to show the entire building, as would usually be done in architectural drawing. In C only the part of the building parallel to the picture plane is shown in each elevation.

The front roof plane of E is shown by the front elevation to be a rectangle. The length of this roof area is shown in the front view and its true slant-height is shown in the side view. The rectangle made by using these two dimensions is the correct auxiliary view of the front roof plane.

In F all four planes of the simple hip roof are drawn in the auxiliary views. Such drawings are useful to show the true shapes and areas of the roof planes and the true lengths of lines in those planes. The slanting lines in the auxiliary view of F show the true length of the hips. The length of any straight line can be determine graphically by making an auxiliary view on any picture plane parallel to the line

PLANS

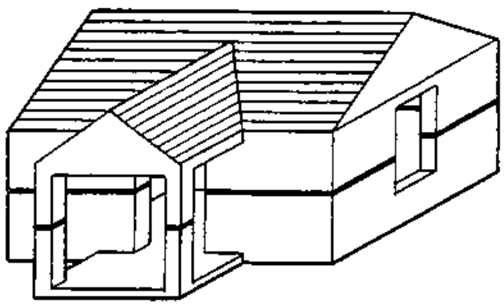

(A) POSITION OF PLANE

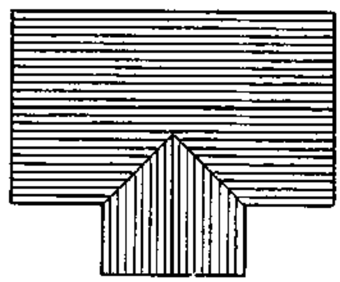

(D) ROOF PLAN

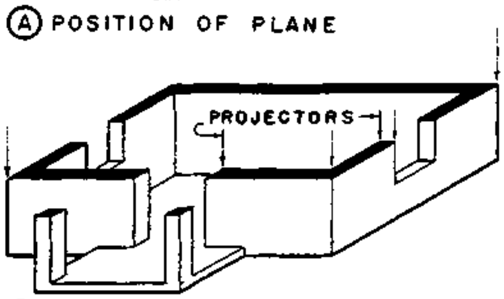

(B) TOP PART REMOVED

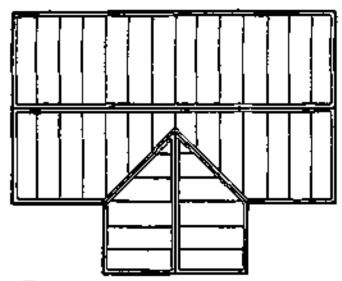

(E) FRAMING PLAN

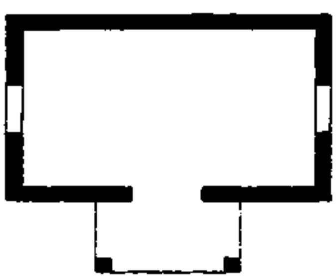

(C) PLAN OF REMAINDER

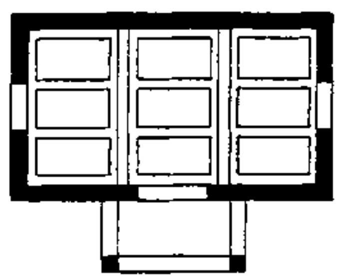

(F) REFLECTED PLAN

PLANS and SECTIONS

2.3 Plan s and Sections

In addition to the exterior views of building it is usually necessary to have one or more views made which CUT through the structure and shows the interior. These views are known as

1. PLAN, which is the term applied to any view on a HORIZONTAL PICTURE PLANE either from the exterior or cut through, and
2. SECTION, which is the name given to any view cutting through the building on a VERTICAL PLANE.

Both, the ARCHITECTURAL PLAN as well as the ARCHITECTURAL SECTION are demonstrated in the figure.

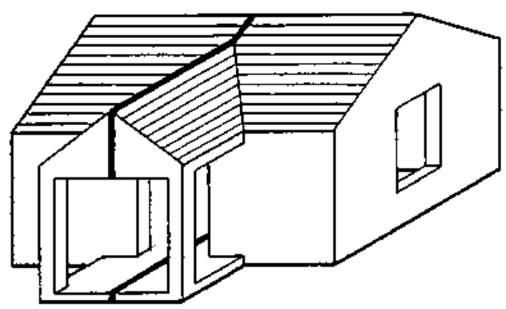

(A) POSITION OF PLANE

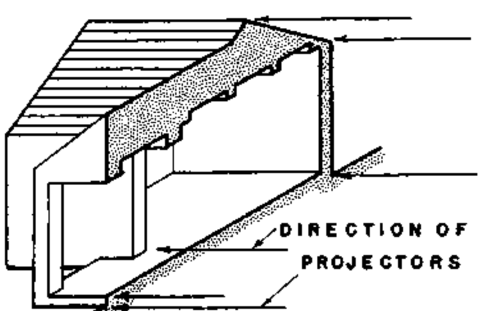

(B) RIGHT SIDE REMOVED

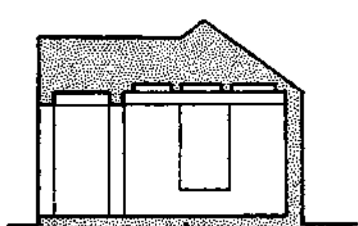

(C) SECTION OF REMAINDER

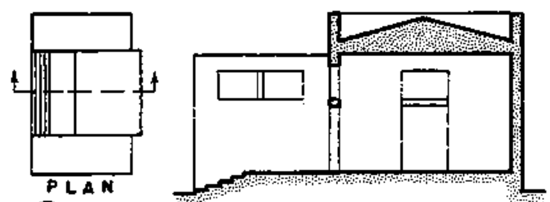

(D) TRANSVERSE SECTION

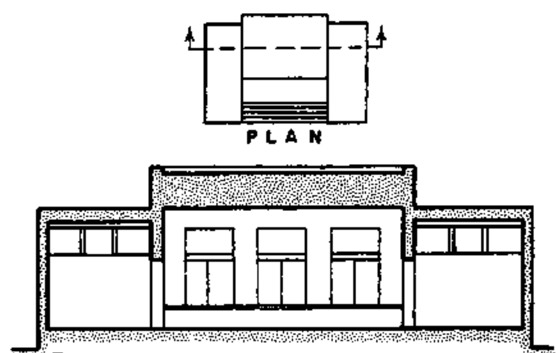

(E) LONGITUDINAL SECTION

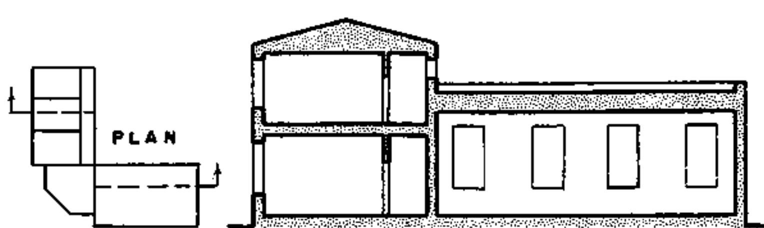

(F) OFFSET SECTION

3. PICTORIAL DRAWING

AXONOMETRIC

3.1 Axonometric Projection

Axonometric and oblique drawings are similar in many respects. Both give views of the object which show all three typical sets of lines and planes in ONE drawing. Both are more easily understood than orthographic drawings because they show all three dimensions in one drawing and indicate the relations of the various parts of the object to each other.

In both axonomic and oblique drawings parallel lines in any direction are drawn parallel. This simplifies construction but causes the more distant parts of the object to appear to be too large. This pictorial defect is the principal criticism of these types of drawings.

The three typical sets of lines of the object are all measured to scale in axonometric and oblique drawings. Therefore, most of the measuring can usually be done directly on the lines of the drawing itself, and it is practical to give dimensions on the drawings. Simplicity of construction is the chief advantage of these drawings over perspective drawing.

An AXONOMETRIC projection is an orthographic projection in which the object is tilted so that none of the three typical sets of planes, and consequently none of the axes at the intersections of these planes, are parallel to the picture plane.

Projectors from the object, perpendicular to the picture plane, locate points on the projected drawing of the object.

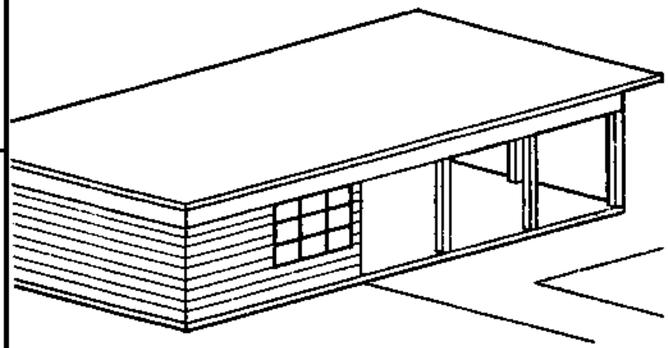

(A) AXONOMETRIC

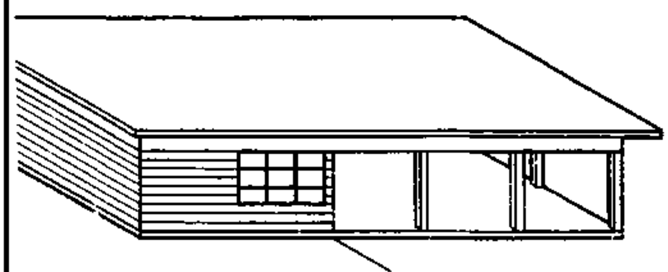

(B) OBLIQUE

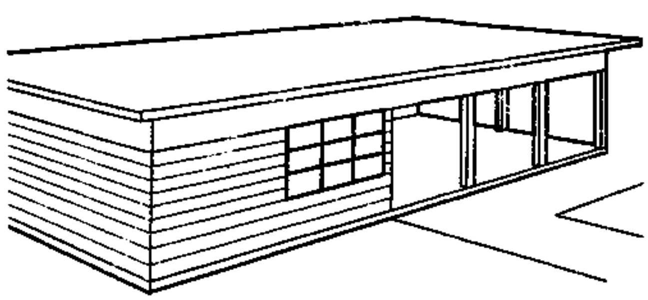

(C) PERSPECTIVE

AXONOMETRIC

All axonometric projections may be divided into three classifications:

1. ISOMETRIC projections, in which all three of the axes make equal angles with the plane of projection,

2. DIMETRIC projections, in which two of the axes make equal angles with the plane of projection, and the third axis is at different angle,

3. TRIMETRIC projections, in which all three axes are at different angles with the picture plane.

The axonometric drawings of a cube in the figure indicate the relation of the cube to the pictureplane in each case:

- In the isometric drawing all edges of the cube are represented as being of the same length because they are all turned at the same angle to the picture plane

- In the dimetric drawing of the cube two of the sets of edges are the same length and the third set a different length.

- In the trimetric drawing all three sets of edges of the cube are shown at different sizes, because the three sets of lines make different angles with the picture plane.

The relative sizes of the edges of the cube in the dimetric and trimetric drawing can be varied, but the relation is isometric drawing does not allow any variation.

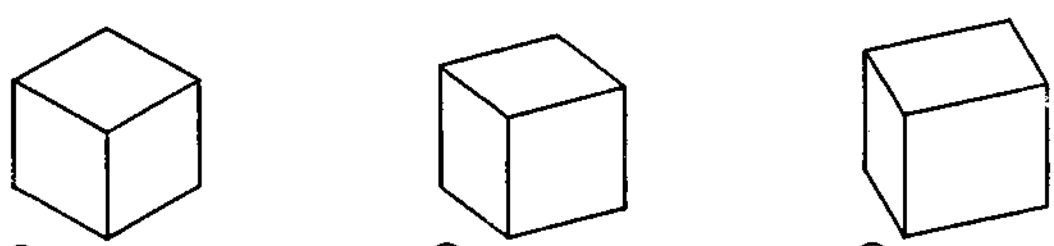

(A) ISOMETRIC (B) DIMETRIC (C) TRIMETRIC

ISOMETRIC

3.2 Isometric Projection.

A scale is assumed for the object and the projected or foreshortened size drawing for that scale is shown in an siometric projection. The projected size of the axis lines is 0.816 of the actual length of the lines. An isometric drawing of an object is measured at any desired scale without considering the scale size of the object represented. The figure shows the difference in size between the isometric projection (B) made with the isometric scale and the isometric drawing (C) measured with the ordinary scale. Although isometric drawings are satisfactory for most practical purposes isometric projections sometimes have advantages.

Making an isometric drawing the angle between two adjacent axes of an isometric drawing is 120^0. When one axis is vertical the other two are at 30^0 with the horizontal.
To make an isometric drawing of a simple rectangular object: from a point selected for one of the front corners of the object draw the three axis lines and lay out on these lines their scale sizes. From the ends of the lines draw lines parallel to the axes to complete the drawing.

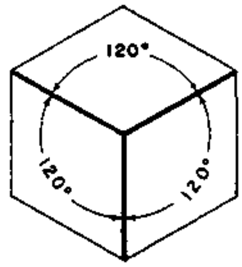

(A) ISOMETRIC AXES

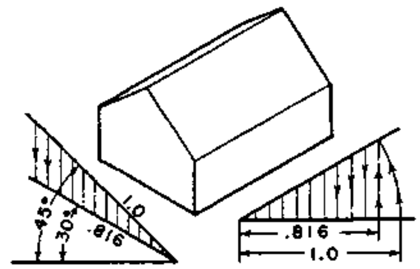

(B) ISOMETRIC PROJECTION

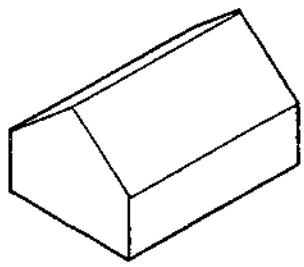
(C) ISOMETRIC DRAWING

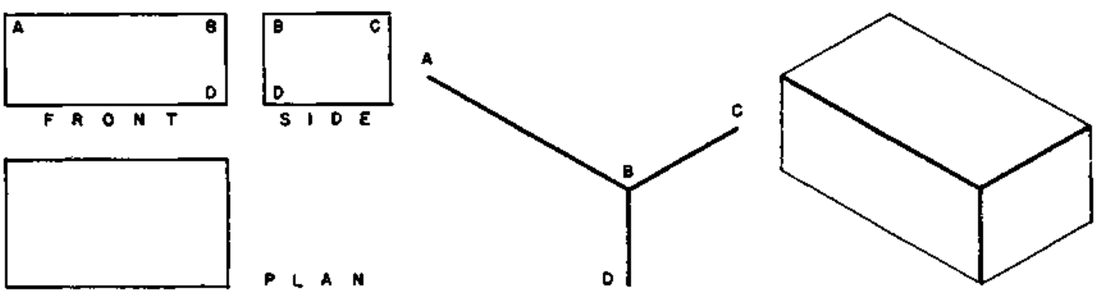

(A) MULTI-VIEW DRAWINGS (B) AXES LOCATED (C) OBJECT DRAWN

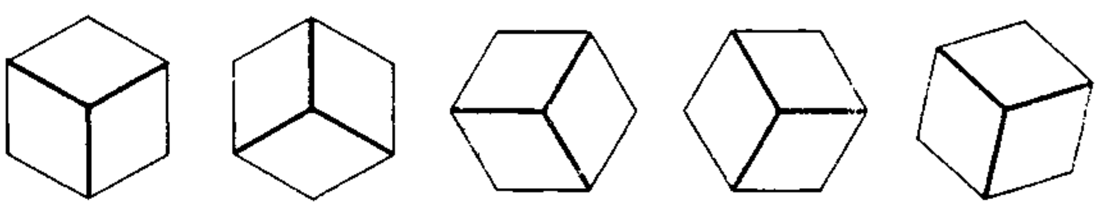
(A) ONE AXIS VERTICAL (B) (C) ONE AXIS HORIZONTAL (D) INCLINED (E)

AD II compiled : D.VOLKE AUG. '83	PICTORIAL DRAWING	ARCH. DRWNG. LECTURE CET 2o43/1 3.2 13
TCA TECHNICAL COLLEGE ARUSHA CHUO CHA UFUNDI ARUSHA	CIVIL ENGINEER. DEPARTMENT	13

ISOMETRIC CONSTR.METHODS

Isometric Contruction Methods:

- Offset method
- Box method
- Section

All steps are illustrated in the figure

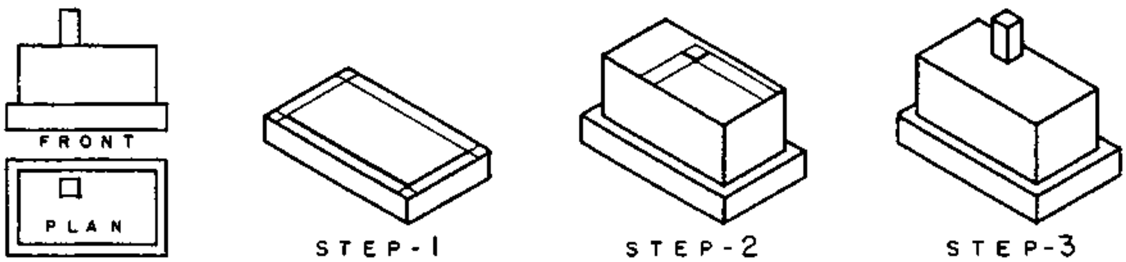

THE OFFSET METHOD

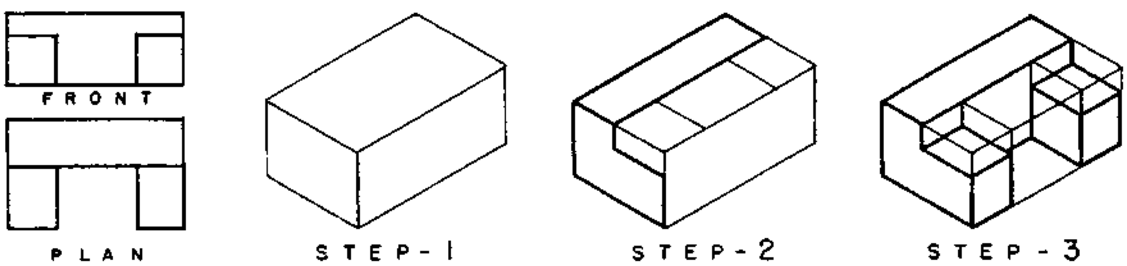

THE BOX METHOD

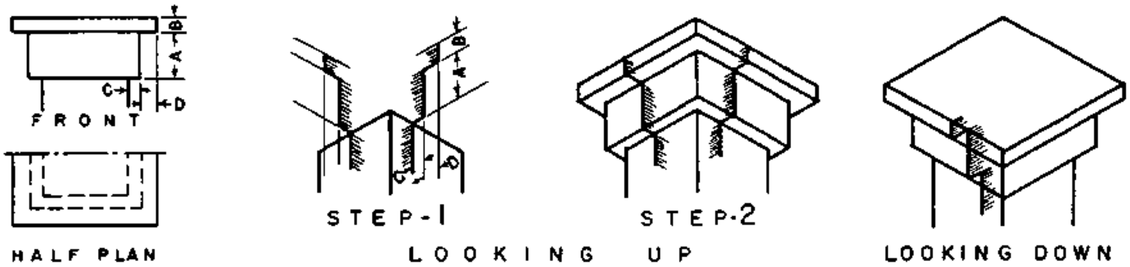

THE SECTION METHOD

EXAMPLES

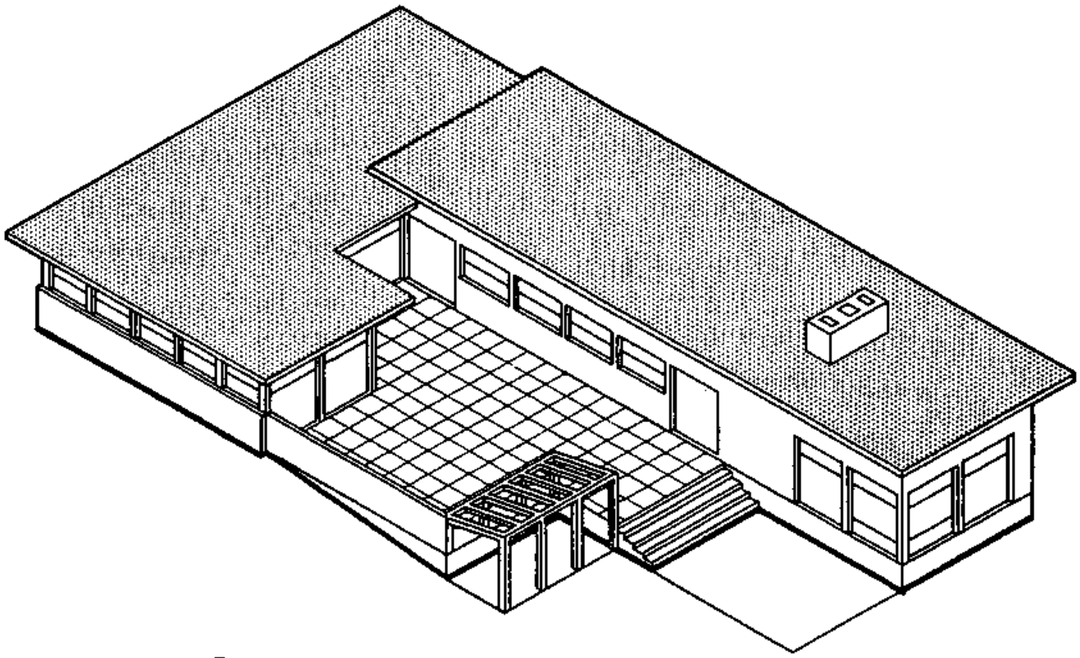

(A) EXTERIOR OF BUILDING

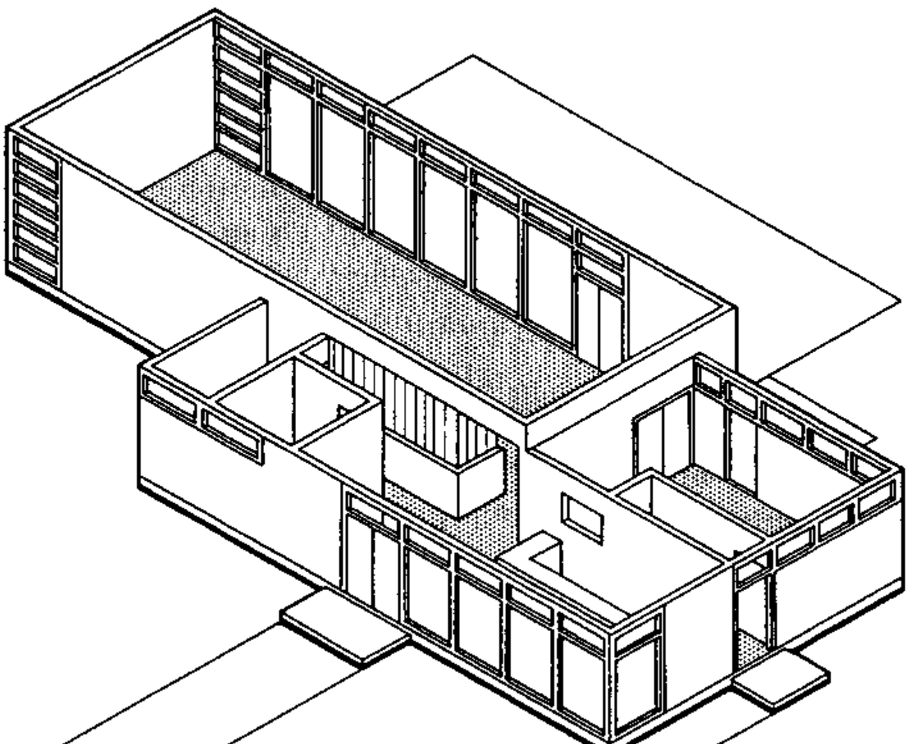

(B) VOLUMES BELOW CEILING

AD II compiled : D. VOLKE AUG. '83	PICTORIAL DRAWING	ARCH. DRWNG. LECTURE CET 2043/1 3.2.15
TCA TECHNICAL COLLEGE ARUSHA CHUO CHA UFUNDI ARUSHA	CIVIL ENGINEER. DEPARTMENT	15

DIMETRIC

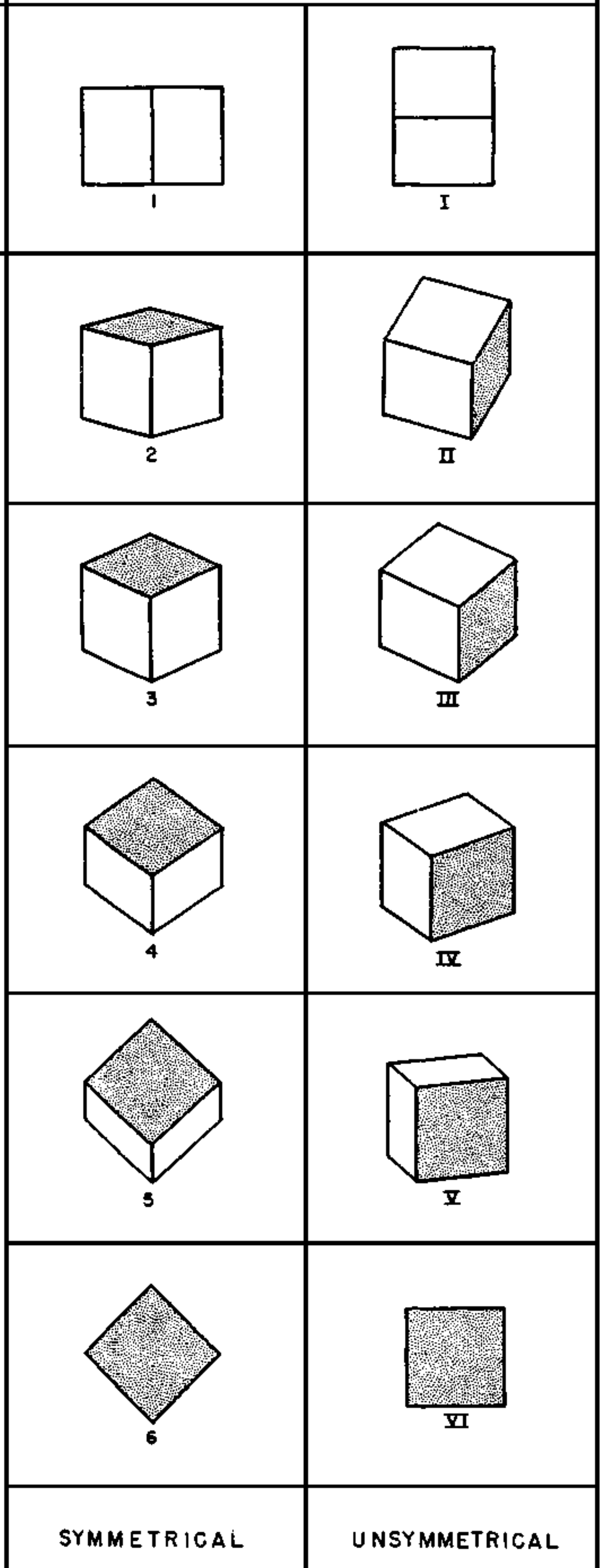

3.3. Dimetric Projection

The figure shows a cube placed so that the top and bottom are horizontal and the two visible sides make equal angleswith the picture plane. Imagine the cube to be rotated forward on a horizontal line which is parallel to the picture plane, thus keeping the sides allways at equal angles to the picture plane until the top is in a vertical position.
As the cube was rotated between these two positions the projections of its axes passed through all possible dimetric relations to each other. A few of the infinite number of possible dimetric positions obtained in this manner are illustrated in the figure.
In these illustrations the two equal axes are turned to make equal angles with a horizontal line. If one of these equal axes is turned vertically then the axes to either side will be at different scales and at different angles with a horizontal line.
Thus it is possible to use the same spacings of the axes that are shown in the left column of the figure and twist them to new positions with one of the two equal axes in a vertical position and get a new set of pictorial effects, such as are illustrated in the right column of the figure.
Dimetric drawings can then be made with the angles and scales giving either a symmmetrical or an unsymmetrical arrangement.

Isometric drawing is rigid and inflexible. There is only one possible view of the three typical planes which meet in any corner of the object because the exes must be equally spaced.

Because of its great varety of possible pictoral effects dimetric drawing overcomes the following faults and shortcomings of isometric drawings:

1) The lines of a hip roof and of equal projections of the near corner form parts of continuons vertical line in isometric drawing. This pictorial defect can be avoided in dimetric drawing by using the position of axes, which causes the two sides of the object to be turned at different angles to the picture plane.

2) One of the three typical planes of the object can be emphasized in dimetric drawing by turning the object so that this plane is seen more directly and consequently occupies a greater proportionate area in the drawing. The emphasis on one plane and subordination of the other two can be in any desired ratio.

3) Two of the planes of the object can be emphasized equally and the third subordinated. Thus, it is possible to subordinate the roof or floor area and emphasize the walls or to subordinate one wall. An example of subordination of roof areas and relatively increased importance of wall areas are shown in the figure. By showing less of the roof it is also possible to see more of the wall under an extending roof.

4) The unpleasant effect of wall planes at 45° in isometric projection can be avoided in dimetric drawing.

Dimetric drawing has the advantage of allowing the choice of a symmetrical or unsymmetrical view of the object and emphasis on one or two of the three planes. It permits variation in the pictorial effect obtained, while isometric drawing is rigig and inflexible.

A carefully chosen dimetric drawing usually gives the most pleasing results of any of the usable types of parallel line pictorial drawing. It ranks next to perspective in desirability for presentation work.

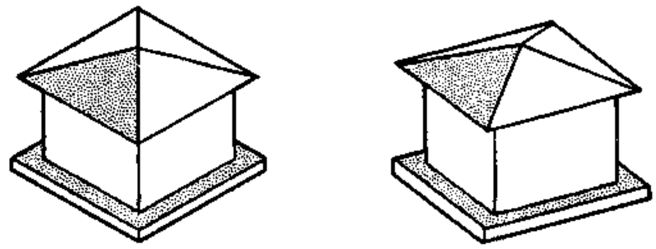

(A) NATURAL APPEARANCE OF CORNERS AND ROOF LINES

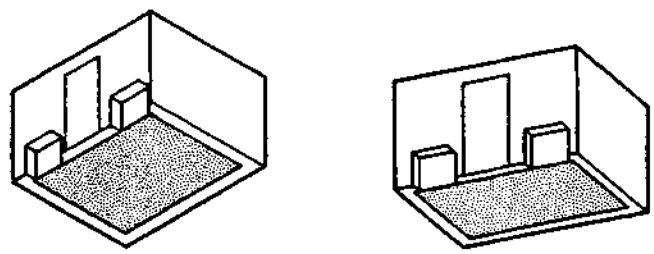

(B) EMPHASIS ON IMPORTANT WALL FLOOR AND ONE WALL SUBORDINATED

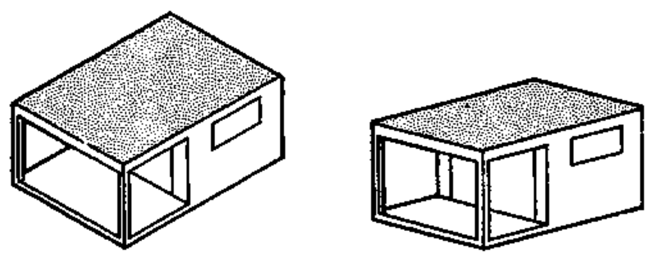

(C) EMPHASIS ON TWO WALLS ROOF AREA SUBORDINATED

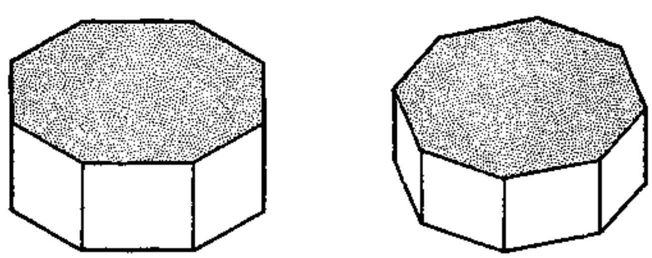

(D) CLEARER REPRESENTATION OF 45° WALL SURFACES

ISOMETRIC DIMETRIC

DIMETRIC SCALES & ANGLES

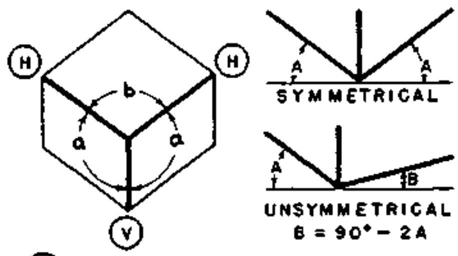

(A) THE RELATION OF SCALES AND ANGLES

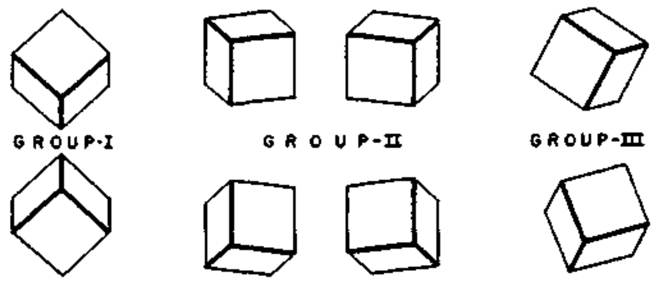

(B) POSITIONS OF THE AXES

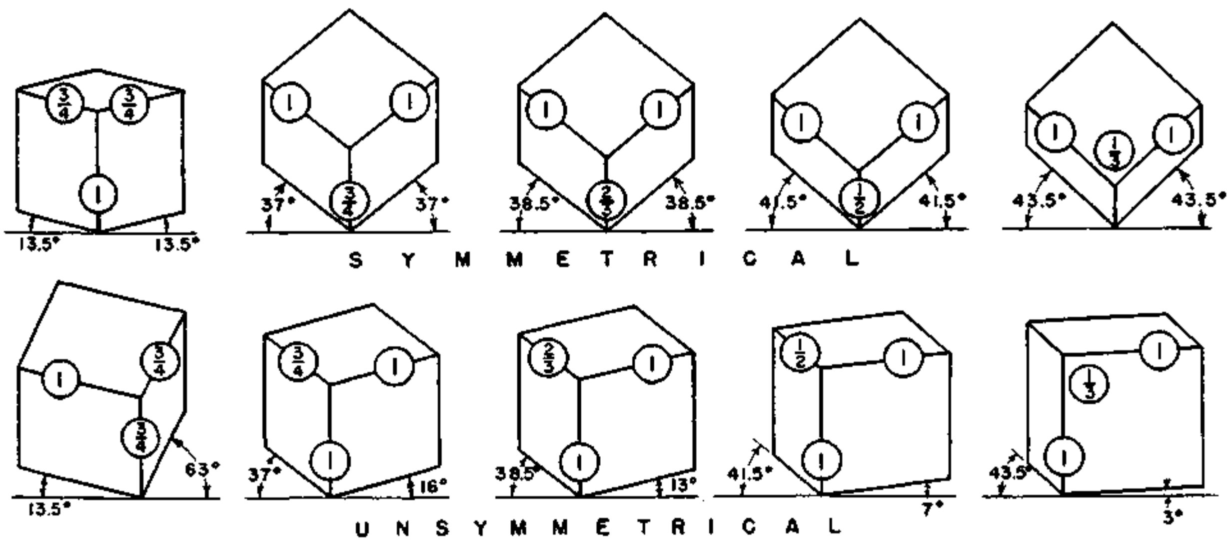

(D) SIMPLE FRACTIONAL SCALE RELATIONS

MAKING A DIMETRIC DRAWING

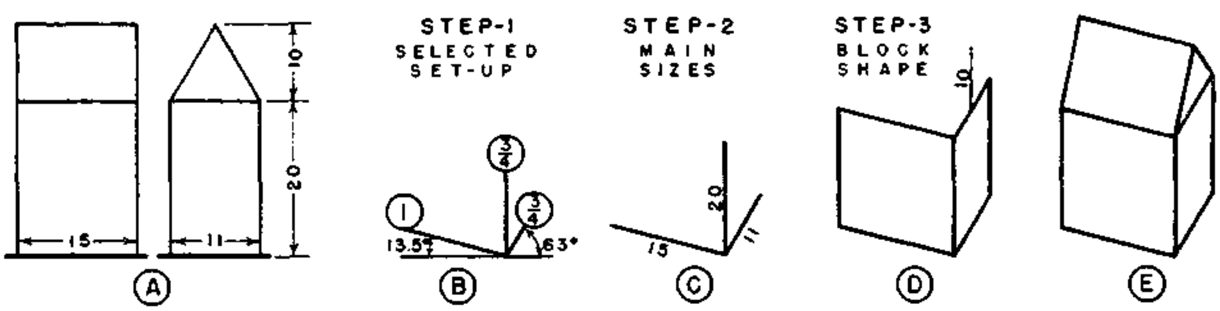

AD II compiled : D.VOLKE AUG. '83	PICTORIAL DRAWING	ARCH. DRWNG. LECTURE CET 2043/1 3.3 18
TCA TECHNICAL COLLEGE ARUSHA CHUO CHA UFUNDI ARUSHA	CIVIL ENGINEER. DEPARTMENT	18

EXAMPLES

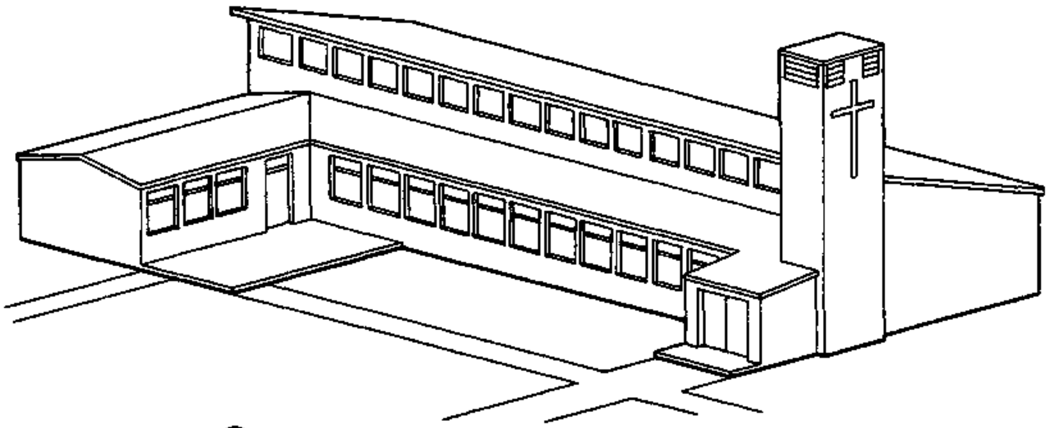

Ⓐ A VILLAGE CHURCH

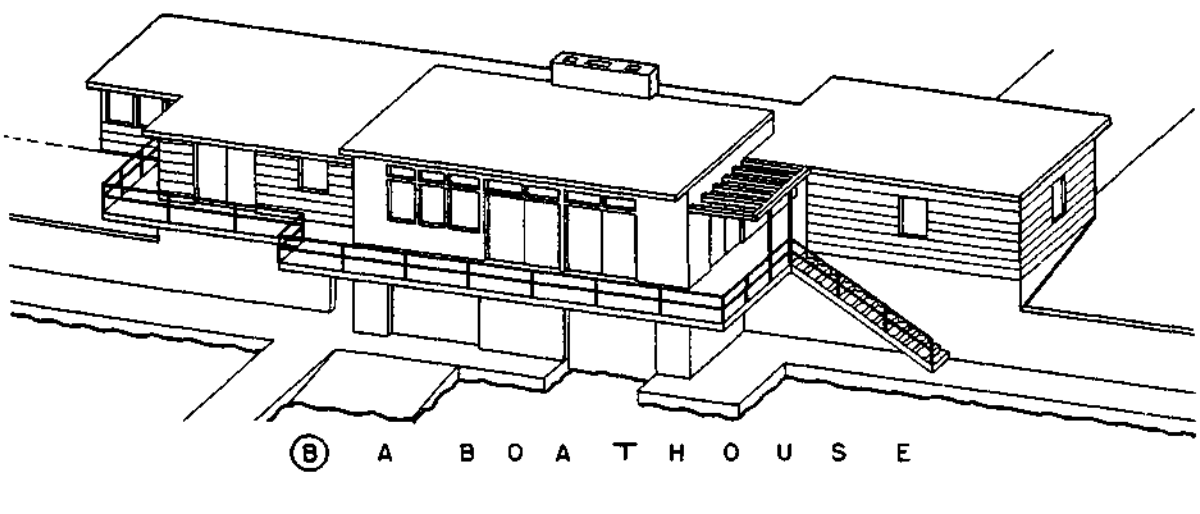

Ⓑ A BOATHOUSE

AD II compiled : D.VOLKE AUG. '83	PICTORIAL DRAWING	ARCH. DRWNG. LECTURE CET 2o43/13.319
TCA TECHNICAL COLLEGE ARUSHA CHUO CHA UFUNDI ARUSHA	CIVIL ENGINEER. DEPARTMENT	19

OBLIQUE

3.4 Oblique Projection

In oblique projection the projectors are oblique to the picture plane and the object is usually turned with one of the typical planes parallel to the picture plan (see fig. A)

In axonometric projection the projectors are perpendicular to the picture plane and the object has all three typical planes oblique to the picture plane. Thus, both the relation of the object to the picture plane and the direction of the projectors in oblique drawing differ from those of axonometric drawing.

Although the drawings M and O of figure A may be considered oblique drawings they are made with the projectors in planes parallel to one of the typical planes of the object and are neither good pictorial drawings nor charcteristic oblique drawings. Drawing N shows the characteristic oblique drawing in which the projectors are oblique to the three typical planes of the object. Fig. B shows these drawings as they would appear from in front of the picture plane.

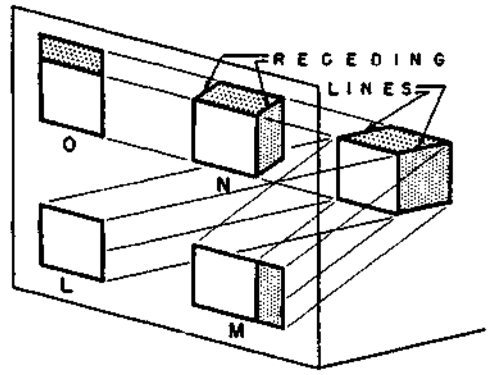

(A) PICTORIAL VIEW OF OBJECT AND DRAWINGS

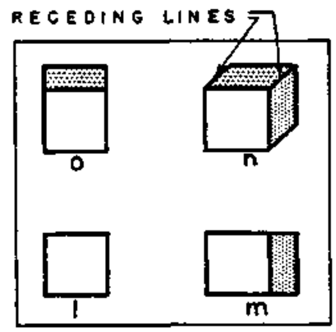

(B) DRAWINGS SEEN ON THE PICTURE PLANE

3.4.1 Length of Receding Lines

The angle of the projectors with the picture plane determines the length of the receding lines of an oblique drawing. If the projectors make an angle of 45^0 with the picture plane the receding lines will be projected in their true length.

From the end b of a given receding line a - b (fig. C) any number of projectors can be drawn making an angle of 45^0 with the picture plane. The intersections of these projectors with the picture plane will form a circle with the end 'a' of the line 'a-b' as a centre and the projectors will form a right cone with 'b' at the apex and 'a' at the centre of the base. The possible projections of the receding line 'a-b' radiate in all directions from the end 'a' of the line.

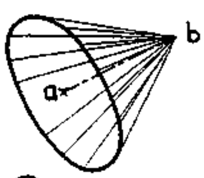

(C) PICTORIAL VIEW

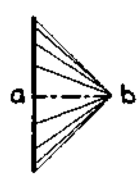

(D) SIDE VIEW

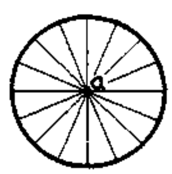

(E) FRONT VIEW

DIRECTION OF RECEDING LINES

Therefore a line can be drawn at any angle from a (fig. E), to represent the receding line 'a-b' in an oblique drawing, and the projection of the line 'a-b' will be equal to the length of the line itself if the projectors make an angle of 45^0 with the picture plane. By varying the angle of the projectors with the picture plane the receding lines can be made larger or smaller than scale size.

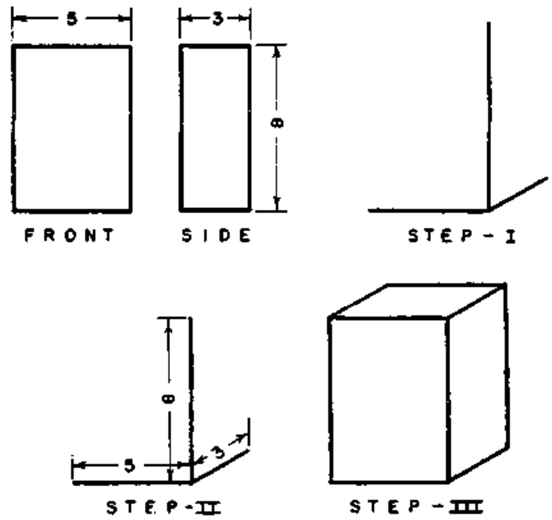

3.4.2 Construction of Oblique Drawings

The block shape shown in fig. A is drawn in oblique by proceeding as follows:

Step 1: Draw the horizontal and vertical axes and from their intersection lay out the receding axis at any desire angle.

Step 2: Lay out the dimensions of the object on the axis lines

Step 3: Draw lines from the measurements to complete the drawing.

Offset Method: The way of construction is illustrated in fig. B. Usually most measurements on an oblique drawing can be made on lines parallel to the axes. However, the planes of the object which are parallel to the picture plane appear in their true shapes and measurements can be made on them at any angle. Furthermore, any slanting lines which are parallel to the picture plane are drawn in their true directions and lengths.

3.4.3 Rules of Oblique Drawing

There are two rules of oblique drawing which should be followed when it is practical to do so (see fig. C)

Rule 1: Turn the length of the object parallel to the picture plane

Rule 2: Turn the most complex or characteristic face of the object parallel to the picture plane

The purpose of the first rule is to decrease the appearance of distortion by making the reciding lines represent the short dimension of the object.

The purpose of the second rule is to show the true shapes of characteristic forms of the object and simplify construction .

CONSTR./RULES

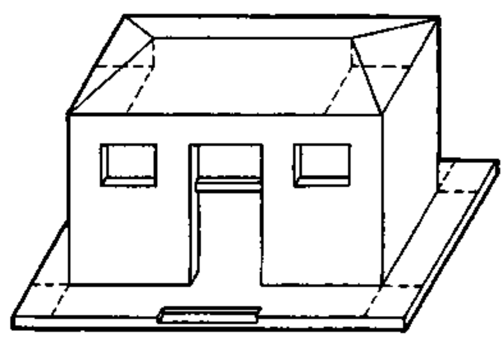

(B) OFFSET CONSTRUCTION

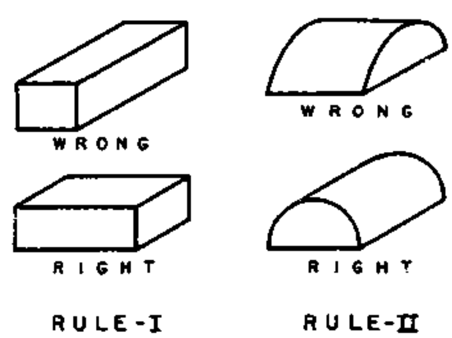

(C) SELECTING THE VIEW

SCALE

3.4.4 Scale of the Receding Lines.

Since the projectors can be at any angle with the picture plane the receding lines of an oblique drawing can be drawn at any scale.

The four drawings of the cube in the figure show the effect of different scales for the receding lines on the proportions of the drawings.

- The receding lines of the CAVALIER-PROJECTION in which the same scale is used on all lines, appear to be too long.

- The CABINET PROJECTION, with half-scale on the receding lines, has gone too far in the other direction, making the receding lines appear too short and the object appear thin.

When the scale of the receding axis is made 3/4 or 2/3 of the scale of the horizontal and vertical axes the proportions of the drawings are better.

Cavalier projection has the advantage of simplicity of contruction. The use of 3/4 or 2/3 scale on the receding lines gives a better pictorial effect.

One of these scales should be used when appearance is an important factor.

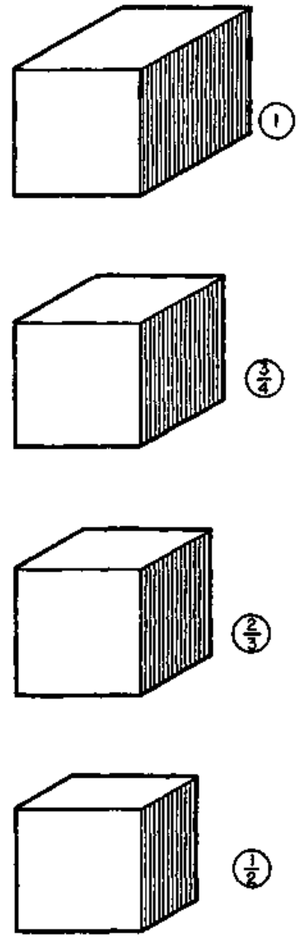

(A) CAVALIER PROJECTION TOO LONG

(B) IMPROVED PICTORIAL PROPORTIONS

(C) IMPROVED PICTORIAL PROPORTIONS

(D) CABINET PROJECTION TOO SHORT

DIRECTION

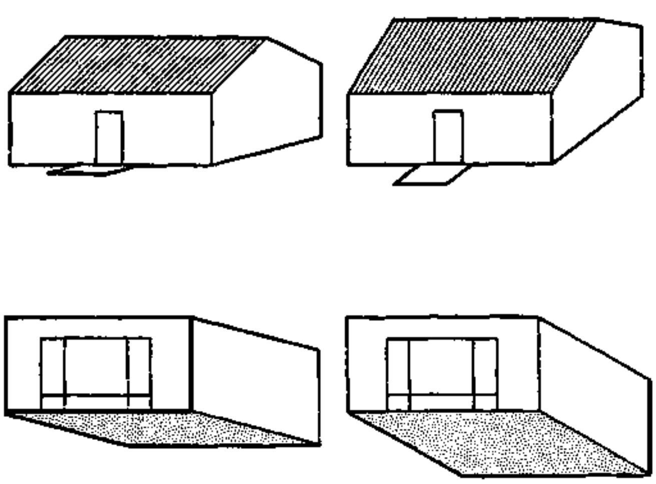

3.4.5 Direction of Receding Lines

Since the receding axis of an oblique drawing can be drawn in any direction it is possible to secure a great variety of pictorial effects. The figure shows three variations of direction of the receding lines for an exterior and an interior.

POSITION

3.4.6 Position of Axes

In all the preceding illustrations of oblique drawing one axis has been horizontal and another vertical.

However, the axes may be turned in any position, if two of the three are kept at 90° with each other.

In A: One axis is vertical, another horizontal
In B: The oblique axis is horizontal
In C: None of the axes is vertical or horizontal
In D: The oblique axis is vertical

The PLAN OBLIQUE axis position, shown in D, is often used in drawing pictorial views in which it is advantageous to have the picture plane horizontal and parallel to the floor plane. This position of the axis allows all horizontal areas to appear in their true forms.

For either interior or exterior designs having horizontal, circular or other complex forms this arrangement of the axes is to be recommended for simplicity of construction and for clearest representation of the shapes. With the oblique axis vertical, the other axes must remain at 90° with each other but may be turned in any desired relation to the vertical axis. The oblique lines (vertical) should be drawn at 2/3 or 3/4 scale.

(A) ELEVATION PLANE
TRUE SHAPE
ELEVATION OBLIQUE

(B) END TRUE SHAPE
RECEDING LINES
HORIZONTAL

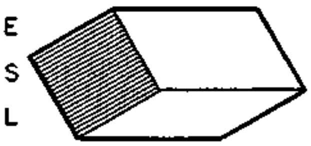

(C) INCLINED OBJECT
ALL OF AXES
OBLIQUE LINES

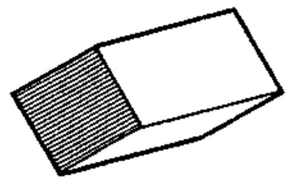

(D) PLAN PLANE
TRUE SHAPE
PLAN OBLIQUE

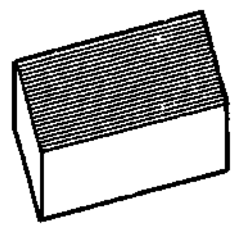

TRUE SHAPE PLANES ARE SHADED ON THIS PAGE

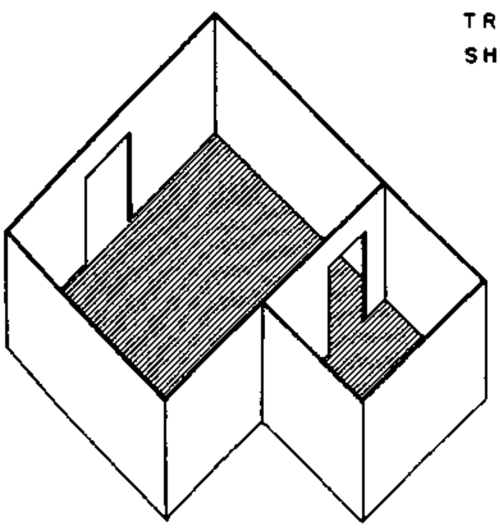

(A) ALL WALLS SHOWN

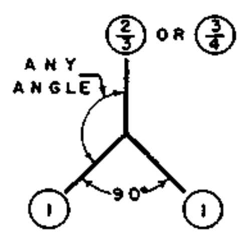

SCALE AND ANGLE DIAGRAM

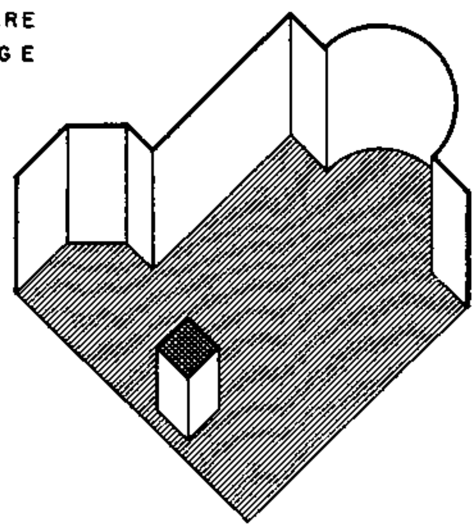

(B) NEAR WALLS OMITTED

EXAMPLES

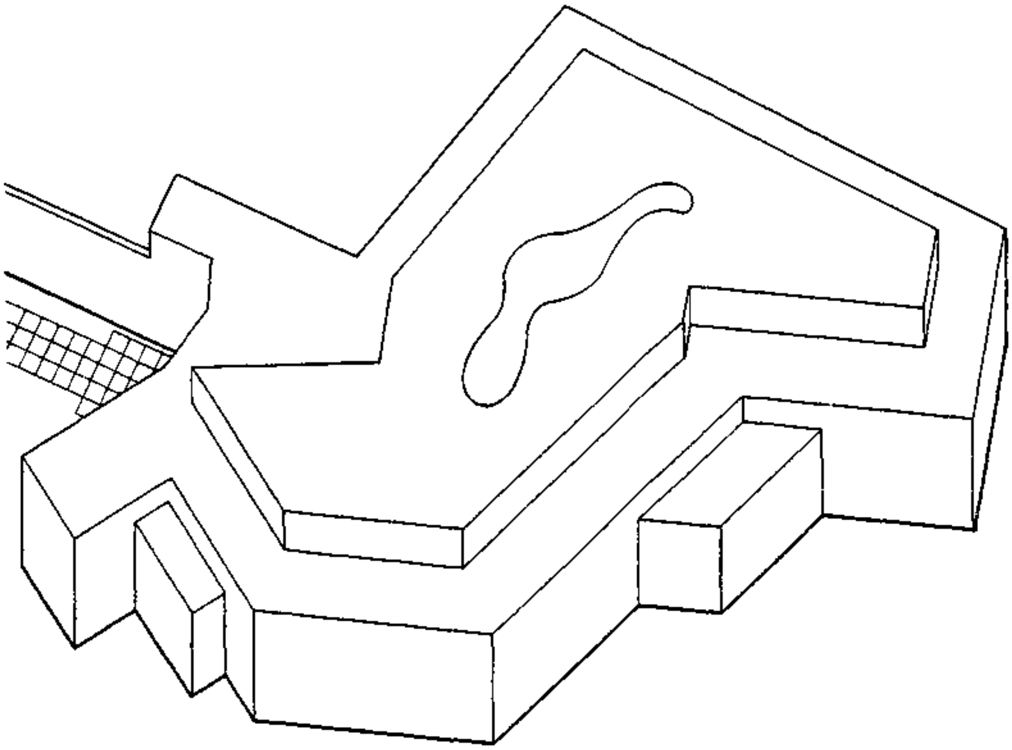

Ⓐ PLAN OBLIQUE OF AN AQUARIU

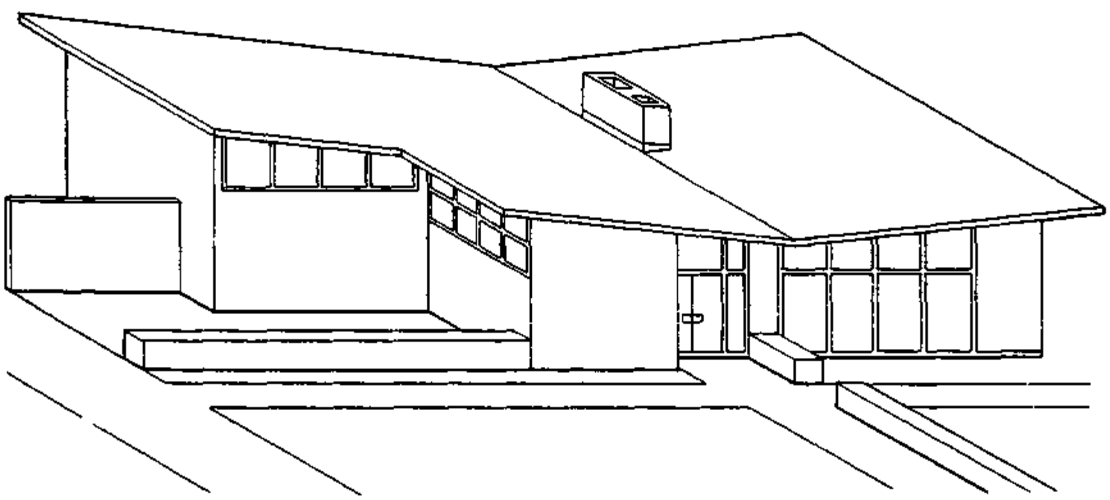

Ⓑ ELEVATION OBLIQUE OF A RESTAURANT

AD II	PICTORIAL DRAWING	ARCH. DRWNG.
compiled : D. VOLKE		LECTURE
AUG. '83		CET 2043/13.424
TCA TECHNICAL COLLEGE ARUSHA CHUO CHA UFUNDI ARUSHA	CIVIL ENGINEER. DEPARTMENT	24

4. PERSPECTIVE DRAWING

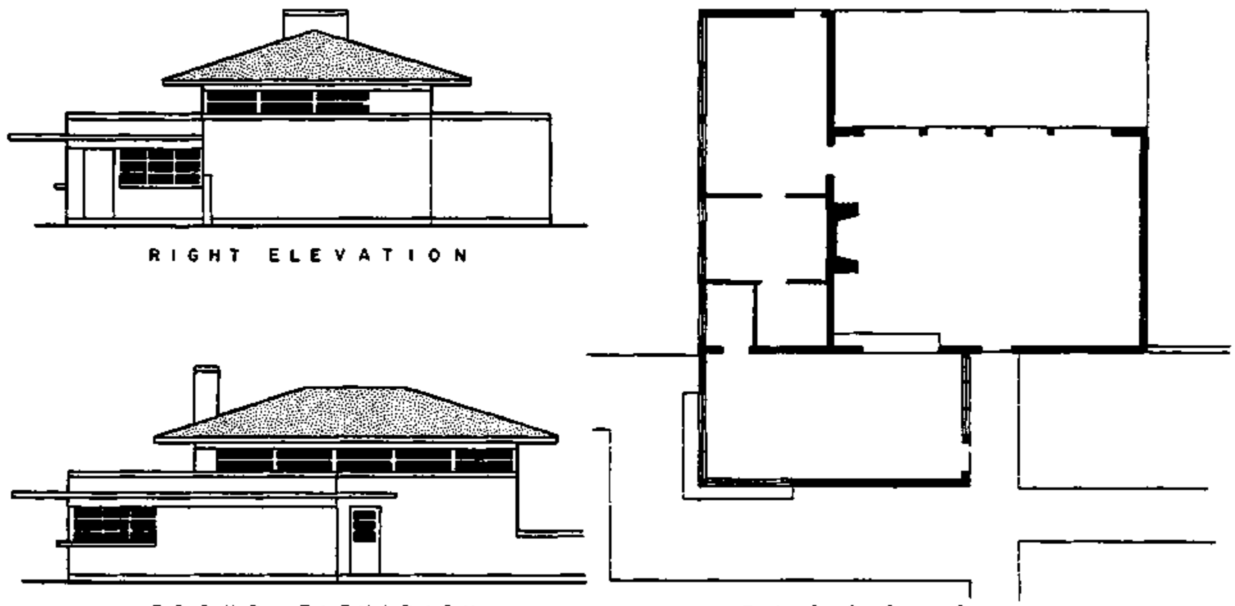

(A) MULTI-VIEW DRAWINGS

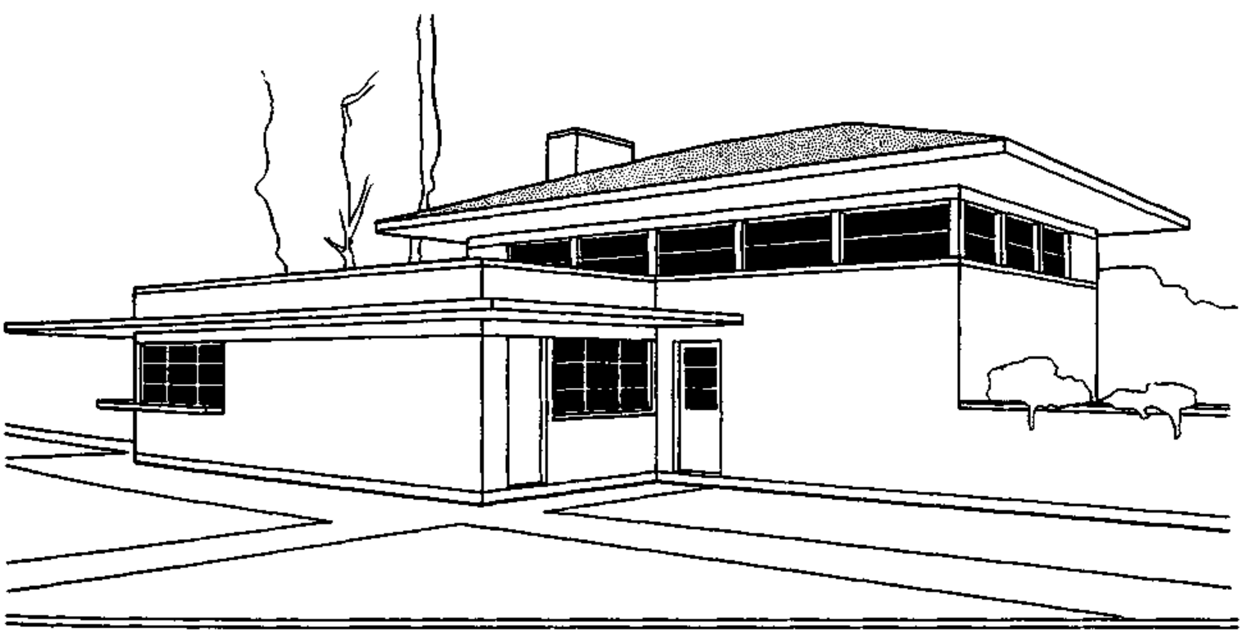

(B) PERSPECTIVE DRAWING

PERSPECTIVE

4. PERSPECTIVE DRAWING

Perspective drawing is essential in the work of the architect and designer, because it is the only type of drawing which represents an object in the natural and pleasing way that it would actually appear to the eye. In all other types of pictorial drawing all parallel lines are drawn parallel and produce the unpleasant illusion of becoming farther apart on the more distant parts of the object.

PERSPECTIVE is of value for:

1. drawings which can be easily understood by anyone,
2. an accurate method of studying and perfecting designs, and
3. explanatory sketches and drawings.

TERMS

4.1 Perspective Terms

STAND POINT (S.P.) is the position of the observers eye and is assumed to be the position from which an object is seen.

PROJECTORS. In perspective drawing the projectors converge to a station point instead of being parallel as they are in all other types of drawings.
Perspective projectors are imaginary lines of sight from the eye of the observer to points on the object.

PICTURE PLANE (P.P.) is an imaginary plane which intersect the perspective projectors in order to give points through which the perspective drawing is made, as though drawn on the picture plane.

VANISHING POINT (V.P.) is a point at which lines, not parallel to the P.P. appear to meet on the horizon line.

CENTRE OF SIGHT is the point at which the line of sight meets the P.P. and should be as near as possible to the centre of the object.

GROUND PLAN (G.P.) is the horizontal plane on which the object rests.

GROUND LINE (G.L.) is the intersection of the ground plane and the picture plane.

HORIZON LINE (H.L.) is the line parallel to the ground line and passing through the centre of sight on EYE LEVEL (E.L.).

PHENOMENA

4.2 Phenomena of Perspective Drawing

- Sizes.

In a perspective drawing sizes are shown as they appear to the eye from the position of the station point, NOT as they actually are.
The converging projectors reduce the perspective sizes of distant objects causing them to appear to be smaller than identical objects nearer the picture plane.
Objects in front of the picture plane are enlarged in the size by the projectors.

ONLY THE LINES IN THE PICTURE PLANE ARE DRAWN TO THEIR SCALE SIZES:

- Measurements.

Since lines of equal length on the object may appear in an infinite variety of sizes in a perspective drawing, it is impossible to measure sizes directly on the drawing exept in special cases. The determination of sizes, and especially of heights, is one of the most difficult features of making an perspective drawing.

Any lines of the object which lie in the picture plane can be measured to scale.
Parts of the object in front of the P.P. will be larger than scale size.
Parts of the object in the back of the P.P. will be smaller than scale size.

The various methods of perspective drawingobtain this correction of sizes in different ways.

- Shapes.

In perspective drawing the object is represented as it appears to the eye. Areas and angles usually do not appear in perspective as they really are.

Rectangles and squares are often drawn as irregular quadrilaterals with four unequal sides and four unequal angles.
A right angle seldom appears as such in a perspective but is drawn as an acute or otuse angle. A circle usually appears as an ellipse in perspective.

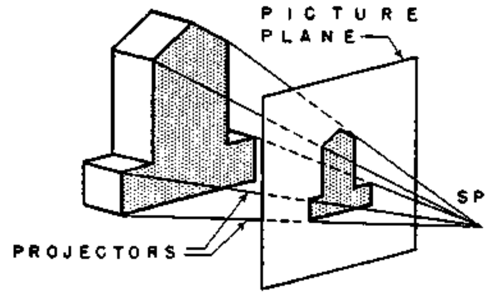

(A) CONVERGING PROJECTORS IN PERSPECTIVE

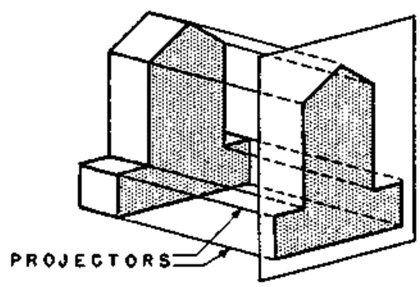

(B) PARALLEL PROJECTORS IN ALL OTHER DRAWING

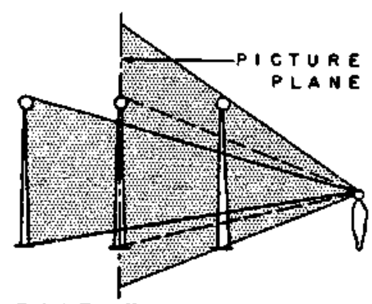

(C) EFFECT OF DISTANCE ON PERSPECTIVE

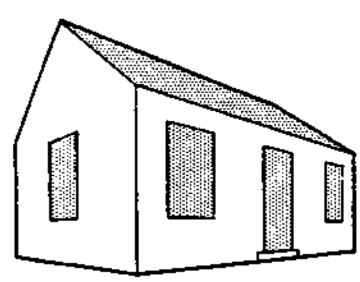

(D) VARIATIONS OF SIZE IN LINES AND AREAS

- Horizontal Surfaces.
The horizon is at the level of the station point in a perspective drawing. The eye looks up at things above the horizon and down on things below the horizon. Horizontal surfaces above the horizon (eye level) are visible from below and horizontal surfaces below the horizon. Such as steps, are visible from above. Thus, both the ceiling and floor of a room may be seen in the same perspective drawing, if the horizon line is located at some position between the floor and ceiling.
The size of a horizontal area in a perspective drawing depends on the distance and angle from which it is seen.
With the area at a constant horizontal distance from the station point, at the level of the horizon, a given horizontal area appears as a line and increases in visible size with its distance above or below the horizon.

When the height of a horizontal or vertical area is constant, its visible size increases as it approaches the station point and diminishes as it recedes farther from the station point.
Except that, whenever the line of vision passes through the plane of a surface the surface is always seen as a LINE. I.e.: any horizontal plane at the level of the horizon would always appear as a straight line.

- Lines Parallel to the Picture Plane.
These lines retain their true direction in perspective. Thus, horizontal and vertical lines parallel to the picture plane remain respectively horizontal and vertical. Sets of parallel lines which are parallel to the picture plane remain parallel perspective just as they do in orthographic projection.
However, the length of the parallel lines in perspective varies with the distance from the picture plane, instead of being projected in actual size relations.

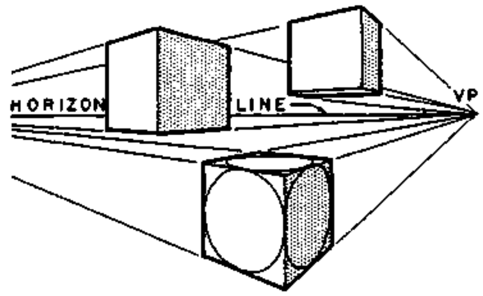

(A) APPEARANCE OF SHAPES OF AREAS AND MASSES

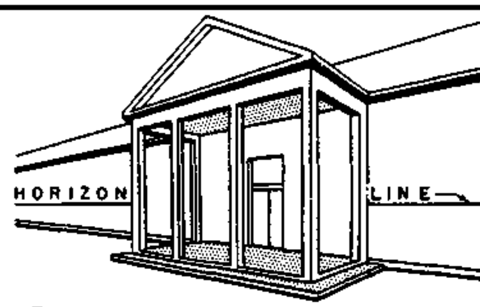

(B) HORIZONTAL AREAS IN PERSPECTIVE

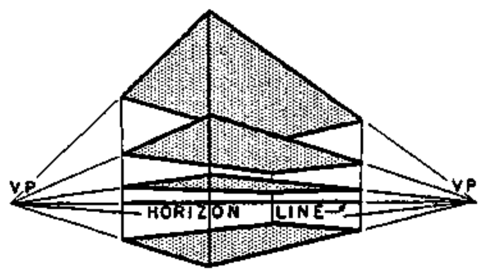

(C) EFFECT OF HEIGHT ON HORIZONTAL AREAS

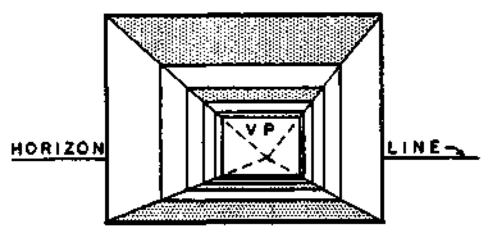

(D) EFFECT OF DISTANCE ON LINES AND AREAS

- Lines NOT Parallel to the Picture Plane.
In perspective each set of parallel lines which is not parallel to the picture plane converges to its vanishing point. The vanishing points of all sets of horizontal lines are located on the horizon, which is alsways on a level with the eye of the observer, the Station Point.

PERSPECTIVE SYSTEMS

(A) PLAN

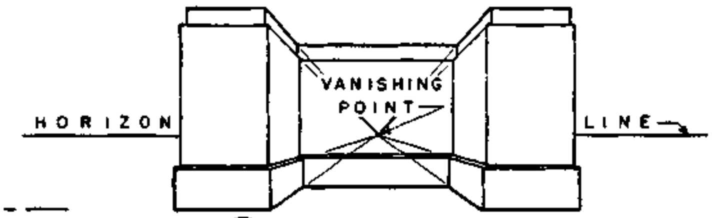

(B) PERSPECTIVE

PARALLEL OR ONE-POINT PERSPECTIVE SYSTEM

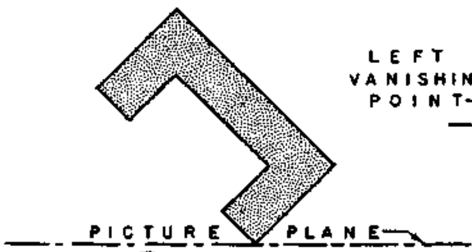

(C) PLAN

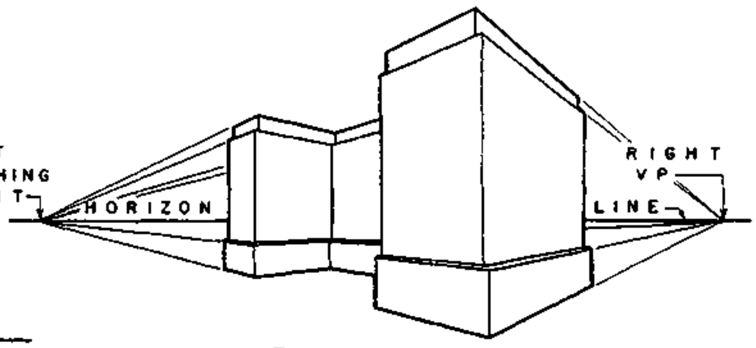

(D) PERSPECTIVE

ANGULAR OR TWO-POINT PERSPECTIVE SYSTEM

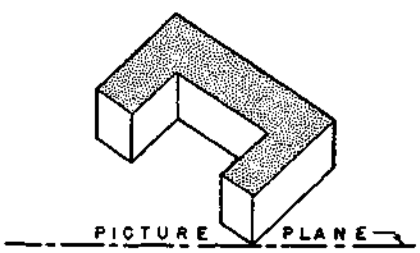

(E) PLAN

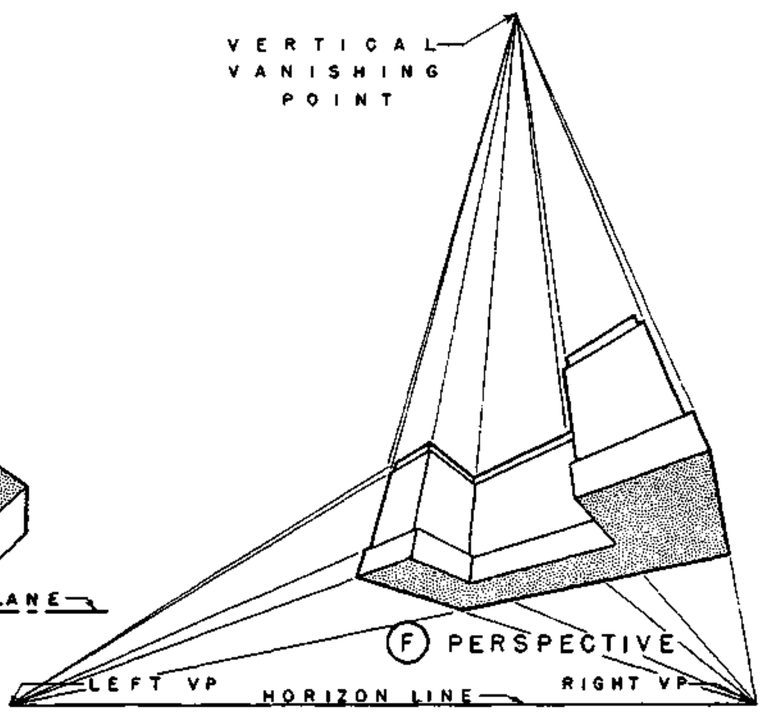

(F) PERSPECTIVE

OBLIQUE OR THREE-POINT PERSPECTIVE SYSTEM

SYSTEMS

4.3 Systems of Perspective Drawings.
There are three systems of perspective drawing which are classified according to the relation between the object and the picture plane and the resulting number of vanishing points for the three sets of typical lines.
Most buildings have as important elements three sets of planes which are illustrated by a box.
One of these sets of planes is horizontal (top and bottom). The other two are vertical and at right angles to each other. These planes meet in the three sets of typical lines of which one set is vertical and the other two horizontal and at right angles to each other.
In the PARALLEL or ONE POINT perspective system one set of planes and two sets of lines of the object are parallel to the picture plane, Fig. A. Lines of these two sets remain respectively vertical and horizontal in perspective, Fig. B. The remaining set of horizontal lines is perspendicular to the picture plane and vonverges to a vanishing point.
In the ANGULAR or TWO POINT perspective system the object is turned with both sets of horizontal lines at an angle to the picture plane, as shown in the plan of Fig. C. There are, therefore, two vanishing points, one for each of these sets of horizontal lines, Fig. D. Since the vertical lines are parallel to the picture plane they remain vertical and parallel in the perspective.

In the OBLIQUE or THREE POINT perspective system the object is turned, or the picture plane tilted, so that none of the three sets of typical planes and lines of the object is parallel to the picture plane, plan Fig. E.Since all three sets of lines are at an angle to the picture plane, there are three sets of converging lines and three vanishing points, as shown in Fig. F.
The three vanishing points of the typical sets of lines are the only ones mentioned in this discussion of systems of perspective drawings. However, vanishing points of other sets of parallel lines are sometimes useful. Their location and use will be explaned later.

METHODS

4.4 Methods of Perspective Drawings.

A perspective of an existing object can be sketched on a picture plane made of a sheet of glass in the following manner:Place the picture plane at arms length, keep the eye in one position, and draw lines to exactly cover the lines of the object as seen through the stationary picture plane (see fig.). A window glass makes an excellent picture plane for this purpose. Whenever the object ist not conveniently located, when greater accuracy is required, or when there is no existing object but only the drawings of some proposed structure, it is necessary to use some other method of making the perspective. However, the various drafting methods of making perspective drawings are based on this method of sketching the perspective of an existing object on a transparent plane.
A perspective drawing is made by working out by one of the drafting methods the positions of the lines of the object as they would appear on a given picture plane from a given station point. Three of these mechanical methods of constructing perspective drawings:

1) the direct projection method
2) the perspective plan method
3) the common method.

These methods are described in a general way in the following paragraphs and are explained in detail in the chapters on one- and two-point perspective.

METHODS

THE DIRECT PROJECTION METHOD has the simplest theory of any method of perspective drawing. Plan and elevation views parallel to the picture plane showing the object, picture plane, and station point are first drawn the fig. The converging projectors are then traced to the picture plane in plan and elevation. Points on the perspective drawing are located from their heights, which are determined from the projectors in plan. The drawings are so arranged that the heights can be carried across horizontally with the T-square and the widths brought down vertically with the triangle to their positions in the perspective from the intersections of the projectors with the picture plane.

The direct projection method is a good method for one-point perspective because the auxiliary drawings used are the plan and elevations, or sections. These drawings are easily understood by the draftsman, and are often available at the correct scale. In two-point perspecktive one or two special drawings are required for the direct projection method. These drawings are auxiliary elevations or sections from a corner (parallel to the picture plane) and are more difficult to construct and understand than the ordinary elevations and sections. If this method is used without vanishing points very slight inaccuracies will change the directions of short lines and produce a warped effect. This method requires a great deal of space on the drafting board and many construction lines. Although vanishing points are not required their use will simplify the construction and make the drawing more accurate.

THE PERSPECTIVE PLAN METHODallows the entire perspective to be constructed from measurements made in the picture plane and broght into correct perspective sizes and positions by tracing line to their vanishing points. The plan is first drawn in perspective. The vertical lines of the perspective drawing are then obtained by drawing

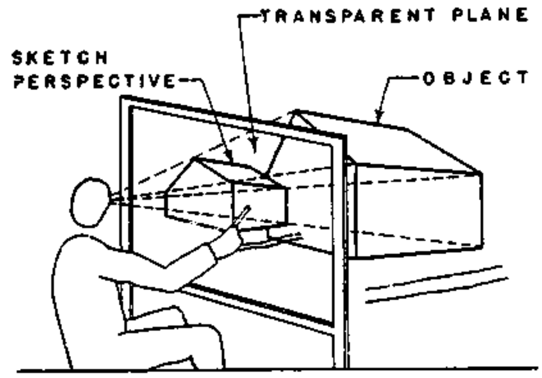

SKETCHING A PERSPECTIVE

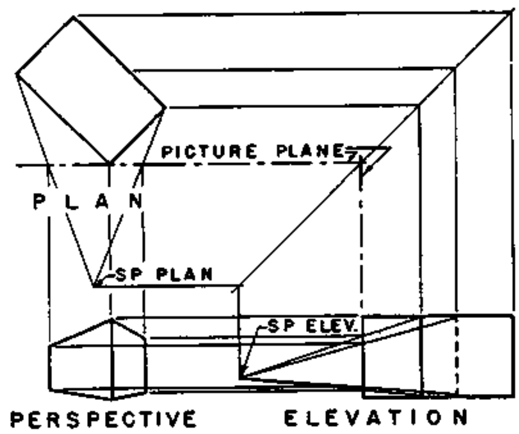

DIRECT PROJECTION METHOD

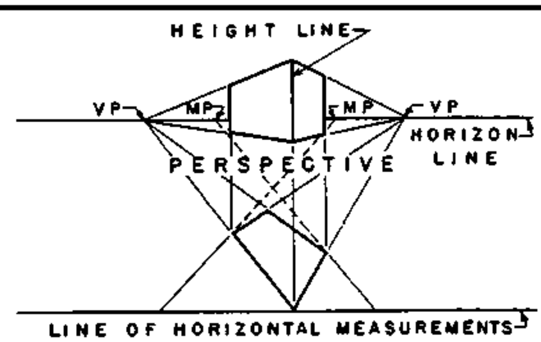

PERSPECTIVE PLAN METHOD

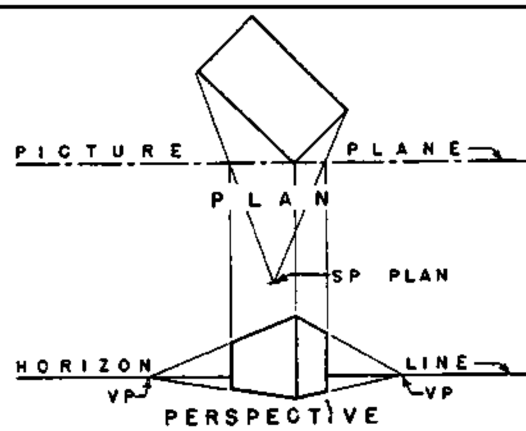

COMMON OR OFFICE METHOD

METHODS

vertically from the perspective plan. The scale heights are laid out on any convenient vertical line in the picture plane from which they can be traced by lines toward the vanishing points into their correct perspective positions.

Since this method divides the construction into two steps, the construction lines are easier to trace to the perspective. In addition to the vanishing points of the sets of typical lines not parallel to the picture plane, the perspective plan method requires one or more measuring points to be used in drawing the perspective plan. A measuring point is the vanishing point for the set of parallel lines , which transfers scale measurements of horizontal dimensions from the horizontal measuring line to a base line of the perspective plan. The location and use of measuring points is explained under one- and two-point perspective.

The perspective plan can be drawn at any convenient height either above or below the perspective drawing. It can be placed on an important plane of the perspective, such as the floor of an interior or ground plane of an exterior. It is practical and sometimes very convenient to use more than one perspective plan for tall buildings. The perspective plan method requires less space on the drawing board than any other widely used method and is considered the best method by some expert draftsmen.

THE COMMON METHOD is also called the OFFICE METHOD and the MIXED METHOD. It combines the plan construction for horizontal spacing of vertical lines of the direct projection method and the height contruction of the perspective plan method.(Fig.) It is widely used in offices and schools. One reason for its popularity is that plans and elevations which are available at the correct scale may be attached to the drawing board and used as auxiliary drawings from which the perspective is made.

CHOOSING A METHOD Each of these methods of making perspective drawings has advantags and disadvantages. Som problems are more easily solved by one method, some by another. This is partly due to the varying nature of designs, and partly because of the information furnished by available drawings of the object of which the perspective is to be made. All accomplish the same result - a true picture of the object from some chosen position.

TWO-POINT PERSPECTIVE

4.5 TWO-POINT PERSPECTIVE

Two - point perspective is the most widely used of the three perspective systems. It is typical of the way in which buildings are usually seen and of photographs of buildings. It is, therefore, of greatest importance to the architect and draftsman. When only one kind of perspective is to be learned twopoint perspective is in most cases the one.

THE COMMON METHOD. The most popular and most widely used method of two-point perspective is called the common method. In this method the plan of the object, picture plane, and station point is used to work out the horizontal spacing of points, and vertical lines for the perspective. The plan is turned with the line of the picture plane horizontal. It is convenient to have an elevation at one side of and below the plan. From this elevation the heights can be carried across with the T-square to the construction for the correct heights for the perspective. Any elevation, or section, or part of either drawing which gives all of the heights necessary to construct the perspective drawing will serve for this purpose. Although it is not necessary to have an elevation or section included in the construction its use makes the construction more easily understood, decreases the chance of error in working out heights, and makes the checking of construction easier.

THE CONSTRUCTION OF A SIMPLE TWO-POINT PERSPECTIVE.
The construction by the common method has been divided into a series of steps, illustrated in fig. A,B, and C, These steps are typical of the procedure followed in this method of two-point perspective.

- THE AUXILIARY DRAWINGSare a plan and elevation. The plan of the object, picture p lane, and station point is drawn with the picture plane line horizonal (fig. A). The elevation is drawn and the horizon line and ground line placed to suit it.

The horizon line is at the height of the eye of the observer. The ground line is drawn at the bottom of the elevation. The station point should be approximately on a line perpendicular to the picture plane through the center of the plan.

- THE VANISHING POINTS are located on the horizon line in the following manner (fig. B). From the station point SP lines are drawn parallel to the two typical sets of horizontal lines of the plan to meet the picture plane. From these intersections A and B vertical linesare drawn to the horizon to locate the two vanishing points, VL and VR. All of the horizontal lines of the object which are parallel to the line SP-B in plan vanish in VR in the perspective drawing. Likewise, all of the horizontal lines of the object which are parallel to the line SP-A in plan vanish in VL in the perspective drawing.

- MAKING THE PERSPECTIVE requires the use of a plan and elevation. The horizontal spacing of all points and vertical lines of the perspective drawing are obtained from the plan. This is done by drawing lines from the necessary points on the plan toward the station point to meet the picture plane, then drawing vertical lines from these intersections to the perspective (Fig. C.).

Since the nearest corner of the wall is in the picture plane its height is laid out to scale by drawing horizontal lines from the top and bottom of the wall in elevation to the line of the corner in the perspective. From these height measurements lines are drawn to VR to locate the top and bottom of the right side. Likewise, lines are drawn to VL to locate the top and bottom lines of the left side.
The illustrations of Fig. A, B, and C show the elementary principles of two - point perspective by the common method.

THE COMMON METHOD

(A) STEP ONE
THE AUXILIARY
DRAWINGS

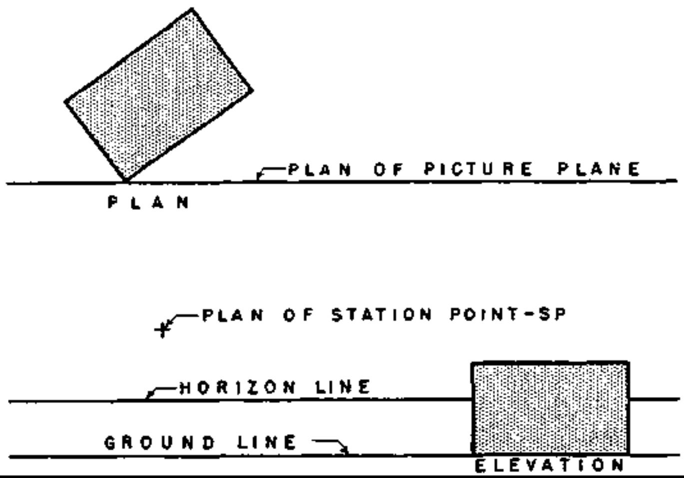

(B) STEP TWO
LOCATING THE
VANISHING POINTS

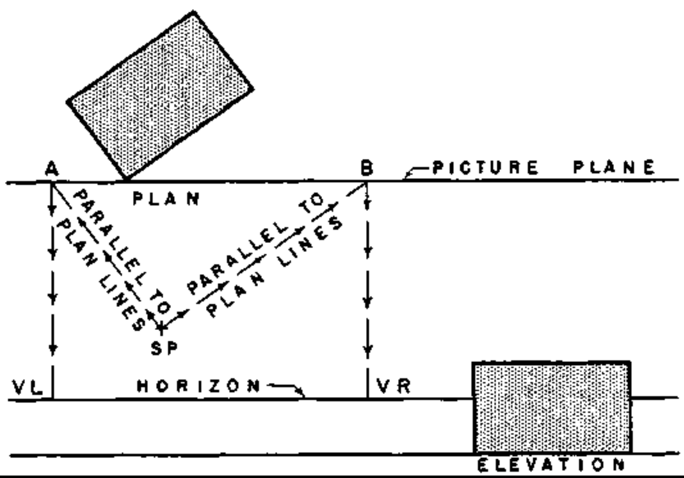

(C) STEP THREE
MAKING THE
PERSPECTIVE

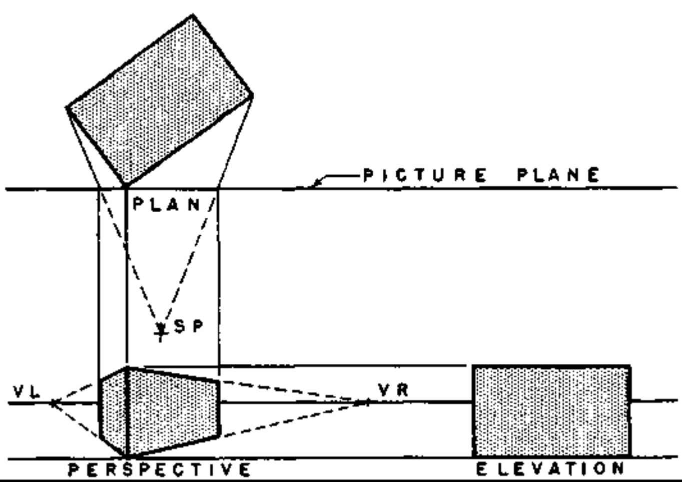

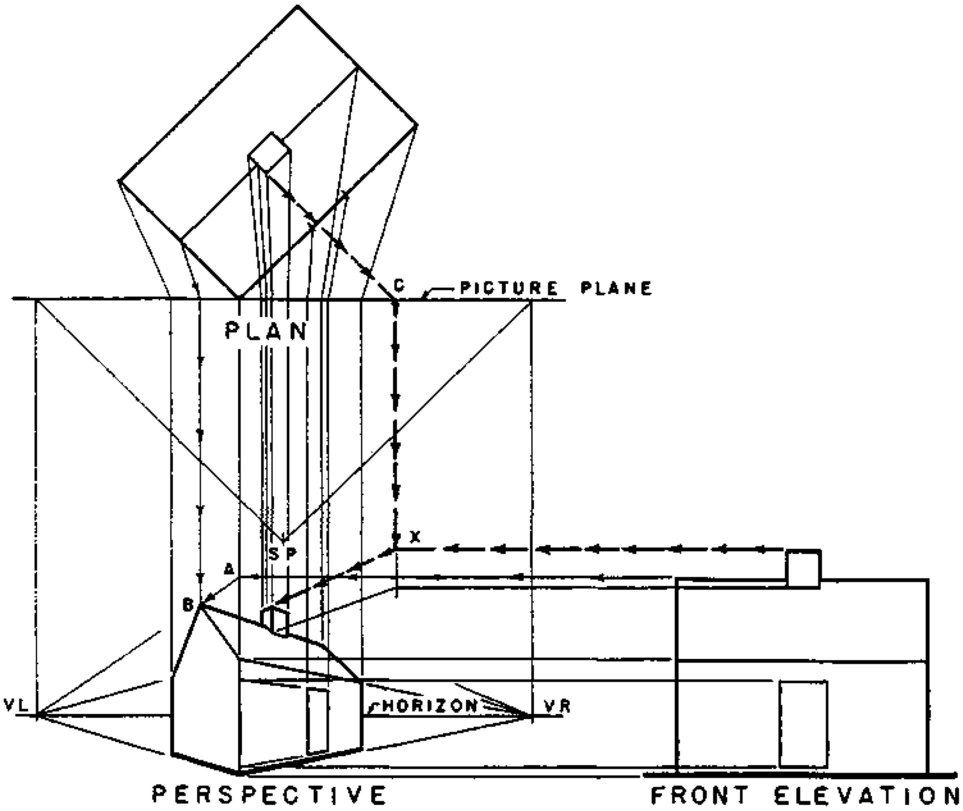

TWO-POINT PERSPECTIVE OF A SIMPLE EXTERIOR

- THE DETERMINATION OF HEIGHTS.

Two important facts should be kept in mind while studying the following illustrations:

1. All heights are laid out to scale in the picture plane only,
2. Heights are carried from their scale sizes in the picture plane into correct perspective positions by tracing them along lines which vanish in the vanishing points and lead to the on the object where the heights are used.

- THE LOCATION OF THE STATION POINT.

The pictorial effect obtained in a perspective drawing is determined by the position of the station point. Since it would be possible to have the eye of the observer in any one of an infinite number of positions in viewing an object it is possible to have an infinite number of different perspective drawings of the object.

The location of the station point can be varied in three ways:
1. distance from the object
2. height
3. angle of view.

These variations and their effects on the perspective are discussed in the following paragraphs. The general theory applies to interiors as well as exteriors.

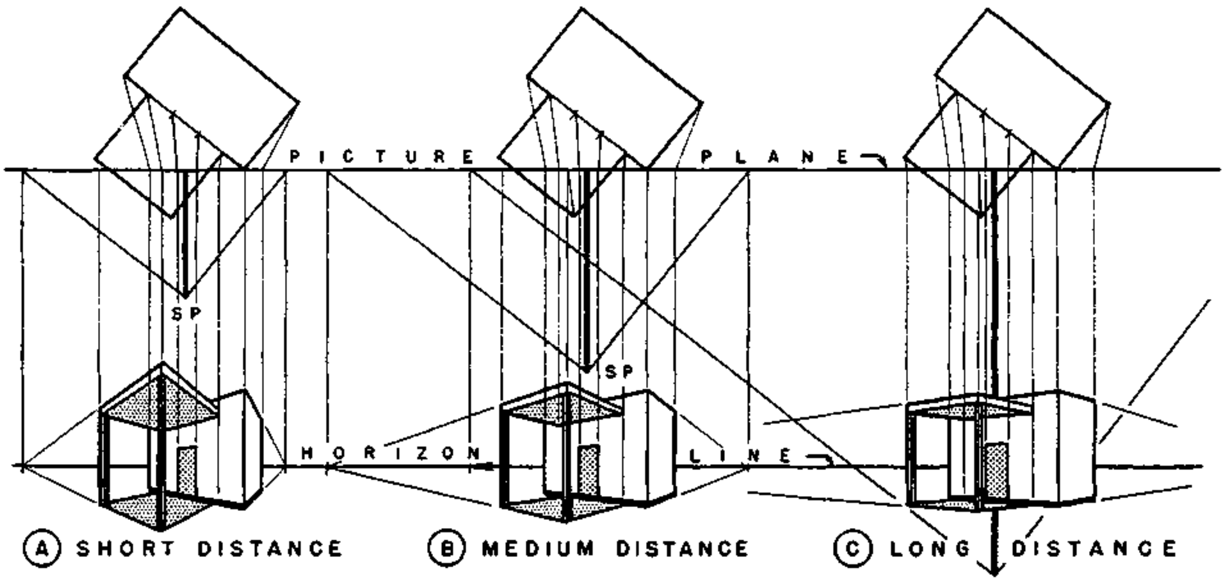

DISTANCE FROM STATION POINT TO OBJECT

THE DISTANCE FROM THE STATION POINT TO THE OBJECT influences the pictorial effect and size of the perspective. When the station point is near the object the horizontal lines not parallel to the picture plane slant sharply (Fig. A). As the distance from the object is increased the horizontal lines flatten out and the perspective approaches the form of an elevation perpendicular to the picture plane in which all horizontal lines are parallel and horizontal (Fig. B and C). Parts of the object which are in front of the picture plane become smaller as the distance from the object to the station point increases, and parts behind the picture plane become larger. Both approach scale size as the distance increases and conversely, both vary more from scale size as the distance diminishes. When the station point is near the object the bottoms of horizontal surfaces above the horizon are large, as are the top surfaces of horizontal areas below the horizon. As the station point moves farther away these areas become smaller and disappear from view when the station point is at infinity (Fig. A,B, and C).

The maximum angle of vision of the eye is usually assumed to be 45^0 or 60^0. This angle should include everything shown in the perspective. When the height of the object is greater than its width the height will determine the angle of vision. In one-point perspective the limit of vision is considered to be a cone of rays from the eye, thus avoiding the distorted effect sometimes found in the corners of one-point perspectives. To avoid excessive distortion in perspectives of spheres and circles, these shapes should be kept within a 30^0 cone of vision in any type of perspective.

As a practical consideration the farther the station point is located from the object, the greater the distance from the drawings to the various centers of converging lines. It is usually desired that these centers be in reach of the T-square for drawing lines and that they be on the area of the board. When the picture effect of the perspective is entirely satisfactory it is more convenient to keep all centers of converging lines on the board.

THE HEIGHT OF THE STATION POINT determines whether the object is seen from above, below, or from its own level in the perspective drawing. The relation of the station point, vanishing points, and horizon is constant for varying heights of the station point if the distance from the picture plane to the station point and the angle between the object and picture plane are constant. The perspective position of the station point is always on the horizon when the picture plane is vertical. The picture plane is alsmost always vertical in one- and two point perspective. The vanishing points of horizontal lines are always found on the horizon. When the eye of the observer (SP) moves up or down, the horizon and VP`s of the horizontal lines move with it. The distance from the horizon to the ground line is the height of the eye of the observer above or below the base of the building. Fig. A, B, and C uses the same position of the horizon, SP and VP`s but uses three different distances to the ground line, so that the view in the center has the SP opposite the center of the object, while the other two have the SP above or below the object. The relation of the horizon and ground line then determines whether the perspective is a view from below (A), normal perspective (B) or an aerial view (C).

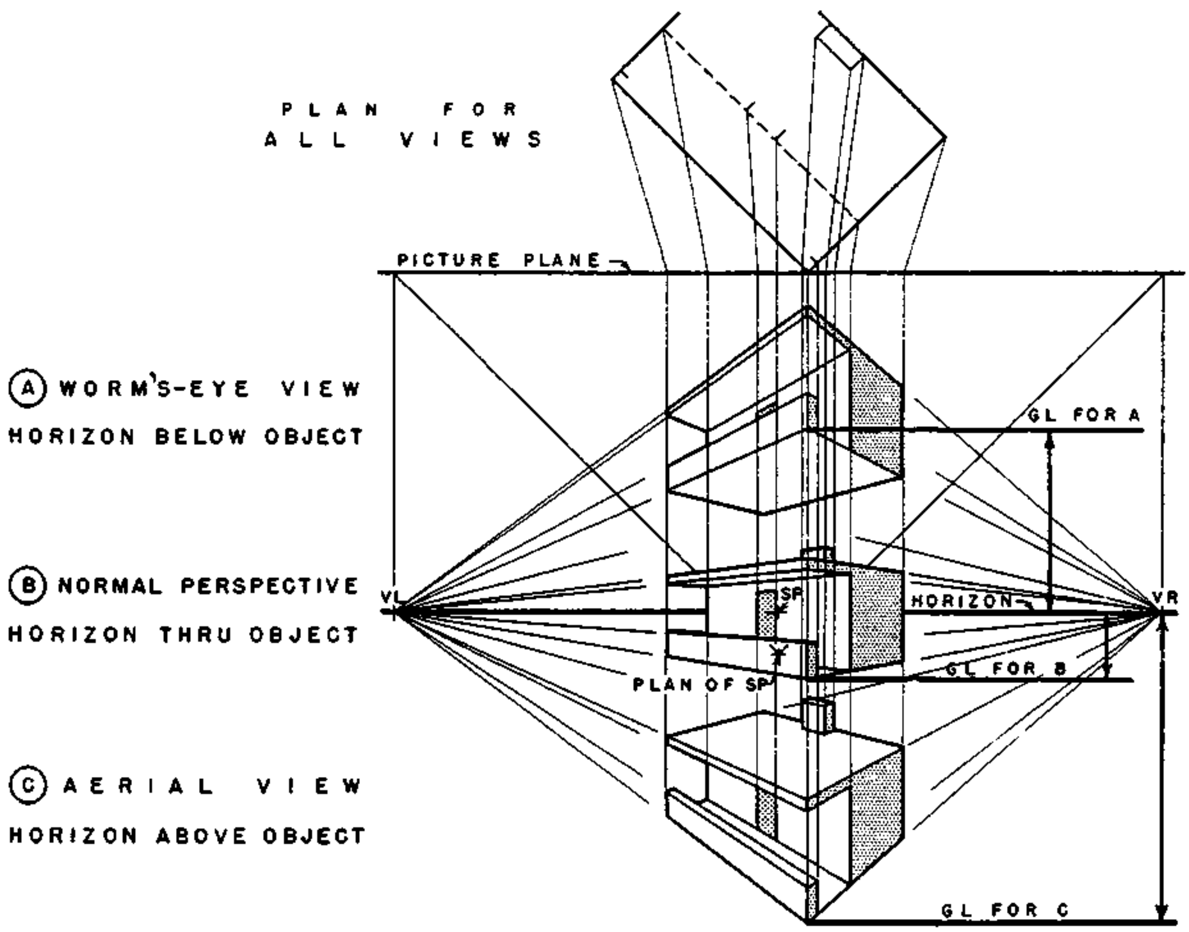

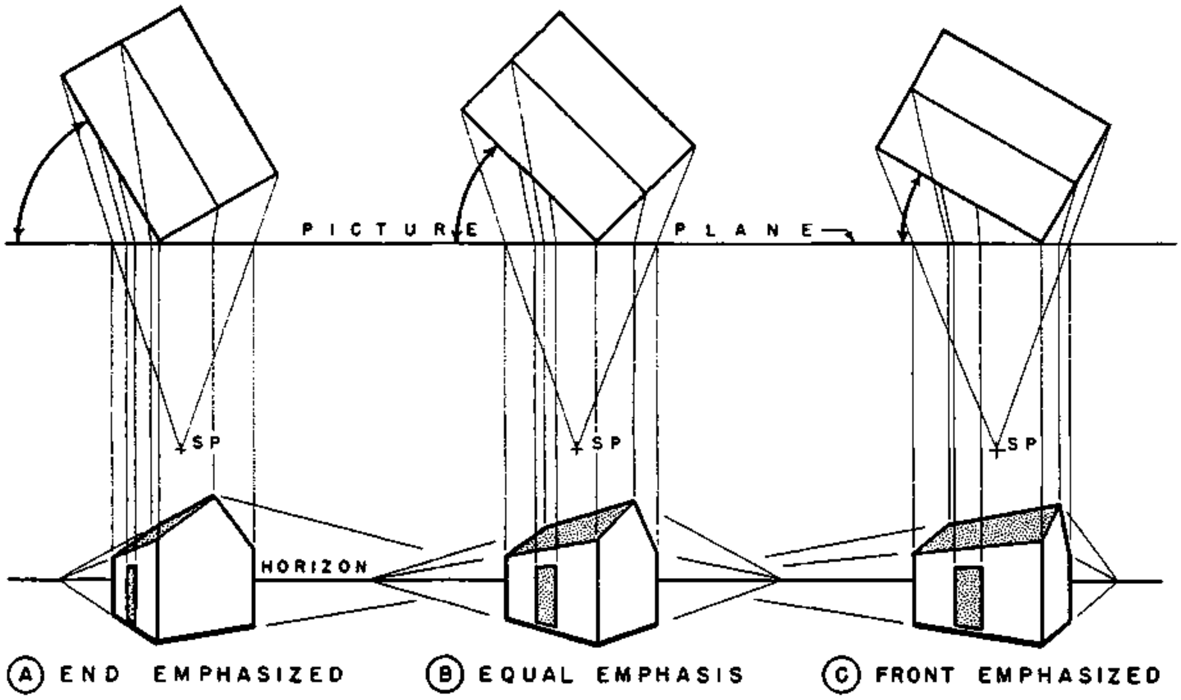

THE ANGLE OF VIEW determines which sides of the object are seen and their relative widths in the perspective. When a photographer takes a picture of a free standing building he walks around it to find the best position for his camera. The draftsman can get similar information in two dimensions from a plan of the building of which the pespective is to be made. He can choose a trial station point and, by turning a straight-edge on this point as a pivot, he can determine which wall areas will be visible in a perspective made from this point. Furthermore, he can determine the relative perspective widths and importance of these areas and whether there is any unfortunate alignment of corners in an irregular plan. From these observations he may be able to select a more satisfactory station point. The experienced draftsman develops the ability to visualize the perspective effect from different positions around the plan of the object and thus choose the station point best suited to his purpose. The relative importance of the sides shown in the perspective has probably the areatest influence on the angle of view. Ordinarily it is desirable to look more directly at the imprtant side and less directly at the unimportant one. In most perspectives of exteriors the entrance to the building is considered as an essential. A reasonable amount of the entrance should be visible when the shape of the building does not allow all of it to be shown from the chosen direction. When a model of the proposed building is available it is very useful in selecting a station point. All three of the variables can be considered with a model. The figure shows three views of the same object from different angles.

Regardless of the angle from which the object is seen, the station point should always be located approximately on a line through the center of the plan and perpendicular to the picture plane. The perspective is distorted when the station point is located very far to one side of this line. It is a great temptation where the plan is set up and the correctly located station point does not give satisfactory results, to take the easy way out and push the station point to one side. However, such a procedure causes the perpendicular to the picture plane to be off center on the plan and perspective. It will, therefore, cause the perspective to be out of proportion.

THE POSITION OF THE PICTURE PLANE.
The size of the perspective drawing obtained with a given object, given scale, and given relation between station point and object, can be varied by changing the position of the picture plane (fig. A, B, and C) The nearer the picture plane to the station point the smaller the perspective, the farther the picture plane from the station point the larger the perspective. If all positions of the picture plane are parallel the resulting perspective drawings will be identical in all respects except size.
The shifting of the position of the picture plane is a very helpful device for obtaining any size perspective desired. However, there are limits to its use. Extreme enlargements may be lacking in accuracy, while extreme reductions in size require space for the construction which is out of proportion to the size of the resulting perspective drawing.
The most common position of the picture plane is through the nearest main corner of the object. Simplicity and directness of construction are the principal advantages of this location of the picture plane. However, similar advantages are secured by having the picture plane pass through any visible corner of the object.
Other positions of the picture plane can be used to increase or diminish the size of the drawing without greatly complicating the construction. The constructions for points in front of and behind the picture plane have been given in the preceding pages.

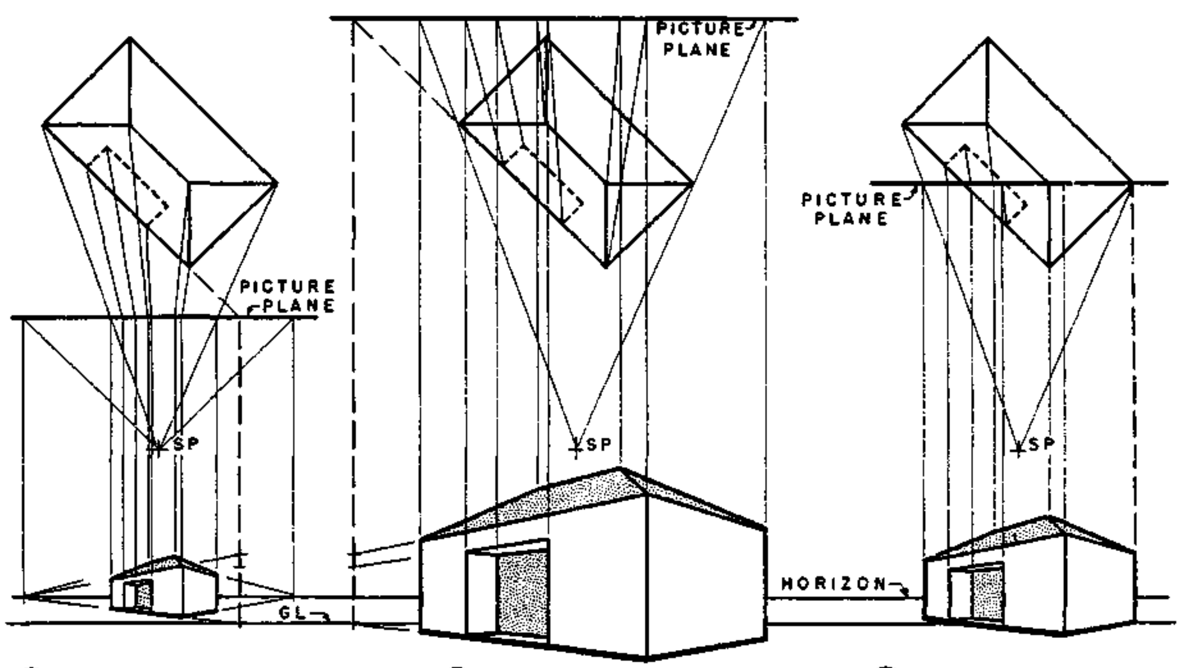

(A) BEFORE OBJECT (B) BEHIND OBJECT (C) THROUGH OBJECT

VARIATIONS OF THE PICTORIAL EFFECT IN PERSPECTIVE are obtained by changing the height, distance, and angle of view through manipulation of the station point. Variations in size of the perspective drawing can be obtained by change of scale of the auxiliary drawings, and by varying the position of the picture plane. An active imagination and the ability to visualize final results are as important to the draftsman as to the photographer in obtaining interesting pictures. The draftsman who understands the effect of the variables in perspective should be able to get the exact view that he wishes and make it the size best suited to his purpose.

When several perspective studies are made from a given design and none of them looks well, the designer may be reluctantly forced to the conclusion that he has not designed a beautiful building. It is even more difficult for the draftsman to make a dramatic perspecktive of a mediocre design than for the photographer to make a glamorous photograph of a homely person. Furthermore, the architect must prove the design in the actual building, and there is a question of professional integrity involved.

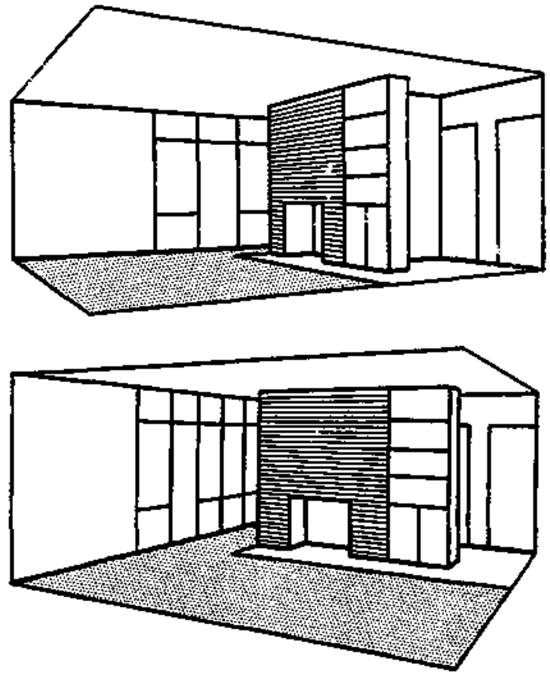

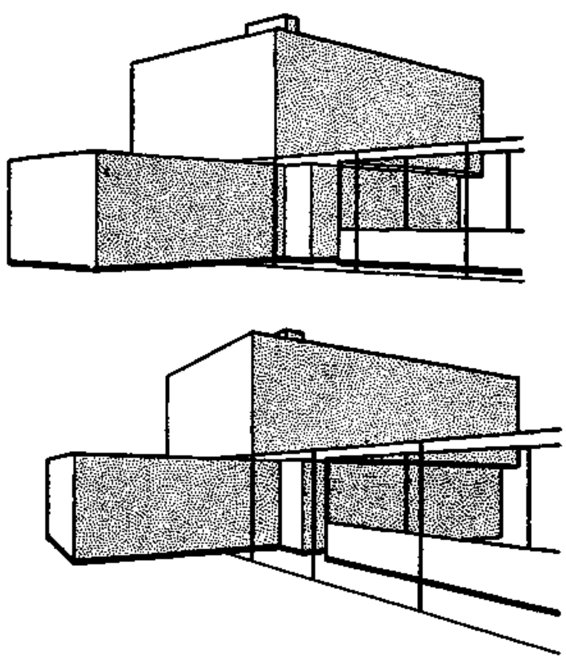

BLOCK STUDIES AT SMALL SCALE, which show only the masses and principal features of the object, can be made very quickly. They are of great value in choosing a station point for a larger and more detailed perspective drawing. They often save time because the large perspective can be made correctly the first time. With several possible variations considered in block form a better pictorial effect can be secured. These simple preliminary studies may be compared to the proofs furnished by a photographer. One of the proofs is selected for the final pictures or perspective.

While the beginner in perspective drawing needs the information from a number of block studies, he is usually not as willing to make them as the expert draftsman who appreciates their value from experience. On these speedy drawings the designer feels free to try arrangements which he would be very unlikely to try for a single large perspective.
There is, therefore, a psychological advantage in a number of block studies which leads to greater imaginative freedom, and often to more dramatic results. Freehand studies are used by many designers for ideas for perspectives.

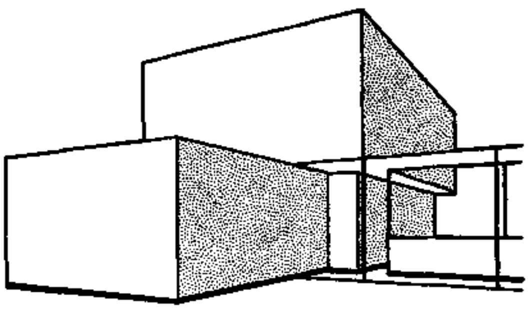

Ⓐ

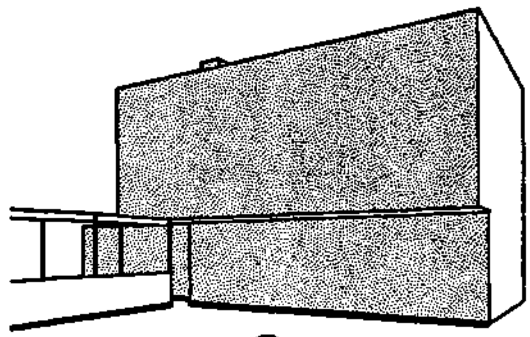

Ⓑ

EXTERIOR BLOCK STUDIES

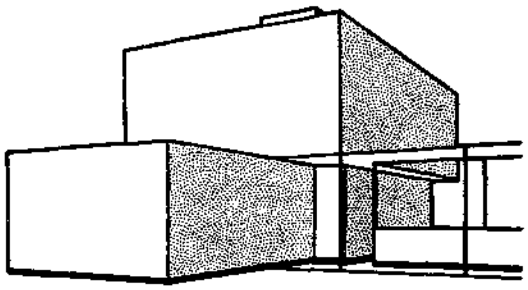

Ⓒ

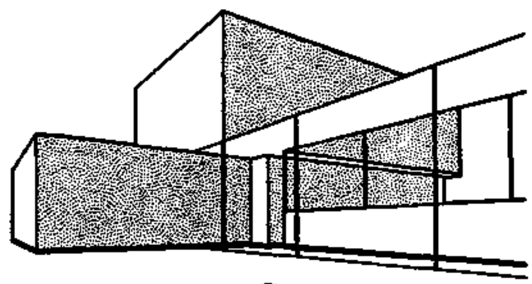

Ⓓ

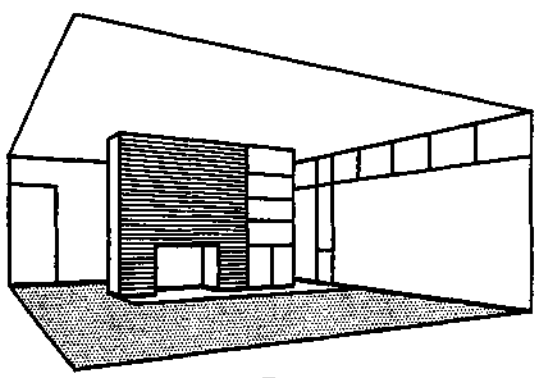

Ⓐ

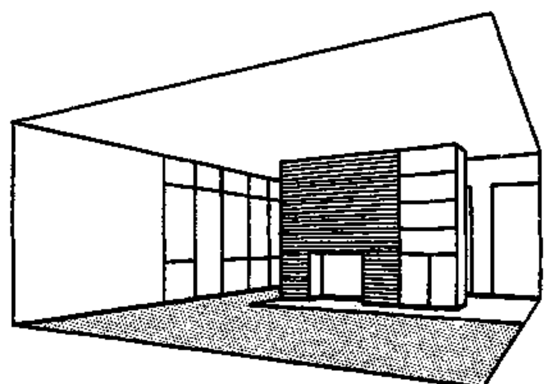

Ⓑ

INTERIOR BLOCK STUDIES

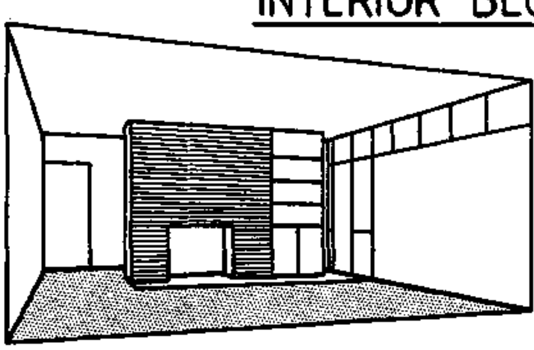

Ⓒ

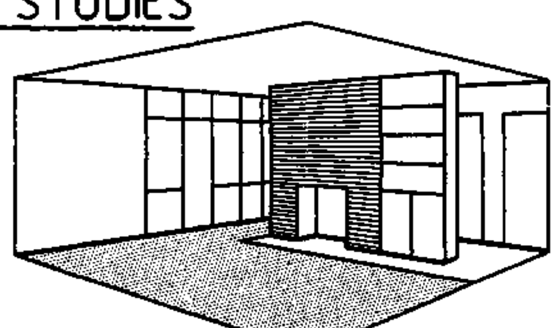

Ⓓ

AD II compiled : D.VOLKE AUG. '83	PERSPECTIVE DRAWING	ARCH. DRWNG. LECTURE CET 3o43/14.5 41
TCA TECHNICAL COLLEGE ARUSHA CHUO CHA UFUNDI ARUSHA	CIVIL ENGINEER. DEPARTMENT	41

THE PERSPECTIVE PLAN METHOD

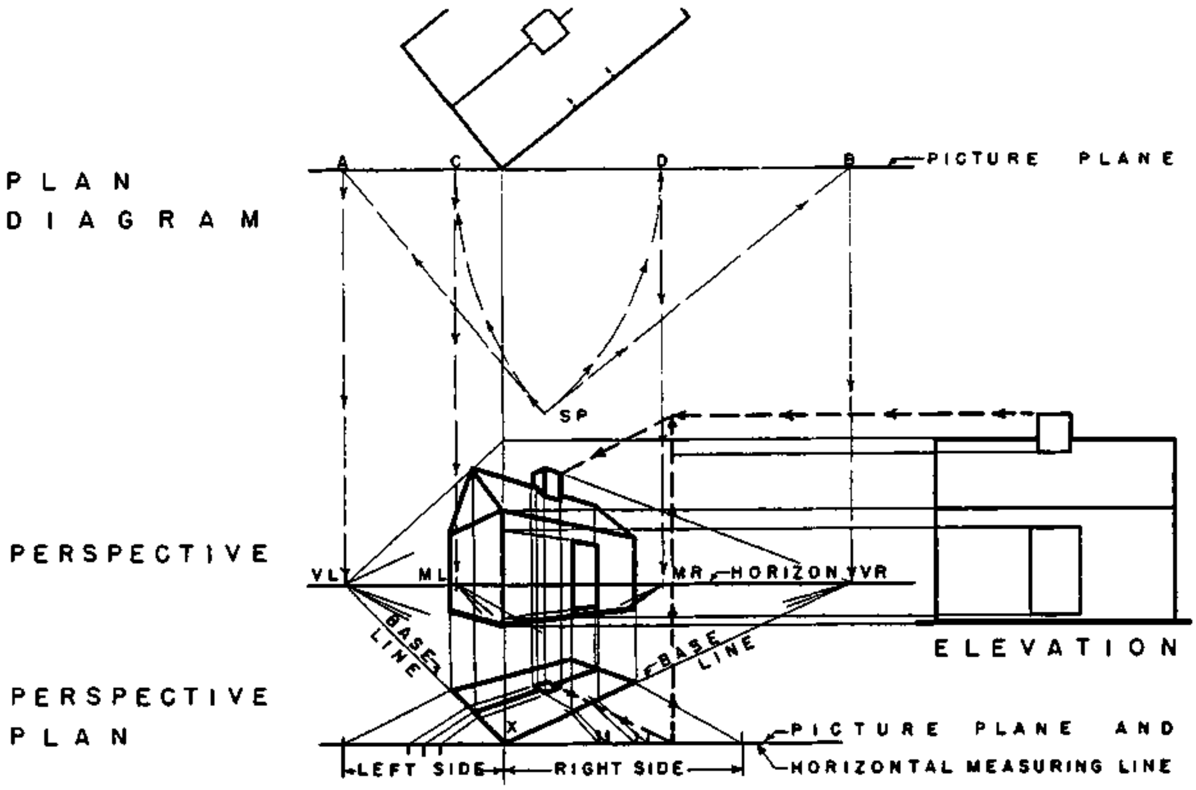

SIMPLE EXTERIOR

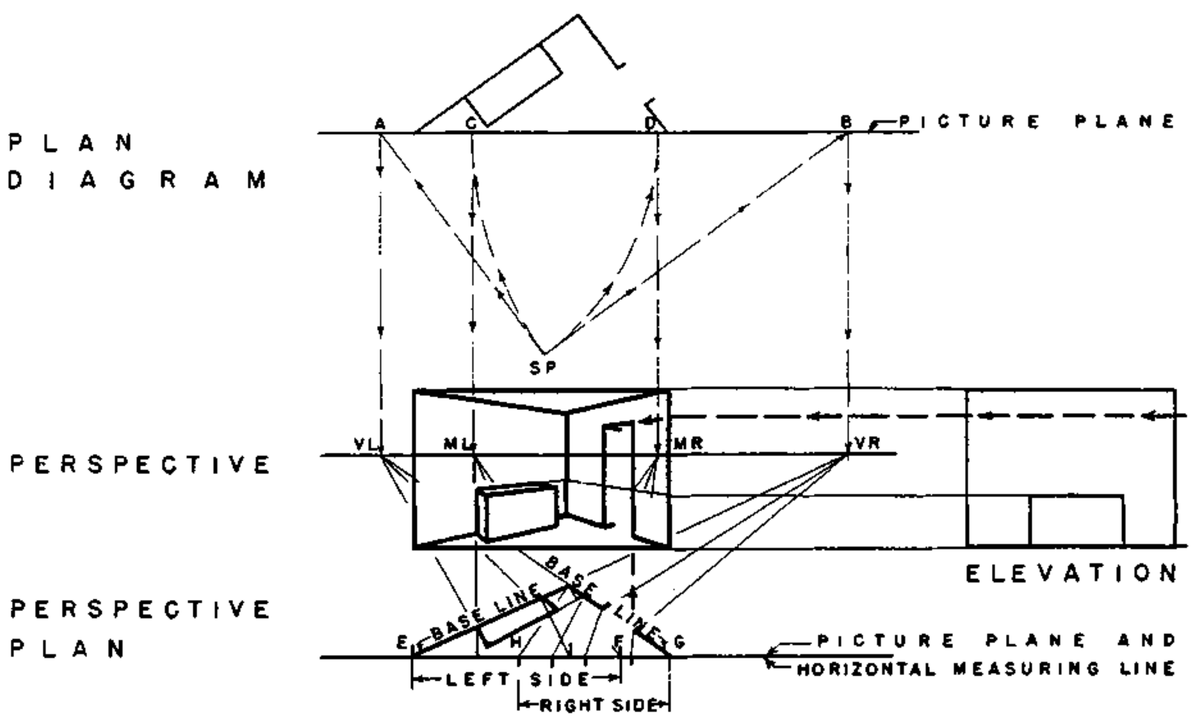

SIMPLE INTERIOR

AD II compiled: D. VOLKE AUG. '83	PERSPECTIVE DRAWING	ARCH. DRWNG. LECTURE CET 3043/14.542
TCA TECHNICAL COLLEGE ARUSHA CHUO CHA UFUNDI ARUSHA	CIVIL ENGINEER. DEPARTMENT	42

ONE POINT PERSPECTIVE

4.6 ONE — POINT PERSPECTIVE

The most striking and characteristic views of streets, landscape garden scenes, groups of buildings, single buildings, and parts of buildings both exterior and interior, often show them as they would appear in one-point perspective. One-point perspective is therefore important to the architect and draftsman, because it is frequently more suitable for the subject to be drawn or gives a more characteristic view than could be obtained with two - point perspective.

One-point perspective is so named because only one of the three typical sets of lines converges to a vanishing point. The remaining two sets of lines are parallel to the picture plane. Since lines which are parallel to the picture plane retain their true directions, the lines of each of these two sets remain parallel in perspective. In most one-point perspectives the picture plane is vertical. The vertical lines and one set of horizontal lines of the object are parallel to the picture plane, and remain respectively vertical and horizontal in the perspective drawing. The remaining set of horizontal lines is perpendicular to the picture plane and converges to a vanishing point.

One-point perspective can be used appropriately and effectively whenever the object presents a good appearance with the line of the center of vision of the observer perpendicular to one set of planes of the object, and consequently parallel to one set of lines; that is, when the conditions under which the object is naturally seen are those of one-point perspective.

Typical subjects for one-point perspectives are shown in the illustrations of the figure.

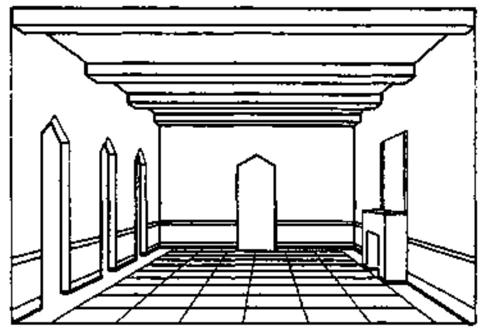

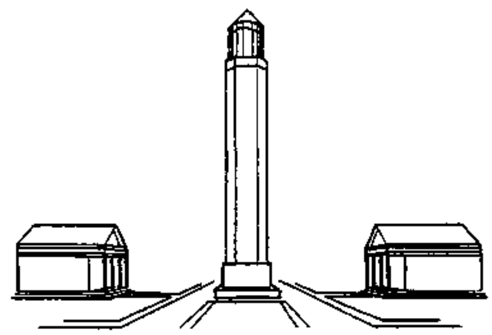

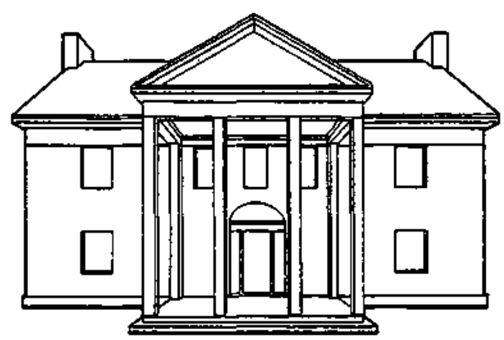

Although one-point perspective is not as widely used as two-point perspective it is extremely useful for both exterior and interior subjects and deserves the careful study and consideration of the person who wishes to become proficient in perspective drawing. Some of the most striking photographs used in illustrations of architectural magazines are one-point perspective views. Since the photographer usually has a wide range of choice of views, the one-point perspective position is chosen in most cases because of its pictorial merits and not from necessity.

THE COMMON METHOD OF ONE-POINT PERSPECTIVE. The use of a plan showing the object, picture plane, and station point is required for the construction of the perspective drawing.

Step I of the figure shows the location of the plan and elevation as the first step in making the perspective. The elevation is in this example located below the station point of the plan and to the right of the edge of the plan to leave a clear area for the perspective drawing. The horizon has been located near the center of the height of the elevation.

In Step II vertical lines are drawn from plan and horizontal lines from the elevation to give the intersection of walls, floor, and ceiling of the room with the picture plane. This line of intersection is at scale size since it lies in the picture plane. The vanishing point is located by drawing a vertical line from the plan of the station point to meet the horizon. When the position of one end of a line perpendicular to the picture plane has been located in the perspective drawing the line can then be drawn through this point toward or away from the vanishing point.

Step III shows how the plan is used to determine the correct horizontal spacing of vertical lines for the perspective drawing. The projectors are drawn from the two rear corners of the plan toward the station point to meet the picture plane. From these intersections with the picture plane vertical lines are drawn to the perspective locating the two vertical corners at the rear of the room. The lines of the intersections of walls with floor and ceiling are drawn from the corners A,B, C, D toward the vanishing point to meet the rear corners of the room. Horizontal lines from the two rear corners complete the simple perspective.

Step IV shows how lines can be traced around the walls and along the floor and ceiling from their correct scale positions on the lines in the picture plane.

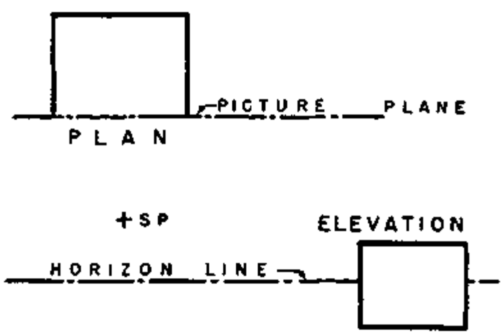

STEP I-ARRANGING THE AUXILIARY DRAWINGS

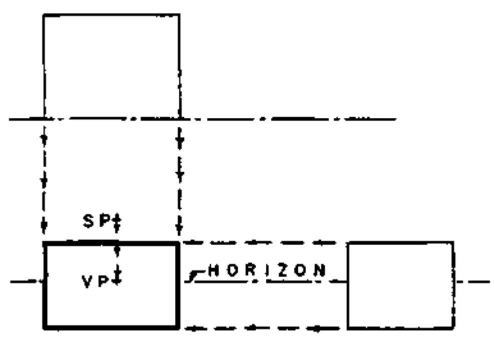

STEP II-LOCATING VP AND LINES IN PICTURE PLANE

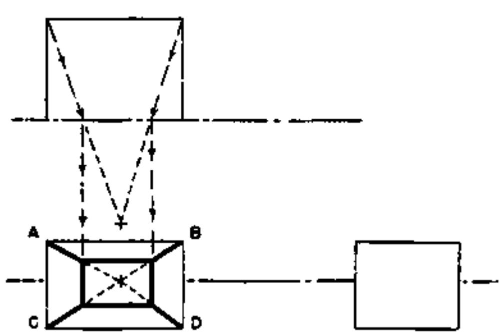

STEP III - DRAWING LINES NOT IN PICTURE PLANE

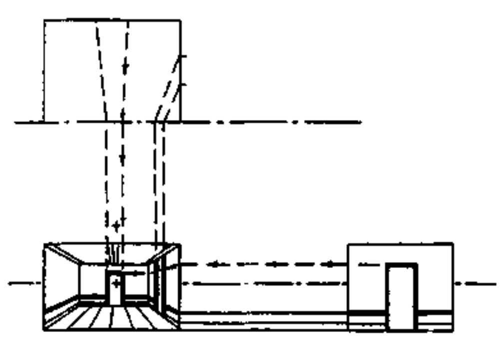

STEP IV-LINES ON WALLS CEILING AND FLOOR

AD II
compiled : D.VOLKE
AUG. '83

PERSPECTIVE DRAWING

ARCH. DRWNG.
LECTURE
CET 3043/14.644

TCA TECHNICAL COLLEGE ARUSHA
CHUO CHA UFUNDI ARUSHA

CIVIL ENGINEER. DEPARTMENT

Fig. A and B shows two methods of determining heights of objects which do not lie in or touch the wall surfaces or picture plane of a one-point perspective drawing. In these examples the freestanding objects are vertical lines which rest on the floor.

In each example there are two freestanding lines. The line object on the right of each example is behind the picture plane and the one on the left is in front of the picture plane. When the object is a solid, the method shown can be repeated as many times as necessary for different parts of the object to obtain a number of points which can be connected to make the drawing.

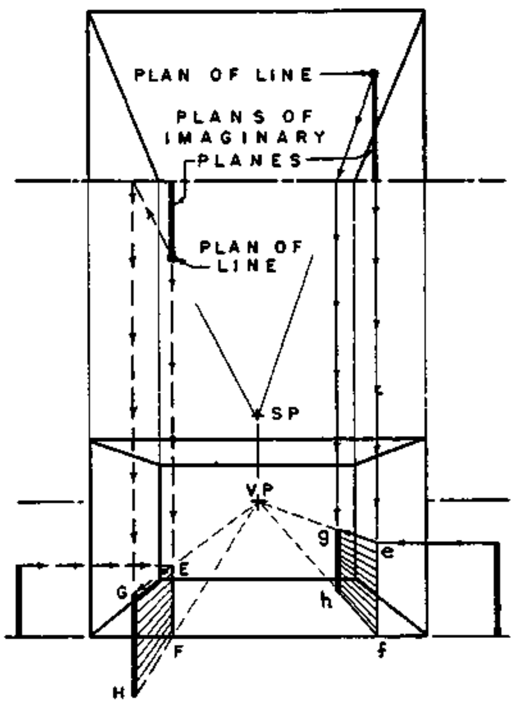

(A) DIRECT METHOD

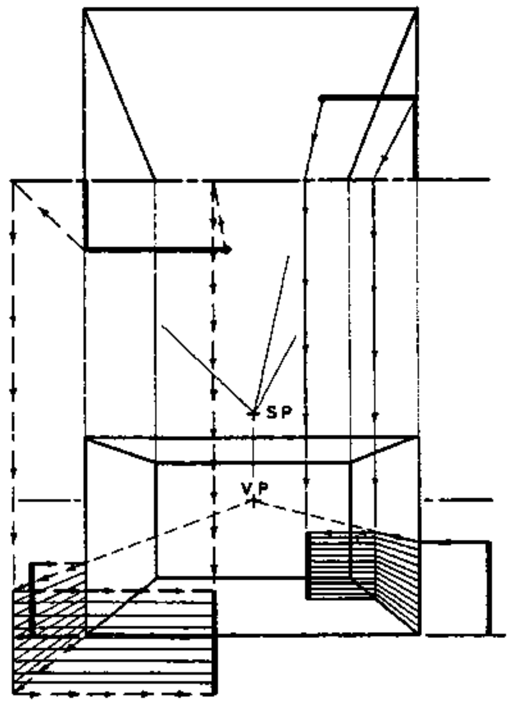

(B) INDIRECT METHOD

IN THE DIRECT METHOD, Fig., an imaginary plane which is parallel to the side walls of the perspective drawing and perpendicular to the picture plane is extended through the point plan of the freestanding line to meet the picture plane in plan. The height of the line is laid out to scale on the line E-F of intersection of the imaginary plane and picture plane in the perspective drawing. The height is then traced directly along the imaginary plane by lines through the vanishing point and brought to correct perspective position at G-H as shown. This is the most convenient and simple method of determining most heights of freestanding objects. However, in the special case when the freestanding line is on a vertical through the vanishing point this method cannot be used, because the line from the vanishing point is a vertical line and will not intersect vertical lines brought down from plan to establish heights. Furthermore, the lines from the vanishing point must be at a sufficient angle, so that their intersections with vertical lines can be accurately located. Objects which are very near a vertical line through the vanishing point cannot be accurately located by this method.

THE INDIRECT METHOD carries the heights along the walls or other planes perpendicular to the picture plane to the required distance, then along imaginary planes parallel to the picture plane to the correct perspective position. In the two examples of Fig. the wall serves as the plane perpendicular to the picture plane for the object behing the picture plan. An extension of the wall has been used for the object in front of the picture plane.

The three examples of one-point perspective by the common method (see figures) show the application of principles previously explained to more detailed subjects. An elevation or section has been drawn in each example in order to make the methods of determining heights as clear as possible. It is not necessary to draw the elevation or section as a part of the construction of a perspective by the common method.

The heights and widths of the parts of the object in the picture plane are drawn to scale size.

In the figure the ends of the projecting wings of the building lie in the picture plane and are drawn to scale size by dropping verticals from plan to meet horizontals from elevation. The top and bottom lines of the wings, which are perpendicular to the picture plane, are drawn to the vanishing point to meet the construction lines broght down from the junction of the wings and main building in plan. The indirect method is used to determine the height of the flagpole since it is too nearly on a vertical line throgh the vanishing point to use the direct method accurately. These construction lines are heavy dotted lines. The height of the roof is traced back into position by the direct method using an extension of the end wall to the picture plane for the height construction.

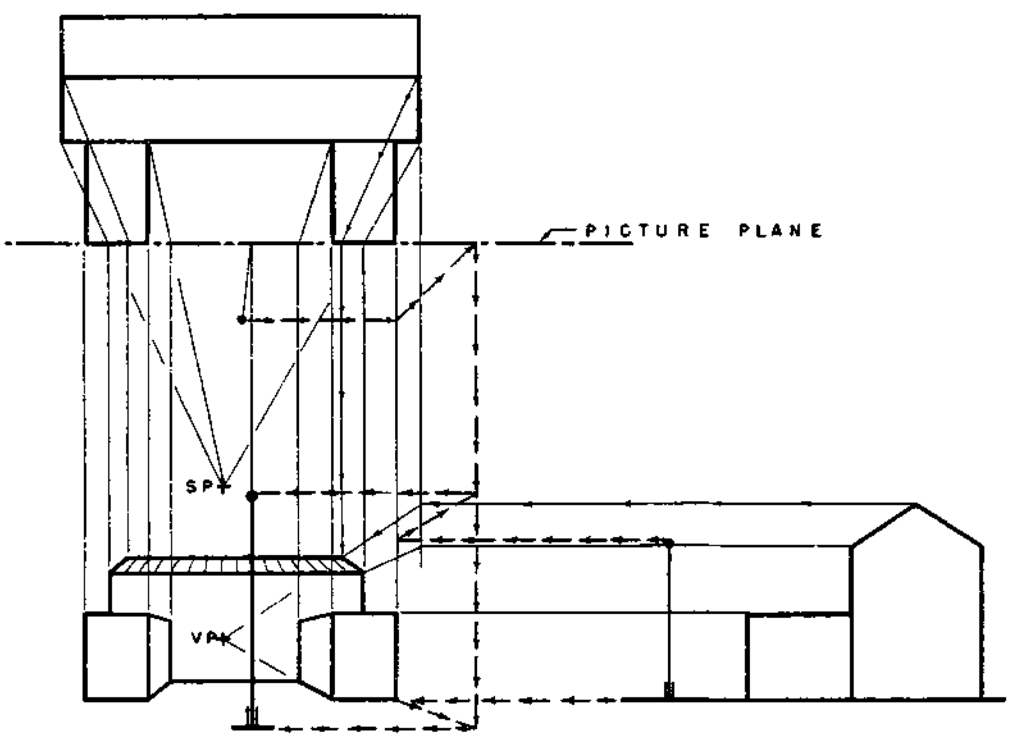

ELEMENTS OF ONE-POINT PERSPECTIVE - COMMON METHOD

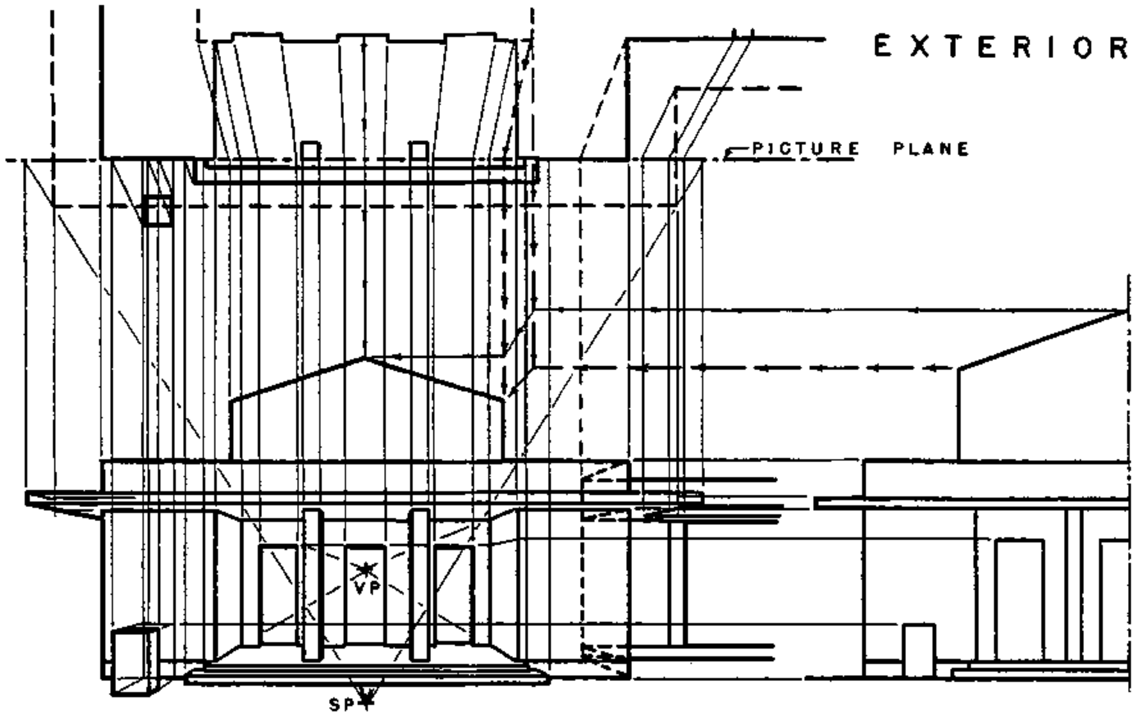

In the figure the lines made of short dots on the right side of the perspective show the construction of heights by tracing around hidden surfaces. The lines with longer dots and arrows in this example show the construction of a height, by the direct method, around one imaginary corner. The indirect method is used to determine the height of the highest point of the building.

The figure illustrates the tracing of heights around visible wall surfaces for the wainscoting, windows, and ceiling line. The height of the rectangular box is found by the indirect method, using an imaginary extension of a plane of the box to meet the wall. The lines of the sofa are projected directly from the scale profile (drawn in dotted lines) in the picture plane to position in the perspective drawing.

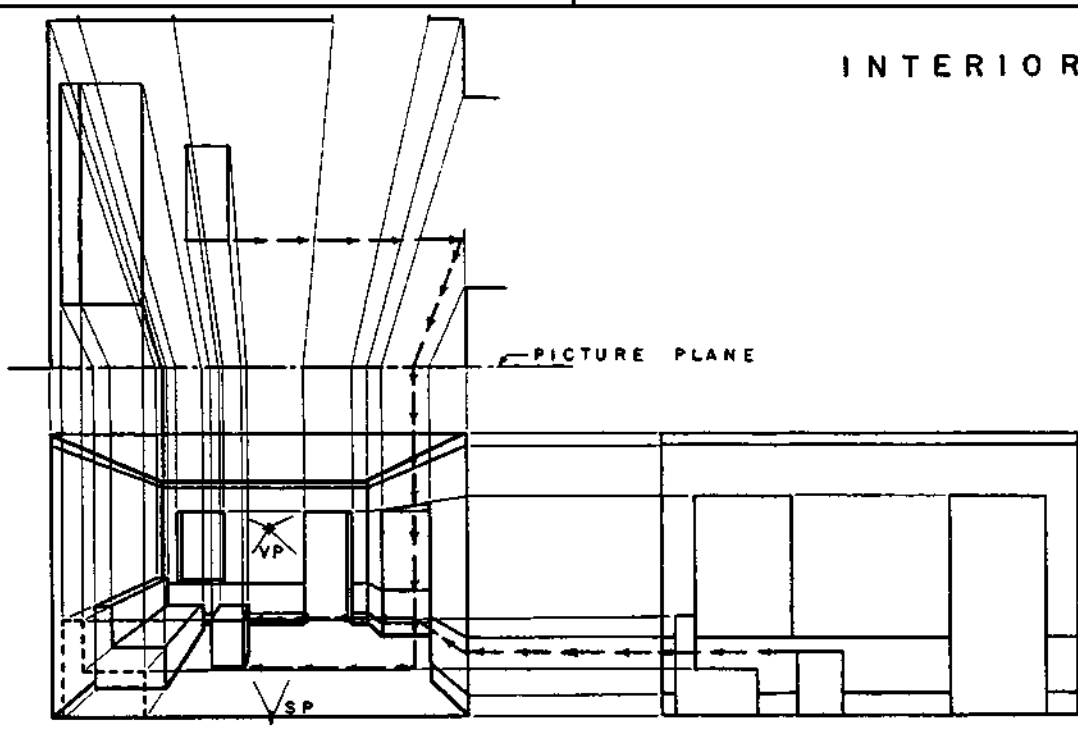

AD II compiled : D. VOLKE AUG. '83	PERSPECTIVE DRAWING	ARCH. DRWNG. LECTURE I CET 3o43/14.647

VARIABLES

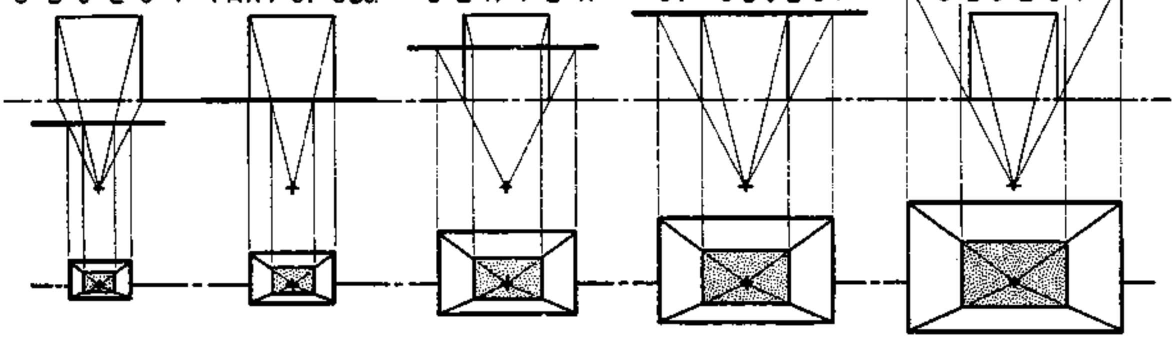

LOCATION OF THE PICTURE PLANE

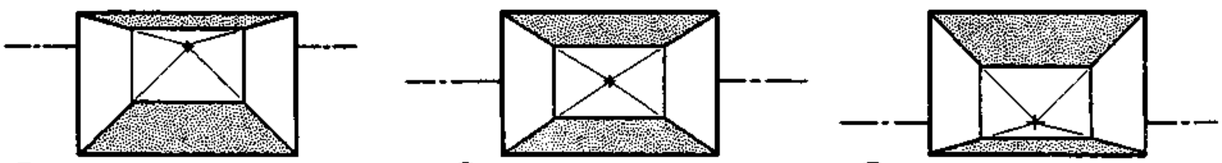

HEIGHT OF STATION POINT

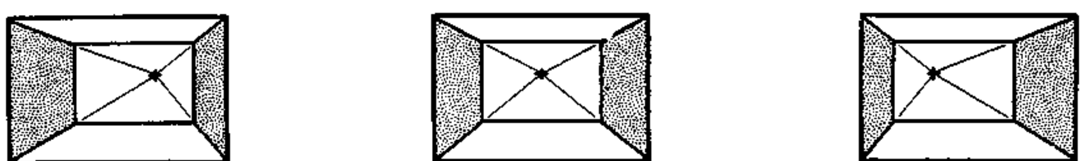

HORIZONTAL POSITION OF STATION POINT

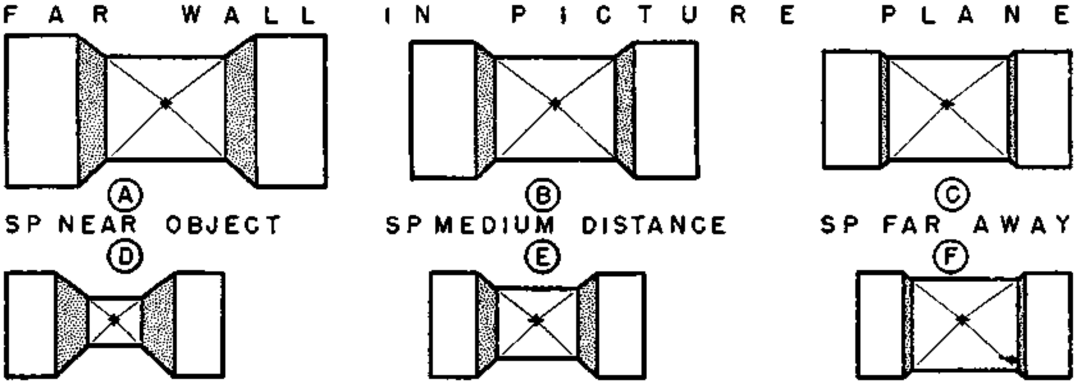

DISTANCE OF STATION POINT FROM OBJECT

AD II compiled : D.VOLKE AUG. '83	PERSPECTIVE DRAWING	ARCH. DRWNG. LECTURE CET 3o43/14.648

TCA	TECHNICAL COLLEGE ARUSHA CHUO CHA UFUNDI ARUSHA	CIVIL ENGINEER. DEPARTMENT	48

EXAMPLES

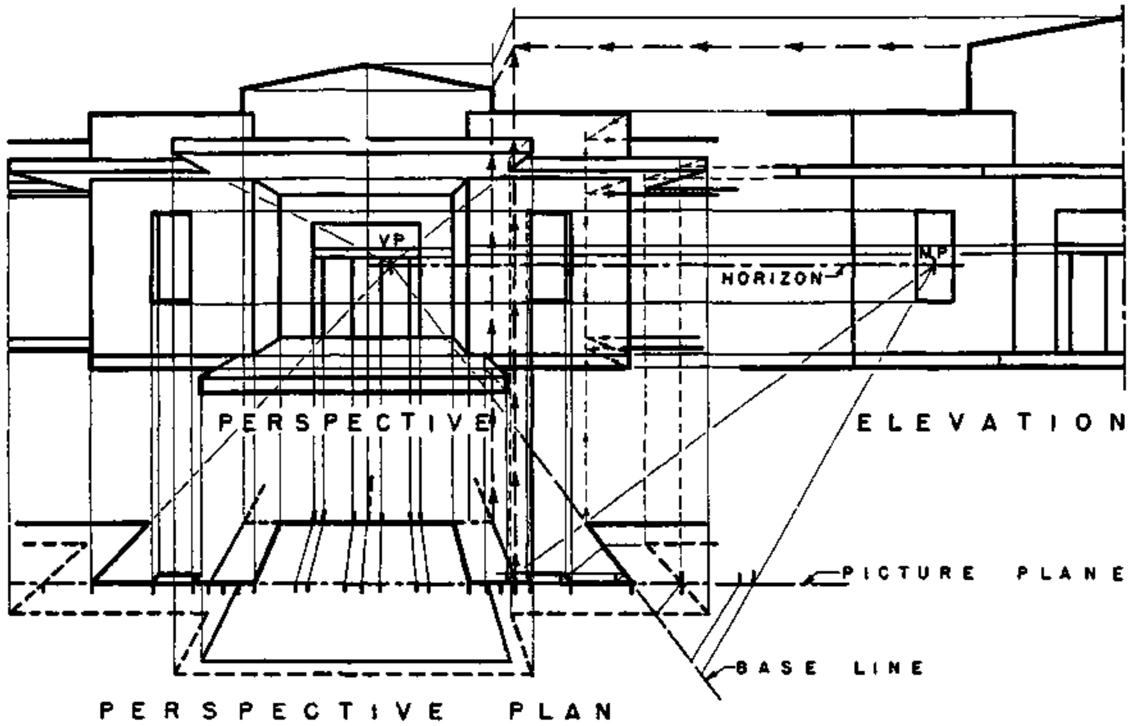

EXTERIOR ONE—POINT PERSPECTIVE

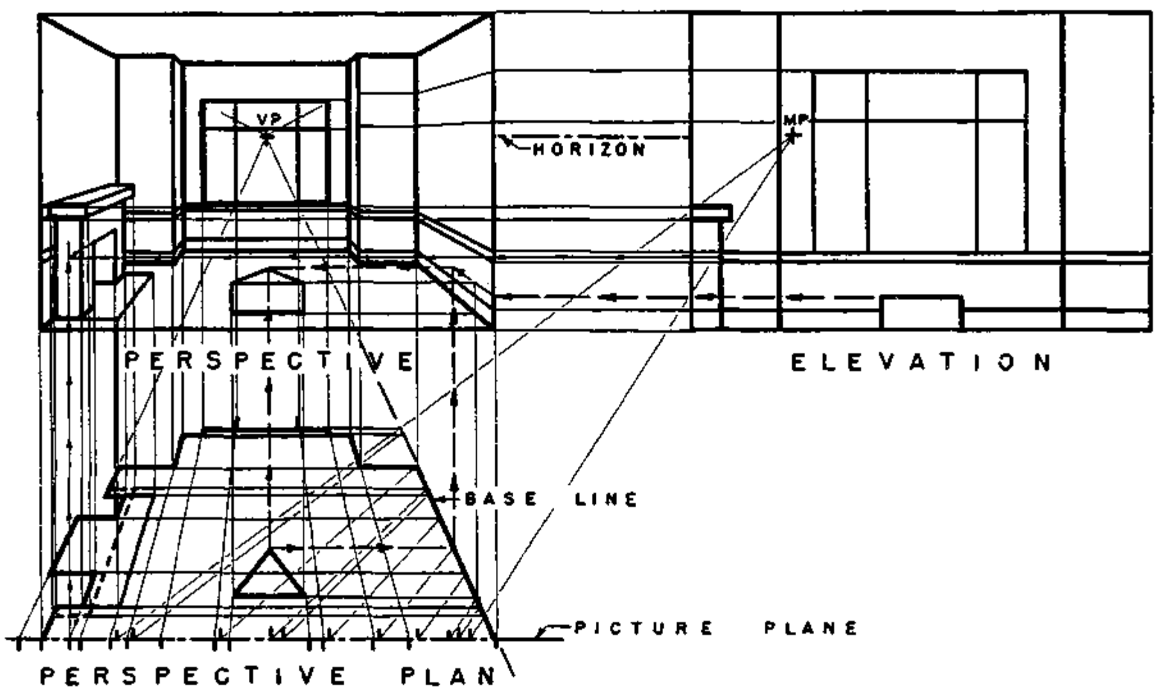

INTERIOR ONE—POINT PERSPECTIVE

AD II compiled : D.VOLKE AUG. '83	PERSPECTIVE DRAWING	ARCH. DRWNG. LECTURE CET 3o43/14.649
TCA TECHNICAL COLLEGE ARUSHA CHUO CHA UFUNDI ARUSHA	CIVIL ENGINEER. DEPARTMENT	49

5. SHADES and SHADOWS

5. SHADES AND SHADOWS

Wherever there are buildings, clouds, trees, rocks, or other objects extending above the surface of land or water there are shadows when the sun shine. These shadows form an essential part of the pattern of a landscape, a piece of pottery, or a building. Since shadows are inevitably a part of any object which is to be placed in the light, their forms and masses must be considered in studying a design if that design is to be completely successful.
A knowledge of shadow shapes and of the methods by which they are correctly and accurately constructed on various types of drawings is an essential part of the training of any draftsman or designer of objects in three dimensions.

5.1 THE USE OF SHADOWS. Shadows are especially useful in architectural drawing and design because they make the drawings more easily understood. The shades and shadows express the shapes of surfaces, showing whether they are curved or flat, slanting or vertical. In drawings shadows are especially valuable because they bring out the third dimension; the distance back, in what would otherwise be a two-dimension drawing. The lines and masses of shadows form an important part of an architectural design and should be a part of the studies made in the development of the design. When the correctly drawn shadows are unpleasant or disturbing there is something wrong with the design and it should be revised to produce a more harmonious effect.

Shadows are almost indispensable on rendered presentation drawings. They add to the picture effect of drawings, making them much more easily understood by the client. The rendered shadows give even the designer a clearer conception of the appearance of the projected building and aid him in perfecting its design.

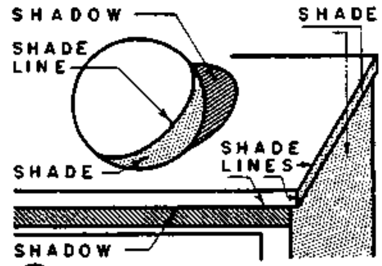

(A) DISTINCTION BETWEEN SHADE AND SHADOW

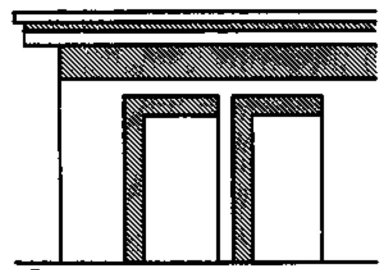

(B) SHADOW WIDTHS MAY EQUAL PROJECTIONS

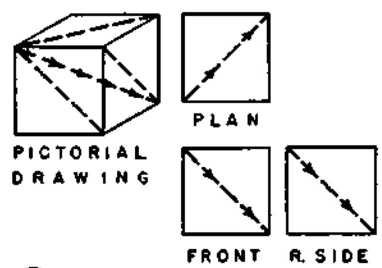

(C) THE CONVENTIONAL DIRECTION OF LIGHT

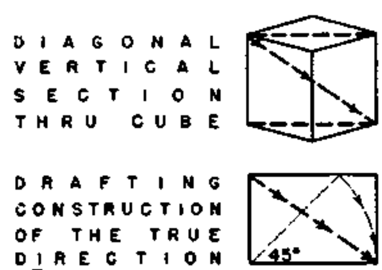

(D) TRUE DIRECTION OF A CONVENTIONAL RAY

DEFINITION OF SHADOW TERMS

5.2 SHADES AND SHADOWS.

A shade occurs when the shape of the object excludes the light rays from part of its surface (Fig. A) The lines between the areas of light and shade are called shade lines. On a curving surface, such as that of a sphere, the shade line is the line of tangency of light rays to the curving surface. On objects made up of plane surfaces a shade line is the edge where a surface in light meets a surface in shade. A shadow travels through the air from one object to another, or from one part of an object to another part of the same object.

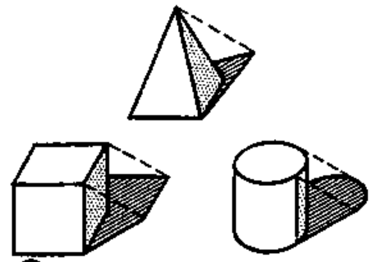

(I) THE SHADE LINES
CAST SHADOW OUTLINES

5.3 THE CONVENTIONAL DIRECTION OF LIGHT.

In casting shadows it is necessary to assume a source and direction of light. The source of light is usually assumed to be the sun and the rays of light are considered to be parallel The direction of light used in practically all shadow-casting gives shadow widths which are equal to the projections from wall surfaces of vertical and horizontal shade lines which are parallel to the picture plane and the wall. Characteristic examples of shadows which are equal to the projections making them are those of the cornice and window shown in fig. B.

If a cube is placed so that its sides are parallel to the three coordinate planes of elevation, plan, and side elevation, then its diagonal from the top left front corner to the lower right rear corner gives the conventional direction of light and the three views of the cube give the apparent directions of light in the three typical drawings (fig. C).

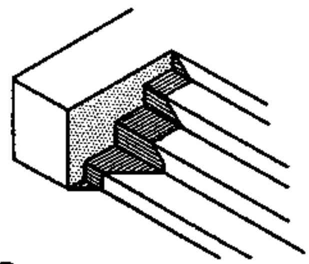

(II) SHADOW SEEN IN A
PICTORIAL DRAWING

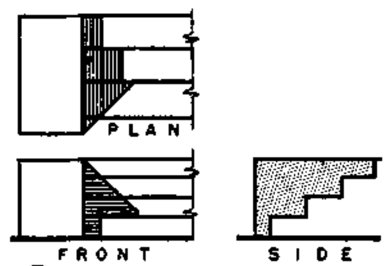

(III) SHADOW SEEN IN THE
MULTI-VIEW DRAWINGS

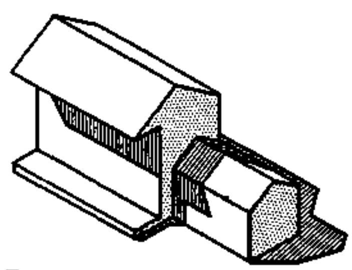

(IV) SIMPLE MODELS HELP
TO EXPLAIN SHADOWS

5.4 THE 45° DIRECTION.

Since the direction of light in front elevation, plan, and side elevation views is the diagonal of a square it is a 45° line in all three drawings. Therefore, shadows may be traced by using the 45° triangle on these drawings. A ray of light travels equally in three directions:

1. to the right
2. down, and
3. back,

as shown by edges of the cube.

The 45^0 triangle should be regarded as a tool for measuring equal distances in two directions, in front elevation down and to the right, in side elevation down and back, and in plan back and to the right. It is usually the most convenient way to measure shadow widths, but any means of measuring equal distances such as dividers, scale, or paper strips may be used if more convenient.

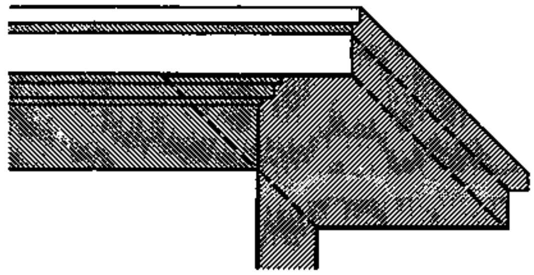

(A) LINES WHICH CAST SHADOWS

5.5 THE TRUE DIRECTION OF LIGHT.
Since the light rays are at an angle to all the planes of projection the true direction of light is not seen in any of the multi-view drawings. In order to see the true direction of the conventional ray of light it is necessary to use an auxiliary plane perpendicular to plan and parallel to the direction of light. The true direction of a ray of light is represented by the diagonal of a cube, which is the diagonal of a rectangle, of which the short sides are edges of the cube and the long sides the diagonals of the top and bottom of the cube. The true direction of light may readily be constructed as shown in the bottom drawing of fig. D, and will be found useful in constructing some shadows.

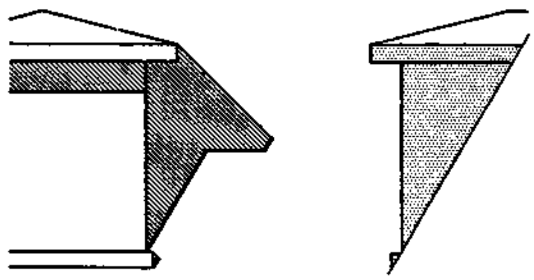

(B) SHADOWS OF PARALLEL LINES

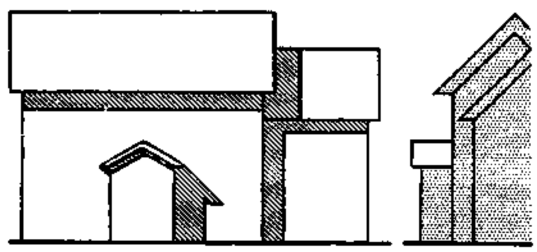

(C) SHADE LINES PARALLEL TO SURFACE RECEIVING SHADOW

5.6 SHADOWS OF SOLIDS
Architecture is made up of volumes and masses which are usually the shapes of the simple geometric solids used either singly or incombinations. Shadows on architectural drawings are the shadow of solids or of hollow masses.

The shadow of any solid is bounded by the shadows of the shade lines of the object.
Only those lines which mark the divisions between light and shade on an object can cast shadows. There fore, if the shade lines on the drawings of an object can be located by inspection, the shadows of these shade lines can then be determined to give the outline of the shadow of the object.

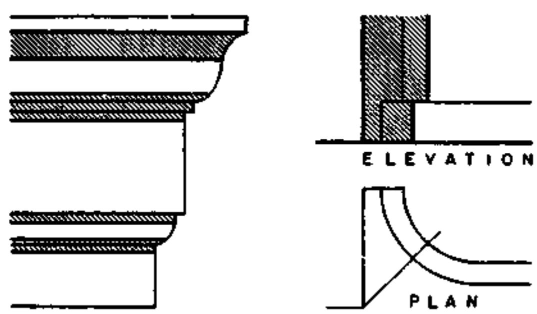

(D) SHADE LINES PARALLEL TO LINES IN SHADOW SURFACE

PRINCIPLES OF SHADES AND SHADOWS

5.7 PLANES OF SHADOW

The straight shade lines of an object make planes of shadow. Therefore the shadows of these straight lines are the intersections of their planes of shadow with the surfaces on which the shadows fall.

1. The position of the shade line
2. the location of the eye of the observer
3. the direction of light, and
4. the shape of the surface on which the plane of shadow ends are the factors which determine the shape of the shadow as shown on the drawing.

5.8 PRINCIPLES OF SHADOW-CASTING

A knowledge of some of the simple geometric and self-evident principles used in casting shadows will make the problems of working out shadows more easily understood. Several of these helpful principles are described in the numbered paragraphs, and illustrated on this and the following page. The use of a light and a simple model will help the reader to verify and understand these principles.

I - A LINE IN SHADE OR SHADOW CANNOT CAST A SHADOW because light does not strike it. The lines of the moldings underneath the cornice in fig. A are entirely in shadow and do not cast shadows. When part of a line is a shade line in light and part of the line is in shadow, then only the part of the line which is in light will cast a shadow. The corner of the wall in fig. A is an example of a line which is partly in light and partly in shadow. By first determining which parts of the object are in shadow it is possible to locate the shadow of the object without wasting time finding the shadows of lines which do not make parts of the shadow outlines.

2-SHADOWS OF PARALLEL LINES ARE PARALLEL when they fall on the same plane or on parallel planes (fig. B). This is true regardless of the relation of the parallel lines to the plane receiving the shadow and of the direction of the plane receiving the shadow. This principle can often be applied to problems to simplify the working out of shadows of parallel lines and to secure greater accuracy. In the case of slanting shadow lines such as those from the dormer onto the roof the direction can be determined most accurately from the longest shadow; then the others can be drawn parallel to it. When the direction of a shadow line is known the construction of the shadow is simplified.

3-THE SHADOW IS PARALLEL TO THE LINE MAKING THE SHADOW when
1. the line is parallel to the plane receiving the shadow, or
2. the line is parallel to the straight lines in the surface receiving the shadow.

The shadows on the house of Fig. C illustrate the first condition. The shadow of the cornice onto the wall below, the shadow of the vertical corner of the wall onto the second wall surface and the shadow of the right edge of the main roof onto the parallel lower roof surface are all illustrations of this principle. The second condition is illustrated by the molding and the shadow of the vertical line onto a vertical cylinder in Fig. D.

4-THE SHADOW OF ANY PLANE FIGURE ON A PARALLEL PLANE is identical in shape size, and direction with the figure. This relation is true regardless of the angle at which the area and the parallel plane are turned (fig.). When part of the shadow is behind the plane figure making the shadow, as in the center example, the visible part of the shadow is identical with the part of the figure which makes the shadow. When the plane figure is part of a solid, as in the case of the example of the block on the right of Fig. I, then the part of the shadow made by the end of the block follows this rule since it is parallel to the plane receiving the shadow.

5-A SHADOW IS VISIBLE only where it falls on a visible surface which is in light. The triangular shadow below the left edge of the dormer roof in Fig. II is visible because it falls on the main roof. There is no similar visible shadow at the left edge of the main roof because there is no visible surface receiving the shadow. The block at the left of Fig. II is set out from the wall so far that none of its shadow is visible in elevation. All of the shadow falls on the floor plane. The distance of the block on the right side is such that part of the shadow is visible in elevation and part in plan.

6-ANY LINE ON A PLANE SURFACE APPEARS TO BE A STRAIGHT LINE WHEN THE OBSERVER LOOKS PARALLEL TO THE PLANE SURFACE. (Fig. III) Since the entire plane surface will be seen as a line when the observer looks parallel to the plane, then any line in the plane will appear to be straight. Objects, areas, and lines are shown in drawings as they would appear from a certain viewpoint.

7-WHEN THE OBSERVER LOOKS AT THE END OF ANY STRAIGHT LINE, so that the line is seen as a point, then the shadow of the line will appear to be straight regardless of the shape of the surface receiving the shadow. The line makes a plane of shadow. Since the observer is looking parallel to the line he is also looking parallel to the plane of shadow made by the line and any line in the plane of shadow appears to be straight. The shadow line lies in the plane of shadow and therefore appears to be a straight line when seen parallel to the plane, as illustrted in the elevation of fig. IV. Any line seen in end view in elevation, plan, perspective, or any other drawing will cast a straight line shadow in that view where it is seen as a point. A simple model made of boxes and cans with either sunlight or a single artificial light will help the reader understand this type of shadow.

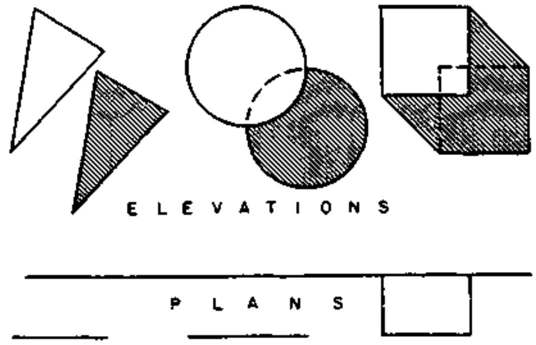

(I) SHADOWS OF PLANE FIGURES

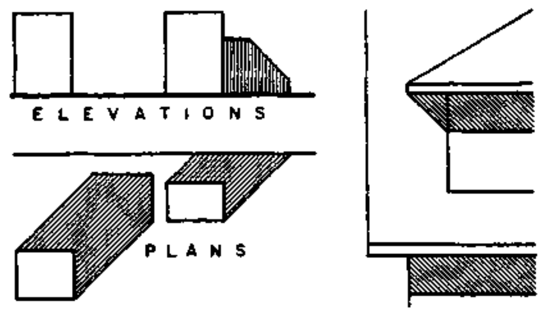

(II) VISIBILITY OF SHADOWS

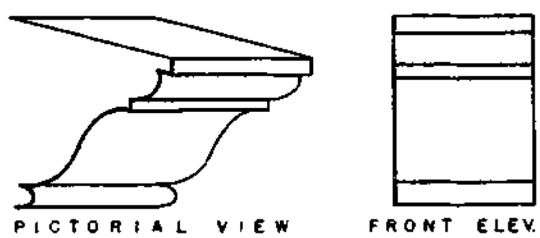

(III) APPEARANCE OF LINES IN PLANE SURFACES

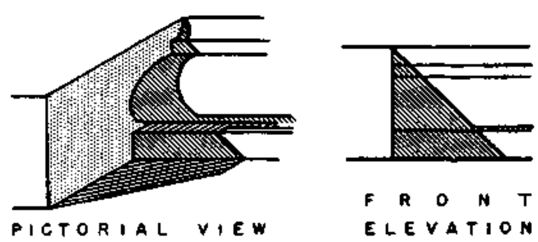

(IV) SHADOWS OF LINES WHICH ARE SEEN AS POINTS

PRINCIPLES OF SHADES AND SHADOWS

6.DRAWING PRACTICE

The designer's language is the drawing. It formulates his statements clearly and is internationally readable: factually, by geometrical drawings; attractively, by perspectives. A drawing helps to present ideas and to convince the client. The architect's production drawings and perspectives are only a way of presenting the proposed building clearly, not an end in themselves as are paintings.

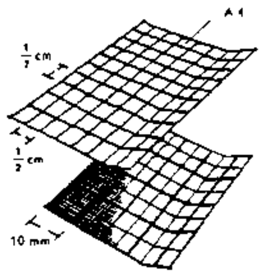

(1)

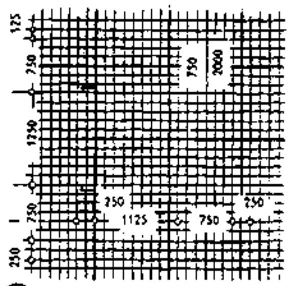

(2)

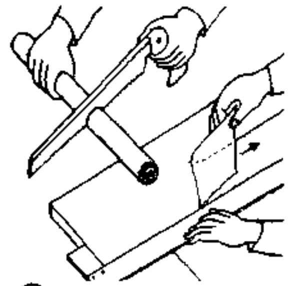

(3)

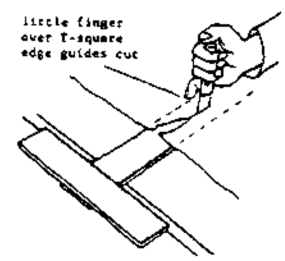

(4)

Sketch pads (A4 size) with 5 mm ($\frac{1}{4}$ in) squared paper are convenient for freehand designing to scale; for more exact sketches, mm squared paper with bold 10 mm and less bold 5 mm division lines, → (1), (2). For sketching with soft pencil, thin transparent paper; roll is cut to required sizes and single pieces torn off along T-square, → (3), or cut on T-square, → (4). Plans on good translucent, unglazed tracing paper in standard sizes, → p. 2, to be used with edge protection, → (5). For ink and water colour drawings, tracing

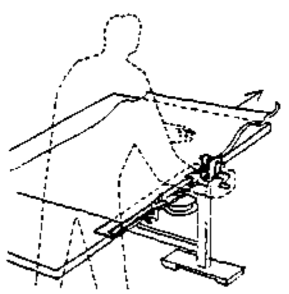

(5)

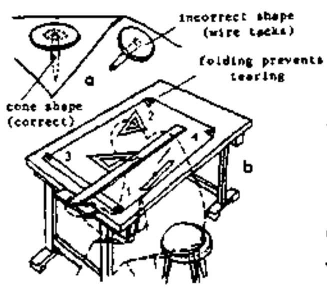

(6)

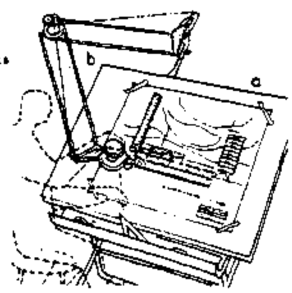

(7)

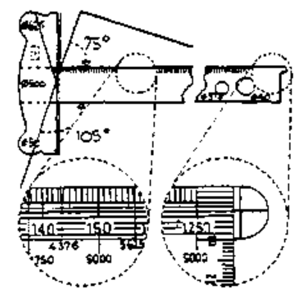

(8)

linen is best; for painting and perspectives, special papers. Fix paper to drawing board or table with clips or drawing pins, not wire tacks which leave holes, → (6a). First, fold 20 mm ($\frac{3}{4}$ in) wide edge of the paper which later becomes the fastener hem and lifts T-square slightly off paper to avoid blurred lines (for same reason draw from top to bottom). Then fold remaining corners 2 and 4 of

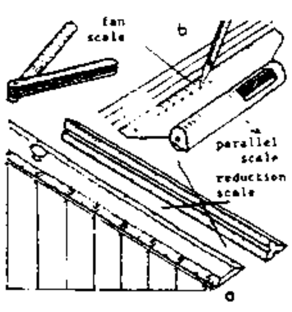

(9)

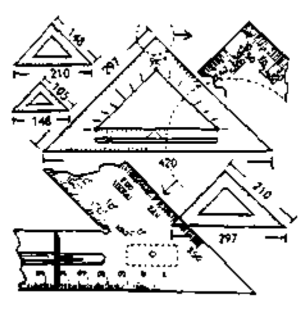

(10)

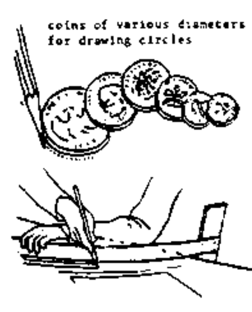

(11)

(12)

sheet, → (6b); pin corner in 1, smooth sheet in direction 2; after fixing this corner, repeat the action from corner 3 to 4. Instead of drawing pins, clips or adhesive tape may be used, → (7a). Mechanical drawing equipment originally used only by engineers is finding its way into architects' offices, → (7b). In addition to ordinary T-square, special (Patent Neufert) T-square, which makes it possible to apply various angles; has octameter and centimetre scale, → (8).

DRAWING PRACTICE

Scale with 1 mm divisions is best, $\frac{1}{2}$ mm markings are confusing. For sketching to scale and drawing lines at set distances, parallel rules or rolling parallel rules are useful, → (9b). Use of triangle rules is discouraged, → (9). Best set squares are transparent uncoloured plastic with mm division, sometimes degrees, → (10), (rigid or adjustable). Various aids to drawing circles and curves,

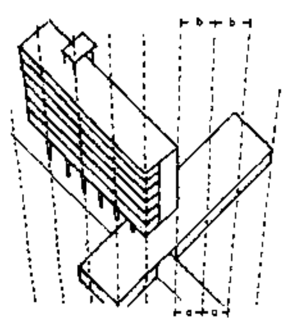

⑬

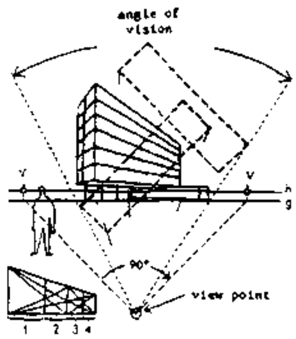

⑭

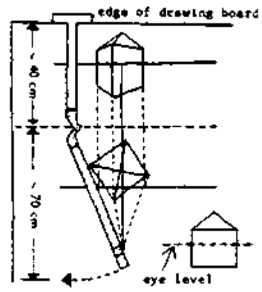

⑮

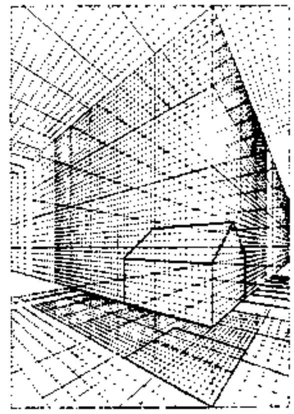

⑯

→ (11) (improvised) and (12) (manufactured). Perspectives and models clarify the ideas of the designer and usually convince better than words. Perspective should be constructed to give an exact picture of the real building. Isometric projections can replace perspective birds-eye view if they are drawn to sc. 1:500, → (13). Easy method to set up perspective, → (14). Perspective apparatus, → (15). Perspective screen which may also be used for interiors, → (16). Drawing tricks: fast and exact drawing of rectangular

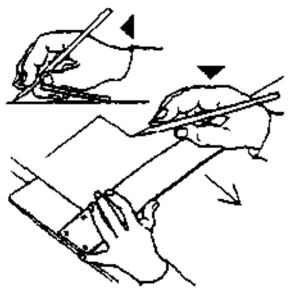

⑰

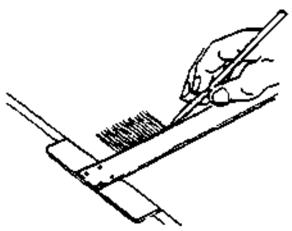

⑱

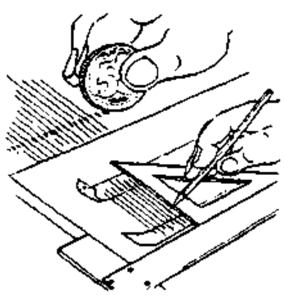

⑲

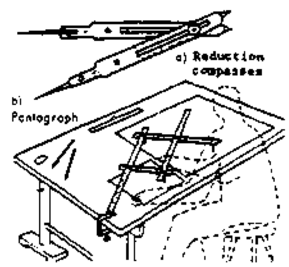

⑳

diagrams with T-square only, without set square, → (17); correct holding of T-square and much practice essential to success. Division of line into equal parts facilitated by putting a scale rule at slant, → (9). Various aids, → (18), (19). Enlargement of drawings to scale through pantograph, → (20). Reduction compasses facilitate drawing of fixed lines in adjusted relation to original, → (20).

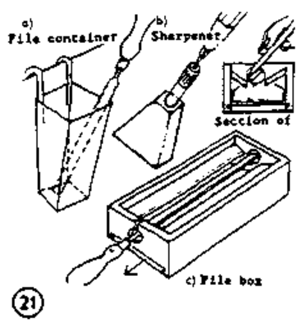

㉑

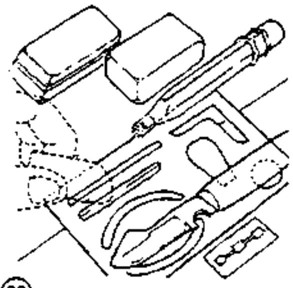

㉒

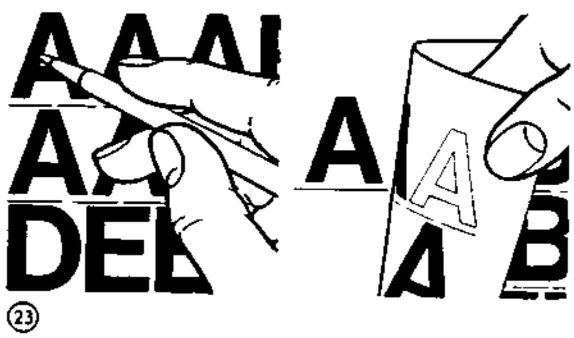

㉓

Retractable pencil suitable for 2 mm dia leads of all grades 6B-9H. When sharpening leads, graphite catcher essential, → (21). To erase indian ink; glass eraser, erasing knife or razor blade; to erase pencil lead: non-smearing india rubbers. In drawing with many lines use erasing shields, → (22). Lettering best unaided; for technical drawings stencil with pen or brush, or use instant dry transfer system such as 'Letraset' which also provides architectural symbols, → (23).

6.1 DRAWING SHEETS

(→ BS 1192:1969)

Standard sizes
A0 841 x 1189 mm (33 1/8 x 46 3/4 in)
A1 594 x 841 mm (23 3/8 x 33 1/8 in)
A2 420 x 594 mm (16 1/2 x 23 3/8 in)
A3 297 x 420 mm (11 5/8 x 16 1/2 in)
A4 210 x 297 mm (8 1/4 x 11 5/8 in)

These sizes are all proportional, leading to simple reduction and enlargement and sheets may be easily folded for filing and despatch. The relatively small sizes should lead to easier handling in the drawing office and on site. Keep the number of sizes to minimum, to facilitate binding and reference.

Original drawings and contact copies should both be of standard sizes, therefore trimming of sheets that makes them less than A sizes should be avoided.

Folding
Prints may be folded to A4 size quite easily from any larger A size.

When prints are to be filed it is necessary to fold them in such a way that the punch holes penetrate only one layer. Methods of folding, → (1) and p. 3.

A0
841 x 1189

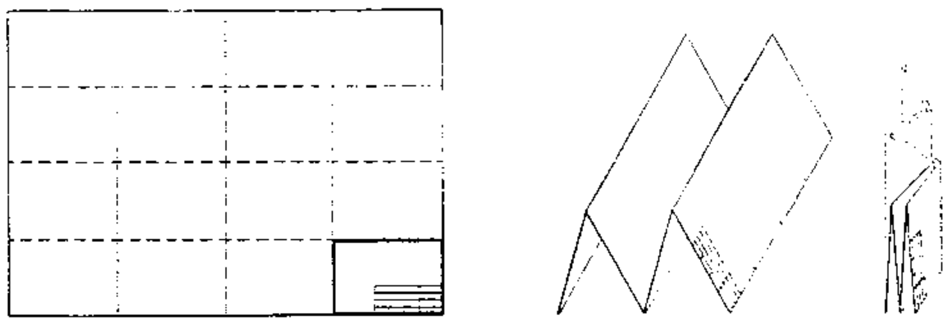

A1
594 x 841

A2
420 x 594

A2
420 x 594

A3
297 x 420

(1) simple folding of drawings

DRAWING SHEETS

(→ BS 1192: 1969)

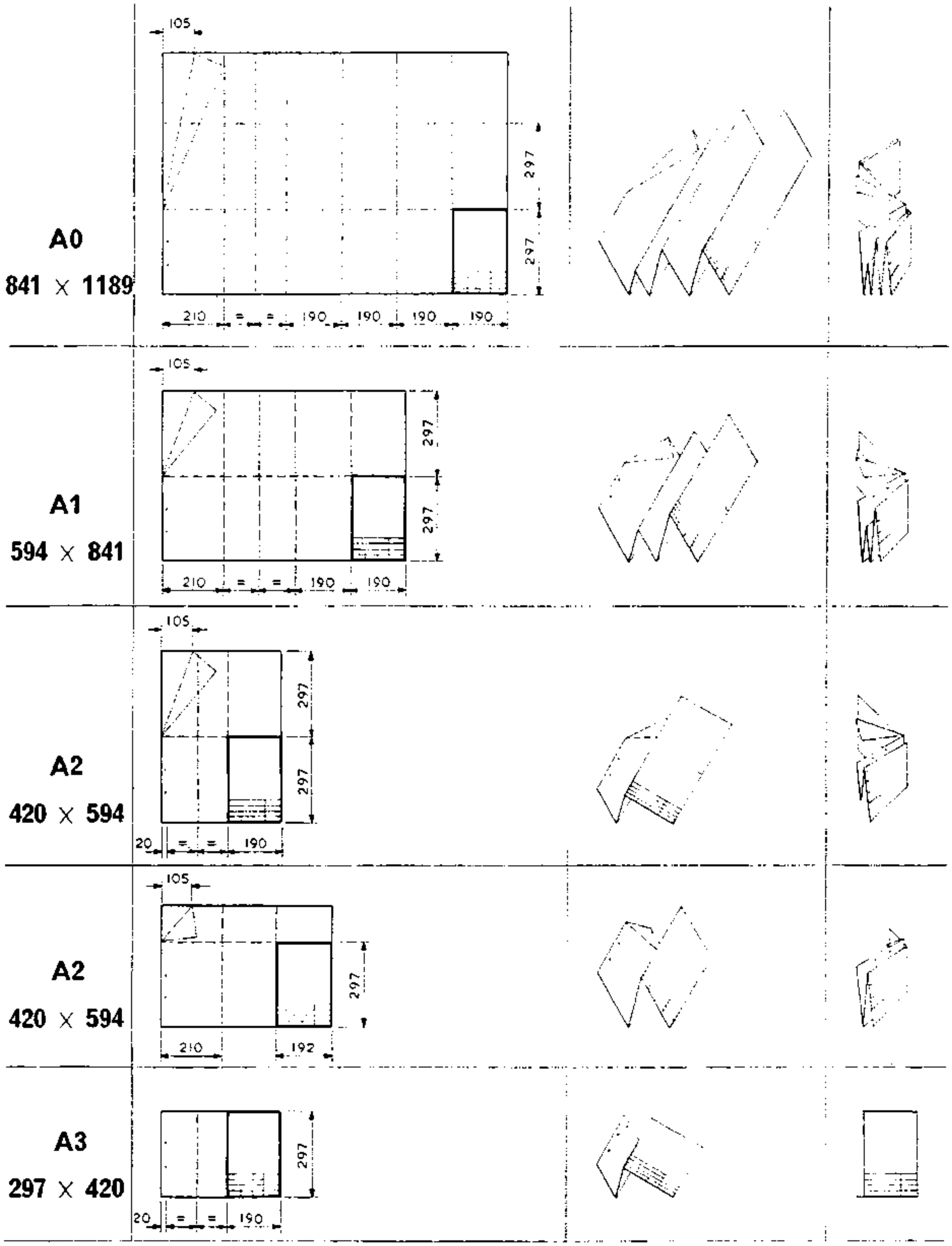

(1) Folding of drawings for filing

AD II compiled : D.VOLKE AUG. '83	DRAWING PRACTICE	ARCH. DRWNG. LECTURE CET 3o43/16.158

LAYOUT and IDENTIFICATION

Layout and identification

(→ BS 1192: 1969)

Layout: every sheet should have filing margin, title and identification panel.

Filing margin: at left hand edge ≥ 20 mm ($\frac{7}{8}$in) wide. Filing **punch marks** and **fold marks** printed as ticks at edges of sheet. Where microfilming likely, → BS 4210.

Title panel: place in bottom right hand corner of sheet to aid reference when prints are filed or folded, → (1), (2).
Include: job title; subject of drawing; scale; date of drawing; job number; SfB and UDC reference if appropriate; name of architect, etc. Panel may also give initials of person drawing, tracing and checking sheet.

Revision suffix should be changed each time drawing is issued after revision.

Printed blank title panels or use of stencils, transfers or rubber stamps save time and labour.

Information panel: note nature and date of each revision, with architect's initials; start at bottom of panel and work upwards. When general notes included, start at top and work down.

Key: on large projects give key diagram showing continuous drawing sheets, with appropriate part blacked in on each relevant drawing.

Orientation: show north point on every plan. When practicable all plans should have same orientation, except for site location plan. For latter, draw with north at top of sheet to aid identification with Ordnance Survey maps.

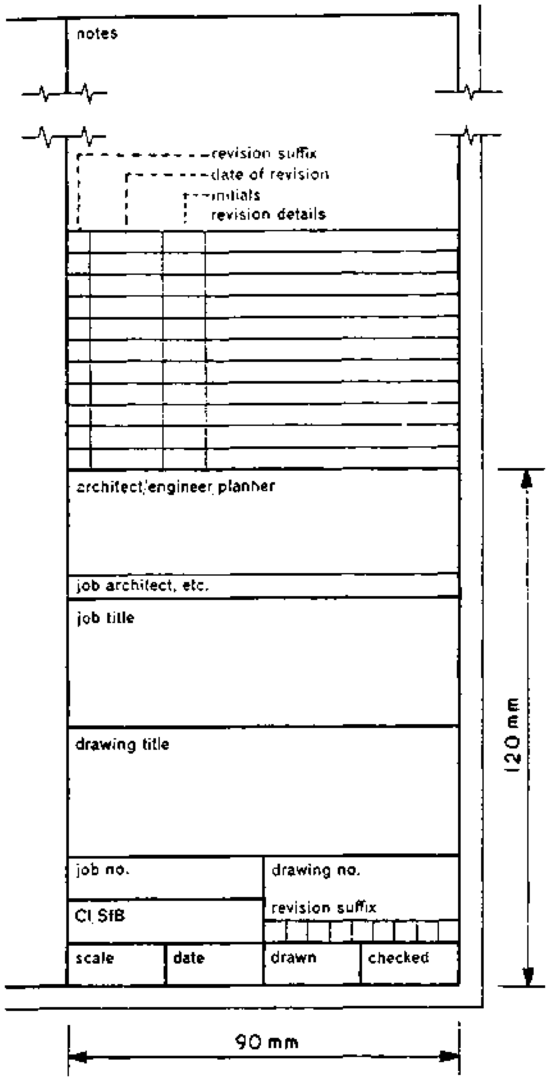

(1) Typical title panels - vertical

(2) Typical title panels - horizontal

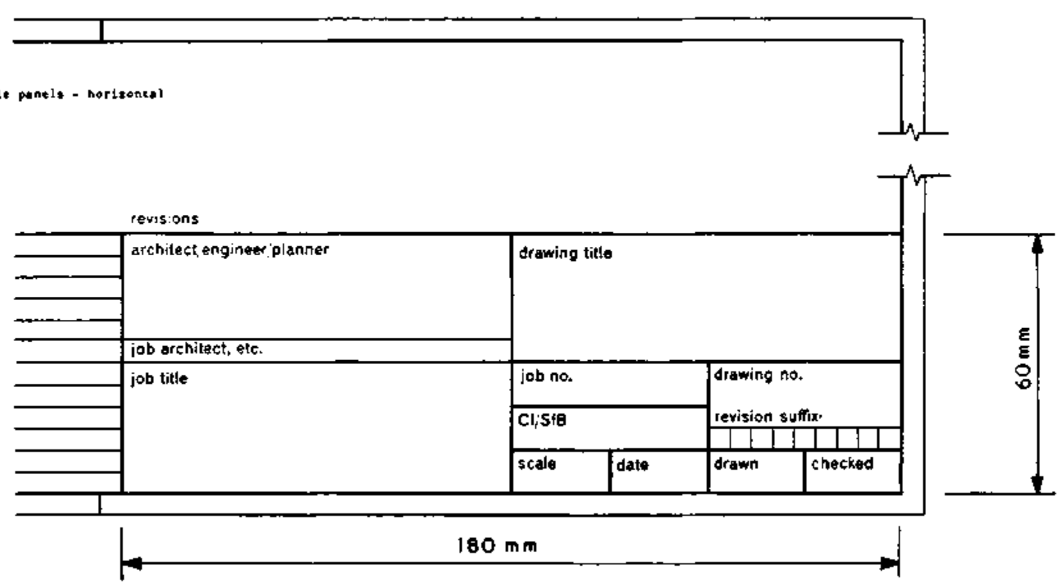

TITLE PANEL

NOTES

REVISIONS

SUFF.	DATE	INICIALS	REVISION DETAILS

TCA TECHNICAL COLLEGE CHUO CHA UFUNDI ARUSHA

JOB TITLE	DRWG. TITLE			
JOB ARCHITECT	REVISION SUFFIX			
CLIENT	JOB No.		DRWG No.	
SIGNATURE	SCALE	DATE	DRAWN	CHECKED

6.2 LEVELS

(→ BS 1192: 1969)

Levels

General
Levels record distance of a position above or below a defined datum.

Datum
A suitable fixed point should be taken as TBM (temporary bench mark) such that all other levels are positive (minus sign is easily misread). This datum should be clearly indicated or described on drawings, and all levels and vertical dimensions related to it. Vertical dimensions in metres to three decimal places (or in feet and decimals of a foot) above this datum. On large jobs, particularly, it is usually necessary to relate job datum to OS datum (OS levels at present in feet). State clearly whether Newlyn or Liverpool Ordnance Datum is used.

OS are preparing bench mark lists giving heights in metres to two places of decimals.

Levels on plan
It is important to differentiate on site layout drawings between existing levels and intended levels:

existing level: x 58.210

intended level: x $\boxed{60.255}$

Exact position to which level applies should be indicated by 'X'

Finished floor levels should be indicated by letters FFL followed by figures of level:

FFL $\boxed{12.335}$

Levels on section and elevation
Use same method as for levels on plan except that level should be projected beyond drawing with arrowhead indicating appropriate line, → (1).

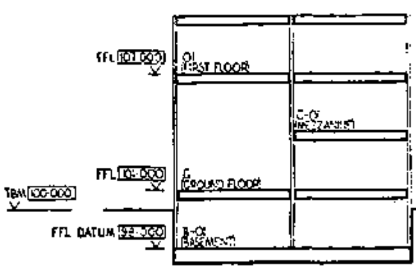

(1) Levels on section and elevation

6.3 REFERENCING

Referencing

Classification and coding of building components and elements shown on drawings may be achieved through use of SfB system (UK application known as CI/SfB; → 'Construction Indexing Manual', published by RIBA, for details of system and its tables).

SfB enables information contained within different kinds of documents, such as bills of quantity, drawings, specifications, texts, trade literature, etc, to be co-ordinated and correlated for maximum benefit of user.

SfB system is a facet system of alpha-numerical symbols forming three tables which may be used individually or in combination to indicate concepts and terms required. Three tables of SfB system cover building elements, components/products, and materials.

Each type of component or element shown on a drawing may be identified by appropriate SfB notation, e.g.:

concrete blocks	Ff2
concrete lintels	Gf2
aluminium sections	Hh4
hardwood sections	Hi3
manholes	(52)
external walls	(21)
windows	(31)
doors	(32)
radiators	(56)

Notations may be combined, e.g.:

external walls, concrete block	(21) Ff2
windows, aluminium	(31) Hh4
doors, hardwood	(32) Hi3

Number and length of component and element notations should be kept to minimum compatible with a rational system of identification for each particular job.

A specific component within any range may be identified by a suffix giving nominal sizes for length, width, height, etc:

concrete block Ff2 400 mm x 100 mm x 200 mm
Ff2 1 ft 4 in x 4 in x 8 in

Alternatively, where principles of modular coordination are applied, such a suffix may give nominal sizes for a component or element in multiples of 100 mm or 4 in (M), e.g.:

concrete block Ff2 4M x 1M x 2M

6.4 ABBREVIAT.

Abbreviations

(→ BS 1192:1969)

Aggregate	agg
Air brick	AB
Aluminium	al
Asbestos	abs
Asbestos cement	abs ct
Asphalt	asph
Bitumen	bit
Boarding	bdg
Brickwork	bwk
BS Universal beam	BSUB
BS Channel	BSC
BS equal angle	BSEA
BS unequal angle	BSUA
BS tee	BST
Bronze metal antique	BMA
Building	bldg
Cast iron	CI
Cement	ct
Chromium plate	CP
Cleaning eye	CE
Column	col
Concrete	conc
Convector	conv
Copper	cu copp
Cupboard	cpd
Damp proof course	DPC
Damp proof membrane	DPM
Discharge pipe	DP
Drawing	dwg
Expanded metal lathing	EML
Foundation	fdn
Fresh air inlet	FAI
Glazed pipe	GP
Granolithic	grano
Hardcore	hc
Hardboard	hdb
Hardwood	hwd
Inspection chamber	IC
Insulation	insul
Invert	inv
Joist	jst
Lighting	ltg
Mild steel	MS
Pitch fibre	PF
Plasterboard	pbd
Polyvinyl acetate	PVA
Polyvinyl chloride	PVC
Radiator	rad
Rainwater head	RWH
Rainwater pipe	RWP
Reinforced concrete	RC
Rodding eye	RE
Satin chrome	SC
Sewers foul	FS
Sewers surface water	SWS
Satin anodised aluminium	SAA
Softwood	swd
Stainless steel	SS
Tongue and groove	T&G
Unglazed pipe	UGP
Vent pipe	VP
Wrought iron	WI

6.5 REPRESENT.

Representation of materials

(→ BS 1192:1969)

Table shows recommended methods of indicating materials on drawings. These methods should only be used where confusion is likely to occur in interpretation of drawings, but in all cases they should be accompanied by a descriptive note, stating type of material, thickness, etc. Existing and proposed work should be clearly indicated. Spacing of hatching lines should be adapted to scale of drawing and should not normally be used on small scale drawings.

Colouring is costly, laborious and conducive to error and consequently to be avoided. Hatching is preferable where it is necessary to show different materials.

Brick
Concrete
Earth
Fibre board
Glass
Hardcore
Loose insulation
Metal
Partition block
Plywood
Screed
Sheet membrane
Stone
Wood (unwrot)
Wood (wrot)

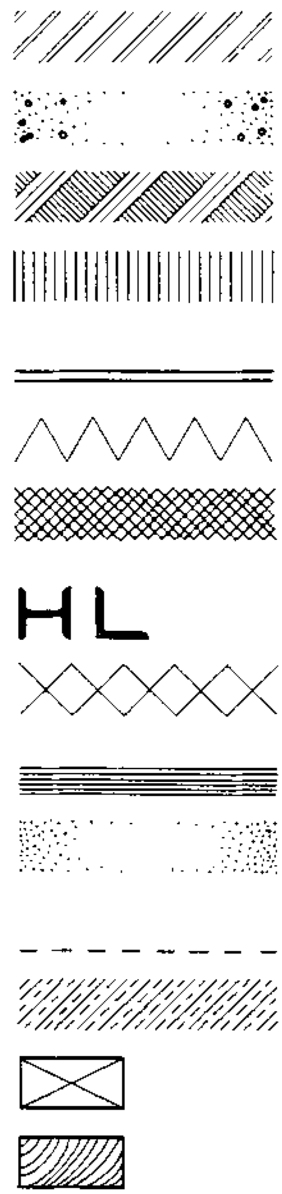

6.6 GRAPHICAL SYMBOLS

(→ BS 1192:1969)

A drawing is a symbolic representation of a real or imagined object. Aspects or parts of a drawing may themselves be symbolically represented. Symbols for this purpose are termed graphical symbols, use of which enables maximum information to be contained within the drawing, clearly and legibly, with minimum effort.

Types of symbols
Principal types used in building drawing practice are graphical. Many of these, as well as other kinds of symbols such as letters, numbers and signs, are covered by British Standards, of which the following are relevant:

BS 108 Graphical symbols for general electrical purposes (power and lighting).

BS 1553 Graphical symbols for engineering:
Part 1 Pipes and valves
Part 4 Heating and ventilating systems.

BS 1635 Graphical symbols for fire protection drawings.

BS 1991 Letter symbols, signs and abbreviations
Part 1 General
Part 4 Structures, materials and soil mechanics.

BS 3939 Graphical symbols for electrical power, telecommunications and electronics diagrams.

Graphical symbols
Building drawing practice requires use of graphical symbols on drawings which are additional to those covered in above British Standards. Examples of most commonly used graphical symbols are given below

GRAPHICAL SYMBOLS AND REPRESENTATION

Draughtsmanship

Description	Symbol	Description	Symbol
Centre to centre	c/c	Existing level on section	⊻ 0·000
Centre line	℄	Finished floor level	FFL
Direction of view	⟶	Ground level	GL
External	ext	Required level on plan	× $\boxed{0{\cdot}000}$
Internal	int	Required level on section	⊻ $\boxed{0{\cdot}000}$
North point		Temporary bench mark	TBM
Modular space	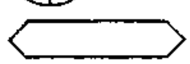	Paved area	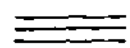
Rise of stair		Grass area	
Rise of ramp	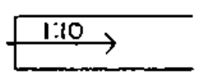	Planted area	
Bench mark	BM	New trees	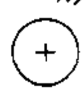
Existing level on plan	× 0·000	Existing trees	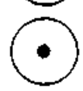
		Existing trees removed	

6.7 HATCHING

HATCHING RULES

1. Draw HATCHING LINES preferably at 45^{o} as thin lines with a spacing of - preferably - not less than 4 mm.

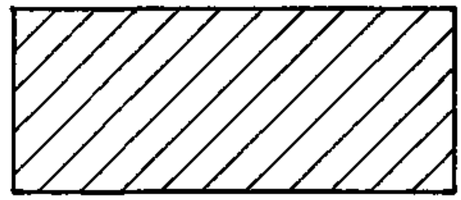

2. If two adjacent parts to be hatched, draw the HATCHING LINES in opposite directions.

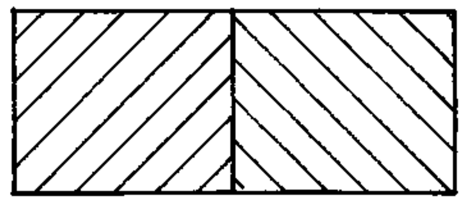

3. Where more than two adjacent parts to be hatched, draw the HATCHING LINES of one area - preferably the smallest - closer together.

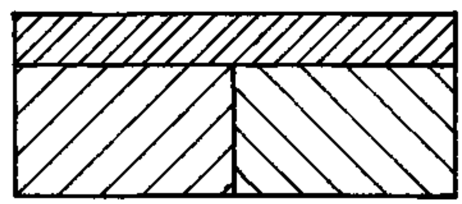

4. In order to simplify distinguishing between more than two adjacent parts, HATCHING LINES drawn at 60^{o} and/or 30^{o} my be used additionaly.

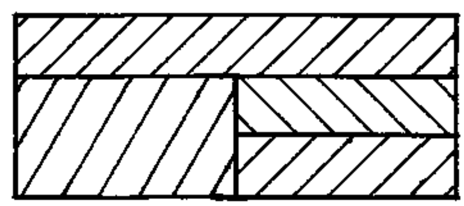

5. Large areas may be hatched along the borderline only.

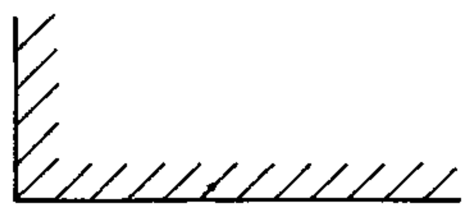

6. If a part is drawn at such an angle that the HATCHING LINES become parallel to one edge of the part, the angle of hatching may be chaused.

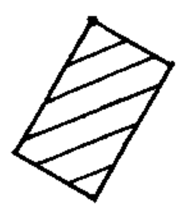

7. Interrupt HATCHING LINES to give space for dimensioning figures, words etc.

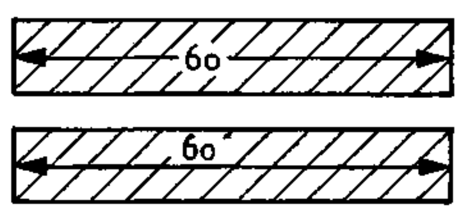

7.APPLICATION for BUILD.PERMIT

7.1 PROCEDURE OF APPLYING FOR PERMISSION TO ERECT A BUILDING

Application for and Allocation of a plot:

a) Request to the (District) Land Officier
b) Land Officier submit all applications to the Urban Planning Committee
c) Plots are allocated by the Urban Planning Committee
d) Right of Occupancy of the plot is issued through the Land - Officier.

Application for Permission to erect a Building

a) Submission of the Application to the Town Council Authority
The application includes:
- A properly filled Form of Application for Permission to erect a Building
- A properly filled Form of Application for Planning Consent.
- 4 sets of drawings:

Blockplan	scale 1:2500 (better 1:1000)
Siteplan	scale 1: 500
All floor plans	scale 1: 100
Sections	scale 1: 100
Elevations	scale 1: 100
R.C. Details	scale 1: 20 - 1: 5

- Schedule of doors, windows, opening arrangements.
- Details of the Drainage system including septic tank and soakage, pit, inspection chambers, gully traps, vent. pipes, etc.

b) Before submitting the Application to the Urban Planning Committe, forms and plans will be checked by:

- the Land Officier
- the Health Officier
- the Town Engineer
- the Town Planning Officier
- the Fire Master

In case the application does not comply with the technical requirements of the Authority the Application may be disapproved and send backs for amendments resubmission to the applicant. After the technical approval, the application will be submitted to the Urban Planning Committee. The Committee approves or disapproves the application and issues the Building Permit.

c) The Building Permit will be sent to the applicant together with one set of plans (with stamp and signature of the Authority) and one set of proceed sheets.

Form of Application for Permission to Erect a Building

FOR OFFICE USE ONLY
Plan submitted ....
Registered No. of Plan ....
Date of Registration ....

To, TOWN DIRECTOR
ARUSHA TOWN COUNCIL
P. O. Box 3013, Arusha

.... 19 ..

I beg to submit herewith Plans, Sections and Elevations for ....

....
(State here if New Building, Alteration or Addition or Sanitary Reconstruction)

....

to be used as ....
(Insert whether a Domestic Building or for what purpose the building will be used)

to be executed by me on Plot No. ....

such plot having frontage to ....

I also submit the following proposed means of construction and other particulars:

External walls to be built of ....

Internal walls to be built of ....

Mortar in walls to be composed of ....

Dampcourse to be of ....

Foundations to be of .... Mortar in foundation composed of ....

Roof to be constructed of ....

Water supply from ....

Drainage to sewer/permeable cesspit/impermeable septic/tank (erase words which do not apply). In the of septic tanks state how the effluent will be disposed of ....

Material of drain pipes ....

Closet accommodation — (state type)

Indoor ....

....

Outdoor ....

Name of Architect or Draughtsman ....

Address of above ....

Name of Builder (if known) ....

Signature of Owner or Agent ....

Address of Owner or Agent ....

SUBMISSION OF PLANS

All Plans to be submitted to the ....

One set of Plans to be made on cloth (paper on cloth is not accepted)

All Drawings to be signed by owner or his agent.

All Drawings to be accompanied by application form duly completed as required by the ....

....

All Drawings to be submitted in duplicate and to be of a quality approved by the ....

....

DRAWINGS REQUIRED

Scale 1:100 — Plans of each floor or level; having thickness of wall shown in figures. Section through Building (more than one if building is large or if required by Authority).

Scale 1:50 — Sections are required of Floors and Roofs, Verandas, and Balconies, Stairs, iron or steel Beams, Pillar and Principal Timbers, Pavements, Openings, etc., on public Streets

Colours — The above drawings are to be coloured thus:

Brick, stone or concrete	Red
Fire-proofing, damp-proofing or impervious floors of stables, closets, etc.	Thick black line
Work to be removed	Dotted line
Steel or iron	Blue lines, in skeleton
Work existing	Natural Colour

Scale 1:500 — Block plan as follows:

To show plot on which buildings are to be erected.

To show plots immediately adjoining and names of the proprietors thereof.

To show buildings, existing or proposed. on all these plots.

To show numbers of plots, names of streets, and township.

To indicate of what materials existing buildings are composed, i.e. bricks wood and iron, or stone, etc.

To show lines of drainage, giving size and fall of drains.

To show level and width of the steet or streets upon which the proposed buildings will abut with reference to their ground-floor level.

FORMULARS

for office

Date	Application No.	Zone	Category

FORM A

APPLICATION FOR PLANNING CONSENT

The Town and Country Planning Ordinance

(All development other than Use classes A (d), A (e) and A (f)

This form should be submitted in duplicate

To: The TOWN DIRECTOR

1. I hereby make application to the .... Area Planning Committee for planning consent to the following development –

....

2. Location and planning zone of proposed development ....

....

....

3. Development (delete as necessary).

(a) Category I (Sub division and layout of land)

Number of plots proposed and proposed use of any buildings to be erected thereon

....

(b) Category II (Change of use of land or premises).
Number of buildings effected (if any) and changes of use proposed ....

....

....

(c) Category III (any building, engineering or mining work in, on under or over any land or premises)

....

(d) Previous use: purpose for which building or land was last used

....

(e) Details of plot or land . Area ....

acres/sq feet Frontage to road ....

feet. Width of street opposite ....

feet. Building line or set back adjoining building ....

.... feet.

4. My interest in land is ....

....

5. I enclose three copies of plans illustrating the proposals

.... Signature of Applicant

Address

P. O. Box 3013
Phone: 3631/2

ARUSHA TOWN COUNCIL
TOWN HALL

BUILDING PERMIT

The Township (Building) Rules 1930

Permission is hereby given to .... to

erect a building as a ....

....

on ....

....

in accordance with the plan (No. ....) attached hereto and with all conditions imposed by the above Rules.

.... 197...... TOWN DIRECTOR

N. B.:- Your attention is invited to the Electricity Rules, 1953, which require you to notify The Tanganyika Electric Supply Company, Limited, as well as the Electrical Engineer, General Post Office, before Commencing to erect a building; should the electric wires in the street be accessible from any portion of such building where erected or from the scaffolding required during its construction.

Building Rules 5 (6). This permit is subject to the fulfilment of the covenants entered into between .... lessee of the above mentioned plot and the Authority, concerning connection of the building (s) to the main sewerage system when this is applicable.

Building Rule 5 (6), (G. N. 45/1955). The prescribed number of occupants permitted to reside in the building to which this Permit refers is:

....

....

(Note—Two children may be counted as one adult person)

YOU ARE HEREBY WARNED THAT APPROVAL OF PLANS BY THE AUTHORITY DOES NOT IMPLY THAT ERECTION OF BUILDINGS IN ACCORDANCE WITH THESE PLANS WILL NECESSARILY BE IN ACCORDANCE WITH THE CONDITIONS OF THE RIGHT OF OCCUPANCY UNDER WHICH YOU HOLD THE LAND

FORMULARS

E

This form MUST be submitted in its proper sequence prior to any **rther work proceeding.**

o. 1885

.... Date..............................

....

Plot No. Block No. Area

I hereby give notice that the work of construction has now roceeded to wall plate level.

lan No. **Refers**

Signed..............................

WO DAYS NOTICE REQUIRED

F

This form MUST be submitted in its proper sequence prior to any **rther work proceeding.**

o. 1885

.... Date..............................

....

Plot No. Block No. Area

I hereby give notice that all the roofing timbers in the building re in position and are ready for examination.

lan No. **Refers**

Signed..............................

WO DAYS NOTICE REQUIRED

G

This form MUST be submitted in its proper sequence prior to any further work proceeding.

No 1885

.... Date..............................

....

Plot No. Block No. Area

I hereby give notice that the drainage and sanitary work are ready for testing.

Plan No. **Refers**

Signed..............................

TWO DAYS NOTICE REQUIRED

H

This form MUST be submitted in its proper sequence prior to any further work proceeding.

No. 1885

.... Date..............................

....

Plot No. Block No. Area

I hereby give notice that the whole of the work has been completed and I hereby apply for a certificate of occupation in respect of the premises.

Plan No. **Refers**

Signed..............................

SEVEN DAYS NOTICE REQUIRED

A

This form MUST be submitted in its proper sequence prior to any further work proceeding.

No. 1885

.... Date..............................

....

Plot No. Block No. Area

I hereby give notice that I intend commence the work approved in

Plan No. ....on..............................197......

Signed..............................

TWO DAYS NOTICE REQUIRED

B

This form MUST be submitted in its proper sequence prior to any further work proceeding.

No. 1885

.... Date..............................

....

Plot No. Block No. Area

I hereby give notice that the foundation trenches are now ready for inspection.

Plan No. **Refers**

Signed..............................

TWO DAYS NOTICE REQUIRED

C

This form MUST be submitted in its proper sequence prior to any further work proceeding.

No. 1885

.... Date..............................

....

Plot No. Block No. Area

I hereby give notice that the foundation concrete in now ready for inspection.

Plan No. **Refers**

Signed..............................

TWO DAYS NOTICE REQUIRED

D

This form MUST be submitted in its proper sequence prior to any further work proceeding.

No. 1885

.... Date..............................

....

Plot No. Block No. Area

I hereby give notice that the ground floor concrete and damp proof course are ready for inspection.

Plan No. **Refers**

Signed..............................

TWO DAYS NOTICE REQUIRED

4. CONTRACT PLANNING and SITE ORGANISATION

CONTENTS:

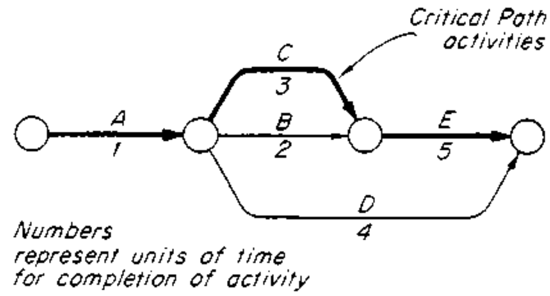

Dependencies:

E is dependent on activities C, B and A being completed

C and B are dependent on A being completed

D is dependent on A being completed

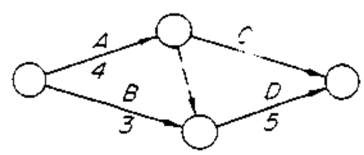

A	4
B	3
C	1
D	5

Duration

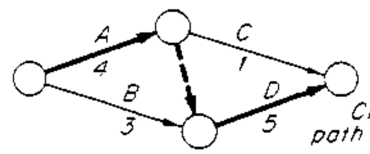

— shows the Critical Path — longest path through the network

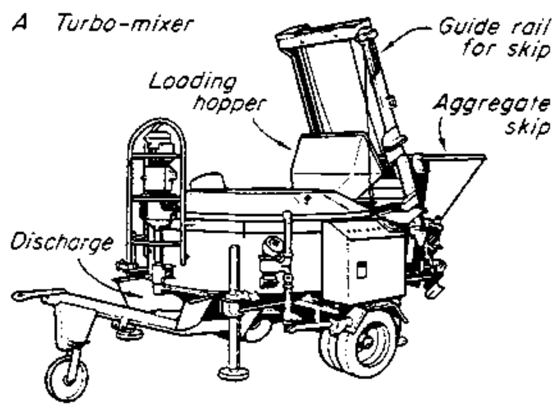

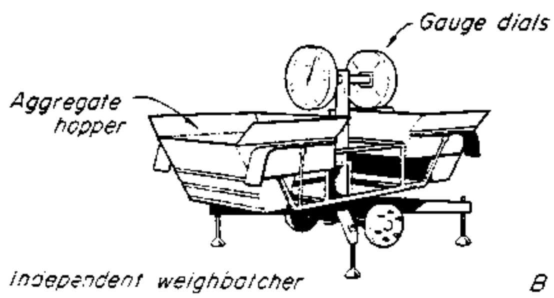

REFERENCES:

1. Jack Stroud Foster
   MITCHELL`S BUILDING CONSTRUCTION
   "Structure and Fabric"
   Part 1 and 2

2. W. G. Nash
   "Brickwork 3 "

3. R. Chudley
   "Construction technology"
   Volume 2 and 4

4. R. L. Fullerton
   "Building Construction in Warm Climates"
   Volume 1 and 2

4. CONTRACT PLANNING and SITE ORGANISATION

4. CONTRACT PLANNING AND SITE ORGANIZATION

Buildings, and consequently their construction, have become more and more complex and the proper management of a contract as well as the control of cost (on the part of the architect at design stage and the contracter during erection) are more than essential.

Because mechanisation of building operations and the use of expensive plant has increased, the contractor must obtain maximum use of the plant and speed the construction of the job in order to keep his costs to a minimum. The design/erection continuum must be seen as a production process from inception to completion and there must be a programme on which the job may be organized, against which performance may be assessed and within which control may be exercised.

Contract planning and site organization, together with general control are the construction aspects of production management which itself is a part of overall management in building.

PLANNING makes efficient and economical use of labour, machines and materials.

ORGANIZATION is the means of delegating tasks

CONTROL enables planning and organization to be effective.

4.1 CONTRACT PLANNING

4.1 CONTRACT PLANNING

Contract Planning involves working out a PLAN OF COMPAIGN or PROGRAMME for the contract as a whole and assembling the necessary data.

Such a programme is to promote the flow of the various building operarions during the course of erection, by planning in advance
- the times and sequences of all operations
- the requirements in labour
- the requirements in materials
- the requirements in equipment.

The BUILDING RESEARCH STATION DIGEST 91 states that such a programme should:

a) show the quickest and cheapest method of carrying out the work consistent with the available recources of the builder.
b) by the proper phasing of operations with balanced labour gangs in all trades, ensure continous productive work for all the operatives employed and reduce unproductive time to a minimum.

c) provide an assessment of the level of productivityin all trades
d) determine attandance dates, and periods for all subcontractor^s work
e) provide information on material quantities and essential delivery dates, the quantity and capacity of the plant required and the periods it will be on site.
f) provide, at any time during the contract, a simple and rapid method of measuring progress for the builders information for the architect´s periodical, for the valuation of work for accounting purposes.

If a builders tender is to be realistic, planning must start at the estimating stage.
The following considerations should be taken into account:
- use of the most economic methods for each operation
- sequence and timing of the operations
- resources at the contractors disposal
- use of hand or mechanical methods, type of plant
- space available and best positions for the various machines to be used.
- the best methods of handling material and most suitable places on the site for the storage of materials and for the placing of hut
- suitable points of access to the site for lorries and machines.

4.1.1 BAR CHART

4.1.1 BAR CHART

A typical site orientated control device is the GANTT CHART or BAR CHART which allows a fairly simple and easily read plan of perations to be made available to all site personnel against which may be plotted actual performances. However, this device only takes into account one of the resources - TIME - and unless further schedules of the recources needed for each operation are also available (adjacent ot the BAR CHART) it does not inform on the critical relationships between the various activities nor does it enable procedures involving a number of variables to be optimised since the complex interrelationships affecting the outcome of any plan (or alteration of plan) are not readily evident or quantifiale. (see fig.)
This can be achieved by means of a technique known as NETWORK ANALYSIS.

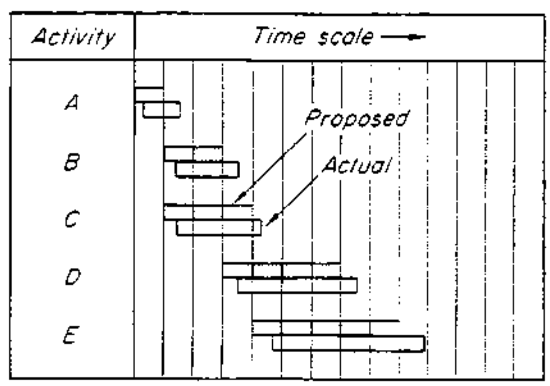

4.1.2 NETWORK ANALYSIS

4.1.2 NETWORK ANALYSIS

The essential difference between analysing a production problem by NETWORK and LINEAR or PARALLEL LINEAR methods lies in the identification of the dependency between operation.

This approach leads to interelated networks through which certain sequences can be seen to be 'critical' to the anticipated outcome in that they occupy the longes and irreducible time necessary to execute the project (or parts of the project). to which they are necessary.

The fig. shows this in a simple set of 5 intorelated activities A,B,C, D,E of time values 1,2,3,4 and 5 days.

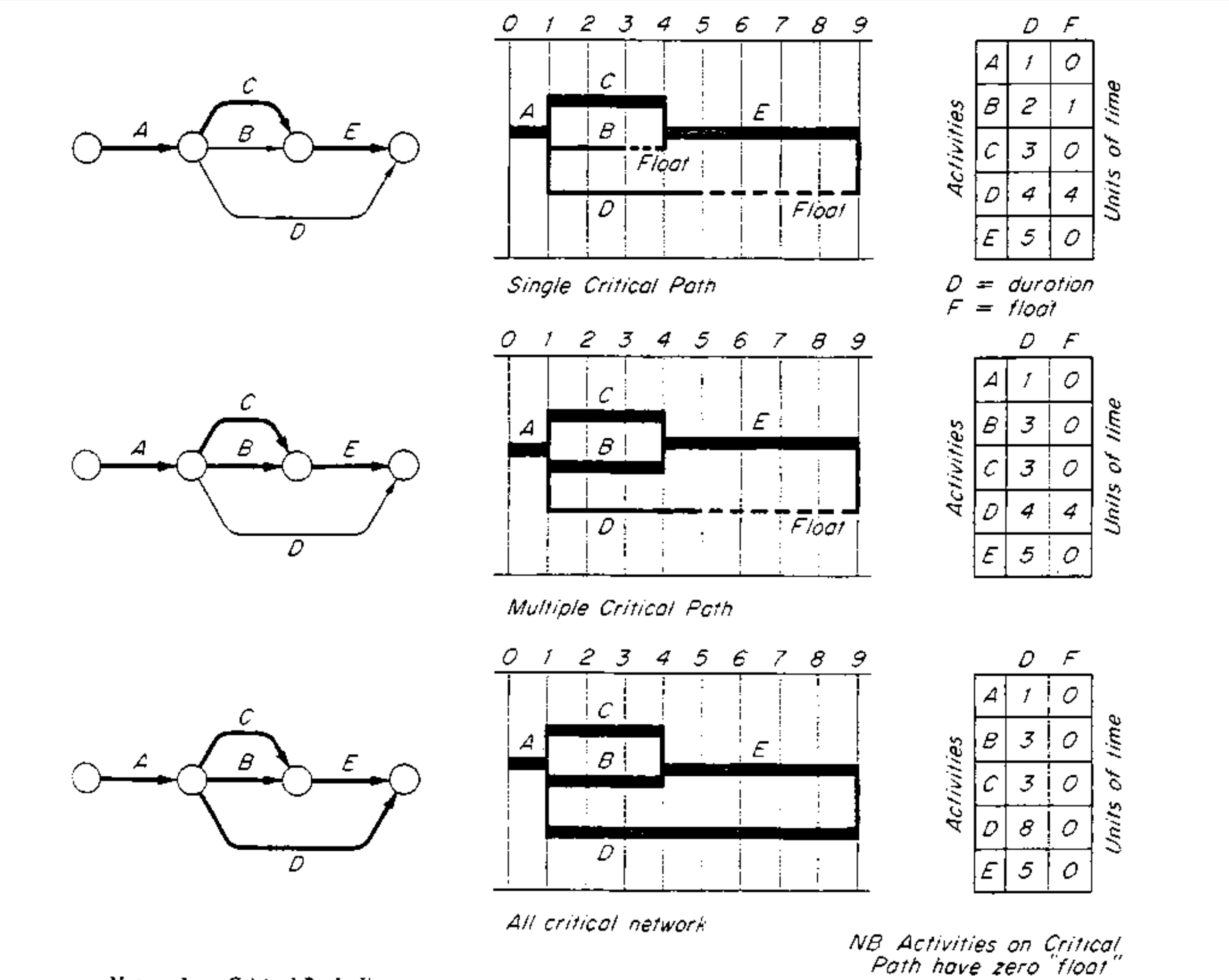

Network or Critical Path diagrams

ARROW DIAGRAM

The way how to prepare a NETWORK in the form of an ARROW DIAGRAM is described in the following:

1) Project to be broken down into a series of stages (or elements of work) called
ACTIVITIES
represented by ARROWS (Length not important)
Head of arrow = finish of activity

2) Any junctions of activities are called
EVENTS
represented by CIRCLES.
An event indicates the completion of one activity and the start of the next (except first and last!)

3) Example: 5 operations carried out continuously:

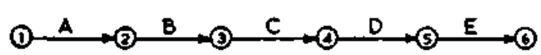

4) Each activity may be identified by the numbers of the beginning and end as follows:

Activity	*Identity*
A	1–2
B	2–3
C	3–4
D	4–5
E	5–6

5) If these 5 operations had been started and finished at the same time, it is not convenient to show them as follows:

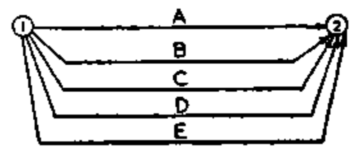

because each has the same identity.

Therefore, to give each a seperate identity, DUMMY ACTIVITIES must be introduced (dotted lines)

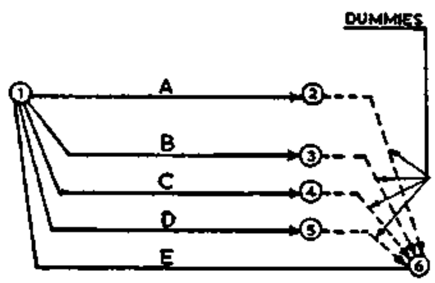

ACTIVITY	INDENTITY
A	1 - 2
B	1 - 3
C	1 - 4
D	1 - 5
E	1 - 6
DUMMY	2 - 6
DUMMY	3 - 6
DUMMY	4 - 6
DUMMY	5 - 6

A dummy arrow has no duration and shows only the logical relationship which cannot be shown by activity arrows (no time, no recources, they have only transfer information from one event to another)
Arrows should always be identified by ascending order of numbers (lower number: the tail, higher number : the head).

6) Which questions should be asked, when setting out an arrow diagram for a project?

a) what controls the start of each activity?
b) what controls its finish or end?
c) what job or jobs must be done before the next activity can be started?
d) what jobs must follow the activity?
e) what jobs can run concurrently?

7) Examples (should be thoroughly understood)	EXAMPLES
1 Activity X depends upon activity	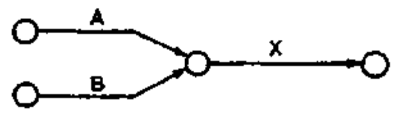
2 Activity X and Y depend upon activities A and B	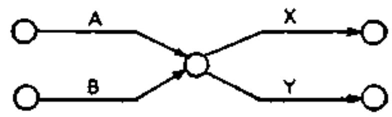
3 Activity X depends upon activities A and B and activity Y depends upon B only	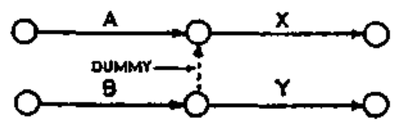
4 Activity Y depends upon activities A and B and activity X depends upon A only	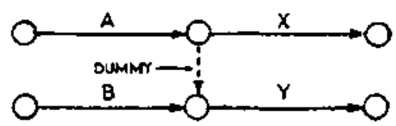
5 Activity X depends upon A and B and activity Y depends upon B and C	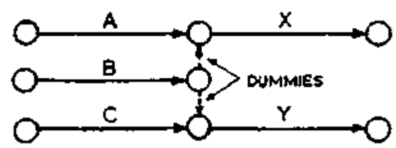
6 Activity X depends upon activities A and B, activity Z depends upon activities B and C and activity Y depends upon B only	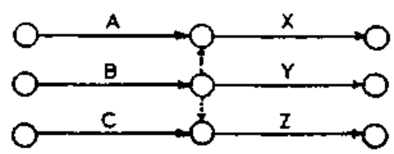
7 Activity Z depends upon activities A,B,C, activity X upon A only and activity Y upon A and B	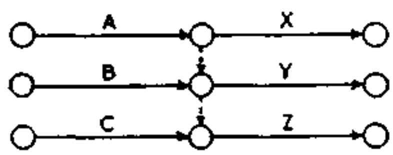
8 Activity Y depends upon activities A,B,C, activity X depends upon A only and activity Z depends upon activity C only	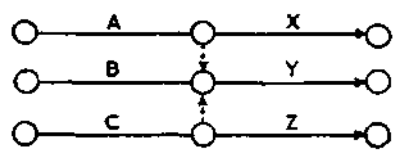
9 Activity X depends upon activity A, activity Y depends upon activities A and B and activity Z depends upon activities B and C	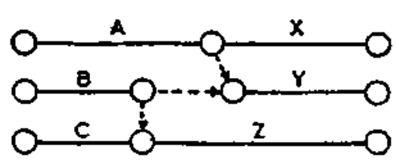

8) Example: Errecting a corner

Activities:
1 raise scaffold
2 deliver bricks from stack to scaffold
3 place mortar boards
4 mix mortar
5 deliver mortar to scaffold
6 build corner

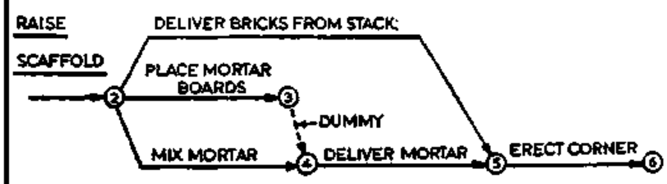

9) The time element
We have so far been concerned only with the placing of the activities in a logical order.

Now the time element has to be considered, and to be applied to the network, in order to obtain the EVENT IMES and the TOTAL PROJECT TIME.
- The duration of the activities should be written under each arrow.
  these items must be very carefully estimated (according to the work content contained within each activity) otherwise the network would not be of any value.

TIME ELEMENT

10) Earliest starting times
When the durations of the activities have been entered, the times of starting and finishing the events can be calculated. The earliest times for starting and finishing activities can be found by adding the duration of each activity to the finishing time of the previous activity. Begin at 0 with the first activity and calculate each path separately. Where two ore more paths meet at an event or node, the longer or longest total time must be taken as the earliest starting time to the next activity.

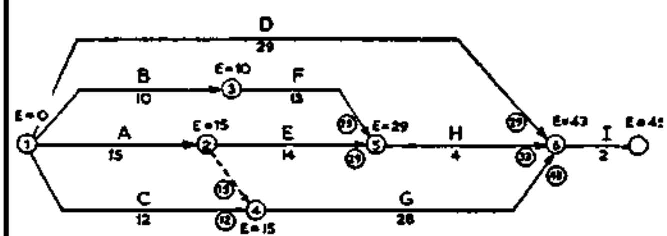

E = Earliest starting time

	ACTIVITY	DURATION	EARLIEST START	EARLIEST FINISH
A	1–2	15 days	0	15
B	1–3	10 days	0	10
C	1–4	12 days	0	12
D	1–6	29 days	0	29
	2–4	dummy	15	15
E	2–5	14 days	15	29
F	3–5	13 days	10	23
G	4–6	28 days	15	43
H	5–6	4 days	29	33
I	6–7	2 days	43	45

11) Latest starting times
This is a similar analysis carried out only in a reverse direction, which means beginning at the last event time and working backwards by deducting the activity time from the end event time. Where two or more paths meet at an event, the shorter or shortest time is adopted for the calculation of the latest starting time. The total times for each path have been indicated by the figures in circles, and it will be seen that the highest figures have been taken in each case.

12) Latest finishing times
The times for each path have been shown in circles as before, but this time the lowest figure have been used in each case.
It is most important that the dummy activity is taken into account when calculating the earliest starting and latest finishing times. These times could have been analysed as before, but in this case the calculating is started at the bottom of the table and the durations are deducted from the latest finishing times.

			LATEST	
	ACTIVITY	DURATION	START	FINISH
A	1–2	15 days	0	15
B	1–3	10 days	16	26
C	1–4	12 days	3	15
D	1–6	29 days	14	43
	2–4	dummy	15	15
E	2–5	14 days	25	39
F	3–5	13 days	26	39
G	4–6	28 days	15	43
H	5–6	4 days	39	43
I	6–7	2 days	43	45

start here

The two tables can now be combined as follows

			EARLIEST		LATEST	
ACTIVITY		DURATION	START	FINISH	START	FINISH
A	1–2	15 days	0	15	0	15
B	1–3	10 days	0	10	16	26
C	1–4	12 days	0	12	3	15
D	1–6	29 days	0	29	14	43
	2–4	dummy	15	15	15	15
E	2–5	14 days	15	29	25	39
F	3–5	13 days	10	23	26	39
G	4–6	28 days	15	43	15	43
H	5–6	4 days	29	33	39	43
I	6–7	2 days	43	45	43	45

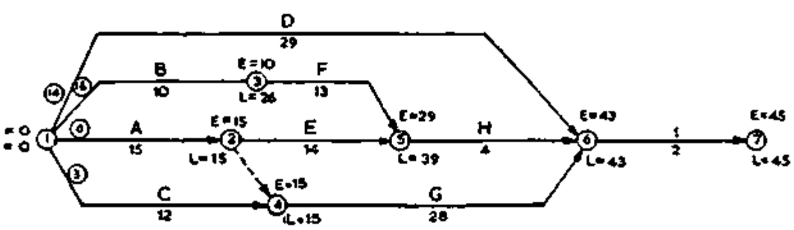

L = Latest finishing times

13) Floating times
From the diagrams and the analyses it will be seen that, if the earliest starting times are deducted from the latest finishing times, some activities have a greater length of time available for carrying out the activity then the work content requires. The spare time in each case is called the total float.
The total float for each activity is calculated as follows:
Latest finishing time - earliest starting time - duration of the activity.

14) Critical path
Where there is a zero float against an activity, this activity will be a critical item. This means that such an item must not be delayed otherwise it will delay the whole project. These activities will form a continous chain through the network, and this chain is called CRITICAL PATH in a network.

The critical path includes the dummy activity. All of the other activities have longer times than the durations need.

Besides TIME (as the main planner´s parameter) other factors such as COST, LABOUR and MATERIAL AVAILABILITY, the DEMAND of other Projects under the planner´s control will affect the final assesment of times to be ascribed to the constituent activities of network.

ACTIVITY		DURATION	EARLIEST START	EARLIEST FINISH	LATEST START	LATEST FINISH	TOTAL FLOAT
A	1–2	15 days	0	15	0	15	0
B	1–3	10 days	0	10	16	26	16
C	1–4	12 days	0	12	3	15	3
D	1–6	29 days	0	29	14	43	14
	2–4	dummy	15	15	15	15	0
E	2–5	14 days	15	29	25	39	10
F	3–5	13 days	10	23	26	39	16
G	4–6	28 days	15	43	15	43	0
H	5–6	4 days	29	33	39	43	10
I	6–7	2 days	43	45	43	45	0

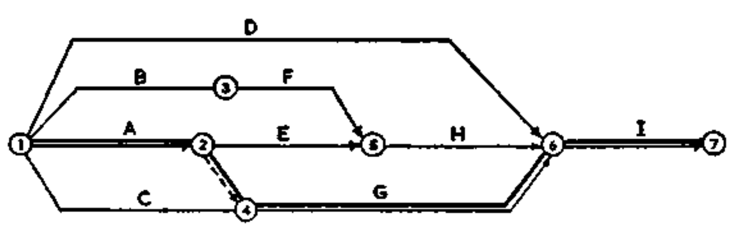

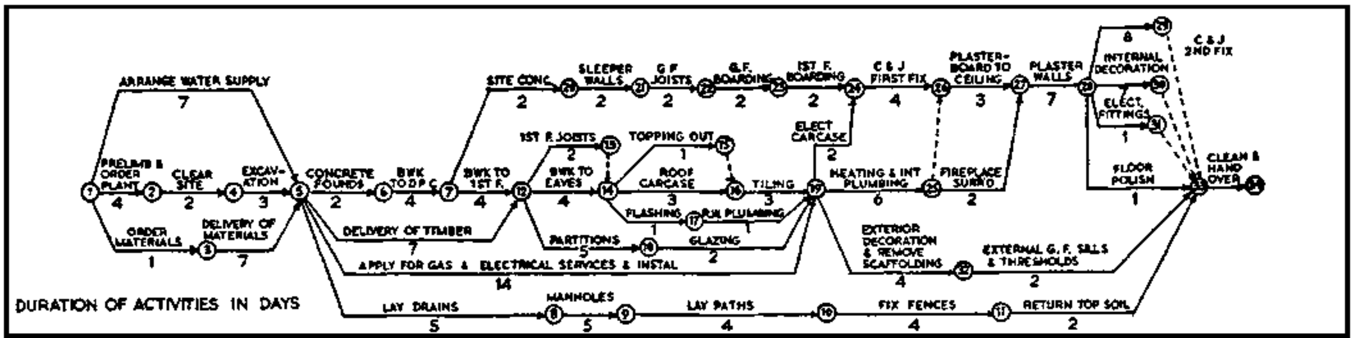

ACTIVITY	NO.	DURATION	EARLIEST START	EARLIEST FINISH	LATEST START	LATEST FINISH	TOTAL FLOAT
Prelims and order plant	1–2	4 days	0	4	0	4	0*
Order material	1–3	1 day	0	1	1	2	1
Arrange water supply	1–5	7 days	0	7	2	9	2
Clear site	2–4	2 days	4	6	4	6	0*
Delivery of materials	3–5	7 days	1	8	2	9	1
Excavation	4–5	3 days	6	9	6	9	0*
Concrete foundations	5–6	2 days	9	11	9	11	0*
Lay drains	5–8	5 days	9	14	32	37	23
Delivery of timber	5–12	7 days	9	16	12	19	3
Gas and electrical services	5–19	14 days	9	23	15	29	6
Bwk up to d.p.c.	6–7	4 days	11	15	11	15	0*
Bwk to 1st floor level	7–12	4 days	15	19	15	19	0*
Site concrete	7–20	2 days	15	17	21	23	6
Manholes	8–9	5 days	14	19	37	42	23
Lay paths	9–10	4 days	19	23	42	47	23
Fix fences	10–11	4 days	23	27	47	51	24
Return top-soil	11–33	2 days	27	29	51	53	24
1st floor joists	12–13	2 days	19	21	25	27	6
Bwk to eaves	12–14	4 days	19	23	19	23	0*
Partitions	12–18	5 days	19	24	22	27	3
Dummy	13–14		21	21	27	27	6
Topping out	14–15	1 day	23	24	25	26	2
Roof carcase	14–16	3 days	23	26	23	26	0*
Flashings	14–17	1 day	23	24	27	28	4
Dummy	15–16		24	24	26	26	2
Tiling	16–19	3 days	26	29	26	29	0*
R.W. plumbing	17–19	1 day	24	25	28	29	4
Glazing	18–19	2 days	24	26	27	29	3
Electrical carcase	19–24	2 days	29	31	29	31	0*
Heating and internal plumbing	19–25	6 days	29	35	29	35	0*
External decorate, etc.	19–32	4 days	29	33	47	51	18
Sleeper walls	20–21	2 days	17	19	23	25	6
G.F. floor joists	21–22	2 days	19	21	25	27	6
G.F. floor boards	22–23	2 days	21	23	27	29	6
1st F. floor boards	23–24	2 days	23	25	29	31	6
C & J 1st fixing	24–26	4 days	31	35	31	35	0*
Dummy	25–26		35	35	35	35	0*
Fireplace surround	25–27	2 days	35	37	36	38	1
Plasterboard to ceilings	26–27	3 days	35	38	35	38	0*
Plaster to walls	27–28	7 days	38	45	38	45	0*
C & J 2nd fixing and fittings	28–29	8 days	45	53	45	53	0*
Internal decoration	28–30	7 days	45	52	46	53	1
Electrical fittings	28–31	1 day	45	46	52	53	7
Polish floors	28–33	1 day	45	46	52	53	7
Dummy	29–33		53	53	53	53	0*
Dummy	30–33		52	52	53	53	1
Dummy	31–33		46	46	53	53	7
Ext. G.F. sills and thresholds	32–33	2 days	33	35	51	53	18
Clean and hand over	33–34	2 days	53	55	53	55	0*

15) Time/cost optimisation
This technique explores the possibilities of altering production time in order to optimise the costs.
In building work:
increased speed of production leads to increased cost (due to having to use more operatives, and /or machinery, or to pay high rates).

Any reduction of the activity times on the critical path will reduce the overall production time, but will probably reduce the 'float' on other activities to the point that they also become critical (case 1) Activities A,B,C,D,E are given to be carried out in 'normal' times shown in column X. Activities A,C, and E are capable of being carried out by different means at 'crash' times for increased rates shown in column Y. It is then possible to define three basic outcomes from the application of these figures:
- normal cost programme (case 1)
- all 'crash'programme (case 5)
- best time/least cost programme (case 4)

Case 1

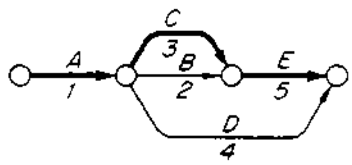

9 days

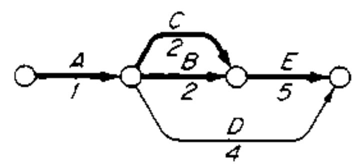

8 days

Case 2

Cost data X Y

Activity	Dur'n	Cost	Dur'n	Cost	
A	1	120	½	200	CC
B	2	80	2	80	
C	3	100	2	150	CC
D	4	60	4	60	
E	5	200	3	300	CC

CC = crash costs

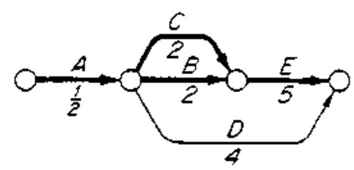

7½ days

Case 3

I.C = rate of Indirect Costs – 70 00 per day

Activity	Duration (days)				
	9	8	7½	6	5½
A	120	120	200	120	200
B	80	80	80	80	80
C	100	150	150	150	150
D	60	60	60	60	60
E	200	200	200	300	300
I.C	630	560	525	420	385
Totals	1190	1170	1215	1130	1175

Summary of cases 1 – 5 — Best time for least cost

Time-cost optimisation

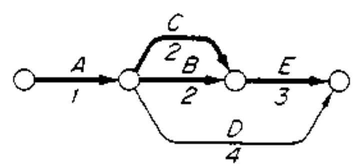

6 days

Case 4

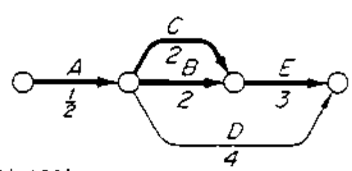

5½ days

Case 5

16) Resource levelling and control

This technique enables a planner to assess the requirements of varous resources to serve any given network of activities and to utilise 'float' in uncritical activities to optimise his use of resources or to reduce imbalances of resource demand.

- The technique ascribes the various resources to each activity and by comparison with established norms identifies excessive demands.
- It is possible to reposition activities requiring excessive use of resources and to balance the total requirements within the resources available or at least to reduce the time of excessive demand.
- The repositioning of certain activities will often render them critical when they are taken together with fixed waiting periods necessary to the planned use of resources.

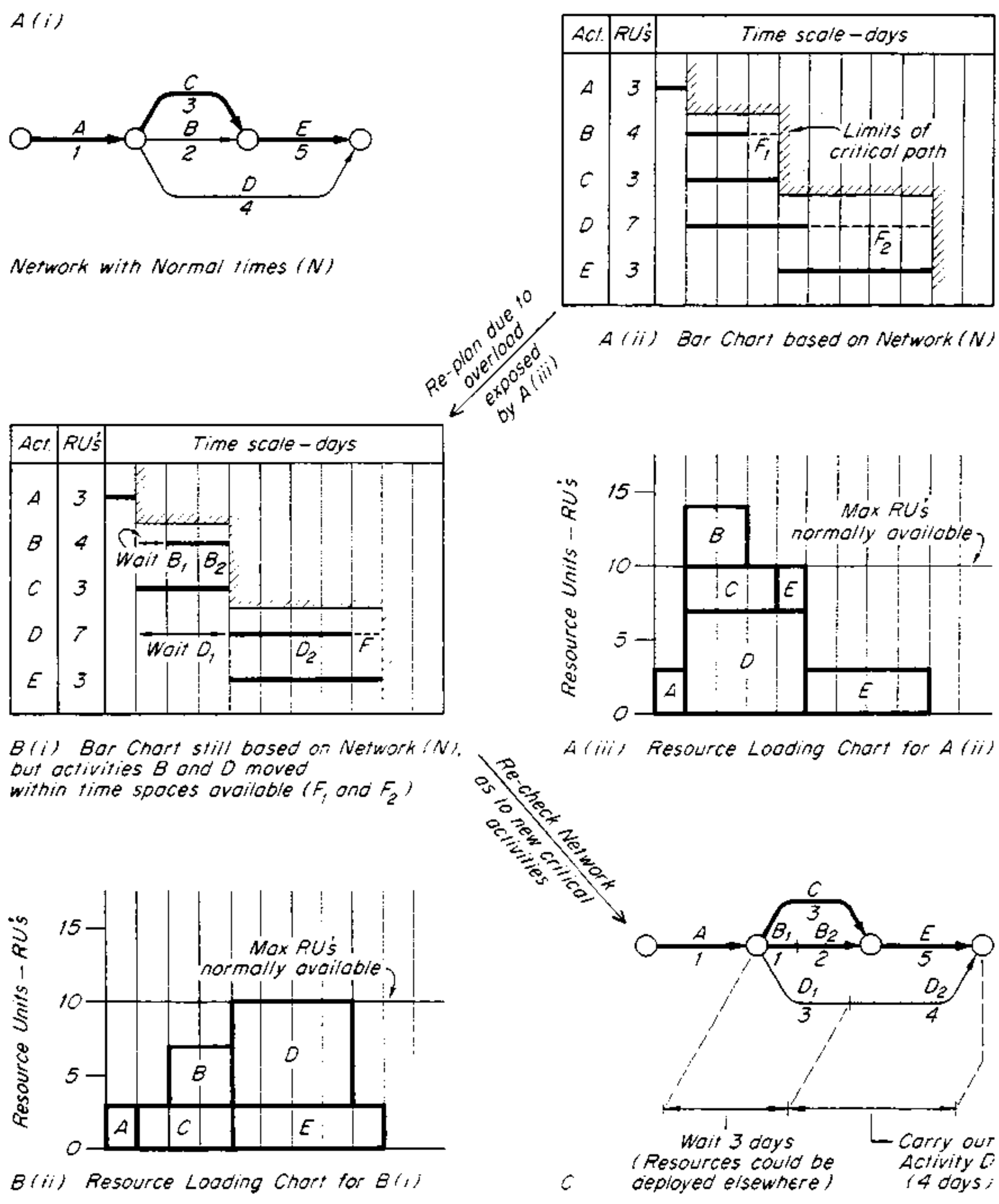

Network with Normal times (N)

A (ii) Bar Chart based on Network (N)

B (i) Bar Chart still based on Network (N), but activities B and D moved within time spaces available (F_1 and F_2)

A (iii) Resource Loading Chart for A (ii)

B (ii) Resource Loading Chart for B (i)

C

This technique is illustrated in fig.
The network A (i) yields the scaled network in bar chart form A(ii)
By allocating the resource units - RU's - for each activity, a resource loading diagram (A(iii) can be prepared.
In this case it shows an excetive demand of four RU's above the resource units normally available during the second and third days, due to activities B and D coming together.
B (i) shows the repositioning of activities B and D in the excess times available for their execution and a resulting 'levelling' of the loading diagram to bring the requirements for resources within the limits of normal availibility as in B (ii).
This manoeuvre involves specific positioning of waiting periods B_1 and D_1 and examination of the resulting network at C shows that these constrains on the commencement of activities B_2 and D_2 leads to the former becoming critical and reduces the float of the latter to one day only.

The foregoing brief description of some of the uses of network analysis has been based on a simplified description of the network involved. For further informations one of the many books dealing specially with these techniques should be consulted.

The most useful aspect of network analysis lies in exercising the logic used to set up the basic network of activities since the planner has a full knowledge of the practical consequences of any sequence of activities and the importance of their relationships. This aspect of a network approach to planning is illustrated in the method of presentation of the logic known as a Precedence Diagram. The fig. shows a typical network restated in this form which eliminates the need for dummy activities normally used in conventional networks to indicate dependency.

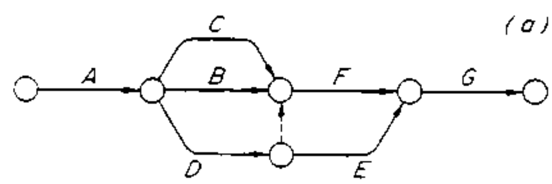

(a)

Dependencies:
C, B and D depend on A being completed
F depends on B, C and D being completed
E depends on D being completed
G depends on F and E being completed

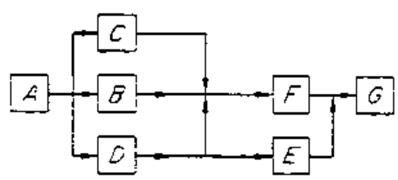

Precedence diagram (b)

4.1.3 The OVERALL PROGRAMME

On acceptance of the tender a WORKING or OVERALL PROGRAMME is prepared by the contractor's planning staff together with the plant engineers and the site agent or foreman for the job. This will be used as a guide for:
- site activities
- detailed planning
- purchasing and delivering of materials
- coordination of sub-contractors and main contractors work
- assessing job progress

At this point it is essential to have full information from the architect in the form of
- site survey
- a full set of wirking drawings
- specifications
- bills of quantities and
- a full list of all nominated subcontractors.

The preparation of the overall programme consists broadly of
- breaking the job down into a series of basic operations involving only one trade.
- establishing the quantities of work in each operation and the time content of each in terms of men and machines.
- arranging the operations in a sequence and balancing the size of gangs to give a maximum continuity of work for each trade
- breaking down a large job into phases so that several operations may proceed simultaneously.

The programme is usually expressed in the form of a chart, covering
- all main operations throughout the contract
- the phasing of the work
- the duration of each operation

Together with this chart a written report or schedule has to be prepared including
- the methos to be used
- a schedule of plants
- the labour requirements
- informations regarding site offices, storage huts, equipment, and small tolls.

Besides the overall programme, showing the major operations and phasing of a job, a detailed short - term planning at regular intervals on the site is necessary:
1) a reasonably detailed programme is prepared at mothly intervals, to cover four weeks ahead,
2) a detailed programme is prepared each week. This indicates in detail the materials/labour requirement/ and operational methods to be used.

4.1.3.1 Break down of job

Smaller jobs are commonly divided into the following stages:
1) foundations and walling up to DPC
2) carcase to completion of roofing in
3) finishes and all services
4) drains and site works

In large jobs and multi - storey work the break - down stages can be.
1) sub-structure, or foundation work
2) frame, or basic structure
3) cladding, infilling, weather - proofing etc.
4) drains and site works.

Each stage is planned separately rist.
Compenstion for any variations from the programme arising within the stages can be made by increasing the gang sizes to speed up certain operations or, at times when productivity is greater than that assumed at the planning stage, labour can be put on to isolated jobs which can be carried out at any time without interfering with the sequence of other operations.

4.1.3.2 Quantities of work and time content.

In order to relate the various operations throughout the job a schedule of basic quantities has to be worked out from which the number of MAN HOURS and MACHINE HOURS required to complete the job can be obtained. (so-called LABOUR and PLANT standards.)
These standards in each case are established on the basis of information fed back from
- previous contracts or
- work studies, having regard to the type of labour which will be available and the likely demand on plant.

The work content for each operation is inserted on a schedule of basic operations which can be in the form of a series of DATA SHEETS.
These sheets form a detailed analysis of the complete work and give informations to all planning activities during the course of the contract.

4.1.3.3 Plant and Labour outputs
As soon as the probable availability of resources has been estimated, the outputs of men and machines must be evaluated, so that the times for elements of work can be determined These LABOUR CONSTANTS must be realistic and allowances must be made for rests, bad weather, tea breaks and other interferences with normal output.

An element of work on site is 1,ooom^2 of 1-brick internal walling. If the firm's estimated labour constant for this work is 1.50 men/h/m^2 then the number of men/h required for this work will be:

1,ooom^2 x 1.50 men/h/m^2
= 1,5oo men /h

If 10 bricklayers are available in a gang, the time to be taken will be

$$\frac{1{,}500 \text{ men/h}}{10 \text{ men}}$$
= 150 h

If an 8 hour day is worked on site, this element will take 18 3/4 days to complete.

The following examples are typical of reasonable standard times for various operations, but these should be carefully checked and verified, and, if necessary, adjusted to suit any special conditions before aplying them to actual work on site.

MACHINE EXCAVATION

Machine excavation	cbm/h
Surface excavation not exceeding 300 mm deep $0.375\ m^3$ bucket	11
Surface excavation not exceeding 300 mm deep 0.625 m2 bucket	21
Surface excavation not exceeding 300 mm deep 0.375 m3 bucket	12
Surface excavation not exceeding 300 mm deep 0.625 m3 bucket	24
Excavate foundation trenches not exceeding 1.5 m deep 0.375 m3 bucket	6
Excavate foundation trenches not exceeding 1.5 m deep 0. 625 m3 bucket	12
Excavate basements not exceeding 1.5 m deep 0.375 m3 bucket	9
Excavate basements not exceeding 1.5m deep 0.625 m3 bucket	18
Excavate basements exceeding 1.5 m and not exceeding 3 m 0.375 m3 bucket	7 1/2
Excavate basements exceeding 1.5 m and not exceeding 3 m 0.625 m3 bucket	15
Add for each additional 1.5 m depth	1.25
Excavate spoil from heap and load into barrow	0.5
Wheel 20 m	0.25
Load excavated material into lorries	0.6
Spread and level in layers not exceeding 300 mm thick	0.3
Return fill and ram	0.85
Level and ram bottoms	0.06/m2
Planking and strutting	Hours per square metre
excavations not exceeding 1.5 m deep:	
poling boards and struts	0.075
open boarding	0.2
close boarding	0.4
excavations exceeding 1.5 m and not exceeding 3 m deep:	
open boarding	0.3
close boarding	0.8

HARDCORE FILLING

Hardcore filling	h/cbm
Filling in making up levels	0.5
Concolidated in 150 mm layers	1.0

HAND EXCAVATION

Hand excavation	h/cbm
Surface excavation not exceeding 1.5 m deep	2.0
Add for each additional 1.5 m of depth	0.75
Excavate trenches not exceeding 1.5 m deep	2.5
Add for each additional 1.5 m of depth	1.0
Excavate pits not exceeding 1.5 m deep	3.0

CONCRETE WORK

Concrete work	h/cbm
Mixing	
By hand for small quantities	4 to 6

By machine allow 4 to 5 minutes per batch according to type of mixer

TRANSPORTING

Transporting	h/cbm
By hand in barrows and wheel not exceeding 18 m or raise not exceeding 3 m	1.5
By machine plant and labour to suit required output and placing conditions	

PLACING & COMPACTION

Placing and compaction	h/cbm
Foundations in trenches over 300 mm thick	0.5
Foundations in trenches not exceeding 300 mm thick	0.7
Isolated pier holes	1.0
Beds over 300 mm thick	0.75
Beds over 150 mm thick not exceeding 300 mm thick	1.0
Beds not exceeding 150 mm thick	1.25
Add to the above for working around reinforcement	1.0

SURFACE TREATMENT

Surface treatment	h/square metre
Grading to falls	0.3
Tamping	0.2
Trowelling	0.25

BRICKWORK

Brickwork
(The following outputs are based on the ratio of 2 bricklayers to 1 labourer).

	Men/h per unit
General brickwork in plasticised or gauged mortar 60 bricks	1.0
General brickwork in cement mortar 60 bricks	1.1
General brickwork overhand in gauged mortar 60 bricks	1.1
Walling curved on plan ex 15 m n.e. 22 m rad 60 bricks	1.5
Walling curved on plan ex 7.5 m n.e. 15 m rad 60 bricks	1.66
Walling curved on plan ex 4.5 m n.e. 7.5 m rad 60 bricks	1.75
Walling curved on plan exceeding 3 m rad	
Underpinning 60 bricks	2.00
Rough arches 60 bricks	3.0
Form cavity inc. laying wall ties, and keeping cavity clean per m2	0.25
Rough cutting per m2	0.7
Close cavity per m	0.3
Cut chase for small pipe per m	0.6
Eaves filling per m	0.3
Engineering bricksper 60	1.50

FACE BRICKWORK

Face brickwork	men/h per unit
General facing bricks per m2	1.25
Fair faced walling / m2	1.10
Rake out joints and point on completion per m2	0.75
Fair straight cutting per lin.m.	0.3
Fair raking cutting per lin.m	0.4
Fair curved cutting per lin.m	0.5

ARCHES

Arches	men/h per unit
Soldier arches or brick lintels per m2	3.6
Fair axed arches per m2	5.5
Rubbed and gauged per m2	12.25

COPINGS & SILLS

Copings and sills	men/h per unit
Brick on edge coping including pointing per lin.m	0.4
Two courses of tile creasing per lin. m.	0.6
Brick on edge per lin. m.	0.75

PARTITIONS

Partitions	men/h
Clinker, concrete and hollow clay 50 mm thick per m2	0.5
Clinker, concrete and hollow clay 75 mm thick per m2	0.6
Clinker, concrete and hollow clay 100 mm thick per m2	0.7
Lightweight blocks 50 mm thick per m2	0.4
Lightweight blocks 75 mm thick per m2	0.5
Lightweight blocks 100mm thick per m2	0.6
Bonding to brickwork per lin. m	0.2
Rough cutting at irregular angles and soffits per lin. m.	0.15

	men/h
Air bricks each	0.2
Flue linings per lin. m.	0.6
Set chimney pot and flaunch each	1.0

D.P.C.

Damp-proof courses	men/h
Two courses of slates horizontal per m2	0.9
Two courses of slates vertical per m2	1.35
Bituminous felt per m2	0.3

SUNDRIES

Sundries	men/h
Bed plates and sills per lin. m.	0.1
Bed frame and point one side per lin. m.	0.25
Bed frame and point two sides per lin m	0.35
Rake out joints and point flashings per lin. m.	0.3
Cut groove for asphalt skirting and point per lin.m	0.45
Fix metal windows inclu-ding cut and pin lugs to brickwork not exceeding 0.4 m2 each	0.5
Fix metal windows inclu-ding cut and pin lugs to brickwork not exceeding 0.8 m2 each	0.75
Fix metal windows inclu-ding cut and pin lugs to brickwork not exceeding 1.6 m2 each	1.0
Add for pointing one side per lin. m.	0.08

SCAFFOLDING

Scaffolding	men/h per 100 m2 erect and dismantle
Putlog scaffold up to 6 m high	25
Putlog scaffold 6 to 9 m high	30
Putlog scaffold 9 to 18 m high	35
Putlog scaffold over 18 m high	40

Independent scaffolds add 25 per cent to the above

Drainage	men/h		
Stoneware drain pipes	100 mm	150 mm	225 mm
Lay and joint 600 mm pipes per lin. m.	0.45	0.6	0.75
Lay and joint 900 mm pipes per lin. m.	0.35	0.45	0.6
Extra for bends each	0.1	0.12	0.15
Extra for junctions each	0.2	0.25	0.3
Gulleys each	0.5	0.66	-
Interceptors each	0.66	0.75	-

Concrete drain pipes	225mm	300 mm	375 mm	450 mm
Lay and joint per lin.m.	0.8	0.9	1.1	1.25
Extra for bends each	0.2	0.25	0.3	0.35

Manholes	100 mm	150 mm	225 mm
Channels each	0.2	0.3	0.4
Three-quarter section channels each	0.3	0.5	0.7
Covers and frames bedding and fixing each	0.75		
Step irons each	0.1		

4.1.3.4 Sequence and timing of operations

In each stage into which a job may be divided, there will be one operation or a group of related operations governing the production time of the complete stage. This KEY OPERATION takes the longest time, when the time cycles of all the operations are based on the use of the optimum size of gang for each.

The largest of the key operations in each stage is termed the MASTER OPERATION. The speed of the master operation is governed by:
- the time, in which the work has to be completed
- the size of the gang or
- the amount of labour available(in which case the size of the gang which can be put on it will fix the time required to complete the operation)

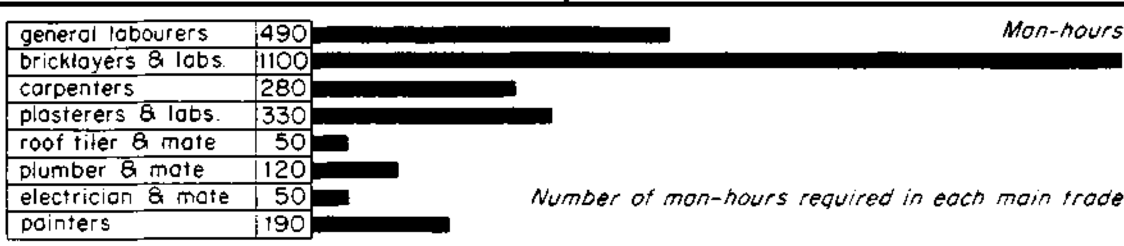

Number of man-hours required in each main trade

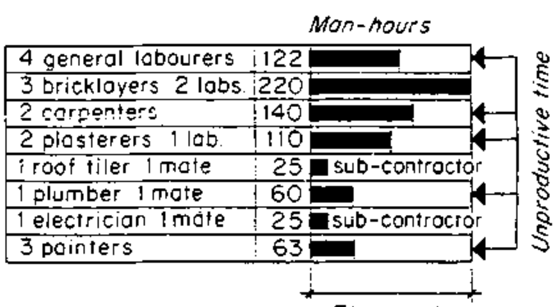

A

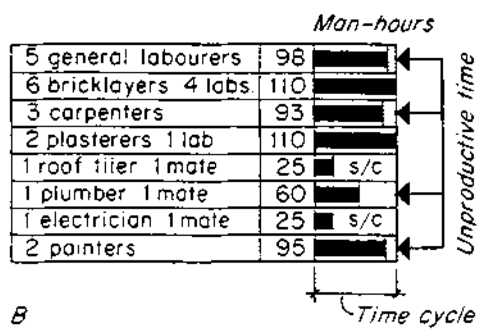

B

It is necessary to bring all other operations into phase with the master operation, in order to ensure continuity of productive work for each trade or gang and to minimize unproductive time.

The time cycles of the operations in each stage are brought into phase by adjusting the size of the gangs, so that the working time of each gang is (as far as possible) the same as that of the key operation. Figure illustrates the effect of the balancing of trade gangs.

4.1.3.5 The programme chart

The final step is to prepare a working schedule an the basis of the balanced production in each stage, from which programmes for the various stages are drawn up.
The stage programmes are combined to give the final overall programme.
(A short intervall may be left between the stages to provide for delays due to bad weather or other causes).
A typical overall programme chart is shown in fig.
In addition to the data sheets and the overall programme, a SCHEDULE of CONTRACT INFORMATION is prepared giving
- the recommended labour force for each stage of the contract under trades
- details regarding the sequence of operations given on the data sheets
- details of equipment and methods of construction to be used.
- full details concerning all sub contractors

A site layout plan and a site preparation programme will also be prepared at this stage as well as the detailed programme for the first four week period of the contract.
(ref. to 'site organisation')

OVERALL PROGRAMME

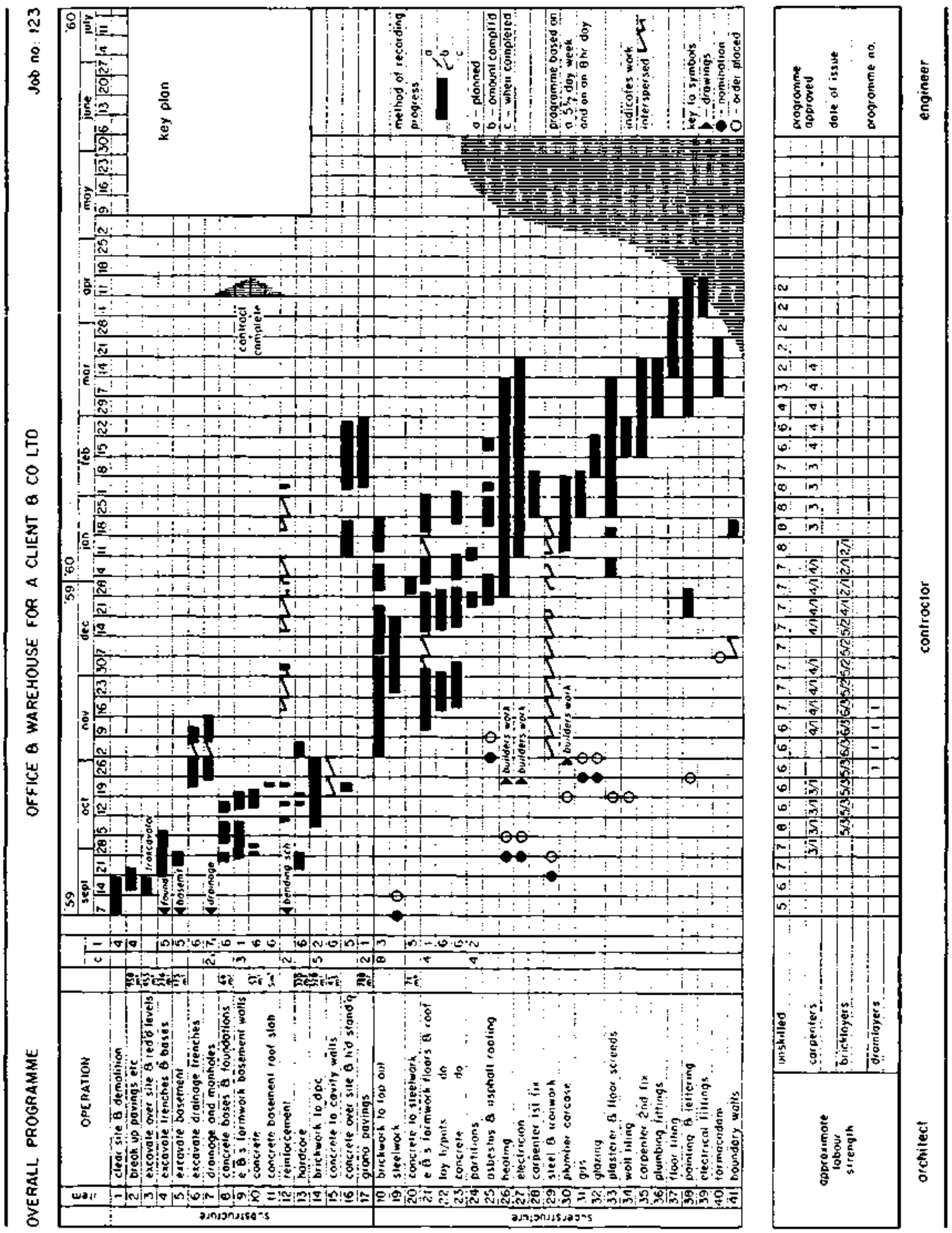

MONTHLY PERIOD PROGRAMME

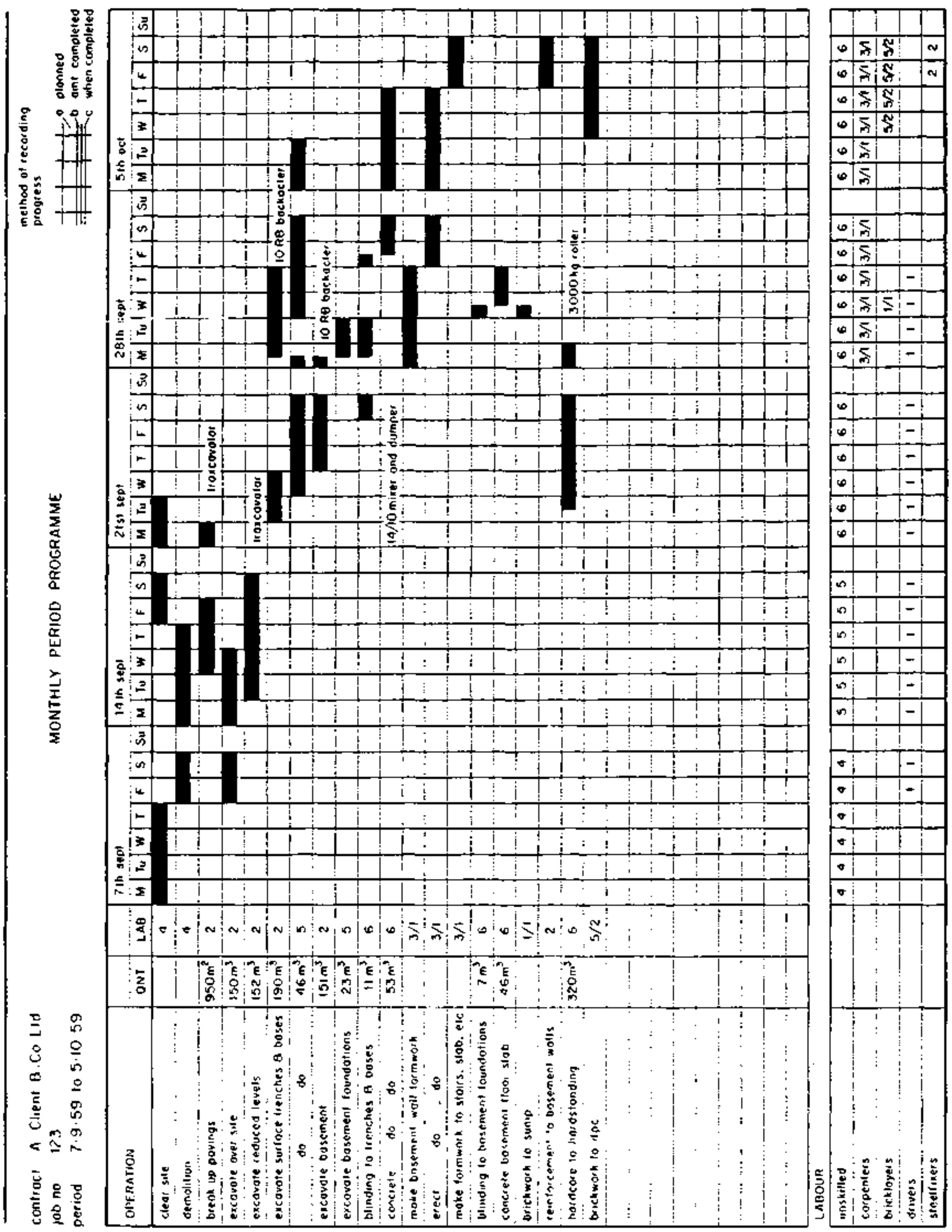

4.1.4. PLANNING CONSIDERATIONS

4.1.4 PLANNING CONSIDERATIONS
A number of factors which have a bearing on the decisions made during the contract planning stage are briefly considered here.

4.1.4.1 Site conditions and access
Site conditions will limit the type of plant that may be used:
- on wet sites it will be necessary to use tracked machines in the case of excavators and mobile cranes, and dempers for transport
- sloping sites may make the use of rail mounted cranes unsuitable or uneconomical.
- on confined sites there may be insufficient room for a mixer or mixing plant and it may be necessary to use truck mixed concrete.
- Limitations of access may fix the maximum size of plant which can be brought on the site.

4.1.4.2 Nature of job
The type of structure, the general form, size and detailing of the building will all have an effect upon the way in which the contract is planned.
The contractor has to consider the nature of the structure in relation to the site so that he can decide where best to place his equipment and materials. All plant should be so placed on the site that the structure can be erected without moving the plant until most of it is completed. Plant should also be so placed that it can be removed easyly at the completion of the job.
In some circumstances the contractor may request the adjustment of the structure in some way, in order to permit the most efficient planning of the contract. It may be desirable to enlarge a lift shaft slightly in order that a climbing crane may be accomodated within it.
OR : For certain parts designed originally as in situ cast work to be carried out as precast work in order fully to utilize a crane on the job etc.

4.1.4.3 Plant
The choice of the most suitable plant for any particular operation necessiates a consideration of the capabilities, limitations, and outputs of different types of plant.

- EXCAVATION can be carried out either mechanically by a number of different types of plant or by hand.
  The SPOIL can be transported in various types of vehicle and the length of haul to tip will vary with the job, so that many combinations of excavator and transporting machines are posibble.

The method adopted for excavating operations will depend upon
a) the type of excavation to be carried out
b) the nature of the soil to be excavated
c) the volume of soil to be excavated
d) the length of haul to tip and the terrain over which the machinery has to dig and travel
e) the type of plant available for the contractor

For small quantities, handexcavation is cheaper than mechanical excavation and the type of transport will depend on the distance to be hauled, the nature of the ground to be traversed and the cost of temporary roads, where necessary.

- HANDLING of structural units and materials in fabrication and erection can be carried out by crane or forklift truck.
  If a crane is used the work must be planned round the crane. Consideration must be given to the quantity and nature of materials to be handled and whether or not there is sufficient to keep a crane fully accupied throughout the working day.

  The careful timing of materials as near as possible to the point at which they will be used, together with the correct siting of hoisting plant, materials dumps and mixing plant in relation to the building and to each other is an important factor in planning for high productivity and for the reduction of double-handling.

- MIXING Type and size of concrete mixer are dictated to a large extent by the quality and quantity of concrete required.
  When small to medium quantities (say up to 20 m3/day)are required a mixer together with hand loading of the aggregate skip, some form of weight batching and hand barrow delivery can be economical.
  When steady outputs of not less than 30m3 per day are required, complete mechanisation (with a mechanical scoop ar gravity loading of the mixer skip, gravity fed bulk cement and - for delivery - a crane carrying a full batch skip or, alternatively, a pneumatic concrete placer) is best.

- CONTRACTORS MECHANICAL PLANT
  In its widest sense 'contractors plant' implies the machinery, tools and other equipment used in the contractor's yard and workshop, and on the site.
  The machines and power tools are divided into three classes according to their degree of mobility:
  - fixed (operating from a fixed position on site)
  - portable (being moved about by pulling, pushing or carrying by hand)
  - mobile (moving from one place to another under their own power)

  They may further be devided into classes according to their function.
  The following figures show a collection of mechanical plant and power tools used on the building site only.

EXCAVATING

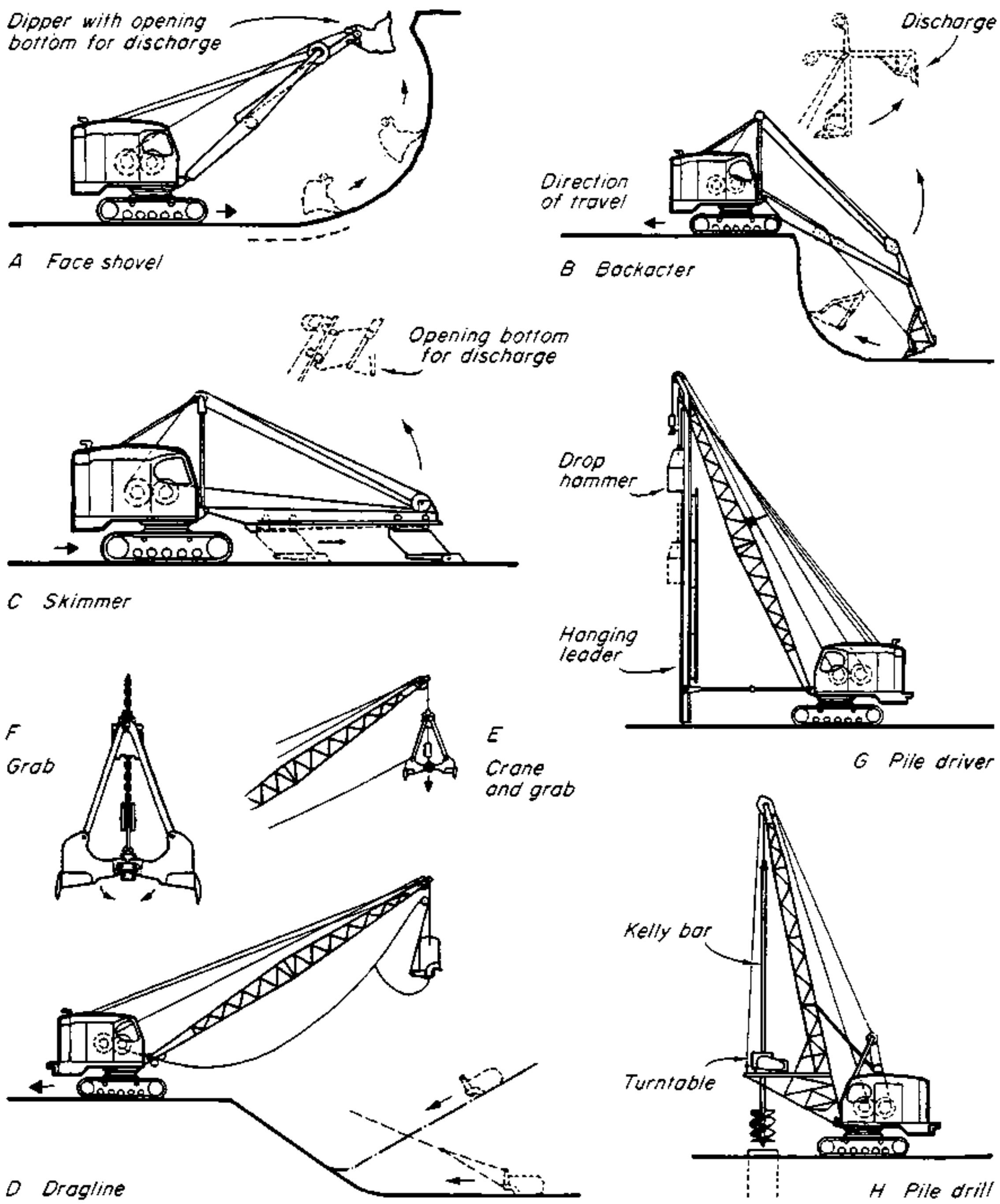

Excavator equipment

EXCAVATING

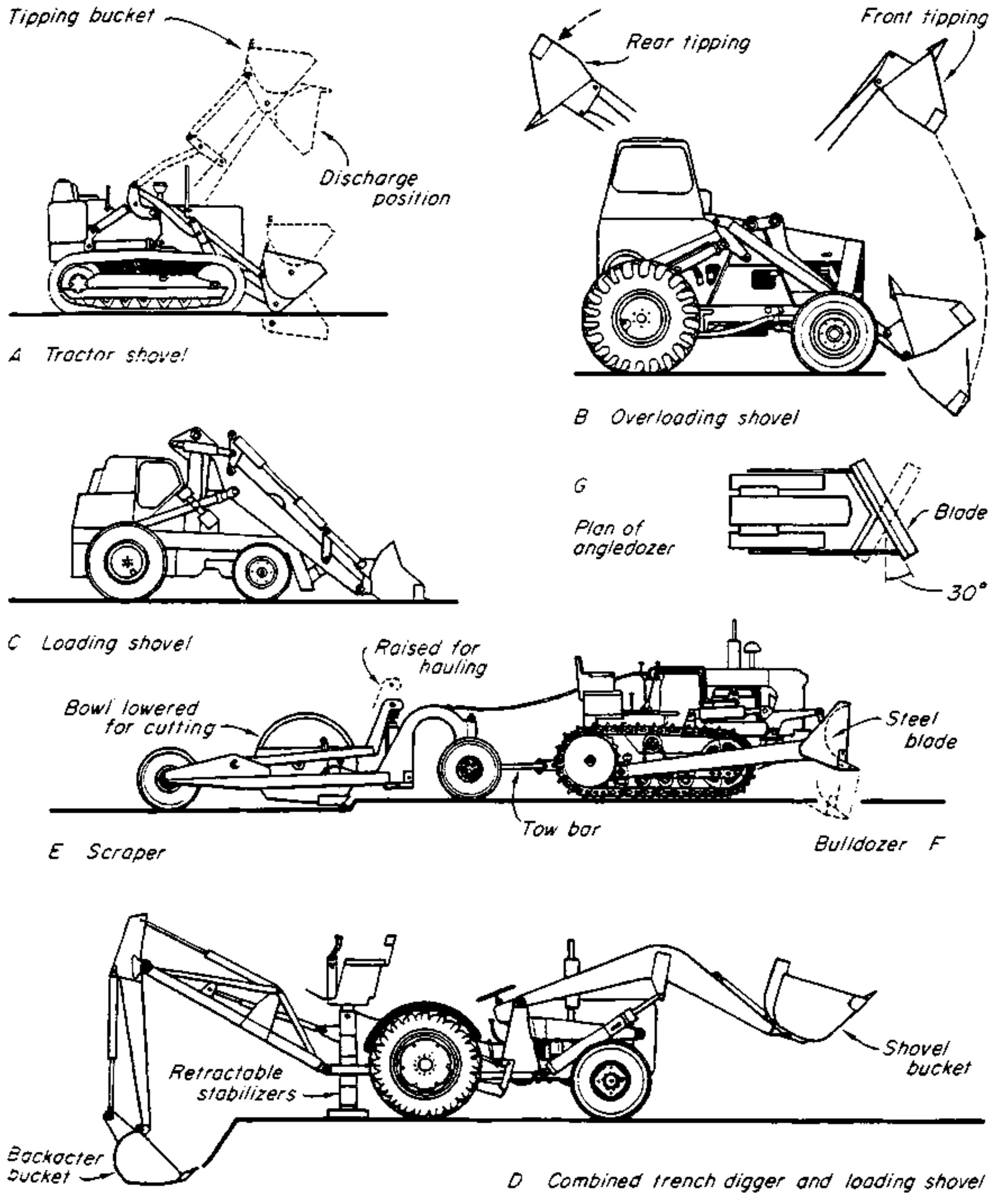

Tractor based equipment

CRANES

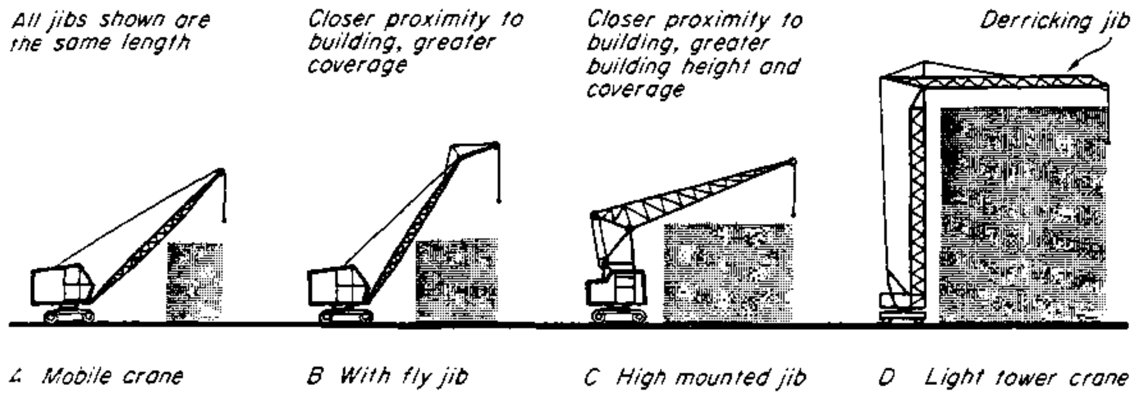

Cranes – relative amount of working areas and coverage

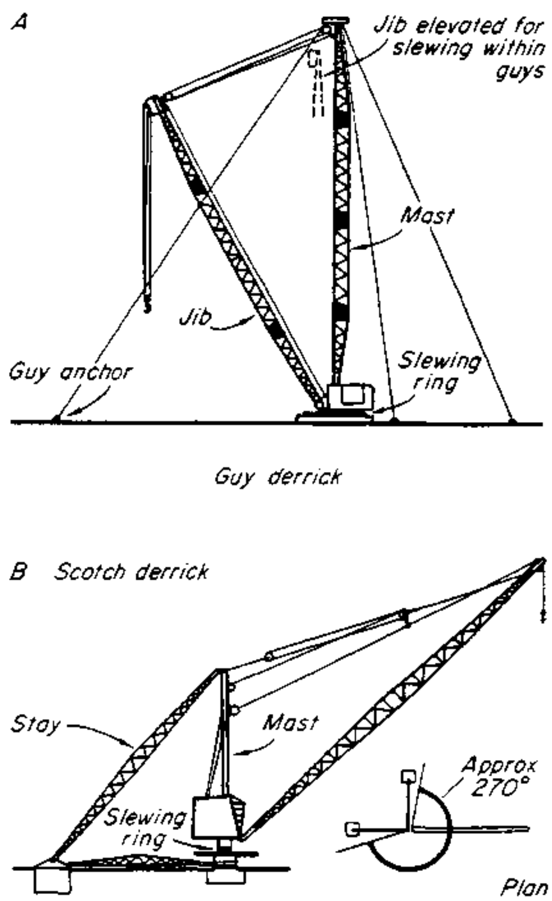

Derrick cranes

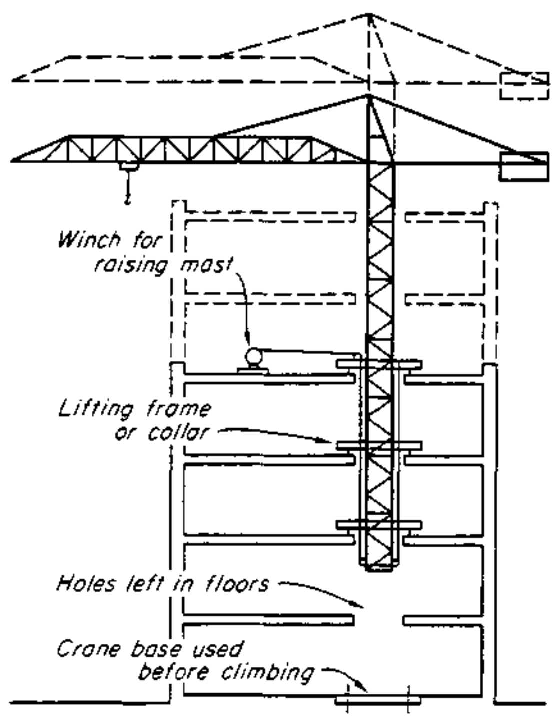

Climbing crane

CRANES

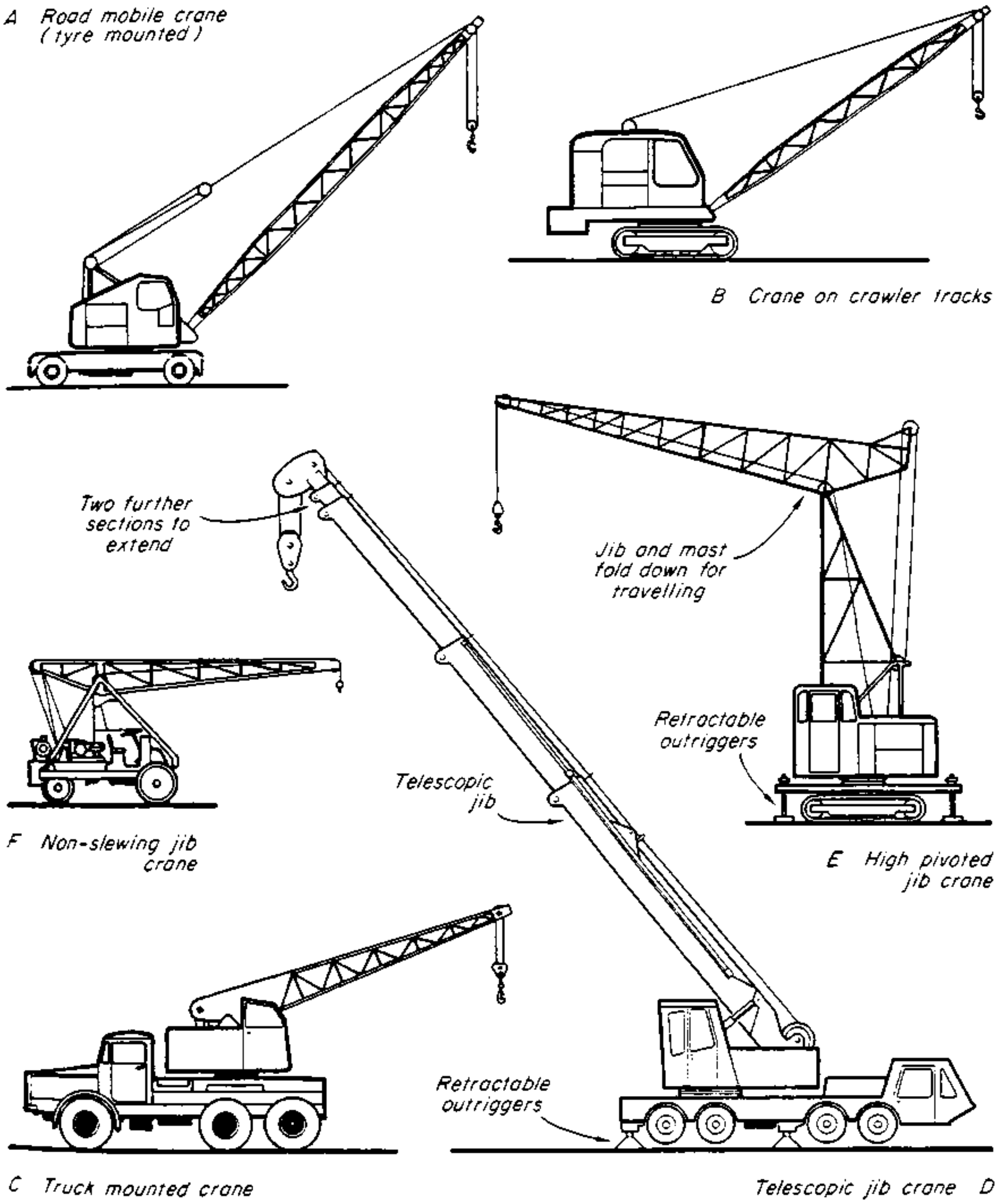

Mobile cranes

CRANES

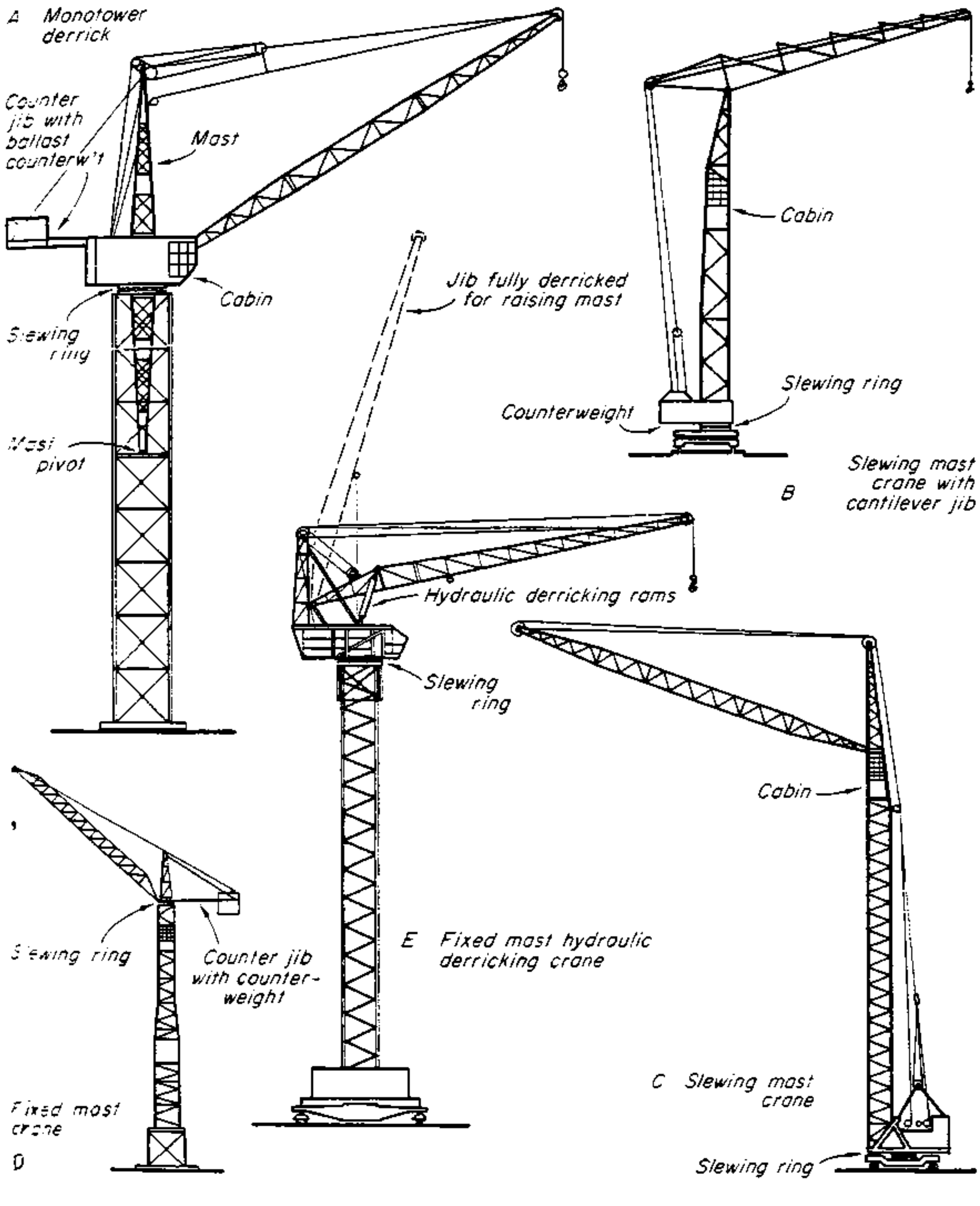

Derricking jib tower cranes

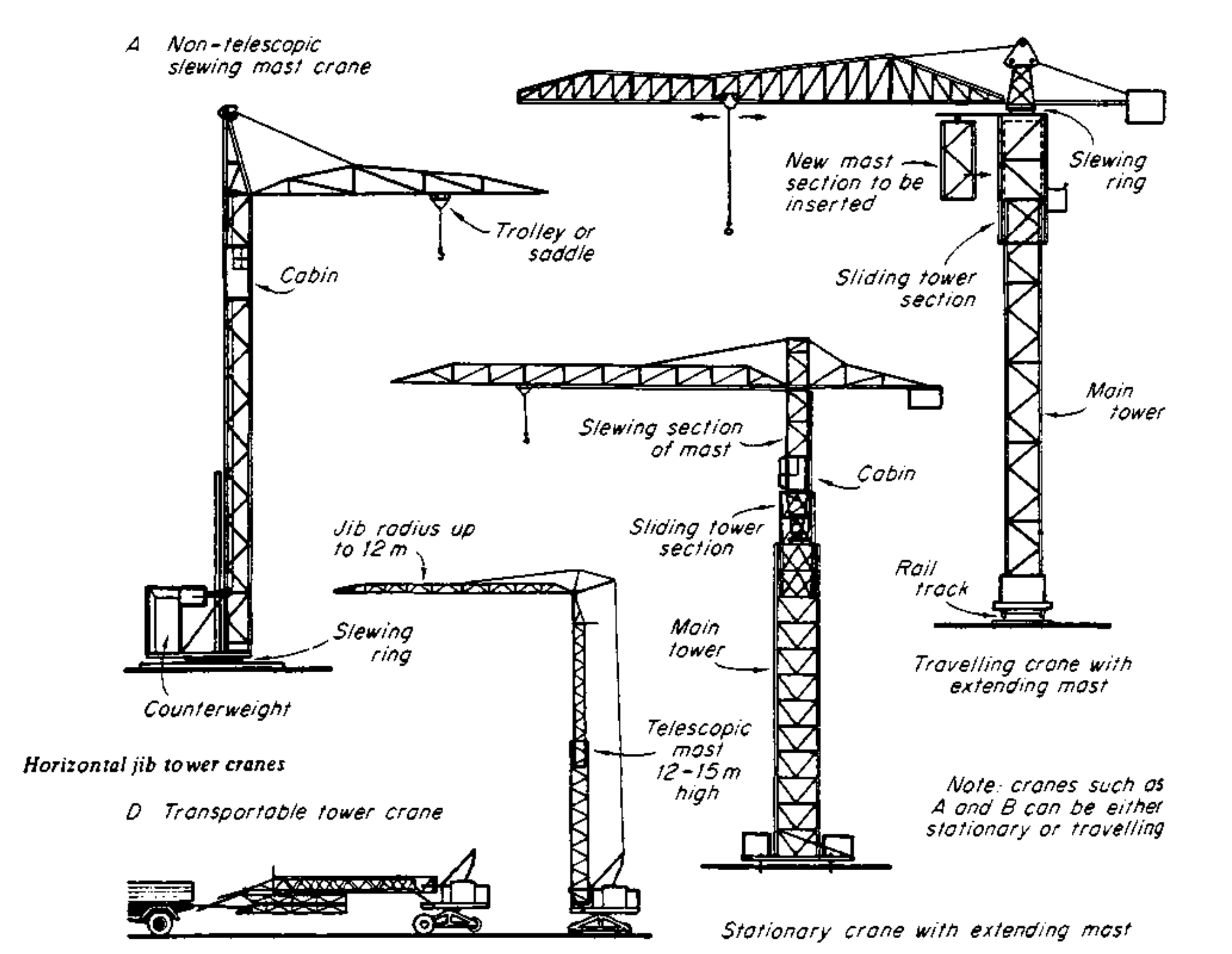

Horizontal jib tower cranes

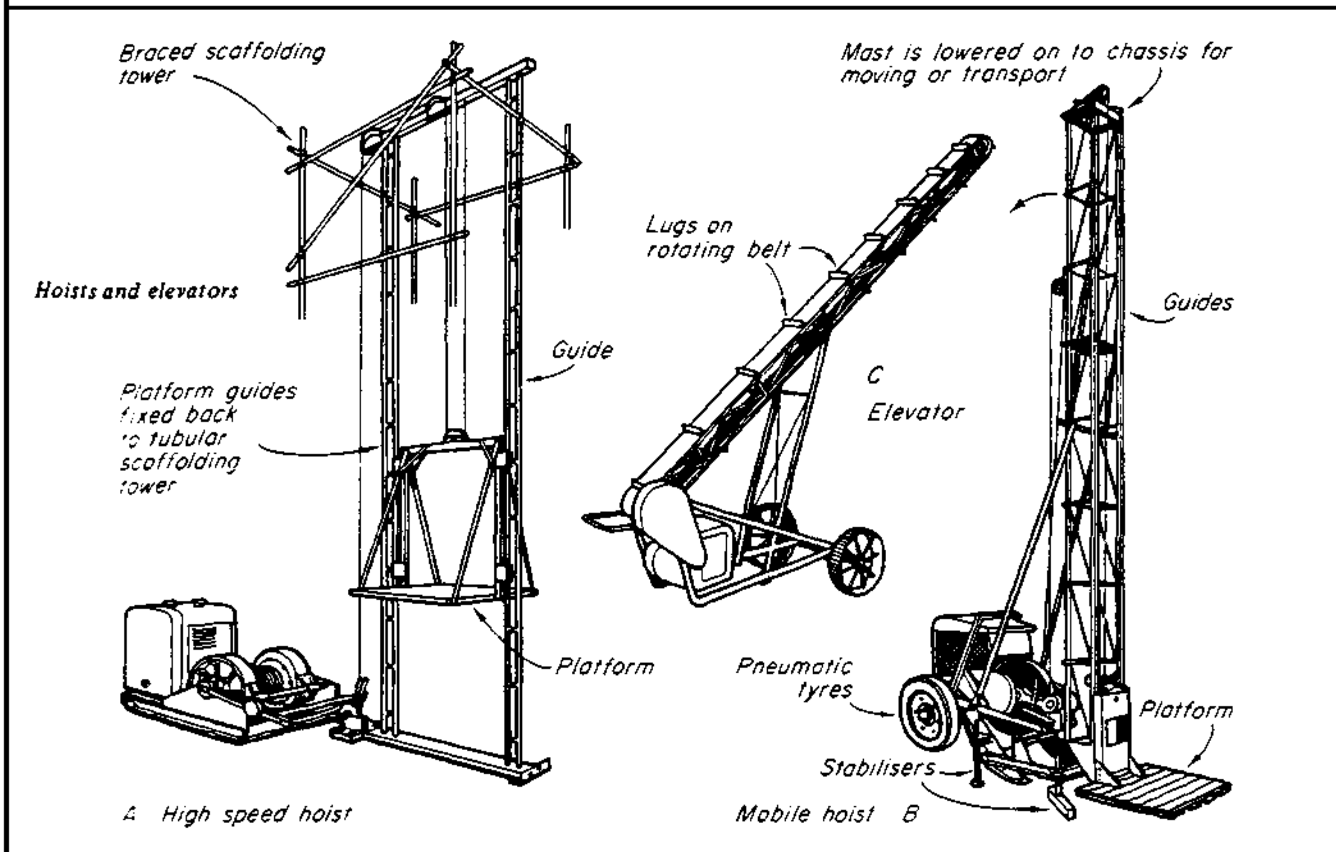

Hoists and elevators

4. CONTR. PLANNING	CONTRACT PLANNING	BUILDING CONSTR.
compiled: D. VOLKE		LECTURE
MAY '83		CET 2031/14.129
TCA TECHNICAL COLLEGE ARUSHA CHUO CHA UFUNDI ARUSHA	CIVIL ENGINEER. DEPARTMENT	29

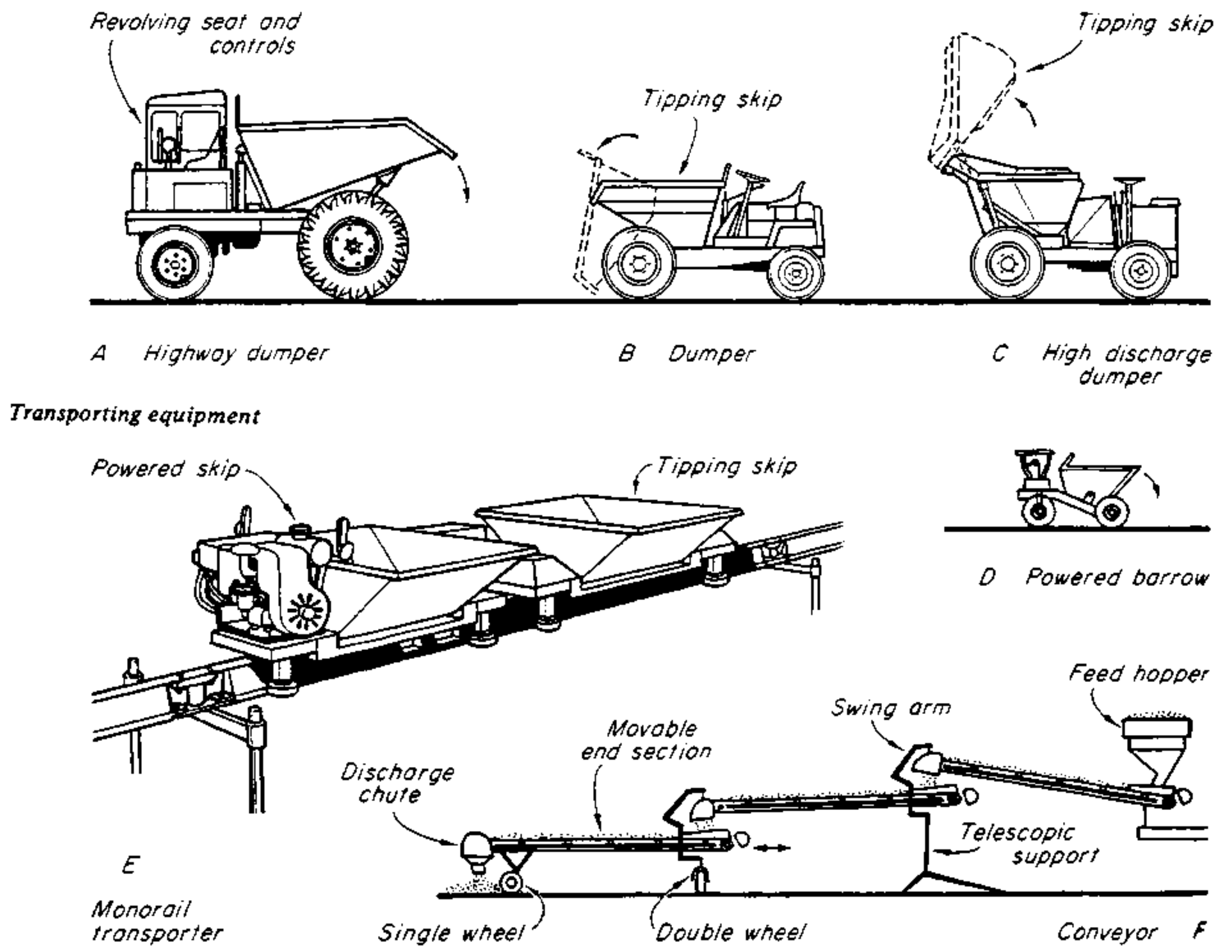

Transporting equipment

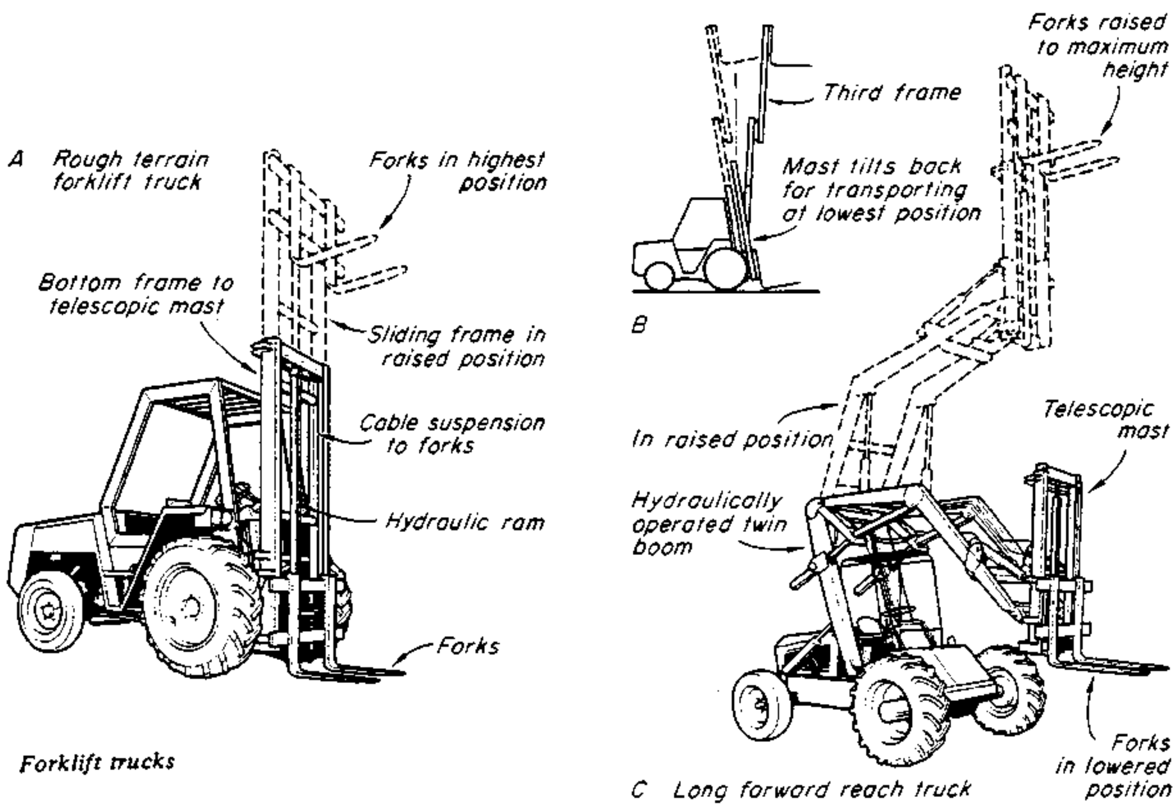

Forklift trucks

CONCRETE MIXERS

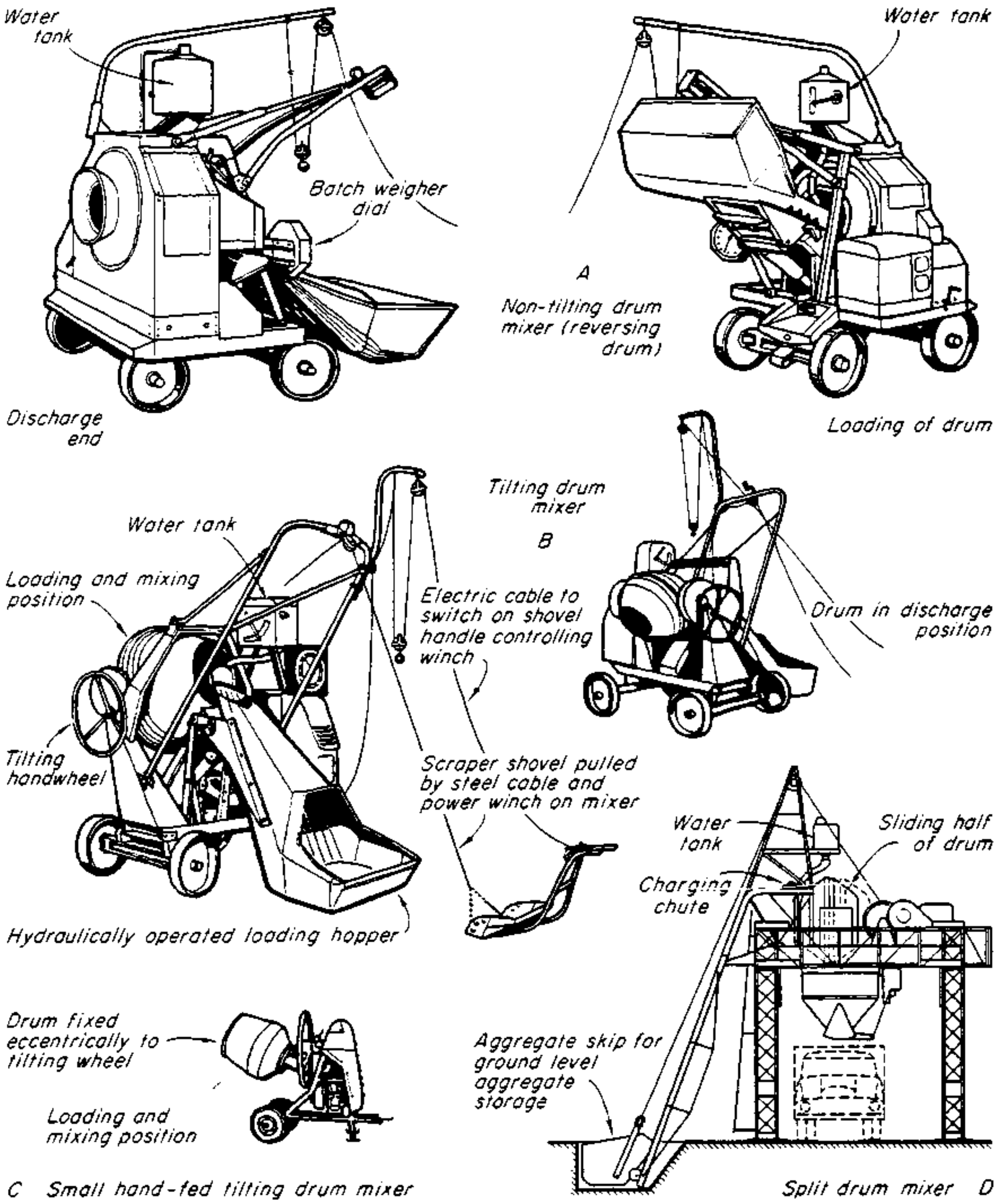

Concrete mixers

4. CONTR. PLANNING	CONTRACT PLANNING	BUILDING CONSTR.
compiled : D. VOLKE		—— LECTURE ——
MAY '83		CET 2031/14.131

TCA	TECHNICAL COLLEGE ARUSHA CHUO CHA UFUNDI ARUSHA	CIVIL ENGINEER. DEPARTMENT	

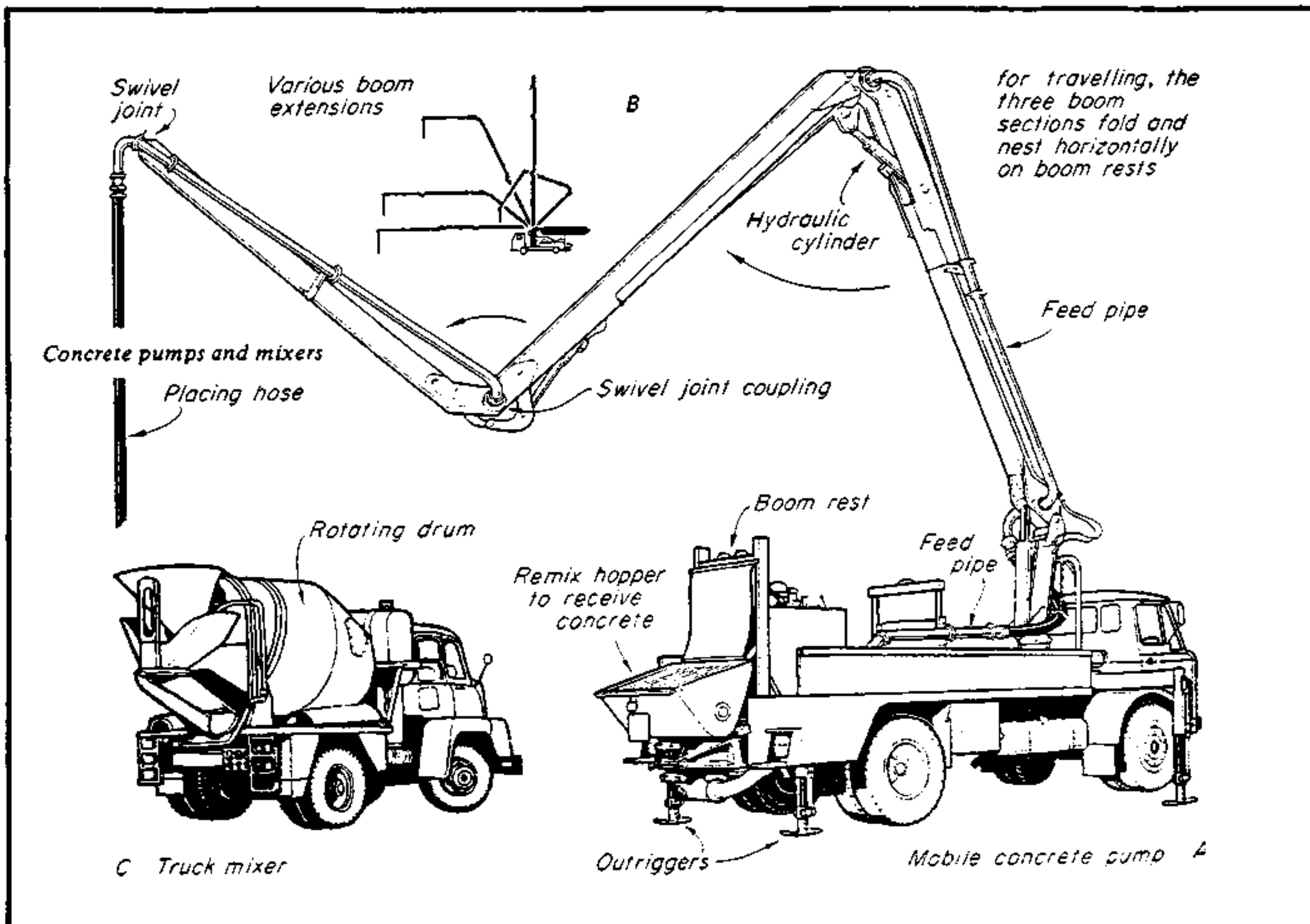

Concrete pumps and mixers

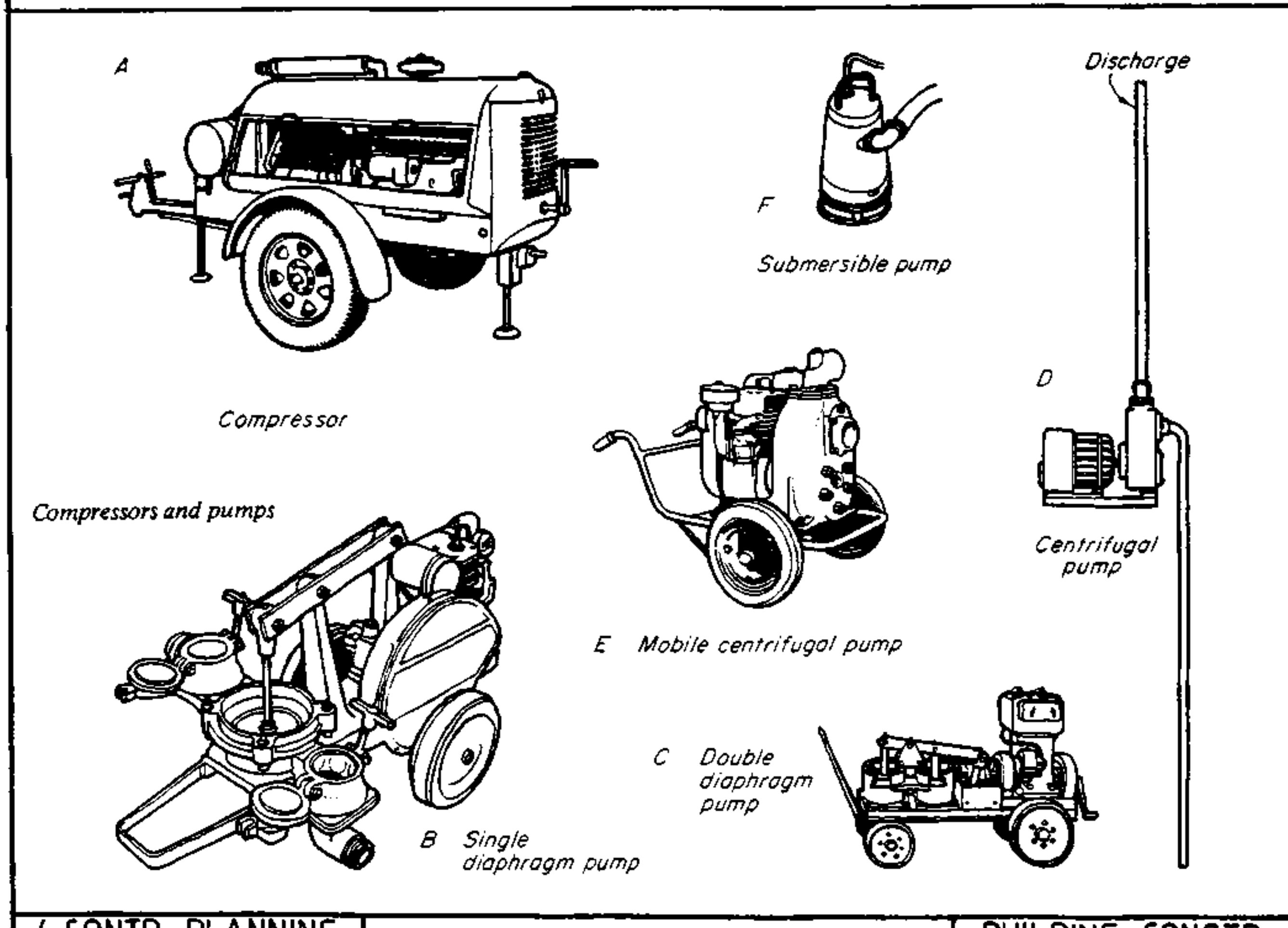

Compressors and pumps

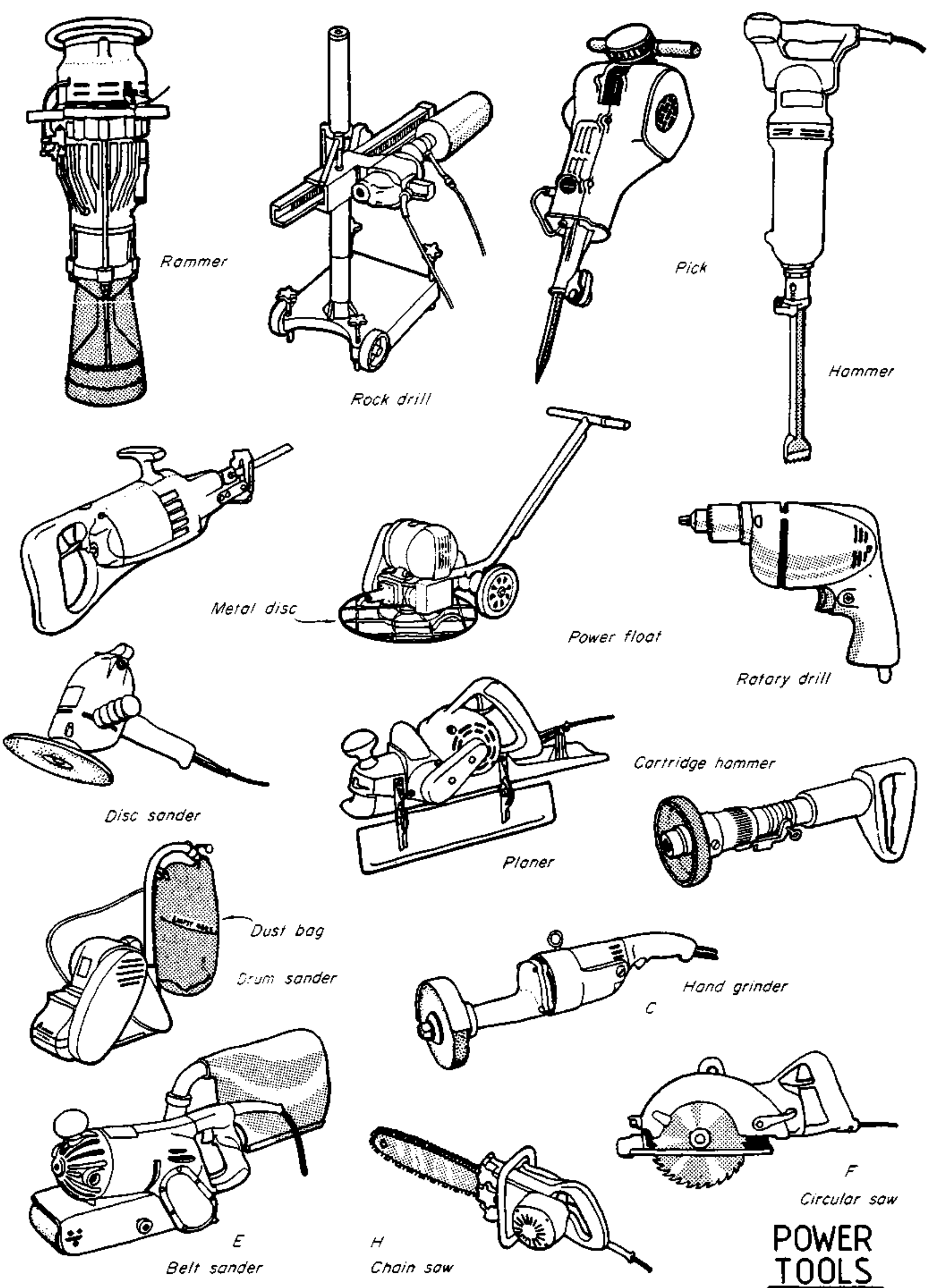

POWER TOOLS

4.CONTR. PLANNING compiled : D.VOLKE MAY '83	CONTRACT PLANNING	BUILDING CONSTR. LECTURE CET 2031/ 14.133
TCA TECHNICAL COLLEGE ARUSHA CHUO CHA UFUNDI ARUSHA	CIVIL ENGINEER DEPARTMENT	33

SCAFFOLDING

4.1.4.4 SCAFFOLDING
A scaffold is a temporary structure from which persons cangain access to a place of work in order to carry out building operations, it includes any working platforms, ladders and guard rails. Baically there are two forms of scaffolding:
1) Putlog scaffolds.
2) Independent scaffolds.

PUTLOG SCAFFOLDS This form of scaffolding consists of a single row of uprights or standards set a-way from the wall at a distance which will accommodate the required width of the working platform. The standards are joined together with horizontal members called ledgers and are tied to the building with cross members called putlogs. The scaffold is erected as the building rises and is mostly used for buildings of traditional brick construction (see Fig.).

INDEPENDENT SCAFFOLDS An independet scaffold has two rows of standards which are tied by cross members called transoms. This form of scaffold does not rely upon the building for support and is therefore suitable for use in conjunction with framed structures (see Fig.).
Every scaffold should be securely tied to the building at intervals of approximately 3.600 m vertically and 6.000 m horizontally. This can be achieved by using a horizontal tube called a bridle bearing on the inside of the wall and across a window opening with cross members connected to it (see Fig.); alternatively a tube with a reveal pin in the opening can provide a connection point for the cross members (see Fig.). If suitable openings are not available then the scaffold should be strutted from the ground using raking tubes inclined towards the building.

MATERIALS Scaffolding can be of:
1) Tubular steel
2) Tubular aluminium alloy
3) Timber

Typical tubular steel putlog scaffold

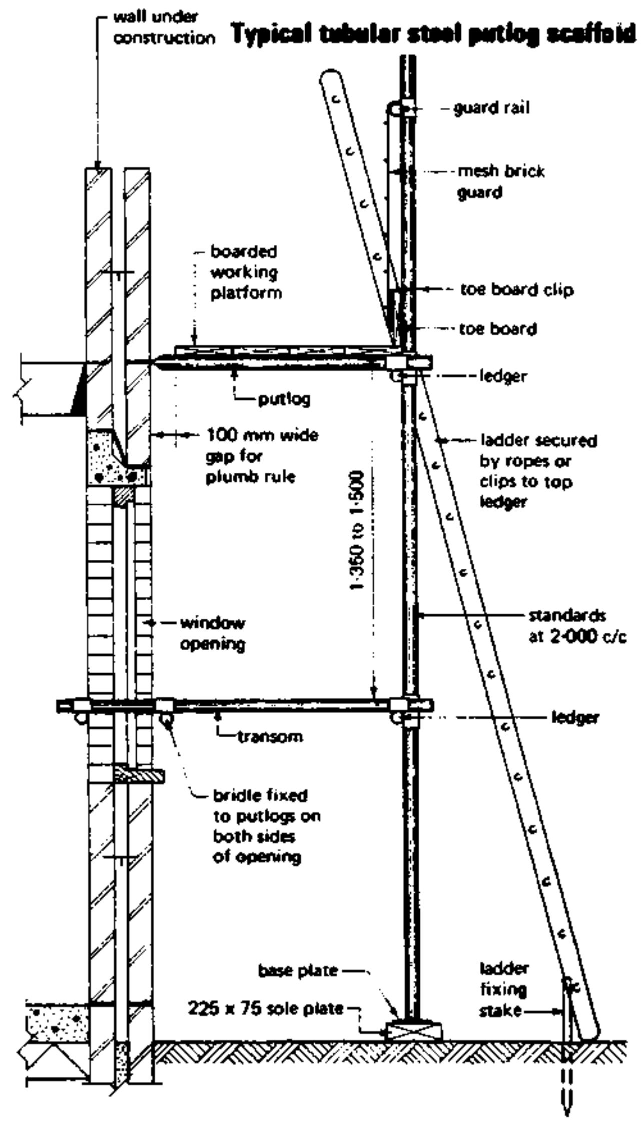

Scaffolds and Construction Regulations

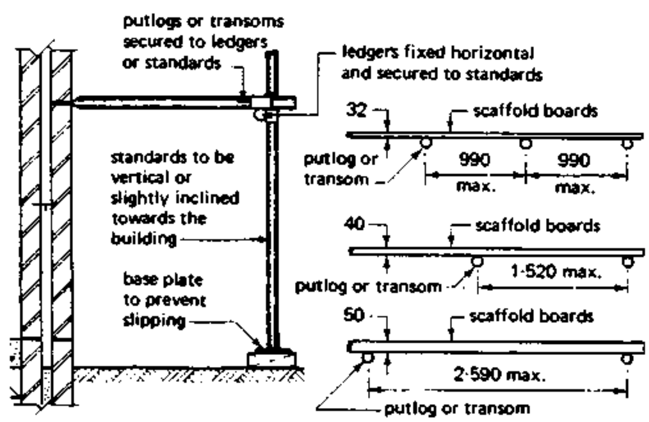

Regulation 13 ~ Standards, putlogs and transoms

TUBULAR STEEL British Standard 1139 gives recommendations for both welded and seamless steel tubes of 48mm outside diameter with a nominal 38 mm bore diameter. Steel tubes can be obtained galvanised (to guard against corrosion); ungalvanised tubes will require special care such as painting, varnishing or an oil bath after use. Steel tubes are nearly three times heavier than comparable aluminium alloy tubes but are far stronger and since their deflection is approximately one third of aluminium alloy tubes, longer spans can be used.

ALUMINIUM ALLOY Seamless tubes of aluminium alloy with a 48 mm outside diameter are specified in BS 1139 for metal scaffolding. No protective treatment is required unless they are to be used in contact with materials such as damp lime, wet cement and sea water, which can cause corrosion of the aluminium alloy tubes. A suitable protective treatment would be to coat the tubes with bitumastic paint before use.

TIMBER The use of timber as a temporary structure in the form of a scaffold is now rarely encountered in this country, although it is still used extensively in other countries. The timber used is fir of structural quality in either putlog or independent format, the members being lashed together with wire or rope instead of the coupling fittings used with metal scaffolds.

SCAFFOLD BOARDS These are usually boards of softwood timber complying with the recommendations of BS 2482 used to form the working platform at the required level. They should be formed out of specified softwoods of 225 x 38 section and not exceeding 4.800 m in length. To prevent the ends from splitting they should be end bound with not less than 25 mm wide x 0.9 mm galvanised hoop iron extending at least 150 mm along each edge and fixed with a minimum of two fixings to each end. The strength of the boards should be such that they can support a uniformity distributed load of 6.7 kN/M2 when supported at 1.2oom centres.

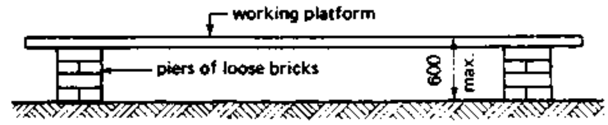

Regulation 15 ~ Stability of scaffolds

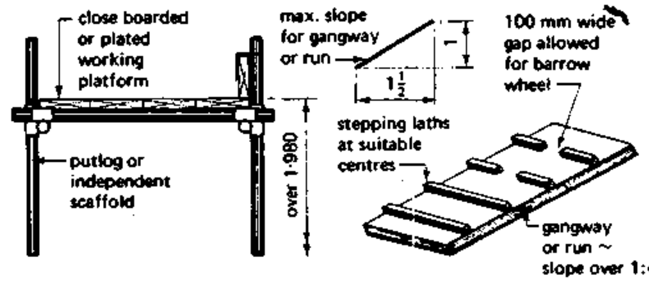

Regulation 24 ~ Platforms, gangways and runs

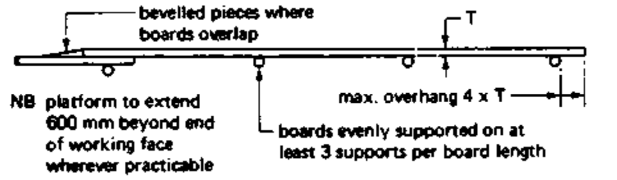

Regulation 25 ~ Boards in working platforms

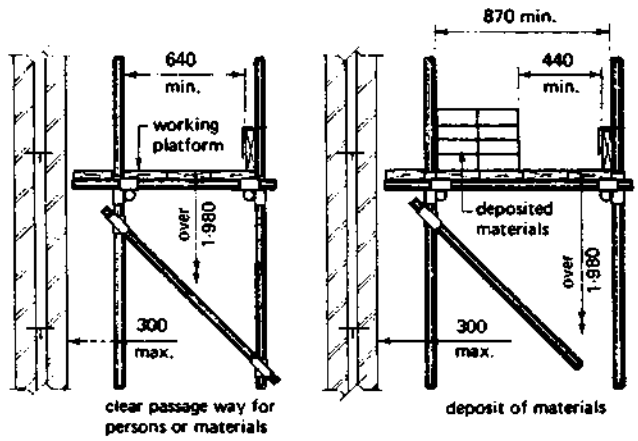

Regulation 26 ~ Widths of working platforms for putlog and independent scaffolds

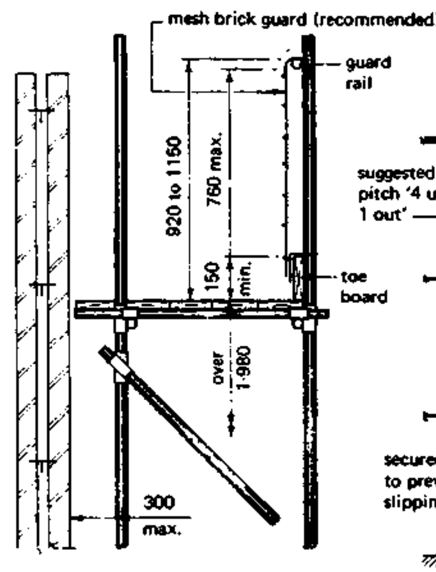

Regulation 28 ~ Guard rails and toe boards for putlog and independent scaffolds

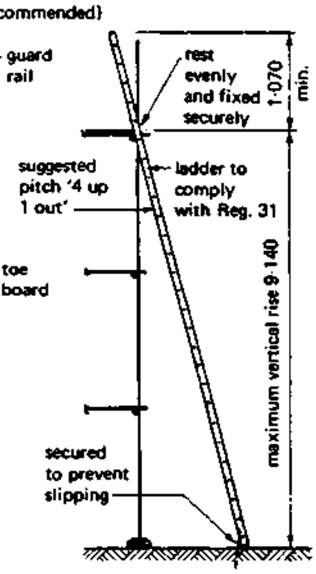

Regulation 32 ~ Use of ladders

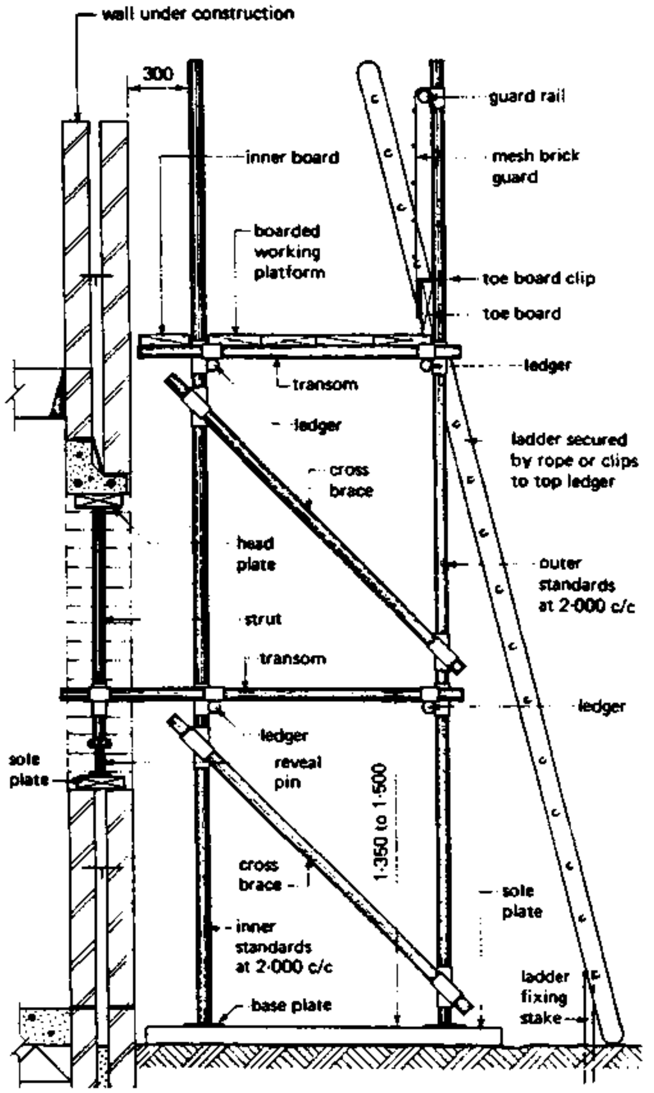

SCAFFOLD FITTINGS Fittings of either steel or aluminium alloy are covered by the same British Standard as quoted above for the tubes. They can usually be used in conjunction with either tubular metal unless specified differently by the manufacturer. The major fittings used in metal scaffolding are:

Double coupler: the only real load bearing fitting used in scaffolding and is used to join ledgers to standards.

Swivel coupler: composed of two single couplers riveted together so that it is possible to rotate them and use them for connecting two scaffold tubes at any angle.

Putlog coupler: used solely for fixing putlogs or transoms to the horizontal ledgers.

Base plate: a square plate with a central locating spigot used to distribute the load from the foot of a standard on to a sole plate or firm ground. Base plates can also be obtained with a threaded spigot and nut for use on sloping sites to make up variations in levels.

Split joint pin: a connection fitting used to joint scaffold tubes and to end. A centre bolt expands the two segments which grip on the bore of the tubes.

Reveal pin: fits into the end of a tube to form an adjustable strut.

Putlog end: a flat plate which fits on the end of a scaffold tube to convert it into a putlog.

Typical examples of the above fittings are shown in the Fig.

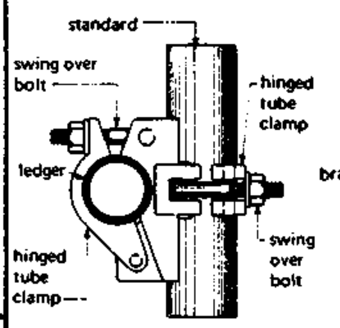

Double coupler

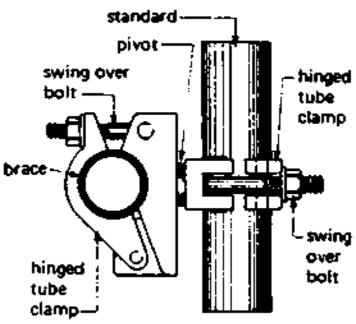

Swivel coupler

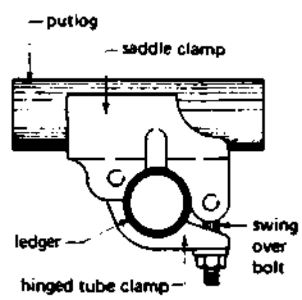

Putlog clip

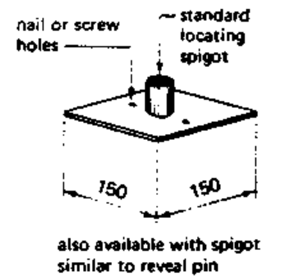

Base plate

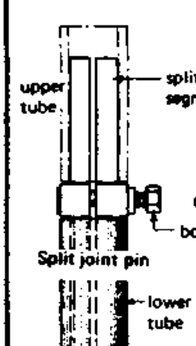

Split joint pin

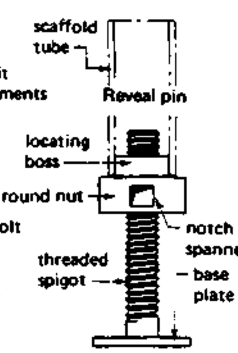

Reveal pin

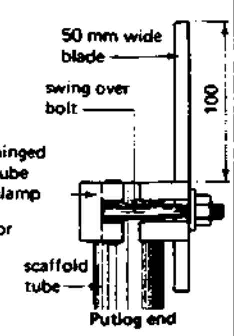

Putlog end

TRUSS-OUT SCAFFOLD
MOBILE TOWER SCAFFOLD

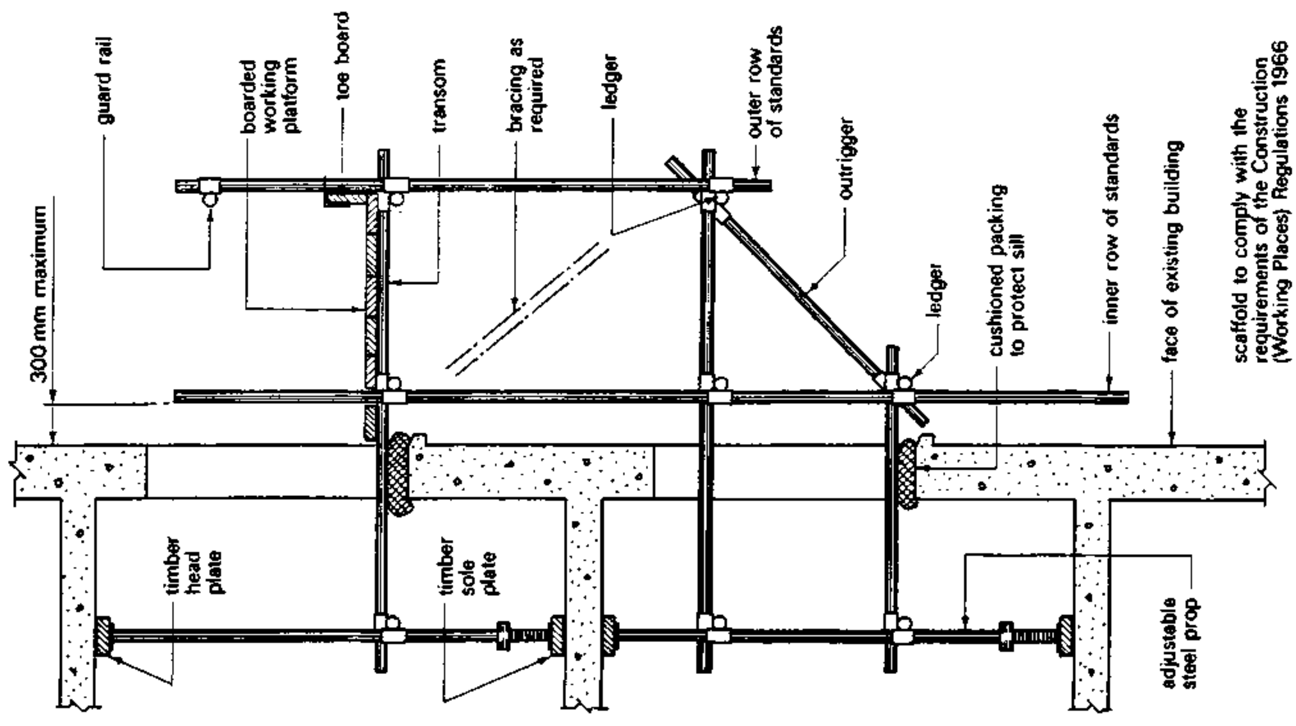

Typical truss-out scaffold details

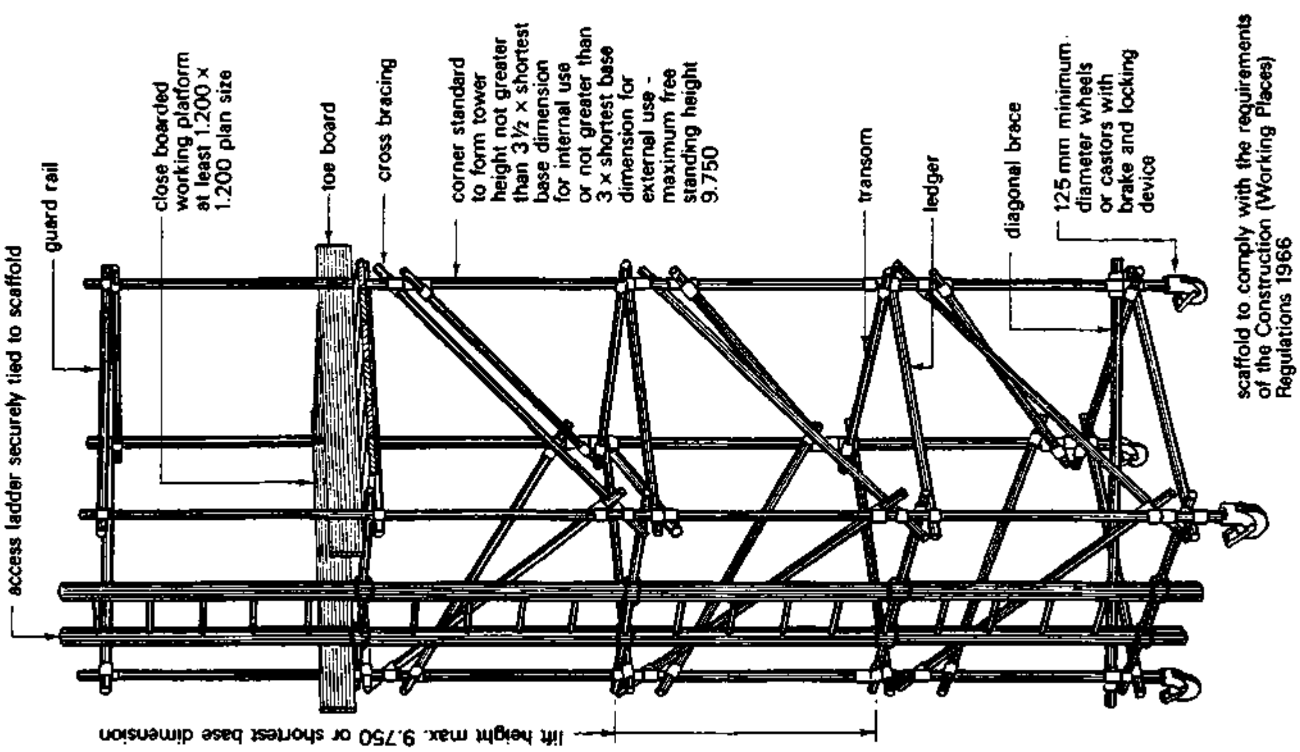

Typical mobile tower scaffold

4. CONTR. PLANNING compiled : D. VOLKE MAY '83	CONTRACT PLANNING	BUILDING CONSTR. LECTURE CET 2031/14.1 37
TCA TECHNICAL COLLEGE ARUSHA CHUO CHA UFUNDI ARUSHA	CIVIL ENGINEER DEPARTMENT	37

4.2 SITE ORGANIZATION

4.2 SITE ORGANIZATION

4.2.1 Preliminary work

Before site work begins, a PERMISSION to erect a building has to be obtained from the local Authorities. For the procedure of application as well as for the contents of all necessary documents to be submitted refer to 'ARCHITECTURAL DRAWING, Vol II'

The general foreman should visit the site at the earliest opportunity to note such details as:
rainfall / humidity / prevailing wind / orientation / contours.
These factors will influence the site layout plan as far as drainage, shade storage of materials, etc. are concerned.

The following items will also require his attention:
- Adjacent buildings
- Ground surface
- Soil
- Site surround
- Access road
- Water supply
- Electric power
- Transport
- Existing services, etc.

4.2.2 SITE PLANNING
A PROGRAMME covering operations during the first four weeks will have been drawn up at planning stage, in the preparation of which, where possible, the general foreman will have assisted, so that he is in agreement with the proposals lad down.
This programme will be generally in two parts:
a) Site preparation programme, which will cover the demolishing of any existing buildings the setting out of the site and marking out of starage areas, the erection of huts and the construction of temporary access roads where necessary
b) Period 1 programme, on the lines of that shown in the fig., which will cover work during the first four weeks or so of the contract.

Together with these will be provided site layout plans to show a) traffic routes, on which will be indicated any areas requiring particular attention, such as levelling-off or covering with temporary Summerfield track, and any direction signs required; b) the location of offices, huts and stores; c) the position of bulk storage areas both during and after excavation together with the location of any equipment.
The general foreman will in addition also be provided with copies of the:
- overall programme
- schedule of contract information
- data sheets

as well as all other necessary documents such as
- bills of quantities
- specifi cation
- set of contract drawings
- details of all material orders placed and to be placed at various dates during the contract
- details of the type and quantity of equipment to be used and the approximate periods when they will be required on the site.

4.2.2.1 PERIOD PLANNING

Work on the site will commence on the basis of the first monthly programme and during the third week of this period, and all subsequent stages, the next monthly programme will be prepared on the basis of the overall plan and data sheets. In the preparation of the monthly plan consideration must be given to the labour force desirable and practicable in the circumstances at the time, to plant requirements and availability, to the phasing and overlapping of operations to ensure completion of the work in the minimum time and to the planning of labour to maintain group identities. Steps must be taken to give adequate warning to all su-contractors when they will be reauired on site.

4.2.2.2 WEEKLY PLANNING

Towards the end of each week progress will be reviewed and the next week's planned progress confirmed or modified if necessary. The following week's planned labour requirements will be reviewed and an stimate made of materials required for the next week but one and of any action required to be taken regarding equipment. This weekly review will be prepared by the general foreman in consultation with his trade foremen and any sub-contractors' foremen, and a written report will be submitted to the contractor,s planning department.

In certain cases where close integration of fully mechanized operations is required over a short period, particularly in the case of reinforced concrete structures, a weekly programme would be drawn up in chart form by the planning department. Such a chart is illustrated in the Fig. In addition to weekly planning, the general foreman will hold a brief meeting each day with his trade foremen and sub-contractor foremen to review the next day's work and to make the necessary preparations in regard to the placing of materials and equipment in readiness for the next day's operations.

The general foreman will, at the beginning of the job whenever possible, indicate to the local employment office his anticipated 'build up'of labour force during the course of the contract.

4.2.2.3 PROGRESS CONTROL

Good site planning is a prior necessity to smooth and effective progress in construction work, but a regular review of the progress of all perations and its comparison with the programme or plan is essential.
Progress is maintained by the foreman, or on larger jobs by a progress engineer, by the proper organization of the delivery and placing of materials, by ensuring that all equipment and plant is in its correct position at the right time, and by adjusting the size of labour gangs when progress is likely to fall behind the programme because of unforeseen circumstances.
Progress is checked during weekly planning by estimating or measuring the work completed, the percentage of each operation or group of operations completed being established and compared with the programme.
Progress is marked on the charts as indicated in the fugure. When progress varies appreciably from the overall programme and where for this and any other reason it is considered desirable to alter the planned sequence of operations, the general foreman would consult the planning department beforemaking such changes.

Close co-operation between the site staff and the planning department is often maintained by means of regular and formal site production meetings between the general foreman and the planning engineer responsible for the job.

When considering any changes, the effect on the supply of materials must be borne in mind, and when progress is faster than planned, the supply of materials in time for the work becomes the predominating factor. All subcontractors must be notified immediately of any changes in the planned programme of work.

The general foreman should maintain a record of current and planned labour strength in the form of a schedule or chart on which the following week's planned labour requirements will be entered during weekly planning. In addition, all incoming material will be recorded on a form, one for each main item, which should show amongst other information dates of order and receipt, quantity delivered ant the balance of material outstanding.

As an aid to progress control on a job of any size, regular site meetings should be held at which should be present
- the contract manager
- site agent or general foreman
- architect
- clerk of works
- quantity surveyor and
- any subcontractors (when necessary)

At these meetings all aspects of the job requiring attention are discussed and decisions for future action made.

4.2.3 SITE LAYOUT

The layout of every site may be divided into an administrative area and a construction area. In the former will be located stores, offices, subcontractors'huts and canteen and similar accommodation if this is provided, and in the latter, which will be the actual site of the buildings being constructed, will be located consumable stores adjacent to the various buildings and all equipment required for construction purposes.

Proper access and departure routes for lorries should be provided and these should be clearly signposted. In determining the traffic routes attention must be paid to the position of all main services, such as water, gas and electricity, and to drains and excavations. Temporary roads must be positioned with sufficient distance between them and future buildings to allow for the movement or positioning of all mechanical plant.

The administrative area should be located to give quick access to that area of the site which will require maximum labour controll and the main storage area, sub-contractors' huts and canteen, should be so located that accessibility for unloading materials is good and so that they are a minimum distance from the construction areas. The site office should be sited on the route into the administrative area and with as good a view as possible of the construction areas.
All contracts of bigger size require adequate telephone facilities for communication, electricity for power, and lighting facilities for office huts.

The stores area should be situated near the site office and will consist of covered huts for valuable or non-weatherproof stores, such as paint and iron-mongery, and a locked pen for larger valuable stores which are weatherproof, such as metal window frames and pipes. Areas for sub-contractors'stores will be located near the sub-contractors'huts and sometimes they will be situated within the main stores area.

The construction area should contain the minimum practical quantities of materials and of necessary equipment and these should be so positioned that handling and movement is kept to a minimum. As the position of equipment, particularly mixers, hoists and cranes, will influence the position of materials such as sand, aggregates and bricks, the position of all plant should be planned before that of the materials.
Materials arrive on the site in the order decided at planning stage, or in accordance with instructions issued from the site, and sufficient area must be provided to accommodate the size of batch ordered. In addition, overflow areas should be allocated. In planning the layout of the site, consideration must be given to the excavation stages as these may seriously restrict proposed storage areas.
Standardized materials, such as bricks, tiles and drainpipes, should be stacked in unit dumps, the numbers in which remain constant although the length, breadth and height may be varied to suit site conditions.

PERIOD PLANNING

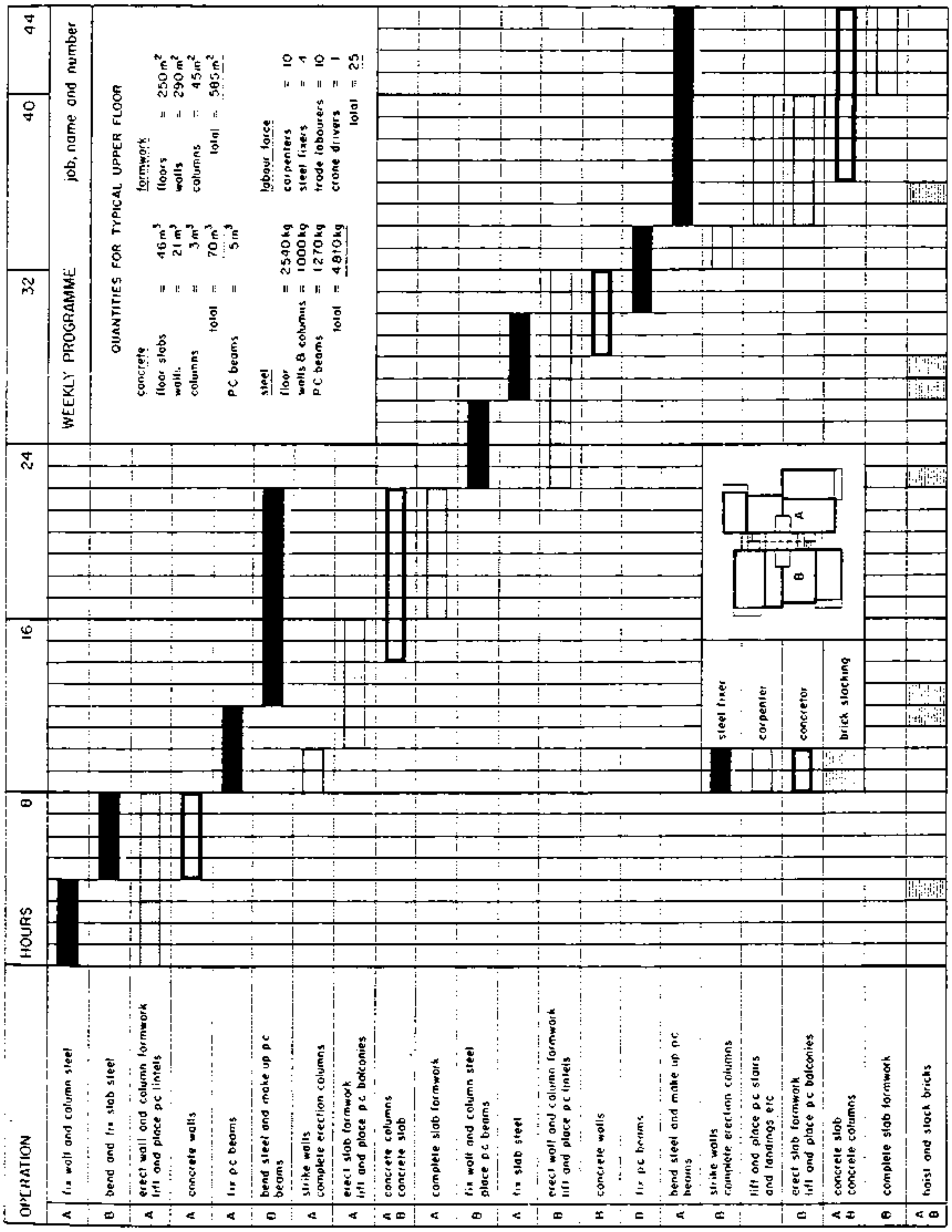

•REPETITION•• exercises ••REPETITION•

Try to answer the following questions and use sketches for illustration

1. CONTRACT PLANNING

- Which considerations should be taken into account in 'Contract Planning';

- Explain the function of a 'Bar Chart'

- What is the difference between analysing a production problem by 'Network' and by a 'Linear Method';

- Describe step by step the way how to prepare a 'Network'in the form of an ARROW DIAGRAM

- Explain the terms:
  - Earliest starting time
  - Latest starting time
  - latest finishing time
  - Floating time
  - Critical path
  - Time /cost optimisation
  - Resource levelling and control

- Who prepares the OVERALL PROGRAMME and where will it be used for;

- Where does the OVERALL PROGRAMME consist of, and in which form is it usually expressed;

- Explain and write notes on the following headings:
  - Break down of job
  - Quantities of work and time content
  - Plant and Labour outputs
  - Sequence and timing of operations
  - Programme chart

- List and describe factors which have a bearing on the decisions made during the contract planning stage.

- Write notes on contractors mechanical plant

- Explain different types of SCAFFOLD refering to their form as well as to the materials and fittings used for construction.

2. SITE ORGANIZATION

- What has to be obtained before site work begins ?

- List items which should require the attention of the general foreman during his first site visit

- What is the contents of the 'site planning programme' ?

- What are the two areas of the 'site layout' ? Write notes and explain the requirements of these areas.

5.FOUNDATIONS

CONTENTS:

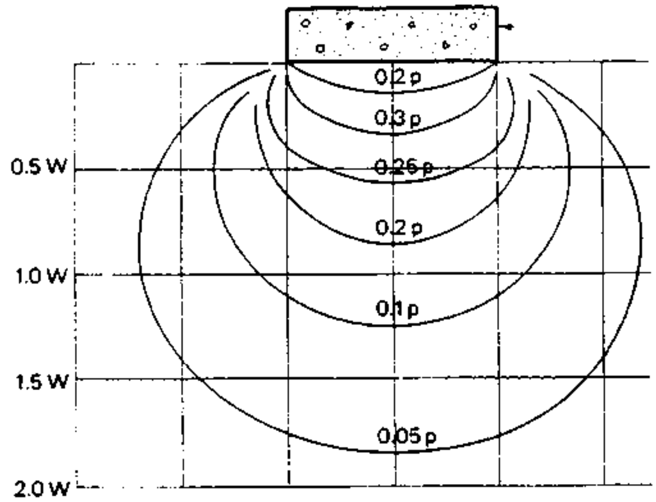

Pressure bulb for shear stress

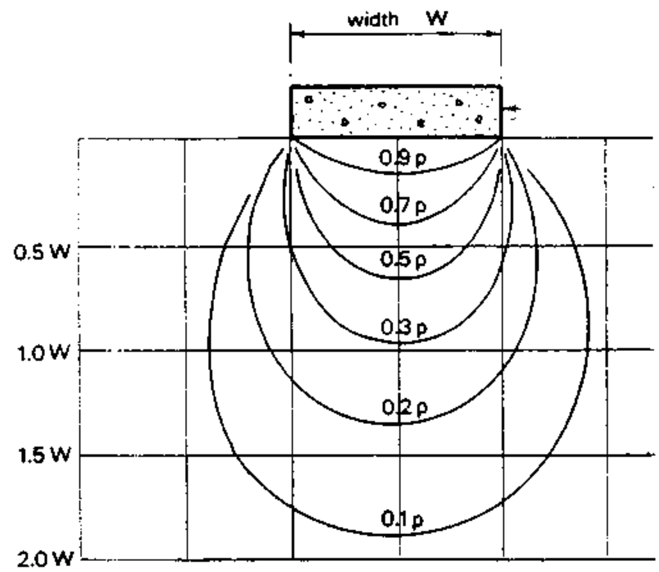

Pressure bulb for vertical stress

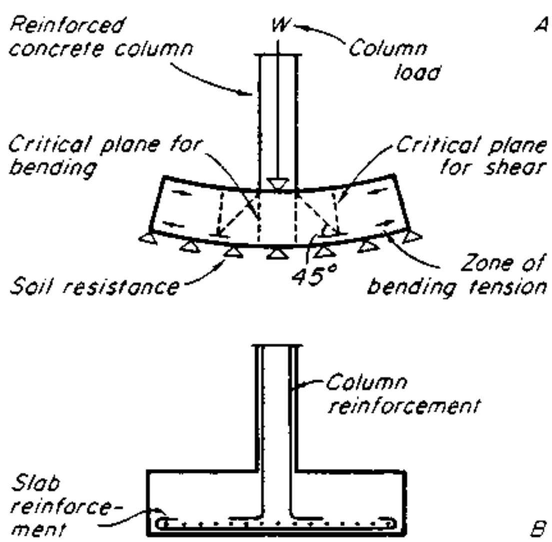

Pad or slab foundation

REFERENCES:

1. Jack Stroud Foster
   MITCHELL'S BUILDING CONSTRUCTION
   " Structure and Fabric "
   Part 1 + 2

2. R. Chudley
   "Construction technology "
   Volume 1,3,4

3. R. L. Fullerton
   "Bu ilding Construction in
   warm climates"
   Volume 1,3

4. W. G. Nash
   "Brickwork 2"

5.FOUNDATIONS

5. FOUNDATIONS

A FOUNDATION is the BASE on which a building rests and its purpose is to safely transfer the load of a building to a suitable subsoil.

Apart from solid rocks all soils are compressible in varying degrees, so that under the building load foundations will - to some extent - move in a downward direction. This is known as SETTLEMENT and is due mainly to the consolidation of the soil particles.

Excessive settlement will result from overloading the soil to such an extent that the loaded area of soil SHEARS past the surrounding soil in what is known as PLASTIC FAILURE of the soil.

In addition, settlement may be caused by a reduction in the MOISTURE CONTENT of certail soils which shring on drying out or by a general movement of the earth due to various causes.

Provided the settlement is UNIFORM over the whole area of the building and is not excessive, the movement does little damage.
If the amount of settlement VARIES at different points under the building (known as realtive or differential settlement) distortion of the structure will occure which, if too great, may result in damages or possible failure of the structure.

Such differential movements must be kept within limits which avoid harmful distortion. These limits will vary with the type of structure and its ability safely to withstand differential movements.

5.1.1 Site exploration

Tall, wide-span or heavily loaded buildings exert greater pressures on the soil resulting in greater settlements, and lead to greater possibility of shear failure of the soil than do small-scale buildings. To overcome this, types of foundations may be required which affect the soil and to considerable depths. In such cases the various soil characteristics take on greater significance and a closer considaration of the soil and its properties is required than is often necessary for small-scale buildings.

This may require an extensive examination of the subsoils involving boring to considerable depths and carrying out field and laboratory tests on the soils.

An extensive investigation of the soil is not usually necessary in the case of small-scale buildings on soils of adequate strength, where (by means of simple stripe or pad foundations near the surface) the pressure on the soil can be kept well within the known SAFE BEARING CAPACITY of a particular soil type. What is required is a simple method of establishing the TYP OF SOIL to a sufficient depth and a means of determining its bearing capacity.

The bearing capacity can be found from standard tables and the soil type can be established by exposing the soil to view for the shallow depths by digging holes- known as TRIAL HOLES (or PITS) - and using simple visual and tactile means of identification.

5.1.1.1 Trial holes

- Should not be further apart than about 30 m and not less than one per 900 m2 of site.
- Should be large enough to accomodate a man (say 1.20 m x 1.00 m or larger if timpering is required.
- Depth: Usually up to 3.oo m, it rarely exceeds 6.oo m.
- The soil should be inspected at all levels as soon as possible after excavation.
- As a check on the possible existance of a very weak layer of soil below the trial hole, a probe of about 1 m may be made by means of a hand anger. This can also be used when the presence of ground water makes the completion of the trial hole difficult.
- The soils excavated and exposed in the trial holes can be identified within broad types by simple field tests.
- Foundations are invariably formed in concrete. The durability can be affected by sulphate salts in the soil, particularly in the ground water.
  The nature of any groundwater should be checked and where sulphate salts are known to be present precautions must be taken (e.g. by use of suitable cement).
- A trial hole also gives to the contractor valuable informations affecting labour costs (ease of excavation) and amount of timbering, underground water (pumping, dewatering).
- Excavations should not be carried out too close to the proposed foundations, they may be a source of weakness, and the should be filled and consolidated ofertwards.

SOIL BORING METHODS

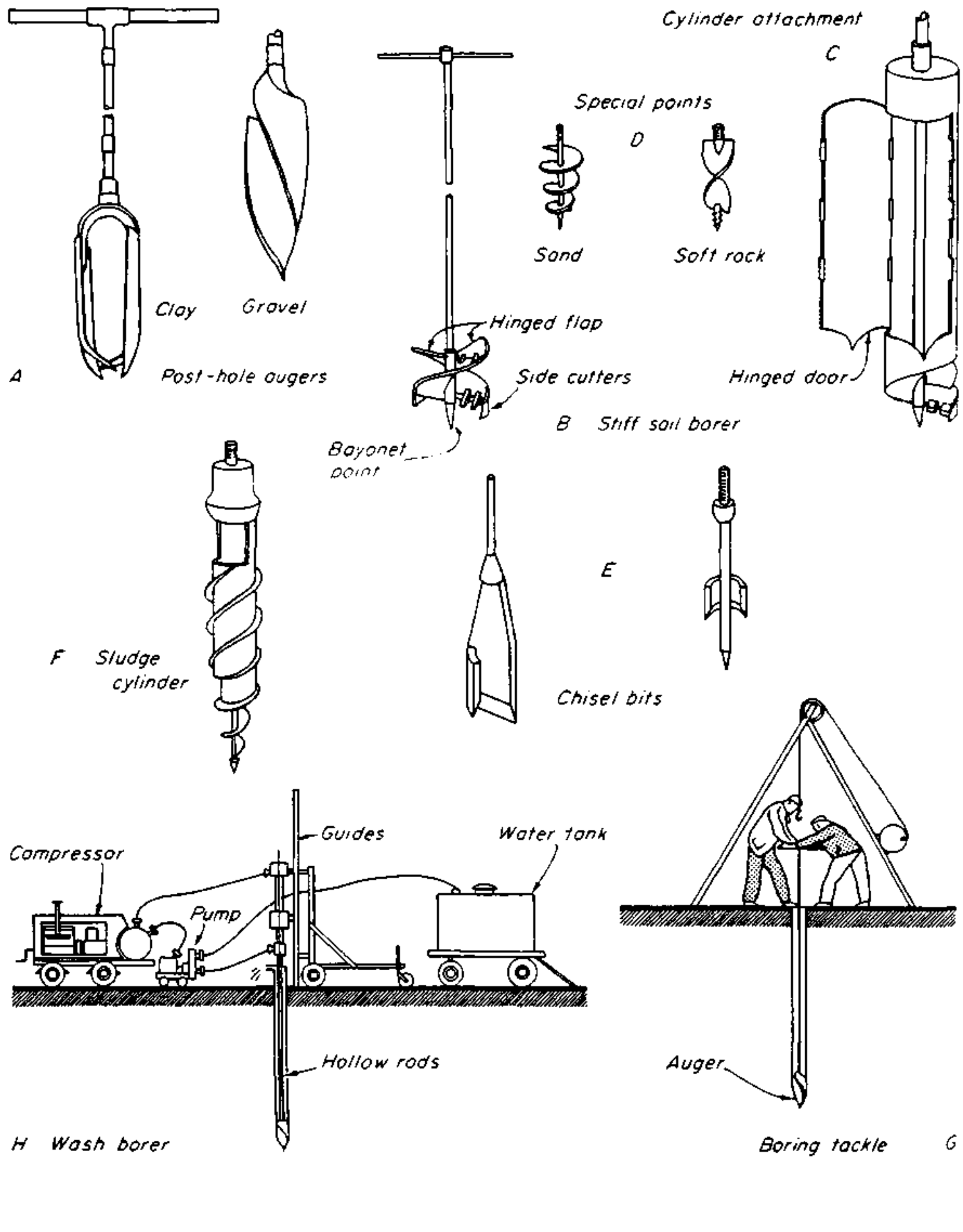

5. FOUDATIONS compiled: D. VOLKE MAY '83	SOIL INVESTIGATIONS	BUILDING CONSTR. LECTURE CET 2031/15.1o3
TCA TECHNICAL COLLEGE ARUSHA CHUO CHA UFUNDI ARUSHA	CIVIL ENGINEER DEPARTMENT	3

BORE HOLES

5.1.1.2 Bore holes

- Are fomed as required on site for the purpose of raising samples of soil for examination.

- Tools:
  a) post-hole anger (simple) having arod with crosshead, it is capable of forming holes in clay or soft soils up to about 6 m deep and Ø 150 mm or more.
  b) for cleeper borings or where rock is expected, either the
     - percussion or the
     - rotary
     method is employed.

A hole is formed by percussion method with a chipsel-shaped steel bit, screwed to a rod;
this is driven vertically in to the ground, lifted, partly rotated and again driven. It has to be repeated rapidly until the desired depth is obtained.
Samples of the soil are obtained during the process.

The rotary method is usually applied to rock formations.
A small hole (Ø 50 mm) is drilled with a rotating bit (having diamonds set round the cutting edge) jointed to a hollow rod.
The cylindrical core of rock thus formed within the tool is broken off at intervals and removed for inspection and testing.

SAMPLING

5.1.1.3 Sampling

The form of samples depends upon the
- nature of the soil
and whether it was
- disturbed or
- undisturbed.

e.g. an undistrubed sample of rock can be obtained if such stratum has been exposed in a trial pit.
It has to be dressed to a cube (at least 75 mm each side).
When it can be tested for
- compression
- permeability etc.
and slides prepared from it can be exmamined.

An undisturbed sample of clay from a trial hole is cut by a knife in the form of a cube, coated with paraffin wax to prevent loss of moisture, placed in an airtight container and labelled ready for testing.

Such a sample can also be obtained from an exposed clay stratum by using a tool called
 - 'sampler' or 'spoon'
There are several types of samplers (e.g. a metal tube Ø 100 - 150 mm, 1 m - 1,5 m long; having an open

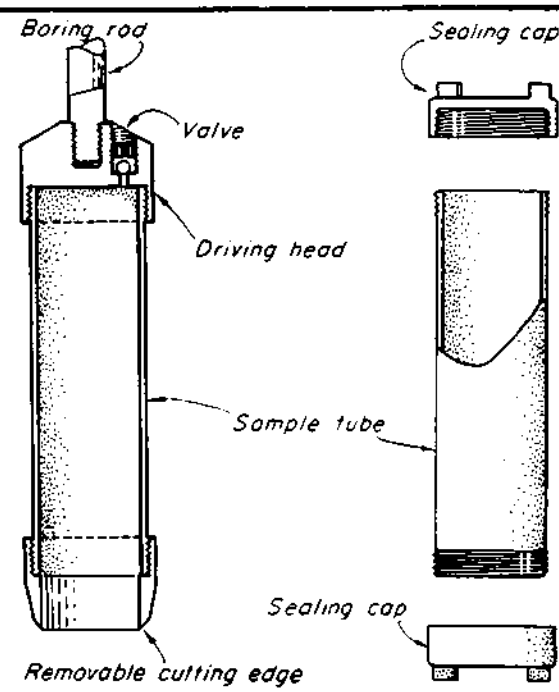

end with a cutting edge and at the opposite closed end there ist an air valve; as the sampler is driven down it gradually fills with clay (air excaping through the valve) it is withdrawn when full and the sample is removed.

Disturbed samples of soils are obtained during the actual boring operation. The sampler is attached to

BOREHOLE RECORD

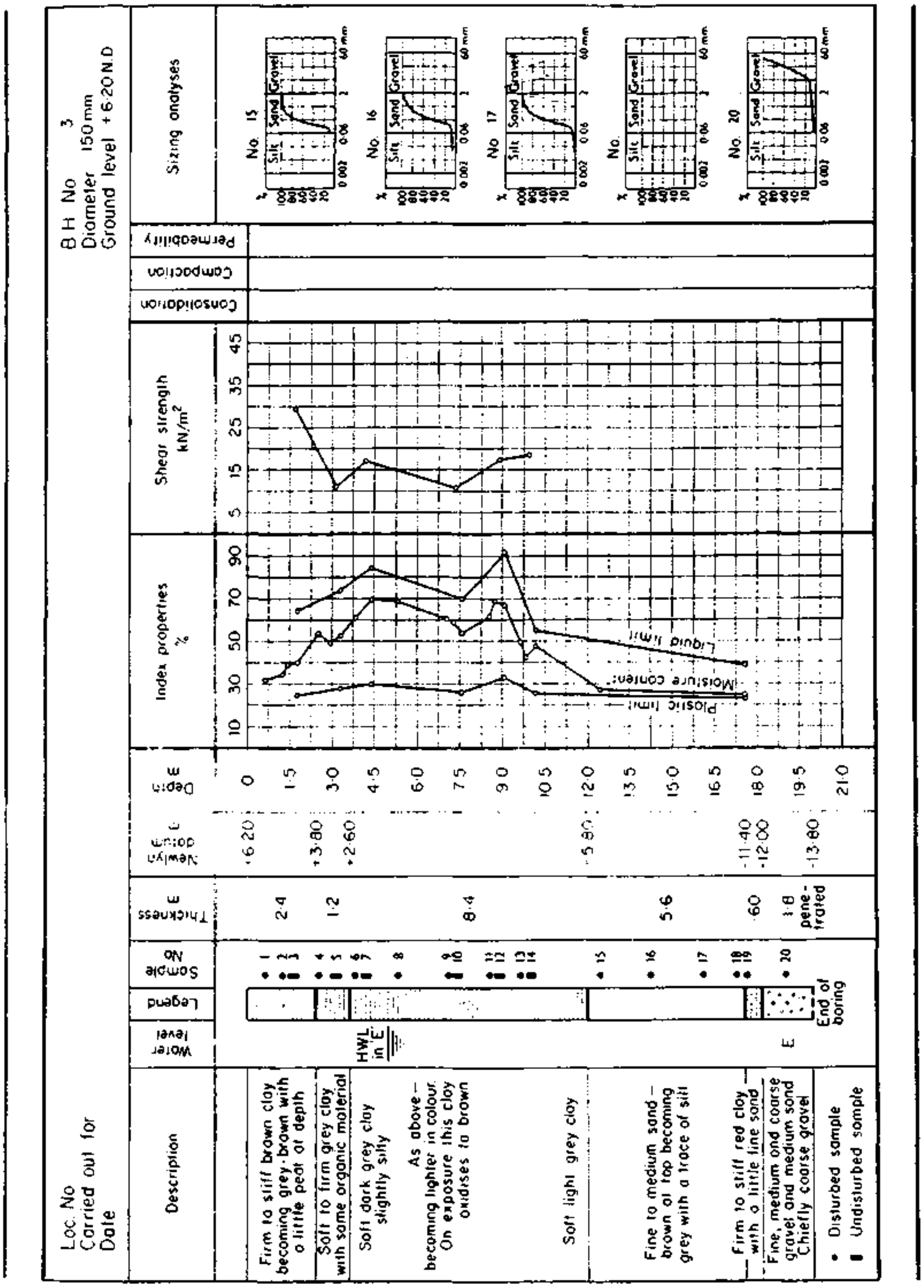

the boring rod in the place of the bit, forced down into the loosened soil and withdrawn when full.

The soil cores are carefully removed from the sampler and placed in a box (about 1,5 m long, divided into compartments) in correct sequence and numbered in their proper order.

When laid end-to-end according to depth they reproduce a section showing the nature and thickness of each stratum.

Small specimens for laboratory tests are taken from the cores as required. These should be placed in an airtight container until needed.

5.1.1.4 Tests

After having examined the samples carefully and the characteristics of the various soils noted and classified, a complete record is made, including a dimensionel sketch of the section showing the thickness and various strata.

Two tests are most important to the foundation designer:

1) consolidation test
2) shear test.

1) Consolidation test is usually applied to clay soils.
   The weight of the Building tends to consolidate the soil by squeezing out the water between the particles - and so producing settlement of the building.
   Test: The soil specimen is placed in a metal Cylinder between two porous stone discs. Pressure is applied and increased by stages, the amount and rate are noted at each stage, a time settlement curve is plotted.
   Result: Probable amount of settlement.

2) The load of a building sets up compression and shear stresses in the soil. The soil tends to squeeze out from under the load.
   The shear stresses are the forces tending to produce this sliding movement between adjacent portions of soil (clay., normally not gravel)
   The safe load which can be supported by a soil depends to a large extent upon its shear resistance.

TESTS

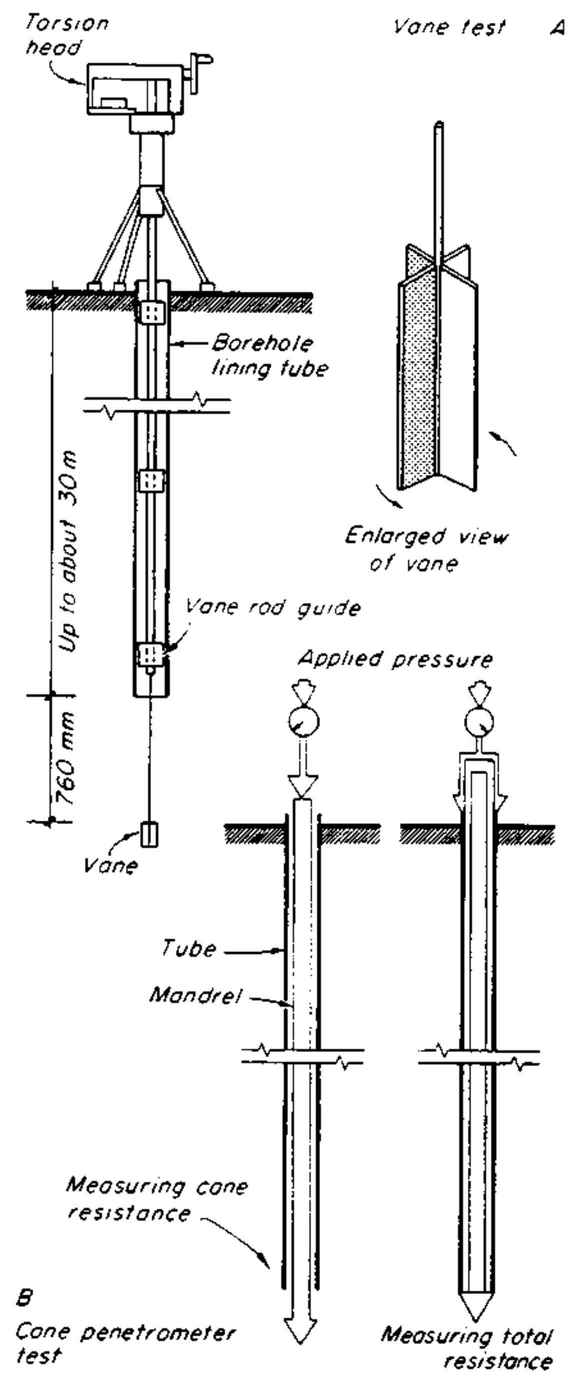

In situ soil tests

Test: A metal box is used(100 mm2 by about 75 mm deep). Two portions (upper and lower halves) are welded to one side of the top half as a projecting arm to which is fastened a length of wire fixed to a scale pan. The bottom half is clamped to the bench top and the wire is passed over the pulley, clamped at the edge of the bench, suspending the pan.
The box is filled completely with clay specimen and weights are placed on the pan until the upper half begins to slide over the lower - as the clay shears through at this level.
The total weight producing this, divided by the internal area of the box gives the shear strength of the soil.

5.1.1.5 Load or bearing test

This test is applied at the proposed level of the foundations (not at ground level!!).
There are several forms of equipment used for this test, two will be described below:

1) Consists of a level concrete raft (say 1,5m2; 30 cm thick) formed at foundation level. It serves as the loading table;

2) a hole is dug at foundation level to recive a square or circular steel sole plate of known area (say 1 m2) bedded level on a cushion of sand;
This supports centrally a steel tube or spindle (say 1,2 m high) having a cross-head forming the base of the loading platform (say 2 m2).
The whole is prevented from tilting by guys or other means, which must be arranged not to restrict the downward movement of the platform.
The weight of the apparatus must be known.

Loading: (same for (1) and (2)

- the table is loaded carefully and uniformly (bars of pig-iron- each of equal weight or bricks - the average weight of twelve being taken as the unit - may be used.)
- the load is applied in increase (say 204 bricks at a time) and at least two hours must elapse between the time one increment has been completed and the next started.
- Fine readings are taken with a dumpy level (with the staff at the centre and at each corner of the table top) immediately before and after each loading.
- The mean settlement is obtained. A record is kept of the readings and a load / mean - settlement curve is plotted.
- The amount of settlement after each increment - loading will depend upon the character of the soil, but if the bearing capacity is satisfactory it will only amount to a few mm.
- When the 'yield point'of the soil has been reached, as indicated when there is an appreciable increase in settlement after the last increment, this increment is removed from the table and the readings again taken after an interval of three or four days.
  If no further settlement has taken place, half the total load on the table (together with the weight of the apparatus) divided by the area of the sole plate is taken as the safe bearing value of the soil.

$$\frac{\text{Total load table}}{2} : \text{area of sole plate}$$

= safe bearing capacity of the soil.

5.1.2 Soils and soil characteristics

The topmost layer of sil at ground level is an unsuitable material on which to found.
- It has been weathered,
- is relatively loose
- contains decayed vegetable matter
- is soft and exessively compressible

It is known as:
- Topsoil or vegetable soil (thickness varies from about 15 - 30 cm).

Below this lies the
- subsoil, from which the topsoil has developed and which consists of solid particles of varying shape and size devived from the weathering of solid rock. The spaces between are filled with water and - to some extent - air.

It is to this subsoil that the word 'soil' refers when used in relation to foundations.

5.1.2.1 Rocks and Soils

A broad classification, comprising five groups is:

1) rocks
2) cohesive soils
3) non-cohesive soils
4) peat
5) made ground.

The table below shows how these are classified and distinguished.

Group	Types of rocks and soils	max. safe - bearing capacity (MN / m2)
I Rocks	Ingeous rocks in sound condition	10
	Massively - bedded lime - stone and hard sandstones	4
	Slates	3
	Hard shales, soft sandstones	2
	Hard clay shales	1
	Hard solid rock	0,64
	Thinly-bedded limestones and sandstones	To be determind after inspection
	Heavily shattered rocks	
II Cohesive Soils	very stiff boulder clays and hard clays with a shaly structure	0.4 - 0.6
	stiff clays and sandy clays	0.2 - 0.4
	firm _"_	0.1 - 0.2
	soft _"_ and silts	0.05- 0.1
	very soft clays and silts	0.05- nil

III non-cohesive soils	sompact well-graded sands and gravel-sands	0.4-0.6
	loose well-graded sands and gravel sands	0.2-0.4
	compact uniform sands	0.2-0.4
	loose uniform sands	0.1-0.2
IV	Reat	To be determind after investigatie
V	Made ground	-"-

These embrace igneons rocks (which include granits) up to heavily shattered rocks

I Rocks

II Cohesive soils

These are soils, the particles of which stick together, such as clays. The degree of cohesion depends upon the size and shape of the particles and the water content. These clays are classified as:
very stiff boulder clays
up to
very soft clays and silts (see fig.)

- Clay soils are subject to shrinkage and cracking in hot dry weather, followed by expansion in wet weather - The change in volume according to their water content.

- Adequate precontions have to be taken!
  Such movement may cause considerable damages to buildings errected on subsoils of very soft clay.

- As the movement decreases with the depth below ground level it is important that foundations should be relatively deep.
  - under external walls at least 90 cm
  - or of pile and beam type
  - or of raft construction

  In addition to having this undesirable property of expanding and contracting, clay soils have a relatively low shear strength and a small safe load bearing capacity.

III Non-cohesive soils
include gravel and sands.
The strength or bearing capacity depends upon
- the grading,
- the packing and
- the average size of the particles.

In general : The better the grading (as distinct from uniformity) - the tighter the packing and : the larger the grains, the bigger the load bearing capacity.

These soils are divided into:
- compact well graded sands and gravel sands

up to
- loose unform sands (see table)

Non cohesive soils vary considerably in their value as building sites.
e.g. A deep bed of dry compact gravel provides an exellent support.
A subsoil of loose, uniform sand (if not confined by sheet piling) may develop considerable settlement when loaded.

The presence of groundwater affects the bearing capacity of soils. Thus, pumping operations may lossen a compact bed of gravel (and reduce the bearing capacity).

IV Peat
is decayed vegetable matter, black or darf brown in colour. It is highly compressible and quite unsuited to receive foundations (even those of light structurs).

If used for foundations - it must be supported on piles which ar driven down to an underlying firm stratum.

V Made ground or fill

This is excavated soil or house refuse, which has been depositied in a depression.

Such sides have to be avoided
- house refuse is in sanitary
- injurious conicals may be in industrial waste
- even excavated soil, such as quarry waste well compacted in thin layers beats a risk of unequal settlement. (foundations to be carried down to the original stratum or be supported by piles.)

SOIL CHARACTERISTICS and BEARING CAPACITIES

Subsoil types	*Condition of subsoil*	*Means of Field Identification*	*Particle size range*	*Bearing capacity kN/m²*	*Minimum width of strip foundations in mm for total load in kN/m of loadbearing wall of not more than* 20	30	40	50	60	70
Gravel	Compact	Require pick for excavation. 50 mm peg hard to drive more than about 100 mm. Clean sands break down completely when dry. Particles are visible to naked eye and gritty to fingers. Some dry strength indicates presence of clay	Larger than 2 mm	> 600	250	300	400	500	600	650
Sand			0·06 to 2 mm	> 300						
Clay	Stiff	Require a pick or pneumatic spade for removal. Cannot be moulded with the fingers. Clays are smooth and greasy to the touch. Hold together when dry, are sticky when moist. Wet lumps immersed in water soften without disintegration	Smaller than 0·002 mm	150–300	250	300	400	500	600	650
Sandy clay			See Sand and Clay	150–300						
Clay	Firm	Can be excavated with graft or spade. Can be moulded with strong finger pressure	See above	75–150	300	350	450	600	750	850
Sandy clay			See Sand and Clay	75–150						
Gravel	Loose	Can be excavated with a spade. A 50 mm peg can be easily driven	See above	< 200	400	600	For loadings of more than 30·0 kN/m run on these types of soil: the necessary foundations do not fall within the provisions of Regulation D7 from which these figures are taken.		Pad foundations generally and surface rafts are designed using the bearing capacities for soils given in this Table. *Note.* See note on facing page regarding the use of values given in this table for bearing capacities of sands and gravels.	
Sand			See above	< 100						
Silty sand			See Silt and Sand	May need to be assessed by test						
Clayey sand			See Clay and Sand	ditto						
Silt	Soft	Readily excavated. Easily moulded in the fingers. Silt particles are not normally visible to the naked eye. Slightly gritty. Moist lumps can be moulded with the fingers but not rolled into threads. Shaking a small moist pat brings water to surface which draws back on pressure between fingers. Dries rapidly. Fairly easily powdered	0·002 to 0·06 mm	75	450	650				
Clay			See above	75						
Sandy clay			See Sand and Clay	May need to be assessed by test						
Silty clay			See Silt and Clay	ditto						
Silt	Very soft	A natural sample of clay exudes between the fingers when squeezed in fist	See above	< 75	600	850				
Clay			See above	< 75						
Sandy clay			See Sand and Clay	May need to be assessed by test						
Silty clay			See Silt and Clay	ditto						
Chalk	Plastic	Shattered, damp and slightly compressible or crumbly	—	—	Assess as clay above					
Chalk	Solid	Requires a pick for removal	—	600	Equal to width of wall					

5.1.2.2 Stresses and pressures

Cohesive soils present serious problems when giving consideration to foundation choice and design.
The two major conditions to be considered are:

Shearing stress: the maximum stress under a typical foundation carrying a uniformly distributed load will occur on a semi - circle whose radius is equal to half the width of the foundation and the isoshear line value will be equal to about one-third the applied pressure - see Fig. The magnitude of this macimum pressure should not exceed the shearing resistance value of the soil.

Vertical pressure: this acts within the mass of the soil upon which the unacceptable settlement of the structure.
Vertical pressures can be represented on a drawing by connecting together points which have the same value forming what are termed pressure bulbs.
Most pressure bulbs are plotted up to a value of 0.2 of the pressure per unit area which is considered to be the limit of pressure which sould influence settlement of the structure.
Typical pressure bulbs are shown in the fig.
A comparison of these typical pressure bulbs will show that generally vertical pressure decreases with depth, the 0.2 value will occur at a lower level under strip foundations than under rafts, isolated bases and bases in close proximity to one another which form combined pressure bulbs. The pressure bulbs illustrated in the fig. are based on the soil being homogeneous throughout the depth under consideration. As in reality this is not always the case it is important that soil investigation is carried out at least to the depth of the theoretical pressure bulb.

Great care must be taken where an underlying strata of highly compressible soil is encountered to ensure that these are not over stressed if cut by the anticipated pressure bulb.

Contact pressure
It is very often incorrectly assumed that a foundation which is uniformly loaded will result in a uniform contact pressure under the foundation. This would only be true if the foundation was completely flexible such as the bases to a pin jointed frame. The actual contact pressure under a foundation will be governed by the nature of the soil and the rigidity of the foundation, and since in practice most large structures have a rigid foundation the contact pressure distribution is not uniform. In cohesive soils there is a tendency for high stresses to occur at the edges which is usually reduced slightly by the yielding of the clay soil. Non-cohesive soils give rise to a parabolic contact pressure distribution with increasing edge pressures at the depth below ground level of the foundation increases. When selecting the basic foundation format consideration must be given to the concentration of the major loads over the position where the theoretical contact pressures are at a minimum to obtain a blanced distribution of contact pressure - see fig.

Plastic failure
This is a form of failure which can occur in cohesive soils if the ultimate bearing capacity of the soil is reached or exceeded. As the load on a foundation is increased the stresses within the soil also increases until all resistance to settlement has been overcome.
Plastic failure, which can be related to the shear strength of the soil, occurs when the lateral pressure being exerted by the wedge of relatively undisturbed soil immediately below the foundation causes a plastic shear failure to develop resulting in a heaving of the soil at the sides of the foundation moving along a slip circle or plane. In practice this movement tends to occur on one side of the building, causing it to tilt and settle - see fig. Plastic failure is likely to happen when the pressure applied by the foundation is approximately six times the shear strength of the soil.

TYPICAL PRESSURE BULBS

STRIP FOUNDATIONS

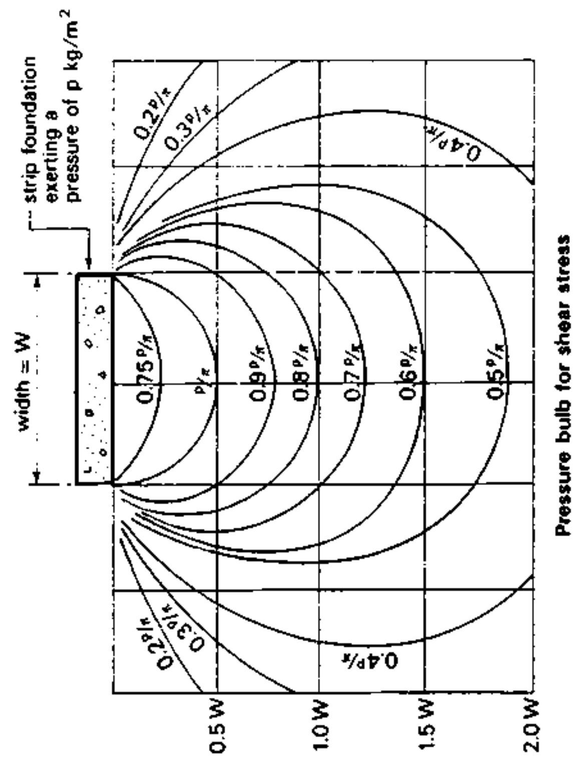

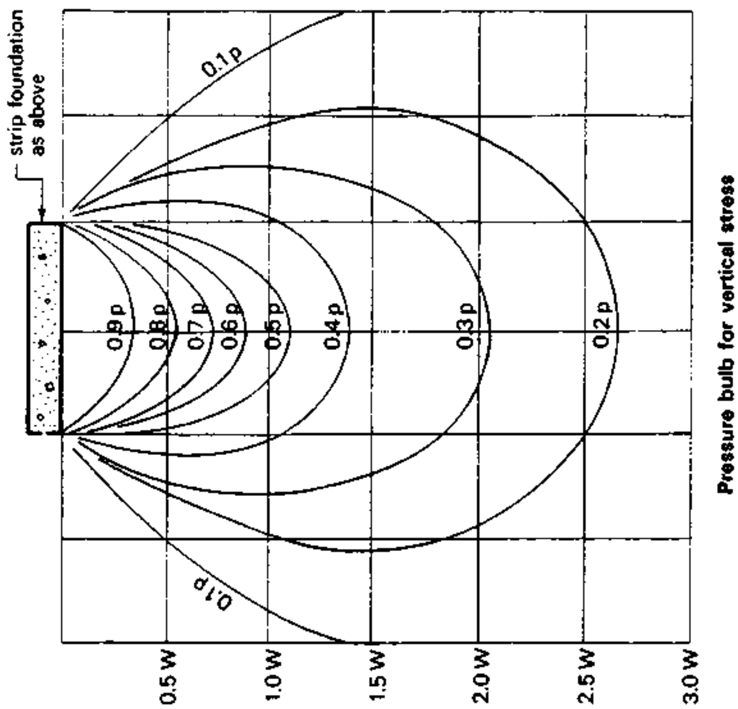

RAFT OR SIMILAR FOUNDATIONS

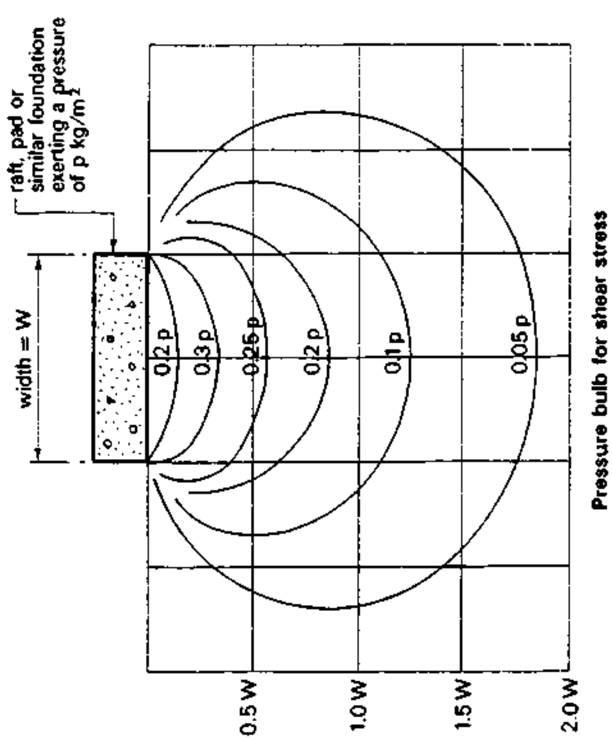

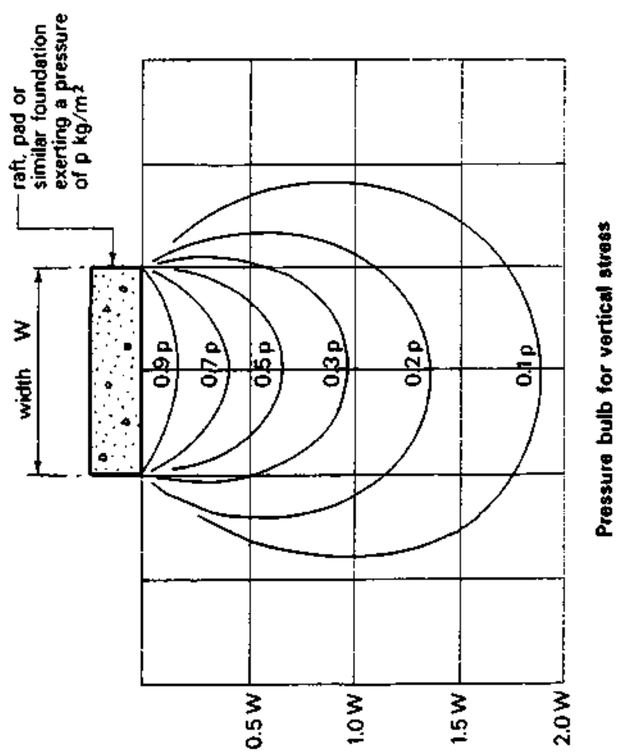

TYPICAL CONTACT PRESSURES

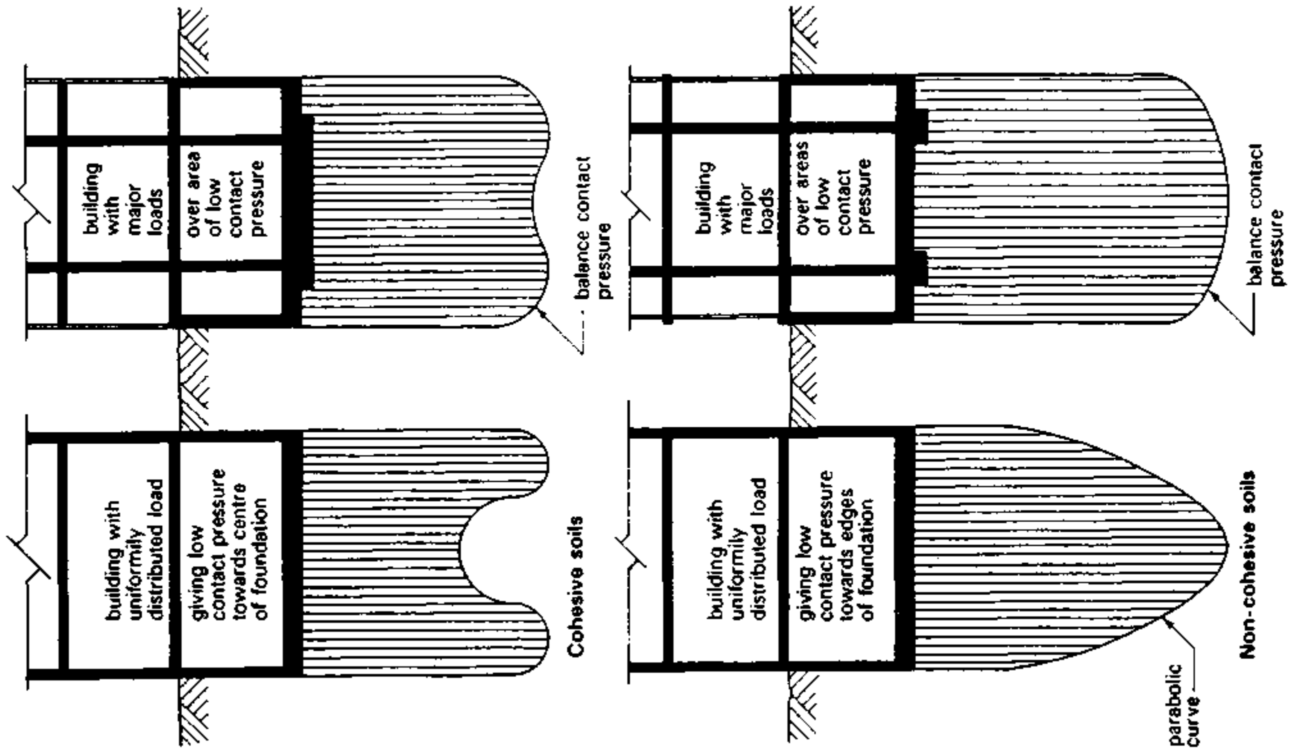

PLASTIC FAILURE of foundations

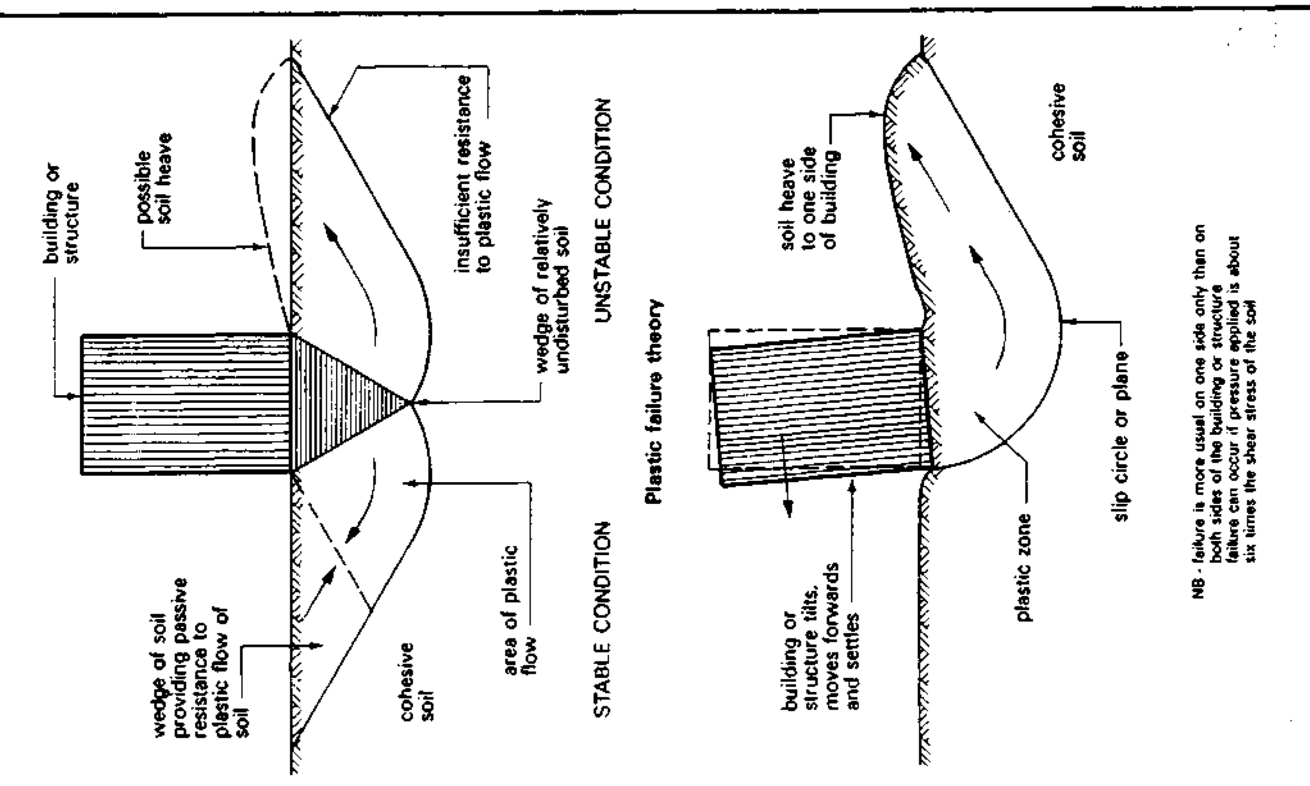

5. FOUNDATIONS compiled: D. VOLKE MAY '83	SOIL INVESTIGATIONS	BUILDING CONSTR. LECTURE CET 2031/15.113

5.2 EXCAVATIONS AND TIMBERING

5.2 EXCAVATIONS AND TIMBERING

- Trenches which have to be dug for the foundations of walls are usually excavated by hand - in bigger building projects also mechanical trench diggers are used.
- If the trenches are of any depth it may be necessary to erect temporary timber supports to stop the sides of the trench from fallin in.
- The nature of the soils being excavated mainly determines at what depth of trench timber supports to the sides should be used.
- Soft granular soils readily crumble and the sides of trenches have to be supported for the full depth.
- Dry granular soils such as sand and made up ground may need closely spaced timbering to the sides. See fig.

The sizes of timbers shown in the drawings are for guidance only.

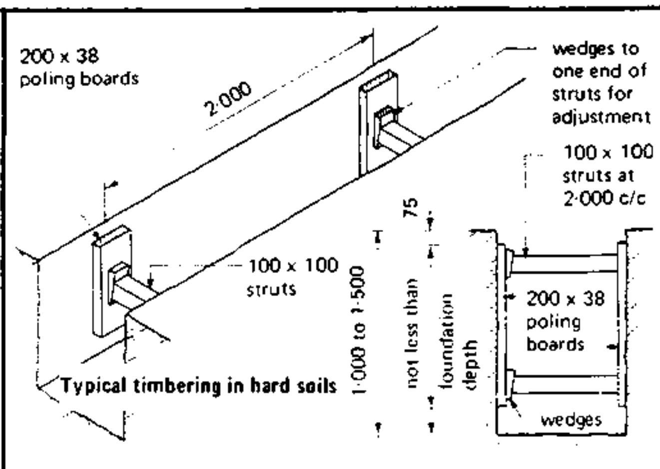

Typical timbering in hard soils

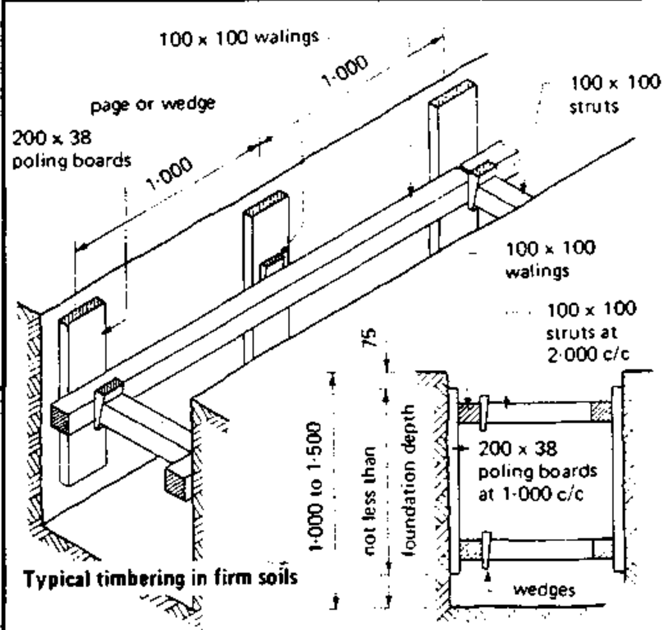

Typical timbering in firm soils

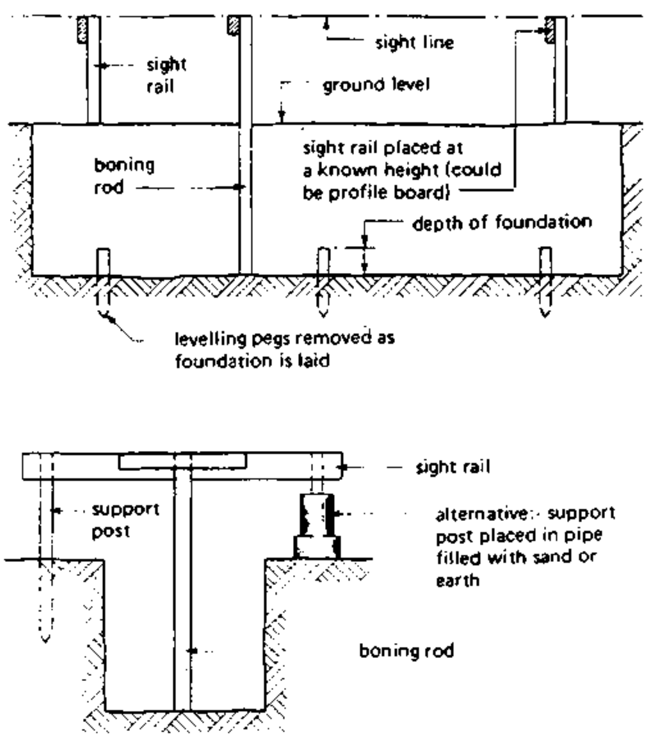

Trench excavations

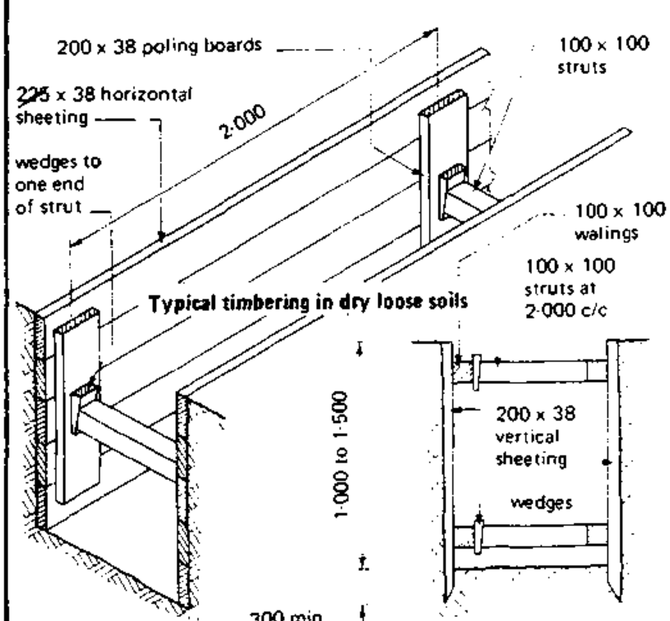

Typical timbering in dry loose soils

Once the excavations are finished, the foundations should be laid as soon as possible to prevent the ground from drying out and causing movement by shrinking. The ground immediately below the foundation is called the GROUND BEARING or the NATURAL FOUNDATION and should be levelled of and well rammed to receive the base. This is to ensure that there is no loose earth beneath the concrete base which could fail to hold the loading and thus cause a fracture.

- Clay soils do not usually require support for some depth (say 1.5 m) particularly in dry weather.
  In rainy weather, if the bottom of a trench in day soil gets filled with water, the water may wash out the clay from the sides at the bottom of the trench.
- The purpose of temporary timbering supports to trenches is to uphold the sides of the excavation as necessary, to avoid collapse of the sides.
- Whatever timbering is used there should be struts, that is horizontal members, fixed across the width of trenches. All struts must be firmly secured so that they are not easily knocked out of position.
- The sides of deep trenches in compact soils such as clay should - if necessary - be timbered as shown in the fig.
- If the soil is soft, such as loam, more closely spaced timbering will be needed as shown in the fig.

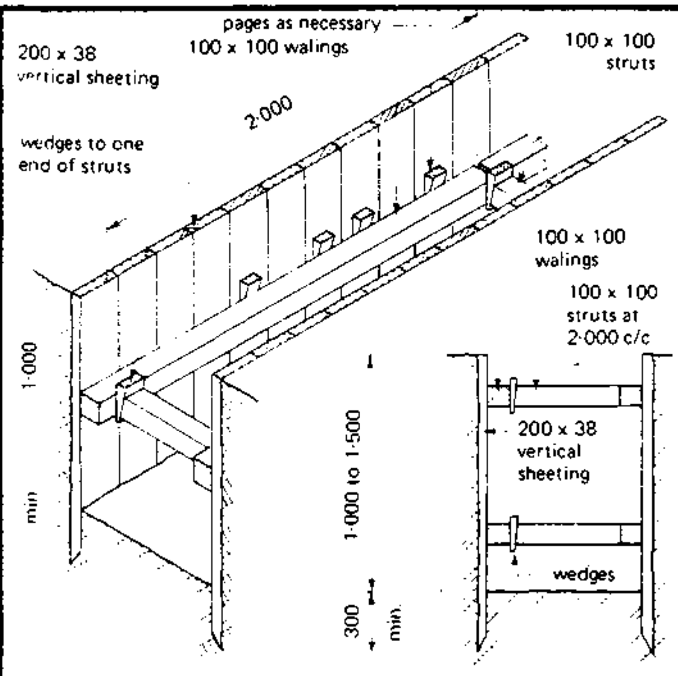

Typical timbering in loose wet soils

Adjustable metal struts—BS 4074

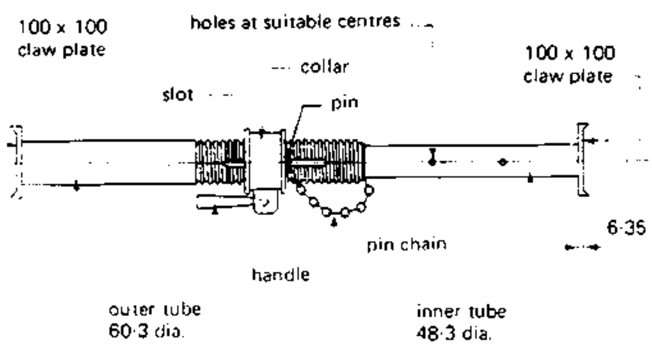

SIZE No.	MINIMUM LENGTH	MAXIMUM LENGTH
0	0·30 m	0·45 m
1	0·45 m	0·68 m
2	0·68 m	1·06 m
3	1·06 m	1·67 m

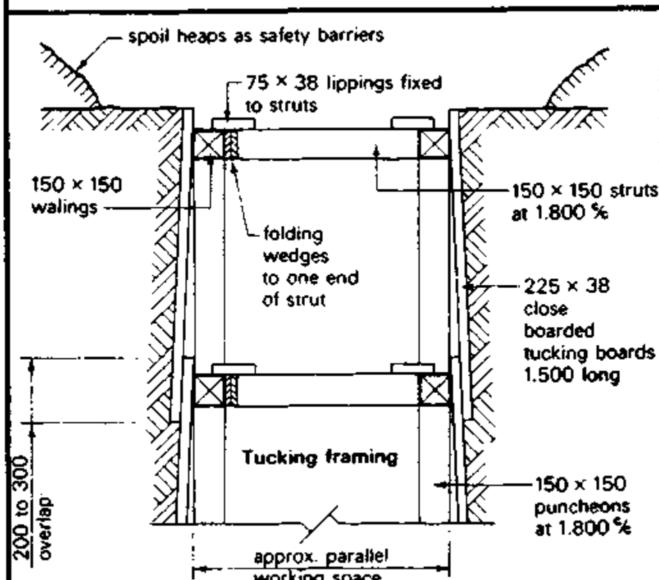

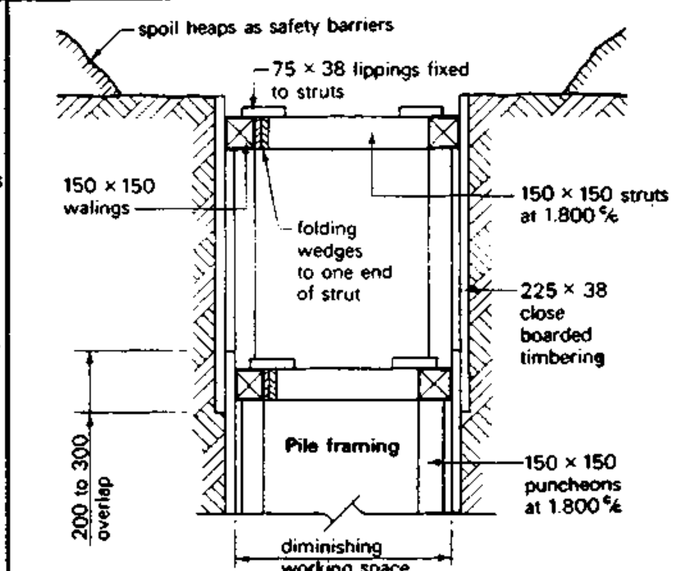

5.3 TYPES OF FOUNDATIONS

5.3.1 Classification
The many forms of foundations used in building work may be divided broadly into
I SHALLOW FOUNDATIONS and
II DEEP FOUNDATIONS

I Shallow foundations transfer the load to the soil at a level close to the lowest floor of the building and include SPREAD FOUNDATIONS in the form of
- strip foundations
- pad foundations and
- raft foundations

II Deep foundations include
- pile foundations and
- various types of piers which transfer their loads to the soil at a considerable distance below the underside of the building.

Shallow foundations are always the cheapest. An exeption may be the use of short bored piles instead of strip foundations in shrinkable clays.

STRIP foundations = under continous walls
PAD(or slab) -"- = under isolated piers or colums
are used on sites where a sufficient depth of reasonably strong subsoil exists near the surface of the ground.

RAFT foundation =
by which the whole of the building area is covered, are used e.g. where no firm bearing strata of soil exists at a reasonable depth below the surface and a maximum area of foundation is required to bring the imposed pressures within the low bearing capacity of the weaker soils and of some made-up ground.

PIERS and PILES =
may be viewed as columns passing through weak soil to transmit the building load to lower strata where the pressure can be safely resisted. They may also be used to transfer loads to the soil below the level likely to be affected by moisture movement.

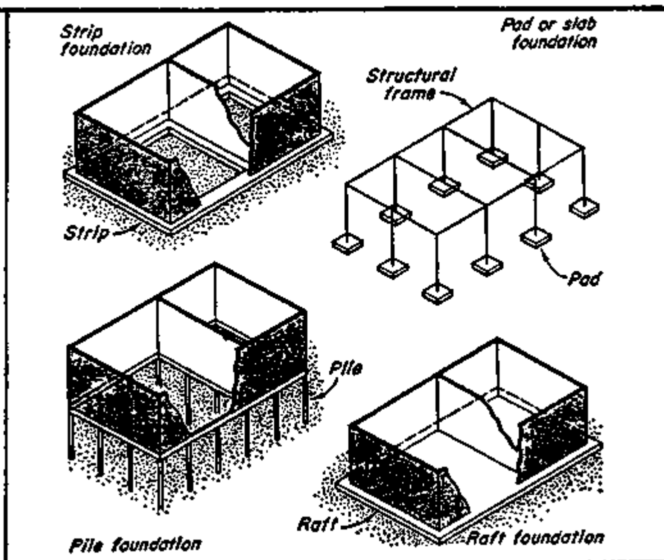

5.3.2 Choice of foundation

The choice of a foundation must take account of both - soil and superstructure

For example: A stiff rigid building, one with plain monolithic concrete walls, will be affected by differential movement to a greater extent than one with brick or block walls. Within certain limits distortion can be accommodated in the latter by fine cracks distributed throughout the joints whereas in the former the distortion will rapidly cause large cracks to be formed.
In the case of small scale buildings the nature of the structure in respect of different movement is less important.

- Foundation design requires an appreciation of the ability of the structure to withstand relative movements without dangerous overstress and damage to the structure.

- Small scale buildings affect the soil at shallow depth only, so that account need to be taken only of soil movement due to causes other than loading.

- Where the soil is stable the possible causes of movement will be changes in moisture content of the soil. Movement can be avoided by placing the foundation at an adequate depth.

- on unstable soils, special measures must be taken whatever the scale of the building.

- Overall or total settlement must be limited so that services and drains connected to the building are not damaged, alternatively, provision must be made for flexible connections.

- The table below indicates the sutibility of the foundation types described above to the various types of soil.

CHOICE OF FOUNDATIONS

Soil type and site condition	Foundation	Details	Remarks
Rock, solid chalk, sands and gravels or sands and gravels with only small proportions of clay, dense silty sands	Shallow strip or pad footings as appropriate to the load-bearing members of the building	Breadth of strip footings to be related to soil density and loading (see Fig. 4.2). Pad footings should be designed for bearing pressures tabled in CP 101 : 1963. For higher pressures the depth should be increased and Civil Engineering Code of Practice No. 4. 'Foundations' consulted	Keep above water wherever possible. Slopes on sand liable to erosion. Foundations 0.5 m deep should be adequate on ground susceptible to frost heave although in cold areas or in unheated buildings the depth may have to be increased. Beware of swallow holes in chalk
Uniform, firm and stiff clays: (1) Where vegetation is insignificant	Bored piles and ground beams, or strip foundations at least 1 m deep	Deep strip footings of the narrow widths shown in Fig. 4.3 can conveniently be formed of concrete up to the ground surface	Downhill creep may occur on slopes greater than 1 in 10. Unreinforced piles have been broken by slowly moving slopes
(2) Where trees and shrubs are growing or to be planted close to the site	Bored piles and ground beams	Bored piles dimensions as in page 65.	
(3) Where trees are felled to clear the site and construction is due to start soon afterward	Reinforced bored piles of sufficient length with the top 3 m sleeved from the surrounding ground and with suspended floors, or thin reinforced rafts supporting flexible buildings, or basement rafts		
Soft clays, soft silty clays	Strip footings up to 1 m wide if bearing capacity is sufficient, or rafts	See page 63 and CP 101 : 1963	Settlement of strips or rafts must be expected. Services entering building must be sufficiently flexible. In soft soils of variable thickness it is better to pile to firmer strata (See Peat and Fill below)
Peat, fill	Bored piles with temporary steel lining or precast or *in situ* piles driven to firm strata below	Design with large safety factor on end resistance of piles only as peat or fill consolidating may cause a downward load on pile (*see Digest 63*) Field tests for bearing capacity of deep strata or pile loading tests will be required	If fill is sound, carefully placed and compacted in thin layers, strip footings are adequate. Fills containing combustible or chemical wastes should be avoided
Mining and other subsidence areas	Thin reinforced rafts for individual houses with load-bearing walls and for flexible buildings	Rafts must be designed to resist tensile forces as the ground surface stretches in front of a subsidence. A layer of granular material should be placed between the ground surface and the raft to permit relative horizontal movement	Building dimensions at right angles to the front of long-wall mining should be as small as possible

Soil type and site condition	*Foundation*	*Remarks*
Rock, solid chalk, sands and gravels or sands and gravels with only small proportions of clay, dense silty sands	Shallow strip foundations, pad foundations, (as appropriate to the load-bearing members of the building) Surface raft See Table 10	Keep above water wherever possible. Slopes on sand liable to erosion. Foundations to be 460 mm below ground level on ground susceptible to frost heave (see text)
Uniform, firm and stiff clays: 1 Where vegetation is insignificant	Strip or pad foundations at least 1·07 m below ground level Bored piles See Tables 10 & 12	With these soils downhill creep may occur on slopes greater than 1 in 10. Unreinforced piles have been broken by slowly moving slopes
2 Where trees and shrubs are growing or to be planted close to the site	Bored piles See Table 12	
3 Where trees are felled to clear the site and construction is due to start soon afterward	Reinforced bored piles of sufficient length with top 3 m sleeved from the surrounding ground and with suspended floor Thin reinforced rafts supporting flexible superstructure Basement rafts See Part 2	
Soft clays, soft silty clays	Strip foundations up to 850 mm wide if bearing capacity is sufficient See Table 10 Rafts See Part 2	Settlement of strips or rafts must be expected. Services entering building must be sufficiently flexible. In soft soils of variable thickness it is preferable to pile to firmer stratum
Fill (made up ground) Peat	Pier foundations Piles driven to firm stratum below Special raft foundations with or without flexible superstructure See Part 2	If fill is sound, carefully placed and compacted in thin layers, strip foundations are adequate
Mining and other subsidence areas	Special raft foundations with or without flexible superstructure See Part 2	

Table 11 Suitability of foundation types to various soils
Based on information in Building Research Digest 67

5.3.3 Spread foundations

Must be designed so that
- the soil is not overstressed
- the pressure on the soil under them is equal at all points

in order to avoid unequal settlement under the actual foundation.

This is ensured by providing sufficient area of foundation and by arranging the centre of gravity of the applied loads to coincide with the centre of area of the foundation.

Strip foundations and pad foundations require the foundation to be placed symmetrically with the wall or column it supports

- If the load is applied eccentrically, the pressure on one side will be greater than the average pressure, causing greater consolidation of the soil on that side of the foundation.
- When the eccentricity is great, the increased stress could exceed the safe bearing capacity of the soil, even though the average stress might be well below it.
- When the eccentricity is greater than 1/6 of the foundation width, tensile stress occurs and causes the foundation to rise off the soil.

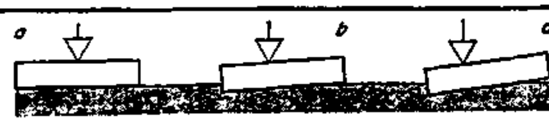

Effect of eccentric loading on foundations

STRIP FOUNDATIONS

5.3.3.1 Strip foundations

Consist of a strip of concrete under a continous wall carrying a uniform by distributed load.

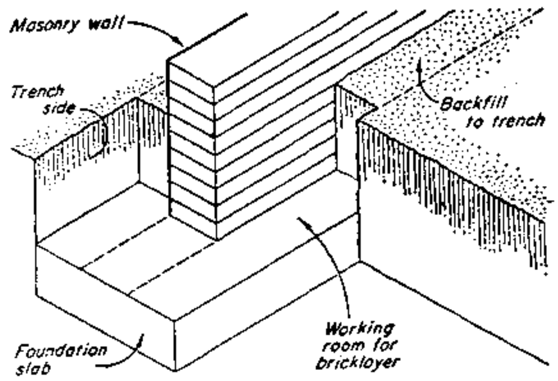

Strip foundation

The required area (as in case of all spread foundations) is related to the imposed load and the bearing capacity of the soil.

The imposed load is considered as load /m the width of the strip is made such as to give sufficient area/m run of foundation.

e.g. If the loading is 30 KN/m and the soil is stressed not more than 50 KN/m2 the min. width should be 0.60 m. (load : stress). That means : In every metre run of foundation the load of 30 KN will be distributed over 0.60 m2 of soil, resulting in a pressure of 50 KN/m2.

In cases of light loading on reasonably strong soils a strip no wider than the wall it carries may be sufficient.
In practice, with masonry walls some spread is usually provided (12,5-15,0 cm on each side) to allow working room. This also provides some stability to the wall before it is tied in by floors and roof.

For hand excavation : min. width 60 - 75 cm depending on the depth.

The stresses in the soil due to loading have to be well within the lowest limit of safe bearing capacity for any particular soil type, resulting in wider foundations than those which would fully stress the soil. This is the basis of the minimum widths laid down for stripe foundations in the Building Regulations and given in the table below.

Where the adges of a foundation project beyond the faces of the wall it supports bending due to contilever action will occur as a result of the resistance of the soil, causing bending and shear stresses in the foundation.

The tensile strength of unreinforced concrete is low, and in order to keep these stresses within the capacity of the concrete : the strip must be of adequate depth.

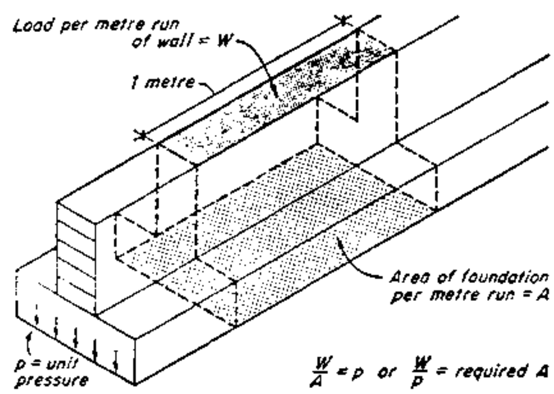

Foundation width

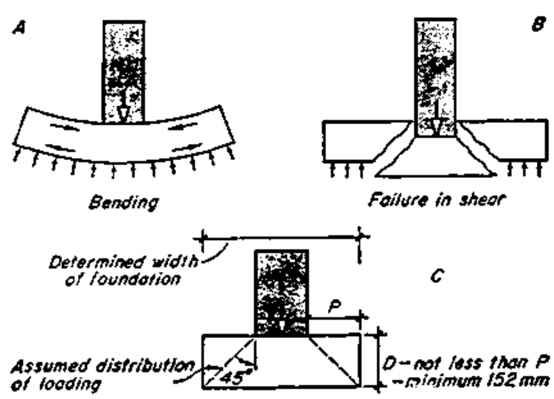

Foundation depth

DEEP STRIP FOUNDATIONS

Concrete fails under a compressive load usually by tensile shear failure along planes lying at an angle of about 45° to the horizontal.

Code of Practice 101: 1963 requires an angle of spread of load from the wall base to the outer edge of the foundation of not more than 45° which results in the thickness being not less than the projection of the base beyond the face of the wall it carries.

Vary wide strips are reinforced to keep their depth within economic limits.

Heavy loads concentrated at points in the run of a wall carrying otherwise uniformly distributed load will result in greater loads on the foundation at these points.
In order to ensure equal stresses at all points in the soil these extra loads must be distributed to the soil through larger foundation areas.

For mass concr., a 1:3:6 mix is commonly used, with fairly large aggregate - say 38-50 mm. Concrete should be poured as soon as possible after excavation of trences.
(Clays and chalk soils losing strength when become wet; clay drying -out causes shrinkage which is followed by expansion).
If concr. cannot be placed on completion of excavation, the bottom should be protected by 5 cm of weak concr. blinding, or 7,5 cm to 10 cm of soil should be left for excavation immediately prior to concreting.

Brick footings: Another way of speading the load of the walls to the soil is to make the base of the wall thicker by means of off-sets called footing courses.
The wall is built with 1/4 B off-sets each side for every course of bricks.
The effect is: a larger surface area in contact with the ground

5.3.3.2 Deep strip foundations

Firm or stiff shrinkable clays are strong and when carrying light loads necessiate quite small foundations (possibly not wider than the wall carried). But these soils move considerably with changes in moisture content, therefore the bottom of the foundation should be at least 1 m below ground level.
Narrow excavation is required (perhaps 30 cm wide and more than 1 m deep)

- it has to be dug by mechanical means and filled with concrete to within a few cm of the ground surface.
- much less soil has to be excavated and backfilling is eliminated.
- where conditions are suitable it is cheaper to construct and quicker to complete than the wider strip foundations.

The conditions necessary to make it economic are

1) a self-supporting soil to avoid timbering (firm, shrinkable clays possess this characteristic)
2) adequate runs of straight trenching with a min. amount of corner trimming (to justify the cost of a mechanical excavator).

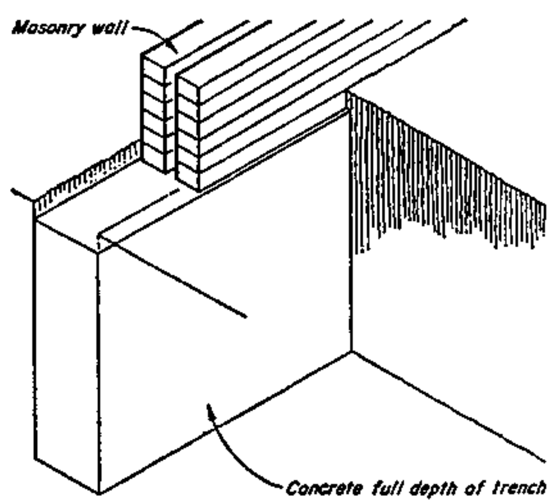

Deep strip foundation

STEPPED FOUNDATIONS

5.3.3.3 Stepped foundations

Exept in certain types of structures transferring inclined thrusts to the ground all foundations must bear horizontally on the soil.

If strip foundations to a building on a sloping site are at the same level throughout, those on the higher side will be greater distance below ground level than the remainer, necessiating deeper trenches and a greater amount of walling in the soil.

There are two ways in which this building into the soil may be reduced:

1) by cut or cut-and-fill to provide a horizontal plane off which to build

2) by stepping down the slope of the foundations to those walls parallel to the slope.

Overlap to be not less than T or 2 x H, which ever is the greater with a min. of 30 cm.

Foundations on sloping sites

The steps should be relatively short and sufficient in number to keep their heights small and uniform. (Height of step should not exceed the thickness of the foundation).

The lengths need not be uniform, but should be varied (where necessary) to keep the heights as uniform as possible.

Ex each step the higher foundation must lap over the lower.

The foundations should be so arranged that a step accurs at any intersection with a cross wall, the step being on the side where the groundlevel is highest.

On sloping sites it is advisable to lay subsoil drainage, in the form of land drains, across the slope on the uphill side of the building.

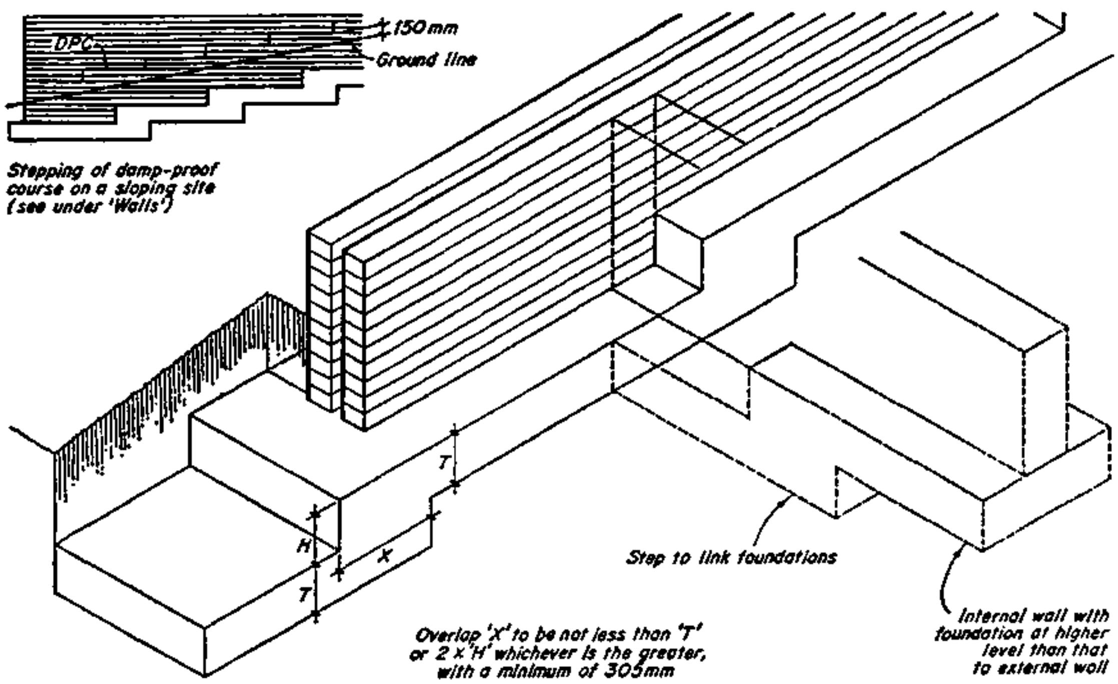

Stepping of damp-proof course on a sloping site (see under 'Walls')

Stepped foundation

PAD FOUNDATIONS

5.3.3.4 Pad foundations

Isolated piers or columns are normally carried on an independet slab of concrete, commonly called a PAD FOUNDATION the pier or column bearing on the centre point of the slab.

The area of foundation is determined by dividing the column load by the safe bearing capacity of the soil and its shape is usually a square.

Its thickness is governed by the same considerations as for strip foundations and is made not less than the projection of the slab beyond the face of the pier or column or the edge of the baseplate of a steel column.

It should in no case be less than 150 mm thick. As in the case of strip foundations when a column base is very wide a reduction in thickness may be effected by reinforcing the slab.

In a framed structure where loads on different columns vary, the sizes of the bases must vary in order to maintain equal soil pressure under each and thus eliminate differential or unequal settlement.

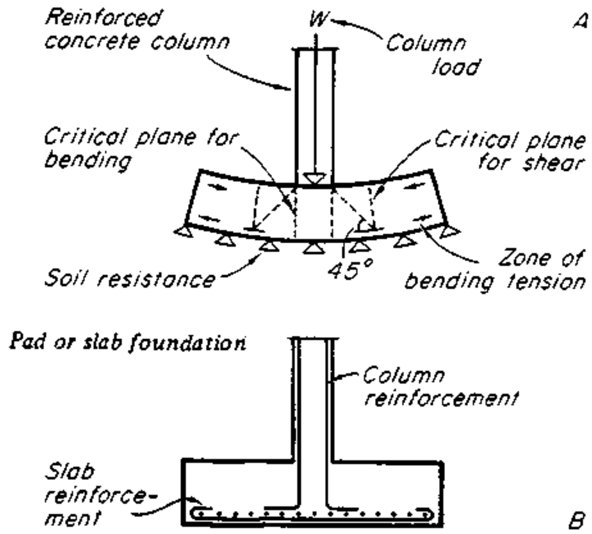

Pad or slab foundation

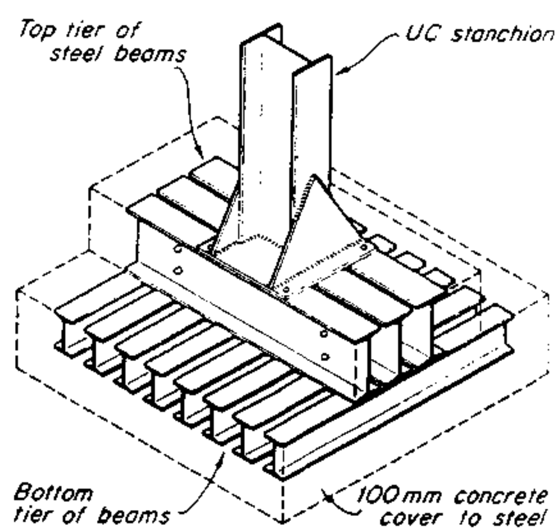

Steel grillage foundation

RAFT FOUNDATIONS

5.3.3.5 Raft foundations

A RAFT FOUNDATION is a large slab foundation covering the whole building area, through which all the loads from the building are transmitted to the soil. When used for the purposes described here they are laid on, or just below the surface of the ground and are termed surface rafts.

Solid concrete ground floor slab construction is normal today. This slab, if about 150 mm thick and lightly reinforced, may be used as a light raft on all types of firm soils. Reinforcement is required at the top for crack control with some steel at the bottom under walls or columns to resist tensile stress in these zones, see fig. The raft should be extended about 300 mm beyond the perimeter walls. On sands it is preferable to form a 'downstand'edge all round to prevent erosion of the soil under the perimeter of the slab. If used on shrinkable clays the soil under the external walls should be protected from moisture changes and consequent movement by an extension of the slab 1.22 m to 1.5 m beyond the walls, see fig.

In this case reinforcement is generally as for rafts on other soils but top and bottom reinforcement must be provided under the external walls and in the extension to resist the tensile stresses at the top due to loads on the extension when the soil has shrunk under the slab edge and at the bottom due to the pressure of the clay when it swells.

Light surface rafts can also be used to carry lightly loaded structures of certain types on soils subject to general earth movement.

As in all spread foundations the centre of gravity of the loads should coincide with the centre of area of the raft. This is facilitated when the building has a simple regular plan form with loadbearing elements such as walls, columns, stacks, disposed symmetrically about the axis of the building. Heavy elements such as stacks are best situated near the centre of the plan Excessive variation of loading results in problems which need careful consideration in the design of the foundation.

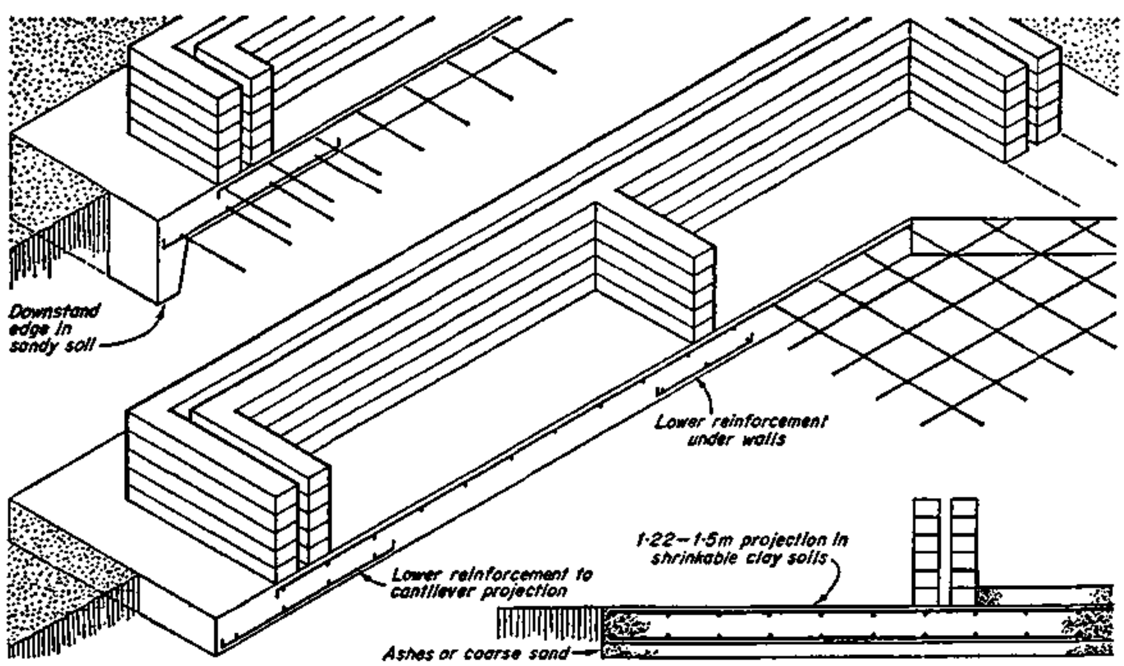

Surface raft foundation

PILE FOUNDATIONS

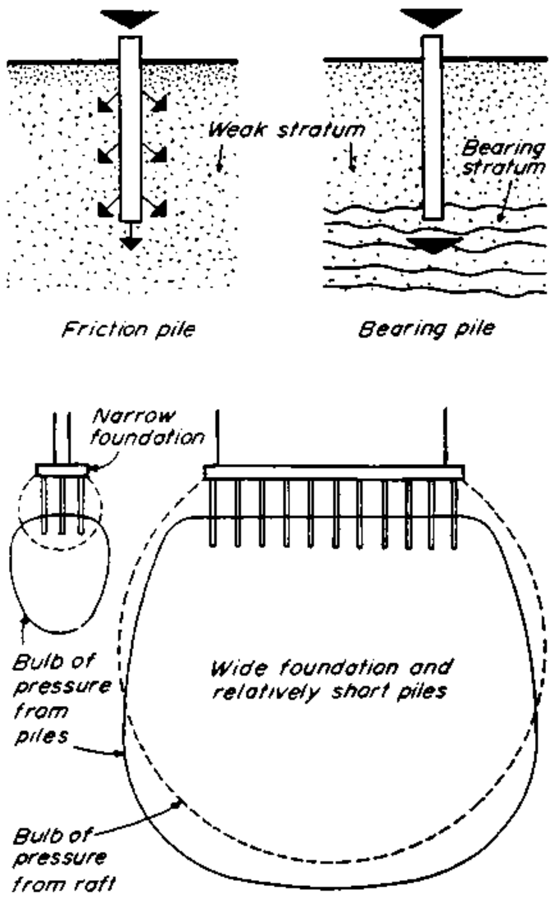

Pile foundations

5.3.4. Pile foundations

PILES are often used to transmit loads through soft soils or made-up ground. IN such circumstances, unless large in diameter, the piles will normally need to be reinforced. Piles of relatively short length can, however, be used economically in firm shrinkable clay as a means of founding below the zone of moisture movement. Such piles require no reinforcement because the diameter being large relative to length, the piles are stiff and they also receive considerable support from the firm soil through which they pass. In this type of soil the piles can be easily and quickly formed by boring. This particular form of pile is, therefore, called a short bored pile.

5.3.4.1 Short bored pile foundations

In shrinkable clays this foundation has a number of practical advantages over strip foundations: a reduction in the amount of excavated spoil, a cleaner site, faster construction and the fact that work can continue in weather which would make tranch digging impracticable. When mechanically bored in sufficient numbers this type of foundation is competitive in cost with a traditional strip foundation of appropriate depth. For a single building it may be slightly dearer than a deep strip foundation, although against this must be placed the advantages of the piles. Generally speaking, the stiffer the clay the cheaper will this type of foundation be relative to strip foundations.

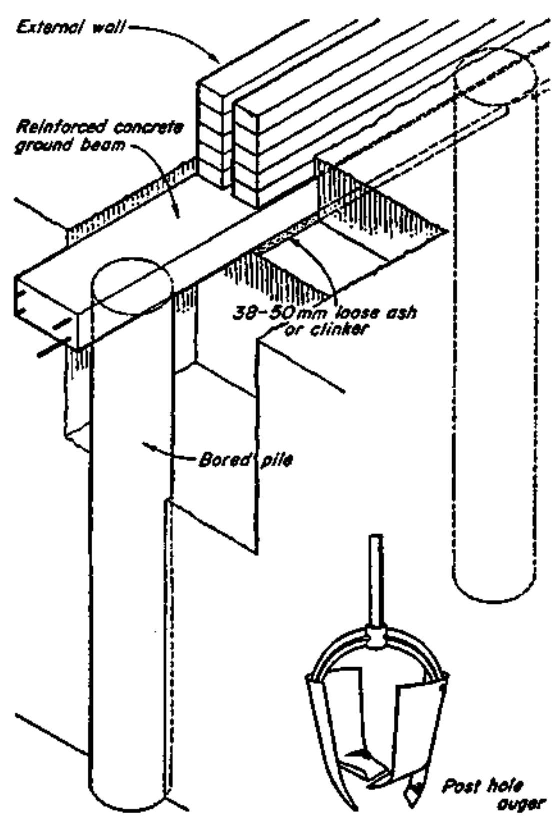

Short bored pile foundation

In order to obtain the advantages of greater speed and economy relative to strip foundations the clay must be suitable for easy boring. If many tree roots are present and the soil contains a great number of stones, especially if large, trench digging is likely to be quicker and cheaper than boring for piles, although if mechanical boring can be used, auges larger than hand boring will permit can be adopted which cope more easily with stones.

Mechanical boring is much quicker than hand boring, especially when the holes must be large, but to be economic requires a sufficiently large contract of work on one site and, as for any mechanical plant, requires adequate preparation of the site and the programme of work to be carefully planned in advance to avoid idle time.

This type of foundation consists of a series of short concrete piles which, in the case of load-bearing wall structures, are spanned by a shallow reinforced concrete beam on which the wall is built (see fig.). Holes for the piles are bored manually or mechanically on the centre line of the beams to the required depth and diameter (see fig.). Small stones and layers of gravel present no problem but large stones must be broken up by a heavy chisel on extension rods. Larger augers cope with stones more easily than smaller ones but above 350 mm diameter the weight of the spil is too great for easy hand boring. A 250 mm diameter hole can be sunk 2.4 m in about 60 minutes, including rest periods, in soil free from stones.

In framed structures a pile or group of piles is placed under each column. In loadbearing wall structures piles are placed at the corners, at wall junctions and under stacks with further piles distributed between, sufficient to carry the imposed load, spaced as far as possible to produce uniform loading and to bring ground floor door and window openings centrally between piles.

Soil strength classification	*Diameter of pile (mm)*	*Length of pile (m)*			
		2·4	3·05	3·66	4·27
		kN	kN	kN	kN
Stiff—cannot be moulded with fingers	254	40	50	60	70
(unconfined shear strength	305	50	60	75	90
more than 72 kN/m²—see Part 2)	356	65	80	95	110
Hard—brittle or tough	254	55	65	80	90
(unconfined shear strength	305	70	85	100	115
more than 143 kN/m²—see Part 2)	356	95	110	125	140

The figures are for clay which increases in strength with depth to the 'stiff' and 'hard' classifications near the bottom of the piles. The figures should not be applied to piles in other situations.

Table 12 Permissible loads on short bored piles
Based on information in BR Digest 67 (second series)

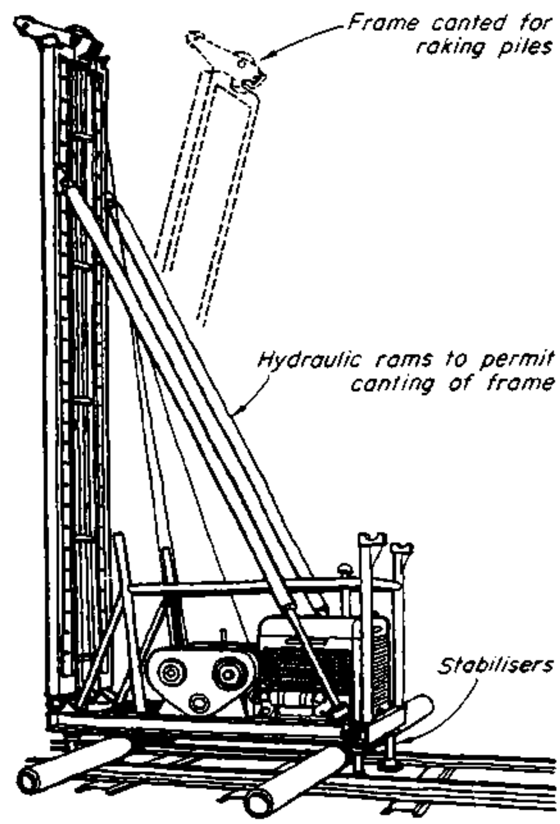

Piling frame

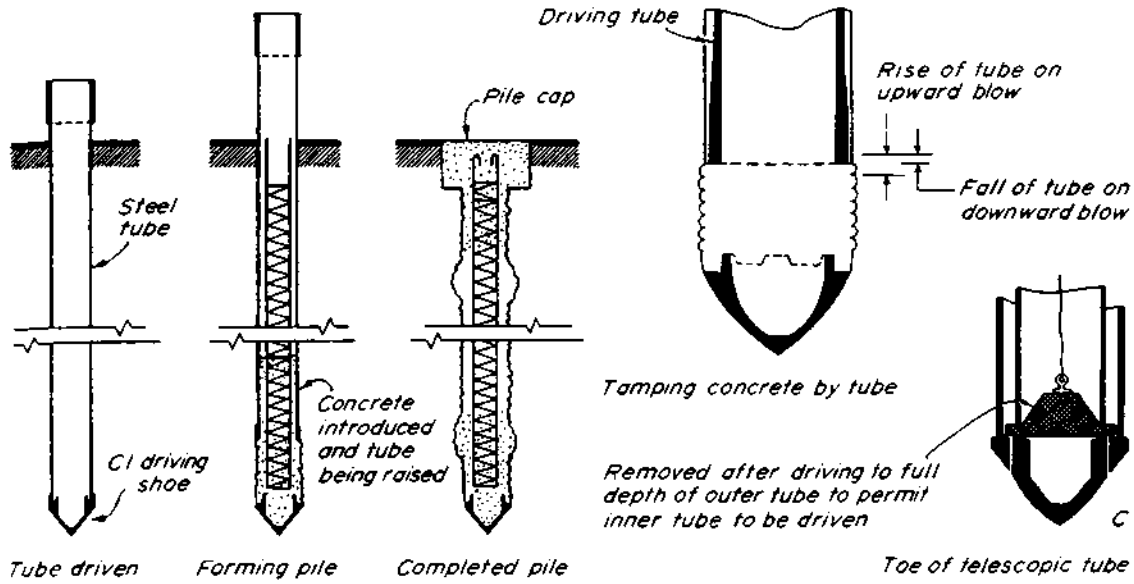

Top driven tube piles

The shallow reinforced concrete ground beams should have a depth/span ratio of 1/15 to 1/20. Reduced 'equivalent bending moments' are used in their design taking account of the fact that the brickwork on the beam tends to act with the beam and as an arch tending to concentrate the load towards the supports. Top reinforcement is placed over the pile positions to take up the negative tensile stresses at these points.

A 1:2:4 mix concrete is used for the work with a miminum water content to prevent excessive wetting and thus weakening of the clay. This is placed immediately each hole is bored, using a hopper to prevent soil entering the hole, each 305mm to 610 mm lift being thoroughly tamped. The beams are normally cast in a trench to avoid shuttering. If this is excavated before the holes are bored the concreting of piles and beams can be done simultaneously. If the beams are to be poured after the piles have set 9.5 mm diameter steel bars should be cast in the tops of the corner piles, set 610 mm in the pile and projecting 610 mm and bent over for casting in with the beams. A layer of 38 mm to 50 mm of loose ash or clinker must be placed under the beam to form a compressible layer to allow for ground movement below the beam.

Where trees exist on shrinkable clay soil closer to a building than their mature height or, in the case of groups or rows of trees, one and a half times their mature height, this type of foundation should always be used.

TOE DRIVEN TUBE PILES

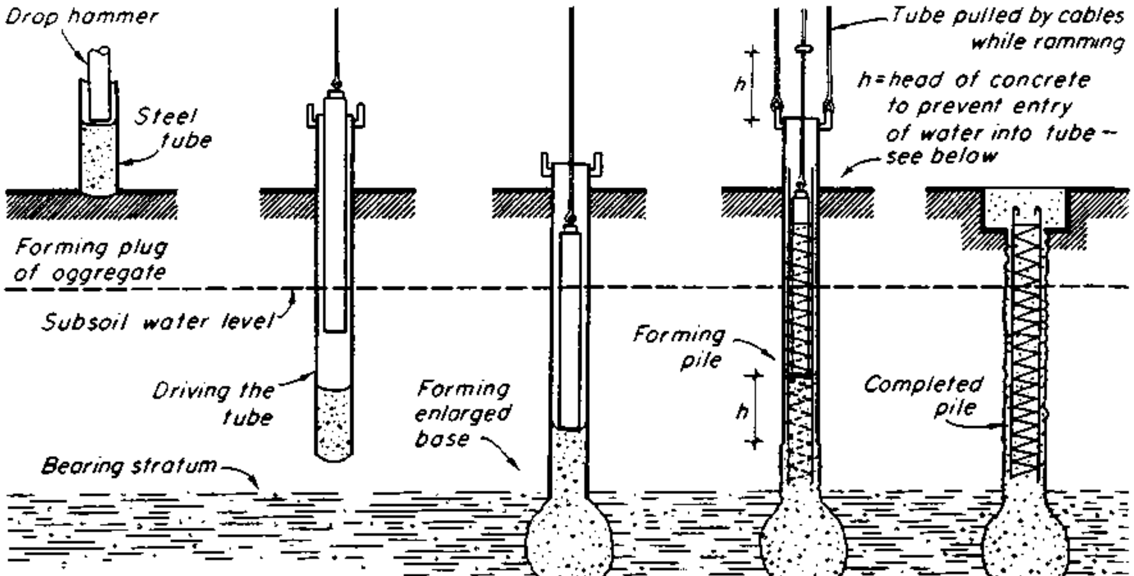

A Driving tube by drop hammer

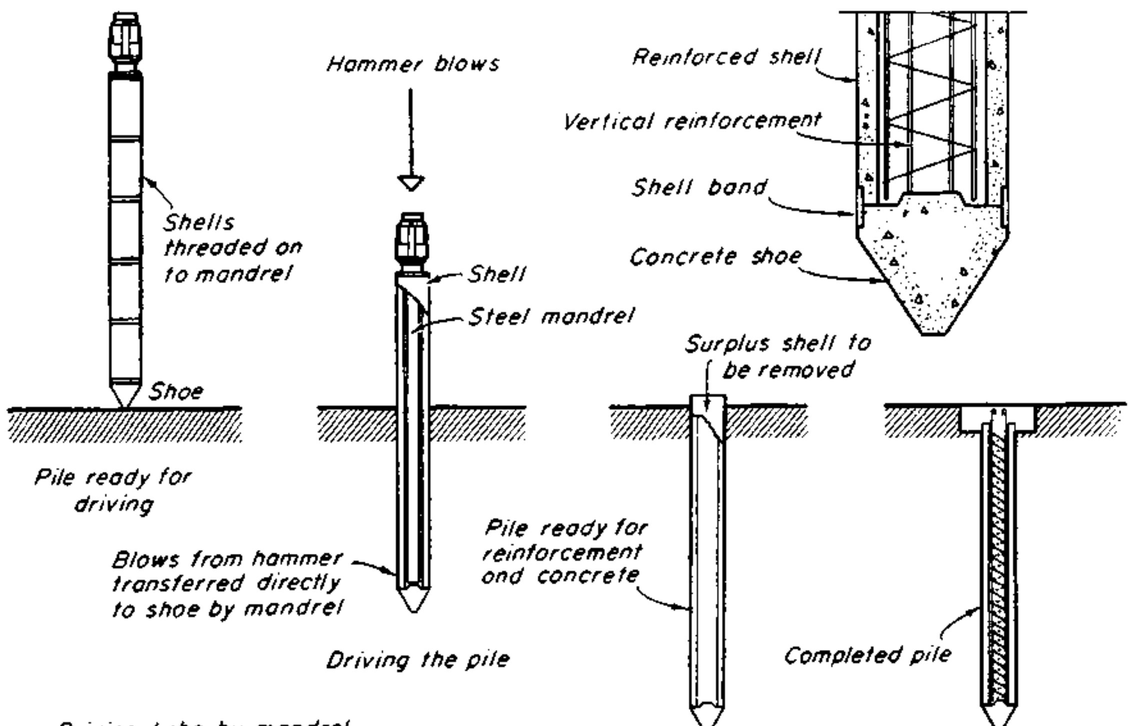

Driving tube by mandrel

BORED PILES

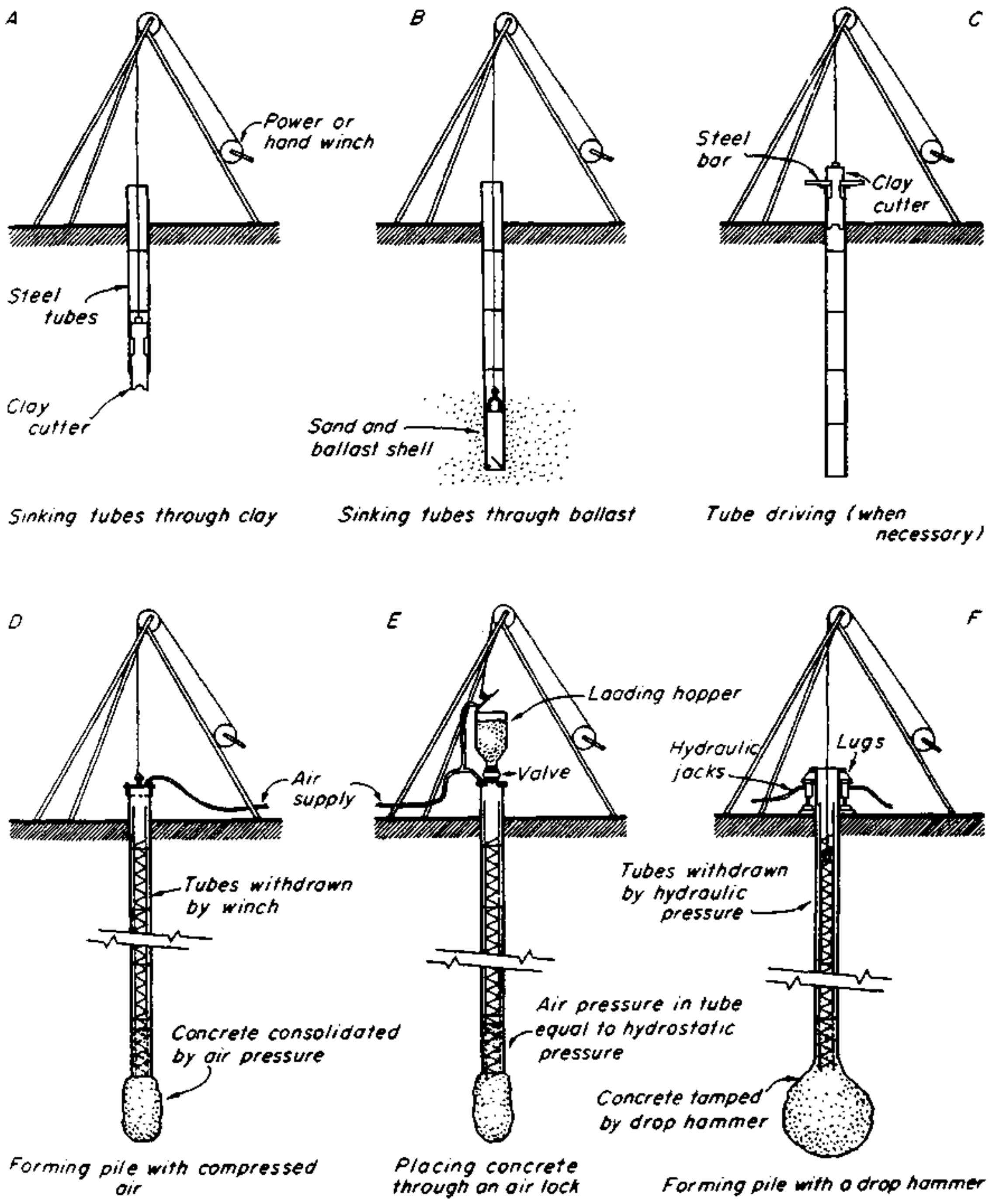
A
B
C
Power or hand winch
Steel bar
Clay cutter
Steel tubes
Clay cutter
Sand and ballast shell
Sinking tubes through clay
Sinking tubes through ballast
Tube driving (when necessary)
D
E
F
Loading hopper
Hydraulic jacks
Lugs
Valve
Air supply
Tubes withdrawn by winch
Tubes withdrawn by hydraulic pressure
Air pressure in tube equal to hydrostatic pressure
Concrete consolidated by air pressure
Concrete tamped by drop hammer
Forming pile with compressed air
Placing concrete through an air lock
Forming pile with a drop hammer

PIER FOUNDATIONS

5.3.5 Pier foundations

These are frequently used on made-up ground where ordinary strip or pad foundations will often be inadequate to prevent excessive and unequal settlement, especially when the fill is poorly compacted. They can be economic up to depths of about 3.5 m to 4.5 m and consist of piers of brick, stone or mass concrete in excavated pits taken to the firm natural ground below. They are usually square and the size is dependent on the material used and the strength of the bearing soil below, but the smallest hole in which hand excavating can be carried out is about 1 m square. The foundation size is calculated as for a column base.

When this type of foundation is used the structure is carried on reinforced concrete ground beams spanning between the piers as shown in the fig.

Piles may be used in similar conditions but will need to be reinforced and as boring is not suitable through many types of fill on made-up ground piers provide a useful alternative within the economic limits of depth given above.

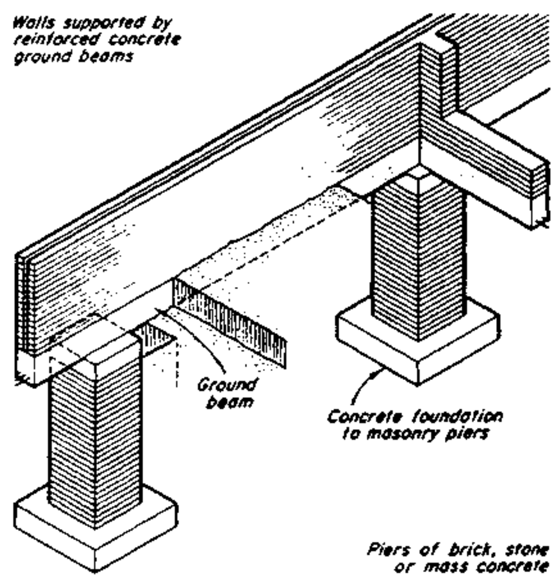

Pier foundations

•REPETITION••exercises••REPETITION•

Try to answer the following questions and use sketches for illustration

1. Foundations

   - Define the purpose of FOUNDATIONS!

2. Soil Investigations

   - When becomes SITE EXPLORATION necessary?
   - What has to be considered digging TRIAL HOLES?
   - Where are BOREHOLES used for and how are they made?
   - Write notes on soil sampeling!
   - Which tests are most important to the foundation designer and how are they carried out?
   - Describe the LOAD or BEARING TEST!
   - Write notes on SOILS and SOIL CHARACTERISTICS!
   - Classify rocks and soils into 5 groups and describe briefly the type of soil of each group as well as their max. safe-bearing capacity.
   - Explain the following terms:
     . shearing stress
     . vertical pressure
     . contact pressure
     . plastic failure

3. Excavations and Timbering
   - What do you have to consider in EXCAVATIONS and TIMBERING of trenches?

4. Types of Foundations
   - Classify the many forms of foundations
   - Which factors must be taken into account in the CHOICE OF FOUNDATIONS?
   - Write notes on
     . spread foundations
     . strip foundations
     . deep strip foundations
     . stepped foundations
     . pach foundations
     . raft foundations
     . pile foundations
     . short bored pile foundations
     . pier foundations

   and use neat sketches for illustration.

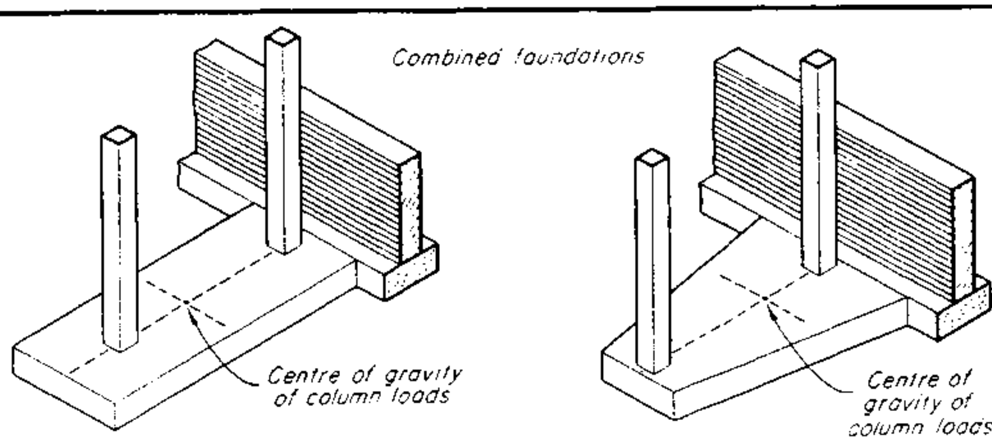

6. WALLS

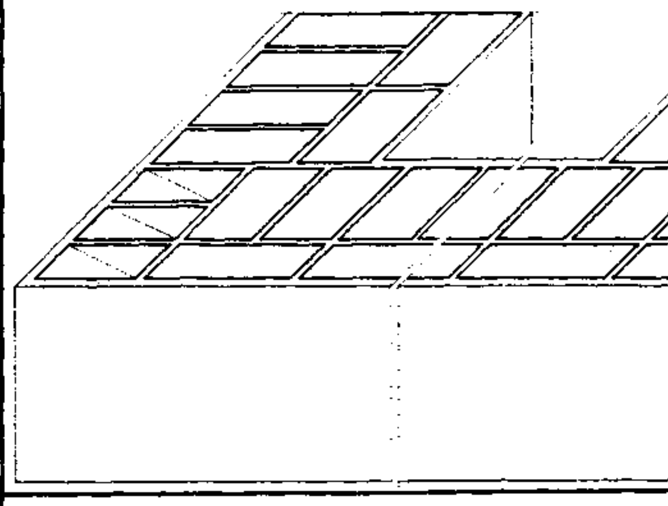

CONTENTS:

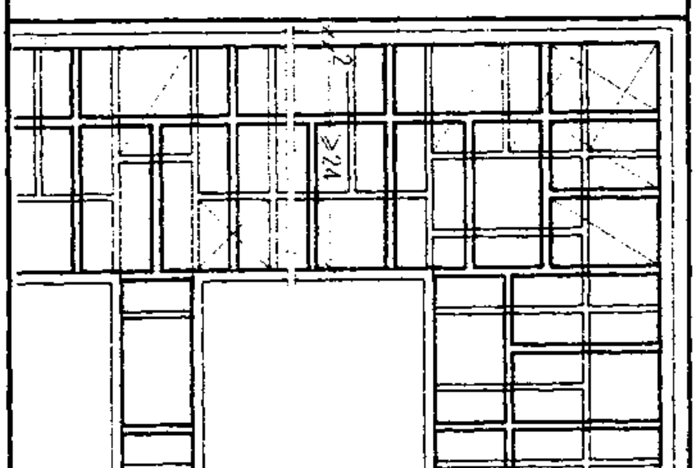

TCA TECHNICAL COLLEGE ARUSHA
CHUO CHA UFUNDI ARUSHA
CIVIL-ENGINEER DEPARTMENT

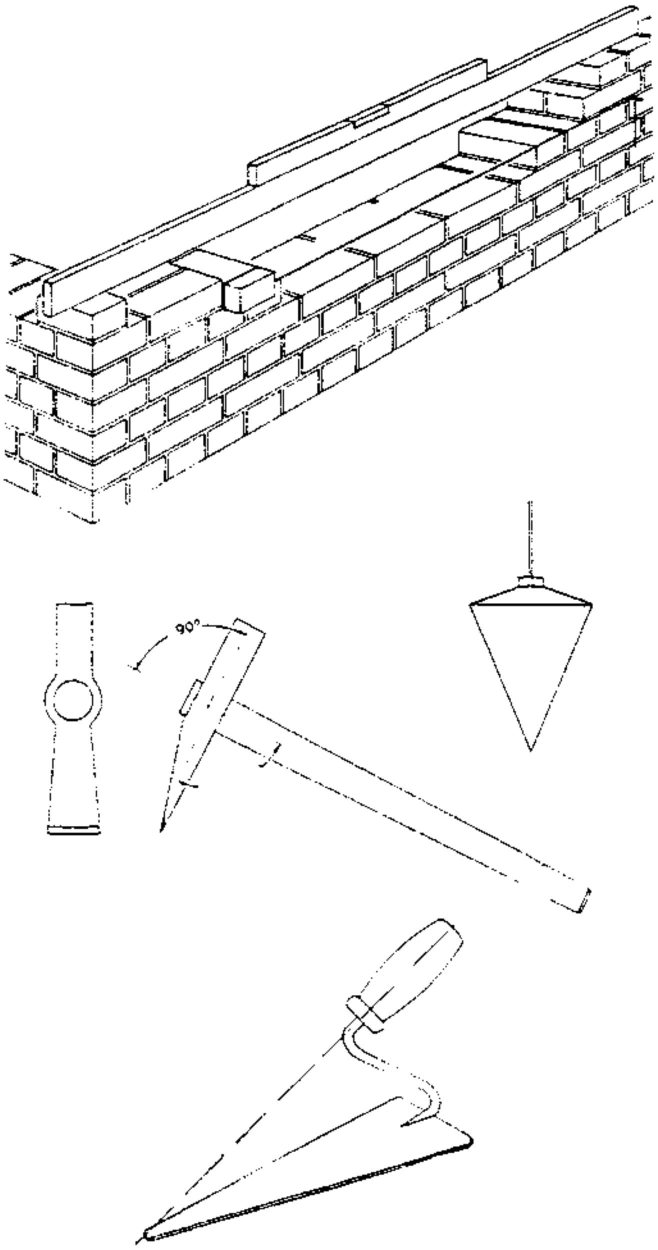

REFERENCES:

1. Jack/Stroud/Foster
   MITCHELL'S BUILDING CONSTRUCTION
   "Structure and Fabric"
   Part 1 and 2
2. Chudley
   "Construction Technology"
   Vol. 1, 2, 3
   Longman
3. R.L. Fullerton
   "Building Construction in Warm Climates"
   Vol. 1, 3.
   Oxford
4. R. Barry
   "The Construction of Buildings"
   Vol. 1, 3rd Edition
5. J.K. Mc.Kay
   "Building Construction-Metric"
   Vol. 1 and 4
6. W.G. Nash
   "Brickwork 1 and 2"
7. Ns. Whyle and Vincent Powell-Smith
   "The Building Regulations"
   5th Edition
8. E. Neufert
   "Architect's Data."

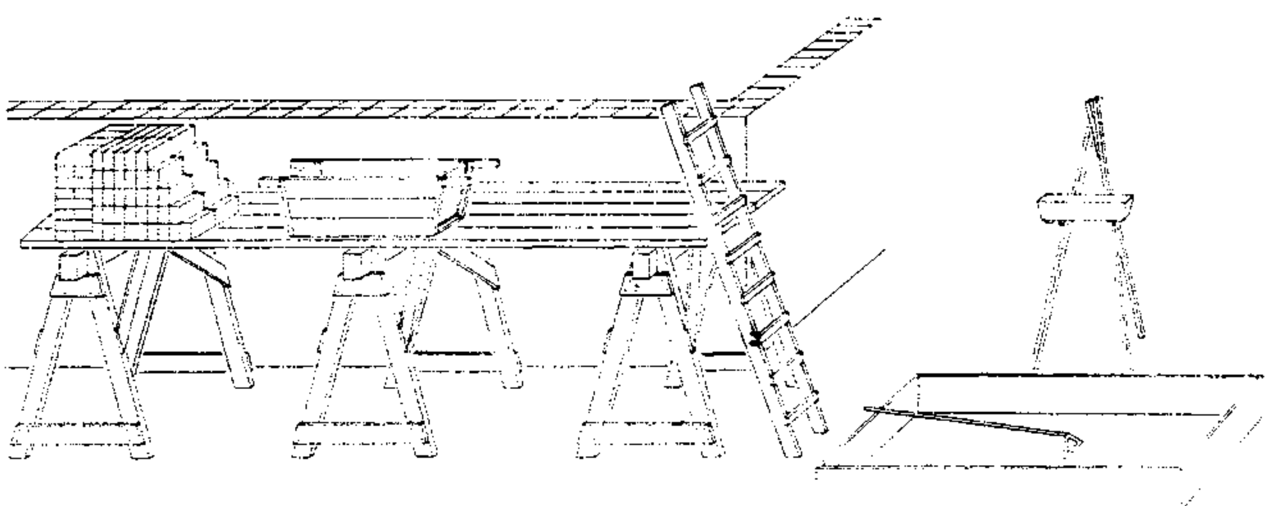

6. WALLS		BUILDING CONSTR.
compiled: D.VOLKE		— LECTURE —
JULY '80		CET 3031/1 6 01

6. WALLS

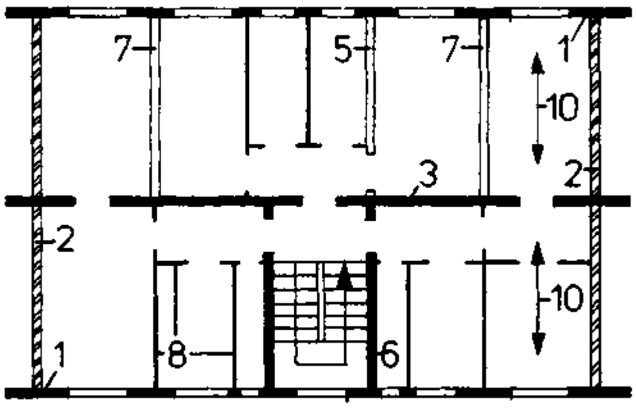

1 EXTERNAL WALL ; load bearing
2 PARTY WALL ; fire proof
3 INTERNAL WALL ; load bearing
4 CROSS WALL ; load bearing
5 CROSS WALL ; stiffening
6 STAIRCASE WALL
7 PARTY WALL
8 PARTITION WALL
9 EXTERNAL WALL ; non load bearing
10 DIRECTION OF SPAN of the floor

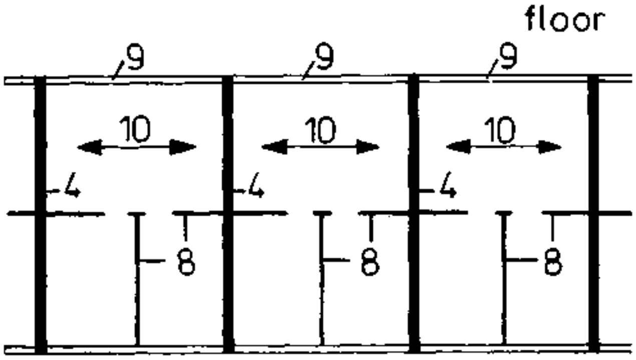

6. Walls

6.1 Function and Properties of Walls

- Walls are the vertical ele - ments of a building

- They have to fulfill two func- tions:
  (1): Loadbearing
  (2): space enclosing and di- viding

- There are certain requirements which a wall must satisfy:
  Adequate - strength and stability
  - weather resistance
  - thermal insulation
  - fire resistance

  (these functional requirements are not given in order of im - portance, since this will vary with the main function of the wall).

- STRENGTH and STABILITY:
  The strength of a wall is mea- sured in terms of its resistance to the stresses set up in it
  o by its own weight
  o by superimposed loads and
  o by lateral forces (such as wind)
  Its stability in terms of its resistance to overturning
  o by lateral forces and
  o by buckling caused by excessive slender- ness.

The Building Regulations (which lay down requirements for the cal- culation of wall thicknesses) provide means for determining thicknesses other than by calcu- lating.

The Table below gives
RULES FOR DETERMINING THE THICK- NESS OF BRICK AND BLOCK WALLS (NON-CALCULATED)

TABLE 19 RULES FOR DETERMINING THE THICKNESS OF BRICK AND BLOCK WALLS (NON-CALCULATED WALLS)

Rule Number	Type of Wall	Building of which Wall Forms a Part	Height of Wall	Length of Wall	Minimum Thickness of Wall	Additional Requirements as to Thickness and Construction of Wall
1	Certain external walls and and separating walls not exceeding 12 m high	1. Single storey 2. Two storeys or more if the imposed load on each floor is less than 3 kN/m²	Not exceeding 3.6 m	Any length	200 mm for the whole height	(i) Subject to Rules 4 to 8 below the thickness of these walls shall be as in adjoining column. (ii) In addition the thickness of the wall, in any storey, for not less than one-quarter of its length, shall not be less than one-sixteenth of the height of that storey.
			Exceeding 3.6 m but not exceeding 9 m	Not exceeding 9 m	200 mm for the whole height	
				Exceeding 9 m	300 mm from the base for the height of one storey and 200 mm for the rest of its height	
			Exceeding 9 m but not exceeding 12 m	Not exceeding 9 m	Ditto	
				Exceeding 9 m	300 mm from the base for the height of two storeys and 200 mm for the rest of its height	
2	Certain other and external walls and separating walls not exceeding 12 m high	Other than those in Rule 1	Not exceeding 7.5 m	Unlimited	Subject to Rules 4, 5, 7 and 8, the thickness must be not less than 300 mm (200 mm for the top storey)	(i) In addition (*a*) the thickness of the wall between the base and 5 m below the top shall not be less than the thickness which would be obtained if the wall were to be built solidly throughout the space between straight lines drawn on each side joining the thickness at the base to the thickness at 5 m below the top. (*b*) The thickness of the wall in any storey for not less than one-quarter of its length to be not less than one-fourteenth of the storey height. (*c*) No offsets allowed in the wall except at the level of lateral supports.
			Exceeding 7.5 m but not exceeding 9 m	13.5 m		
			Exceeding 9 m but not exceeding 12.2 m	10.5 m		
3	Certain internal load-bearing walls (excluding a separating wall)	Any building other than a house of one or two storeys	Heights in Rule 1 or 2 (as the case may be) with lengths twice those in Rule 1 or 2 (as the case may be)		Half the thicknesses in Rule 1 or 2 (as the case may be)	
4	Certain external walls and separating walls of pier construction	Any	Heights and lengths in Rule 1 or 2 (as the case may be)		Subject to Rule 6, if the wall has piers distributed throughout its length and a pier at each end, the mean thickness of the wall (the plan area of the wall divided by its length) shall be not less than the thickness required by Rules 1 or 2 (as the case may be) and the thickness of the wall between the piers shall not be less than 200 mm.	
5	Cavity walls. *Ties placed 900 mm apart horizontally and 450 mm vertically, with an additional tie every 300 mm height at jambs to openings. Cavity not less than 50 mm or more than 75 mm wide.*	Any	Heights and lengths in Rule 1 or 2 (as the case may be)		Leaves to be not less than 100 mm thick. The overall wall thickness shall be not less than (i) 250 mm, or that required for a solid wall by Rules 1 or 2 (as the case may be) increased by the cavity width, *whichever is the greater.* Note that the *inner* leaf may be not less than 75 mm thick if: (*a*) the wall is of a single storey house or the upper storey of a two-storey house; and (*b*) the leaf is not more than 8 m long and 3 m high (5 m for a gable); and (*c*) the wall is built with mortar not weaker than 1 : 2 : 9; and (*d*) the number of ties given in column 2 is doubled; and (*e*) the roof load is supported by the outer leaf.	
6	External walls of certain small buildings and annexes	1. Single storey building other than a house if its width, measured in the direction of the roof span is not more than 9 m	Not exceeding 3 m	Any length	The walls may be not less than 100 mm thick provided: (i) it is bonded at each end and intermediately with piers or buttresses which are not less than 200 mm square on plan (including the wall thickness), or of such greater size as may be needed for stability, and so placed that the wall is divided into lengths not exceeding 3 m; and (ii) the wall is built with mortar not weaker than 1 : 1 : 6; and (iii) the wall is not subjected to any load other than the distributed load of the roof of the building or annexe of which it forms a part and is not subject to lateral thrust from such roof.	
		2. An annexe not more than 3 m high (*e.g.*, verandah, garage, tool shed, lavatory, etc.) attached to a house	Not exceeding 3 m	Any length		
7	Bays and gables over bay windows	Any	Rules 1 and 2 shall not apply to any part of an external wall which forms a bay for a bay window; and is above the level of the sill of the lowest window opening in such bay; and built with mortar not weaker than 1 : 2 : 9.			
8	Parapets	Any	Not to exceed six times the thickness	Any	Not less than 200 mm or that of the wall on which it is carried (whichever is the less)	

NOTES

Openings. The number and size of these shall not be such as to impair the stability of the wall. (It is considered that the maximum of window lengths in a wall is three-quarters of the wall length.)

Chases. Vertical chases to be not deeper than one-third of the wall thickness (one-third of the leaf thickness in cavity walls). Horizontal chases to be not deeper than one-sixth of the wall thickness (one-sixth of the leaf thickness in cavity walls).

RAIN

- WEATHER RESISTANCE:
  The external walls of a building are required to provide adequate resistance to rain and wind penetration.

The actual degree of resistance will depend
- upon the height of the wall and
- upon the locality and exposure.

- Wind penetration to walls rarely presents difficulties in solid wall construction only with some types of modern walling of dry construction (consisting of external cladding or sheathing and dry internal linings on some form of frame) problems may arise.

- Wind has considerable influence on rain penetration, forcing the water through pors and cracks which otherwise it might not penetrate (especially on high buildings).

WIND

- Rain penetration through walls can be resisted in three ways:

  (1) by ensuring a limited penetration only into the wall thickness
  (2) by preventing any penetration through the outer surface
  (3) by interupting the capillary paths through the wall.

  o In the first the water will be absorbed by a premeable walling material and held as in a sponge, near the outer surface until dry weather conditions, permit it to evaporate

  o In the second the use of an impermeable walling material (or facing) will force the water to run down the wall face without entering the wall thickness
    - (Both methods present difficulties)-

  o The alternative to either the first or the second is the third method:
    The breaking of the capillary paths by the use of a solid wall structure in which no capillary path exist such as:

RAIN

- no-fines concrete (composed of cement and coarsed aggregate alone, the fine aggregate being omitted) or
- by the provision of an outer surface which is isolated from the inner surface by a continous gap or cavity. The outer surface or skin may be non - load bearing (i.e. tile hanging or large suspended cladding panels, or load bearing as in cavity wall construction)
- In addition to protection against lateral penetration of rain a wall must be protected at his base against ground moisture, in form of horizontal and vertical damp - proof. barries. Protection may be also necessary against the entry of subsoil water under pressure through basement walls.

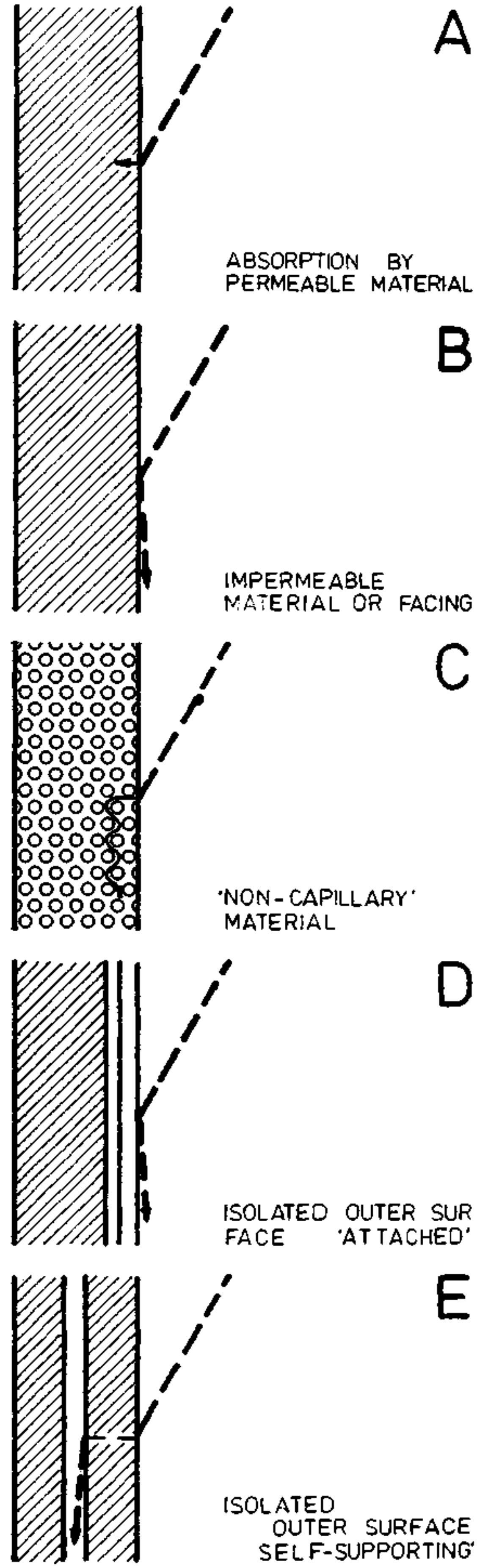

FIRE

BS 476
PART 8 1972

- FIRE RESISTANCE:
  According to the Building Regulations chapter 5:
  'FIRE RESISTANCE of an element of structure, a door, or other part of a building means the period of time for which a specimen construction (of the same specification as the particular element, door, etc.) would satisfy the requirements of the test by fire to BS 476 : Part 8 1972 in respect of
  a) stability
  b) integrity and
  c) insulation'

  The term fire resistance is a relative term applied to elements of structure and not of material. It is not to be confused with non-combustibility.

THERMAL INSULATION

- THERMAL INSULATION:
  The external walls of a building, together with the roof must provide a barrier to the passage of heat in order to maintain satisfactory internal conditions without the wasteful use of an air conditioning system.
  Adequate thermal insulation depends mainly on the locality where the building will be erected. (At the coast region other provisions have to be introduced than in regions like Arusha, Iringa or Mbeya.)
  . Heat trnsmission values for various forms of construction are given in special handbooks (i.e. Mitchel Building Construction: Enviroment and Services) where the principles of thermal insulation are fully discussed.

WALL under LOAD

6.2 The Behavior of the WALL under load

- Under vertical loading, a wall may
  - o crush
  - o buckle or
  - o settle.

-crushing
-buckling
-settling

- CRUSHING:
Is caused by over-stressing the material of which the wall is constructed. This is avoided by adequate thickness at all points to keep the stresses in the wall within the safe compressive strength of the materials.

Eccentric loading (that is loading applied not through the centre of gravity of the wall) has the effect of increasing the compressive stress in the wall on the loaded side and of decreasing it on the unloaded side and tends to cause bending in the wall whatever its thickness.

The reason:
A moment is set up in the wall and to maintain equilibrium this must be resisted by an opposite moment within the wall (the forces for which must be provided by the walling material itself.)

This causes COMPRESSION on one side of the axis of the wall and TENSION on the other

The result of this can be twofold:

1 the increased compressive stress could become greater than the safe compressive strength of the walling material.

2 if the eccentricity is too great tensile stresses will be set up in the side opposite that on which the load is applied.

Fig. indicates the increasing compressive stress and the development of tensile stress with increasing eccentricity of load.

In practice the actual stresses in the wall are determined by the formula

$$\frac{W}{A} \pm \frac{We}{Z}$$

Where $\frac{W}{A}$ = stress due to the load applied axially

We = moment caused by eccentric loading

Z = a geometrical property relating to the shape and size of the crossection of the wall such that

$\frac{We}{Z}$ = stress at the faces of the wall due to eccentric loading.

Z: Methods for computing this for any given section are given in standard textbooks on the theory of structures.

- tension will occur when the eccentricity is greater than 1/6 of the wall thickness.

- when the stress due to eccentric loading are too great they are reduced either by reducing the eccentricity or by increasing the thickness of the wall.

The last has the double effect of reducing the relative eccentricity and of increasing the value of Z.

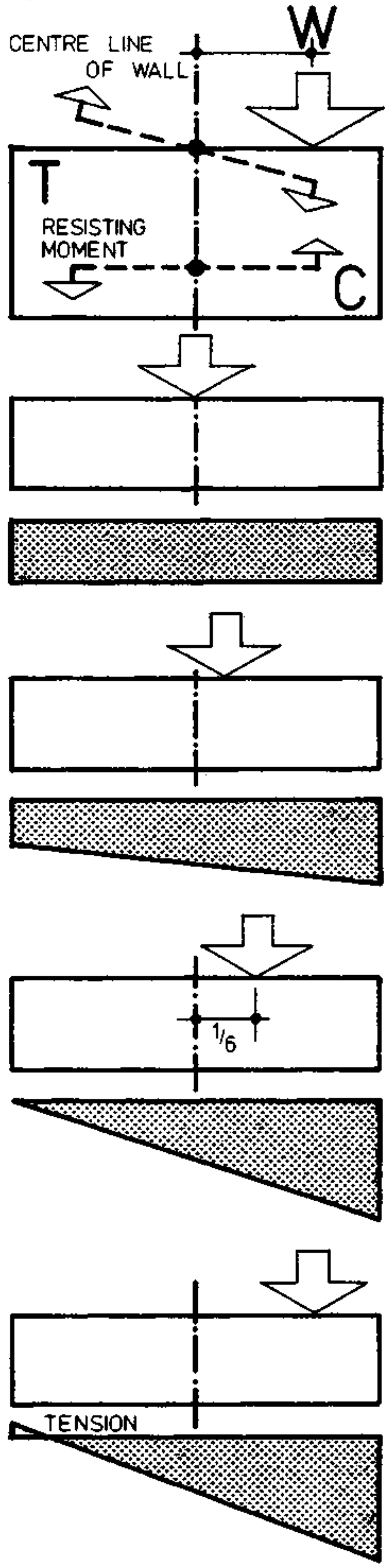

- BUCKLING
  Will accur when the thickness of the wall is small relative to its height. Short walls or piers ultitately fail by crushing, but as the height increases they tend to fail under decreasing loads by buckling.

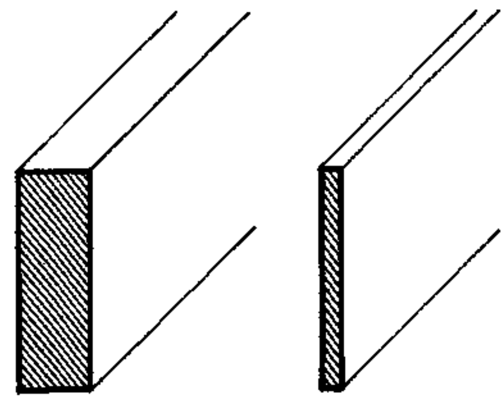

The terms "SHORT and TALL' in this context are relative to the thickness of the wall not to its actual height. They are defined in terms of the ratio of unsupported height to horizontal thickness known as

SLENDERNESS RATIO

The greater this is the tendency to buckle. Buckling is not related to the <u>strength of the walling material</u> but to the <u>stiffness of the wall</u>.

Buckling may be controlled either by
- o restricting height,
- o increasing thickness
- o stiffening by buttresses
- o intersecting walls or by
- o reducing the applied load.

- SETTLEMENT
  The downward force of a wall must be resisted by an equal, upward reaction from the soil on which it rests in order to maintain equilibrium.

  Soils vary in strength (some, verging on rock, are very strong, other are relatively weak).

  All of these consolidate under-load but rock can resist very high stresses with little consolidation while the same stresses would cause excessive consolidations in others.

  This consolidation causes a vertical downward movement of the wall which is known as SETTLEMENT.

SETTLEMENTS OF WALLS

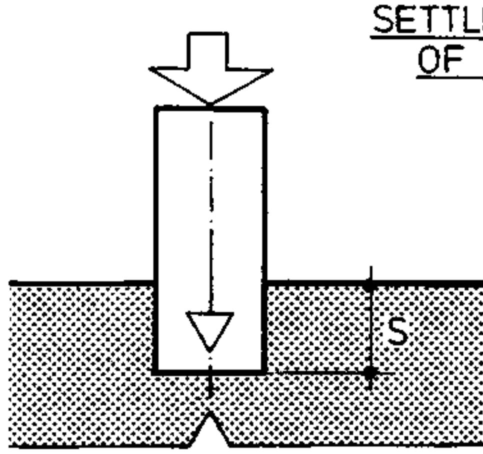

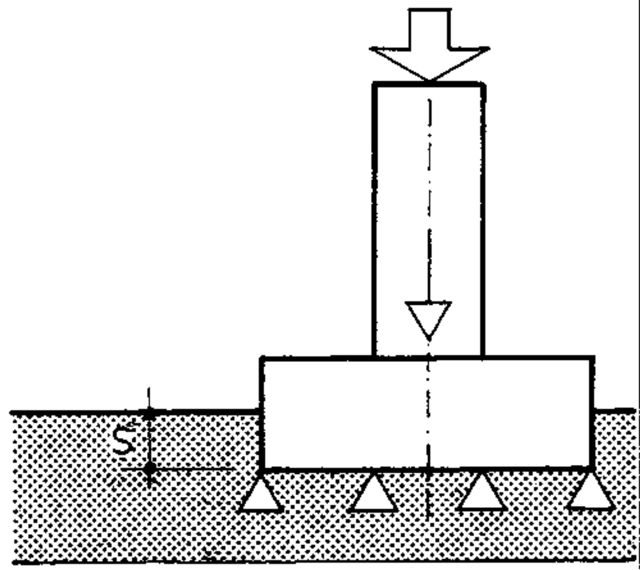

In order to keep the settlement within acceptable limits, the base of the wall has to be made of such a size that the load is distributed over a sufficiently large area of soil.

- Under horizontal loading a wall may
  - o slide or
  - o overturn

- SLIDING
  Occurs more likely in a free-standing wall than in a wall forming part of a building.

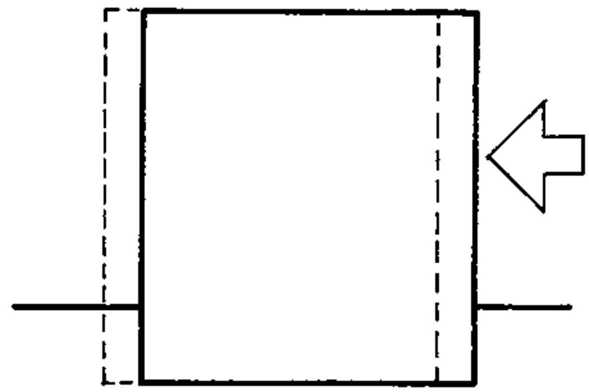

SLIDING

<u>Friction</u> and the <u>passive pressure of the soil</u> on which the wall rests are utilized to prevent sliding action.

The amount of friction (or the frictional resistance) depends upon the weight exerted on the soil. That is the pressure between the two surfaces, and upon the degree of smoothness of the surfaces

The ratio of frictional resistance to weight is constant.

The ratio is termed COEFFICIENT OF FRICTION and varies according to the types of surface in contact.

Therefore:

Frictional resistance = coefficient of friction x weight.

The other force which may resist the tendency of the wall to slide is the passive pressure of the soil.

The stresses in the soil caused by this pressure must be kept within the safe limits of the particular soil by taking the wall deeper into the soil (so that the pressure is distributed over a greater area.

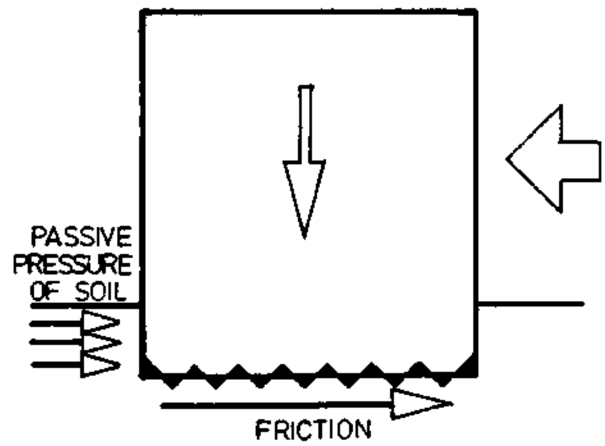

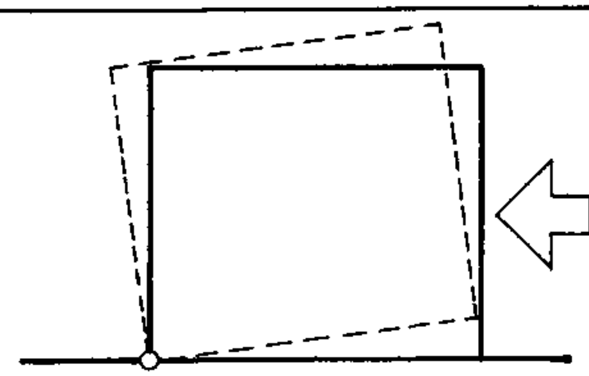

OVERTURNING

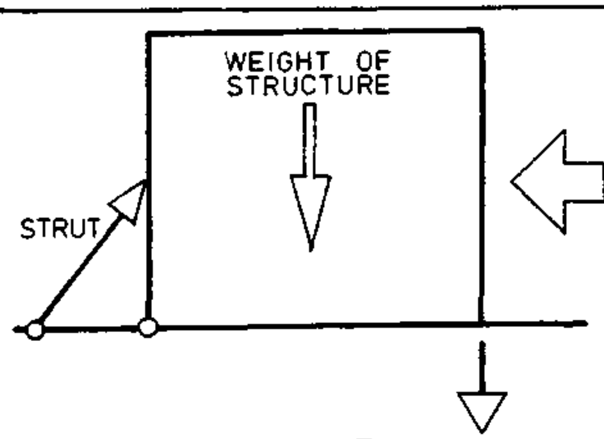

TENSION ELEMENT

- OVERTURNING
  may be caused by

  1 rotation or
  2 settlement.

Overturning by rotation occurs when the counter-moment We set up by the weight of the wall acting through its centre of gravity is too small to resist the moment Fe set up by the overturning force.

In these circumstances the resultant of the weight of the wall W and the overturning force F falls outside the base of the wall so that the base is wholly under tension and overturning occurs.

To prevent this:
The weight of the wall can be increased by increasing

its height
or thickness.

The latter is most beneficial because it also increases the width of the base within which the resultant must fall.

Alternatively (or in addition) the shape of the wall may be made trapezoidal to shift its centre of gravity relative to the base towards the overturning force thus reducing the eccentricity of the resultant at the base.

Another alternative is to use Buttresses

These methods are adopted for walls having little tensile strength. Alternative and (in case of tall walls) more ecconomic methods may be adopted when materials with adequate tensile strength are used, such as reinforced concrete.

The use of a strut to prevent rotation may be adopted and where a wall undergoing a lateral force forms part of a building a floor can often be made to function as a strut.

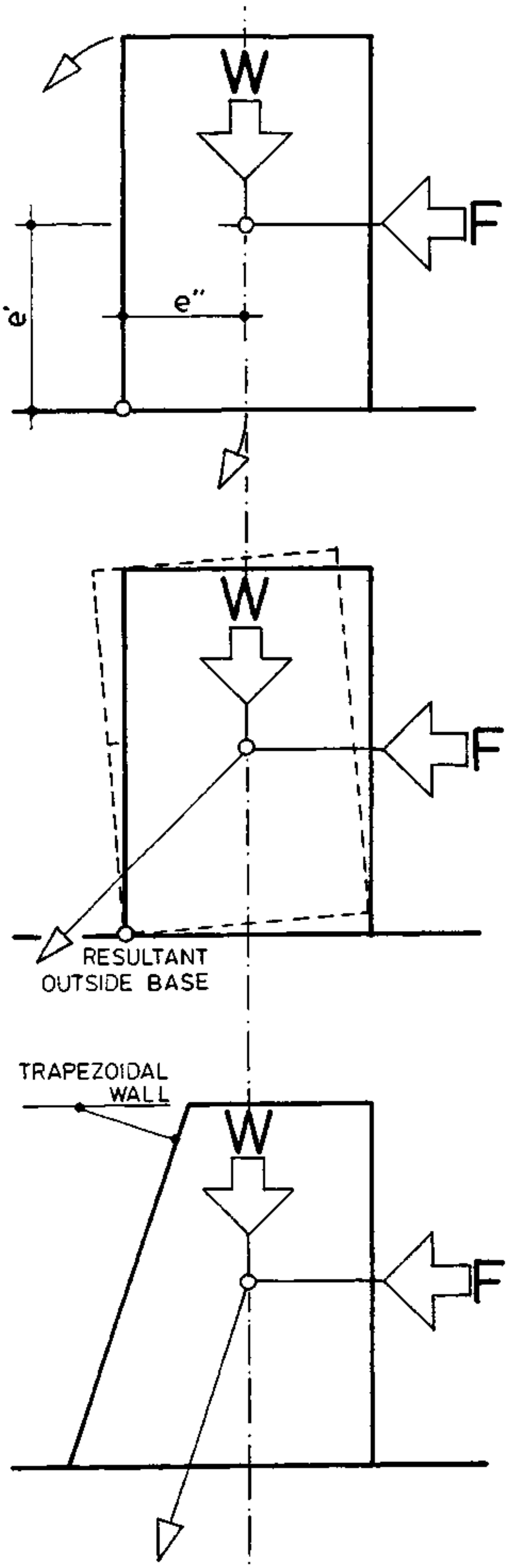

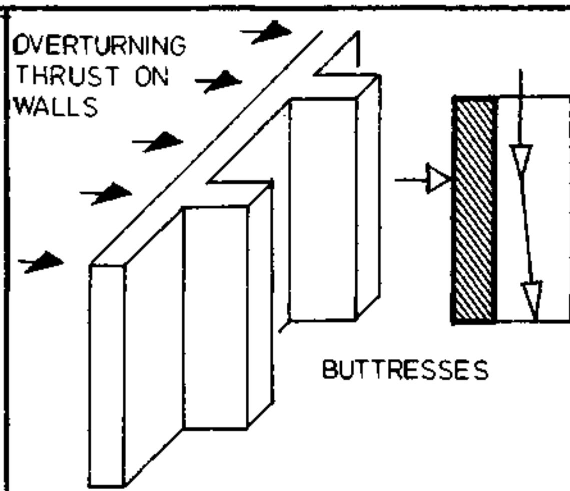

STABELISING of WALLS

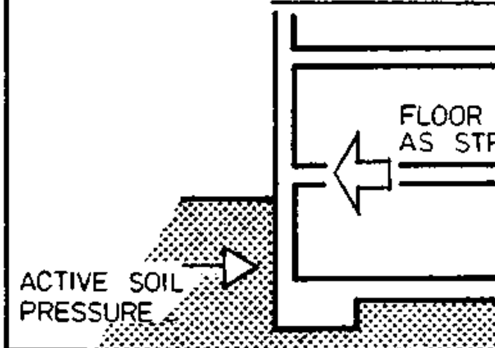

- OVERTURNING due to SETTLEMENT: may occur though overstressing of the soil causing excessive consolidation under the wall and the overturning force will always cause excentric pressure at the base of the wall leading to simular stress distributions to those in an eccentrically loaded wall.

  This will result in a distribution of pressure in the soil with a pressure at the toe which might be considerably greater than the average pressure.

  If this overstresses the soil, excessive consolidation might occur at this point causing overturning through unequal settlement of the wall.

  This problem can be overcome by reducing the eccentricity of the resultant
  - o by increasing the thickness of the wall or
  - o by increasing the width of its foundation, or
  - o by making the wall trapezoidal in shape.

OVERTURNING of WALLS : settlement

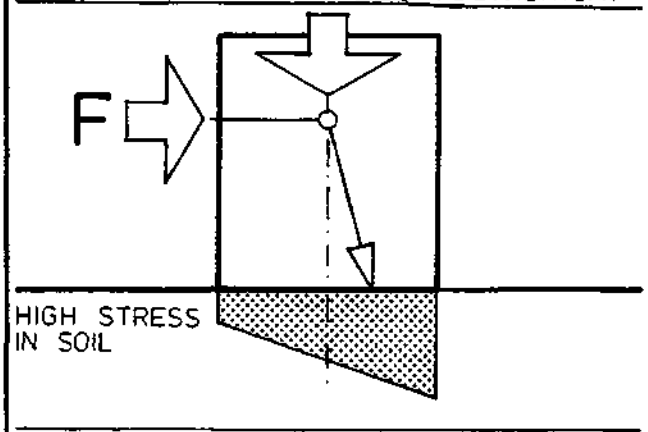

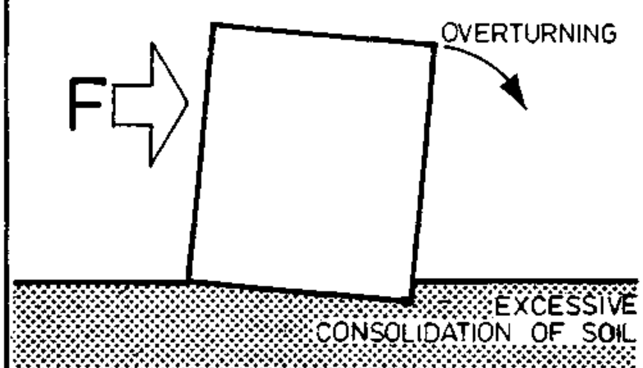

CALCULATION of WALL THICKNESS

Calculation of wall thickness:

For determining the thickness of walls and piers certain terms have to be defined in relation to this.

SLENDERNESS RATIO

- SLENDERNESS RATIO = the ratio of effective height to effective thickness. (But in the case of walls it may be based alternatively on the effective length. if this is less than the effective height. This takes account of the stability which is provided by vertical as well as by horizontal lateral supports

EFFECTIVE HEIGHT

- EFFECTIVE HEIGHT = is based on the distance between adequate lateral supports provided by floors and roof and depends upon the degree of support they are assumed to provide. The greater the degree of support the smaller is the proportion of the distance between centres of support taken as the effective height. This is illustrated in the figures A to C in respect of walls and D, E in respect of columns.

  Columns must be considered about both axes. If lateral support is provided in one direction only, as indicated by the beam in (D), the effective height relative to that direction will be as shown, but in the other direction it must be twice its height above the lower support. In the absence of any top support (E) the latter value must be taken relative to both directions.

  Where the wall between two openings constitutes a column as in (F) its effective height is based upon the height of the taller of the openings, Z. Where Z does not exceed H/2 the effective height is 1 1/2Z. Where Z exceeds H/2 it must be taken as 1 1/2 Z or H, whichever is the less.

CALCULATED WALLS

- EFFECTIVE HEIGHT
- EFFECTIVE LENGTH

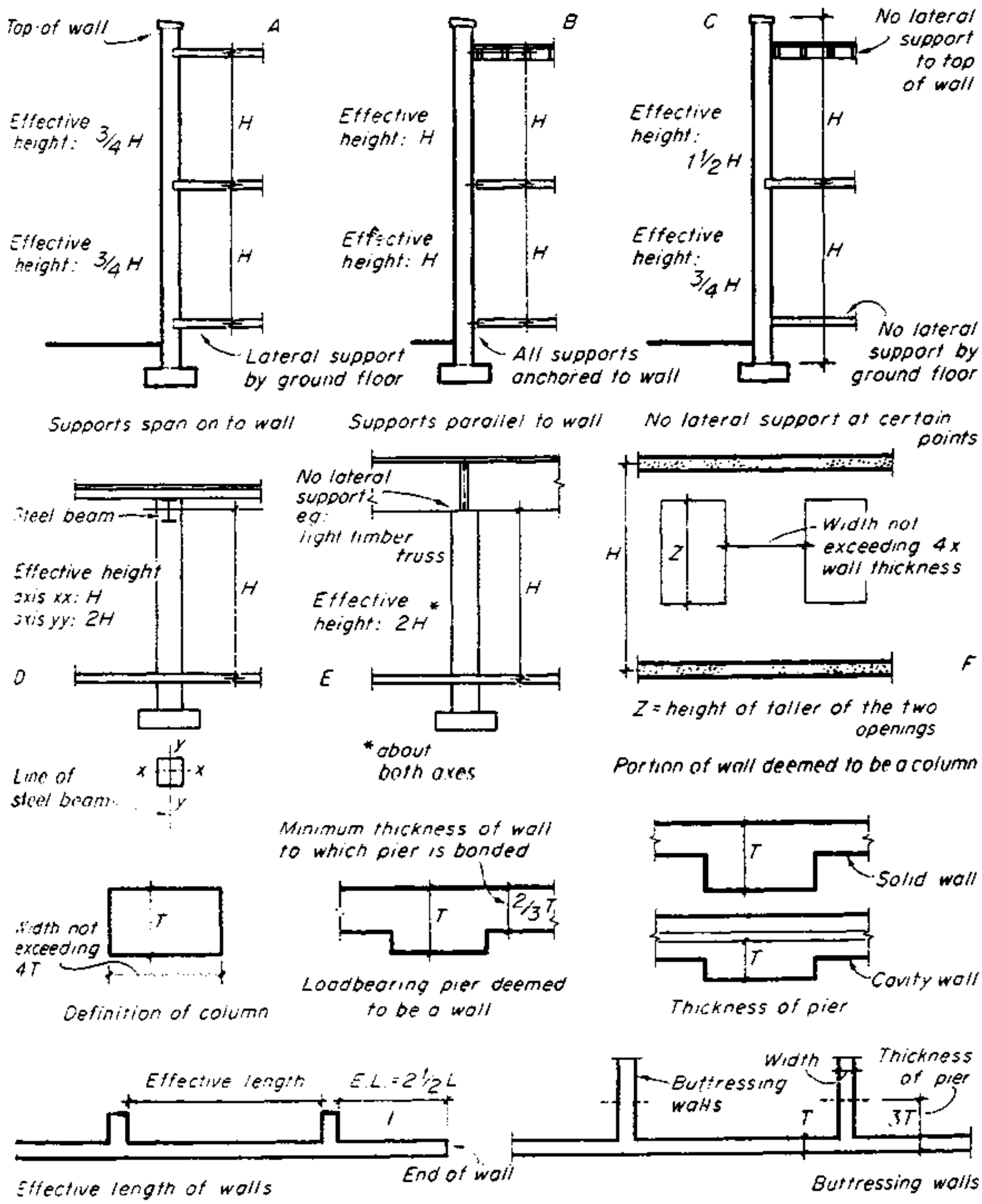

6. WALLS compiled: D.VOLKE JULY '80	CALCULATED WALLS	BUILDING CONSTR. — LECTURE — CET 3031/1 6.2 14

EFFECTIVE LENGTH =

EFFECTIVE LENGTH = This is the distance between adjacent piers, buttresses or intersecting or return walls. The effective length of the end of a wall with no end stiffening is shown in the figure.

EFFECTIVE THICKNESS = This is the actual thickness of a solid wall excluding plaster, rendering, or any other applied finish or covering. Allowance is made for any stiffening piers which may be bonded to the wall by multiplying the actual thickness by a factor which varies with the size and spacing of the piers, resulting in an effective thickness greater than the actual thickness. Table 1 gives these factors. (Buttressing or intersecting walls may be considered as pier of width equal to the thickness of theintersecting wall and of a thickness equal to three times the thickness of the stiffened wall (figure).

If a column has no lateral support or has support in both directions the effective thickness will be based on the least dimensions, and the larger be adopted.

The maximum values for the slenderness ratio of masonary walls are shown in table 2

In many buildings where loading is light and the necessary wall thickness is small the slenderness ratio becomes the controlling factor, limiting as it does the height for any given thickness.

Thickness of pier / *Thickness of wall*	*Pier spacing* / *Width of pier* 6	8	10	15	20
1.0	1.0	1.0	1.0	1.0	1.0
1.5	1.2	1.15	1.1	1.05	1.0
2.0	1.4	1.3	1.2	1.1	1.0
2.5	1.7	1.5	1.3	1.15	1.0
3.0	2.0	1.7	1.4	1.2	1.0

Table 1. *Determination of effective thickness of wall stiffened by piers*

EFFECTIVE THICKNESS

SLENDERNESS RATIOS

Type of wall	*Maximum slenderness ratio*
Unreinforced brickwork or blockwork set in hydraulic lime mortar	13
ditto in buildings not exceeding two storeys	20
Brickwork or blockwork set in other than hydraulic lime mortar	27
ditto in walls less than 90 mm thick in buildings of more than two storeys	20

Table 2 *Maximum permitted slenderness ratios*

PERMISSIBLE STRESS

PEMISSIBLE STRESS = The stresses permitted in a wall or column are regulated according to the strength of the bricks or blocks, the type of mortar to be used and the slenderness ratio of the wall or column. Basic stresses, arising from combined uniformly distributed dead and superimposed loads and rebted to the strength of the units and the type of mortar used, are shown in table 3.

Table 3 *Basic stresses for masonry walls*

Description of mortar	*Mix (parts by volume)* Cement	Lime	Sand	*Hardening time after completion of work†*
Cement	1 1	0-¼* ½	3 4½	days 7 14
Cement-lime Cement with plasticizer § Masonry cement‖	1 1 –	1 – –	6 6 –	14
Cement-lime Cement with plasticizer § Masonry cement‖	1 1 –	2 – –	9 8 –	14
Cement-lime	1	3	12	14
Hydraulic lime	–	1	2	14
Non-hydraulic	–	1	3	28 ¶

Basic stress in MN/m^2 corresponding to units whose crushing strength (in MN/m^2) ‡ is:

Description of mortar	*Brickwork members* 2.8	7.0	10.5	20.5	27.5	34.5	52.0	69.0	96.5 or greater
Cement	0.28 0.28	0.70 0.70	1.05 0.95	1.65 1.45	2.05 1.70	2.50 2.05	3.50 2.80	4.55 3.60	5.85 4.50
Cement-lime / Cement with plasticizer § / Masonry cement‖ (1:1:6)	0.28	0.70	0.95	1.30	1.60	1.85	2.50	3.10	3.80
Cement-lime / Cement with plasticizer § / Masonry cement‖ (1:2:9)	0.28	0.55	0.85	1.15	1.45	1.65	2.05	2.50	3.10
Cement-lime	0.21	0.49	0.70	0.95	1.15	1.40	1.70	2.05	2.40
Hydraulic lime	0.21	0.49	0.70	0.95	1.15	1.40	1.70	2.05	2.40
Non-hydraulic	0.21	0.42	0.55	0.70	0.75	0.85	1.05	1.15	1.40

Description of mortar	*Blockwork members* 2.8	3.5	7.0	10.5	14.0	21.0	28.0	35.0	52.0
Cement	0.28 0.28	0.35 0.35	0.70 0.70	1.05 0.95	1.25 1.15	1.70 1.45	2.10 1.75	2.50 2.10	3.50 2.80
Cement-lime / Cement with plasticizer § / Masonry cement‖ (1:1:6)	0.28	0.35	0.70	0.95	1.10	1.35	1.60	1.90	2.50
Cement-lime / Cement with plasticizer § / Masonry cement‖ (1:2:9)	0.28	0.35	0.55	0.85	1.00	1.20	1.45	1.70	2.05
Cement-lime	0.21	0.23	0.49	0.70	0.80	1.00	1.20	1.40	1.70
Hydraulic lime	0.21	0.23	0.49	0.70	0.80	1.00	1.20	1.40	1.70
Non-hydraulic	0.21	0.23	0.42	0.55	0.60	0.70	0.75	0.85	1.05

* The inclusion of lime in cement mortars is optional

† These periods should be increased by the full amount of any time during which the air temperature remains below 4.4°C plus half the amount of any time during which the temperature is between 4.4°C and 10°C

‡ Linear interpolation is permissible for units whose crushing strengths are intermediate between those given in the table

§ Plasticizers must be used according to manufacturers' instructions

‖ Masonry cement mortars must be used according to manufacturers' instructions, and mix proportions of masonry cement to sand should be such as to give comparable mortar crushing strengths with the cement: lime: sand mix of the grade

¶ A longer period should ensue where hardening conditions are not very favourable

Note: Where the cross-sectional plan area of a wall or column does not exceed 0.3 m^2, the basic stress should be multiplied by a reduction factor equal to

$$0.75 \times \frac{A}{1.2}$$

where A is the area (in m^2) of the horizontal cross-section of the wall or column

REDUCTION FACTORS FOR

Slenderness ratio	Stress reduction factor* Axially loaded	Eccentricity of vertical loading as a proportion of the thickness of the member 1/6	1/4	1/3†
6	1.00	1.00	1.00	1.00
8	0.95	0.93	0.92	0.91
10	0.89	0.85	0.83	0.81
12	0.84	0.78	0.75	0.72
14	0.78	0.70	0.66	0.62
16	0.73	0.63	0.58	0.53
18	0.67	0.55	0.49	0.43
20	0.62	0.48	0.41	0.34
22	0.56	0.40	0.32	0.24
24	0.51	0.33	0.24	–
26	0.45	0.25	–	–
27	0:43	0.22	–	–

*** Linear interpolation between values is permitted**
† Where in special cases the eccentricity of loading lies between $\frac{1}{3}$ and $\frac{1}{2}$ of the thickness of the member, the stress reduction should vary linearly between unity and 0.20 for slenderness ratios of 6 and 20 respectively

Table 4 *Reduction factors for slenderness ratios*

SLENDERNESS RATIO

For members with slenderness ratios up to six the basic stresses in the wall or column must be established by the application of a reduction factor to the basic stress. Values for this factor for varying slenderness ratios and eccentricities of loading are given in table 4.

In order to keep the thickness of walls within reasonable limits and, preferably, of the same thickness for the full height of the building, particularly in the case of cross wall construction, variations in the types of bricks and in the mortar mixes are made according to the stresses at different heights. Excessive variation is uneconomic and leads to difficulties in supervision on the site. Sufficient flexibility in strength can, however, be obtained in most buildings by the use of three to four grades of bricks with one or two mixes of mortar.

A non-calculated brick or block wall shall have a thickness at any level not less than onesixtieth of the height measured from that level to thetop of the wall.

A minimum thickness of 190 mm at any point is required in the case of an external wall, whether calculated or not.

Walls built of materials of differing strengths bonded together are less important now as load-bearing structures since the general practice is to use a thin 'veneer' of non-structural facing material attached to a stuctural backing, but provision is made for dealing with such a combination in two ways. The weaker material may be considered to be used throughout the full thickness and the permissible stress established on that basis. Alternatively, the area of that portion of the wall built of the strongest material only may be considered as carrying the load, in which case the permissible stress is established using a slenderness ratio calculated on the thickness of that material alone.

Random rubble walling should be based on permissible stresses of 75 per cent of the corresponding stresses for coursed walling of similar materials.

PROCESS of DESIGN

The design process may be summarized briefly as follows:

1. Calculate total load (W) per metre run of wall or on column at level under consider ation

2. Assume wall or column thick ness and establish slenderness ration.

3. Establish any eccentricity of loading.

4. Ascertain appropriate stress reduction factor (RF) (table 4)

5. Establish bearing area per metre run of wall or of column (A)

6. Establish 'euqivalent basic stress' = $\frac{W}{A \times RF}$

7. Select grade of brick and mortar with strengths appropriate to the equivalent basic stress (table 3)

TYPES OF WALLS

- RETAINING WALLS:
  There primary function is to resist the thrust of soil (or subsoil water) on one side. The most important functional requirement therefore is strength and stability.

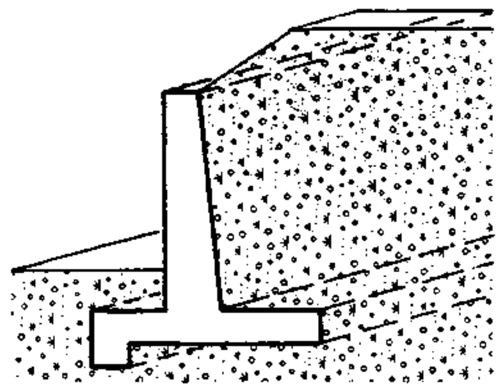

RETAINIG WALL

6.3 Types of Walls

- Walls may be divided into two types:

  1 LOAD - BEARING WALLS
  which support loads from floors and roof in addition to their own weight and resist side pressure (wind, stored material or objects)

  2 NON-LOAD-BEARING WALLS
  which carry no floor or roof loads.

- Each type may be further divided into EXTERNAL (or enclosing)WALLS and INTERNAL (or dividing) WALLS

- The external -non-load-bearing wall (related to framed structures) is termed
  PANEL WALL (if of masonry construction)
  INFILLING PANEL (if of tighter construction)
  CLADDING (when applied to the face of the structure)

- The term PARTITION is applied to walls (generally non-load-bearing and only one storey high) dividing the space within a building into rooms.

  Internal walls which seperate different excupancies within the same building ore divide the building into compartments for the purpose of fire protection are termed
  PARTY (or PARTING) WALLS
  SEPERATING WALLS or
  DIVISION WALLS.

Regarding to the FORM OF CONSTRUCTION Walls may be described by the following terms:

- MASONRY WALL = The wall is built of individual blocks of materials, such as bricks clay or concrete blocks, stone etc., usually in horizontal courses cemented together with some form of mortar.

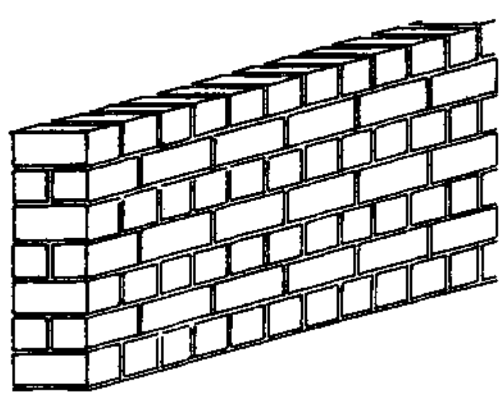

MASONRY WALL

- MONOLITHIC WALL = The wall is built of material requiring some form of support or shuttering in the initial stages. The traditional earth wall and the modern concrete wall are examples of this.

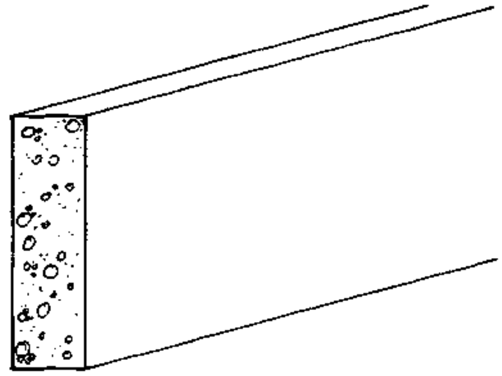

MONOLITHIC WALL

- FRAME WALL = The wall is constructed as a frame of relatively small members (usually of timber) at close intervals which together with facing on each side form a load bearing system.
  N.B. This is a wall construction not a struct. fram of a building.

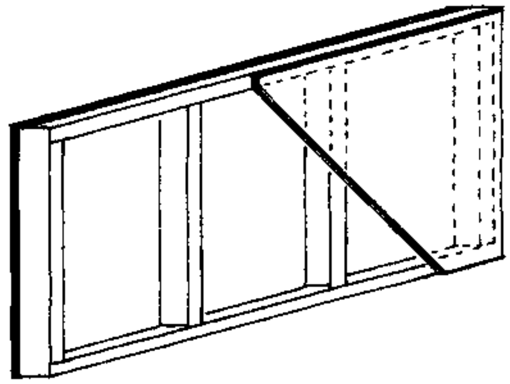

FRAME WALL

- MEMBRANE WALL = The wall is constructed as a sandwich: two thin skins or sheets of reinforced plastic, metal, asbestos-cement or other suitable material bonded to a core of framed plastic to produce a thin wall element of high strength and low weight.

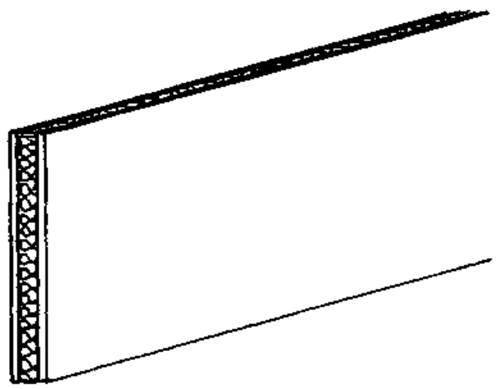

MEMBRANE WALL

- CAVITY WALL = The wall is constructed in two leaves or skins with a space between, so that the outer surface of the wall is isolated from the inner surface by a continous gap.

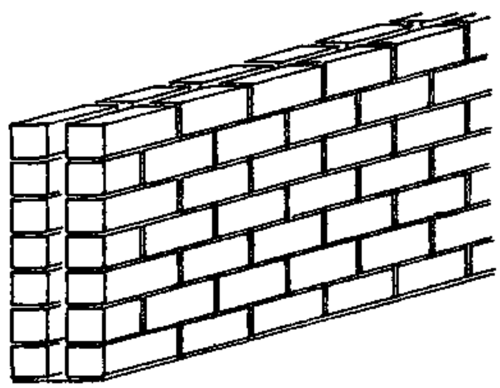

CAVITY WALL

CAVITY-WALLS

- Main purpose: to prevent the penetration of rain to the internal surface of the wall.
- It is essential that the cavity is not bidged in any way as this would provide a passage for the moisture.
- Air bricks are sometimes used to ventilate the cavity (- at the head and the base of the wall).
- There is a tendency for the 2 leaves to move towards each other (below ground level). To overcome this problem it is common practice to fill the cavity below g.l. with a work mix, of concrete thus creating a solid wall in the ground
- It is advisable to leave out every 4th vertical joint in the external leaf at the base of the cavity and above the cavity fill, to allow any moisture to escape.

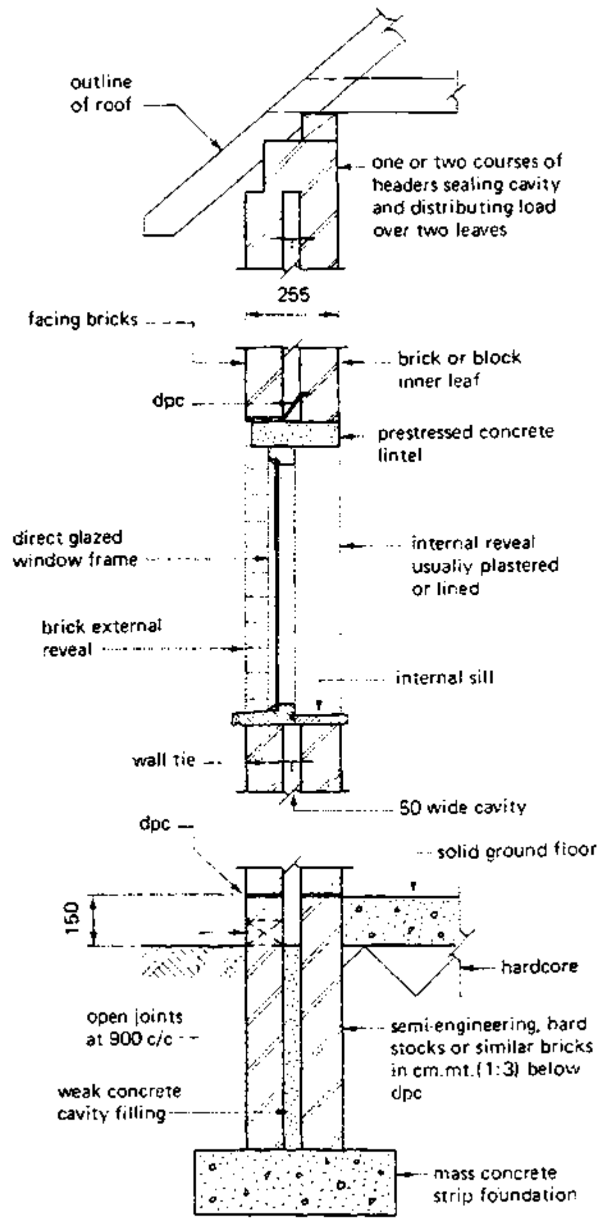

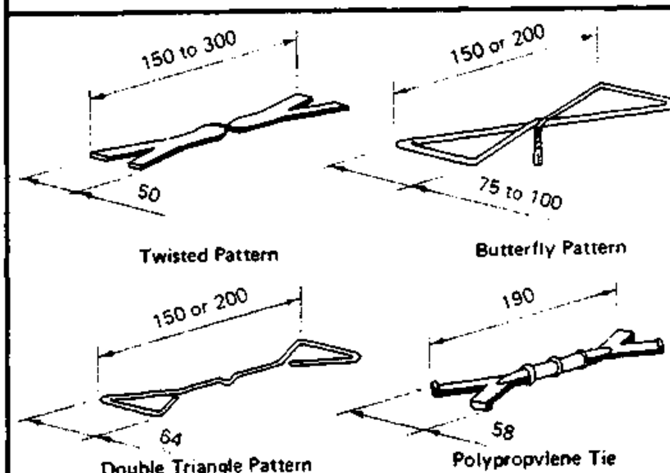

Building Regulations 1972 Schedule 7

Rule 4: This gives the requirements of the strength of brick or blocks to be used in the construction of walls.

It sets out in detail the various crushing strengths and aggregate volumes of solid material required for various situations and classifications.

Rule 11: This sets out the constructional requirements for cavity walls and is of the utmost importance.

1. Bricks and blocks to comply with Rule 4 and be properly bonded and solidly put together with mortar.

2. The leaves to be securely tied together with ties complying with B.S. 1243:1964 or other not less suitable ties, details of horizontal and vertical spacing are given (Fig. II.21)

3. The cavity shall be not less than 50 mm nor more than 75mm in width at any level.

4. The leaves shall be each not less than 100mm in thickness at any level (unless covered by paragr. 6 of Rule 11).

5. The overall thickness to comply with paragraphs 3 and 4 or thickness required by Rules 7 or 8 for solid walls + the width of the cavity (for a nominal 255mm wide cavity wall of any length the maximum height is 3.60 m.

6.a) Inner leaf can be not less than 75mm thick if the wall forms part of a private dwelling house of one story or is the upper story of such a dwelling having only two storeys.

6.b) Inner leaf size not more than 8m in length and not more than 3m in height or 5 m in height if it is a gable wall.

6.c) A gauge mortar not weaker than 1:2:9 to be used.

6.d) Not less than twice the number of wall ties required by paragraph 2 of Rule 11.

6.e) The roof load is supported partly by the outer leaf.

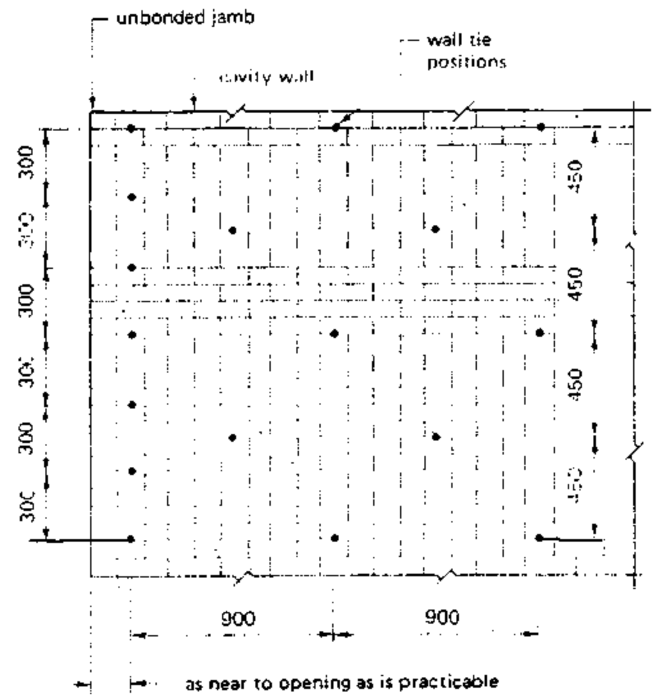

Advantages of cavity wall constructions.

a) Able to withstand a driving rain in all situations from penetrating to the inner wall surface.

b) Gives good thermal insulation.

c) No need for external rendering.

d) Enables the use of cheaper and alternative materials for the inner construction.

e) A nominal 255mm cavity wall has a higher sound insulation value than a standard one brick thick wall.

- Disadvantages of cavity wall constructions.

a) Requires high standard of design and workmanship.

b) The need to include a vertical D.P.C. to all openings.

c) More expensive than a standard one brick thick wall.

- Parapets, whether solid or cavity constructions are exposed to the elements on three sides.

- Therefore an adequate barrier to moisture in form of d.p.c. must be provided.

- A parapet must not be less than 20 cm thick or not less than the thickness of the wall on which it is carried and its height must not exceed 6 x its thickness.
  (Schedule 7, Rule 14, Build. Reg.)
- The presence of water in brickwork can lead to
  - frost damage
  - mortar failure
  - efflorescence

- The incorporation of adequate D.P.C. and overhanging throated copings is of importance in this form of structure.

PARAPETS

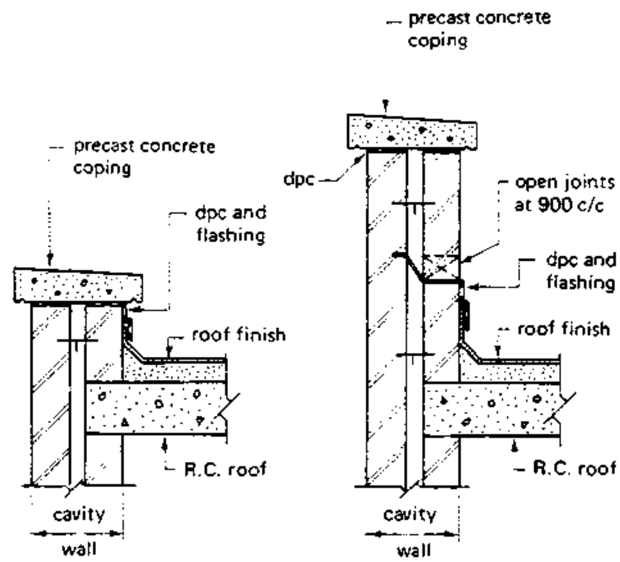

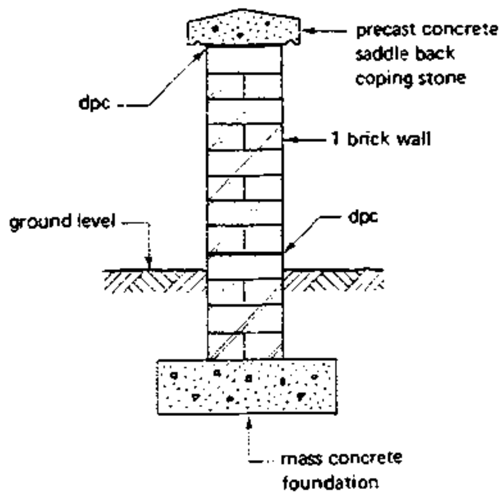

- BOUNDARY WALLS
- are subjected to severe weather conditions and therefore should be designed and constructed correctly.

- as retaining walls = condition even more extrem, but the main design principle remains the same:Exclution of water.

- CROSS-WALLS

The term "cross-wall construction" is applied to buildings in which the walls at right angles to the principal axis are designed to carry the loads from the floors and roof, the lateral front and rear external walls being non-load-bearing.

Cross-wall construction being adopted for certain types of building is illustrated in its simplest form in the figure below.

CROSS-WALL

STONEWORK

6.4. Stonework

TOOLS

1 SPALL HAMMER
2 DUMMY
3 MALLET
4 DRAFTING CHISEL
5 BROAD TOOL
6 DRAG
7 CLAW CHISEL
8 SOFT STONE CHISEL
9 JUMPER (0.50–1.80 m)
10 MASH HAMMER
11 SCRABBLING HAM.
12 BUSH HAMMER
13 FLAT LUMP HAM.

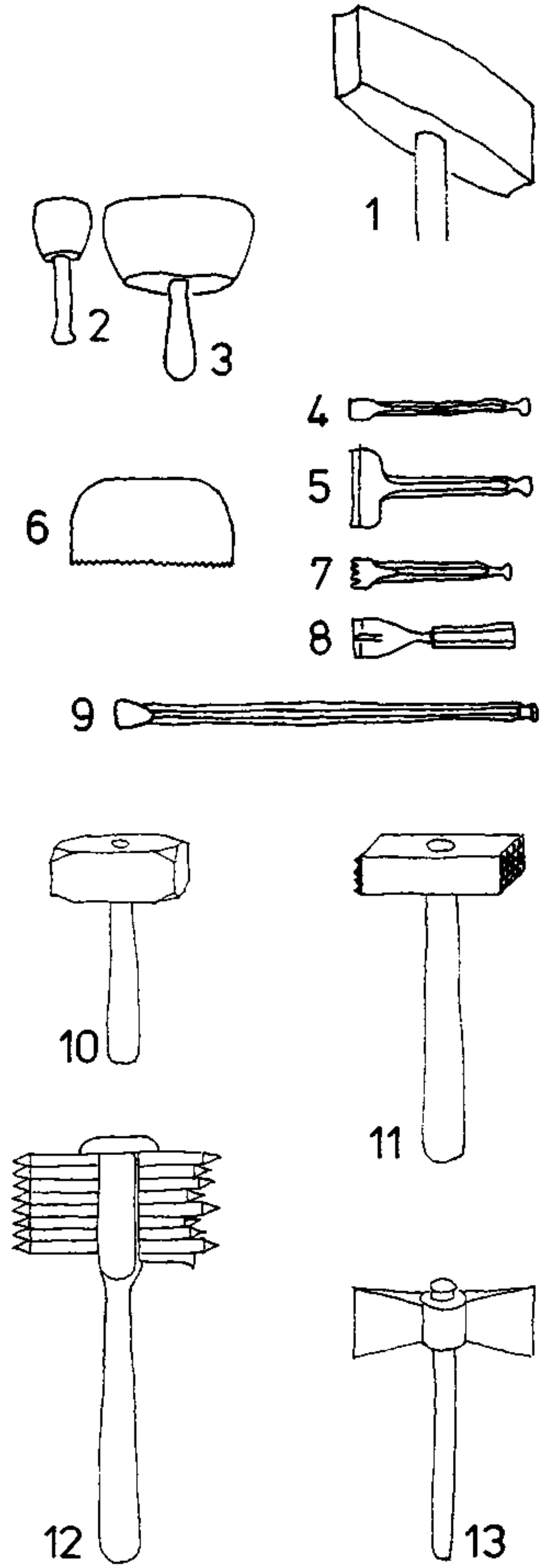

SURFACE FINISHES & TOOLS

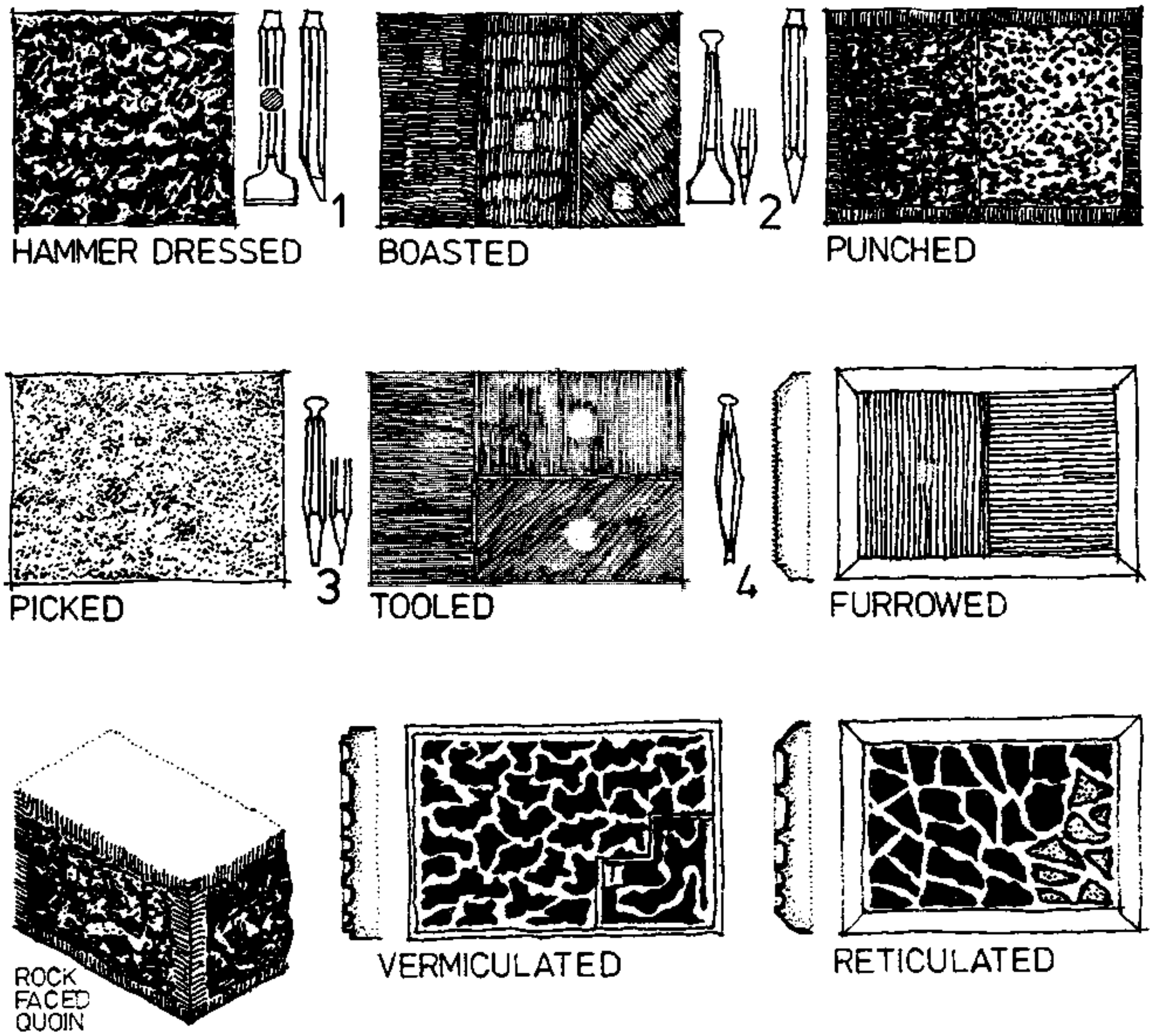

1 PITCHING TOOL
2 BOASTER
3 POINT
4 GOUGE

6.WALLS compiled : D.VOLKE JULY '80	STONEWORK	BUILDING CONSTR. — LECTURE — CET 3031/16.4 25

BUILDING STONES

6.4.1 Building stones

- Stones used in building can be divided into 3 classes as follows:
  (1): Igneous
  (2): Sedimentary
  (3): Metamorphic

- Igneous stones: Originate from volcanic action being formed by the crystallisation of malten rockmatter derived from deep in the earth's crust.

- granites are typical of this class of stone: hard/durable and capable of a fine polished finish.
- granites are mainly composed of quartz, felspar and mica.

- Sedimentary stones: composed of material derived from the breakdown and erosion of existing rocks deposited in layers under the waters, which at that time covered much of the earth's surface.

- Sandstones and limestones are typical examples of sedimentary stones.
  - o Sandstones are stratified sedimentary rocks, produced by the eroded and disintegrated rocks, like granite, being carried away and deposited by water in layers. The brown and yellow tints in sandstones are due to the presence of oxids of iron.
  - o Limestones may be organically formed by the deposit of tiny shells and calcareous skeletons in the seas and rivers, or may be formed chemically by deposits of lime in ringed layers. Limestones vary considerably from heavy crystalline form to a triable material such as chalk.

- Metamorphic stones: have altered and may have been originally igneous or sedimentary rocks have been changed by geological processes such as
  - pressure
  - movement
  - heat

  and chemical reaction due to infiltration of fluids.

- Marbles and slates are typical examples.
  - o Marbles are metamorphic limestones, being changed by pressure. Being capable of taking a high polish/are used mainly for decorative work.
  - o Slate is a metamorphic clay, having been subjected to great pressure and heat; being derived from a sedimentary layer it can be easily split into thin members.

STONES

STONE BLOCK
sawn into
SLABS

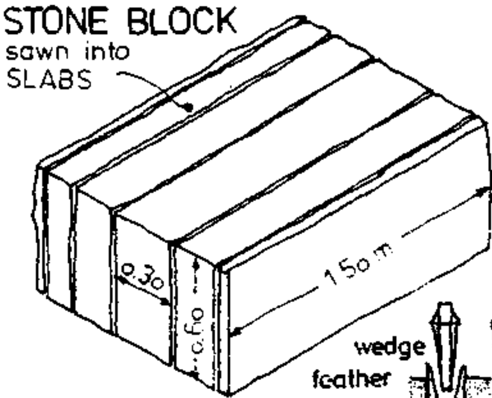

SPLITTING
a BLOCK of
STONE

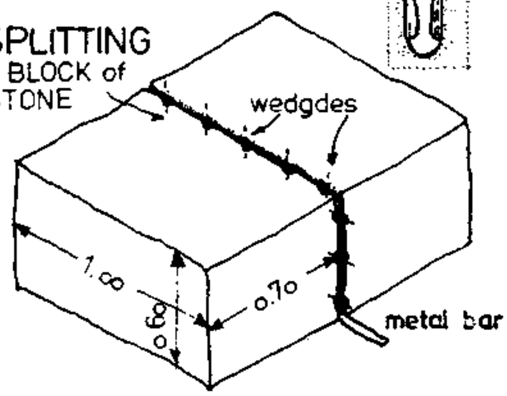

FORMING
a true FACE

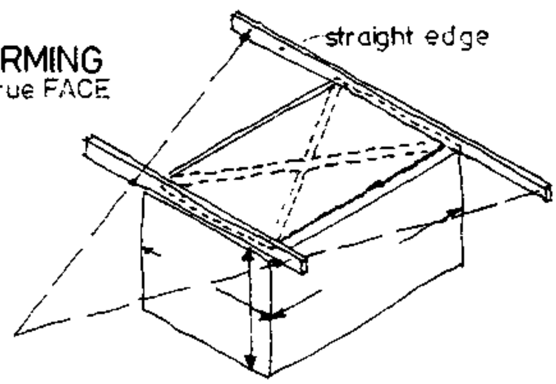

- <u>Stones</u> are obtained from quarries by blasting and wedging the block away from the solid mass. They are partly worked in the quarry and then sent to store yards where they can be
  - saw
  - cut
  - moulded
  - dressed or/and
  - polished.

Today, natural stones are sometimes used for:-facing prestige buildings;-constructing boundary or similar walls.

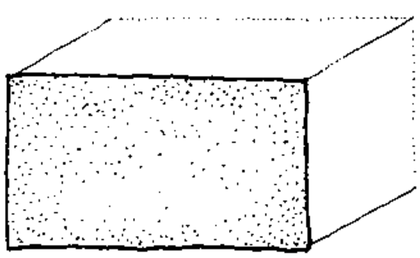

RECONSTRUCTED

- <u>Reconstructed stones</u>: are substitutes for natural stones. They are homogeneous throughout and therefore has the same texture and colour as the natural stones they are intended to substitute.

  - They can be worked in the same manner as natural stone or alternatively
  - they can be cast into shaped moulds.

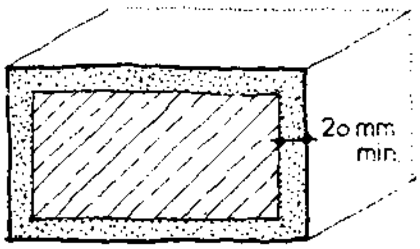

ARTIFICIAL

- Artificial stones: consist partly of a facing material and partly of a structural concrete.

  - The facing is a mixture of fine aggregate of natural stone and cement.

  - The facing should be cast as an integral part of the stone and have a minimum thickness of 20 mm.

  - They are cheaper than reconstructed stones but have the disadvantage that if damaged the concrete core may be exposed.

DEFECTS IN STONE

- DEFECTS IN STONE

o Vents: are small fissures or hollows in the stone which may cause it to deteriorate rapidly, especially if exposed. Stone with vents should not be used for building purposes.

o Shakes or snailcreep: are minute cracks in the stone containing calcite (a carbonite of lime) and forming hard veins which - in course of time - project beyond the general face on account of their greater durability.
It is not advisable to use stone containing them on account of the difference in texture which results.

o Sand-holes: are cracks which appear in the stone and which are filled with sandy matter. Clay-holes are vents which contain matter of a clayey nature. Both are readily decomposed when subjected to the action of weather, and the stone should be rejected.

o Mottle: is a defect which causes the stone to have a spotted appearance due to the presence of small chalky patches. Such stone is unfit for building purpose.

o The presence of clay and oxide of iron is apt to cause disfigurement of the stone, producing brown-coloured bands which interfere with the uniformity in colour of the stone and diminish its durability.

o An inherent defect is the presence of shells fossils, cavities and flints. These are often not detected until the large blocks from the quarry are being converted into smaller units, the saw-arts revealing their presence. The affected portions must be removed and therefore wast results.

STONEWORK TERMINOLOGY

6.4.2 Stonework Therminology

Arris: meeting edges of two worked surfaces.

Ashlar: a square hewn stone; stonework consisting of blocks of stone finely squared and dressed to given dimensions and laid to courses of not less than 300 mm in height.

Bed joint: horizontal joint between two courses.

Bonders: through stones or stones penetrating 2/3 of the thickness of a wall.

Cramp: non-ferrous metal or slate tie across a joint.

Dowel: non-ferrous or slate peg morticed into adjacent joints.

Yoggle: recessed key filled with a suitable material, used between adjacent votical joints.

Lacing: courses of different material to add strength.

Natural bed: plane of stratification in sedimentary stones.

Quarry seep: moisture contained in newly quarried stones.

Quoin: corner stone

Stool: flat seating on a weathered sill for jamb or mullion.

String course: distinctive course or band used mainly for decoration.

Weathering: sloping surface to part of the structure to help shed the rain.

STONEWORK CLASSIFICATION

6.4.3 <u>Stonework Classification</u>
The various classes of stonework may be devided into:

(1) Rubble Work and
(2) Ashlar Work

<u>RANDOM RUBBLE</u>
uncoursed

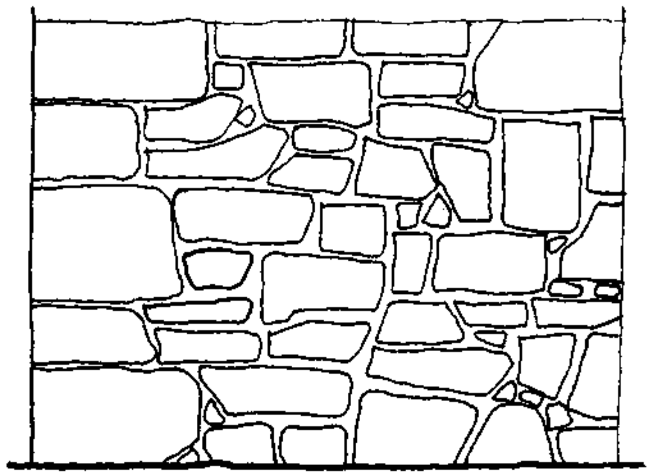

<u>RANDOM RUBBLE</u>
brought to courses

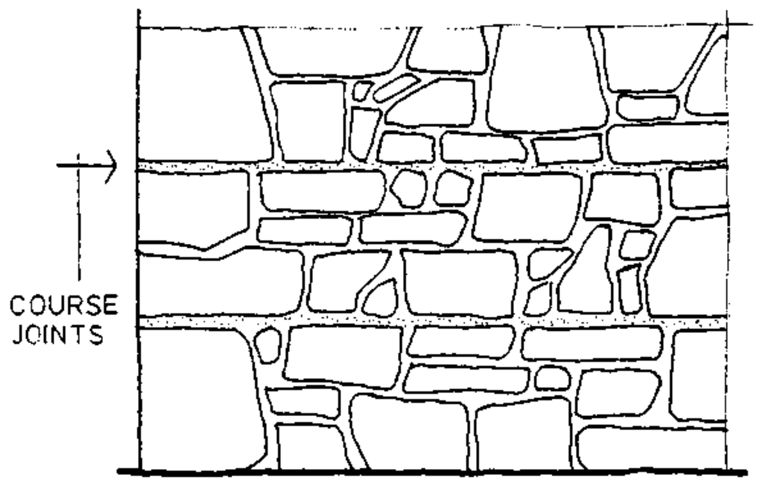

<u>POLYGONAL RUBBLE</u>

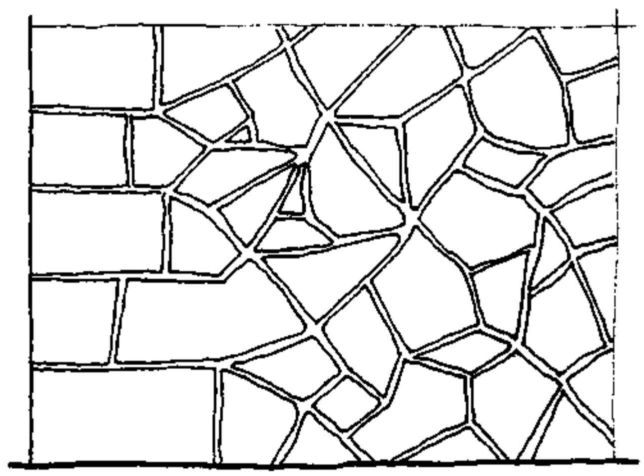

SQUARED RUBBLE
uncoursed

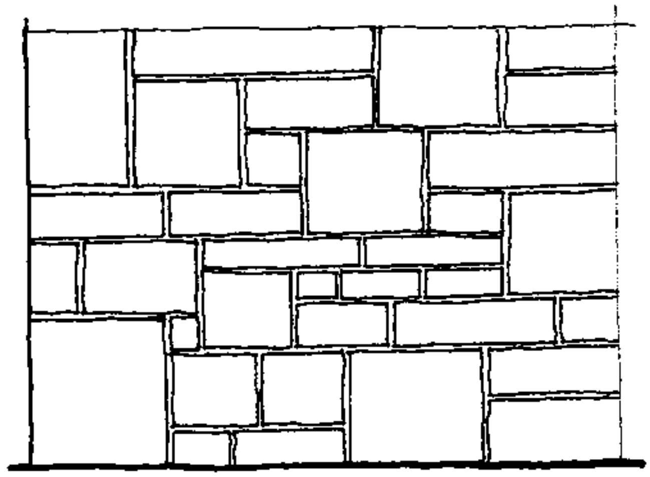

SNECKED RUBBLE

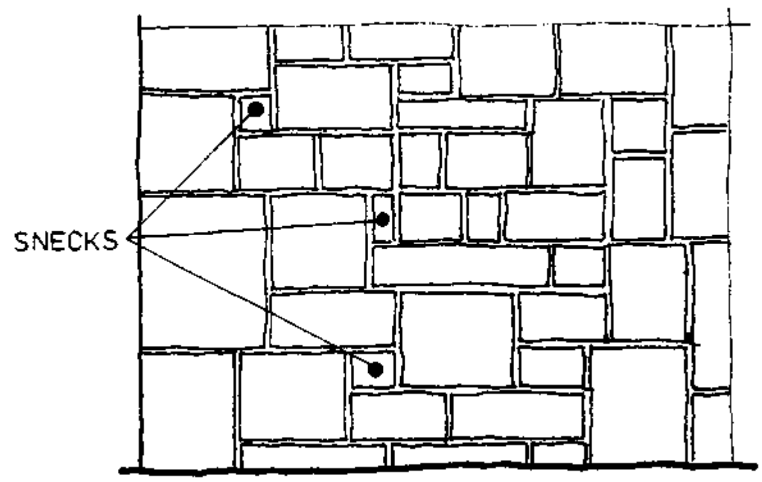

SQUARED RUBBLE
brought to courses

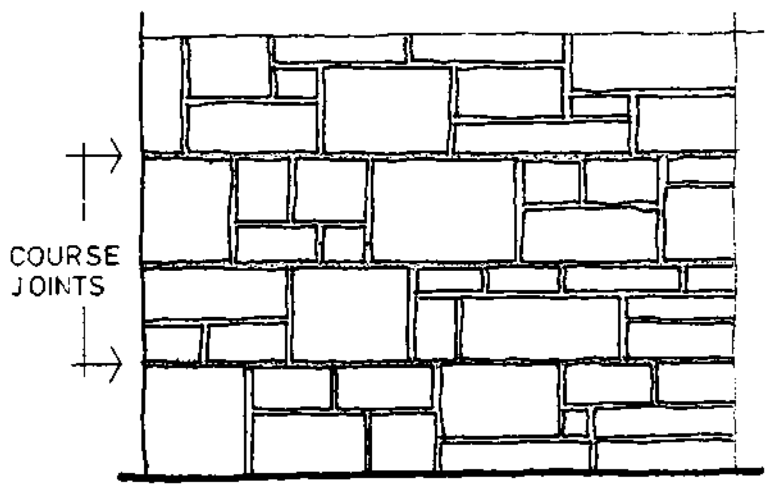

RUBBLE
regular coursed

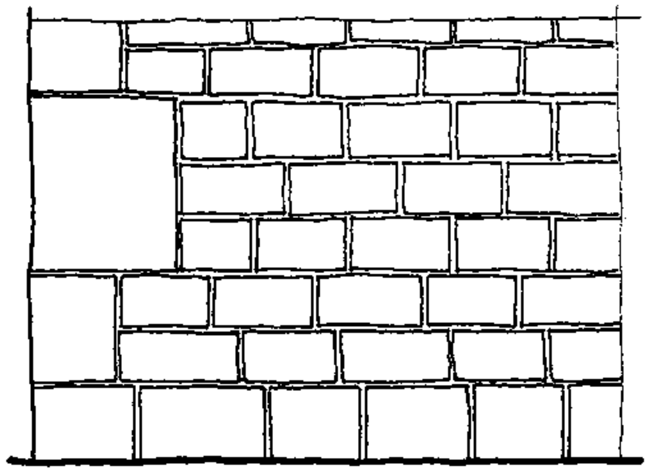

ASHLAR

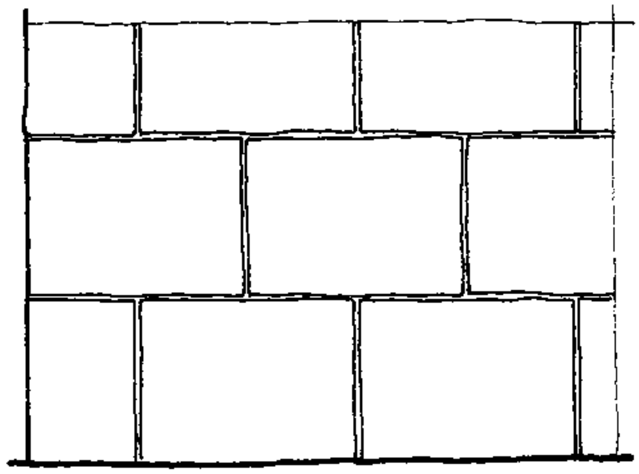

RUBBLE WALLING

6.4.4 Rubble Walling

- These walls are made of stones which are left rough or uneven thus presenting a natural appearance to the face of the wall.

- The stones are usually laid with a wide joint and are used in various forms.
  They can be laid:
  o dry
  o bedded in earth (in boundary walls)
  o bedded in Limemortar (i.e. outbuildings of farm houses)
  o bedded in cement or gauged mortar (in ashlar walls).

- Commonly the quins to corners, windows and door openings are dressed or ashlar stones.

- The face of any backing material to be treated with a suitable water-proofing coat (to prevent the passage of moisture).
- Precautions in form of d.p.c. are necessary to comply with Part C - Building Regulations.

- Rubble work includes:

  (a) Random Rubble
  (1) uncoursed
  (2) build to courses

  (b) squared Rubble
  (1) uncoursed
  (2) build to courses
  (3) regular coursed

  (c) Miscellaneous
  (1) polygonal walling
  (2) flint walling

KNOW HOW

PROPPER BONDING

CORRECT

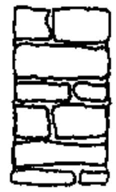
SECTION

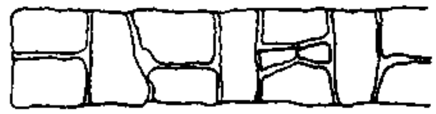
TOP VIEW

WRONG

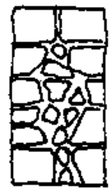
SECTION


TOP VIEW

JOINTS

WRONG

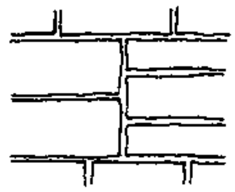
VERTICAL JOINTS (CROSS or HEAD-JOINTS) TROUGH DIFF. COURSES

OR

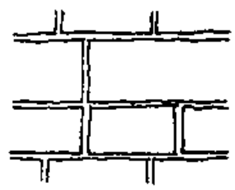
THE CROSSING OF JOINTS

TO BE AVOIDED

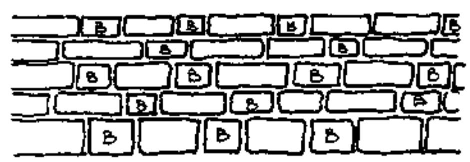

N.B. AFTER (at least) TWO STRETCHERS ONE BONDER has to follow!

BONDER

BONDER

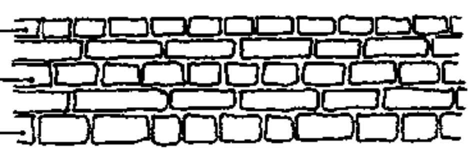

BONDER COURSES

N.B. THE DEPTH of a BONDER to be approx. 1 1/2 the THICKNESS of the COURSE (min. 3o cm)

6.WALLS	STONEWORK	BUILDING CONSTR.
compiled : D.VOLKE		—— LECTURE ——
JULY '80		CET 3031/16.4 33

KNOW HOW

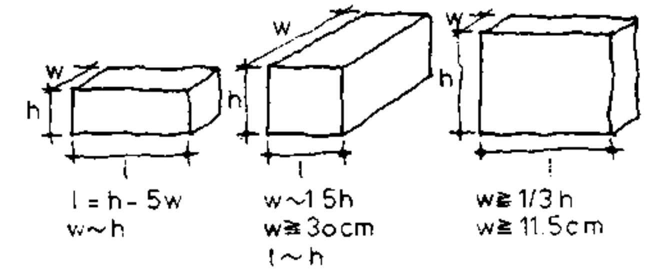

OVERLAPPING OF CROSS JOINTS

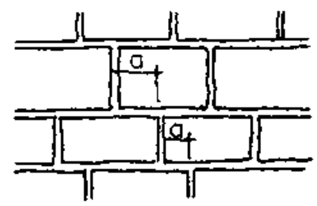

IN COURSED RUBBLE WALLS: a = 10 cm
IN ASHLAR WALLS a = 15cm

USE OF FLINT STONEs

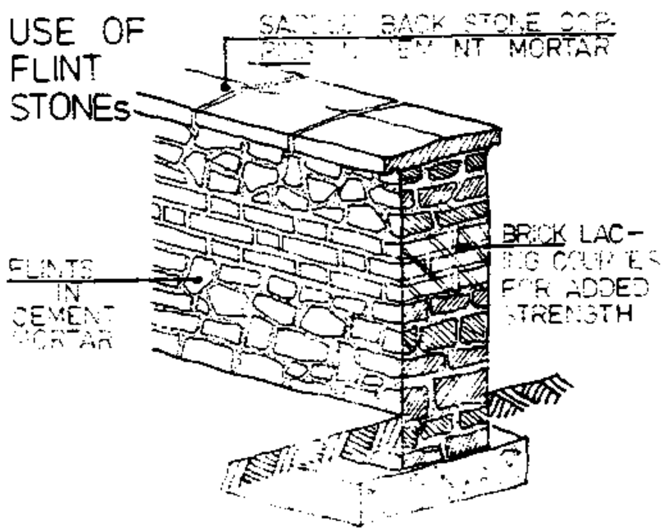

USE of MORTAR

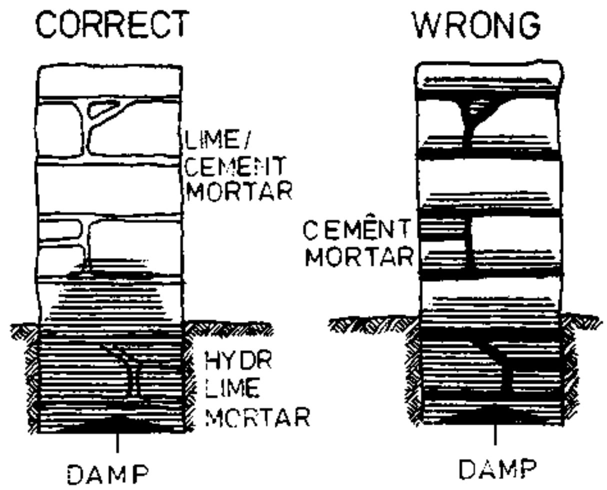

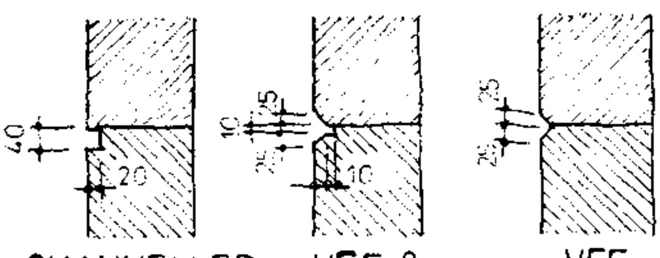

CHANNELLED JOINT

VEE & CHANNELLED JOINT

VEE JOINT

6.WALLS	STONEWORK	BUILDING CONSTR.
compiled: D.VOLKE		—LECTURE—
JULY '80		CET 3031/16.4 34
TCA TECHNICAL COLLEGE ARUSHA CHUO CHA UFUNDI ARUSHA	CIVIL ENGINEER DEPARTMENT	34

ASHLAR WALLING

6.4.5 Ashlar Walling

- This form of stone walling is composed of
  - o carefully worked stones
  - o regular coursed
  - o bonded
  - o set with thin rusticated joints

  and is used for the majority of high-class facingwork in stone.
- The quoins are sometimes given a surface treatment to emphasize the opening or corner of the building.
- Most of the ashlar work is carried out in Limestone (10-30 cm thick) and set in mason's putty which is a mixture of stonedust/lime putty/portland cement.
  Typical ratio: 7/5/2.

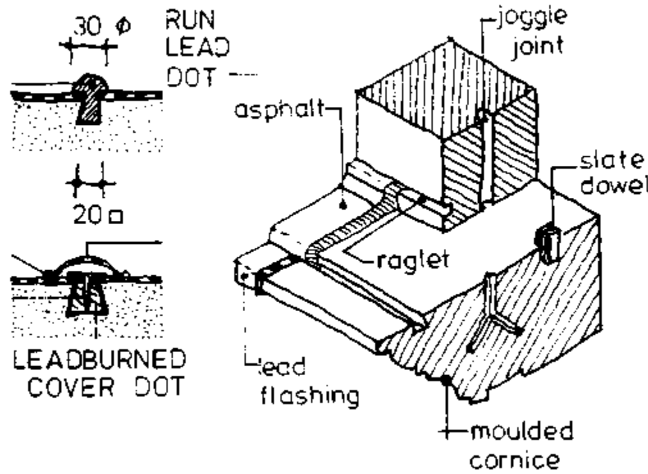

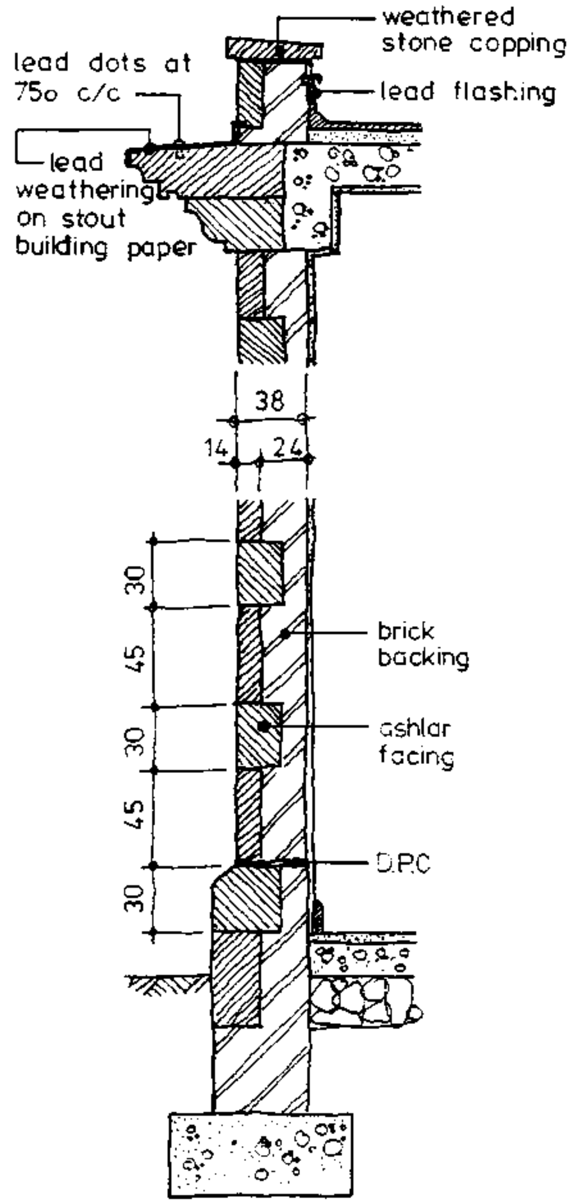

RULES

6.4.5.1 Rules for ashlar work

1. Back faces of ashlar stones should be painted with a bituminous or similar waterproofing paint.
2. External stone work must not be taken through the thickness of the wall since this could create a passage for moisture.
3. Ledges of corcices and external projections should be covered with LEAD, COPPER, or ASPHALT to prevent damage by rain or birds.

4. Moulded cornices should be raked back at 45° to counteract the cantilever action.

5. Face of stones should be given a protective coat of slurry during construction, the slurry being washed off immediately prior to completion.

JOINTS & CONNECTIONS

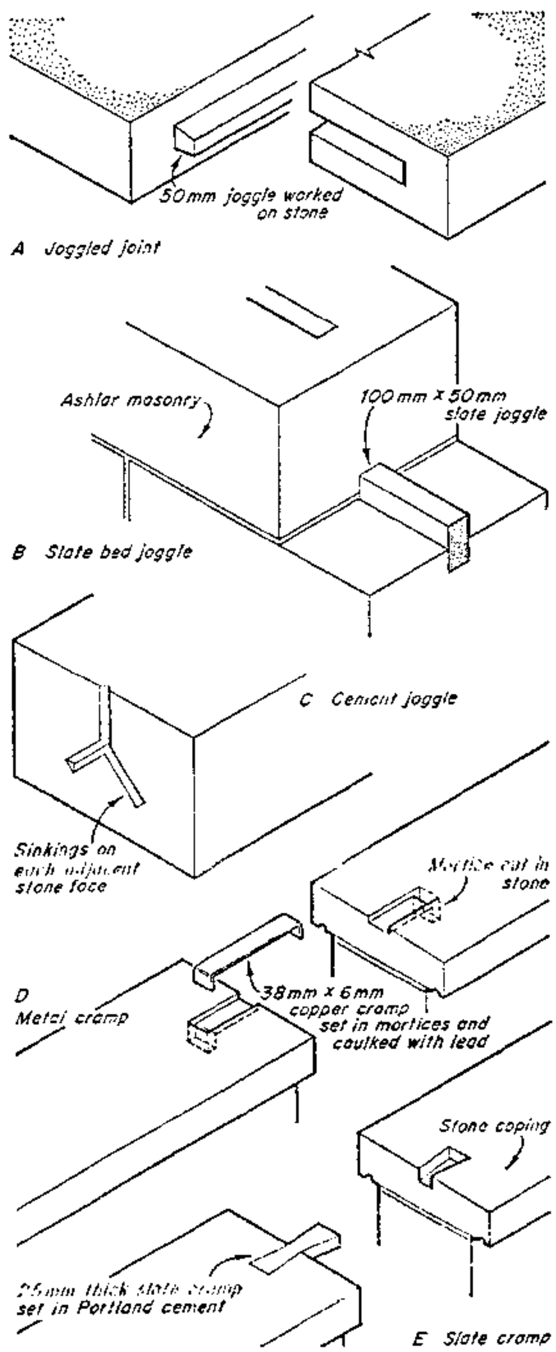

BRICKWORK

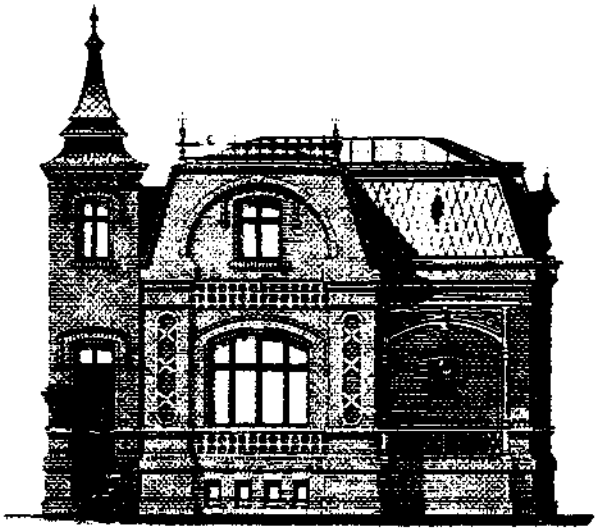

BRICKWORK : 19th CENTURY

6.5 Brick work

- In BS 3921, Part 2, a brick is defined as a walling unit not exceeding
  337,5 mm in length
  225,5 " " width
  112,5 " " height

This particular standard deals with bricks made of fired brick-earth, clay or shall; other standards deal with those made of calcium silicate or concrete.

Bricks are known by their format size (= actual size + 10 mm joint allowance to three faces).

BRICKWORK: 17th CENTURY

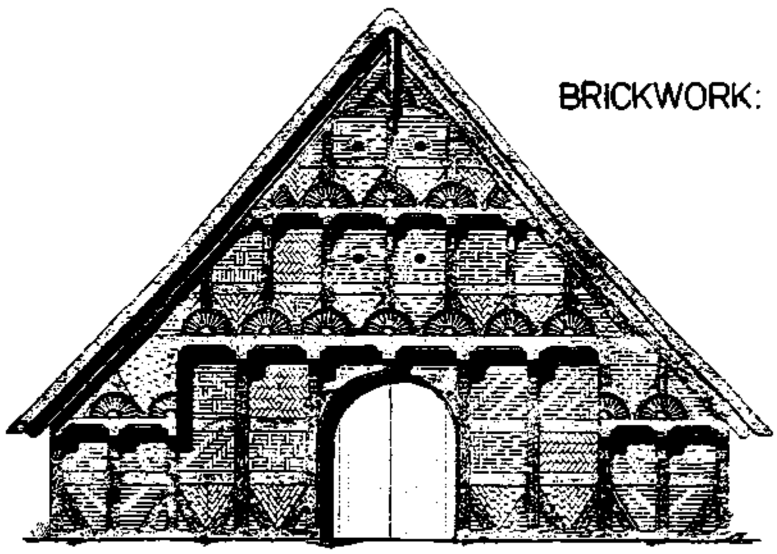

MODERN BRICKWORK : arch.RUDOLPH

- Brick work is used primarily in the construction of walls by bedding and jointing of bricks into established bounding arrangements.

  The term also covers the building in of - hollow blocks and other
  - light weight blocks.

BRICKWORK TERMINOLOGY

1 STANDARD BRICKS :

a) BRITISH STANDARD :

215 × 102.5 × 65 mm

b) GERMAN STANDARD :

240 × 115 × 71 mm

6.5.1 Brickwork terminology.

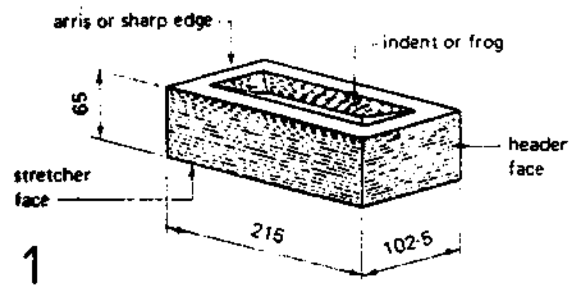

1

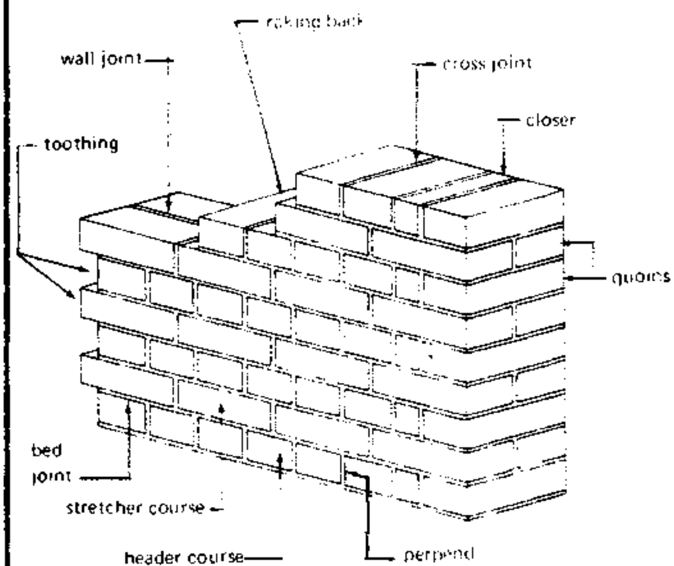

2 STOPPED END of a ONE BRICK WALL

3 HALF BAT

4 THREE QUARTER BAT

5 BEVELLED BAT-large

6 BEVELLED BAT-small

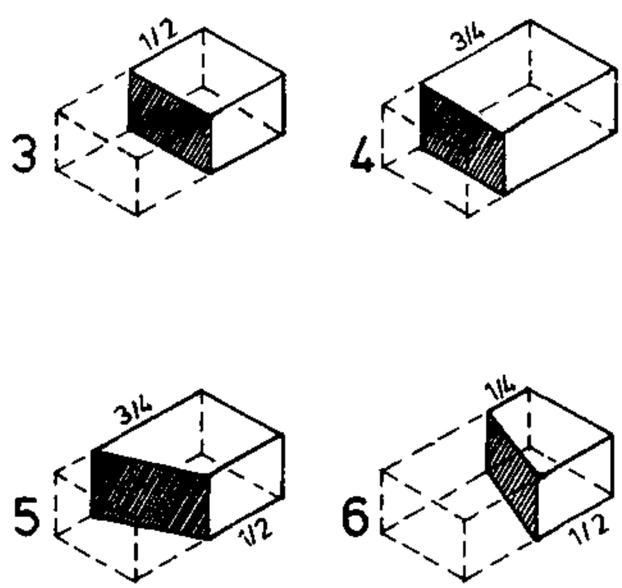

7 QUEEN CLOSER–HALF

8 QUEEN CLOSER–QUART.

9 KING CLOSER

10 BEVELLED CLOSER

11 MITRED CLOSERS

12 DOUBLE BULLNOSE

13 SPLAY–STRETCHER

14 SPLAY–HEADER

7
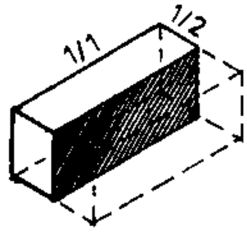

8
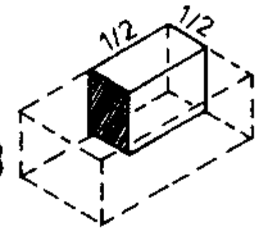

9
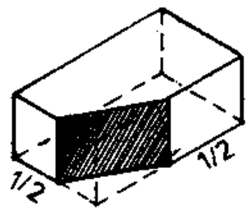

10
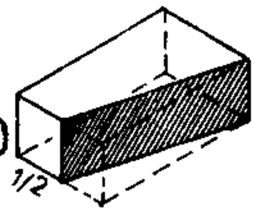

11
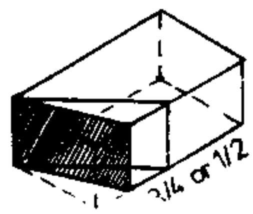

12
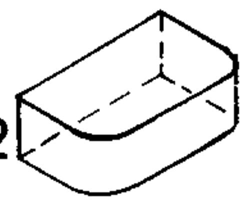

13
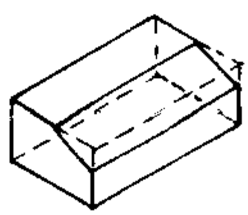

14
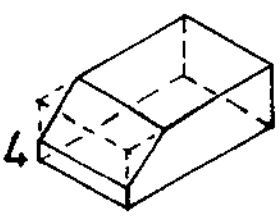

2 HEADERS + 1 JOINT (10mm)
= STRETCHER

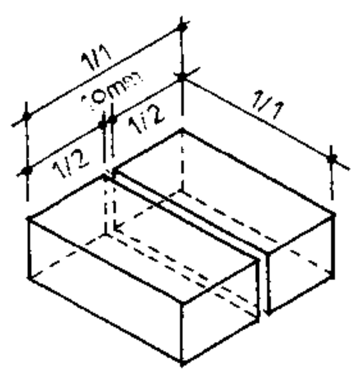

MANUFACTURE : clay BRICKS

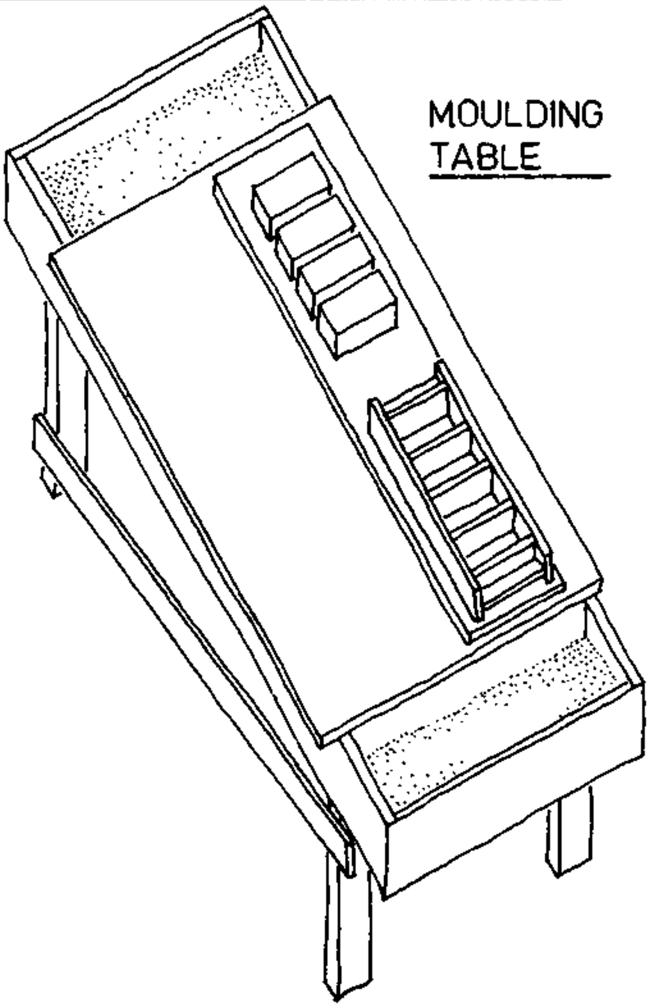

6.5.2 Manufacture of clay bricks

- The basic raw material is:
  - clay
  - shale or
  - brickearth

- The raw material to be
  - dug
  - prepared (by weathering or grinding)
  - mixed with water (to the right plastic condition)
  - formed (into the required brickshape)
  - dried (under a shed)
  - fired in a Kiln.

- Different clays have different characteristics (such as moisture content, chemical composition) therefore: distinct variations of the broad manufacturing processes have been developed.

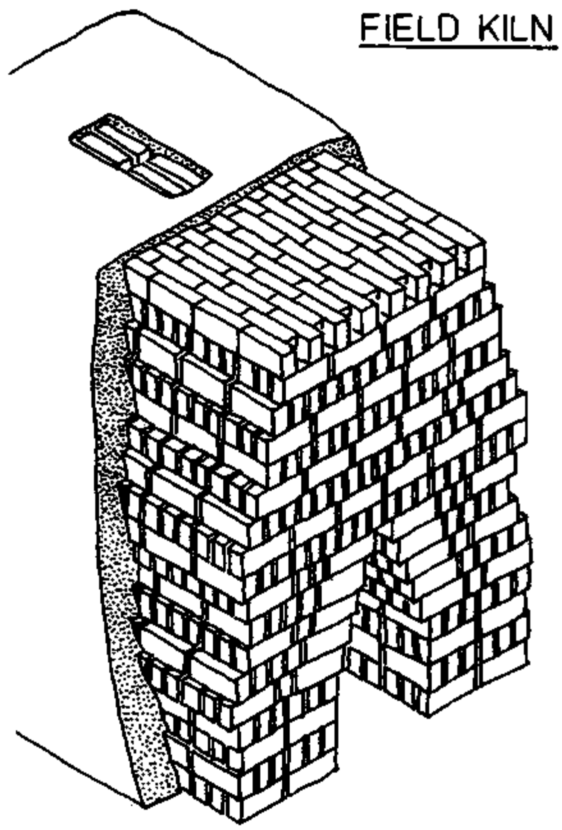

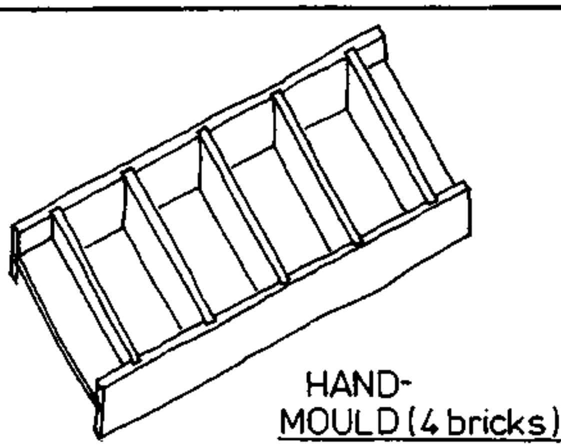

PRESSED BRICKS

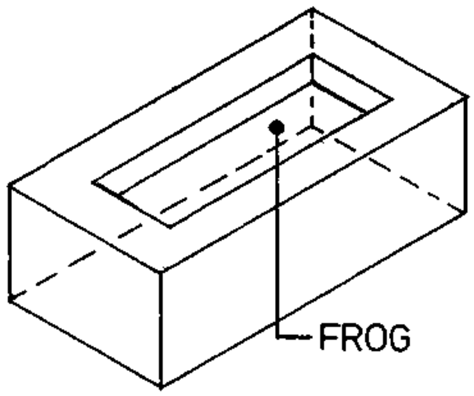

6.5.2.1 Pressed Bricks

- This type of brick is the most common used.
- There are 2 processes of pressed brick manufacture:

  (1) semi dry = clays which have a low natural plasticity. The clay is ground, screened and pressed directly into the moulds.

  (2) stiff plastic = The clays require more grinding and the clayclust needs tempering (mixing with water) before being pressed into the mould.

Most pressed bricks contain frogs which are sometimes pressed on both bed faces. In general pressed bricks are more accurate in shape than other clay bricks with sharp arrises and plain faces.

6.5.2.2 Wire cut bricks

- The clay, which is usually fairly soft and of fine texture is extended as a continous ribbon and is cut into brick units by tightly streched wires spaced, at the height or depth for the required brick.
- Allowance is made during the extension and cutting for the shrinkage that will occur during firing.
- Wire cut bricks do not have frogs and on many the wire cutting marks can be clearly seen.

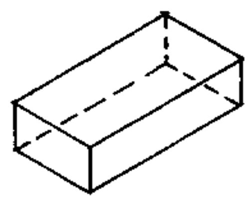

WIRE CUT BRICKS

EFFLORESCEN-CE

6.5.2.3 Efflorescence

= White stain appearing on the face of brickwork
    caused by deposits of soluble salts formed on or near the surface of the brickwork
  as a result of evaporation of the water in which they have been dissolved,

- it is usually harmless and disappears within a short period of time,
- dry brushing or with clean water may be used to remove the salt deposite but the use of acids should be left to the expert.

CLASSIFICATION

6.5.3 Brick classification

- No standard system for the classification of bricks has yet been devised.
  Bricks are generally known by the terms given in B.S. 3921 or by the description given by the brick manufacturer (or a combination of the two).

  BS 392, Part 2
  This standard gives 3 headings:

  (1) Varieties: - common
  - facing
  - engineering

  (2) Qualities: - internal
  - ordinary
  - special

  (3) Types: - <u>solid</u>/ holes do not exceed 25% of volume.
  Frogs do not exceed 20% of volume.
  (A small hole is difined as a hole less than 20 mm wide or less than $500mm^2$ in area).

  - <u>perforated</u>: holes exceed 25% of volume.

  - <u>hollow</u>: holes exceed 25% of volumes holes are larger.

  - <u>cellular</u>: holes are close at one end and exceed 20% of the volume.

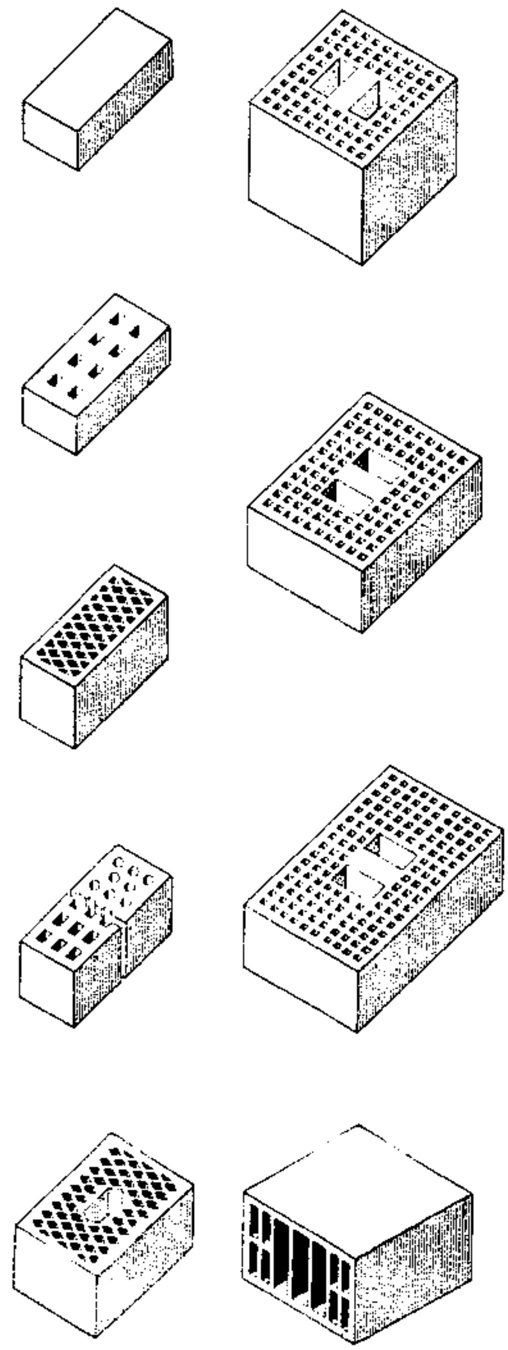

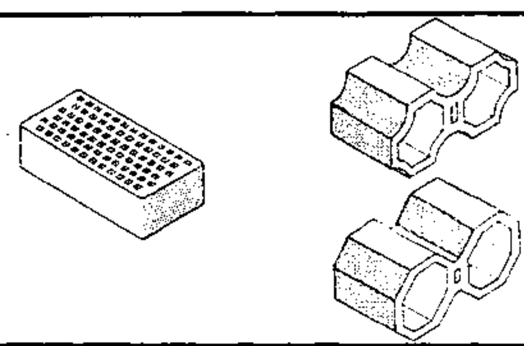

Bricks may also be classified by one or more of the following:
- place of origin
- raw material (i.e. clay)
- manufacture (" wire cut)
- use (" foundation)
- colour
- surface texture (i.e.sand-faced)

CALCIUM SILICATE BRICKS

6.5.4 Calcium silicate bricks

- These bricks are also called sandlime and sometimes flint-lime bricks and are covered by B.S. 187, Part 2, which gives 8 classes of bricks - the higher the numbered class the stronger is the brick.

- The formate size = standard clay brick.

- These bricks are carefully selected clean sand and/or crushed flint mixed with controlled quantities of lime and water.
  (At this stage colouring pigments can be added if required). The relatively dry mix is then fed into presses to be formed into the required shape.

- The moulded bricks are then hardened in sealed and steam pressurised into claves.

- This process, which takes from seven to ten hours, causes a reaction between the sand and the lime resulting in a strong homogeneous brick which is ready for immediate delivery and laying the bricks are very accurate in size and shape but do not have the individual character of clay bricks.

CONCRETE BRICKS

6.5.5 Concrete Bricks

- These are made from a mixture of aggregate and cement in a similar fashion to calcium silicate bricks and are cured either by natural weathering or in an autoclave.

  Details of the types and properties available as standard concrete bricks are given in B.S. 1180.

MORTARS

mixes:

1:3

1:3

1:1:6
1:2:9
1:3:12

6.5.6 Mortars for brickwork

The mortar used in brickwork transfers the stresses, tensile, compressive and shear uniformly between adjacent brick. To do this it must satisfy certain requirements:

1. Adequate strength (not greater than the required for the designed strength).
2. Good workability
3. Plasticity long enough for the bricks to be laid.
4. Durable over lay period.
5. Bond well to the brick.
6. Able to be produced at an economical cost.

- If the mortar is weaker than the brick shrinkage cracks will tend to follow the joints of the brickcoat and these are reasonably easy to make good.

If the mortar is stronger shrinkage cracks will tend to be vertical through the joints and the brick thus weakening the fabric of the structure.

Typical mixes (by volume)

Cement mortar (1:3) suitable for brickwork in exposed conditions such as parapets and for brickwork in fondation.

Lime mortar (1:3) for internal use.

Gauged mortar (cem./lime/sand)

1:1:6 suitable for most conditions.
1:2:9 suitable for most conditions except those of severe expose.
1:3:12 internal use only.

DAMPNESS PENETRATION

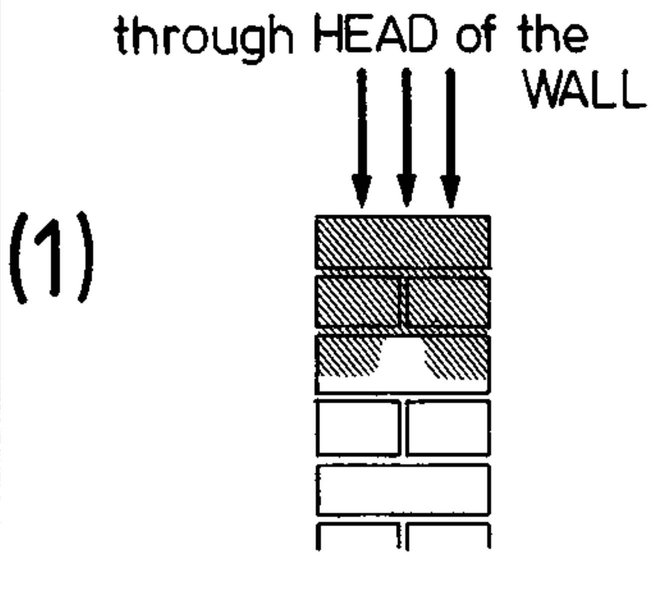

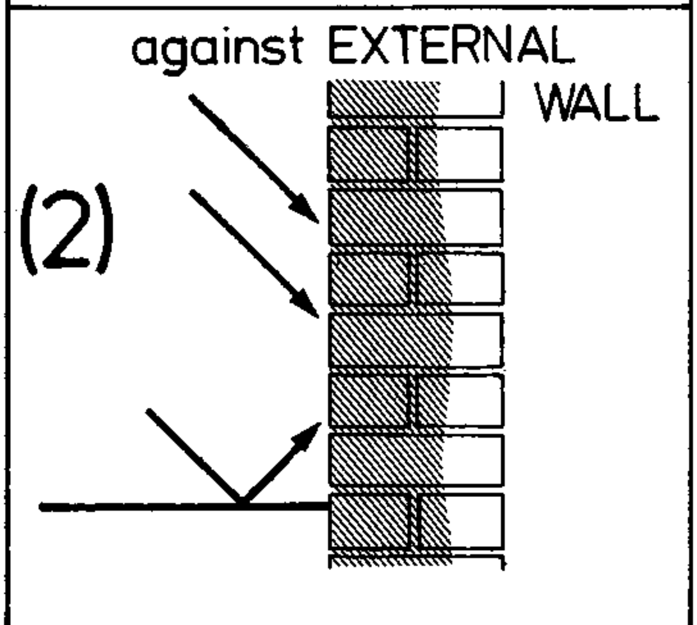

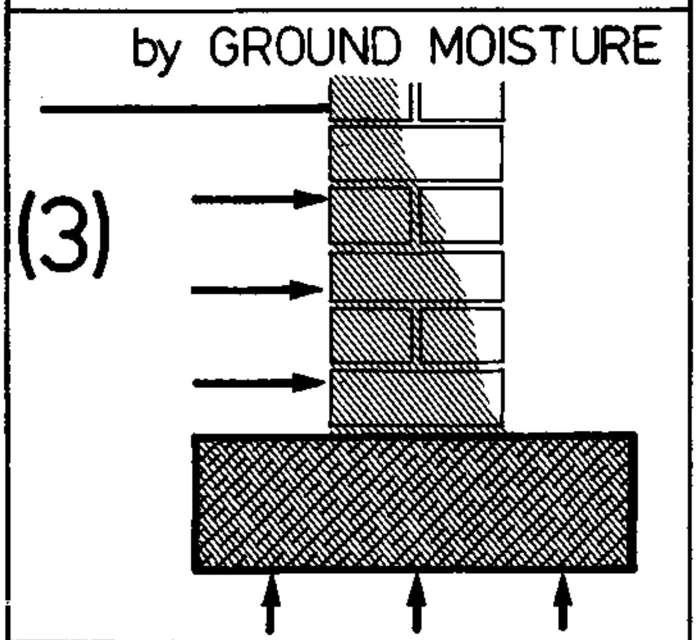

6.5.7 <u>Dampness penetration</u>

- It is possible for dampness to penetrate into a building through the walls by one or more of three ways:

  (1) By the rain penetrating the head of the wall and soaking down into the building below the roaf level.

  (2) By the rain beating against the external wall and soaking through the fabric into the building.

  (3) By ground moisture entering the wall at or near to the base and creeping up the wall by capillary action and entering the building above the ground floor level.

- Nos. 1 and 3 can be overcome by the insertion of a suitable D.P.C. in the thickness of the wall.

- No. 2 can be overcome by one of the two methods:

  (a) Applying to the exposed face of the wall a barrier such as cement rendering or some suitable cladding like vertical tile hanging.

  (b) By constructing a cavity wall, whereby only the external skin becomes damp. The cavity, providing a suitable barrier to the passage of moisture through the wall.

BONDING

6.5.8 Brickwork bonding

- Bricks are layed to bonds, in order
  - to ensure stability of the structure and
  - to produce a pleasing appearance.
- No vertical joint in any one course to be directly above or below a vertical joint in the adjoining course.
- Special bricks are produced (or cut from whole bricks on site) to simplify this requirement (Fig. II 11)
- The various bonds are planned to give the greatest practical amount of lap to all bricks. (= not to be less than 1/4 of a brick length).
- Properly bonded brickwork distributes the load over as large an area as possible (angle at spread of the load = 60°)

6.5.8.1 Common bonds

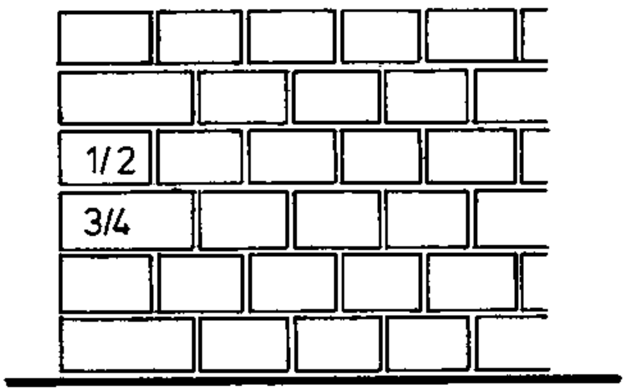

Header bond: Consists of all headers, with the bond being formed by 3/4 bats at the quoins. It is used for one-brick walls in footing courses or walling curved on plan.

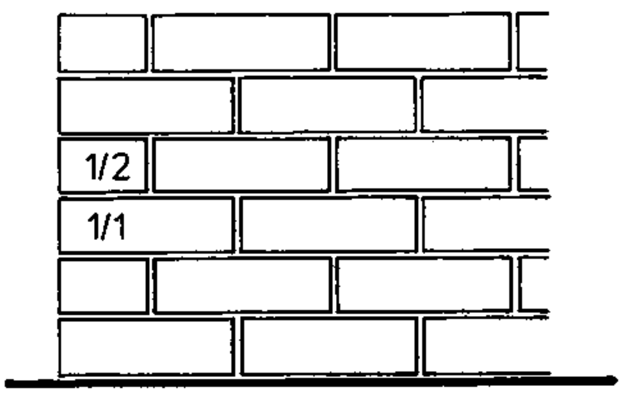

Stretcher bond: consists of all stretchers in every course and is used for half brick walls and the half brick skins of hollow or cavity walls.

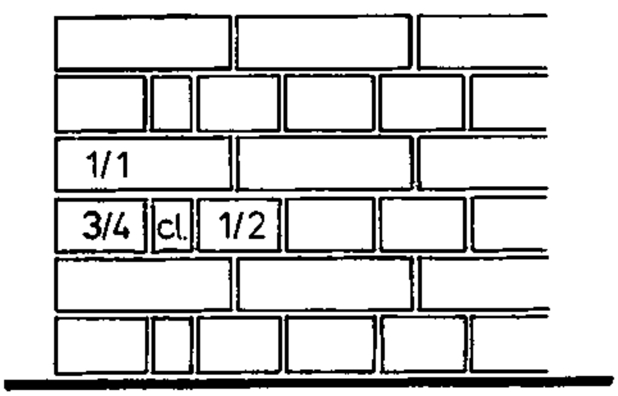

English bond: A very strong bond consisting of alternate headers and stretchers, with a queen closer placed next to the quion heder to form the lap.

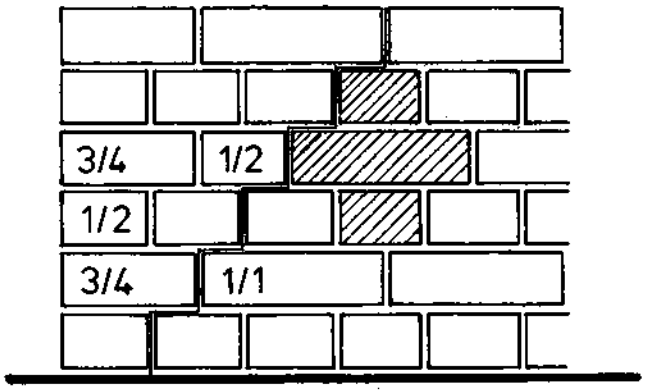

Cross bond: The strongest possible bond used for one-brick walls consisting of alternate courses of headers and stretchers, with the bond being formed by 3/4 bats at the quoins of the stretcher courses. In every second stretcher course the 3/4 bats are followed by a header.

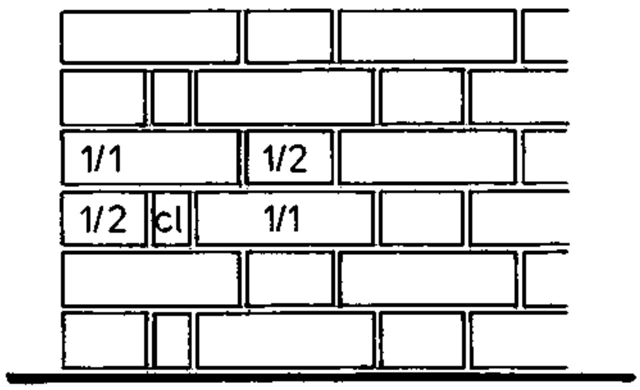

Flemish bond: each course consists of alternate headers and stretchers, its appearance is considered to be better than English bond but it is not quite so strong. This bond requires fewer facing bricks (than Engl. bond) needing only 79 bricks/m^2 (Engl. bond: 89 bricks/m^2).

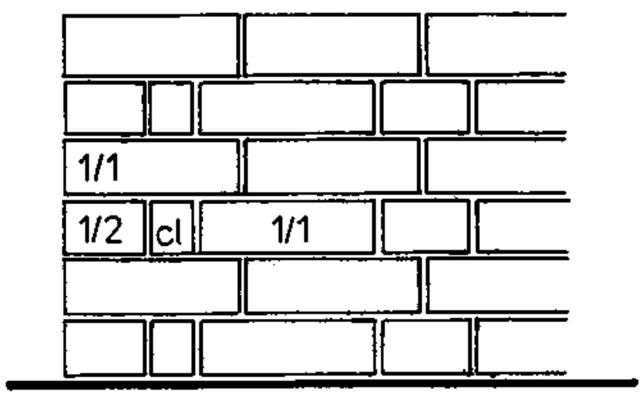

Monk bond: Consists of 2 stretchers to 1 header in each course. The header is laid centrally over the cross-joint between 2 stretchers in the course below.

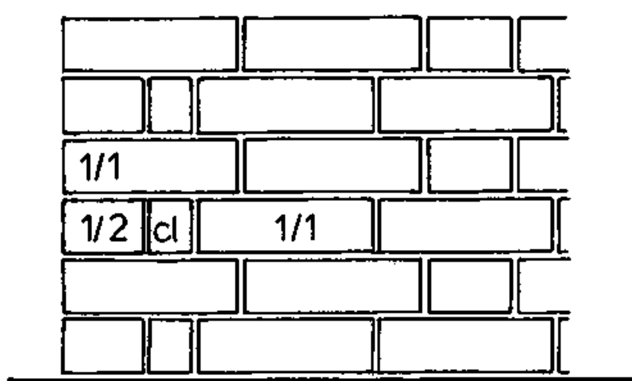

Flemish garden wall bond: = 1 header/3 stretchers in every course.

This bond is fairly economical in facing bricks and has a pleasing appearance.

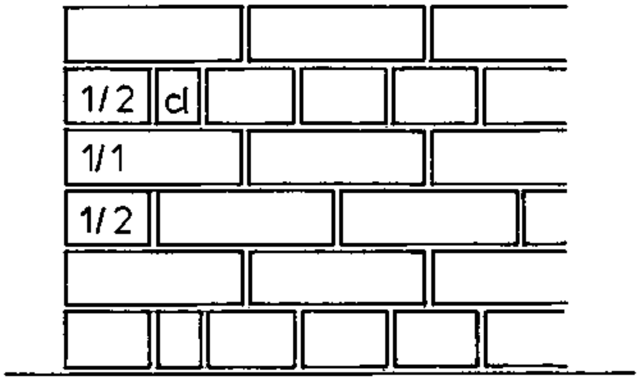

<u>English garden wall bond:</u> = 3 courses of stretchers/1 course of headers.

<u>Special bonds:</u>
Rat-trap bond (brick on edge b)
Quetta bond (1 1/2 brick walls)
(Fig. II.15)

RAT-TRAP BOND

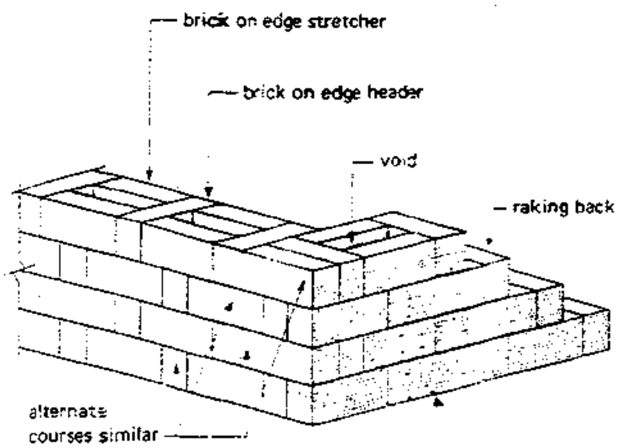

QUETTA BOND

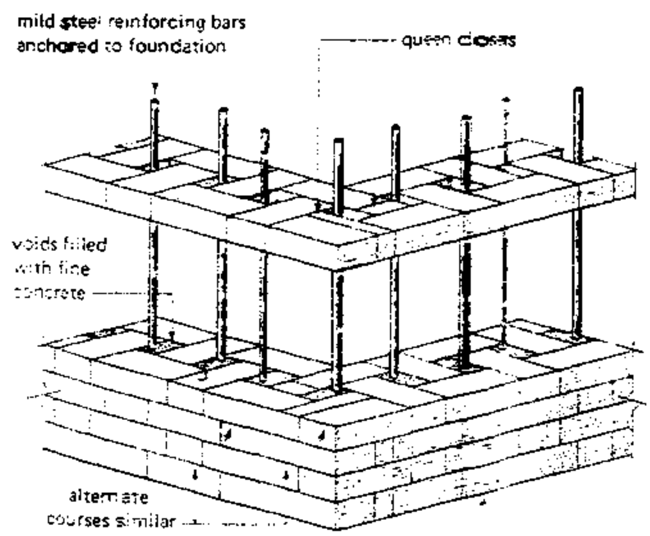

ISOMETRIC VIEW OF :

A ENGLISH BOND
B -II- -II-
C -II- -II-
D FLEMISH BOND
E -II- -II-
F -II- -II-
G ENGLISH GARDEN WALL BOND
H FLEMISH -II- -II- -II-
J RAT TRAP BOND

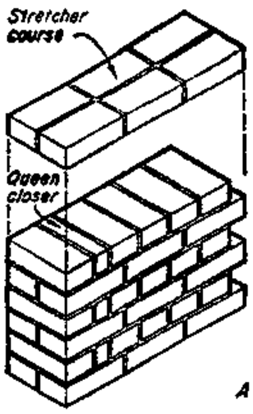

A
One-brick wall in English bond and stopped end

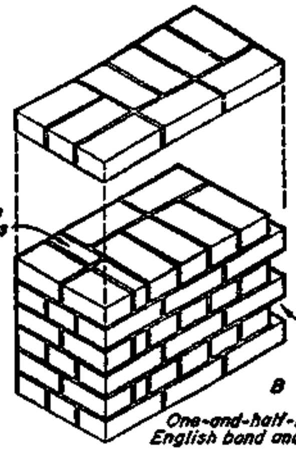

B
One-and-half-brick wall in English bond and stopped end

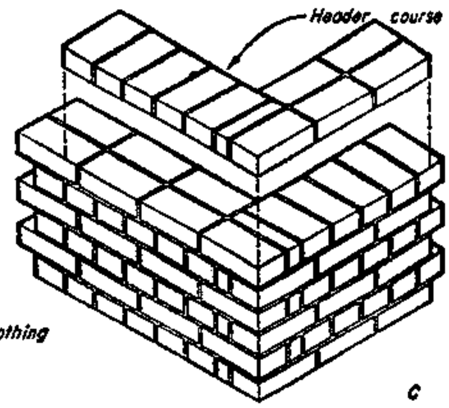

C
One-brick wall in English bond and quoin

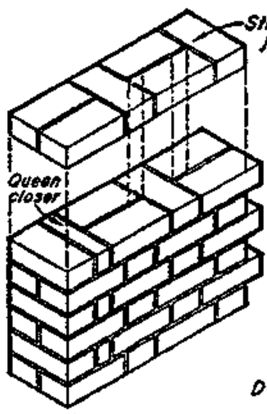

D
One-brick wall in Flemish bond and stopped end

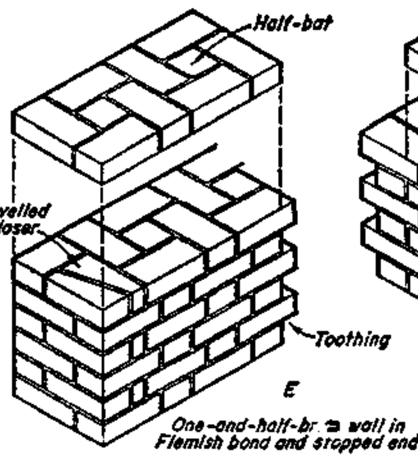

E
One-and-half-brick wall in Flemish bond and stopped end

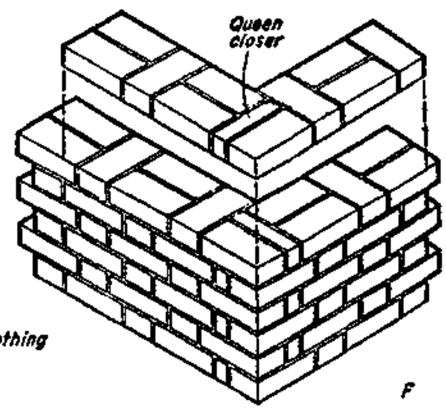

F
One-brick wall in Flemish bond and quoin

G
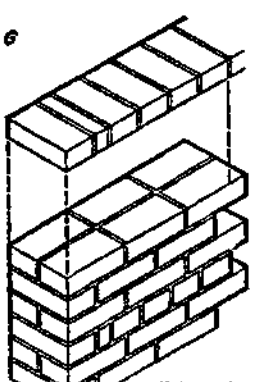
English garden wall bond

H
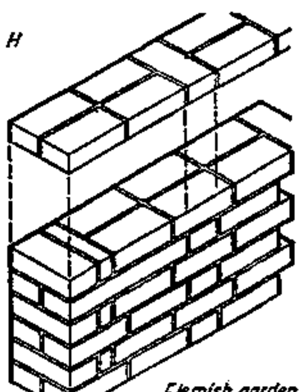
Flemish garden wall bond

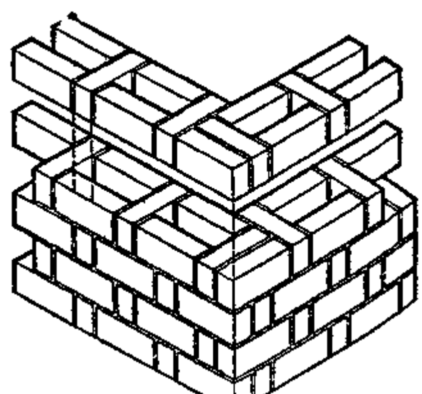
Rat-trap bond
J

6.WALLS	BRICKWORK	BUILDING CONSTR.
compiled: D.VOLKE		LECTURE
JULY '80		CET 3031/16.5 49

METRIC

6.5.9 Metric Modular Brickwork

- The standard format brick does not fit reasonably well into the system of dimensional co-ordination with its preferred dimension of 300 mm, therefore METRIC MODULAR BRICKS have been designed (4 different formats).
  (Fig. II.16)

  - 300 x 100 x 100
  - 300 x 100 x 75

  - 200 x 100 x 100
  - 200 x 100 x 75

- The bond arrangements are similar to the well-known bonds but are based on
  THIRD BONDING: overlap = 1/3 of a brick (not 1/4 as with stand. form. bricks).

BRITISH STANDARD

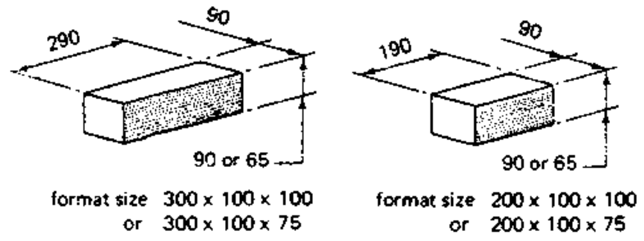

Metric Modular Bricks

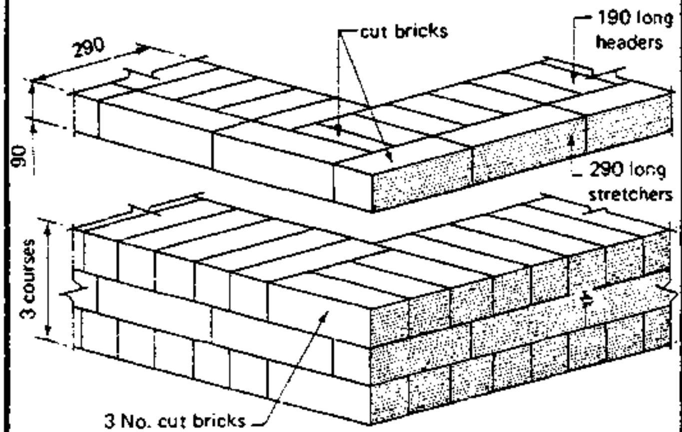

Header and Stretcher Bond

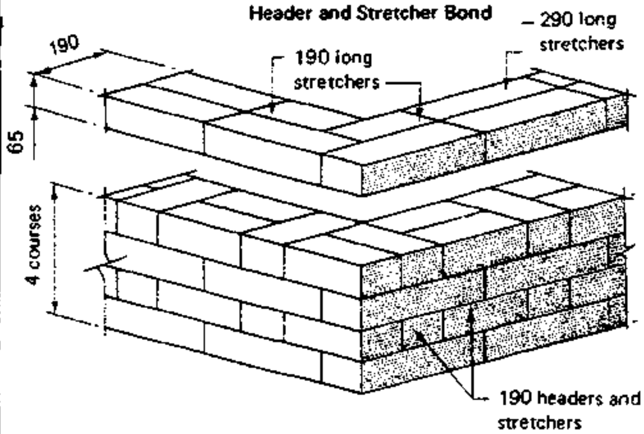

Header Stretcher Bond

GERMAN METRIC MODULAR SYSTEM

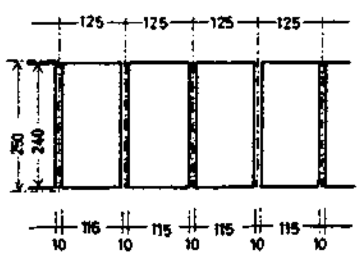

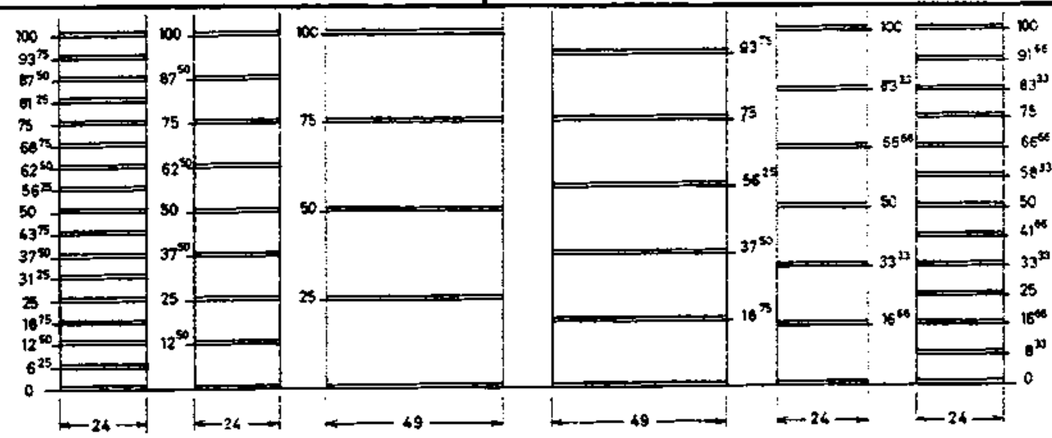

JUNCTIONS

6.5.10 Junctions

- Junctions are classified into
  - o right-angled junctions and
  - o squint junctions.
- There are 2 forms of right-angled junctions:
  - o tee-junctions and
  - o cross junctions (or intersections)
- The examples shown in the figures are only few of several methods of bonding at junctions. The essential requirements are the avoidance of continous vertical joints with the employment of the minimum number of cut bricks.

tee junctions

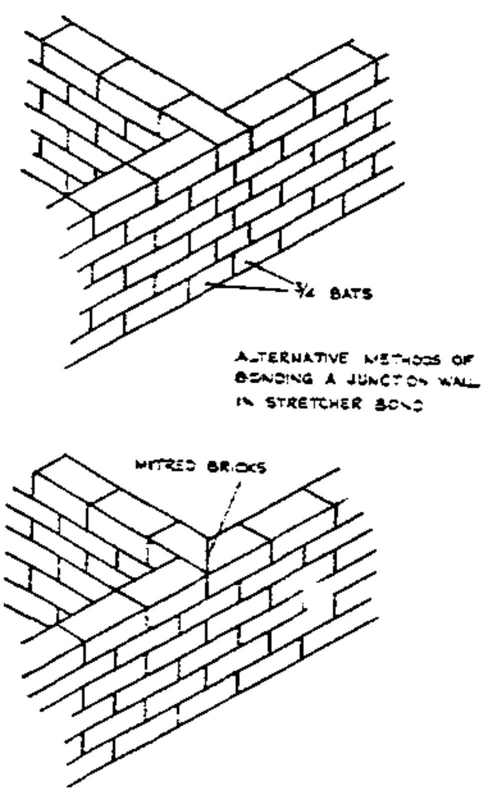

STRETCHER BOND

TEE-JUNCTION WALLS IN
ENGLISH BOND

COURSE 1 | COURSE 2

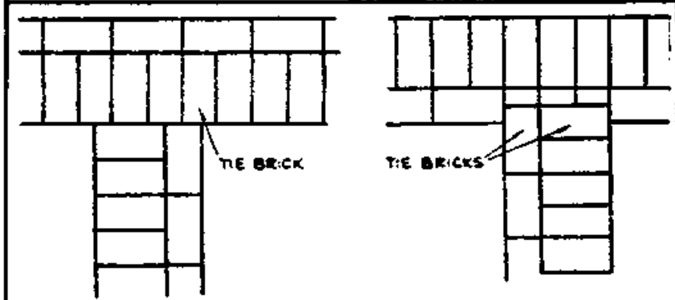

1 1/2- BRICK JUNCTION WALL

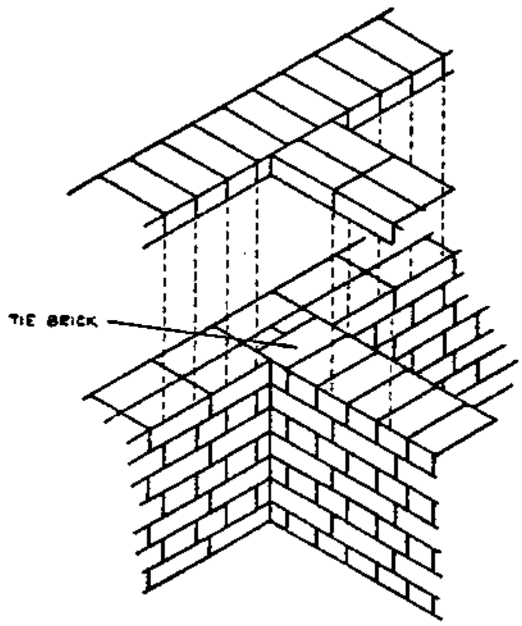

1-BRICK JUNCTION WALL ADJOINING A 1-BRICK MAIN WALL (ISOMETRIC VIEW)

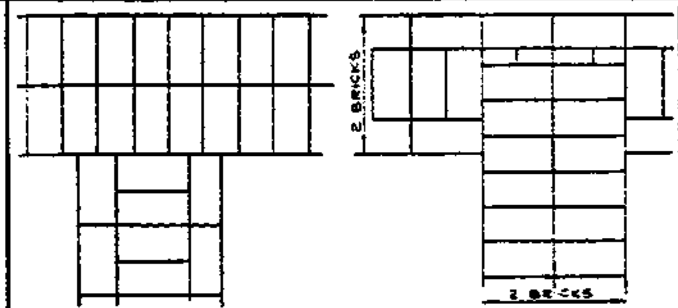

2-BRICK JUNCTION WALL

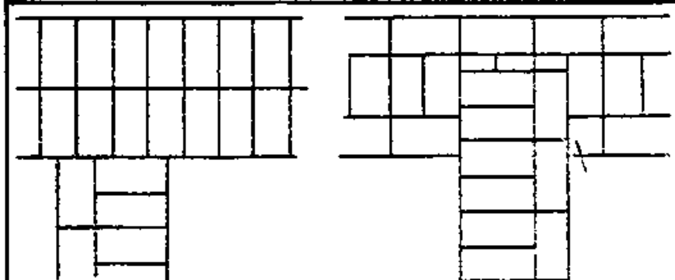

1 1/2- BRICK JUNCTION WALL INTO A 2 BRICK MAIN WALL

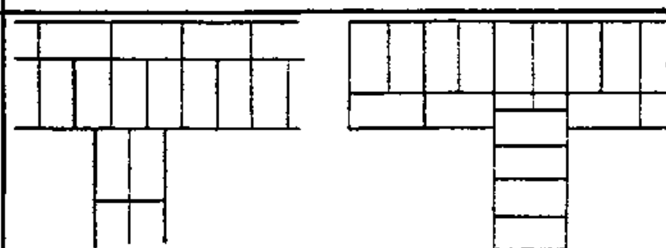

1 BRICK JUNCTION WALL INTO A 1 1/2 BRICK MAIN WALL

TEE-JUNCTION WALLS IN

FLEMISH BOND

COURSE 1 COURSE 2

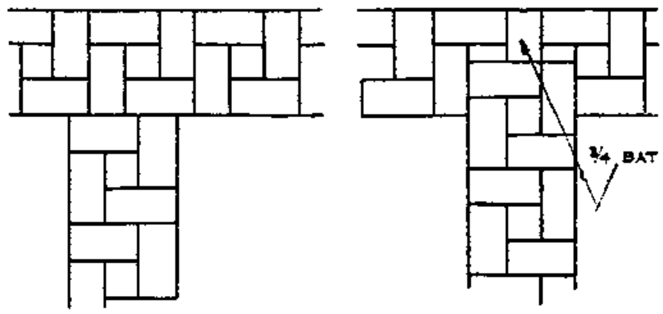

1 1/2-BRICK JUNCTION WALL

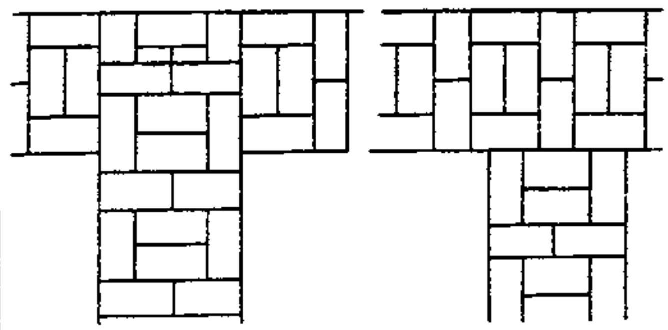

1-BRICK JUNCTION WALL ADJOINING A 1-BRICK MAIN WALL

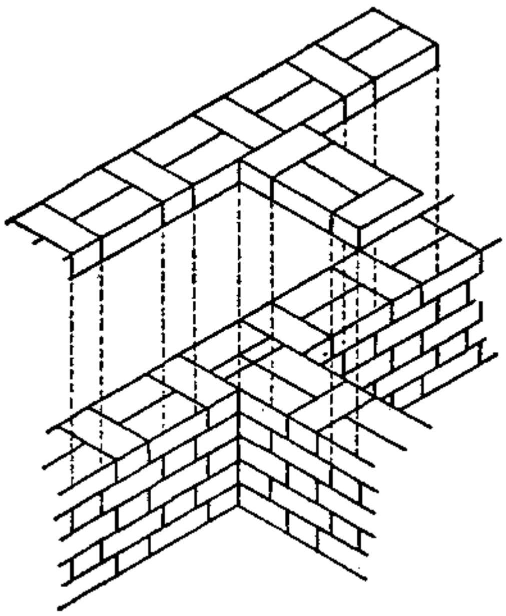

2-BRICK JUNCTION WALL

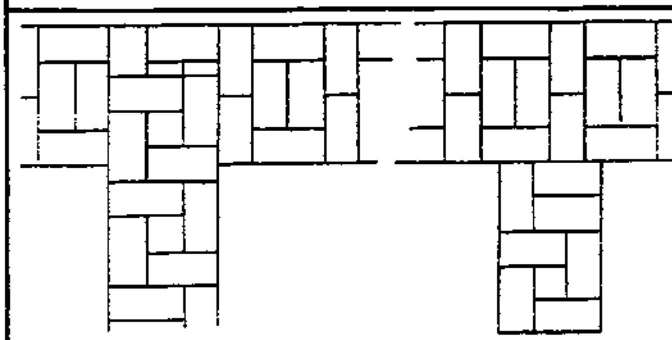

1 1/2 BRICK JUNCTION WALL INTO A 2 BRICK MAIN WALL

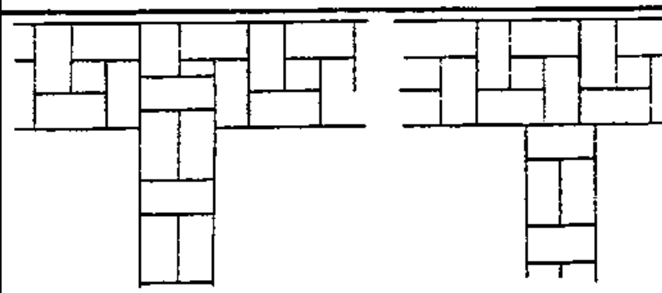

1 BRICK JUNCTION WALL INTO A 1 1/2 BRICK MAIN WALL

CROSS JUNCTION WALLS IN ENGLISH BOND

COURSE 1 COURSE 2

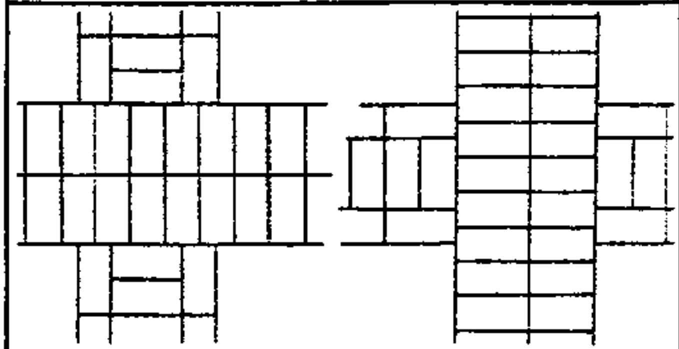

2-BRICK CROSS-WALL

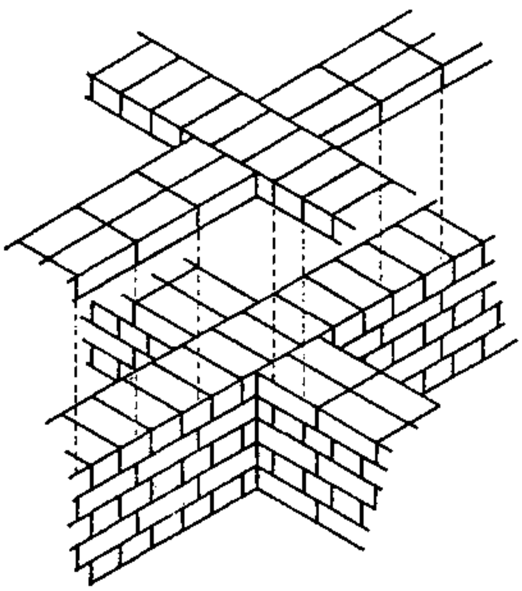

1-BRICK CROSS-WALL

(ISOMETRIC VIEW)

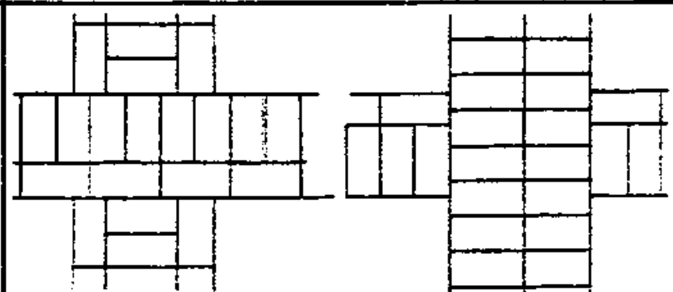

2-BRICK WALL CROSSING A 1 1/2-BRICK WALL

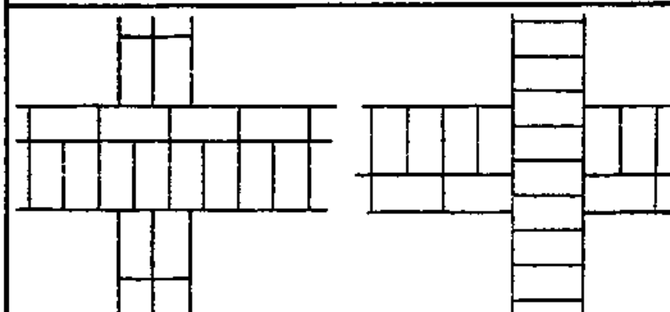

1-BRICK WALL CROSSING A 1 1/2 BRICK WALL

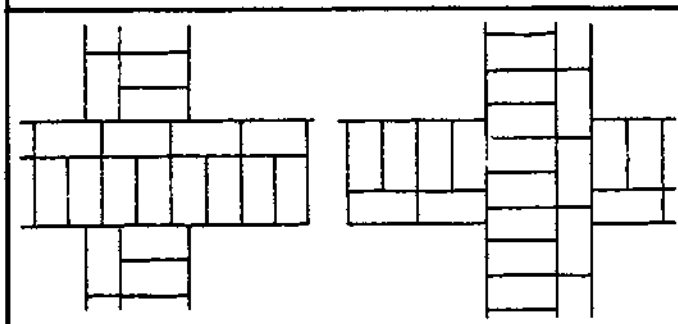

1 1/2-BRICK CROSS-WALL

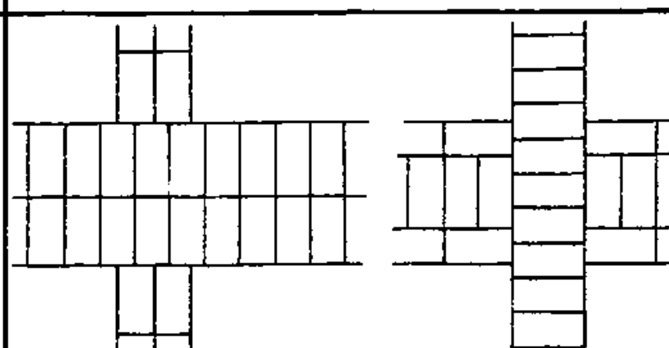

1-BRICK WALL CROSSING A 2 BRICK WALL

6.WALLS compiled: D.VOLKE JULY '80	BRICKWORK	BUILDING CONSTR. — LECTURE — CET 3031/16.5 54

CROSS JUNCTION WALLS IN

FLEMISH BOND

COURSE 1 COURSE 2

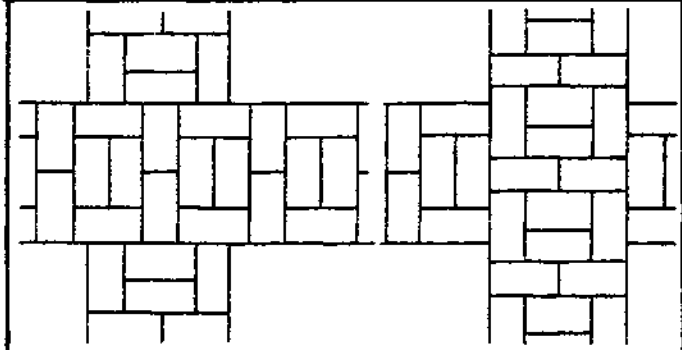

2-BRICK CROSS-WALL

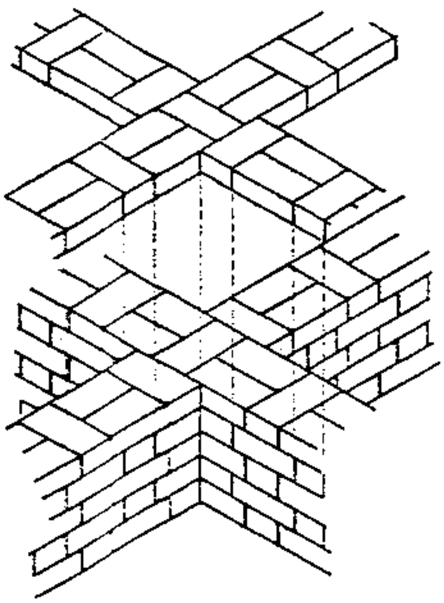

1-BRICK CROSS WALL

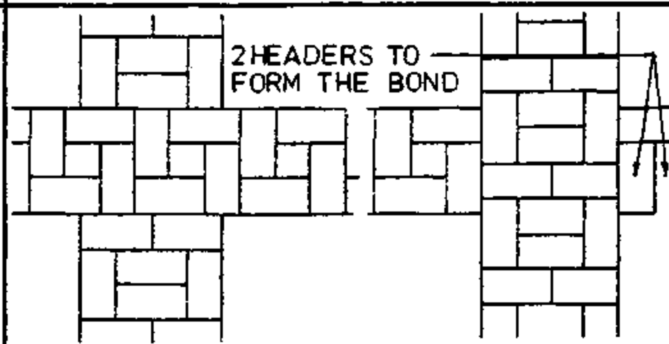

2-BRICK WALL CROSSING A 1 1/2-BRICK WALL

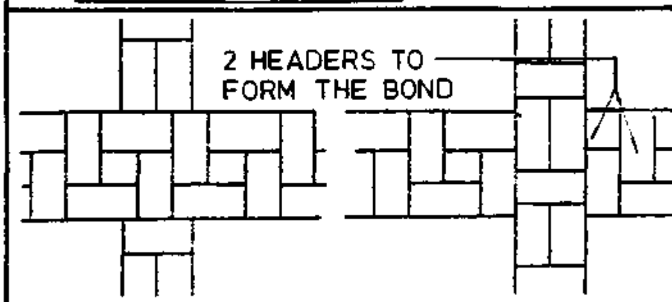

1-BRICK WALL CROSSING A 1 1/2-BRICK WALL

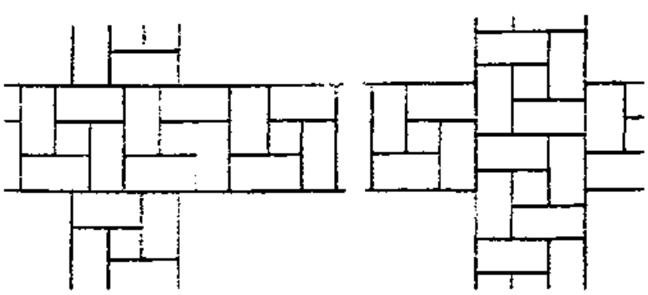

1 1/2-BRICK CROSS WALL

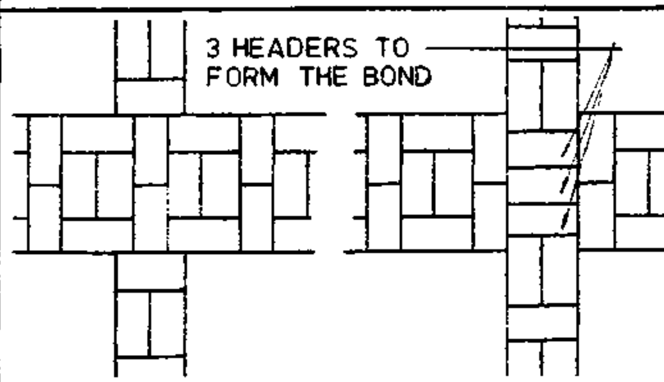

1-BRICK WALL CROSSING A 2-BRICK WALL

QUOIN: 1/2 BRICK STRETCHER BOND

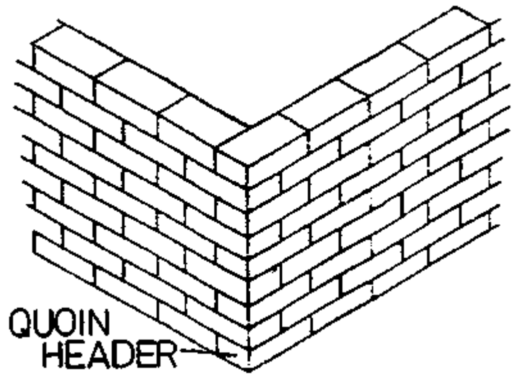

QUOIN: 1 BRICK HEADER BOND

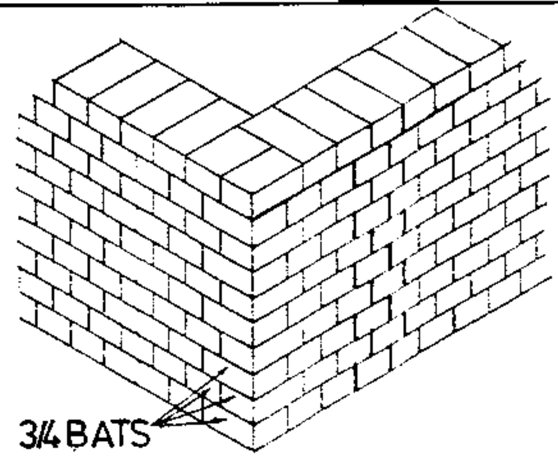

QUOIN: 1 BRICK ENGLISH BOND

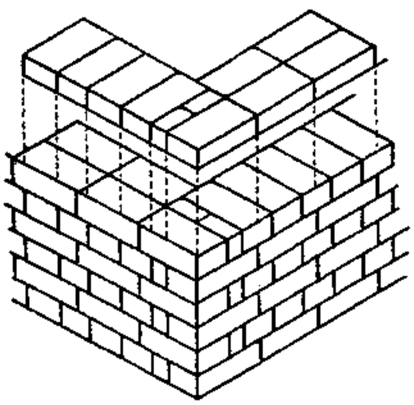

QUOIN: 1 BRICK FLEMISH BOND

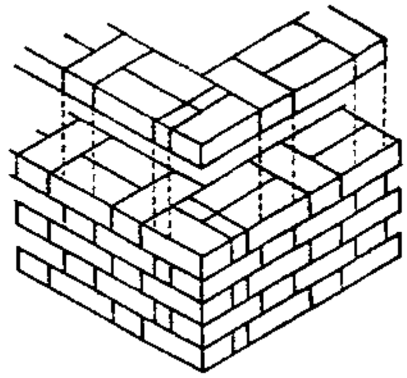

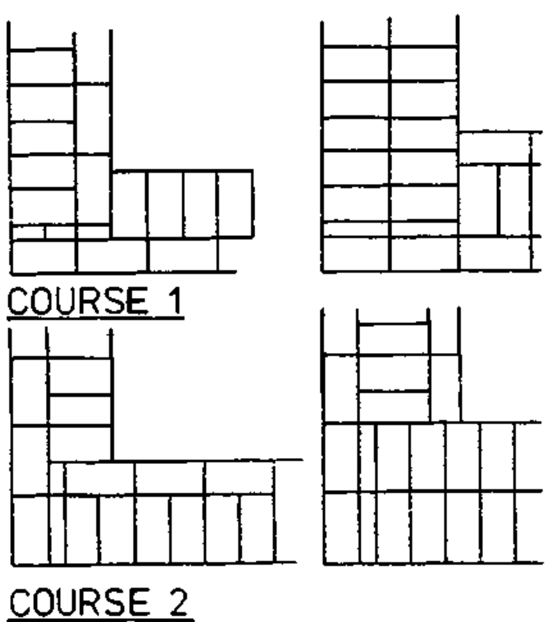

1 1/2 BRICK   2 BRICKS

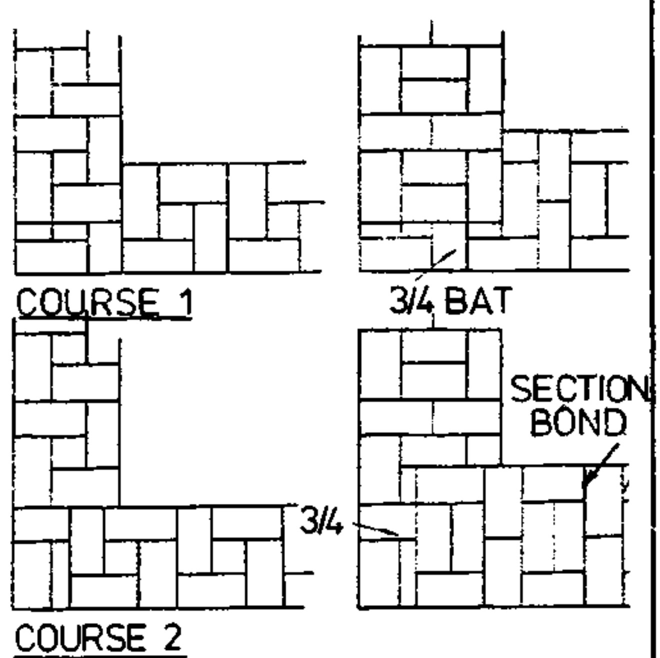

1 1/2 BRICK   2 BRICKS

6.WALLS compiled : D.VOLKE JULY '80	BRICKWORK	BUILDING CONSTR. — LECTURE — CET 3031/16.5 56

TCA	TECHNICAL COLLEGE ARUSHA CHUO CHA UFUNDI ARUSHA	CIVIL ENGINEER DEPARTMENT	56

QUOINS

6.5.11 Quoins or External Angles

- There are two forms of quoins:
  - o right-angled (or square) quoins and
  - o squint quoins.

- A right-angled quoin is formed by two walls which meet at 90°, squint quoins are of two forms:
  - (a) obtuse quoins (internal angle greater than 90°)
  - (b) acute squint quoins (internal angle less than 90°).

QUOIN

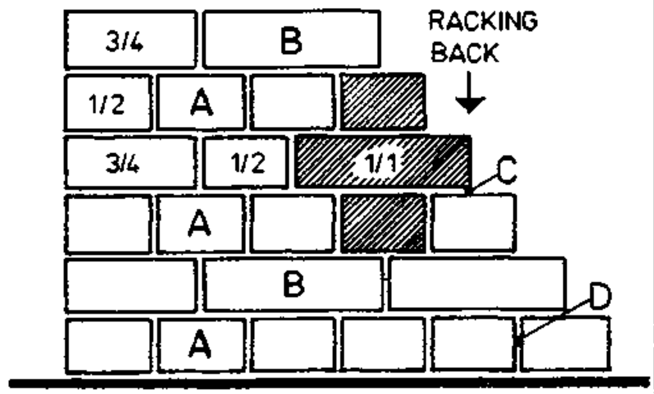

CROSS BOND

QUOIN

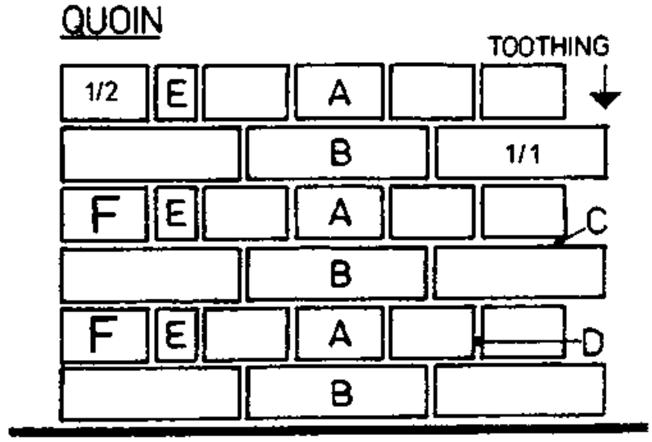

ENGLISH BOND

A HEADING COURSE
B STRETCHING COURSE
C BED JOINT
D VERTICAL JOINT
E QUEEN CLOSER
F QUOIN HEADERS

PIERS

6.5.12 Piers (also known as pillars or columns) of brickwork are adopted either to support concentrated loads or to strengthen walls. Such piers may be isolated (detached) or attached to walls.

- The keyplan below shows a portion of a building in which piers are employed.
  (A) detached piers
  (B) attached piers.

6.5.12.1 Detached piers: may be either square, rectangular, circular or polygonal on pla. The figures below show some alternate details of detached piers
(1) English bond
(2) Double flemish bond
Piers may be formed with rounded arrises by using bullnose bricks.

6.5.12.2 Attached Piers (or Pilasters).
The figures below show some alternate plans of attached piers.
(1) English bond
(2) Double flemish bond.
The width of a pier is usually a multiple of 112 mm and the projection may be either 112 mm, 225 mm or upwards.

6.5.12.3 BUTTRESSES are piers which are provided to resist thrusts from roof trusses or to strengthen boundary walls, etc.

- Examples of buttress cappings are illustrated in the fig. below.

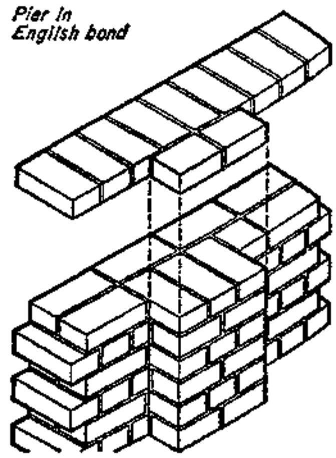

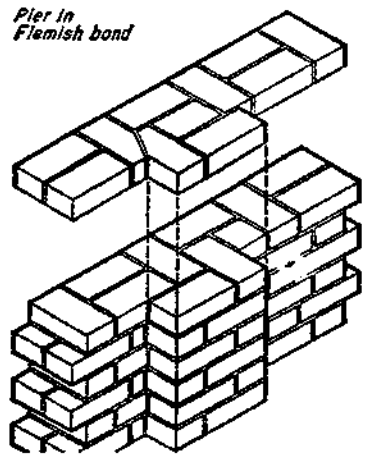

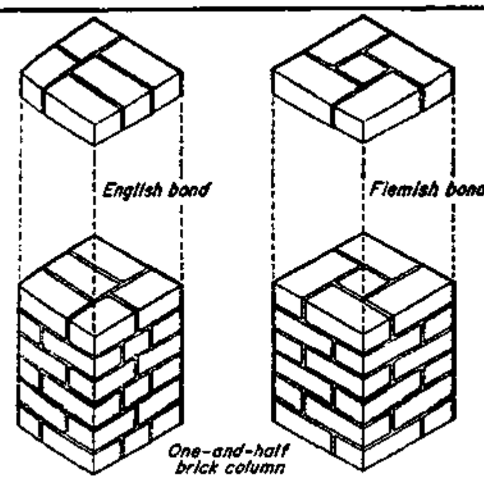

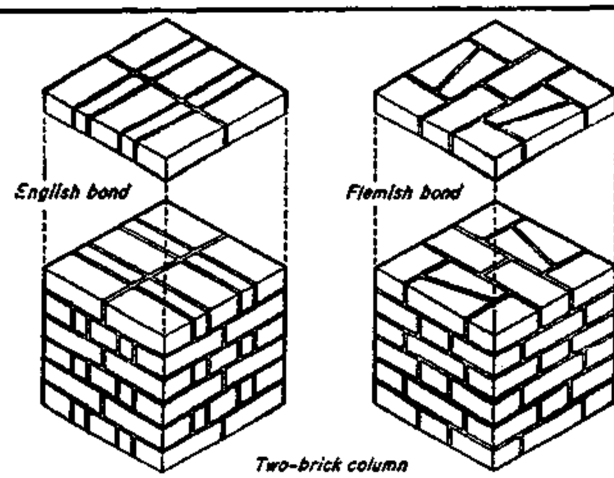

STOPPED ENDS

ENGLISH BOND

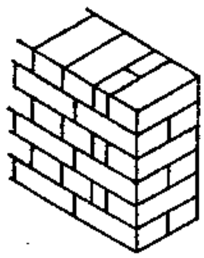

1-BRICK WALL

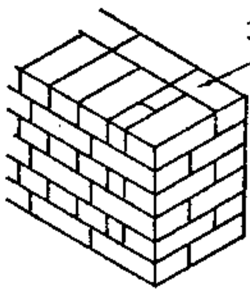

3/4 BAT

1 1/2-BRICK WALL
BOND ON THE END NOT VISIBLE

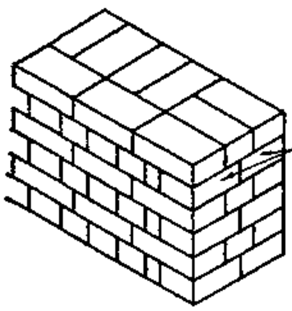

3/4 BATS

1 1/2-BRICK WALL
BOND ON THE END VISIBLE

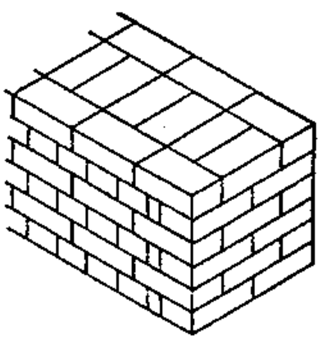

2-BRICK WALL
BOND ON THE END NOT VISIBLE

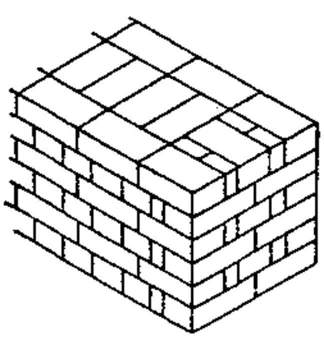

2-BRICK WALL
BOND ON THE END VISIBLE

FLEMISH BOND

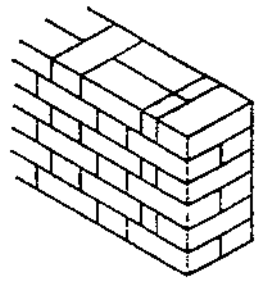

1-BRICK WALL

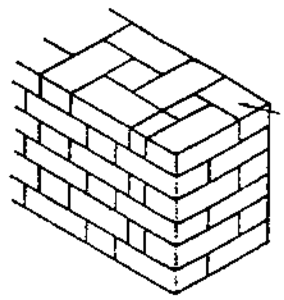

3/4 BAT TO MAINTAIN SECTIONAL BOND

1 1/2-BRICK WALL

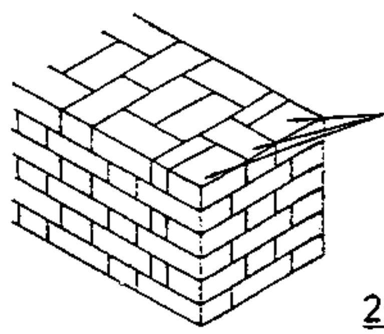

3/4 BATS

2-BRICK WALL

6.WALLS compiled: D.VOLKE JULY '80	BLOCKWORK	BUILDING CONSTR. LECTURE CET 3031/16.5 59
TCA TECHNICAL COLLEGE ARUSHA CHUO CHA UFUNDI ARUSHA	CIVIL ENGINEER DEPARTMENT	59

DECORATIVE BRICKWORK

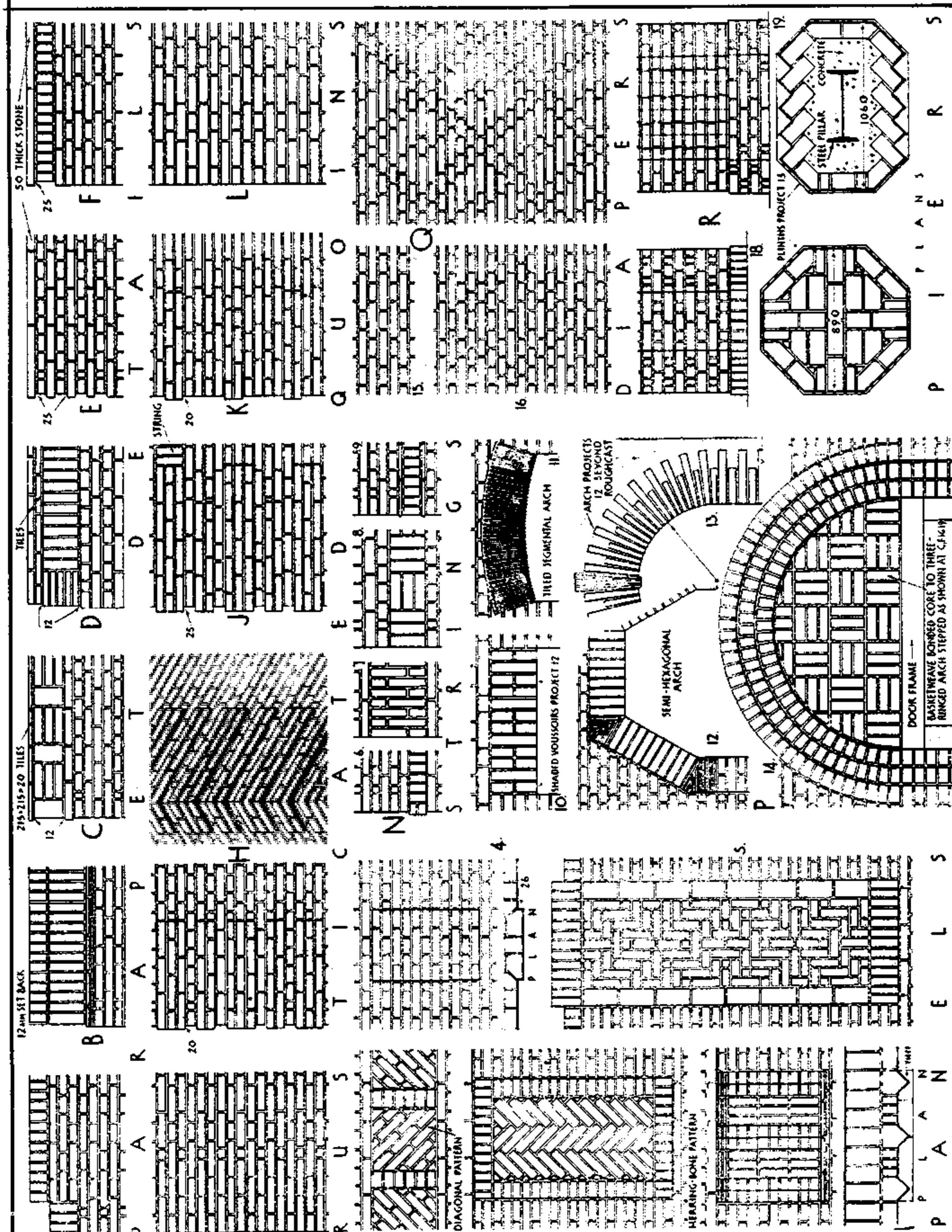

6.WALLS compiled : D.VOLKE JULY '80	BRICKWORK	BUILDING CONSTR. — LECTURE — CET 3031 / 16.560
TCA TECHNICAL COLLEGE ARUSHA CHUO CHA UFUNDI ARUSHA	CIVIL ENGINEER DEPARTMENT	60

JOINTING & POINTING

Joint and pointing

- These termes are used for the finish given to both the
  - vertical and
  - horizontal joints in brickwork

  irrespective of whether the wall is of brick, block, solid or cavity construction.

FLUSH JOINT
KEYED JOINT
RECESSED JOINT
WEATHERED POINTING
(strong cem. mt. mix)
WEATHERED JOINT
RACKED OUT JOINT

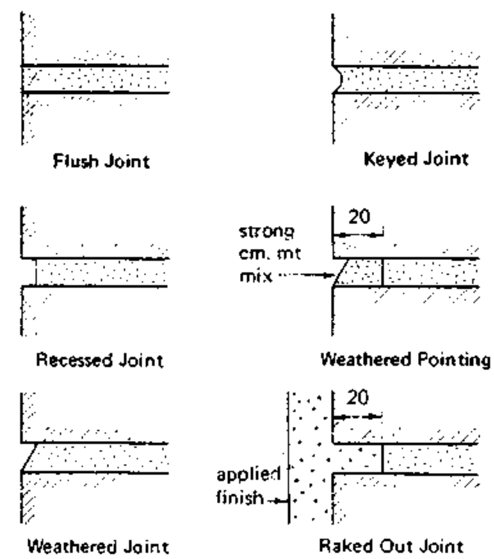

- Jointing is the finish given to the joints when carried out as the work proceeds.
- Pointing is the finish given to the joints by raking out to depth of approx. 20mm and filling in on the face with a hard setting cement mortar which could have a colour additive.

This process can be applied to both new and old buildings.

6.6 Blockwork

- A block is defined in BS 2028 as a walling unit exceeding the dimensions specified for bricks given in BS 3921 and that its height shall not exceed either its length or six times its thickness to avoid confusion with slabs or panels. Blocks are produced from clay, precast concrete and aerated concrete.

6.6.1 Clay Blocks

- These are covered by BS 3921 which gives a format size of 300 x 225 x 62·5; 75, 100 or 150 mm wide. These blocks, which are hollow, are made by an extrusion process and fired as for clay bricks. The standard six cavity block is used mainly for the inner skin of a cavity wall, whereas the three block is primarily intended for partition work. Special corner, closer, fixing and conduit blocks are produced to give the range good flexibility in design and layout. Typical details are shown in Fig. II.19.

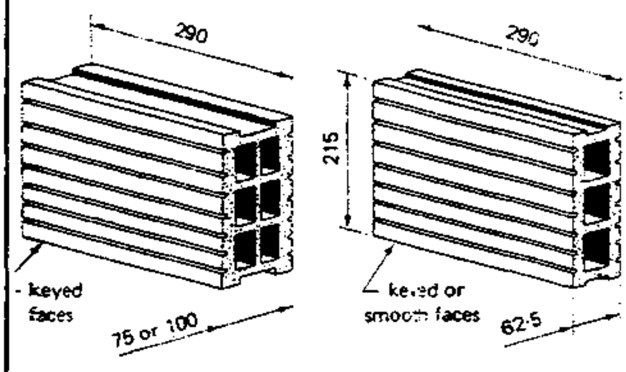

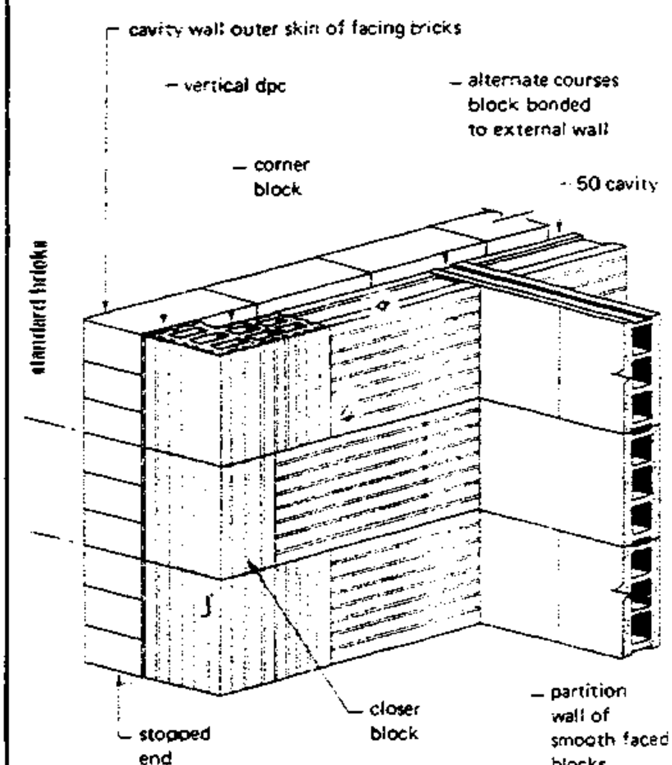

PRECAST CONCR. BLOCKS

6.6.2 Precast concrete Blocks

- The manufacture of precast concrete and aerated concrete blocks is covered by B.S.2028: 1364 which gives three types:

Type A: for general use in buildings including the use below B.L. - D.P.C. Suitable aggregates are dense aggregates such as crushed gravel, crushed slag, broken brick.

Type B: for general use in buildings. Lightweight concrete blocks for load bearing walls.
Suitable aggregates include
- sintered pulverized fuel ash,
- foamed slag
- expanded clays and shalls
- furnace clinker
- expanded vermeculite and aerated concrete.

Type C: = similar to Type B but are intended for non load bearing walls.

6.6.3 Aerated Concrete Blocks

- Aerated concrete for blocks is produced by introducing air or gas into the mix so that when set a uniform cellular block is formed.

- The usual method: A controlled amount of aluminium powder to the mix reacts with the free lime in the cement to give off hydrogen which is quickly replaced by air and so provides an aeration.

AERATED CONCR. BLOCKS

PRECAST CONCR. BLOCKS

- Precast concrete blocks are manufactured to a wide range of standard sizes. The most common face format sizes are:
  400 x 200 mm and
  450 x 225 "
  with a thickness of 75/100/140/215 mm. (Typical details: Fig. II.20)
- Concrete blocks are laid in <u>stretcher bond</u>, and are joined to other walls by <u>block bonding</u> or leaving <u>metal ties</u> or <u>strips</u> projecting from suitable bed courses. The mortar again should be weaker than the material of the walling unit. (1:2:9 gauged mix. for work above G.L.)
- Concrete blocks shrink on drying out. They should not be laid until the initial drying shrinkage has taken place. (About 14 days) and should be protected on site to prevent them becoming wet, expanding and causing subsequent shrinkage possibly resulting in cracking of the blocks and any applied finishes (such as plaster).

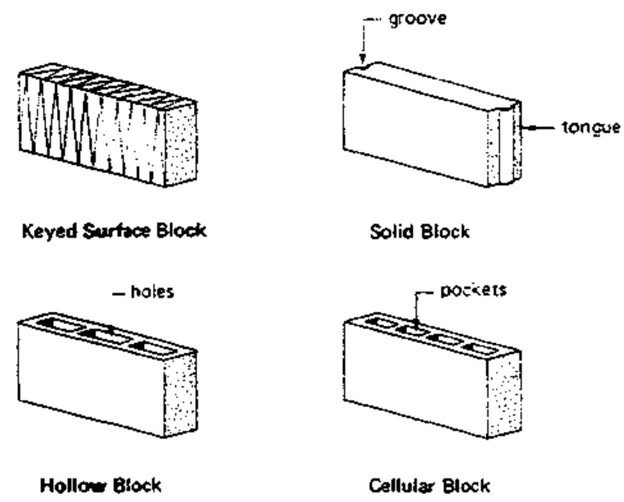

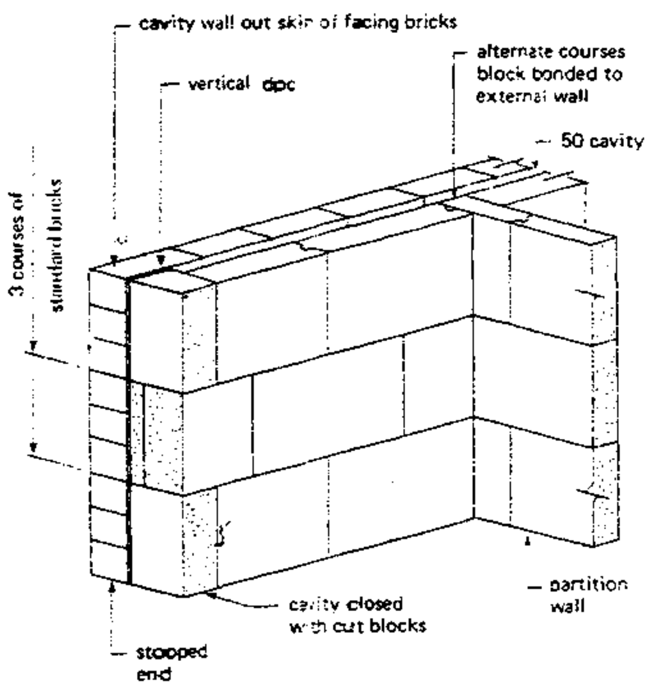

- The main <u>advantages</u> of blockwork over brickwork are:
  1. Labour saving - easy to cut, larger units.
  2. Easier fixings - most take direct fixing of screws and nails.
  3. Higher thermal insulation properties.
  4. Lower density.
  5. Provide a suitable key for plaster and cement rendering.
- The main <u>disadvantages</u> are:
  1. Lower strength.
  2. Less resistance to rain penetration.
  3. Load bearing properties less (one-or two-storey application.)
  4. Lower sound insulation properties.

EXAMPLES : CORNERS & TEE–JUNCT's. in BLOCKWORK–BONDING

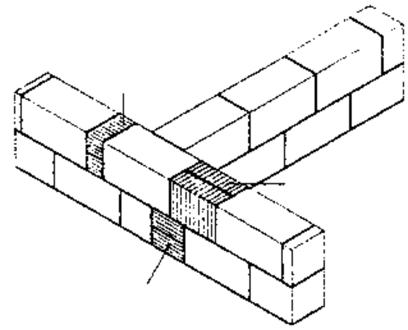

TEE–JUNCTION : 24 in 24 cm wall

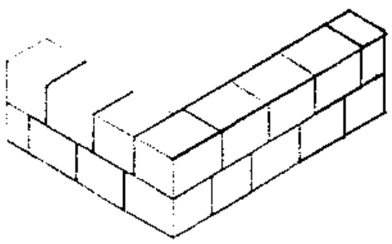

CORNER : 30 in 30 cm wall

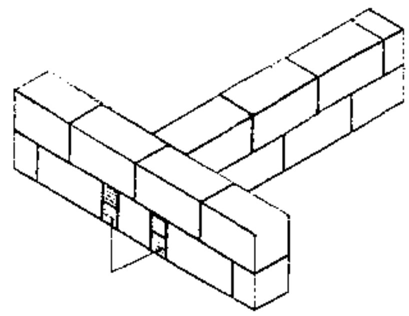

TEE–JUNCTION : 24 in 24 cm wall

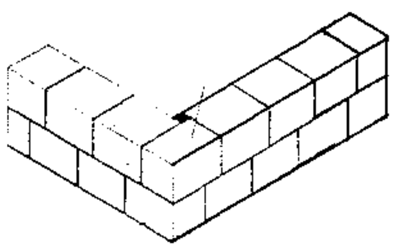

CORNER : 30 in 30 cm wall

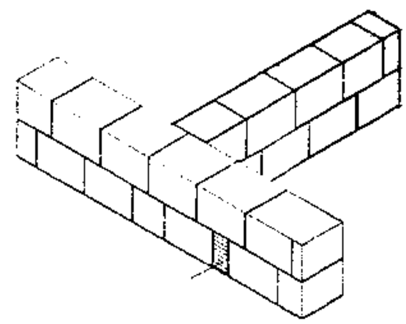

TEE–JUNCTION : 24 in 24 cm wall

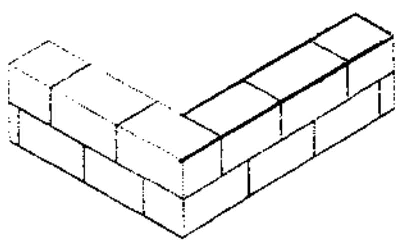

CORNER : 30 in 30 cm wall

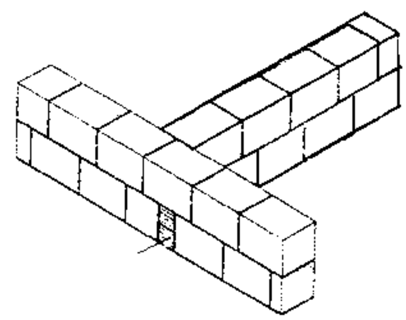

TEE–JUNCTION : 24 in 24 cm wall

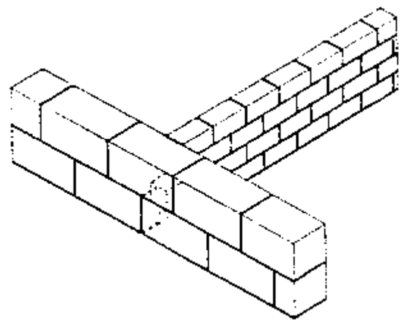

TEE–JUNCTION : 11^5 in 24 cm wall

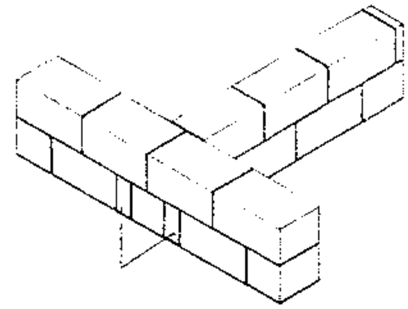

TEE–JUNCTION : 24 in 30 cm wall

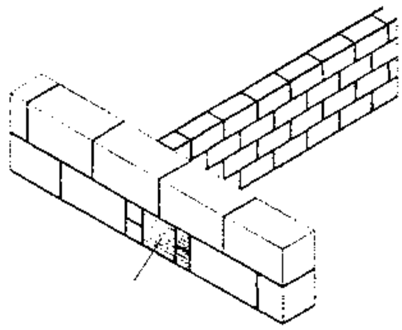

TEE–JUNCTION : 11^5 in 24 cm wall

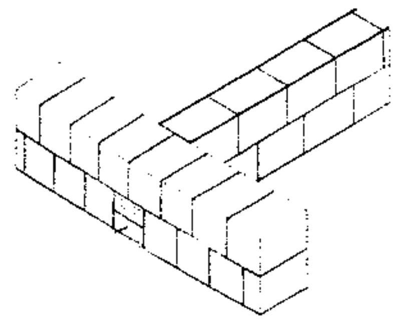

TEE –JUNCTION : 24 in 36^5 cm wall

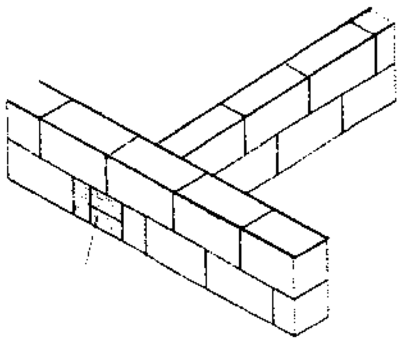

TEE–JUNCTION : 17^5 in 24 cm wall

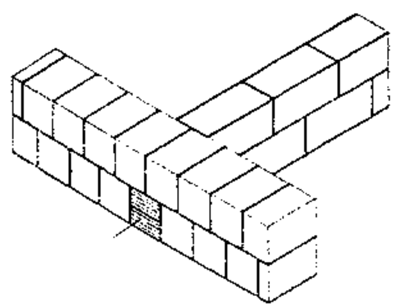

TEE–JUNCTION : 24 in 36^5 cm wall

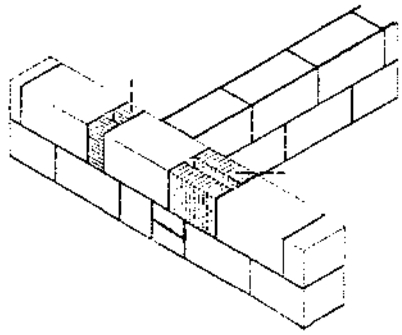

TEE–JUNCTION : 24 in 30 cm wall

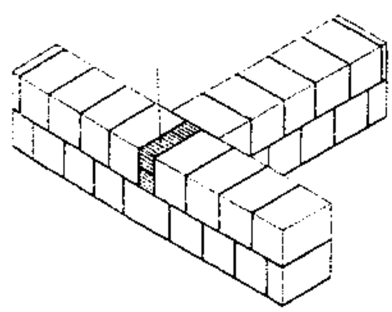

TEE–JUNCTION : 36^5 in 36^5 cm wall

CONCRETE WALLS

6.7. Concrete Walls

6.7.1 General

- Concrete Walls may be broadly classified as:
  - Plain monolithic concrete walls.
  - reinforced concrete walls

  The later can be subdivided into:

  - in-situ cast external walls
  - concrete box frame &
  - pre-cast panel structures.

- A well graded and carefully mixed and placed Cement Concrete Wall can be impervious to water:
  - small areas can be quite water proof
  - with larger areas problems of cracking arise due to shrinkage and thermal movements and to possible settlement.

- Precautions against cracking are taken by controlling shrinkage and moisture movement by:
  - steel reinforcement
  - by allowing for thermal movement by means of expansion joints and
  - by careful detailing and execution of Construction Joints.

IN SITU CAST EXTERNAL WALLS

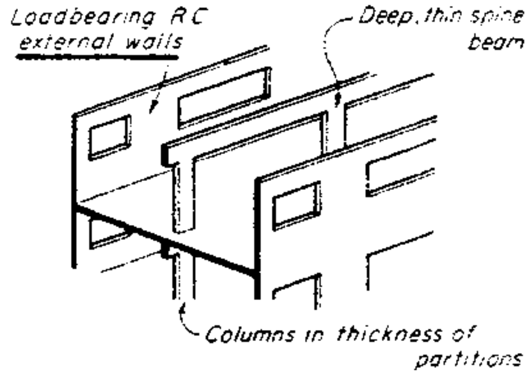

BOX FRAME STRUCT.

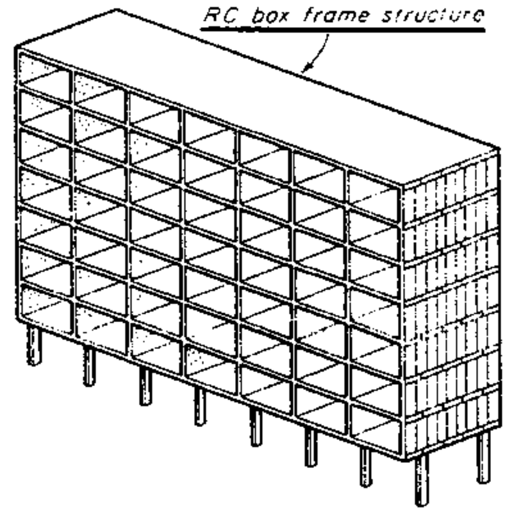

PRECAST PANELS

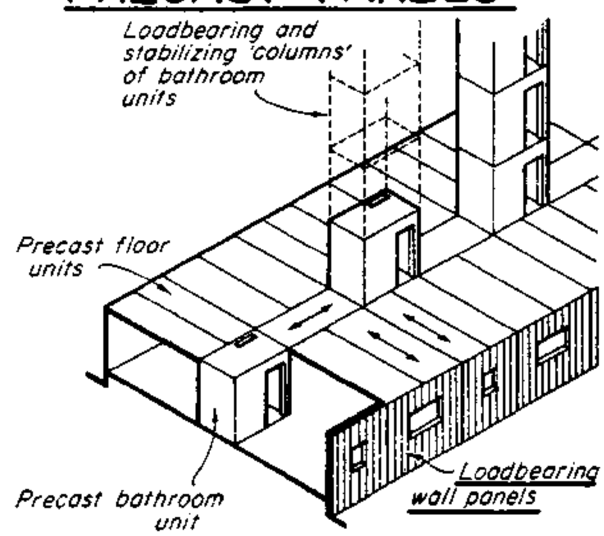

FORMWORK

6.7.2 Formwork

- Formwork is required to support the concrete until it is firm.
- It has to be strong enough to bear (without sagging, the weight of the concrete as well as the concreting sand and plant used for placing.
- The joints of the boards must be tight enough to prevent loss of water and fine material
- Easy stripping through proper use of strutting, bolting, nailing and wedging should be possible.
  In order to resist vibration and movement when the concrete is being placed, extra props may be temporarily inserted under form work. (They can be removed immediately the concrete is in position, and re-erected elsewhere as the work proceeds).
- Adjustable steel props are excellent for this purpose.
- Formwork is usually of timber, but can be of metal as well.
- Potent methods also include
  - plastic
  - wood fibre
  - metal ceiling panels
  - precast concrete panels
- Permanent steel tubular scaffolding may also be used as a support for shuttering.
- Metal formwork must be cool when concrete is being placed.
- There are a number of systems of WALL-Formwork available (in wood, steel, concrete, etc.)
  Straight foreword methods are shown in the figure.

WALL FORMWORK WITH WIRES

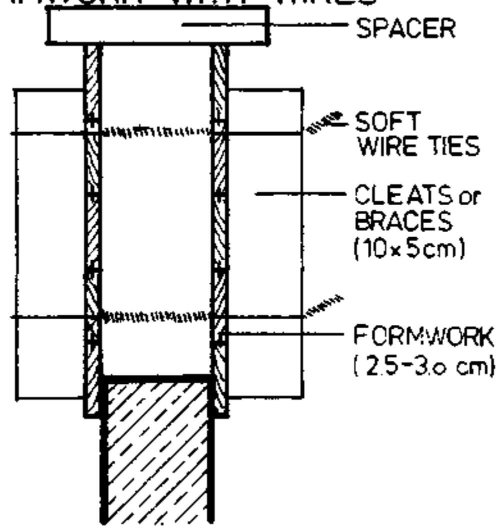

WALL FORMWORK WITH BOLTS

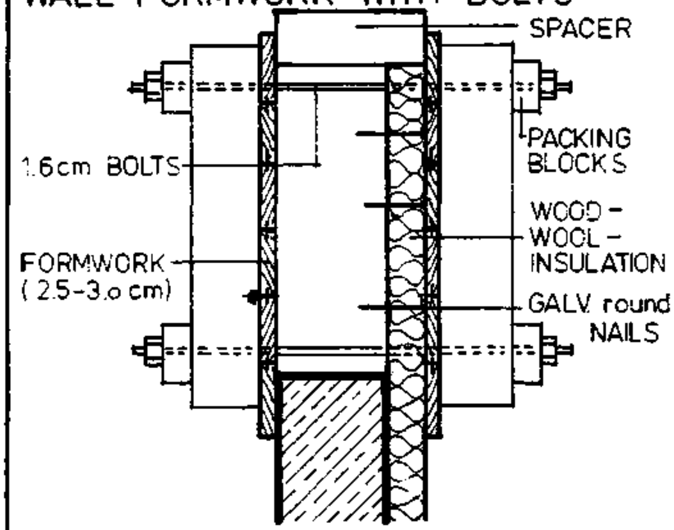

WALL FORMWORK

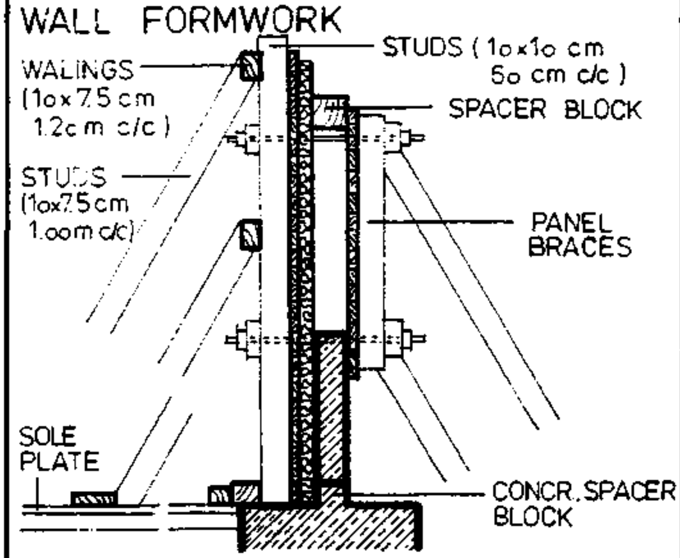

TIMBER

WALL-REINFORCEMENT

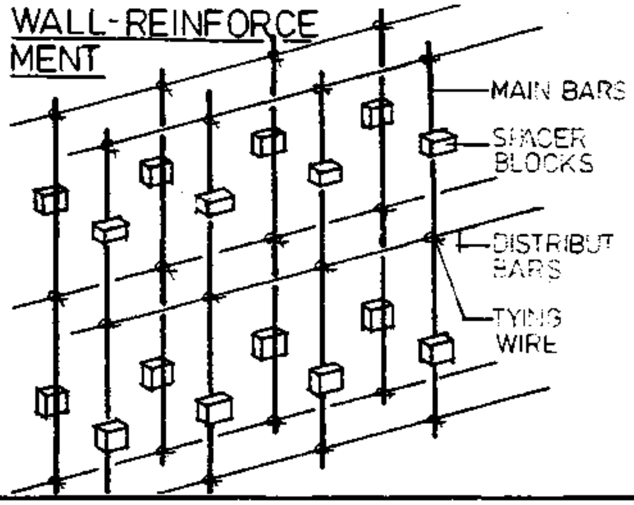

WALL FOUNDATION

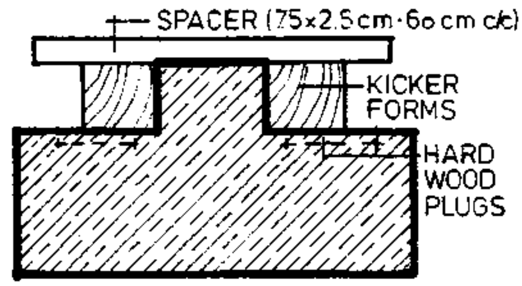

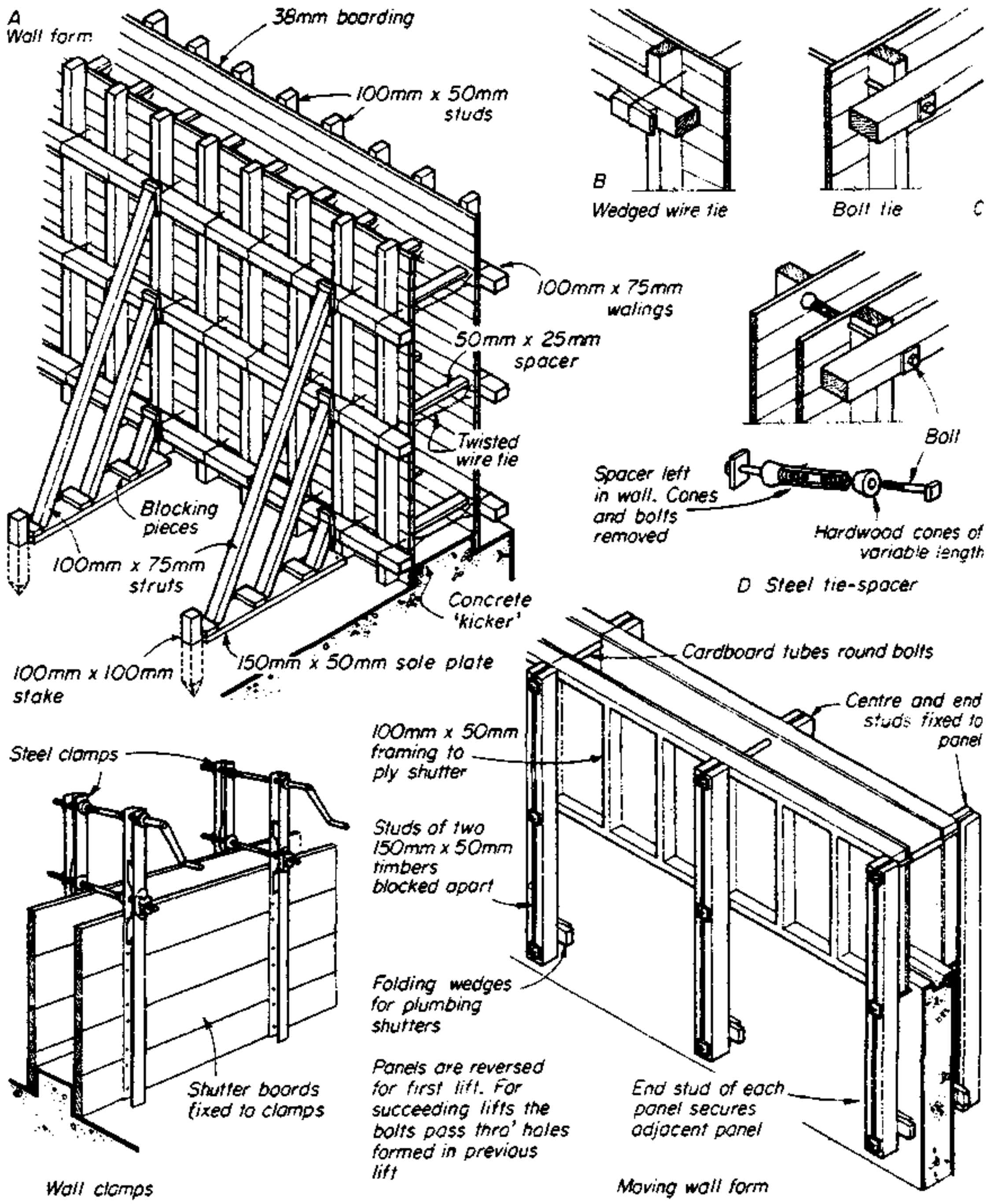

6.WALLS compiled: D.VOLKE JULY '80	CONCRETE WALLS	BUILDING CONSTR. — LECTURE — CET 3031/16.7 69

STEEL CONNECTORs

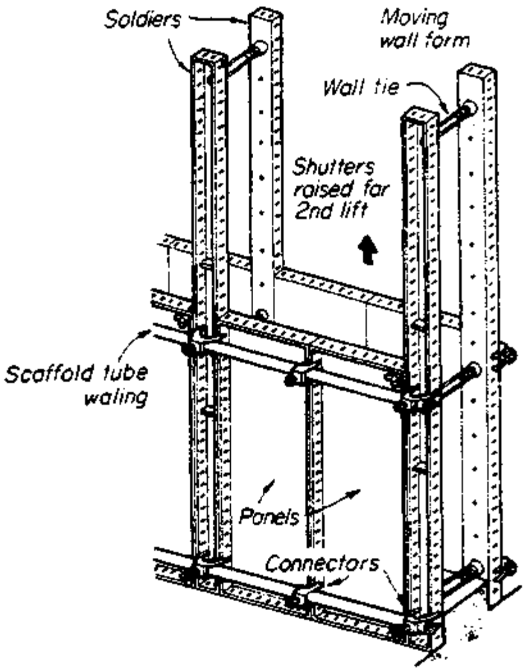

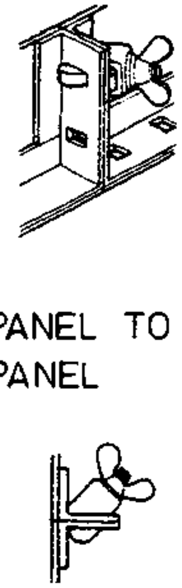

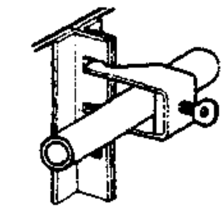

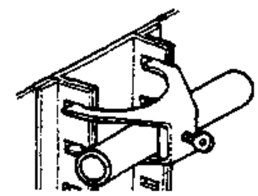

SLIP FORMs

Slip forms or sliding shutters

For the rapid construction of constant section walls it is possible to use a continuously rising form, usually known as a slip form or sliding shutter. By this means work may proceed continuously, the shutter rising from 150 to 300 mm per hour depending upon the rate of hardening of the concrete, since the cast concrete very rapidly becomes self-supporting. The form is about 900 mm or 1.20 m deep, fixed to and held apart by timber or steel frames or yokes, as shown in figure 260 *A*, *B*. On top of each yoke is fixed a hydraulic jack, through which passes a high tensile steel jacking rod, about 25 mm in diameter, which is cast into the wall as it rises. The jack contains a ram and a pair of upper and lower jaws which can grip the jacking rod and it works in cycles, each cycle giving a rise of about 25 mm. The jack works against the lower jaws to raise the yoke and the form with it. When the pressure is released, the upper jaws grip the rod and the lower jaws are released and raised under the action of a spring. An alternative to the hydraulic jack is the manually operated screw jack which is also illustrated (*C*).

A working deck is constructed level with the top of the form, from which is usually suspended a hanging scaffold from which the concrete may be inspected and rubbed down as it leaves the shutters.

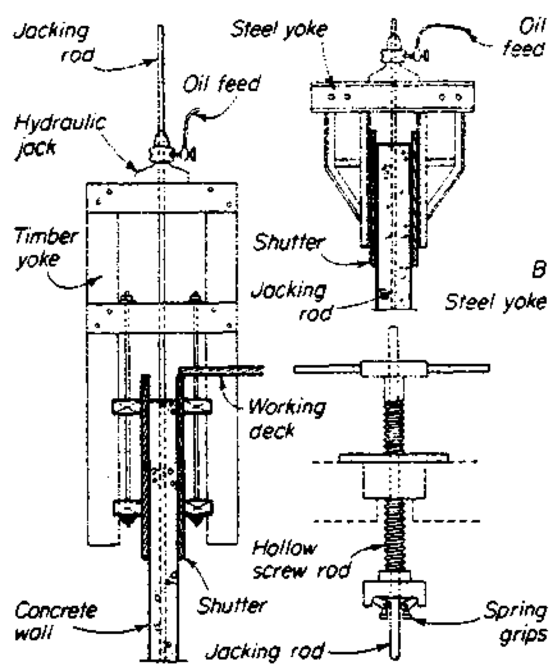

A Timber yoke Screw jack C

PLAIN MONOLITHIC CONCR.

6.7.3 Plain Monolithic Concrete Wall

- The term 'monolithic' has been taken from the Greek language:
  mono = single (
  litho = stone
  Therefore a 'monolithic wall' is erected without any joints (like brick or blockwalls) having a structure like a rock or a 'single stone'

- The ideal material for such a 'monolithic' construction is concrete. (or reinforced concrete)

- The Plain monolithic concrete wall means a wall of cast in-situ concrete containing no reinforcement - either of normal, nonfines or lightweight concrete.

- As with reinforced concrete walls they are most economic when used both to support & to enclose or divide, provided they are at reasonably close spacing. That is to say, up to about 5.5 m apart. They are, therefore, used mainly for housing of all types, both as external and internal loadbearing walls, when low building costs can be attained.

- Dense concrete is generally used for high buildings although no-fines concrete has been used for heights up to ten storeys in this country. In Europe blocks as high as 20 storeys have been constructed with no-fines loadbearing walls more cheaply than with a frame.

- Plain monolithic concrete walls suffer certain defects which, in some respects, makes them less suitable as external walls than other types. With normal dense aggregates the thermal insulation is low and the appearance of the wall surface may be unsatisfactory, requiring some form of finishing or facing. In addition the unreinforced concrete wall, and particularly the no-fines wall, is unable to accommodate itself to unequal settlement as does a reinforced wall by virtue of the reinforcement or a brick or block wall to a certain extent by the setting up of fine cracks in the joints. Thus, as a result, large cracks tend to form in the wall. Nevertheless, where foundations are designed to reduce unequal settlement to a minimum such walls can successfully be used.

- Aggregates used for dense plain concrete are natural aggregates conforming to the requirements of BS 882, air-cooled blast furnace slag and crushed clay brick. Aggreggates for light-weight concretes are foamed slag, clinker, pumice and any artificial aggregate suitable for the purpose. No-fines concrete may be composed of heavy or lightweight aggregate.

DENSE CONCr. WALLS

6.7.3.1.

Dense concrete walls are constructed from concrete made with a well-graded aggregate giving a concrete of high density. The London By-laws require, the thickness of any concrete external or party wall to be not less than 150 mm thick and CP 123, 101, 'Dense Concrete Walls', recommends a similar thickness for external walls.

In most buildings the thickness of any type of plain concrete wall must, by reason of other functional requirements, be thicker than the minimum dicteted by loadbearing requirements. An example of this is the dense concrete separating wall, which must be 175 mm thick in order to provide an adequate degree of sound insulation between houses and flats.

LIGHT WEIGHT AGGREGATES

6.7.3.2

Light-weight aggregate concrete walls will give better thermal insulation than dense concrete when used for external walls but care must be taken in the choice of aggregate for external use because of the danger of excessive shrinkage and moisture movement occuring with certain types. Clinker has a corrosive action on steel and should not be used if shrinkage reinforcement is to be incorporated.

All types of light-weight aggregate concrete are more permeable than dense concrete and where the wall is exposed to the weather a greater thickness of cover to the steel is required, with possibly the further protection of rendering. Concrete with a wide range of density and compressive strength can be obtained by the selection of appropriate aggregate and mix.

NON-FINES CONCr. WALLs

6.7.3.3 No-fines concrete walls are constructed with a concrete composed of cement and coarse aggregate alone, the omission of the fine aggregate giving rise to a large number of evenly distributed spaces throughout the concrete. These are of particular value in terms of rain exclusion. No-fines concrete is suitable for external and internal loadbearing walls or for panel wall infilling to structural frames.

The weight of no-fines concrete is about two-thirds that of dense concrete made with a similar aggregate. Aggregates graded from 19 mm down to 9.5 mm are used with mixes of 1 to 8 or 10 for gravel aggregate and 1 to 6 for light-weight aggregates. The aggregate should be round or cubical in shape and no more water should be used than that required to ensure that each particle of aggregate is thoroughly coated with cement grout without the voids being filled. The hydrostatic pressure on form work is only about one-third of that of normal concrete. This is an advantage since horizontal construction joint should be minimized and form work one or two storeys high can be employed without it being excessively heavy. Any normal type of shuttering can be used.

No-fines concrete walls should not be subjected to bending stresses nor to excessive eccentric or concentrated loads. Slender piers and wide openings are, therefore, unsuited to no-fines construction. Isolated piers should not be less than 450 mm in width or one-third the height of adjacent openings.

The bond strength of no-fines concrete is low but for open ings up to about 1.5 m wide the walling itself may be reinforced to act as a lintel provided there is a depth of wall not less than 230 to 300 mm above the opening. As a precaution against corrosion the steel should be galvanized or coated with cement wash and bedded in cement mortar. For wider openings an in situ or precast reinforced lintel of dense concrete is generally necessary. Even when the wall above openings is not required to act as a lintel to carry floor or roof loads, horizontal reinforcement equivalent to a 13 mm steel bar should be placed above and below all openings. In buildings with timber floors the steel above the openings in external walls is usually made continuous.

Because of its weakness in tension, walls of no-fines concrete are sensitive to differential settlement. Particular attention must, therefore, be paid to the design of the foundations. For small buildings the lower part of the walls and the strip foundation should be of dense concrete, reinforced if necessary. For high buildings adequate stiffness is usually obtained by the use of rigid reinforced dense concrete cellular foundations.

BASIC STESSES FOR PLAIN CONCRETE WALLS

Cement	Aggregate	Nominal mix	Volume of aggregate per 50 kg of cement		Cube strength* within 28 days after mixing		Maximum permissible stresses
			Fine	coarse	Preliminary test	Works test	
			m^3	m^3	MN/m^2	MN/m^2	MN/m^2
Portland cement, Portland blast-furnace cement and other cements included in CP 110	Concrete with: (i) Natural aggregates to BS882 (ii) Air-cooled blast-furnace slag (coarse aggregate) to BS1047	1:1:2 1:1½:3 1:2:4 1:3:6 1:4:8	0.03 0.05 0.07 0.10 0.14	0.07 0.10 0.14 0.20 0.28	40 34 28 15 12	30 25.5 21 11.5 8.6	7.6 6.5 5.3 2.4 1.7
Portland cement, Portland blast-furnace cement and other cements included in CP 110	Concrete with: (i) Foamed blast-furnace slag to BS 877 (ii) Clinker aggregate to BS 1165 (iii) Such other artificial aggregates as may be suitable having regard to strength durability and freedom from harmful material	Proportions to be selected to give the required cube strength				14.0 11.0 8.3 5.5 2.8	2.6 2.1 1.6 1.1 0.5
	No-fines concrete with: (i) Natural aggregates to BS 882	Special mixes		0.28		7.0†‡ 3.5	1.3 0.6
	(ii) Air-cooled blast-furnace slag to BS 1047	1:8		0.28		2.8	0.5

NOTES on the table :

Intermediate values for other mixes may be found by interpolation.

* these requirements may be deemed to be satisfied if two-thirds of the value is obtained at 7 days.

† The average cube strength for mix design purposes should be 2.10 MN/m^2 in excess of the cube strength specified

‡ The attainment of this strength increases the density of the concrete to an extent where the thermal insulation properties may be impaired.

THICKNESS

6.7.3.4

Thickness of plain concrete walls

The procedure in calculating is the same as for masonry walls but using different permissible stresses based on varying types and grades of concrete (table A)[1] and a different set of reduction factors (table B) to apply to these stresses for slenderness ratios over fifteen, up to a maximum of twenty-four. An increase in the permissible stresses in a plain concrete wall may be made when the ratio of its storey height to length is less than 1 1/2. This varies linearly from zero at a ratio of 1 1/2 to 20% at a ratio of 1/2 or less. The length of the wall in this case is either the overall length or the length between adjacent openings.

The same increases may be made in the permissible stress in respect of eccentric and concentrated loads and lateral forces as for masonry walls.

It should be noted that notwithstanding the thickness established by calculation the London By-laws require the thickness of an external or party wall of concrete to be not less than 150 mm.

Slenderness ratio	15	18	21	24
Reduction factor	1.00	0.90	0.80	0.70

Linear interpolation between values for the reduction factors is permissible

Plain-concrete walls: reduction factor for slenderness ratios

SHRINKAGE

6.7.3.5.

Shrinkage reinforcement may be required in in situ cast concrete walls, other than those of clinker aggregate or no-fines concrete, particularly in external walls, in order to distribute the cracking due to setting shrinkage and thermal movement, and thus minimise the width of the cracks. Where this reinforcement is considered to be necessary, the Code recommends that it sh should be not less in volume than 0.4 per cent of the volume of the concrete in an external wall. It also makes recommendations in respect of internal walls, the positioning and distribution of the reinforcement and the provision of extra reinforcement round openings where shrinkage effects are greatest

As the drying shrinkage of no-fines concrete is low, reinforcement for this purpose is not usually necessary except, perhaps, with some lightweight aggregates, because the stresses set up by the slight shrinkage are relieved by the formation of fine cracks round the individual particles of aggregate. Shrinkage reinforcement may also be omitted from dense concrete walls where the mix is lean and of low shrinkage and where end restraints on the walls are small and work can be carried out continuously.[2]

R.C. WALLS

6.7.4 REINFORCED CONCRETE WALLS

IN-SITU CAST

6.7.4.1 In-Situ Cast external walls

The reinforced concrete load-bearing wall used as the enclosing wall to a building is the alternative to its use as a dividing element in the concrete box frame described below. The wall areas over openings act as beams and those areas between openings as columns. These openings may be wide, since with normal sill heights there is ample depth of wall between window head and cill above to act as a deep, thin beam and the wide, narrow window is a characteristic of this form of construction. Alternatively the whole height of the wall may be regarded as a beam pierced by any necessary openings for windows.

Sufficient width of wall must, of course, be left between openings to act as columns taking all the vertical loads. The problems of appearance and thermal insulation are the same as with the plain concrete wall, but the danger of cracking due to possible unequal settlement is reduced because reinforcement is present to resist any tensile stresses set up.

BOX FRAMES

6.7.4.2 Concrete Box Frames

This is a form of cross-wall construction in which the walls are of normal dense concrete and, with the floors form box-like cells as shown in the fig. As in the case of brick or block cross-wall construction,

BOX FRAMES

it is suited to those building types in which separating walls occur at regular intervals and are required to have a high degree of fire resistance and sound insulation. The most common building type in this category for which it is suitable is the multi-storey flat or maisonette block.

In concrete walls of normal domestic scale, about 2.75m high and 100 mm thick, failure is almost wholly related to the strength of the concrete and very little to the slenderness of the wall. Reinforcement, therefore, may be nominal in amount or may be omitted altogether provided that the concrete is sufficiently strong to resist the stresses set up under load. For multi-storey blocks in the region of ten or eleven storeys high the mix would be designed to give a strength of around 15.5 N/mm^2 at 28 days, although for the two lowest storeys a stronger mix might be necessary as well as the inclusion of reinforcement.

Cracking due to the shrinkage is normally overcome by the inclusion of shrinkage reinforcement. Such cracking generally occurs only if the shrinkage is resisted by some restraint, such as that offered by changes in the plane of a wall or by a previously poured lift of concrete which has been permitted to take up its shrinkage before the next lift is poured on to it. Provided that concreting can proceed without undue delay and that the walls are in simple, straight lengths, shrinkage reinforcement in the walls may safely be omitted.

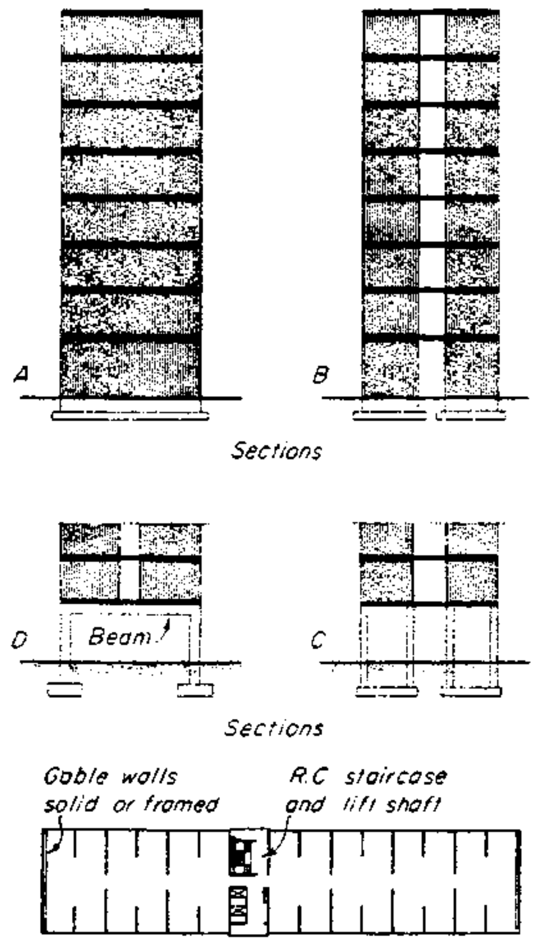

Typical plan

Although the junctions of walls and floors in a box frame are monolithic, if the walls are not reinforced the structure can only provide rigidity in the length of the building to the extent of the precompression set up in the walls by the floor loads and self-weight of the walls, as explained in the case of normal cross-wall construction (see page 132). Additional stability must normally be given by staircase and lift shafts of reinforced concrete, or by the inclusion of longitudinal walls at certain points in the plan. The box-walls themselves provide rigidity in the transverse direction.

In its simplest and most economic form all the box walls run in a straight, unbroken line from back to front of the building and are supported directly by a strip foundation (fig.A). They may, however, be pierced by openings or be in completely separate sections on the same line, or staggered relative to each other provided that each section is in the same position throughout the height of the building (b). If the upper floors are to be supported on columns at ground level the necessity of beams and the disposition of the columns will depend upon the arrangement of the walls above. Straight, unbroken box walls can act as deep beams spanning between the supporting columns with any necessary reinforcement placed in the tension and shear zones. If the walls are broken extra columns must be introduced to enable each wall section to act as a beam (C) or, alternatively, a separate beam must be introduced to pick up the sections and transfer the loads to the columns (D).

BOX FRAMES

P.C. PANELS

6.7.4.3. Large precast panel structure

In this form of construction the loadbearing elements are large panels not less than storey-height, used with precast floor and roof units (figure 6.7.4.2 D) Window openings may be cast in the external panels which are usually finished with an exposed aggregate or tooled or profiled surface and incorporate thermal insulation, either sandwiched between two leafs or applied to the internal face. Internal panels can be made smooth enough to make plastering unnecessay

Solid external panels are insulated internally. They are simpler to produce than sandwich panels but usually require a vapour barrier near the inner face. Certain types of these panels are in cavity or cored form.

Internal loadbearing wall panels are solid or cored and between 125 and 225 mm thick with nominal reinforcement. Adequate sound insulation can be achieved with a thickness of 175 mm if plastered on both sides and rather thicker if not.

Floor panels may be of solid or cored construction. The former may be reinforced as two-way spanning slabs and they also provide better air-borne sound insulation. The latter are lighter in weight, but can span in one direction only.

P.C. PANELS

CASTING

- Casting panels

Horizontal casting is used for complicated panels which present some difficulty in casting, such as sandwich-panels for external walls, those with openings in them and those which are to have an integral or applied surface finish. When cast these are preferably removed from the moulds by means of pivoting mould beds or by vacuum pads, in order to avoid damage. The former method avoids the need for reinforcement to resist lifting stresses.

Vertical casting is preferable for wall and floor panels required to have a fair face both sides since this has the advantage of eliminating face trowelling. The moulds can be arranged in batteries with ten or more compartments, the division plates being of thick steel or concrete panels or of ply facing on both sides of a steel frame. The system of using two concrete panels, initially cast horizontally with a very smooth, true face, as the mould faces to reproduce a run of similar units was developed by the Building Research Station. The first panel is cast between the initial pair and has a true face on each side. After curing the three panels are spaced apart to provide the mould for two further panels, the five then being used to produce four more, and so on.

The method is most suitable for residential buildings since the dense concrete panels can provide, as well as the strength for load bearing, the degree of fire resistance and sound insulation required at the separating walls. Cellular, cross-wall and spine-wall plan forms may be used. The advantage of the cellular plan is its inherent stability and the fact that all walls may be loadbearing so that the floor panels may be two-way spanning.

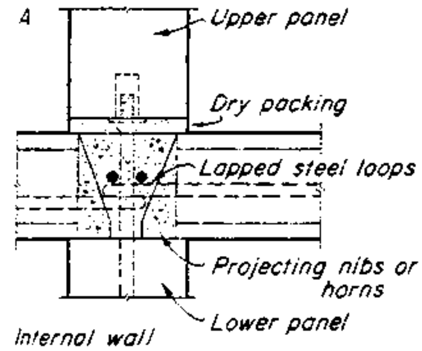

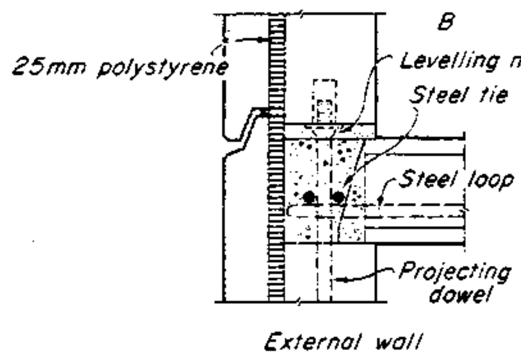

- Types of panels

External wall panels are commonly either of solid or of sandwich construction although waffle slabs are also used. The latter, however, have a number of disadvantages.

Sandwich panels have a layer of insulation incorporated either symmetrically or asymmetrically in the thickness of the slab (fig.6.7.4.2.). In the former both internal and external leaves are loadbearing with transverse ties strong enough to ensure that both act together. The restraint thus offered to thermal and moisture movement in the external leaf can cause it to warp. This is overcome by an asymmetrical positioning of the insulation since the thinner non-loadbearing leaf, usually external, required only to be attached to the loadbearing leaf by lighter forms of ties. These ties, either of hot-dipped galvanized mild steel, or of suitable non-ferrous metal, must have ends formed to ensure a mechanical anchorage between the leaves.

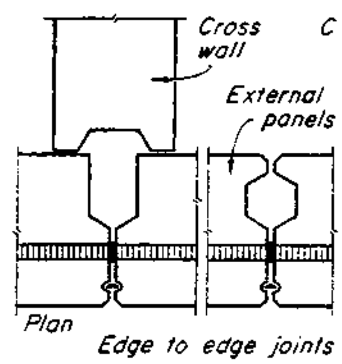

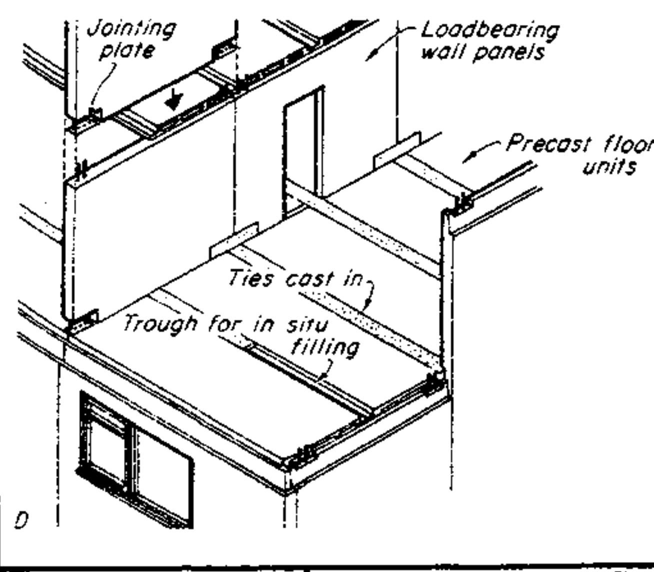

STRUCTURAL CONNECTIONS

- <u>Structural connections</u>

In situ concrete is commonly used to form the structural joints between panels. The method used to form the horizontal joint between the wall panels is shown in the fig. A, B.

It is preferable to limit the bearing of the floor slabs on the heads of the wall panels by the provision of projecting nibs or horns at about 150 to 225 mm centres along the edge of the floor panels, which provide the necessary support for the floor slabs. This permits the load from the upper wall panel to be transferred across the whole width of the wall directly to the panel below as shown. A threaded bar or dowel projecting from each end of the lower panel provides, by means of nut and washer, temporary support and a means of levelling the top panel. The joint is filled with in situ concrete and after this has set the gap above it is dry packed with cement mortar. When this in turn has set the nuts are run down to ensure contact between the upper slab and the packing thus off-setting the initial shrinkage of the mortar.

With cross and spine wall plans overall ridigity can be provided by in situ cast lift and stairwells, but this has the disadvantage of mixing precast and in situ work on the site. Fully precast construction uses bathrooms precast as reinforced concrete boxes complete with floor and ceiling and lift and stairwells precast in storey or half-storey heights which, when erected on each other, form structural 'columns' running the full height of the building. A number of these vertical units along the centre of the block form a structural spine to the remainder of the structure which is fabricated from large precast floor panels and storey height loadbearing wall panels (E).

OPENINGS IN WALLS

6.8. Openings in Walls

- An opening in an external wall of a
  - o head
  - o jamb (or reveal) and
  - o sill (or threshold)

6.8.1 HEAD: its function is to carry the triangular load of brickwork over the opening and transmit this load to the jambs at the sides. To fulfil this task it must have the capacity to support the load without unacceptable deflection.
A variety of materials and methods is available in the form of a LINTEL or BEAM such as:

- o timber: suitable for light loads and small spans, the timber should be treated with a preservative to prevent attack by beetles or fungus.

- o steel: for small openings a mild steel flat or angle section can be used to carry the outside leaf of a cavity wall, the inner leaf being supported by a concrete or steel Lintel,
  for medium spans - a chanel or joist section is usually suitable,
  for larger spans - a universal beam section to design calculations will be needed.

  Steel lintels which are exposed to the elements should be either galvanised or painted with several coats of bitumious paint to give them protection against corrosion.

- o Concrete: these can be designed as insitu or precast reinforced beams or lintels and can be used for all spans. Prestressed concrete lintels are available for the small and medium spans.

- o Stone: these can be natural, artificial or reconstructed stone but are generally used as a facing to a steel or concrete lintel.

- o Brick: unless reinforced with mild steel bars or mesh, brick lintels are only suitable for small spans up to 1 m, but like stone, bricks are also employed as a facing to a steel or concrete lintel.

LINTELS

6.8.11 LINTELS: Require a bearing at each end of the opening, the amount will vary with the span but generally it will be:
100mm for the small spans and up to
225mm for the medium and large spans.

- In cavity walling a D.P.C. will be required where the cavity is bridged by the lintel and this should extend at least 150mm beyond each end of the lintel.
- Open joints are sometimes used to act as weep holes; these are placed at 900mm centres in the in the outer leaf immediately above the D.P.C.

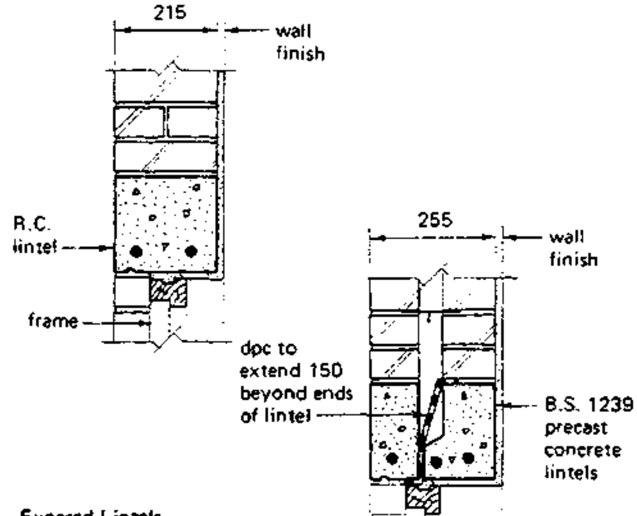

Exposed Lintels

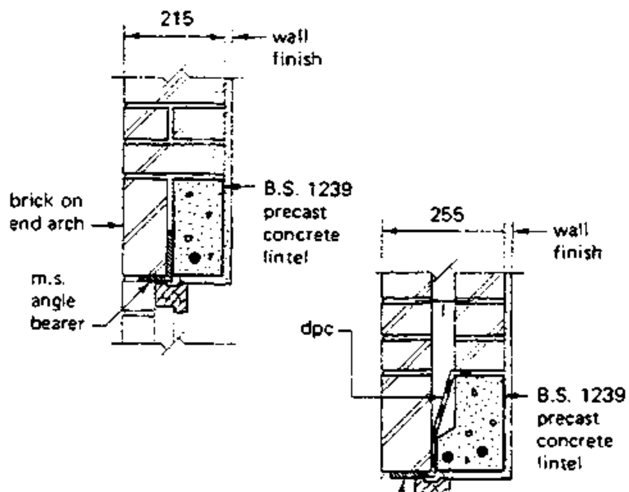

Concealed Lintels

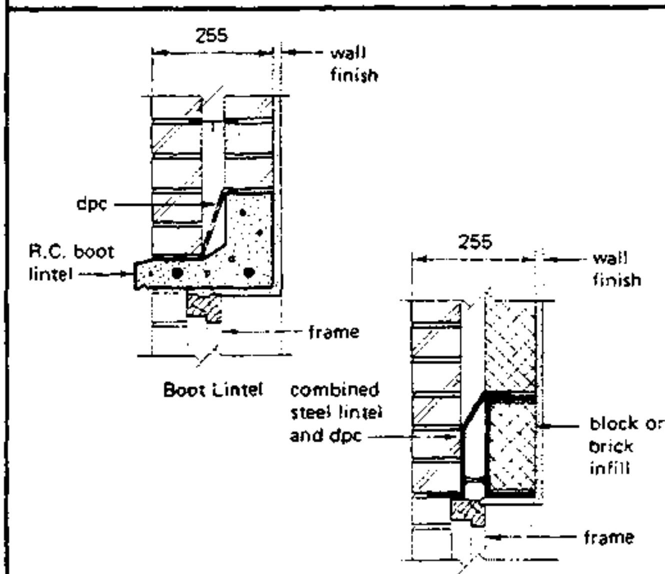

Boot Lintel

Pressed Steel Lintel

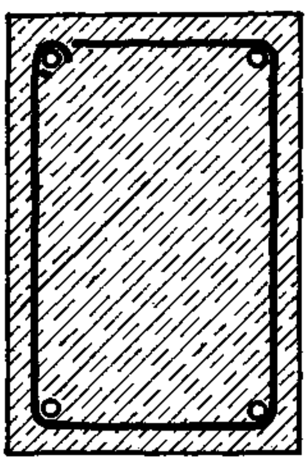

r.c. lintel

6.WALLS	OPENINGS IN WALLS	BUILDING CONSTR.
compiled: D.VOLKE		LECTURE
JULY '80		CET 3031 / 16.8.83

TECHNICAL COLLEGE ARUSHA
CHUO CHA UFUNDI ARUSHA

CIVIL ENGINEER DEPARTMENT

FORMWORK & STEELREINFORCEMENT BARS
for a simple R.C.LINTEL (span : 2.70 m)

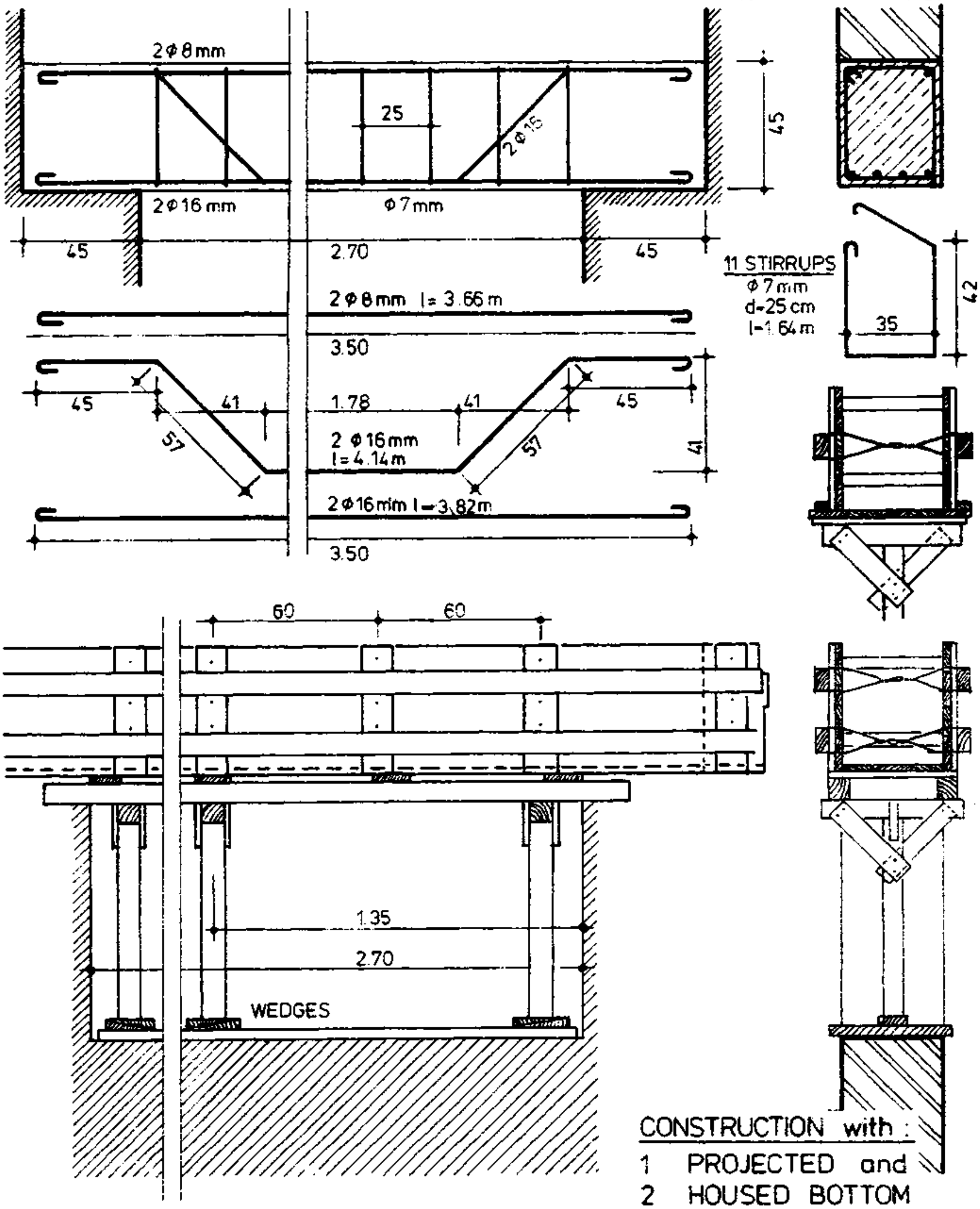

6. WALLS compiled: D.VOLKE JULY '80	OPENINGS IN WALLS	BUILDING CONSTR. — LECTURE — CET 3031/16.8.84
TCA TECHNICAL COLLEGE ARUSHA CHUO CHA UFUNDI ARUSHA	CIVIL ENGINEER DEPARTMENT	84

ARCHES

6.8.12 ARCHES: These are arrangements of wedged shaped bricks designed to support each other and carry the load over the opening round a curved profile, to abutments on either side.

An exception to this form is the flat or "soldier" arch constructed of bricks laid on end or on edge.

When constructing an arch it must be given temporary support until the brick joints have set and the arch has gained sufficient strength to support itself and carry the load over the opening. These temporary supports are called CENTRES and are usually made of timber; their design is governed by the span, load and thickness at the arch to be constructed.

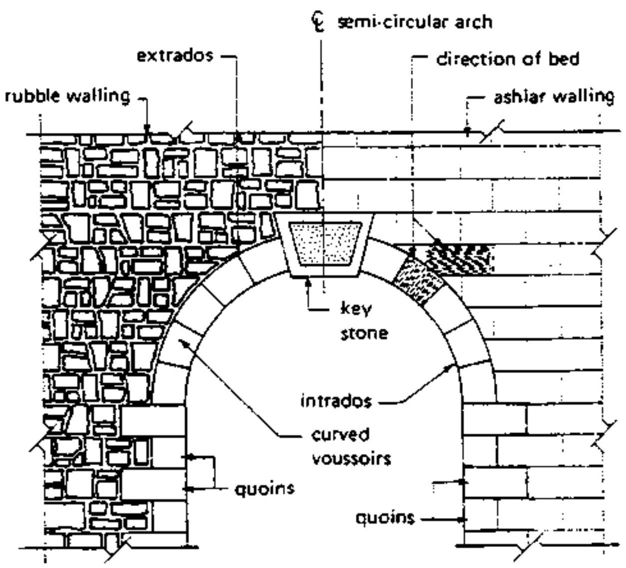

- ARCH Terminology:

- Voussoirs: The wedge-shaped bricks or blocks of stone which comprise an arch; the last voussoire to be placed in position is usually the central one and known as the KEY Brick or KEY Stone.
- Ring, Rim or Ring Course: The circular course or courses comprising the arch.
- Extrados or Back: The external curve of the arch.
- Intrados: The inner curve of the arch.
- Soffit: The inner or under surface of the arch.
- Abutments: the portions of the wall which supports the arch.
- Skewbacks: The inclined or splayed surface of the abutments prepared to receive the arch and from which the arch springs.

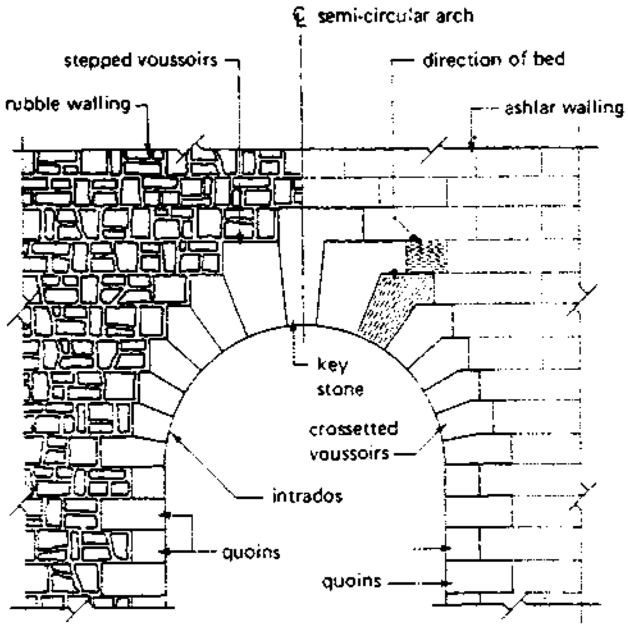

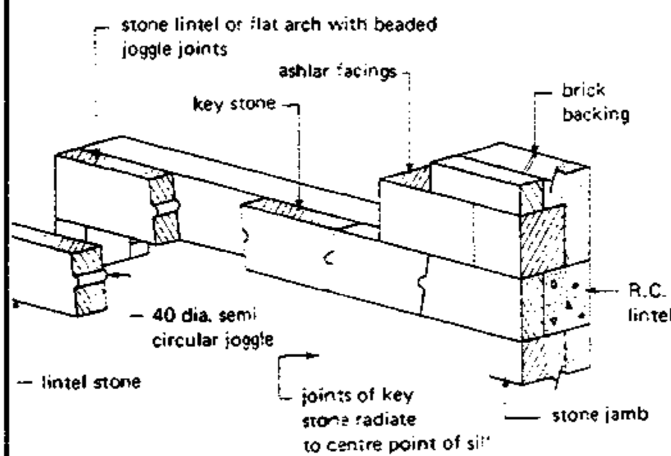

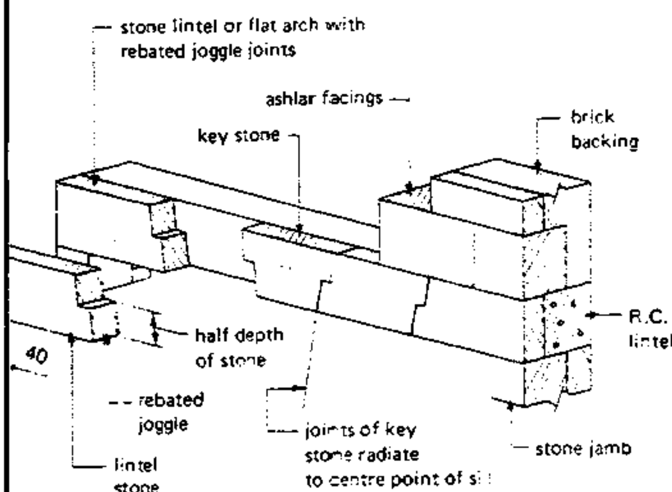

- Springing Points: The points at the intersection between the skewbacks and the intrados.
- Springing Line: The horizontal line joining the two springing points.
- Springes: The lowest voussoirs immediately adjacent to the skewbacks.
- Crown: The highest point of the extrados.
- Haunch: The lower half of the arch between the crown and a skewback.
- Span: The horizontal distance between the reveals of the supports.
- Rise: The vertical distance between the springing line and the highest point of the intrados.
- Centre (or striking point) and Radius: (See Fig.)
- Depth or Height: The distance between the extrados and intrados.
- Thickness: The horizontal distance between and at right angles to the front and back faces; it is sometimes referred to as the width or breadth at the soffit.
- Bed joints: The joints between the voussoirs which radiate from the centre.
- Spandril: The triangular walling enclosed by the extrados, a vertical line from the top of the skewback, and a horizontal line from the crown.
- Impost: The projecting course (or courses) at the upper part of a pier or other abutments to stress the springing line.

- CLASSIFICATION OF ARCHES:

Arches are classified according to their
(a) shape and (b) materials and workmanship employed in their construction.

CLASSIFICATION

a

(a) The more familiar forms are:

flat (straight or camber) Archs.
- o gauged flat arch
- o purpose-made flat arch
- o axed brick flat arch.

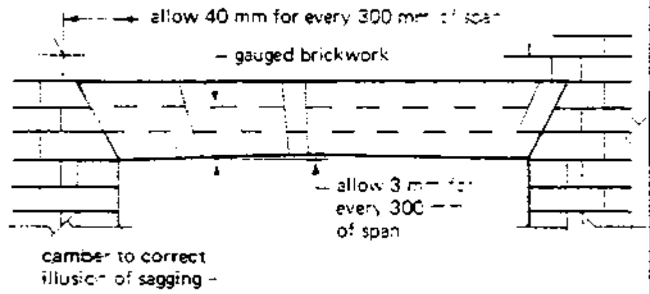

Camber Arch

- Segemental Archs:
  - o gauged segmental Arch
  - o purpose-made brick segmental Arch
  - o axed brick segmental Arch
  - o rough brick segmental Arch.

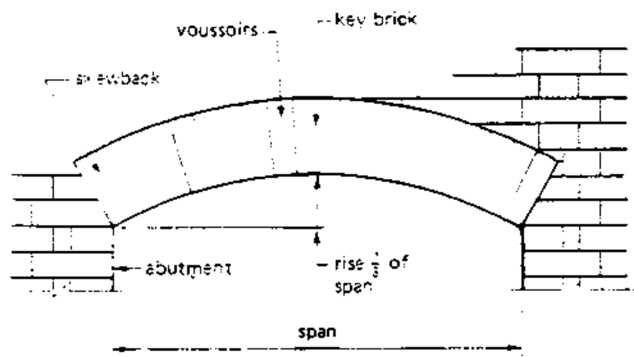

Gauged Segmental Arch

- Semicircular Archs:
  - o gauged semicircular Arch
  - o purpose-made brick semicircular Arch
  - o axed brick semicircular arches
  - o rough brick semicircular arch.

Others which are not so generally adopted are: Circular Archs, Semi elliptical Archs, Elliptical Archs, Pointed Archs.

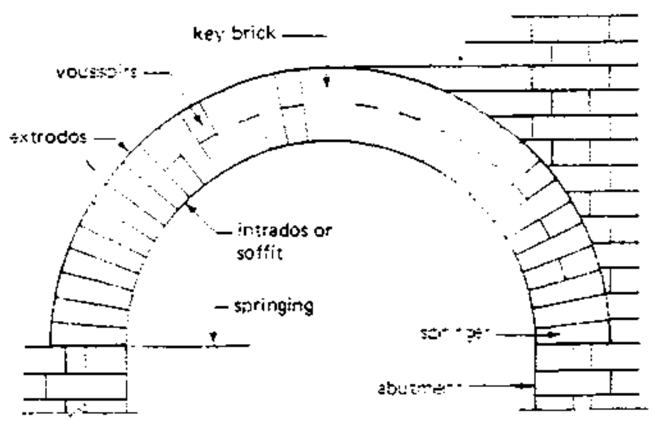

Gauged Semi-circular Arch

b	(b) The voussoirs may consist of: o rubber bricks o purpose-made bricks o ordinary or standard bricks cut to wedge shape (known as axed bricks) o Standard uncut bricks.
RUBBER BRICKS (Rubbers, Cutters or Malms): soft bricks; various sizes; can be readily sawn and rubbed to the desired shape;are used in the construction of " gauged arch ".	GAUGED ARCHES
PURPOSE-MADE BRICKS: specially hand-moulded to the required shape; used for good class work of "Purpose-made brick Archs".	PURPOSE-MADE BRICK ARCHES
ORDINARY BRICKS CUT TO WEDGE SHAPE: are standard bricks, roughly cut to the required wedge shape by using a bolster and dressed off with a scutch, or axe. Used in the construction of "Axed brick Archs".	AXED BRICK ARCHES
ORDINARY STANDARD UNCUT BRICKS: When such bricks are used in the construction of arches, the bed joints are not of uniform thickness, but are wedge shaped. They are used for "Rough brick Archs".	ROUGH BRICK ARCHES

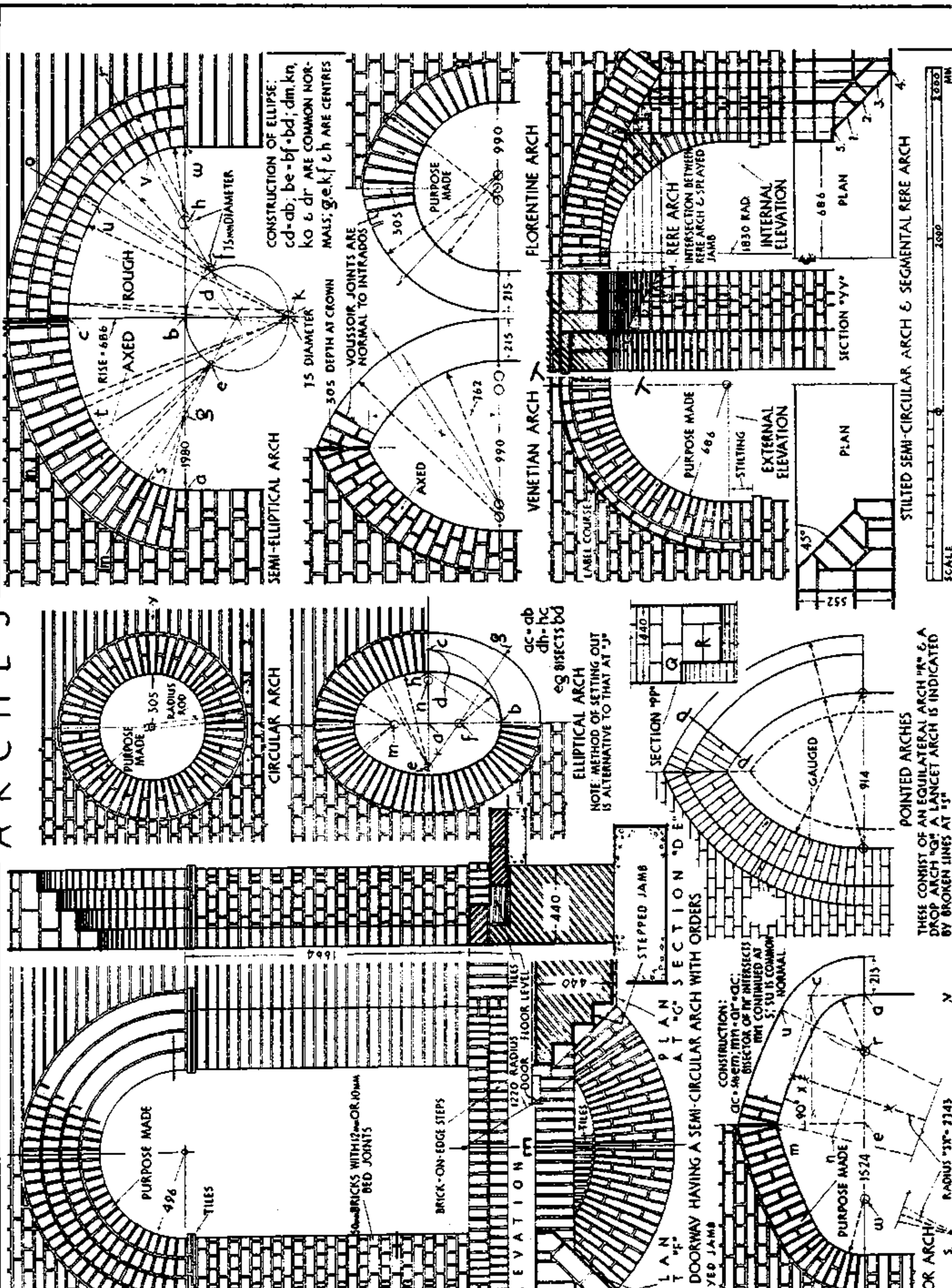

6.WALLS compiled: D.VOLKE JULY '80	OPENINGS IN WALLS	BUILDING CONSTR. — LECTURE — CET 3031/16.8 89
TCA TECHNICAL COLLEGE ARUSHA CHUO CHA UFUNDI ARUSHA	CIVIL ENGINEER DEPARTMENT	89

CENTRES

- CENTRES:
  Are temporary structures (usually of light timber construction) which are strong enough to support archs of bricks or stone while they are being built and until they are sufficiently set to support themselves and the load over the opening.

  A Centre is always less in width than the soffit of an arch to allow for plumbing (that is: alignment and verticality of the face with a level or rule.) The type of Centre to be used will depend upon:

  (1) The weight to be supported
  (2) The span
  (3) The width of the soffit.

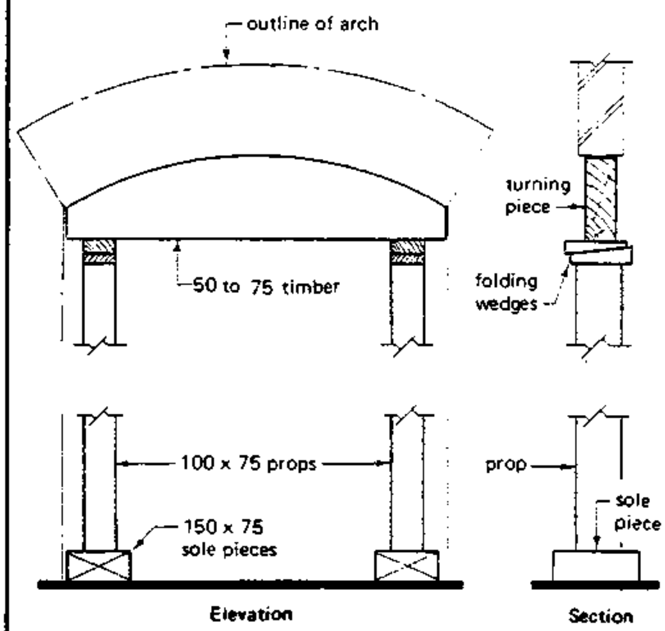

Generally soffits not wider than 150mm will require one rib at least 50 mm wide and are usually called turning pieces.
Soffits from 150-350mm require two ribs which are framed together using horizontal tie members called laggings.
Soffits over 350mm require three or more sets of ribs.
The laggings are used to tie the framed ribs together and to provide a base upon which the arch can be built.
Close laggings are those which are touching each other, forming a complete seating for a gauged arch.
Open laggings, spaced at twice the width of laggings, centre to centre, are used for rough arches.

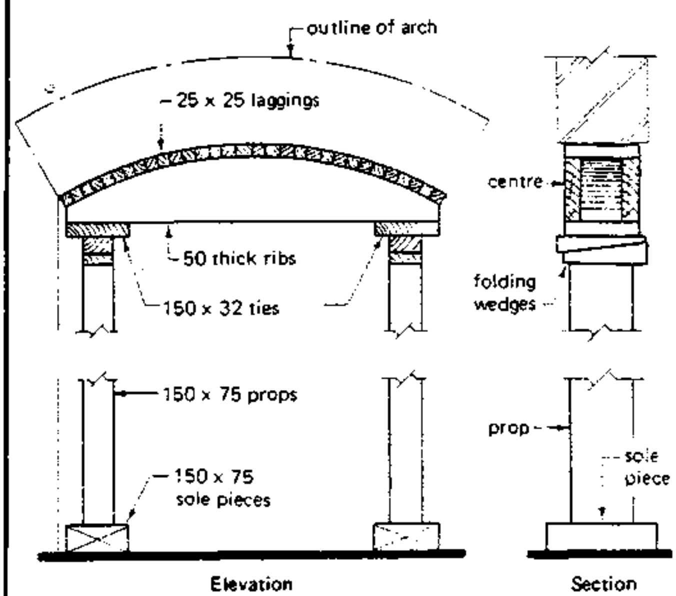

Centres for small span arches

If the arch is composed of different materials, i.e. a stone arch with a relieving arch of brickwork, a separate centre for each material should be used.

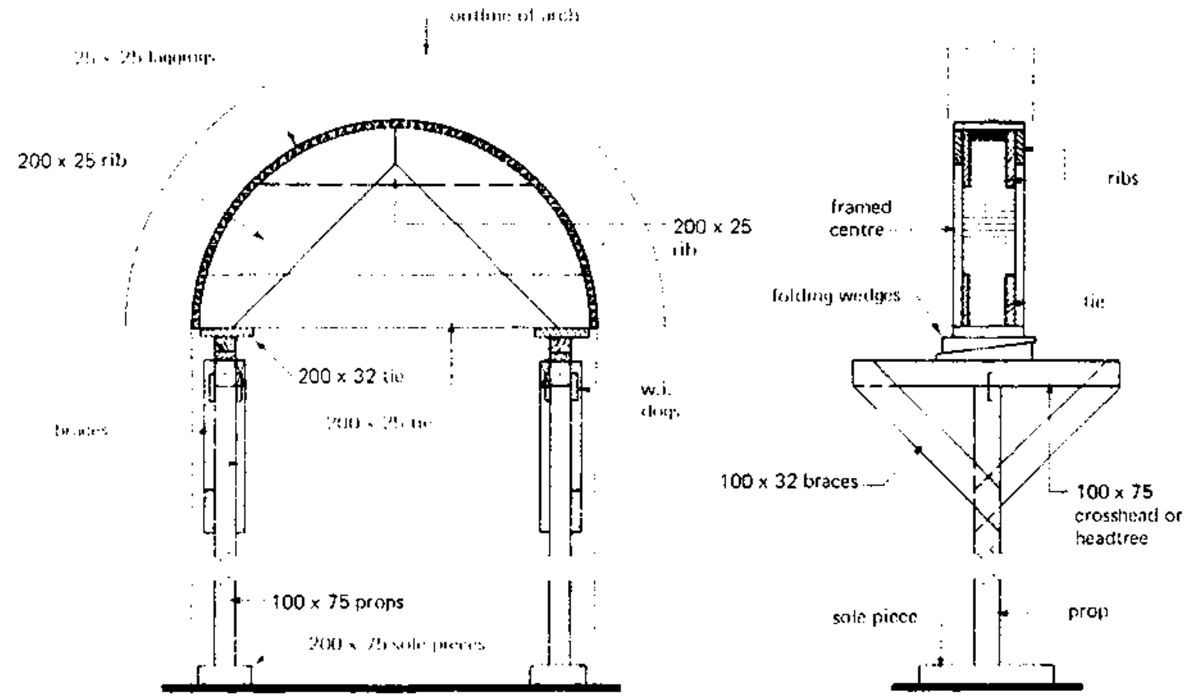

Typical framed centre for spans up to 1500 mm

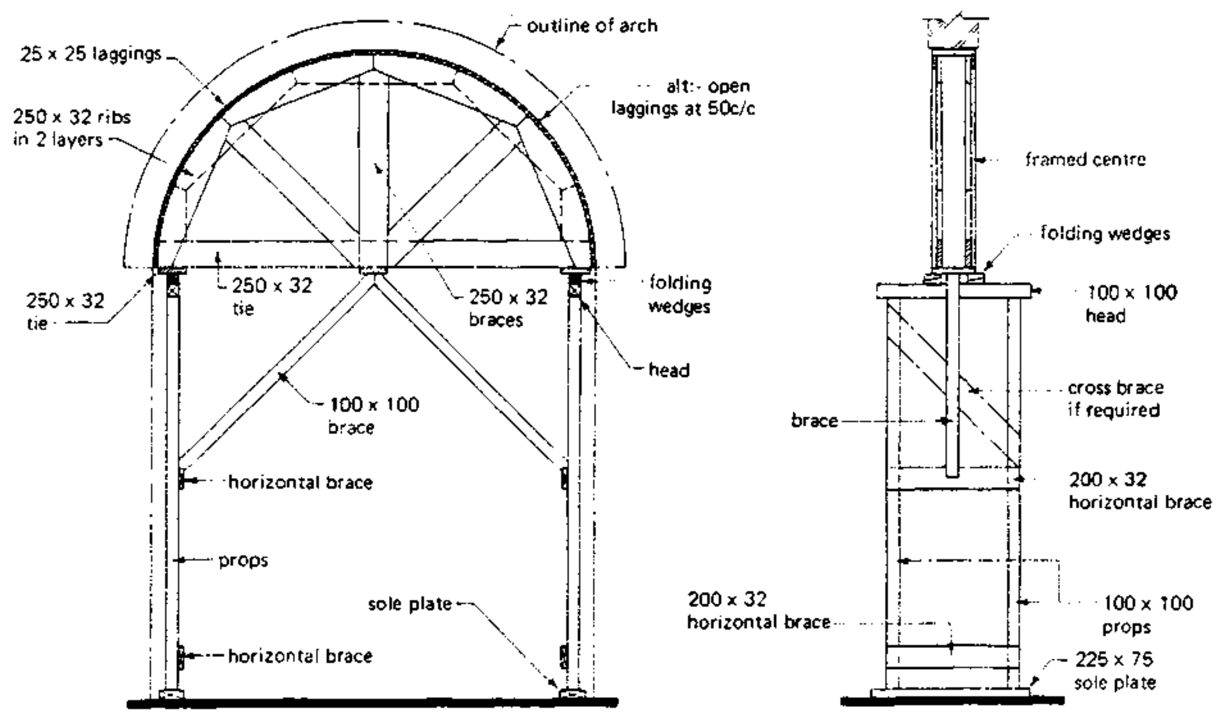

Typical framed centre for spans up to 4 000

6.WALLS	OPENINGS IN WALLS	BUILDING CONSTR.
compiled : D.VOLKE		LECTURE
JULY '80		CET 3031 / 16.8 91

JAMBS

6.8.2 <u>JAMBS</u>: in solid walls these are bonded to give the required profile and strength.

In cavity walls the cavity can be closed at the opening by using a suitable frame or by turning one of the leaves towards the other forming a butt joint in which is incorporated a vertical D.P.C. (as required by the B.R.)

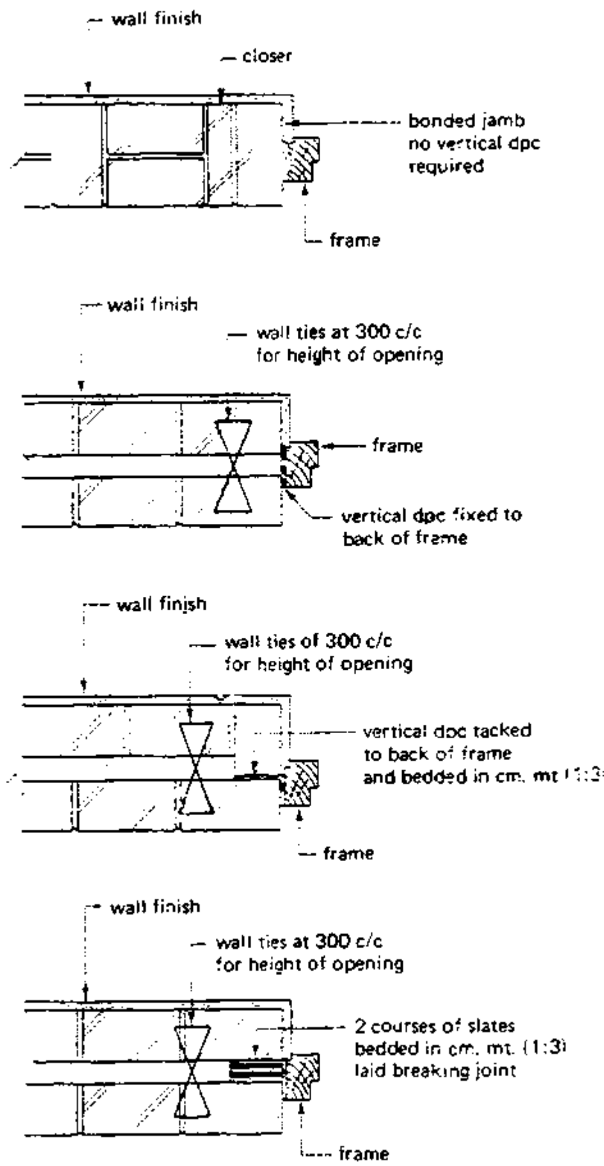

SILLS & THRESHOLDS

6. .3 SILLS and THRESHOLDS

6. .3.1 SILLS: Are defined as the BOTTOM of a Window Opening.

SILLS :

the function of a sill is to shed the rain-water, which has run down the face of the window or door and collected at the base, away from the opening and the face of the wall.

- o Many methods and materials are available.
- o Appearance and durability are the main requirements.
- o Sills (unlike lintels) do not require a bearing at each end.

- Usually a window frame is less thick than the wall in which it is built, so that there are horizontal surfaces of brickwork at the foot of the window.
- Most of the area of a window is glass which does not absorb water, and rain runs off it on to the external surface below.
- The FUNCTION of the SILL, therefore is to protect this part of the wall from the penetration of considerable quantities of water.
- Suitable materials for the construction of sills are:
  - stone
  - concrete
  - brick, slate, stone or quary tiles laid in cement mortar
  - roofing tiles laid to break joint in cement.
  - metal

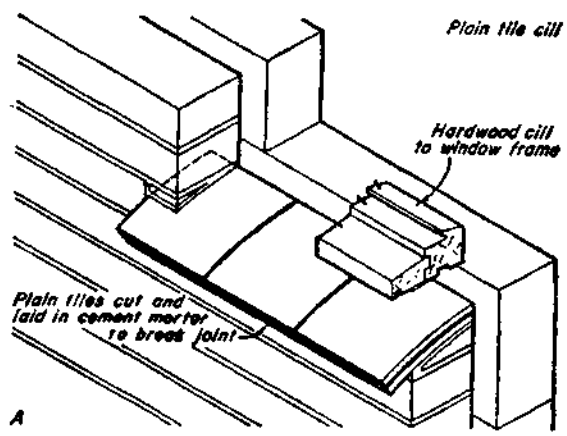

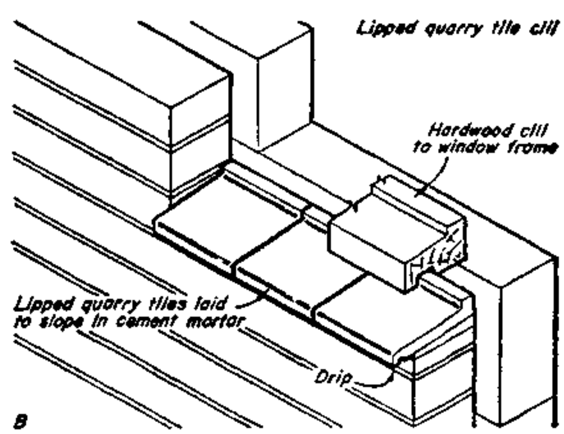

- The top surface of the sill is made to slope downwards and outwards: It is weathered in order to discharge rain water falling on it and the sill itself is made to project not less than 25mm to 40mm beyond the wall face in order to direct the discharge of water away from the face of the wall below.

- To prevent backward flow across the undersite of this projection through wind or capillary attraction a drip is formed at the bottom front edge of the sill projection (a halfround groove 12mm in diameter is satisfactory)

- The joint between sill and window frame is normally sealed with mastic. A feather barrier to water penetration may be incorporated in form of a strip of galvanised steel called a WATER BAR (20mm x 32mm to 32mm x 6.4mm) bedded half its depth in cement mortar in a groove formed in stone, concrete or moulded clay sills the upper projecting half engaging in a similar groove in the under side of the window frame, which is filled with white lead and oil or a mastic before the frame is bedded on the sill.

- As an additional means of protecting the joint, the weathered top surface of the sill, may be sunk slightly at the top. This has the effect of raising the joint above the water-retaining surface and serves to break the force of water blown back to the joint.

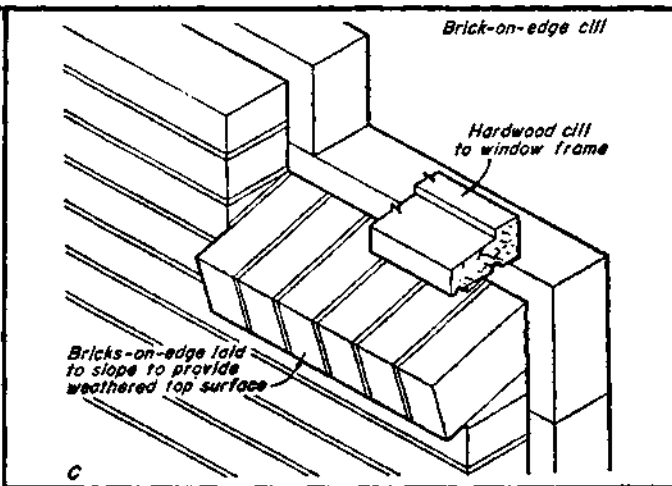

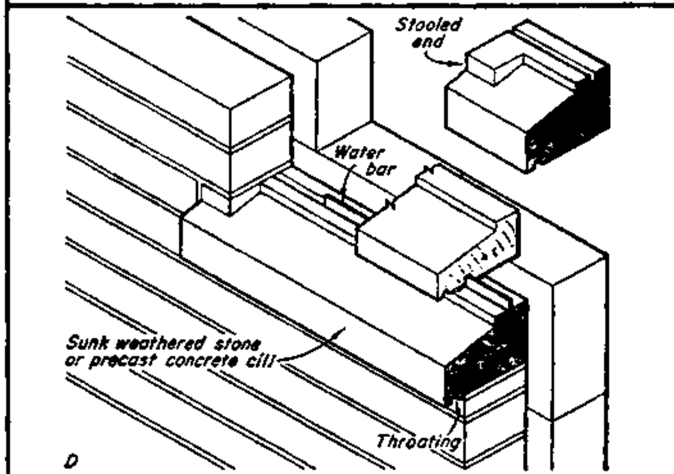

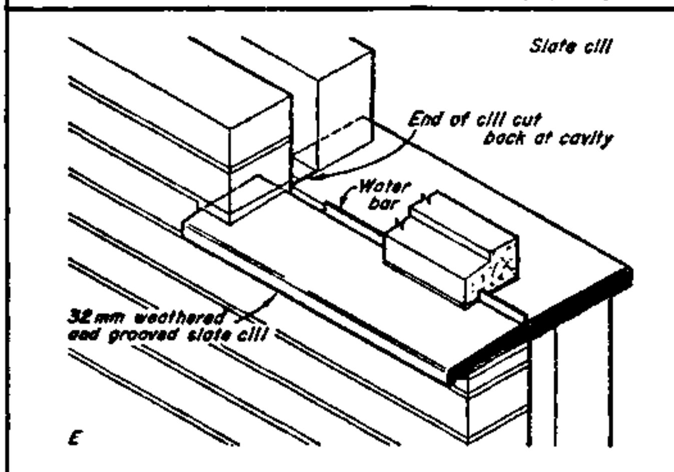

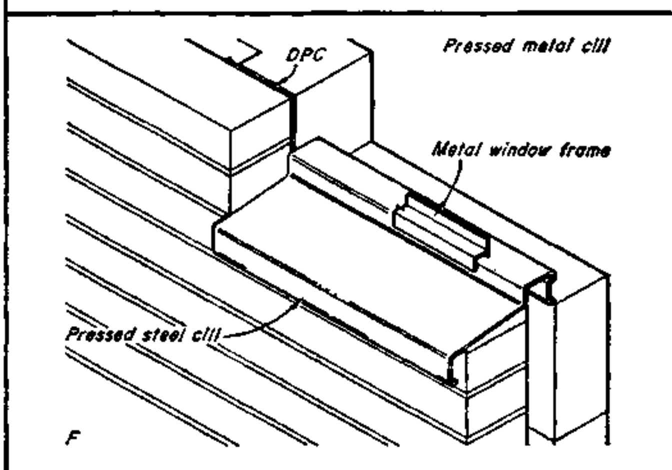

- Lipped quarry tiles may be used to achieve this and to fulfil the function of a water bar at the same time.

- The weathering to a stone or precast concrete sill may be stopped short of the ends to provide a flat seating for the brick jambs. This is called STOOL or STOOLING.

- Natural stone and precast concrete sills are similar in section and are normally not less than 75mm fluck with the depth varying according to the depth of the window reveal.

- Slate (by its nature) can be used in thin sections and slate sills may be safely carried across a vacity to form the internal sill.

- Metal sills may be of
  - cast metal
  - hand-formed out of sheet copper or zinc.
  - pressed out of sheet steel
  - and secured to the wall by MS bracket.

- When the windowframe is set close to the outer face of the wall the main sill (external sill) may be eliminated and its functions be fulfilled by a projecting timer sill to the windowframe.

- There are different ways of finishing the <u>internal</u> sill of windows. The figures show examples of typical internal sill constructions.

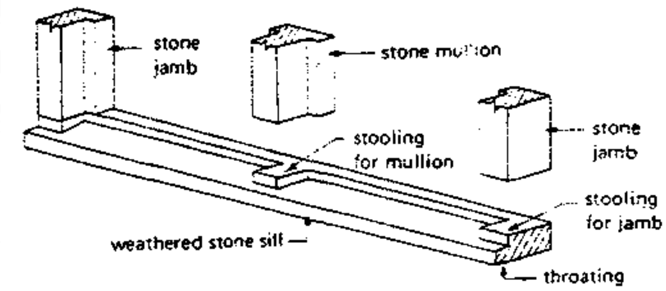

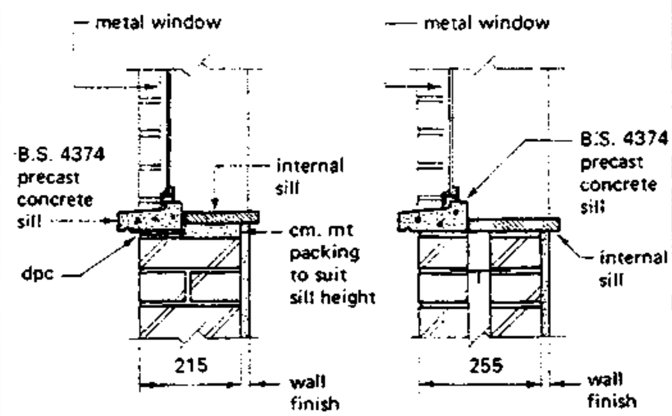

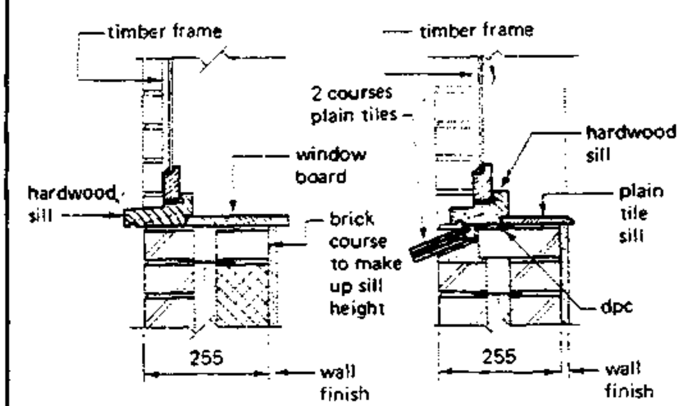

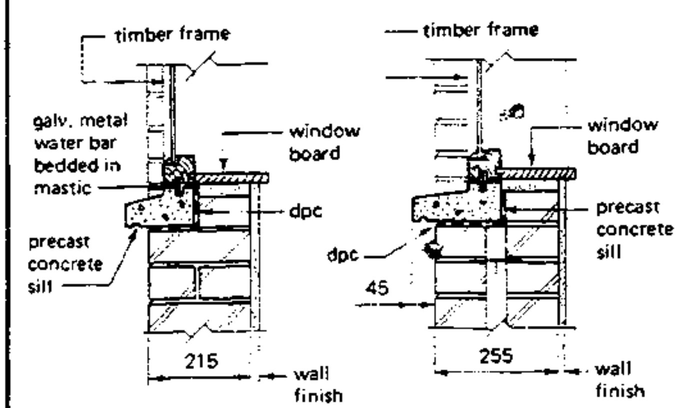

THRESHOLDS

6.8.3.2. THRESHOLDS

Are defined as the Bottom of a <u>Door Opening</u>.

- The width of a threshold should be wide enough to accommodate a human foot and be weathered on the top surface.
- Usually external doors open inwards and the incorporation of a water bar in the threshold and a weather - borad (or weather mould) on the door is advisable in order to prevent the entry of water under the door.
- A hardwood threshold is sometimes incorporated as a part of the door frame, especially where the door is set within a prefabricated wall unit including door, window and infilling panel. This is useful when the distance between ground and floor levels is somewhat greater than a reasonable rise for a single step. (See fig.)
- The provision of a timber threshold results in a drop in level immediately below the weatherboard and if the later is made to project slightly beyond this, water from the door does not fall on to the water retaining surface immediately in front of the water bar.
- People are less likely to trip over a water bar set in a relatively large and visible timber threshold than when it is set in a flush threshold as shown in the fig.

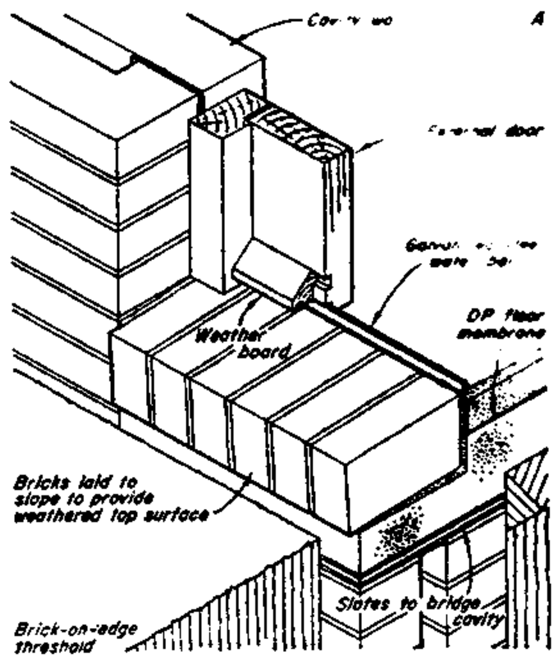

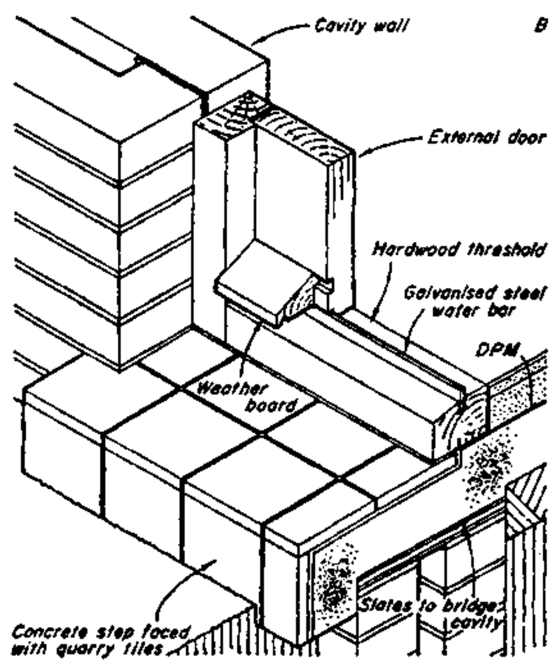

- In case of external doors it is applied to those members with the function of forming a firm and durable base to the doorway and to exclude water.
- Suitable materials are:
  - stone
  - concrete
  - brick
  - quarry tile
  - timber.
- As the floor level is normally above the ground level outside the door an external threshold usually incorporates a step. This may be formed in various ways, either:
  - as an extension of the concrete floor slab or
  - as a separate member of some other material shown in detail in the figure.

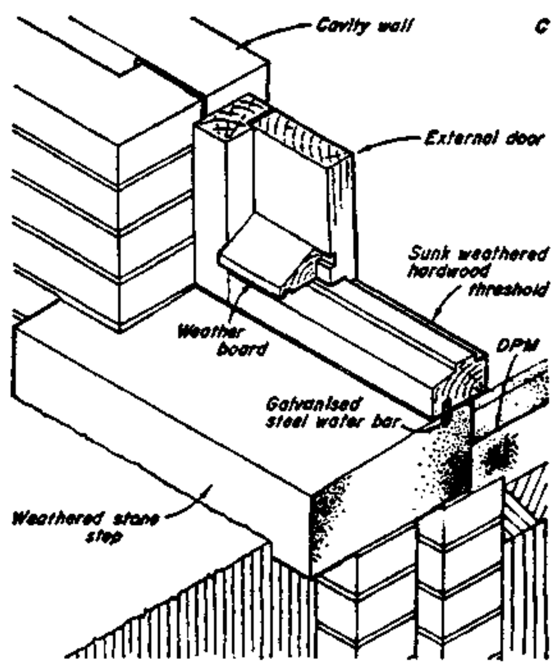

Try to answer the following questions and use sketches where ever necessary and possible

1. Function and properties of walls:

1.1 Name the functions of a wall

1.2 List and give brief explanations (by means of sketches) on the functional requirements of walls

2. Behavior of walls under load:

2.1 Explain the following terms:
a) crushing; b) buckling; c) settling;
d) excentric loading e) slenderness ratio;
f) sliding ; g) frictional resistance
h) passive soil pressure i) overturning by
1. rotation, 2. settlement

2.2 Write notes on 'Calculation of wall thickness' and summarize briefly the design process.

3. Types of walls

3.1 Divide walls into different types

3.2 Explain the differences between:
a) partition walls ; b) party walls
c) seperating walls; d) division walls.

3.3 Describe briefly the characteristics of

a) Retaining walls	b) masonry walls
c) monolithic walls	d) frame walls
e) membrane walls	f) cavity walls
g) cross walls	g) parapets.

4. Stonework

4.1 Classify Building stones and explain briefly their characteristics.

4.2 Write notes on the use and treatment of Building stones.

4.3 What is the difference between 'Reconstructed' and 'Artificial' stones.

4.4 List and describe the main Defects in stone

4.5 Explain the following terms:
a) arris ; b) ashlar ; c) bed joint ; d) bonder
e) cramp; f) dowl ; g) yoggle ; h) lacing
i) natural bat; j) quarry seep ; k) quoin
l) stool m) string course n) weathering

4.6 Give the characteristics of RUBBLE WALLING
4.7 Give the characteristics of ASHLAR WALLING

5. Brickwork
5.1 Define a Brick (according to BS 3921, Part 2)
5.2 Give the size of Standard Bricks
a) British standard ; b) German standard

5.3 Explain by means of sketches:
a) $\frac{1}{2}$ bat b) $\frac{3}{4}$ bat ; c) bevelled bat (large)
d) bevelled bat (small); e) queen closer (half)
f) queen closer (quartes) g) bevelled closer;
h) mitred closer; i) king closer j) double bulluose
k) splay - stretcher e) splay header;

5.4 Describe briefly how bricks are manufactured.

5.5 What is meant with EFFLORESCENCE?

5.6 According to BS 392, Part 2 there are different types of bricks, such as: - solid / - perforated/ - hollow/ - cellular bricks. Explain the differences!

5.7 What are calcium silicate bricks?
What are concrete bricks?

5.8 Write brief notes on Mortars used in brickwork and give typical mixes.

5.9 Explain how to overcome the penetration of dampness in walls, which are affected
a) by rain, penetrating the HEAD of the wall,
b) by rain, beating against external walls;
c) by ground moisture of the base of the wall.

5.10 Sketch common bonds in brickwork such as
a) Header Bond; b) strecher Bond;
c) English Bond; d) cross bond
e) Flamish Bond; and list other kinds of brickwork bonding.

5.11 Explain the Metric Modular Brickwork and compare British standard and the German system.

6. Blockwork
6.1 What is the difference between Brickwork and Blockwork?
6.2 Characterize different types of blocks such as
a) clay blocks; b) precast concrete blocks;
c) aerated concrete blocks.

7. Concrete walls

7.1 How are concrete walls broadly classified?

7.2 What can be used as precaution against cracking in concrete walls?

7.3 Write notes on FORMWORK and sketch three different straight foreward methods used for concrete walls.

7.4 Explain the following terms.

a) Plain monolithic concrete walls;

b) Dense concrete walls;

c) Light - weight aggregate concrete walls
d) Non - fines concrete walls
e) in - situ cast reinf. concrete external walls?
f) concrete box frames
g) large precast panel structures.

8. Openings in walls.

8.1 What are the members of an opening in a wall?

8.2 Explain (by using sketches) the function and the way of construction of R.C. Lintels

8.3 List different forms of archs

8.4 What are JAMBS ?

8.5 Explain the function of a) a sill and b) a threshold.

8.6 List suitable materials for the construction of a) sills and b) thresholds

8.7 Sketch and explain different typical sill details, such as:
a) plain tile sill
b) lipped quarry tile sill
c) Brick - on edge sill
d) sunk weathered stone or precast concrete sill
e) weathered precast concrete sill
f) slate sill
g) pressed steel sill

8.8 Sketch and explain different typical threshold details, such as:
a) Brick - on edge threshold
b) concrete step, faced with quarry tiles
c) weathered stone step

8.9 Explain (if necessary by sketching) the terms:

a) internal sill ; b) stool or stooling, c) water - bar:
d) weather - board; e) hardwood threshold.

7. FLOORS

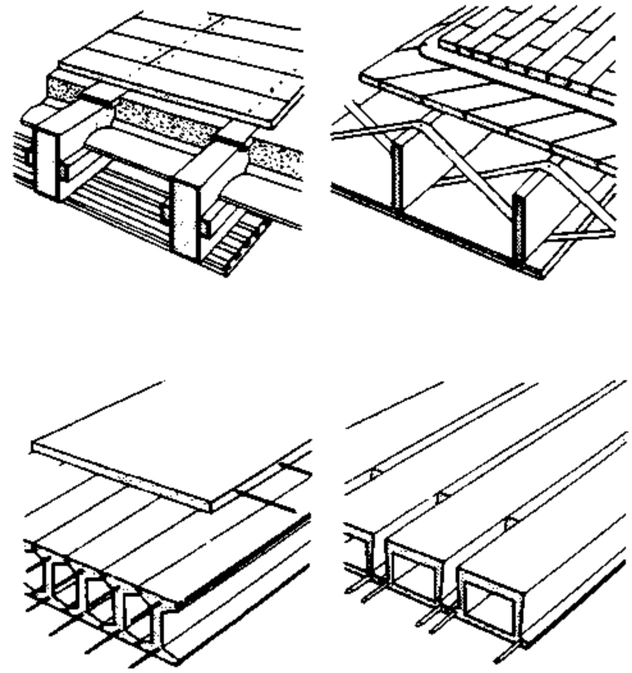

CONTENTS :

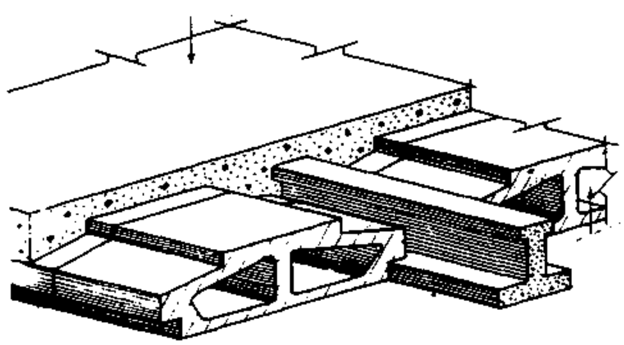

REFERENCES :

1. R.L. Fullerton
"Building Construction in Warm Climates"
Vol. 1

2. R. Barry
"The Construction of Buildings"
Vol. 1

3. Jack Stroud Foster
MITCHELL'S BUILDING CONSTRUCTION
"Structure and Fabric"
Part 1

4. N.S. Whyte and Vincent Powell-Smith
"The Building Regulations"
5th Edition

5. BRE Digest
"Building Construction"

6. E. Neufert
"Architect's Data"

7. FLOORS

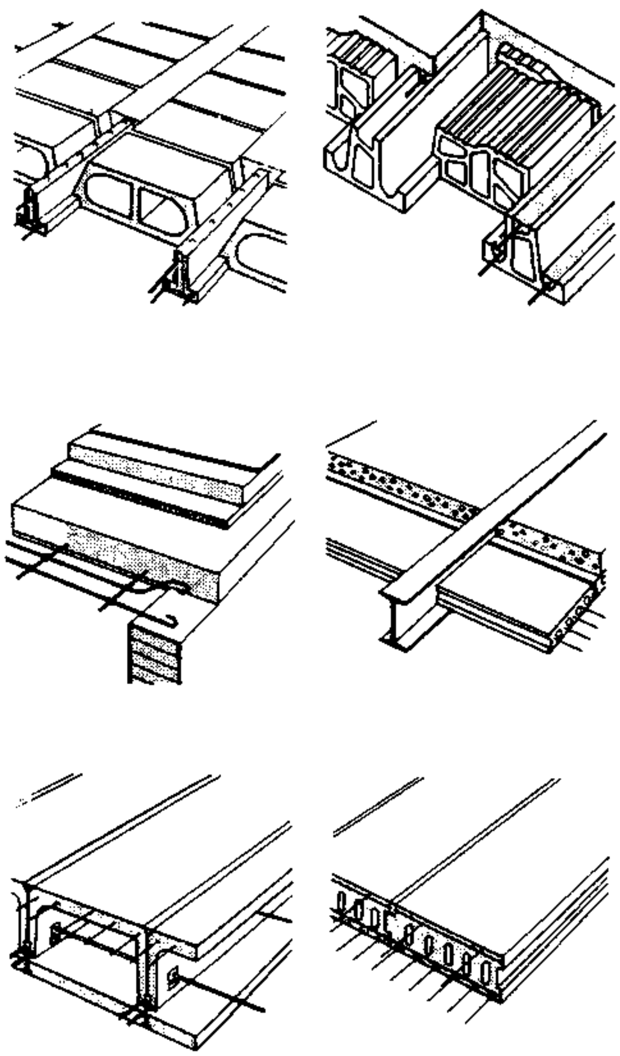

LOCAL BYLAWS

7. FLOORS

7.1 General

- Traditionally the GROUND-FLOOR of most small buildings were formed directly of the ground, the soil being rammed until it was firm and sometimes on it where laid flag-stones or bricks to form a hard surface.

  This was unsatisfactory, because the moisture which was continously withdrawn from the soil below the building made the floor DAMP, unconfortable and unhealthy.Therefore other types of floors have been developed in order to make buildings more comfortable and healthy.

- The <u>CONSTRUCTION</u> of a floor - especially in warm climates - will depend largely on its purpose and the material available. The <u>chief factors</u> affecting its design are
  - strength
  - comfort
  - coolness (or thermal insulation)
  - sound insulation
  - flexibility (especially in earthquake areas)

- LOCAL BYLAWS demand a certain capability of carrying load according to its destination; e.g.:
  - a <u>domestic floor</u> may be required to carry only 14,6 MN/m^2 (146 kg/m^2)
  - an <u>industrial floor</u> may be required to carry 48,8 MN/m^2 (488 kg/m^2)

SOLID GROUND FLOORS

7.2 Solid Ground Floors

- Concrete Ground Floors are most widely used today and are usually solid.
- On poor, or uneven ground, or where heavy loads are to be carried, they may be REINFORCED.
- The floor should be laid on HARDCORE of broken stones, concrete, rock, laterite, lumps or burned bricks - if obtainable.
- Where these items are in short supply, 25 cm of compact FOUNDATION SOIL will serve.
  Not TOP SOIL, because:
  1. to prevent plants, shrubs and trees from attempting to grow under the concrete.
  2. it readily contains moisture and would cause the concrete over it to be damp.

7.21 Site Concrete:

- A continous layer of CONCRETE at least 10cm thick to be spread over the site of all buildings within the external walls on a bed of HARDCORE at least 15cm thick.

  OR

- A continous layer of CONCRETE at least 15 cm thick can be used without HARDCORE underneath.
- The MIXTURE of concrete generally used is

1	:	3	:	6
cement		sand		aggregate

SITE CONCR.

7.21 a

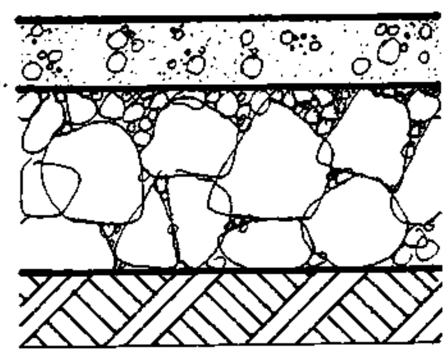

7.21 b

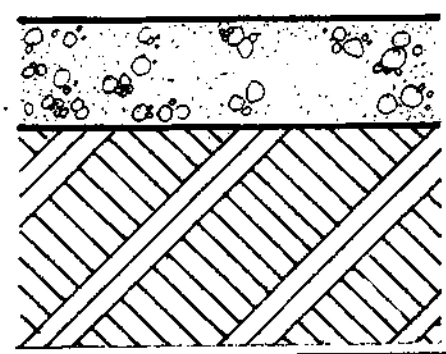

7. FLOORS	SOLID GROUND FLOORS	BUILDING COSTR.
compiled : D.VOLKE	SITE CONCRETE	— LECTURE —
OCT. '80		CET 2031/1 7.2 02

TCA TECHNICAL COLLEGE ARUSHA
CHUO CHA UFUNDI ARUSHA

CIVIL-ENGINEER DEPARTMENT

- The building regulations do not allow this site concrete to be laid directly on the turf or to soil of the site. All vegetable and top soil has to be removed first for reasons, which are already mentioned above.
- The depth of vegetable or top soil varies and on some sites it may be necessary to remove 30 cm or more. If the 15 cm site concrete were then laid, the top surface of the concrete would be 15 cm below the site outside GROUND LEVEL. It will be remembered that DPC in all walls should be 30 cm above the ground, so that there would be 45 cm of the external walls below the DPC and 30 cm above the floor, making the building very liable to damp. One possibility would be to make the site concrete 45 cm thick to bring its top surface up to the correct level, but this would be an unnecessarily expensive method.

Instead - HARDCORE is spread to raise the level of the concrete. (The soil excavated from foundation trenches should not be taken for backfilling or raising the level of the concrete. The excavated soil will have been broken up in digging and would need quite thorough ramming to make certain it did not sink. Further, this soil would tend to retain moisture and make the site concrete damp.

7.21 c

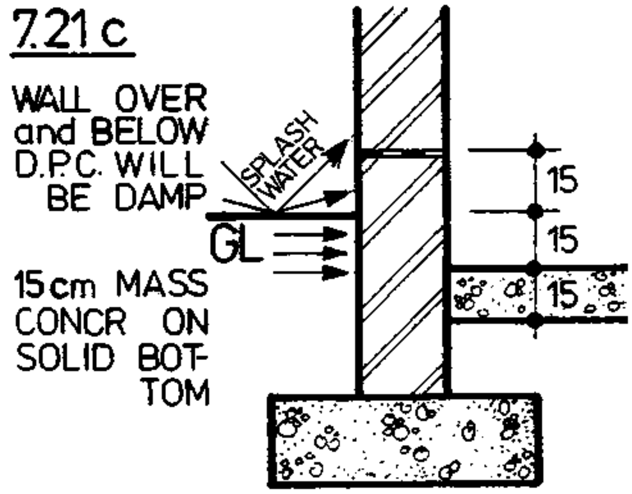

7.21 d

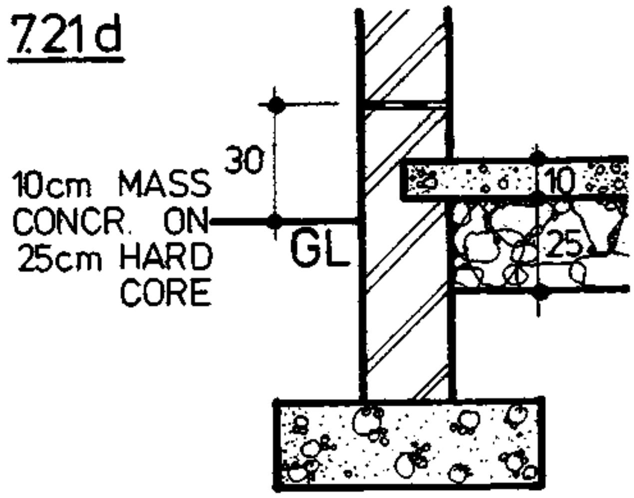

7.21 e

CAVITY WALL

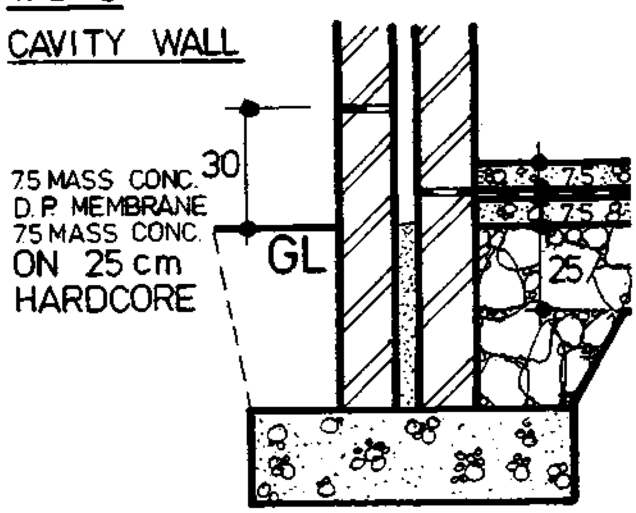

HARDCORE

7.22 Hardcore:

- consists of irregular shaped lumps of
  - . broken bricks
  - . stone or concrete
  - . laterite lumps e.t.c.

  which are hard and do not readily absorb water.

- HARDCORE is spread over the site within the external walls of buildings to such thickness as required to raise the finished surface of the site concrete.
- HARDCORE should be spread until it is roughly level and rammed until it forms a compact bed for the over-site concrete.
- The HARDCORE-BED is usually between 15 cm and 30 cm thick.
- The material used has to be reasonable clean to make it difficult for water to rise by capillary action.
- Before the concrete is laid one has to BLIND the top surface of the concrete - to prevent the wet concrete running down between the hardcore.
  For BLINDING (or sealing) the hardcore a thin layer of very dry coarse concrete can be spread over, or a thin layer of
  coarse clinker or ash
  or aggregate
  can be used.
  The BLINDING LAYER (or coat) will be about 5 cm thick.
  On it the site concrete is spread and finished with a true level top surface.

WATERPROOF MEMBRANE

7.23 Waterproof membrane:

- The waterproof membrane, sandwiched in the concrete prevents damp rising to the floor surface. Fig. 7.21e showes the arrangement.
- The membrane is formed by laying
  1. a 7,5 cm thickness of site concrete and allowing it to thoroughly dry out.
  2. a thin coat of tar or bitumen is poured and spread on the concrete.
  3. a second layer of concrete on to of the hardened tar or bitumen.

SUSPENDED TIMBER GROUND FLooR

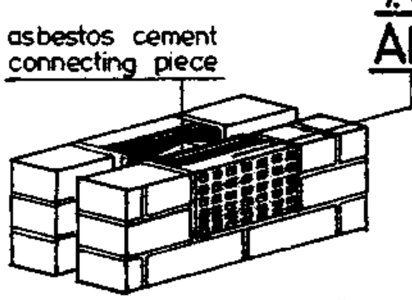

7.3 AIR BRICK
OF GALVAN. CAST IRON OR TERRA COTTA

7.3 Suspended Timber Ground Floor

- Consists of:
  TIMBER BOARDS (or other suitable sheet material) fixed to JOISTS spanning over SLEEPER WALLS.
- A timber floor is used occasionally only because it has properties which a solid groundfloor lacks: Some flexibility and it will easily accept nail fixings.
- It is a more expensive form of construction than a solid ground floor and can only be justified on sloping sites which would need a great deal of filling to make up the ground to the required floor level.
- Suspended timber floors are susceptible to
  DRY ROT and
  DRAUGHTS
  the problem of DRY ROT, which is a fungus that attacks damp timber, can be overcome by adequate ventilation under the floor and the correct positioning of D.P.C. to keep the underfloor area and the timber dry.
  THROUGH VENTILATION is essential to keep the moisture content below 20 % of its oven-dry-weight (which would allow fungalgrowth to take place.
  - The usual method is to allow a free flow of air under the floor covering by providing in the external walls, AIR-BRICKS, sited near the corners and at approximately 2 m centres around the perimeter of the building.
- If a suspended timber floor is used in conjunction with a solid ground floor in an adjoining room, PIPES are used under the solid floor to convey air to and from the external walls.

7.31 Building Regulations

- Fig. 7.31 showes the minimum dimensions required under B.R.C 4 but in practice a greater space between the timber is usual.
- HONEYCOMB sleeper walls are usually built two or three courses high to allow good through ventilation.
- SLEEPER WALLS spaced a 2 m centres will give an economic joist size.
- The width of joists is usually taken as 50 mm (This will give sufficient width for the nails securing the covering.
- The depth can be obtained by reference to Table 1, Schedule 6, B.R. or by design calculations.
  The usual joist depth for domestic work is 125 mm.

BUILDING REGULATIONS

TABLE 1, SCHEDULE 6, B.R.

SEE PAGE CET 2031/1-74 13

SUSPENDED TIMBER FLOOR

acc. to the BUILDING REGULATIONS

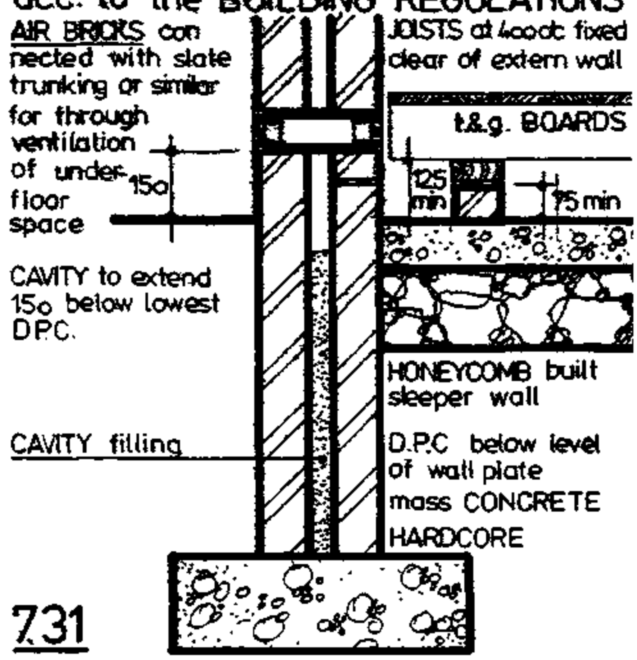

7.31

LAY OUT

7.32 Lay out:

The most economic lay-out is to span the joists across the shortest distance of the room.

- This means the joists could be either parallel or at right - angles to a FIRE - PLACE.
  The fireplace must be constructed of NON-COMBUSTIBLE materials and comply with B.R. L3 and L 4.

- The figures 7.32 a+b show typical exemples.

7.32a JOISTS PARALLEL TO FIREPLACE

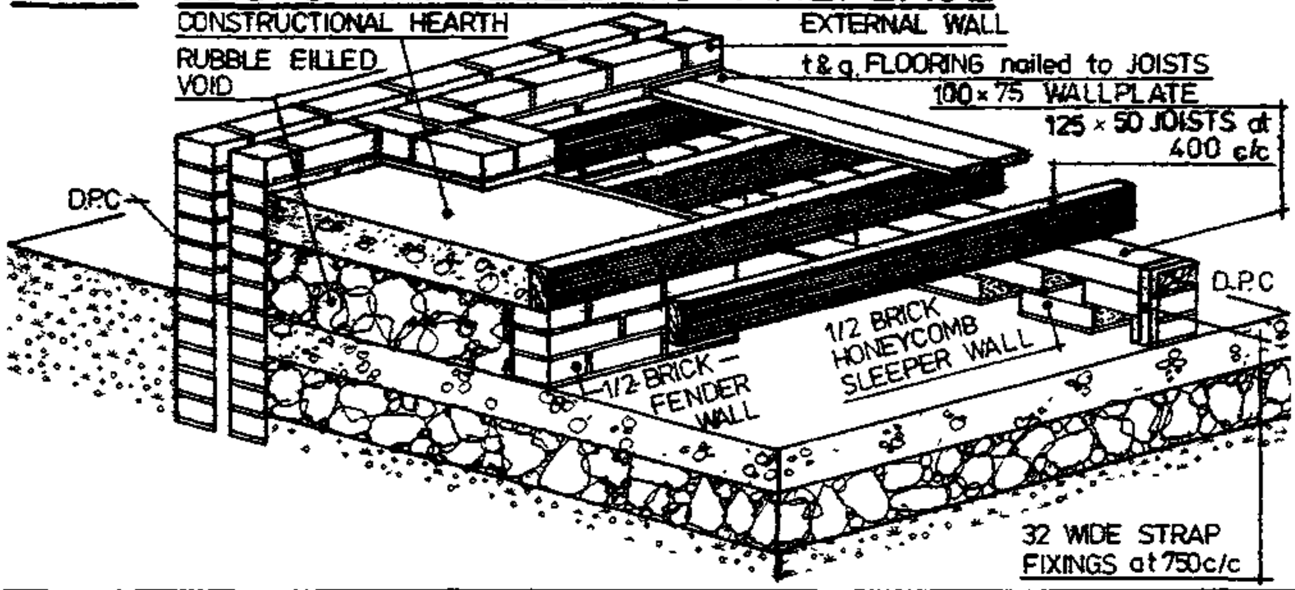

7.32b JOISTS AT RIGHT ANGLES TO FIREPLACE

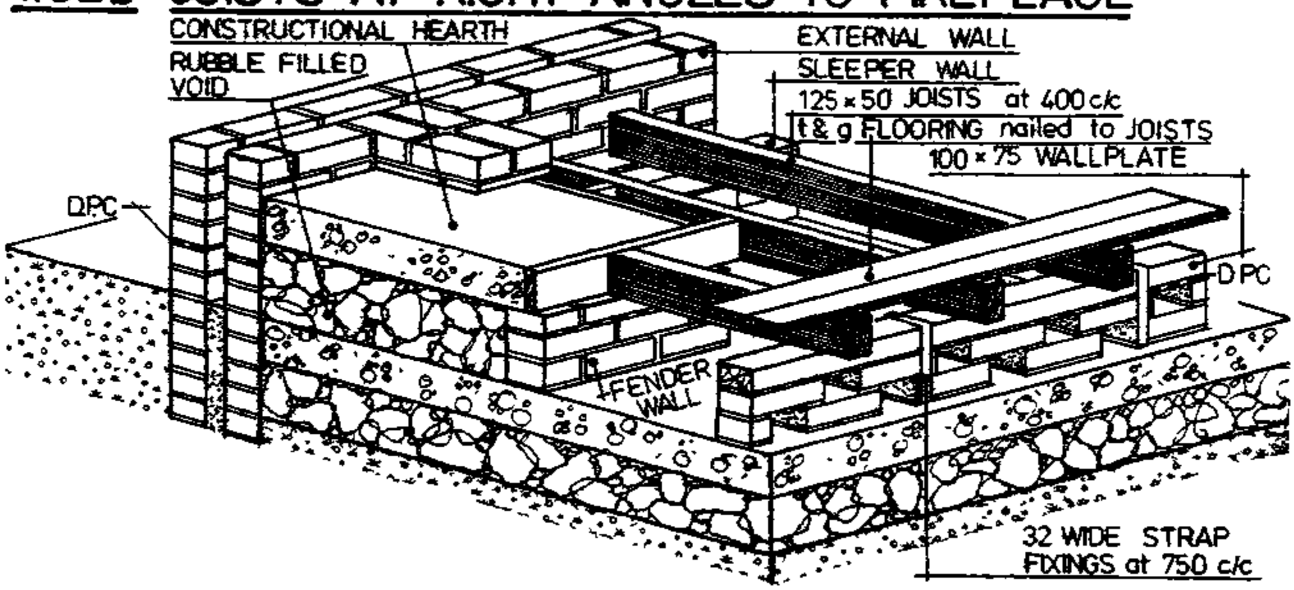

- Constructing ground floors and upper floors, problems of another kind have to be concidered.
  The main differences are:
  1 Ground floor
    - The floor rests directly on the ground
    - Good insulation against <u>moisture</u> is required.
  2 Upper floor
    - The floor is supported only at its edges
    - Good insulation against <u>noise</u> is required.

7.4 UPPER FLOORS

7.41 Types of UPPER FLOORS

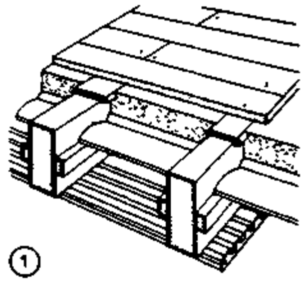

1 Timber joist floor with tree segments and infill ~200-250 kg/m²

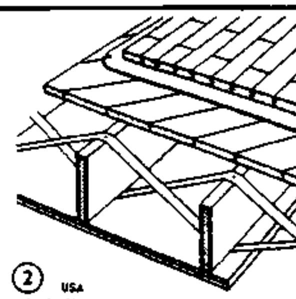

2 USA plank floor with hoop iron bracing, weight without infill 65-90 kg/m²

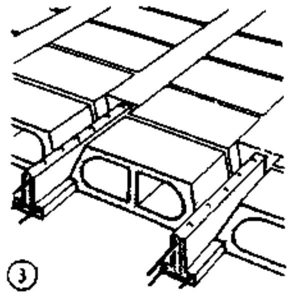

3 r.c. beam floor with non-structural infilling blocks

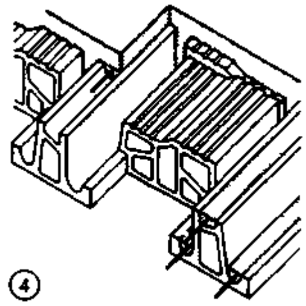

4 Part assembly floor with hollow beams and reinforced cover slabs

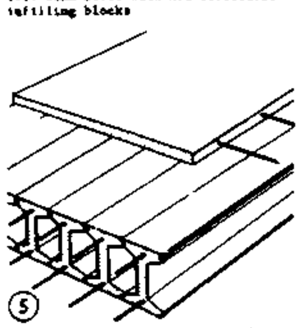

5 Complete assembly r.c. I-beam floor, precast

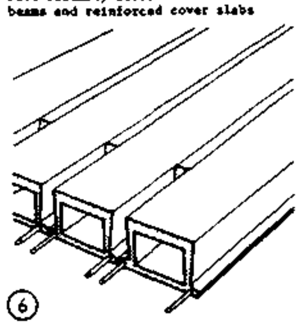

6 Complete assembly r.c. hollow beam floor, precast

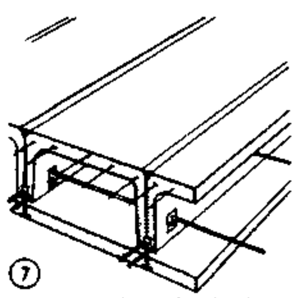

7 U-shaped r.c. beams close butting and bolted give lateral bracing

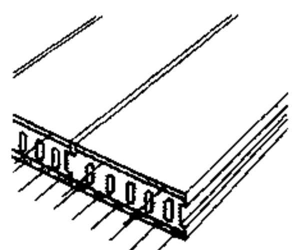

8 Pre-stressed hollow concrete plank floor: 20-30 mm concrete bottom layer with pre-stressed twist steel reinforcement, light weight concrete core and 10 mm concrete cover

7.41 types of UPP. FLOORs

- One can divide types of upper floors into different categories
  - according to the <u>statical system</u>:
    - beam floors
    - slab - beam floors
    - slab - floors
  - according to the <u>kind of construction</u>:
    - constructed on site
    - partly prefabricated
    - prefabricated.
  - according to the <u>material used for construction</u>
    - timber floors
    - concrete or reinforced concrete floors
    - floors made out of masonry or brickwork (arches / domes)
    - floors made out of steel

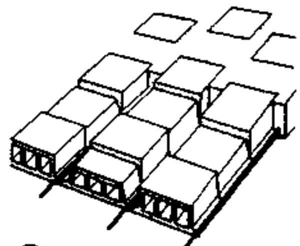

(9) Steel and hollow blocks with extended bottom flange. Ribs and cross jointing of in situ concrete

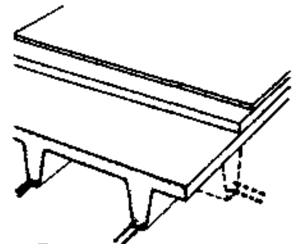

(10) r.c. ribbed floor cast in situ. Ribs c/c ≦ 700 mm, rib width ≧ 50 mm, thickness of slab = 1/10 beam spacing, bearing of beams ≧ 150 mm

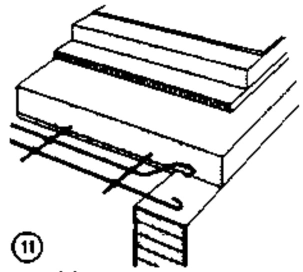

(11) r.c. slab cast in situ, 1 or 2-way reinforcement. ≧ 70 mm thick, economical ≦ 150 mm. With 2-way reinforcement proportion of width to length ≦ 1:1.5

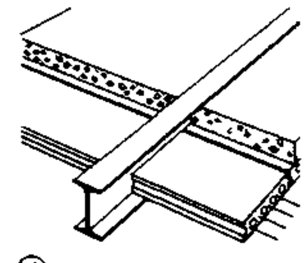

(12) R.S.J. floors with infilling; lightweight or breeze concrete slabs reinforced (900-1 300 mm l, 350 mm w, 65 mm thick), topped with lightweight concrete

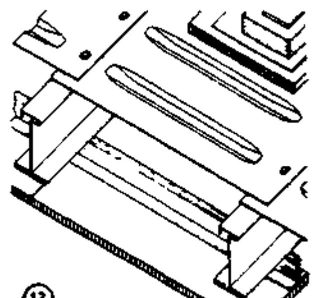

(13) Sheet metal floor for office and industrial buildings. Poor impact noise insulation

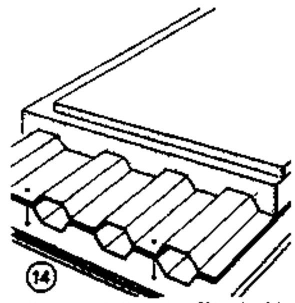

(14) Sheet metal floor in office buildings; good ducting for services; ceiling suspended on hangers and concrete topping give good sound insulation

7.42 Structure of upper floors:

7.42 structure of an UPPER — FLOOR

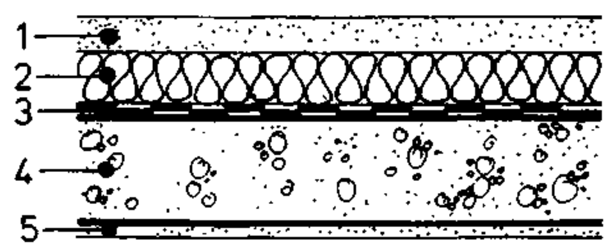

1 FLOOR FINISH
2 INSULATION : thermal or sound
3 BARRIERE LAYER
4 LOAD BEARING MEMBER
5 CEILING

susp. timber UPPER FLOOR

7.43 Suspended Timber upper Floors:

- Timber, being a combustable material, is restricted by Part E of the Building Regulations to SMALL DOMESTIC BUILDINGS as a structural flooring material.
- The construction of suspended timber upper floors is cheap in relation to other structural flooring methods and materials and does not involve WATER for construction.
- Structural soft wood is readily available, easily worked, has a good strength to weight ratio and is therefore suitable for domestic buildings.

7.431 Floor joists

- The load bearing members of a timber floor are the FLOOR JOISTS.
- Terminology
  - Common Joist: a Joist spanning from support to support.
  - Trimming Joist: span as far as common joist, but it is usually 25 mm thicker and supports at TRIMMER JOIST.
  - Trimmer Joist: a joist at right-angles to the main span supporting the TRIMMED JOISTS and is usually 25 mm thicker than a comman joist.
  - Trimmed Joist: a joist cut short to form an opening and is supported by a trimmer joist, it spans in the same direction as common joists and is of the same section size.

7.431

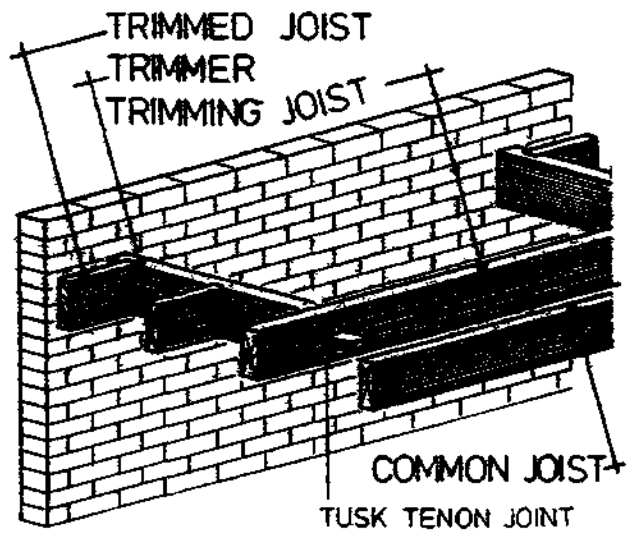

7.431 SPACING OF JOISTS

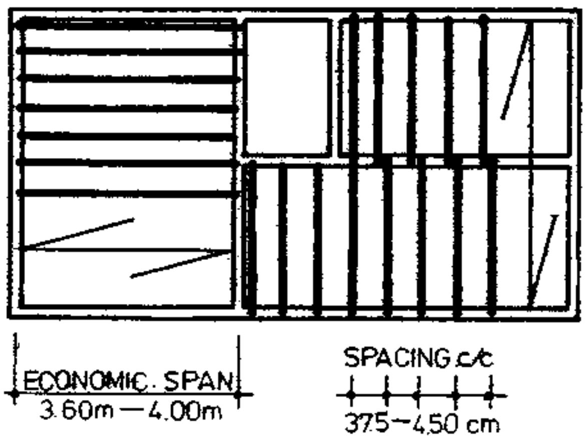

- Spacing of the Joists
  - The spacing of the joists is usually from 37,5 cm to 450 cm, measured from the centre of one joist to the next.
  - To economise in the use of timber the floor joist of upper floors usually span (are laid across) the least width of rooms from external wall to internal partitions.
  - The maximum economical span for timber joists is between 3.60 m and 4 m. For greater spans (than about 4,5 m) it is usually economic to reduce the span of the joist by the use of steel beam or timber binders, which is known as DOUBLE FLOOR CONSTRUCTION.

7.431 a DOUBLE FLOOR DETAILS

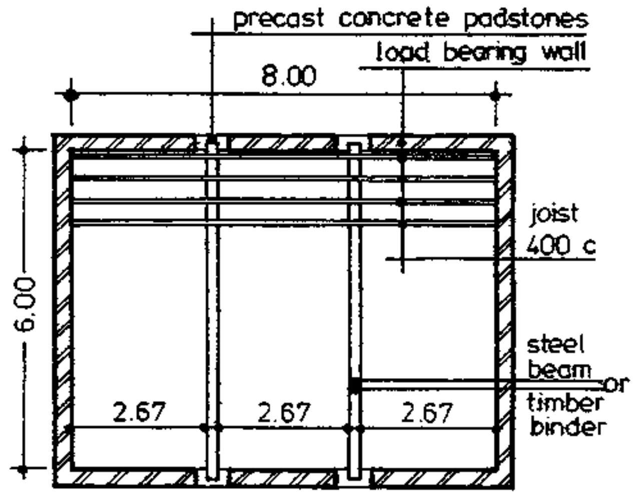

DOUBLE FLOOR LAYOUT

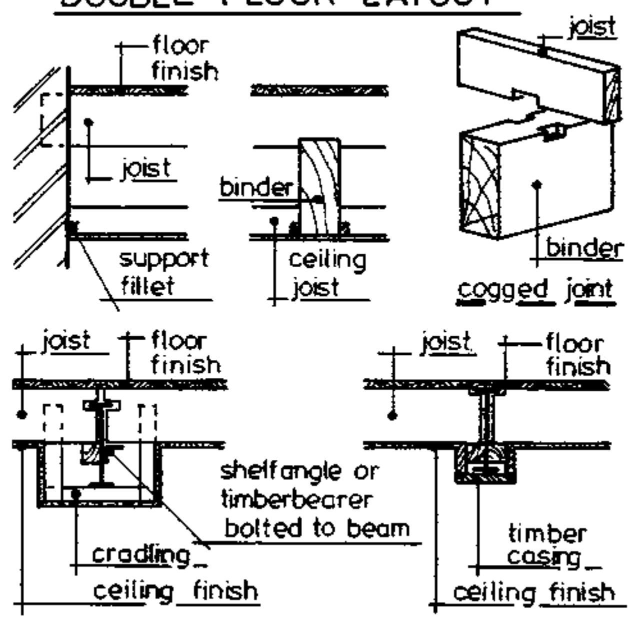

DETAILS USING TIMBER BINDER OR STEEL BEAM

7.FLOORS compiled: D.VOLKE OCT. '80	SPACING OF JOISTS DOUBLE FLOOR DETAILS	BUILDING CONSTR. — LECTURE — CET 2031/1 7.4 11
TCA TECHNICAL COLLEGE ARUSHA CHUO CHA UFUNDI ARUSHA	CIVIL-ENGINEER. DEPARTMENT	

- Strutting between joists: Timber shrinks when it is seasoned and timber - such as floor joists - which is not cut on the radius of the circle of log does not shrink uniformly. The shrinkage will tend to make the floor joists twist, or wind, and to prevent cracking of a plaster ceiling which this twisting would cause, timber strutting is used.

The commonly used type is

- HERRINGBONE STRUTTING
  This consists of short lengths of 4 x 4 cm soft-wood timber nailed between the joists.
- Alternatively a system of solid strutting is sometimes used. This consists of short lengths of timber of the same sections as the joists which are nailed between the joists - either in line or staggered

  It is not as effective as the herringbone system, because the solid lengths have to be cut very accurately to fit to the sides of the joists; they do not firmly strut between the joists.
- As with herringbone strutting the end joists are blocked and wedged up to the surrounding walls.
- Usually: one set of struts is used for joists spanning up to 3,60m and two sets of struts are used for joists spanning more then 3.60 m.

  A single set of struts is fixed across the floor at mid span.

STRUTTING ARRANGEM.'S

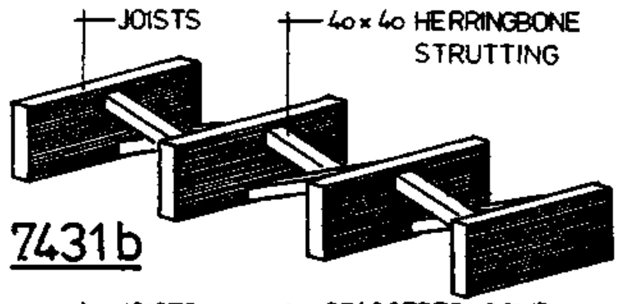

7431b

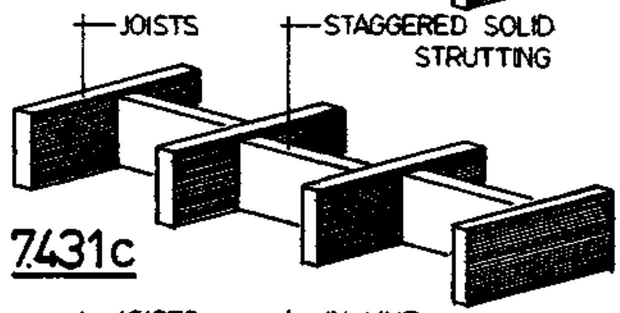

7431c

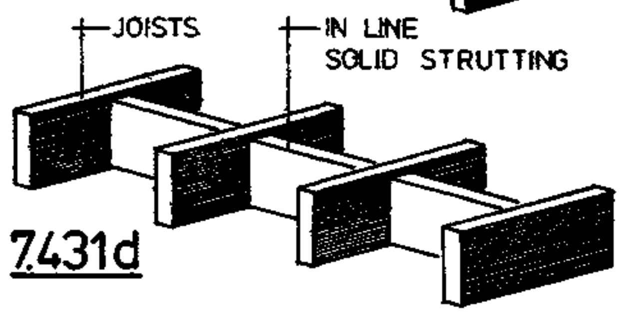

7431d

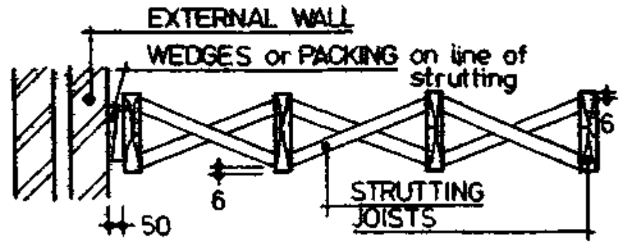

7431e

7 FLOORS compiled D VOLKE OCT '80	STRUTTING	BUILDING CONSTR LECTURE CET 2031/1 74 12
TCA TECHNICAL COLLEGE ARUSHA CHUO CHA UFUNDI ARUSHA	CIVIL-ENGINEER DEPARTMENT	

JOIST SIZING

- <u>Joist Sizing:</u>

  There are three ways of selecting suitable joists for supporting a domestic type floor:

  1. Rule of Thumb:

     $$\frac{\text{span in mm}}{24} + 50\text{mm} = \text{depth in mm}$$

  2. Calculation:

     $$BM = \frac{fbd^2}{6}$$

     where
     BM = bending moment
     f = max fibre stress
     b = breadth (assumed to be 50 mm)
     d = depth in mm

  3. Building Regulations, Table 1, Schedule 6.

TABLE 1

FLOOR JOISTS

GS, MGS, M50, M75 or No. 2 Grade Timber

Size of joist (in mm)	Dead load (in kg/m²) supported by joist, excluding the mass of the joist								
	Not more than 25			More than 25 but not more than 50			More than 50 but not more than 125		
	Spacing of joists (in mm)								
	400	450	600	400	450	600	400	450	600
	Maximum span of joist (in m)								
38 × 75	1·05	0·95	0·72	0·99	0·90	0·69	0·87	0·79	0·62
38 × 100	1·77	1·60	1·23	1·63	1·48	1·16	1·36	1·24	1·00
38 × 125	2·53	2·35	1·84	2·33	2·12	1·69	1·88	1·73	1·40
38 × 150	3·02	2·85	2·48	2 83	2·67	2·26	2·41	2·23	1·83
38 × 175	3·51	3·32	2·89	3·29	3·11	2·71	2·82	2·66	2·27
38 × 200	4·00	3·78	3·30	3·75	3·55	3·09	3·21	3·03	2·64
38 × 225	4·49	4·24	3·70	4·21	3·98	3·47	3·61	3·41	2·96
44 × 75	1·20	1·08	0·83	1·13	1·02	0·79	0·98	0·89	0·70
44 × 100	2·01	1·82	1·41	1 83	1·67	1·31	1·51	1·39	1·12
44 × 125	2·71	2·56	2·09	2·54	2·38	1·90	2·08	1·92	1·56
44 × 150	3·24	3·06	2·67	3·04	2·87	2·50	2·60	2·45	2·03
44 × 175	3·77	3·56	3·10	3·53	3·34	2·91	3·02	2·86	2·48
44 × 200	4·29	4·06	3·54	4·02	3·80	3·31	3·45	3·26	2·83
44 × 225	4·81	4·55	3·97	4·51	4·27	3·72	3·87	3·66	3·18
50 × 75	1·35	1·22	0·93	1·26	1·14	0·89	1·08	0·99	0·78
50 × 100	2·22	2·03	1·58	2·03	1·85	1·46	1·66	1·53	1·23
50 × 125	2·84	2·72	2·33	2·70	2·55	2·10	2·27	2·09	1·71
50 × 150	3·40	3·26	2·84	3·23	3·05	2·66	2·76	2·61	2·21
50 × 175	3·95	3·78	3·30	3·75	3·55	3·09	3·22	3·04	2·64
50 × 200	4·51	4·31	3·76	4·27	4·04	3·52	3·67	3·46	3·01
50 × 225	5·06	4·83	4·22	4·79	4·53	3·95	4·11	3·89	3·39
63 × 150	3·66	3·52	3·17	3·50	3·38	2·97	3·09	2·92	2·54
63 × 175	4·25	4·10	3·68	4·07	3·93	3·45	3·59	3·40	2·96
63 × 200	4·84	4·67	4·20	4·64	4·48	3·93	4·09	3·87	3·37
63 × 225	5·43	5·24	4·70	5·21	5·02	4·41	4·59	4·34	3·78
75 × 200	5·10	4·93	4·51	4·90	4·72	4·27	4·43	4·20	3·67
75 × 225	5·72	5·52	5·06	5·49	5·30	4·79	4·97	4·71	4·11

END SUPPORT: FLOOR JOISTS

7,432 End Support of Floor Joists

The end of timber floor joists must in some way either be built
- into or
- supported against

load bearing partitions and external walls.

- The most commonly used method of giving support to the ends of timber floor joists is to build them <u>into</u> walls and partitions.
  - There was a common practice to build the joistends some 10 cm into walls and partitions and to pack up under each joist with <u>small peaces of slate or tile</u> so that the top of the joists are level, if the underside of the joist does not comply with a brick course.
    - Distadvantage: displacing of tiles - out of level.

END SUPPORT OF FLOOR JOISTS

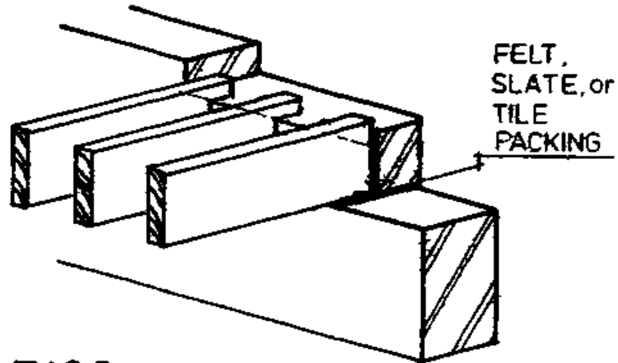

7.432 a BUILT INTO

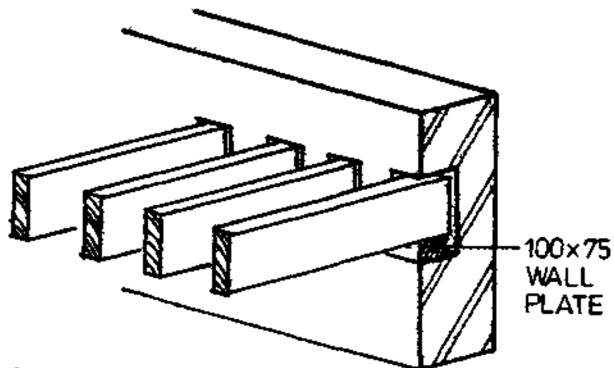

7.432 b BUILT INTO

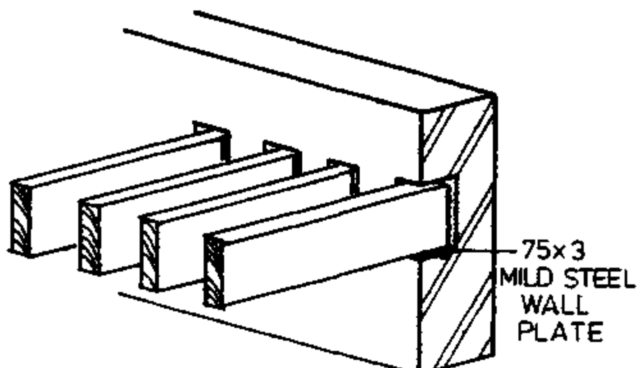

7.432 c BUILT INTO

BUILT INTO

- A better solution is to build a wallplate (100 x 75 mm) into the wall as shown in Fig. 7.432 B
- Another possibility is the use of a mild steel wallplate(75 x 3 mm) as demonstrated in fig. 7.432 C.

SUPPORTED AGAINST

- If the ends of timber floor joists are built into a solid external wall, 1 brick thick, there is only 1/2 brick between the ends and the rain falling on the outside of the wall.
  Therfore: Joists will at time become saturated and then: the dry rot fungus may attac.
  This danger can be reduced by painting the ends of the joists with <u>oily preservative</u>.
  If the external wall is of cavaty construction, the joist-ends must not run into or across the cavaty (moisture!!).

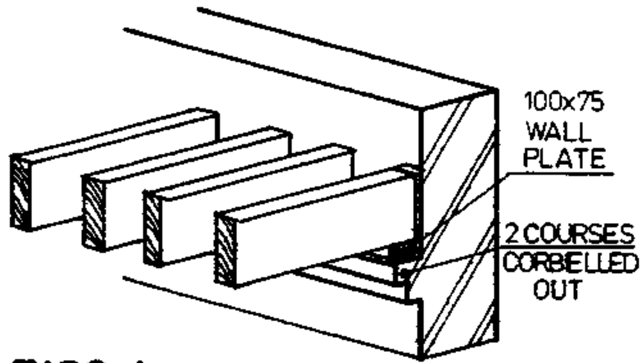

7432 d SUPPORTED AGAINST

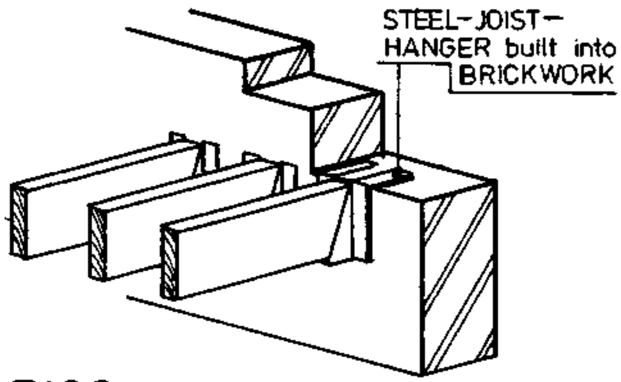

7432 e SUPPORTED AGAINST

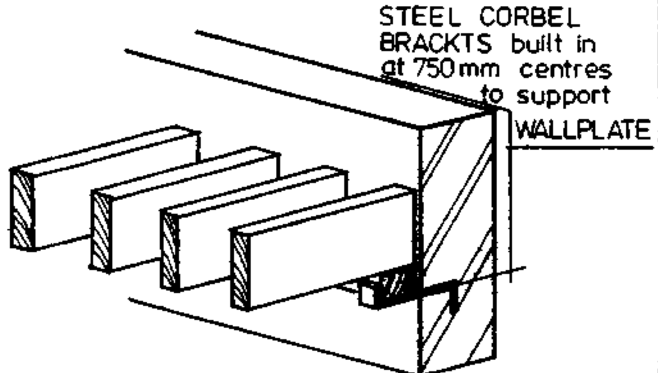

7432 f SUPPORTED AGAINST

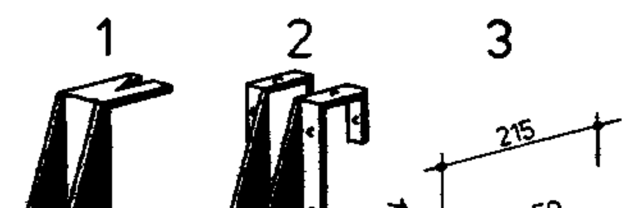

1+2 GALV. PRESSED STEEL JOIST HANGERS
3 CORBEL BRACKED

7432 g

7. FLOORS compiled: D.VOLKE OCT. '80	END SUPPORT of FLOOR JOISTS	BUILDING CONSTR. — LECTURE — CET 2031/1 7.4 15
TCA	TECHNICAL COLLEGE ARUSHA CHUO CHA UFUNDI ARUSHA	CIVIL-ENGINEER. DEPARTMENT

7.433 Trimming:

- This is a term used to describe the framing of joists around an opening of projection. Various joints can be used to connect the members together, all of which can be substituted by JOIST HANGERS.
- Typical trimming joints and arrangements are shown in Fig. 7433

TRIMMING

7433 TRIMMING ARRANGE-M.

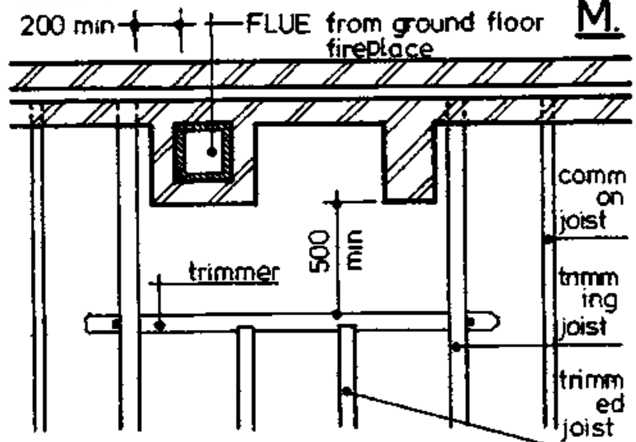

TRIMMING TO UPPER FLOOR FIREPLACE

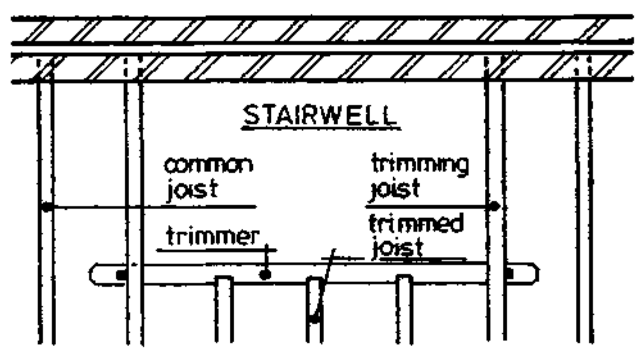

TRIMMING TO STAIRWELL

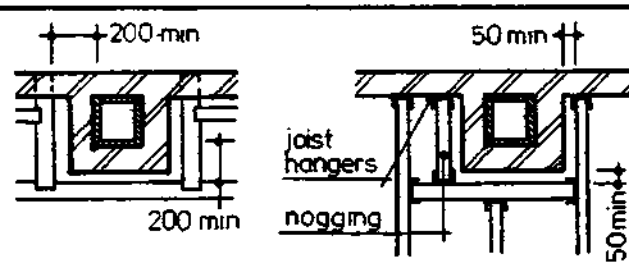

TRIMMING AROUND FLUES

FLOOR TRIMMING JOINTS 7433

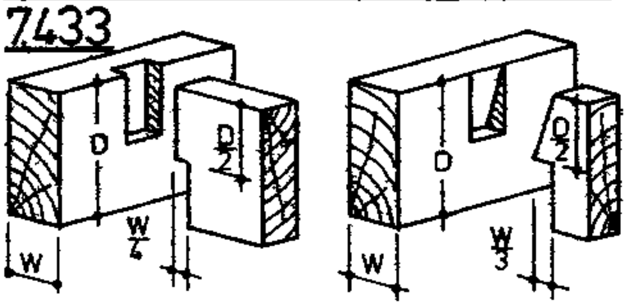

HOUSED JOINT BEVELLED HOUSED JOINT

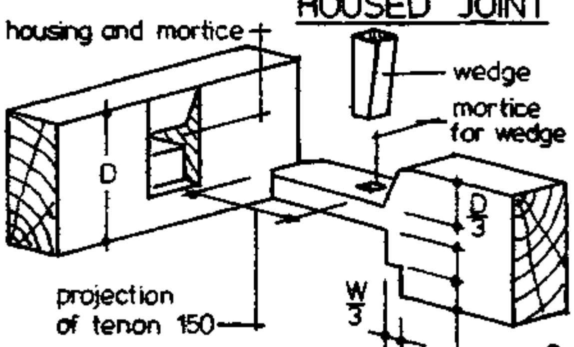

TUSKED TENON JOINT

7. FLOORS	TRIMMING	BUILDING CONSTR.
compiled : D'VOLKE		LECTURE
OCT. '80		CET 2031/1 7.4 16

TCA TECHNICAL COLLEGE ARUSHA CHUO CHA UFUNDI ARUSHA — CIVIL-ENGINEER. DEPARTMENT

REINFORCED CONCRETE upper floors

7.44 Reinforced concrete upper floors.

- Reinforced concrete floors have a better resistance to demage by fire and can safely support greater superimposed loads than timber floors. Therefore they are used for most offices, larger blocks of flats, factories and public buildings.
- There are many different types of reinforced concrete floors. Some of the most common r.c. upper floors are demonstrated in the following

7.441 Monolithic Reinforced Concrete Upper Floor

A monolithic r.c.floor is poured 'in situ' on formwork, consisting of concrete and reinforcement steel bares. After drying out it becomes a new "monolithic" building material: REINFORCED CONCRETE which is capable to resist both <u>compression</u> and <u>tension</u> forces.

- R.C. upper floors are in most cases between 10 cm und 30cm thick
- Usually mild steel is used for reinforcement (either bares or mats)
  Reinforcement and concrete mix have to be in accordance with the statical calculations.
- Disadvantages of Monolithic R.C. Upper Floors:
  - Need Forwork
  - Time taken for the concrete to cure before formwork can be released
  - very little is contributed by a large portion of concrete to the strength of the floor.
- Fig. 7.441 showes an typical example of a monolithic r.c. upper floor.

7441 MONOLITHIC R.C. UPPER FLOOR

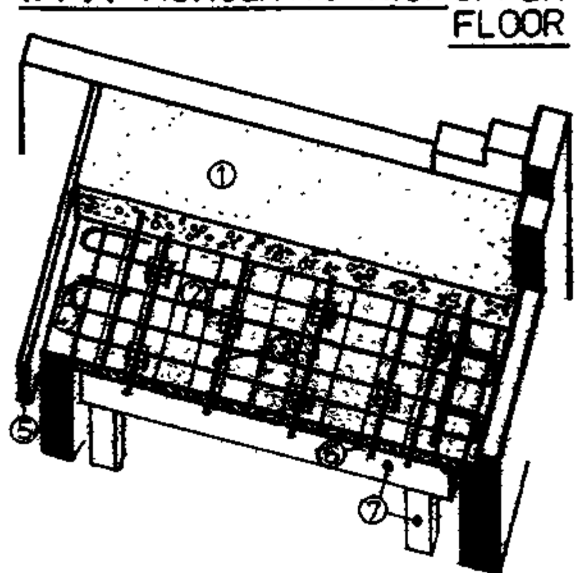

1 CONCRETE CAST IN SITU
2 MAIN REINFORCEMENT BARS (150 c/c)
3 DISTRIBUTION BARS (450 c/c)
4 ENDS OF BARES BENT UP
5 TIMBER FORMWORK
6 TIMBER CENTERING
7 TIMBER SUPPORT FOR CENTERING

PRECAST CONCRETE upper floors

7.442 Precast Concrete Upper Floor

- Floors composed of reinforced precast concrete units have been developed over the years to overcome some (or all) the disadventages of monolithic reinforced concrete slab.
  To realise the full economy of any one particular precast flooring system the design of the floors should be within the SPAN, WIDTH, LOADING and LAYOUT LIMITATIONS of the units under consideration.
- The systems available can be considered either PRECAST HOLLOW FLOORS or COMPOSITE FLOORS.

• <u>Precast hollow floors</u>
  Units are available in a variety of sections such as boxplanks or beams, tee sections, I-beam sections and channel sections.

- The economies which can be reasonable expected over the 'in situ' floor are:
  1.50 % reduction in the volume of concrete
  2.25 % reduction in the weight of reinforcement
  3.10 % reduction in the size of foundations.
- The units are cast in precision moulds, around inflatable formers or framed plastic cores.
- The units are laid side by side with the edge joints being grouted together.
- No structural topping is required, but the upper surface of the units are usually screeded to provide the correct surface for the applied finishes.
- Means of mechanical lifting is required to offload and position the units.
- Hollow units are normally the cheapest form of precast concrete suspended floors for simple straight spans with beam or wall supports to maximum a span of 20 m.
- They are not suitable for heavy point loads.

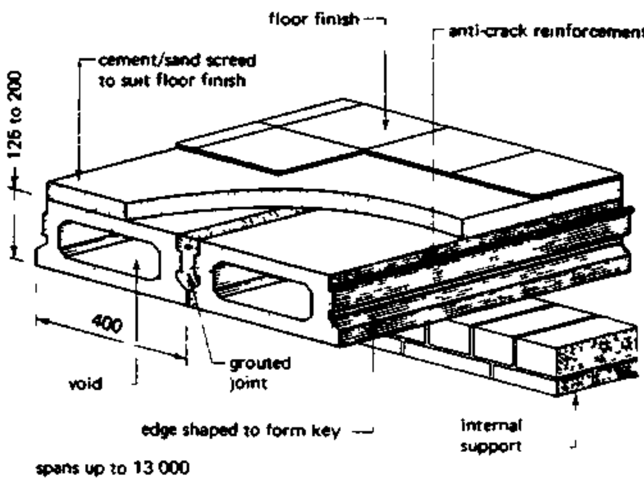

Typical hollow floor unit details

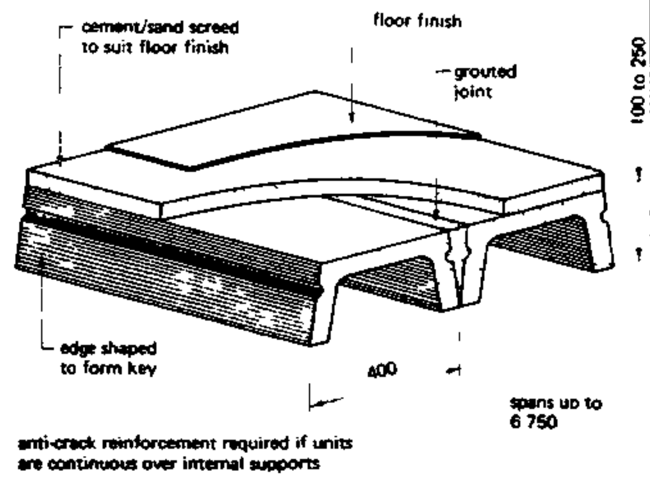

Typical channel section floor unit details

Precast concrete hollow floors

COMPOSITE FLOORS

- Composite floors.

  Are a combination of PRECAST UNITS and IN SITU CONCRETE.

- The precast units (usually prestressed or reinforced with high yield steel bars) are used to provide the strength of the floor and at the same time act as a permanent form-work to the in situ topping which provides the compressive strength required.
  It is essential that an adequate bond is achieved between the two components (in most cases this is provided by the upper surface texture of the precast units).

- Generally there are two forms of composite floors:
  1. Thin pressed planks with a side key and covered with an in situ topping
  2. Reinforced or prestressed narrow beams which are placed at 600 mm centres and are bridged by concrete filler blocks.
     The whole combination being covered with in situ topping.
     Most of the beams used in this method have shear reinforcing cage projecting from the precast beam section.

- In both forms temparary support should be given to the precast units by props at 1,80 m to 2,40 m centre until the in situ topping has cured.

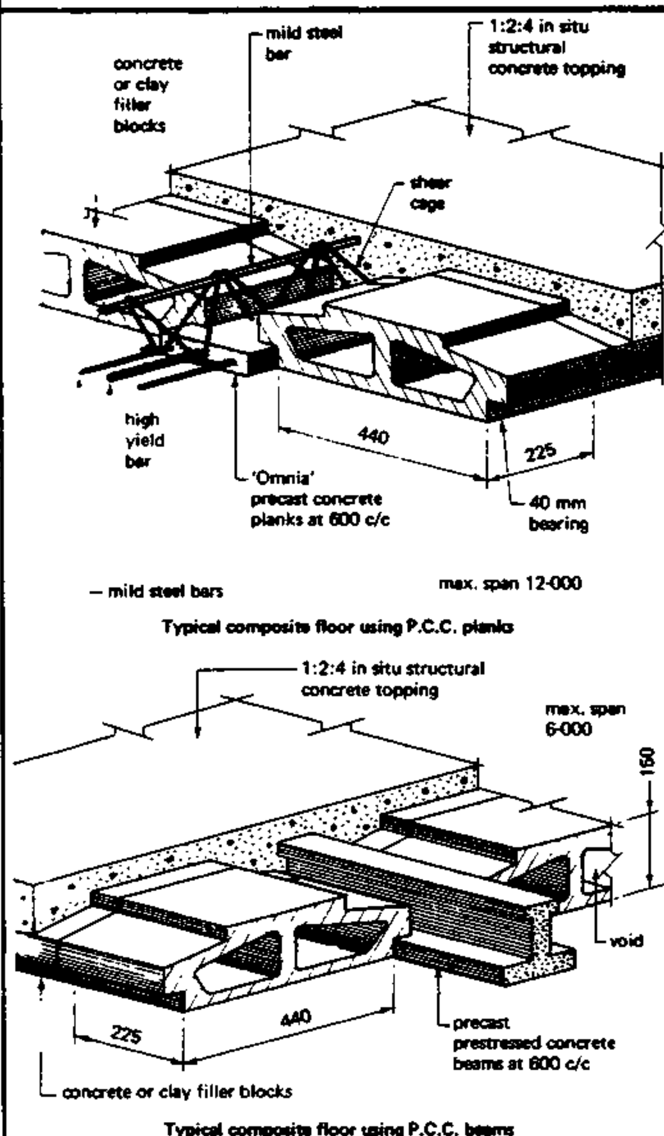

Typical composite floor using P.C.C. planks

Typical composite floor using P.C.C. beams

Composite floors

7 FLOORS compiled: D.VOLKE OCT. '80	COMPOSITE FLOORS	BUILDING CONSTR. LECTURE CET 2031/1 74 19
TCA TECHNICAL COLLEGE ARUSHA CHUO CHA UFUNDI ARUSHA	CIVIL-ENGINEER. DEPARTMENT	

HOLLOW-BLOCK & WAFFLE FLOORS

7.443 Hollow Block and Waffle Floors.

- Precast concrete suspended floors are generally considered to be for light to medium loadings spanning in one direction.
  HOLLOW BLOCK (or hollow pot) and WAFFLE (or honeycomb) FLOORS can be used as an alternative to the single spanning precast floor since they can be designed to carry heavier loadings.
  They are in fact RIBBED FLOORS consisting of closely spaced narrow and shallow beams giving an overall reduction in depth of the conventional reinforced concrete monolithic beam and slab floor.

- HOLLOW BLOCK FLOORS

- These are formed by laying over conventional floor soffit formwork a series of hollow light weight clay blocks (or pots) in parallel rows with a space between these rows to form the ribs.
- The blocks act as permanent formwork giving a flat soffit suitable for plaster application and impact to the floor good thermal insulation and fire resistance.

- The ribs formed between the blocks can be reinforced to suit the loading concitions of the floor.

- The main advantages are:
  its light weight
  its relatively low cost.

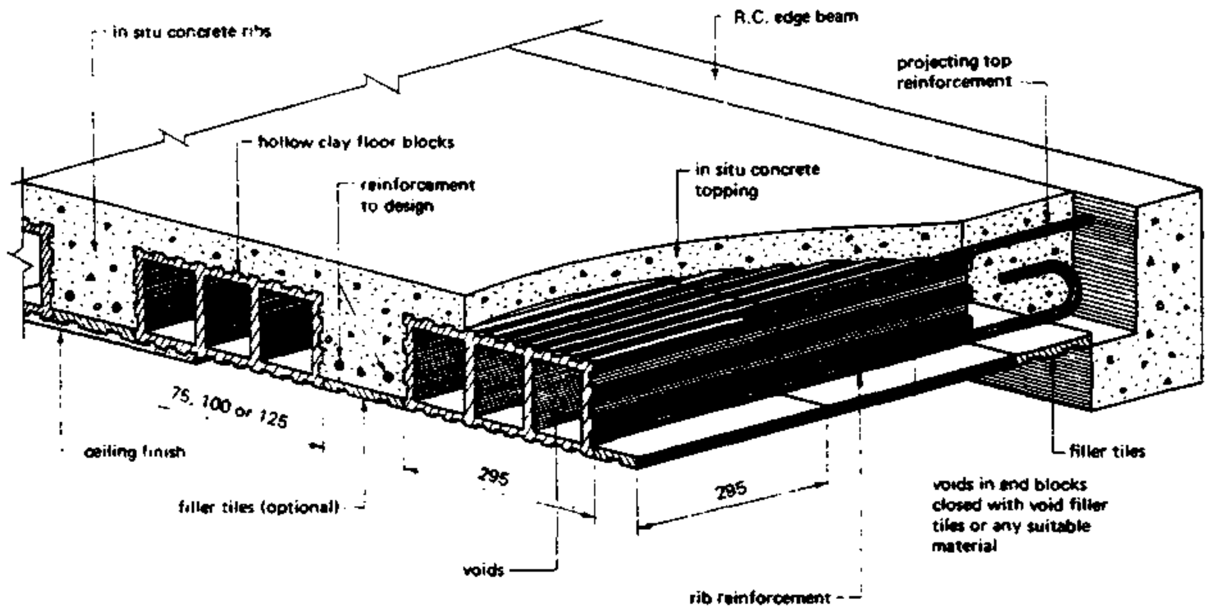

WAFFLE or HONEYCOMB floors

. WAFFLE FLOORS

- These are mainly used as an alternative to an in situ flat slab or a beam and slab suspended floor, since it requires less concrete, less reinforcement and can be used to reduce the number of beams and colums required.
- The honeycomb pattern on the underside can add to the visual aspect of the ceiling by casting attractive shadow pattern.
- The floor is cast over light weight moulds or pans made of glass fibre, poly-propylen or steel forming a TWO DIRECTIONAL FLOOR.
- The reinforcement in the ribs is laid in two directions to resist both consitudinal and transverse bending moments in the slab.
- It is advisable to allow for a floor screed to be applied to the in situ topping at a later stage in the contract prior to the fixing of the applied finish.

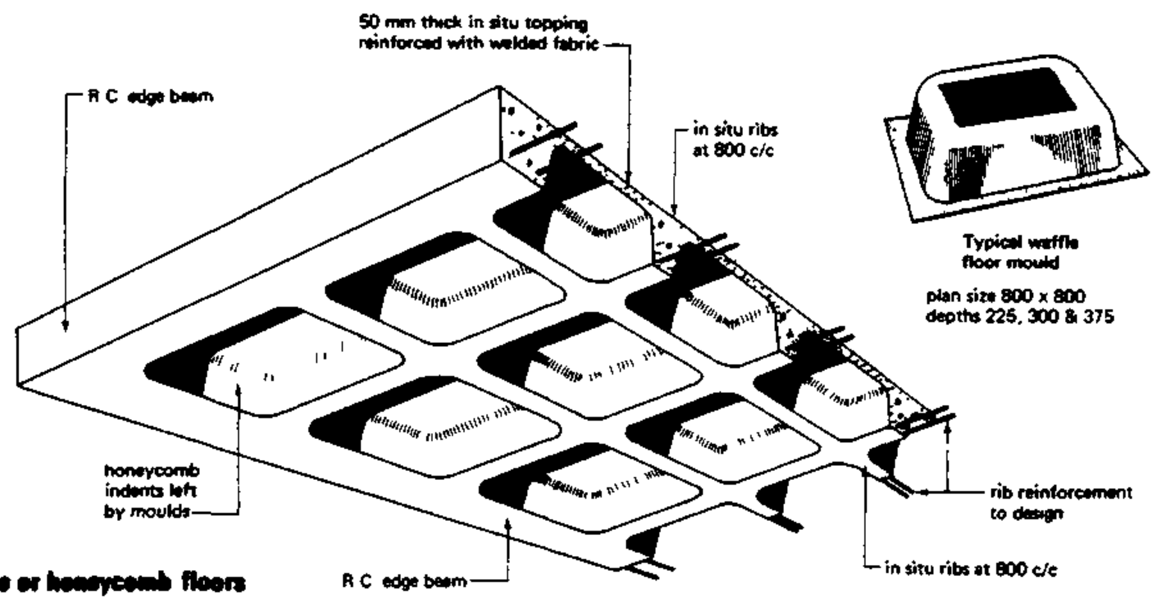

Waffle or honeycomb floors

7 FLOORS compiled D.VOLKE OCT. '80	WAFFLE FLOORS	BUILDING CONSTR — LECTURE — CET 2031/1 74 21
TCA TECHNICAL COLLEGE ARUSHA CHUO CHA UFUNDI ARUSHA	CIVIL-ENGINEER. DEPARTMENT	

FLOOR FINISHES

7.5 Floor finishes

- Floor finishes may be classified into four categories:
  1. Jointless floor finishes
  2. slab floor finishes
  3. sheet floor finishes
  4. wood floor finishes
- The choice will depend on many factors; e.g. cost, durability, colour, hardness, slipperness, resistance to oils, acids, heat, sunlight, abrasion, noise and ease of maintenance.

7.51 Jointless floor finishes

7.511 The most common of these is the CEMENT / SAND SCREED. It will give a suitable finish especially for bare feet and sandals.

- There are different ways of construction:

7.511 a Monolithic Construction

The screed is laid on the in situ concrete base within 3 hours (before it has set). In that case, a complete BONDING is obtained

- screed and base shrink together
- Thickness of the screed: only 12 mm necessary, on application thicker than 25mm has to be avoided, in order to restrict shrinkage forces from the SCREED.
- it will be the best solution to eliminate cracking and curling but...
- a proper planning (at the design stage) and complete PROTECTION of the area where screed has been applied is necessary.

JOINTLESS FLOOR FINISHES

7511a

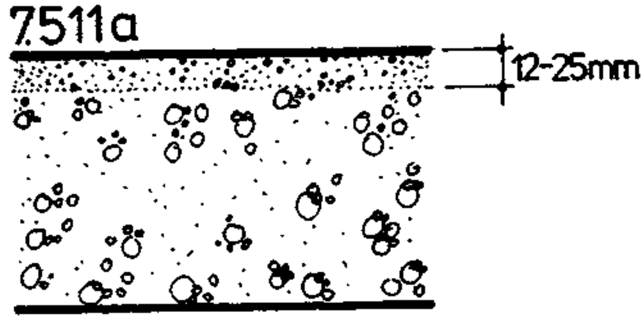

MONOLITHIC CONSTRUCTION

7.511b Seperate Construction

Once the concrete has set, monolithic construction can no longer be used.

- The strength of the bond between screed and base will depend on the way the base has been prepared.

  To achieve a maximum bonding, the base has to be
  - hacked (by mechanical means)
  - cleaned
  - damped (to reduce suction) and
  - grouted (or a bonding agent can be used)
- Minimum thickness : 40 mm.

7511b

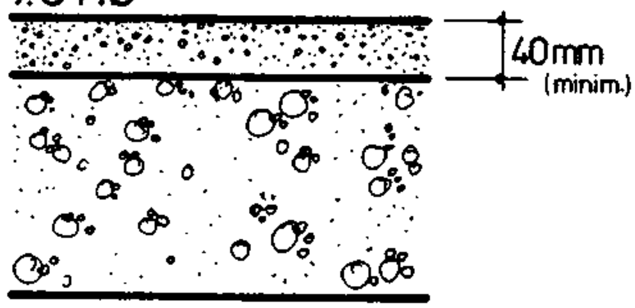

SEPERATE CONSTRUCTION

7.511c Unbonded Construction

If it is not possible to achieve a bond between base and screed (i.e. in case of an screed appli - cation on top of a damp-proof-membrane) the screed layer has to be applied thicker

- Mininum thickness 50 mm.

7511c

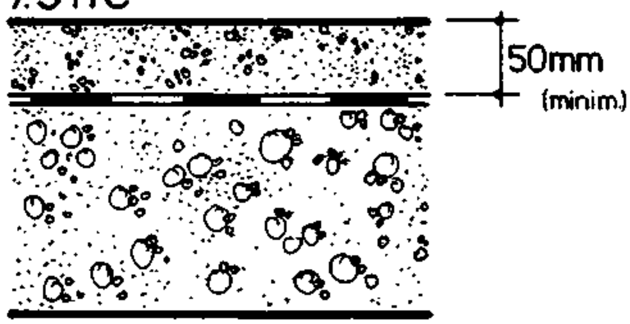

UNBONDED CONSTRUCTION

7.511 d Floating Construction

Is a screed to be laid on compressible layers of thermal or sound insulation, the material should be applied to a

- minimum thickness 65 mm.

7511d

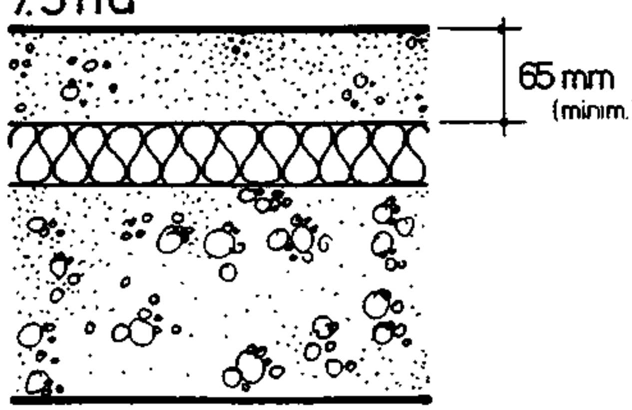

FLOATING CONSTRUCTION

FLOOR SCREEDS

GRANOLITHIC CONCRETE FINISHES

7.511 e <u>Division into bays</u>

In order to avoid cracking and to reduce curling screed should be laid in alternate bays.

- The bay sizes should not be more then 15 m^2.
- The ratio between the sides of the bays may be approxemately 1:1 1/2. - long, narrow bays to be avwoided.
- Expansion joints are required only where similar joints are provided in the main structure.

7.511f <u>Mix designs</u>

- For screeds up to 4o mm, mixtures of 1 : 3 up to 4 1/2 cement / sand are used. (mixes less rich in cement will cause LOWER SHRINKAGE)
- For thicker screeds: FINE CONCRETE of 1 : 1 1/2 : 3 (cement fine aggregate: coarse aggregate) may be applied. The maximum size for coarse aggregate is 10 mm.

7.512 <u>Granolithic concrete finishes</u>

is used where a more durable surface is needed and suitable granite chippings are available.

- It is laid about 30 mm thick in the same way as cement sand (1 part cement : 3 parts granolithic) and trowelled smooth.
- It is used for paved areas, yards, factories, warehouses, and balconies.
- It should be kept damp and protected from hot sun for at least 24 hours after laying and cured for 3 days afterwards.
- Where a non-slip surface is needed, CARBORUNDUM may be spread into the granolithic finish while it is still green.
- Surface hardeners are often applied to granolithic and cement and sand floors. One type of hardener consists of 1 volume of sodium silicate to 4 volumes of water sprayed on after the concrete has set.
- Two applications are usual.
- For heavy industrial floors, especial steel or plastic grids may be inserted which divide up the floor into TILES.
- Synthetic plastics may also be used in place of granite chippings and give a pleasing finish.

TERRAZZO

SLAB FINISHes

7.513 TERAZZO
consists of 2 parts marble chippings of various colours and 1 part (white) Portland cement; laid about 12 mm thick on a screed of cement/sand (1:4).

- Strips of brass or plastic are bedded into the screed and left standing to divide the terrazzo into bays (1-2m^2)
- The floor is ground smooth with a carborundum machine, or by hand, after it has hardened.
- Plastic pellets are also used in place of marble chippings. Synthetic resins and plastics are available in paste form and can be laid 6 mm thick on screeded floors. They have the advantage of being non-slippery when wet.
- It is important that both mixingbays and materials be kept clean and free from soil, otherwise the floor finish will show stains.

7.52 Slab Floors finisehes

- natural stone slabs and slates
- quarry and vitreous tiles

The vitreous types are of better quality than quarry and are produced in brighter colours and patterns. The surface can be smooth or ribbed.

Tiles should be soaked and bedded on to a damp screed and tamped into position with a short straight - edge.
The joints are grouted and the floor cleaned off. It should NOT be used for several days.

- Concrete tiles make a durable floor and are produced in many colours. Even TERAZZO TILES are widely used.
- PVC and vinyl-asbestos tiles

  are light and obtainable in plenty of different colours. The screed is coated with a primer and tiles stuck with adhesive.
  Care must be taken not to lay on too thick a coating of abhesive, because this may ooze through the joints in hot climates and look unsightly.
  As they are grease- and oil - proof, thermoplastic tiles are used in factories, hotels, kitchens and garages.
- Marble mosaic floors can be laid in many patterns: Pieces of marble of varying colours, about 25 mm square, are pushed into a soft screed of mortar to create the pattern.
  This is very highly skilled work. The mosaics can be also sticked to sheets of stiff paper on which the pattern has been drawn. The sheets are cut up, numbered and pressed - TILES DOWNWARDS - into the soft screed.
  When set, the paper is soaked off and the joints are filled with grout.

SHEET FLOOR FINISHES

7.53 Sheet Floor finishes

- Linoleum
- Cork and
- Rubber are satisfactory coverings.
- Plastic floor coverings are now also widely used. PVC flooring takes several forms: it can be supplied in rolls of about 2o m length and a width between 9oo and 18oo mm wide. It is stuck down with a proprietary adhesive.

WOOD FLOOR FINISHES

7.54 <u>Wood floor finishes</u>

- Boarded floor finishes, tounged and grooved flooring boards, 2,5 mm thick and 5 cm to 15 cm wide are nailed on wood bearers.
- Wood-blocks (common measurements are 23x7,6x2,5cm) are laid in numerous patterns and are stuck on to a dry screeded floor with pitch mastic.
- Wood-mosaic consists of strips of hardwood (120 x 2,5 x 10.o cm) arranged in 12 cm squares to form a basket-weave pattern. They are laid similar to wood-blocks, and finished with a sanding maschine.
- Wood pavement is a very durable wood floor finish. The cross-cut end of small wood blocks (6x6x6 cm, 8x8x6, 8x25x6 cm) are exposed to the floor surface and laid in soft asphalt or stuck on to a dry, screeded floor with pitcemastic. For decoration even round sections of wood blocks (up to a diameter of a about 30 cm) are used, the joints are grounted and the surface sanded and polished.

1 NATURAL STONE SLABes
-irregular

2 NATURAL STONE SLABes
-roman bond

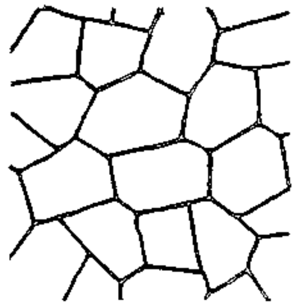

1

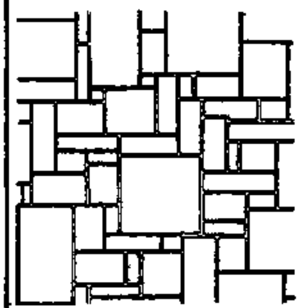

2

3 ARTIFICIAL STONE SLABes
with gutter and frieze

4 QUARRY or VITREOUS TILEs
hexagonal; with frieze

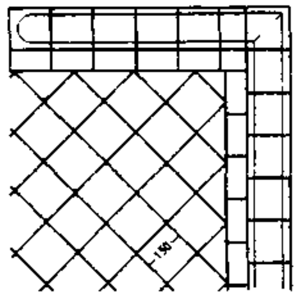

3

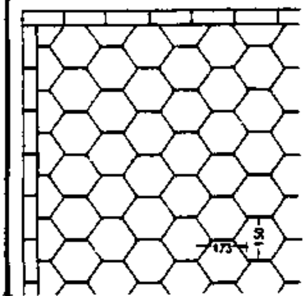

4

5 PVC, FLOORFLEX, LINOLE
UM TILES

6 WOOD-PAVEMENT

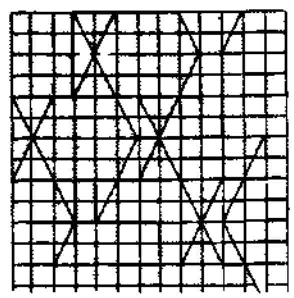

5

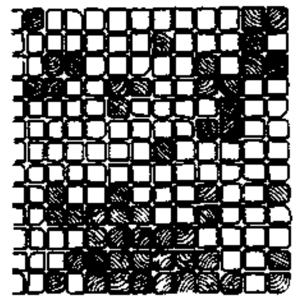

6

7 BOARDED FLOOR FINISH
-tounged & grooved

8 WOOD-BLOCKS

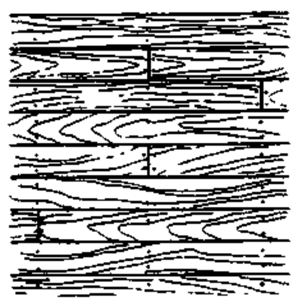

7

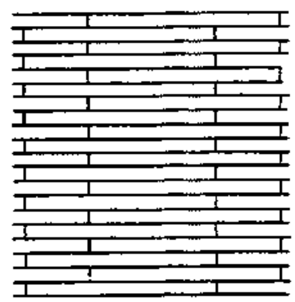

8

9 & 10 WOOD-MOSAIC

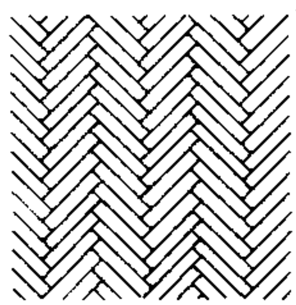

9

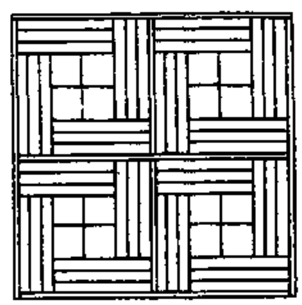

10

7. FLOORS compiled: D.VOLKE OCT. '80	FLOOR FINISHES	BUILDING CONSTR. — LECTURE — CET 2031/1 75 27

TCA TECHNICAL COLLEGE ARUSHA
CHUO CHA UFUNDI ARUSHA

CIVIL-ENGINEER.
DEPARTMENT

Try to answer the following questions and practice sketching where ever necessary and possible.

1) Local Bylaws
   Local Bylaws demand a certain capability of carrying load according to its destination.
   a) Which minimum load a domestic floor is required to carry?
   b) Which minimum load an industrial floor is required to carry?
2) Solid Ground Floors
   Give explanations (if necessary by sketching) on solid ground floors, particularly on
   a) Site Concrete: - thickness of concr. layers
      - mixtures
   b) Hardcore: - material, which can be used
      - thickness of hardcore bed
      - blinding
   c) Waterproof Membran / DPC
3) Suspended Timber Ground Floors
   a) What are the construction members of susp. timber ground floors?
   b) How to protect susp. timber floors against droughts and dry rot?
   c) Draw a sketch of an air brick
   d) Show in a sketch the minimum dimensions required under B.R.C.4.
   e) Draw the layouts of suspended timber floors with
      - joists, parallel to a fireplace
      - joists, at right angles to a fireplace
   f) Discuss advantages and disadvantages of suspended timber ground floors.
4) Upper Floors
   a) What are the main differences between Ground Floors and Upper Floors?
   b) Sketch and explain the structure of an Upper Floor
   c) List different types of Upper Floors
   d) Explain the term (if necessary by sketching):
      - Common Joist
      - Trimming Joist
      - Trimmer
      - Trimmed Joist

e) Give explanations on "The Spacing of Joists":
   - Commonly used distances between joists
   - Maximum economical span
   - Use of "Double Floor Construction".

f) Sketch different "Strutting Arrangements", such as:
   - Herringbone strutting
   - Solid strutting : in line
   - Solid strutting : staggered

g) Explain three different ways of defining the Size of Floor Joists

h) Sketch and explain different methods of End Support of Floor Joists, such as:
   Built into or
   Supported against loadbearing walls

i) List different sorts of Floor Trimming Joints

j) Write notes on "Monolithic Reinforced Concrete Upper Floors" and describe:
   - Thickness
   - Reinforcement
   - Formwork
   - Advantages and Disadvantages

   if necessary by sketching

k) List and explain different types of "Precast Concrete Upper Floors"

l) Describe (if necessary by sketching) "Hollowblock and Waffle Floors"

6) Floor Finishes:

a) Explain the following terms:
   - Jointless Floor Finish
   - Cement/Sand Screed
   - Monolithic Construction
   - Seperate Construction
   - Unbonded Construction
   - Floating Construction
   - Granolithic Floor Finishes
   - Terrazzo

Use sketches!

b) Give mix - designes

c) Explain different types of "Slab Floor Finishes"

d) List different types of "Sheet Floor Finishes"

e) Write notes on different types of "Wood Floor Finishes"

8.0PEN FIREPLACES, CHIMNEYS & FLUES

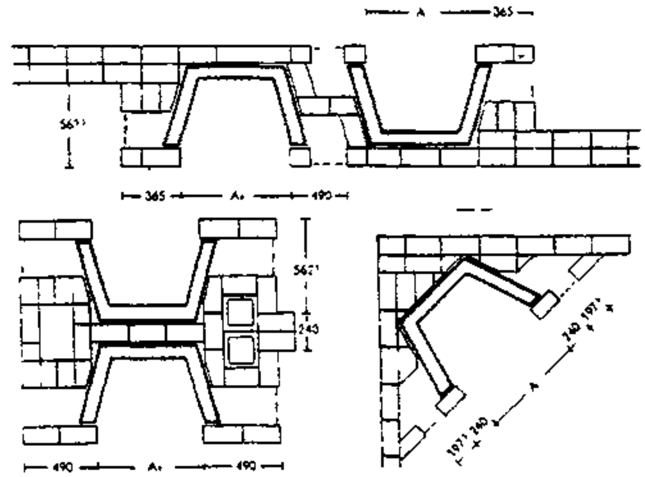

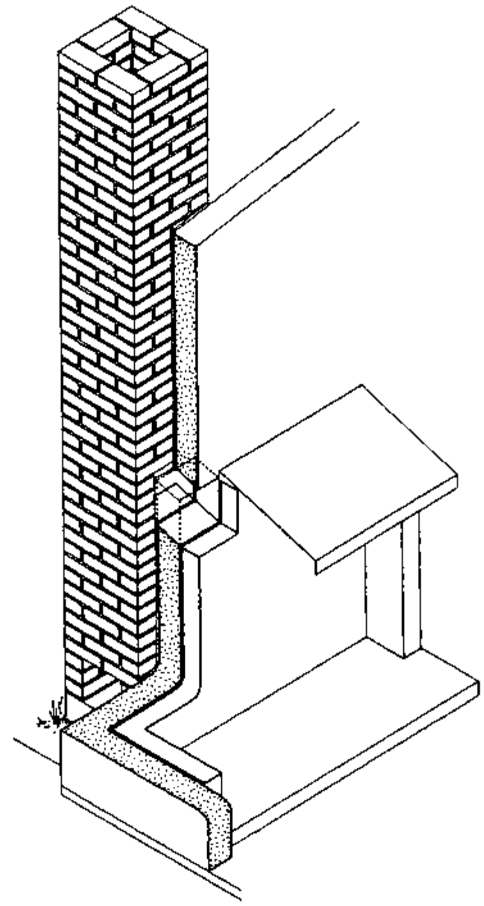

CONTENTS:

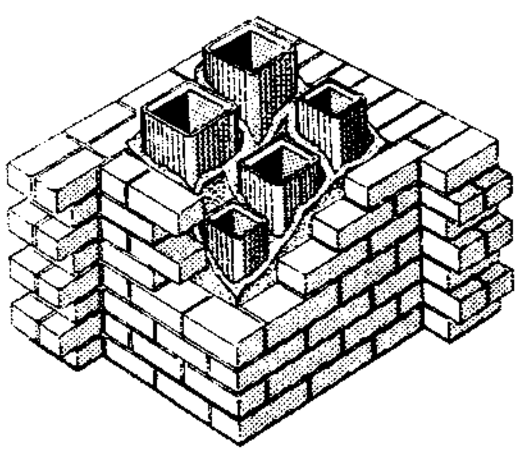

REFERENCES:

1. Jack Stroud Foster
   MITCHELL'S BUILDING CONSTRUCTION
   "Structure and Fabric"
   Part 1

2. E. Neufert
   "Bauentwurfslehre"
   Verlag ULLSTEIN
   Edition 1966

3. Walter Meyer-Bohe
   ELEMENTE DES BAUENS
   "Mauerwerksbau"
   Verlagsanstalt
   Alexander Koch GmbH

8. FIREPLACES, CHIMNEYS & FLUES

8. FIREPLACES, CHIMNEYS and FLUES.
   - In Tanzania the open fire, burning solid fuel, is still widely used in houses as a means of space heating or for heating water for domestic purposes.

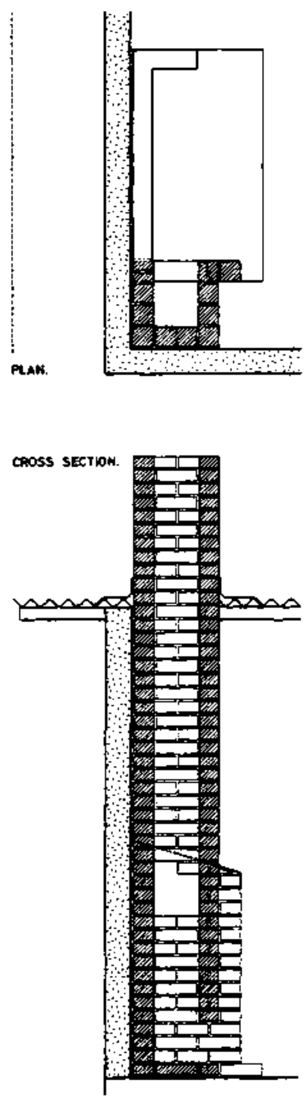

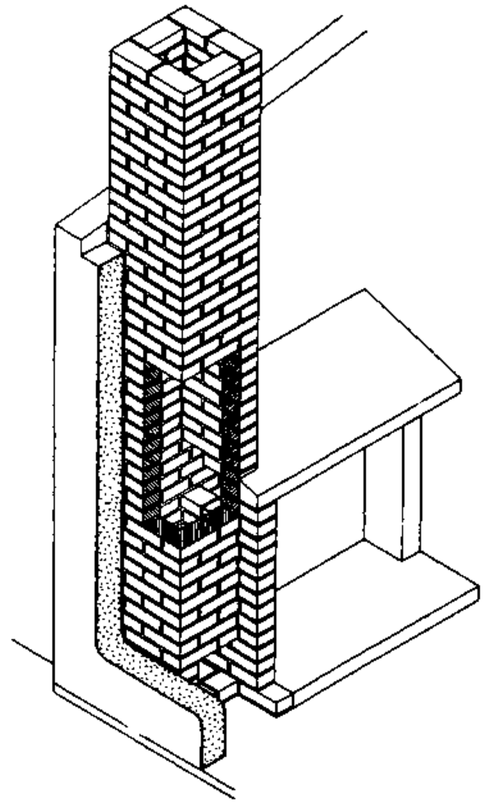

- A FIREPLACE is a space in a wall (or formed in a free-standing position) to accomodate an open fire from which the smoke and gases pass to the open air through a duct or FLUE.

- The structure enclosing a flue (or flues) is called a CHIMNEY.

- Where this rises above the roof it is called a CHIMNEY STACK.

- A projecting part of a wall which a fireplace and flues are constructed is called a CHIMNEY BREAST.

- A tall, freestanding chimney (usually required for large heating plants) is called a CHIMNEY SHAFT.

FUNCTION of FIREPLACES and FLUES

8.1 Function of Fireplaces and Flues

- The function of a fireplace is to burn fuel efficiently and safely, and to transfer the effectively the heat generated into the room.
- An adequate supply of air is necessary for the efficient combustion of any fuel. The domestic fire, burning charcoal or timber, relies for its air supply on an upward air movement which is caused by cooler air flowing through and over the fire bed to replace a volume of heated air rising in a flue.
- This cooler air is made up by 2 components:
  . primary and
  . secondary (see fig.).
  The primary air supply is that air which feeds the fire bed and contains the oxygen nessary for combustion.

  The secondary air supply is that required to cause the column of air heated by the fire to rise up the flue carrying away with it the products of combustion.
- An efficient flue promotes this upward air movement, or 'DRAUGHT', and a suitably designed fireplace establishes a proper balance between the primary and secondary supplies so that efficient combustion may occur.
- Since the secondary air must be supplied to the fire via the room, which it enters through crack, windows doors or controlled vents, a measure of air change or ventilation results.

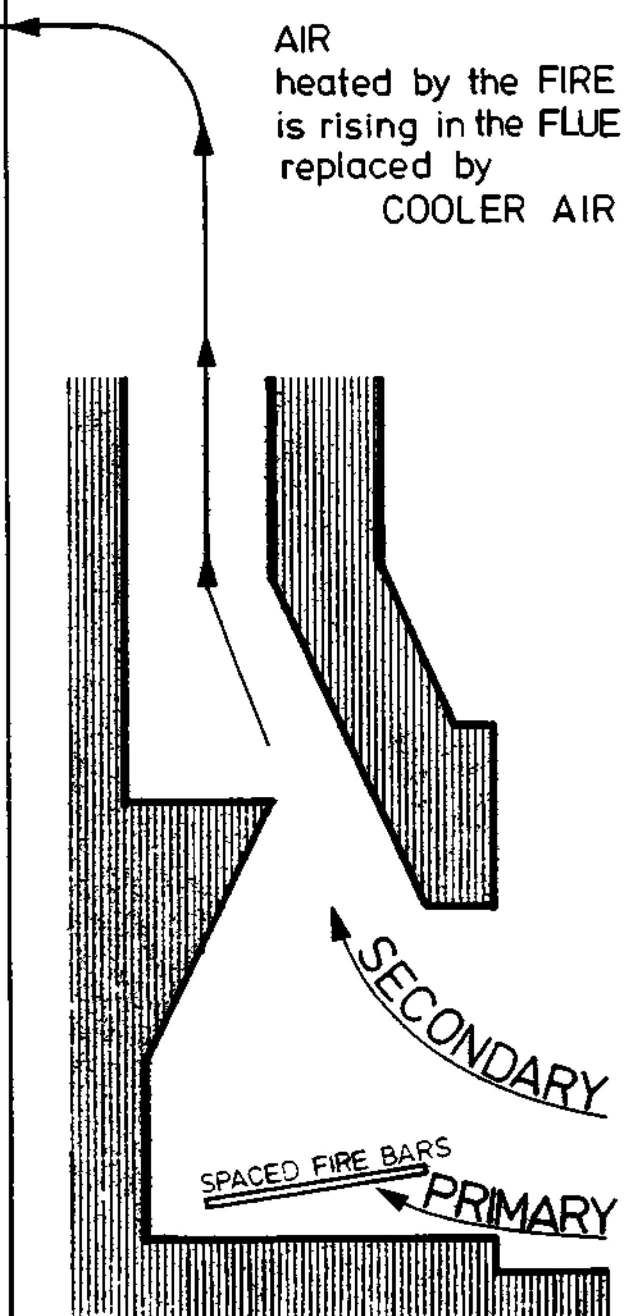

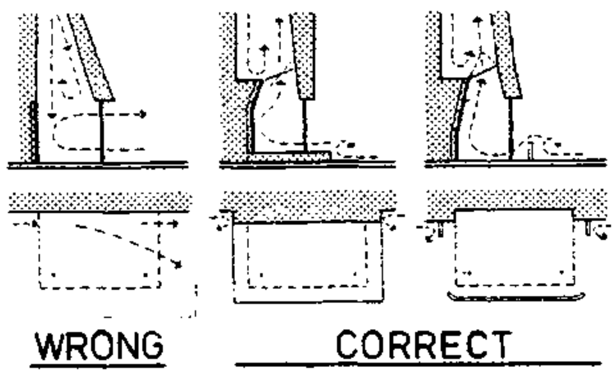

AIRMOVEMENT and AIRSUPPLY along FLOORS and WALLS to be interrupted (SMOKE!)

- THEREFORE:
  The primary function of the flue is to contain the rising warm air and gases above a fire in a manner which will promote a natural upward flow of air (the power of which will depend on the difference in weight between the column of light, warmed air in the flue and a similar column of cool heavier external air.
  The secondary function is to ventilate the room in which the fire is situated.

- In order that fireplaces and flues shall satisfactorily fulfil these functions a chimney and chimney breast (which are also structural parts of the building) must satisfy certain requirements such as:

REQUIREMENTS:

. WEATHER RESISTANCE
The prevention of wind and rain penetration is of particular importance because of the adverse affect on the function of the flue caused by the cooling of the flue gases.
Special care must be taken to prevent damp penetration at the point where a stack passes through a roof and flashings and damp-proof coarses are required at the junctions of the two.

The top part of the stack must also be protected to prevent saturation of the chimney.

WEATHER RESISTANCE

THERMAL INSULATION

. THERMAL INSULATION
Adequate thermal insulation must be provided to the flue by the chimney in order:

1. to avoid the cooling of the flue gases and the cousequent slowing down of the upward air flow or draught;
2. to prevent condensation of flue gases on the walls of the flue which (particularly with slow burning appliances) can cause considerable damage to the chimney.

FIRE RESISTANCE

. FIRE RESISTANCE
The construction of a fireplace and its chimney must be such that combustible materials within and outside the building cannot be ignited by the fire or hot flue gases.

THEREFORE :

Therefore an adequate thickness of noncombustible material around flues and fireplaces must be provided and all combustible materials to be kept away a sufficiant distance from a flue or a fireplace.

- Fireplaces must have a bottom or hearth of noncombustible material and extent on or above which the fire bed will rest.

- The outside surface of a chimney should not become hot enough to iquite timber or other combustible material which may be near it. A temperature of 65°C is considered to be a safe maximum(This is achieved by the use of e.g.100 mm c brickwork or concrete).

- The outlet of a flue should be well above the roof in order to avoid danger from sparks (outside the zones of wind pressure). Building regulations lay down require ments concerning heights of stacks, thickness of materials and proximity of combustible materials to flues and fireplaces.

PRINCIPLES OF FIREPLACE DESIGN

8.2. PRINCIPLES OF FIREPLACE DESIGN.

- The shape of the fireplace must be desingned to allow an adequate but not excessive supply of primary air to the fire bed and secondary air to the flue.

- To contain the fire safely and to transfer the heat generated into the room, the fireplace must be constructed of suitable materials, having high fire resistance but capable of storing and radiating heat.

- The fireplace consists basically of a rectangular recess - or FIREPLACE OPENING - of suitable height with means of supporting the chimney breast above and some means of reducing the width of the opening to that of its flue.
The back and sides of the opening are formed of material capable of radiating heat and the base of the opening must be of fire-resisting material extending beyond the opening at front and sides.
A SURROUND around the opening is often incorporated for aesthetic reasons or to increase the effective depth of the fireplace.

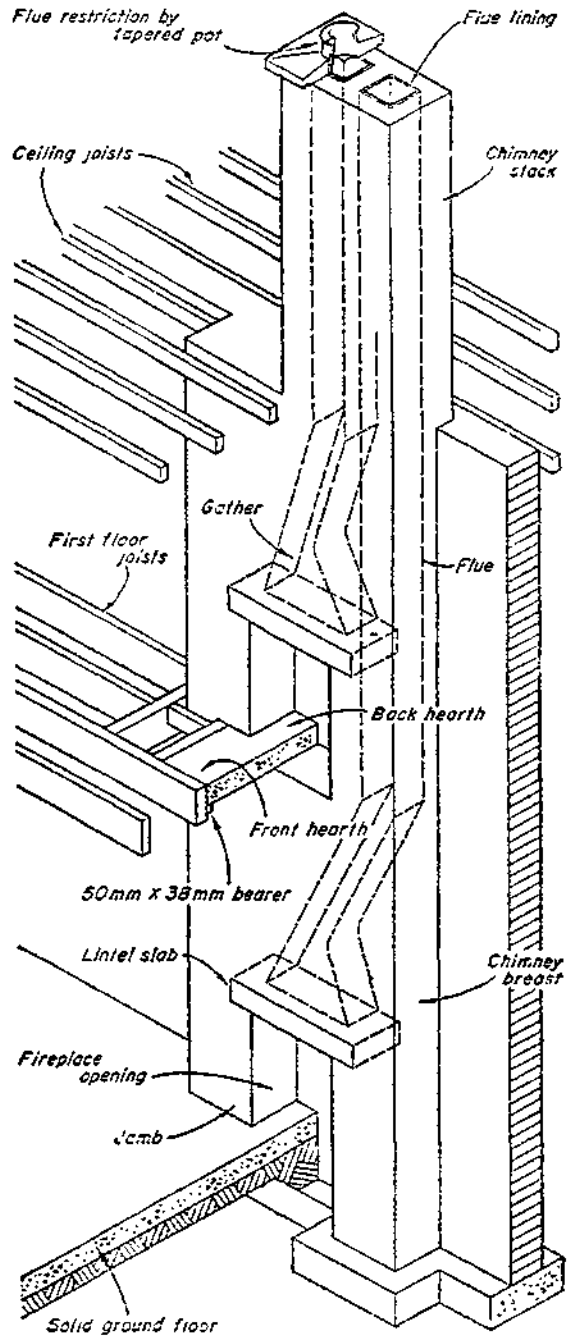

DIMENSIONING TABLE for OPEN FIREPLACES

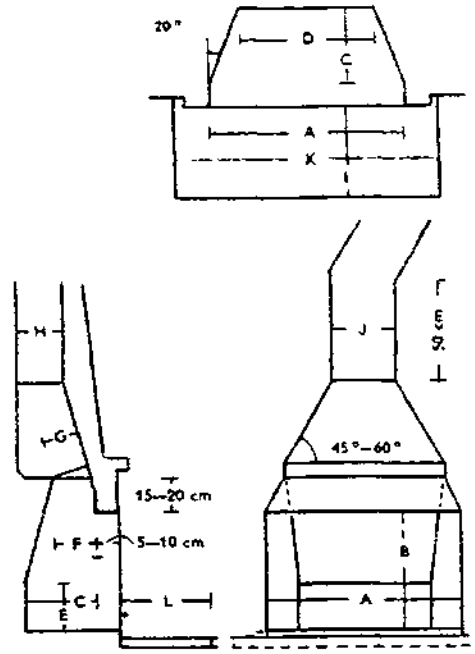

TYPE of ROOM	ROOM SIZE		FIREOPENING			DEPTH	FIREBACK		THROAT		CHIMNEY			SURROUND	
			width	height	area		width	vert. part						width	leng
	m²	m³	cm	cm	cm²	cm	cm	cm	cm	cm	cm	cm	cm²	cm	cm
—	—	—	A	B	—	C	D	E	F	G	H	J	—	K	L
small rooms	16—22	40—60	60 65	50 55	3 000 3 580	34 35	36 40	25 23	20 20	12 12	20 20	20 20	400 400	100 105	50 50
medium rooms	22—30	60—90	70 75 80	58 60 63	4 060 4 500 5 040	36 37 38	44 49 53	25 25 28	20 20 20	12 12 12	20 20 20	20 20 26	400 400 520	110 115 120	50 50 50
larger rooms	30—40	90—120	85 90 95	66 68 71	5 610 6 120 6 750	38 40 40	58 62 66	28 28 30	20 20 20	12 12 12	20 20 26	26 26 26	520 520 676	125 130 135	50 50 50
large rooms	40—50	120—180	100 105 110	74 76 78	7 400 7 980 8 580	42 42 45	70 74 78	30 30 30	20 20 25	12 12 12	26 26 26	26 26 38,5	676 676 1 000	140 145 150	50 50 50
small halls	50—70	180—250	115 120 125	82 84 87	9 430 10 080 10 880	45 48 48	82 85 89	32 32 32	25 25 25	15 15 15	26 26 26	38,5 38,5 38,5	1 000 1 000 1 000	155 160 165	50 50 50
medium halls	70—90	250—350	130 135	90 92	11 700 12 420	51 53	93 97	32 32	25 25	15 15	26 26	38,5 38,5	1 000 1 000	170 175	50 50
large halls	üb. 90	üb. 350	140 145 150	95 97 100	13 300 14 070 15 000	54 55 58	100 105 109	35 35 35	25 25 25	15 15 15	38,5 38,5 38,5	38,5 38,5 38,5	1 480 1 480 1 480	180 185 190	50 50 50

TRADITIONAL OPEN FIREPLACE

8.2.1 TRADITIONAL OPEN FIREPLACE

- Originally fuel was burnt in a simple rectangular recess, but during the course of time scientific principles have been formulated to improve efficiency and reduce smokiness.
  These principles still remain basically sound and involve:
  1.
  The correct design of the junction of fireplace and flue, called the THROAT. This should be 100 mm wide, 200 mm to 250 mm long and 150 mm to 200 mm deep, situated perpendicularly over the fire. The entrance to the throat should be rounded.
  2.
  Splayed sides to the fireplace on plan to obviate eddies of smoke entering the room (This occurs with fireplaces having the back and the front of the opening equal in width.
  3.
  Sufficient depth from the face of the chimney breast to the back of the fireplace to prevent smoking when a draught crosses the opening
  4.
  The fireback sloping foreward to direct radiant heat into the room and raise the temperature of the fire, thus assisting combustion.
  5.
  A smokeshelf level with the top of the throat although research has slown that this can be eleminated if all other features are properly designed and incorporated.

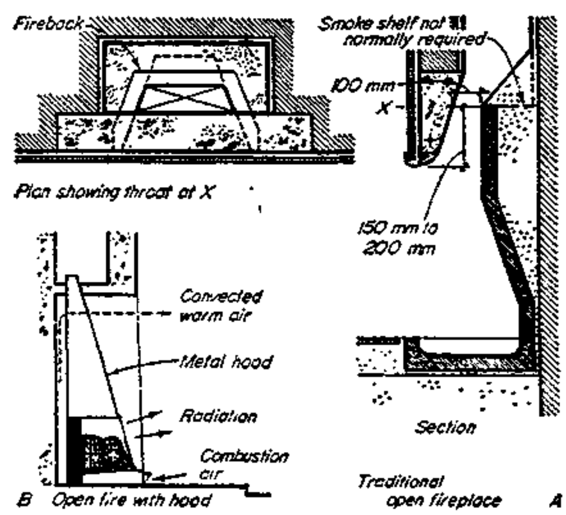

Traditional open fireplace

8. FIRE PLACES	FIREPLACE DESIGN	BUILDING CONSTR.
compiled: D. VOLKE		LECTURE
FEB 82		CET 4031 / 18.2 o7

TCA TECHNICAL COLLEGE ARUSHA
CHUO CHA UFUNDI ARUSHA
CIVIL ENGINEER. DEPARTMENT

The free arrangement of a fireplace in a room causes often several openings on 1, 2, or 3 sites of the OPEN FIREPLACE.

Dimensions of such fireplaces differ from comon ones with only one opening.

FOR DIMENSIONING REFER TO THE TABLE BELOW

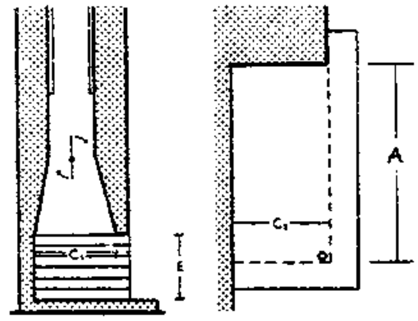

1

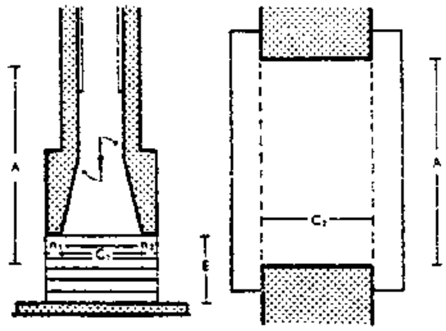

2

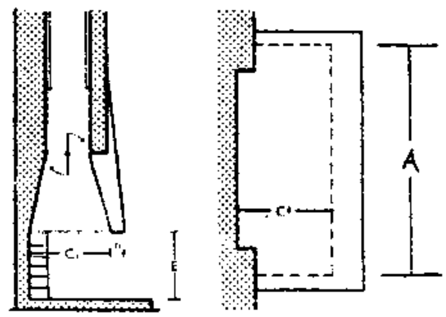

3

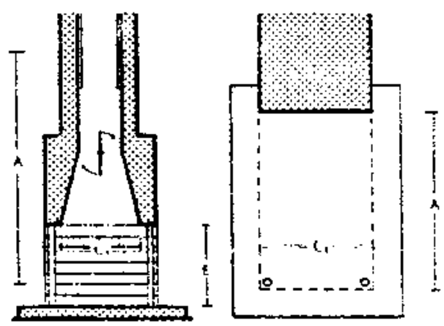

4

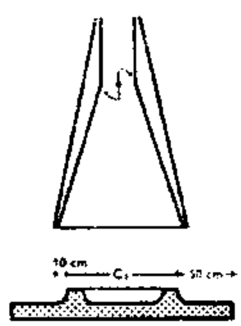

5

- Such fireplaces, however, remain uncontrolled and tend to consume large amount of fuel whilst promoting too large an air change. Control of the secondary air supply can be effected by a hood placed above the fire bed, in which case some heat transfer occurs by way of air circulating round the hot metal forming the hood, or preferably by an adjustable metal throat restrictor.
- When a stool grate to hold the fuel is used some control of the primary air supply to the fire can be effected by selecting a design with a solid front incorporating a variable inlet opening.

DIMESIONING —— TABLE

	C_1	C_2	Schornsteinquerschnitt
1	2/3 E—10 cm	C_1+n	1/12 E (A+C_2)
2	5/6 E—20 cm	$C_1+n_1+n_2$	1/12 E 2A
3	2/2 E—10 cm	C_1+n	1/12 E (A+2C_1)
4	5/6 E—20 cm	C_1+2n	1/12 E (2A+C_2)
5	Ø min 81 5cm	C_1+2n	1/12 E 3 14 (C +20 cm)

IMPROVED SOLID FUEL APPLIANCES ●

8.22 IMPROVED SOLID FUEL APPLIANCES

- Normal open fires will burn a wide range of fuels including wood, charcoal, coal and peat but they are unsuitable for burning smokeless fuels such as coke and anthracite and they will not burn throughout the night.

- The improved appliances incorporate suitably spaced fire bars and provide increased vertical depth in the fire bed which permits smokeless fuels to be burnt.

- Often BACKBOILERS are incorporated which provide hot water for domestic use or may heat a limited number of radiators situated near the fire. A removable front anables an extra deep firebed to be laid for overnight burning.

- Some improved open fires incorporate a heat exchanger which provides heat by convection in addition to the radiant heat of the fire. They operate by passing air through a convection chamber round a metal fire container and returning the warmed air to the room in which the appliance is situated. These are called CONVECTOR FIRES and may be fitted with back boilers.

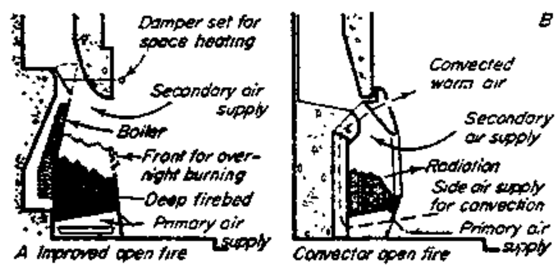

Improved solid fuel appliances

8.3. PRINCIPLES OF FLUE DESIGN

To ensure the proper function of a flue the following factors must be considered in its design:

PRINCIPLES OF FLUE DESIGN

1. SIZE and SHAPE

- Flues to domestic fires should be not less than 3,65m high measured vertically from the outlet of the appliance or fireplace to the top of the flue terminal in order to ensure an adequate difference in weight between the internal flue gases and the external air.
- The entry to the flue should be restricted to increase the inicial velocity of the gases and a further restriction at the flue terminal is desirable to increase the velocity at the outlet (This reduces the danger of down droughts.
- The cross-sectional area of a flue should be not less than 175 mm diameter. The normal 225 x 225 mm brick flue measures about 190 x 190 mm when lined. (For minimum sizes for various appliances refer to table).
- Where rectangular flues are used the longest side should not be more than one- and half times the shorter.
- Flues should be as straight as possible, any bends being near the top rather than just above the fireplace. Unavoidable bends should be at an angle of not less than 45 degrees and preferably not less than 60 degrees to the horizontal.

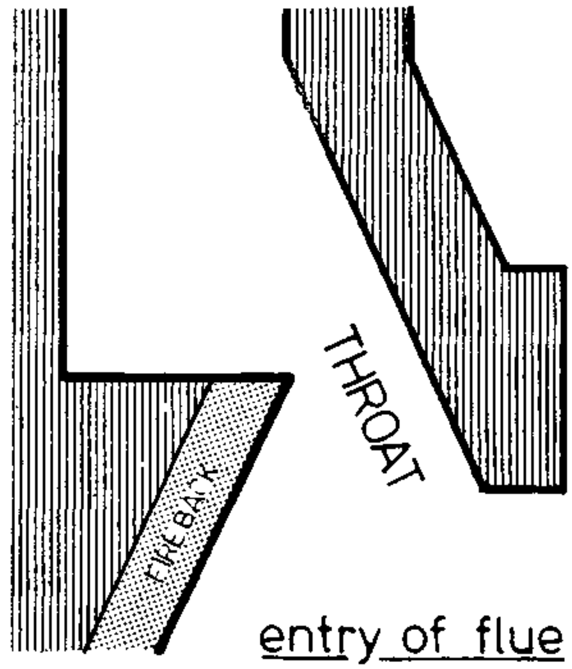

entry of flue

Appliance	114 mm internal diameter	150 mm internal diameter	225 mm × 225 mm or 175 mm to 200 mm internal diameter
Open and closeable fires, openable heaters, cookers	Heat storage cookers only, burning smokeless fuel	Smokeless fuels (up to 7325 W)	Bituminous fuels (minimum height of flue — 3 65 m)
Domestic boilers	Smokeless fuels (up to 7325 W). Maximum height 9·15m. Sweeping access every 3·0 m	Smokeless fuels (7325–14650 W). Sweeping access every 3·0 m	Bituminous fuels (all outputs). Smokeless fuels (14650–29300 W) — 200 mm diam. minimum

Notes
A closed heater should be provided with a flue of the same size as that of a boiler with the same rate of combustion.
Flues with bends making cleaning difficult should have a minimum diameter of 150 mm.
Smokeless fuels—include coke, anthracite, dry steam coal, coalite, etc.

Minimum flue sizes for solid fuel burning appliances

AIRTIGHTNESS

2. AIRTIGHTNESS

A flue must be airtight in order to maintain the strength of the draught at the fireplace and to prevent the escape of smoke. Air can enter through faulty jointing or faulty withes (controlled entry of air into the flue may however, be an advantage in certain circumstances).

INSULATION

3. INSULATION

- Care must be taken to prevent the flue gases cooling, which might result in down draught and condensation. This precaution is particularly important where slow burning appliances are used.
- Flues should be constructed with 1/2 brick walls and liners. The use of brick thick walls in place of 1/2-brick thickness does not afford much increase in isulation value and has the disadvantage of offering more surface area to the atmosphere, with consequent cooling of the flue. It also has a high thermal capacity which requires a longer pre heating period before the flue is warm enough to encourage 'drought' action. The greater thickness may, however, be used for any external walls of flues to minimise damp penetration.
- Flues situated internally only need special consideration where they penetrate the roof and become exposed to the weather.

  Thickening of 1/2-brick flue walls to 1-brick thickness can be effected by corbelling out within the roof space, and perticular attention should be paid to the arrangement of the d.p.c. and flashings to the stack.

TCA TECHNICAL COLLEGE ARUSHA CHUO CHA UFUNDI ARUSHA — CIVIL ENGINEER. DEPARTMENT

POSITION OF OUTLET

- A suitable capping should be provided to prevent saturation of the chimney.
  A projecting capping, in addition to throwing water clear of the chimney walls, helps to create a zone of low pressure at the flue outlet.

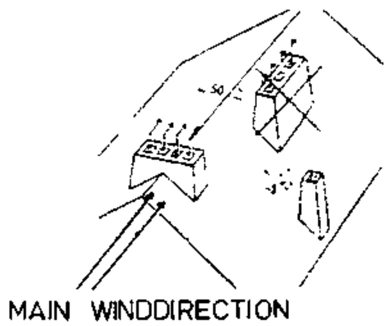

POSITION TO WINDDIRECTION AND RIDGE

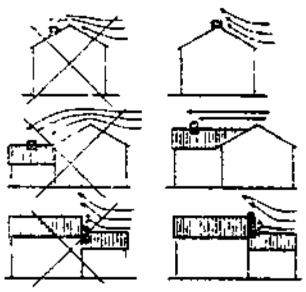

EFFECT OF WIND TO THE DRAUGHT

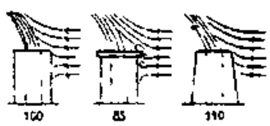

FIGURES COMPARING THE EFFECTIVITY

INFLUENCE OF CHIMNEYHEAD AND AREA ON THE DRAUGHT

4. POSITION OF OUTLET
- For safety in terms of fire the outlet must be at least 1 m above the highest point of intersection of the chimney or flue pipe with the roof.
- The same distance above any adjacent opening light or ventilation opening which is not more than 2,50 m from the outlet, measured horizontally.
- When the chimney passes through the ridge of a pitched roof, or within 0,60 m of it, the outlet may be not less than o,60 m above the ridge.

These dimensions are exclusive of any chimney pot or other terminal.
- If the roof covering is of combustible material the outlet should be at least 1 m above the level of the ridge whatever the position of the stack.

These precautions do not, however, necessarily ensure the efficient functioning of a flue, the outlet of which must be positioned outside any potential zones of high wind pressure.
The positioning of a flue outlet in a potential suction zone will assist in the removal of the smoke and gases, but should occur in a high-pressure zone there is every likelihood of the gases being taken down the flue by air moving from this zone to an area of lower pressure within the room.

CONSTRUCTION OF FIREPLACES

8.4 CONSTRUCTION OF FIREPLACES

- The normal depth of the opening is 328 mm and the width 578 mm. This will take standard 406 mm and 457 mm wide fires. The height should be 585 mm to 600 mm from the finished hearth level to accommodate a standard 565 mm high fireback. If a projecting surround is to be incorporated this height should be increased to permit the proper formation of a throat.

Minimum thicknesses of material at sides and back of the opening are laid down in building regulations and are indicated in the figure. The jambs are required to be 200 mm thick. The back of the opening may be 100 mm thick when

1. It is set in an external wall and no combustible external cladding is attached behind it (A) or
2. it is common to two fireplaces set back-to back in a wall other than a party or separating wall (B)

In all other cases the back must be 200 mm of solid walling (C) or cavity walling with each leaf not less than 100 mm thick (D). (E) and (F) show alternative ways of setting the chimney breast in the wall of which it forms part.

Where a wide chimney breast is required for sake of appearance the jambs are made wider than 200 mm and where the jamb carries a flue as on an upper floor, a minimum width of 440mm is necessary.

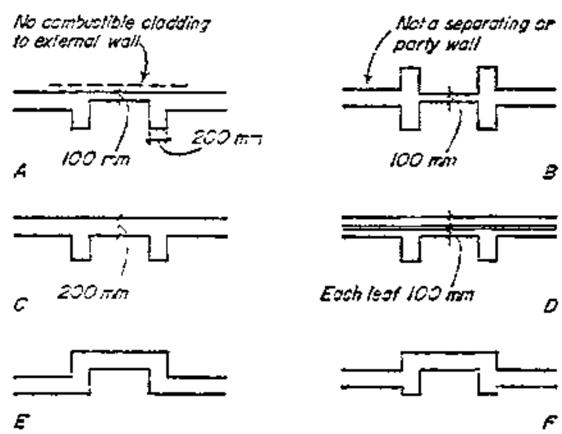

Thickness of material round fireplace openings

The traditional method of forming the head of the opening was by a segmental rough brick arch but the arch form presents some difficulty in forming a smooth narrow throat and a reinforced concrete lintel is preferable and is now normally used. Alternatively, a precast concrete lintel block or slab may be used in which the throat aperture is formed.

The junction between the relatively wide fireplace opening and the narrow flue is made by corbelling or 'gathering over' the brickwork or stone work of the chimney breast. The funnelshape produced is called the gather and provides a smooth flow from throat to flue.

The base of the fireplace opening is called the hearth.
It is constructed of concrete and building regulations require a minimum thickness of 125 mm. The back hearth, within the recess, bears on the chimney breast. The front hearth must projekt at least 500 mm in front of the breast and 150mm beyond each side of the opening. The full 125 mm thickness of the front hearth must be taken into the recess.
In solid ground floors the floor slab itself forms the hearth of the fireplace. Timber ground floor construction requires the provision of a fender wall. This wall may be 102-5 mm thick, providing support to the floor joists, the space within being filled with hardcore which carries the concrete hearth or it may be 215 mm thick to provide also a bearing for the front and side edges of a reinforced concrete hearth, the back edge of which is supported on the breast.

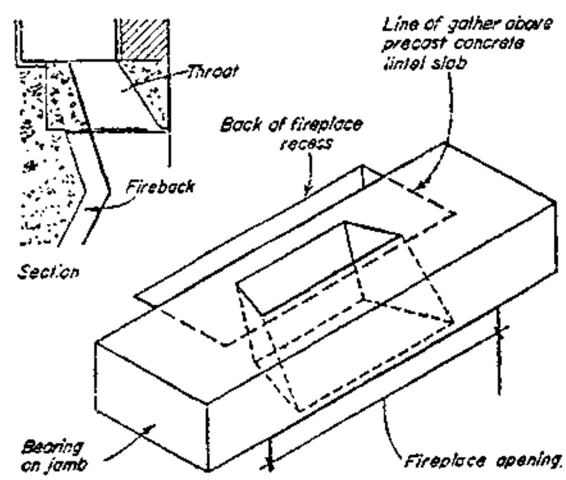

Precast concrete lintel slab

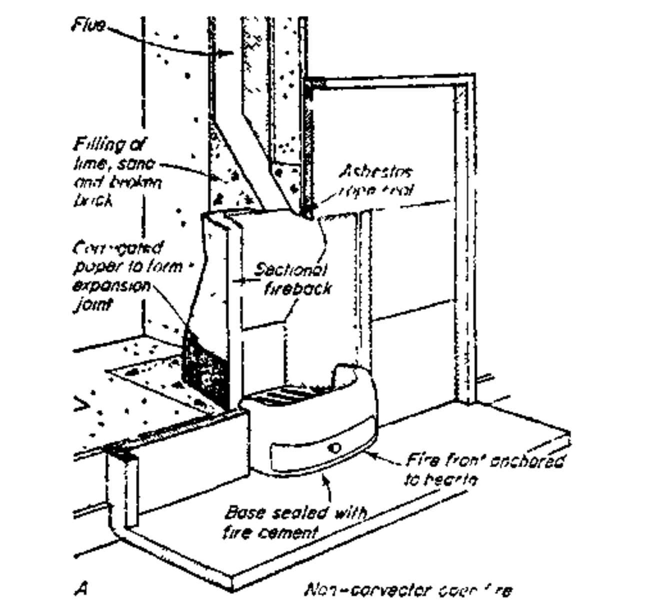

8.41 NON-CONVECTOR OPEN FIRES

MODERN inset open fires or all-night burners comprise a grate with a front which is sealed into the fireplace opening and invorporates in its design some device for controlling the primary air supply such as a spin wheel or controllable flap. These grates are designed to fit British Standard fire backs which are made of firebrick or refractory concrete (aluminous cement and broken firebrick). The bend or knee at the back should be fairly high to permit the formation of a satisfactory throat (figure).

8.42 CONVECTOR OPEN FIRES

These are freestanding open fires in which the fire is contained in a metal enclosure surrounded by a second metal jacket to form an integral convection chamber. The flue penetrates the outer jacket. The junction of the front of the fire with the fireplace surround must be sealed with soft asbestos rope or string and the appliance must be screwed to the back hearth so that no movement takes place which might break the seal.

Back boilers

Non-Convector open fires with back boilers are cast iron units incorporating a water container, flue and damper which are installed in place of the normal fire back as shown in the figure. The same general methods of constructing the fireplace already described are used, but the height and depth of fireplace opening may need to be greater than for a normal open fire. Convector fires are also available with back boilers, the boiler being built into the appliances by the manufacturers. Flow and return pipes where they pass through the chimney breast, the gap between being caulked with asbestos string.

NON CONVECTOR OPEN FIRES

CONVECTOR OPEN FIRES

BACK BOILERS

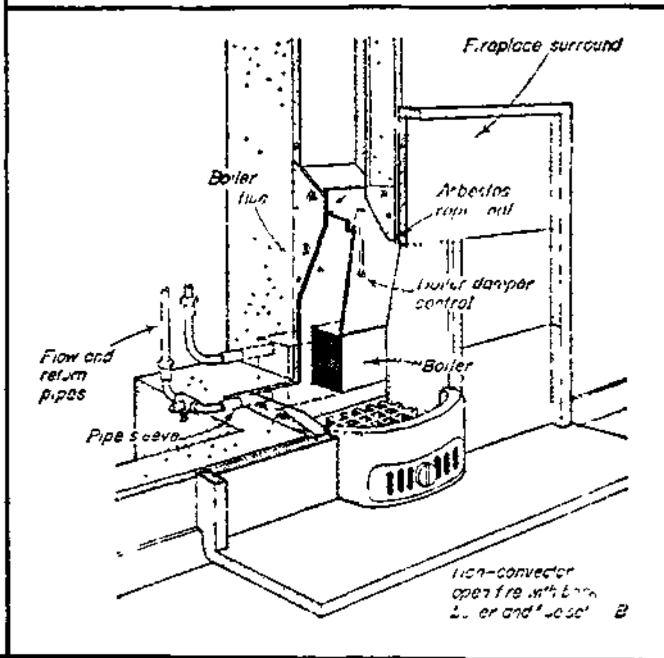

CLEANING

Chimney and flue cleaning

Most open fires are swept through the front. Where adjustable throat restrictors are installed, these are normally removable to allow cleaning brushes to be passed through the remaining opening.

CONSTRUCTION

OF CHIMNEYS

8.5 CONSTRUCTION OF CHIMNEYS

Brick chimneys

Domestic flues are mostly constructed in brickwork, with walls not less than 102-5 mm thick. Bends and slopes in the flue are formed by corbeling

The back of a flue in a party or separating wall, unless back to back with another flue, must be at least 200 mm thick, or be of cavity construction with each leaf not less than 100 mm thick, up to its intersection with the roof.

The chimney breast, immediately above the top ceiling is reduced in width to that required for the stack, allowing for at least 102-5 mm walls and withes, that is the walls between adjacent flues.

For safety in terms of stability the height of a stack, including any chimney pot or other terminal, above the highest point of intersection with the roof must not exceed six times the least horizontal dimension unless the stack is braced in some way or its stability under wind pressure is checked by calculation.

When a chimney breast or stack projects beyond the face of the wall below the total projection of the oversailing brickwork must not exceed the thickness of the wall below with a maximum projection of 50 mm in each course.

BRICK CHIMNEYS

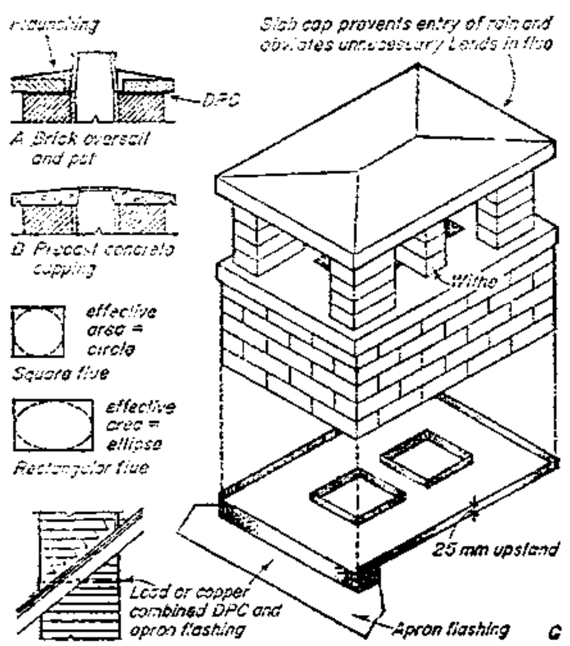

Flues and chimney stacks

The top of a flue is usually terminated by a cylindrical fireclay pot. Tapering pots provide the slight restriction at the flue outlet to increase the velocity of the rising flue gases. The pot is bedded in one or two courses of brickwork, or other type of capping, and the top of the stack round the pot is flaunched, that is weathered with mortar, to throw off water.

The use of a perforated and weathered stone or precast concrete cap (B) as a terminal has the advantage of dispensing with the need for flaunching which after a time, even with a cement-lime mortar, may crack and permit the penetration of rain.

Any withes should be carried up to the underside of the top slab.
The top twelve courses of a stack should be laid in cement or cement-lime mortar of a strength not less than 1:1:6.
In order to ensure a smooth surface to the flue and to seal possible cracks in the brick joints the flue is parged or lined. Parging is the internal rendering of the flue with a weak cement-lime mortar,1:3:12, mix, not less than 13 mm thick, applied as the stack is built up. Flue liners, as well as ensuring a smooth airtight flue of uniform section, permit added insulation to be provided.
The Building Regulations, 1976, require flues for solid fuel and oil-burning appliances to be lined with rebated or socketed liners and make no provision for parging.
Liners may be made of fireclay, terra-cotta or acid - resisting concrete or they may be in the form of cast iron or vinyl-coated asbestos cement pipes (untreated asbestos cement is liable to disintegrate if heavy condensation accurs)(A,B)

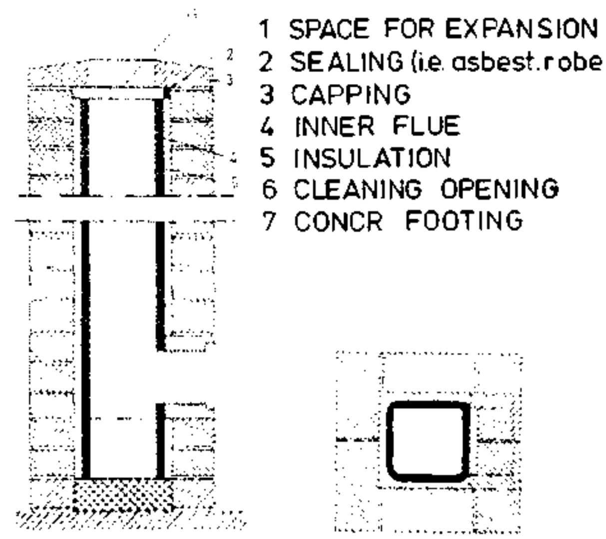

CHIMNEY with PRECAST INNER FORM FLUE

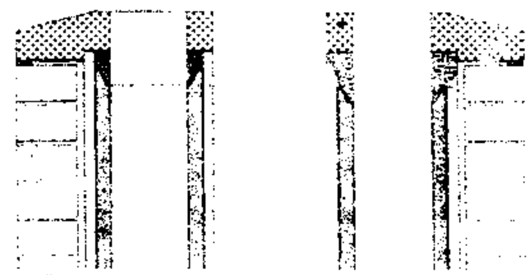

'PLEWA' 'BORA'

CHIMNEYHEAD with INNER FORM DUCT

PRECAST CHIMNEYSTACK

Where pipes are used the sockets should be uppermost and the joints made with asbestos rope and high alumina cement as shown in the figure.
The rope allows expansion and the cement is acid resistant.
The space between the lining and the chimney is usually filled with loose rubble flushed up with concrete or with an insulating material such as light weight concrete (C). Alternatively, the space may be left unfilled but sealed at top and bottom to provide an insulating barrier of still air.
The gathering over of the flue above the fireplace opening, referred to under Fireplace construction, should be steep, not flat, with the entry to the flue itself, that is the top of the 'funnel' more ore less central with the fireplace unless the flue has to pass to one side in order to clear an upper fireplace. A 'dog-leg' bend once always formed in the gather is no longer considered essential.

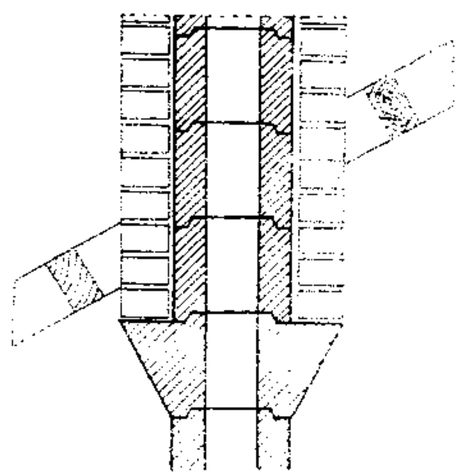

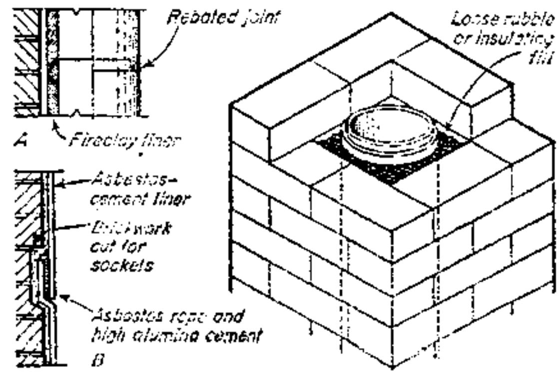

Flue linings

STONE CHIMNEYS

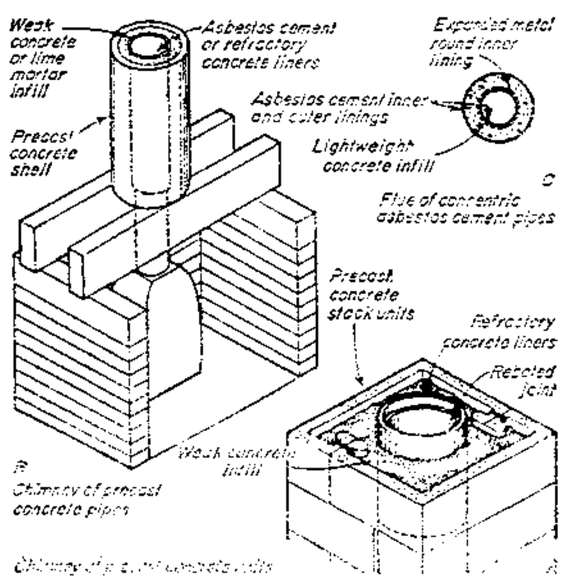

Chimney construction

Stone chimneys

The temperatures encountered in a domestic flue are not likely to damage a good building stone, except in the immediate vicinity of the fire and in this position sandstone should be used or protection given by firebricks. The flue walls should be at least 215mm thick and if the stone is bakked with brick or concrete this should be maintained as the minimum overall thickness.
Coursed masonry may be corbelled out to a total projection not exceeding the thickness of the wall below. Each course may project a distance equal to half the thickness of the wall below it, provided the corbel stone is bonded into the wall a distance equal to twice its projection. Stone chimneys must be protected by liners.

Concrete chimneys

Concrete chimneys can be constructed in three ways:

1 With in situ concrete
2 With precast concrete units
3 By a combination of 1 + 2

Concrete for in situ work may be either plain or reinforced and where in contact with the flue gases should be of an acid-resisting refractory type. Lightweight concrete made with foamed slag or expanded clay aggregates, or no fines concrete, can also be used, provided protection is given by flue liners. The mix for dense concrete should not be too rich in order to reduce shrinkage and to resist the effects of heat satisfactorily crushed brick, slag, clinker or crushed limestone should be used as aggregate.

The concrete should be at least 100 mm thick and unless increased to at least 150 mm where penetrating the roof should be rendered to provide adequate protection against damp penetration.

Up to a height of seven times its least horizontal dimension the effect of wind pressure on a plain, dense concrete chimney need not be considered. Oversailing projections should form an angle of not less than 60 degrees with the horizontal unless the projection is reinforced. The height of in situ lightweight or no-fines concrete chimneys should be limited to four times their least horizontal dimension and all oversailing or projecting parts should be formed with dense concrete, reinforced as necessary. The open-textured internal surface of such chimneys should always be lined and the external surfaces should be rendered. With cast in situ chimneys of all types liners are invariably used as they form permanent shuttering.

Dampproof courses are not generally required if the outside is rendered and there are flue liners.
A veriety of precast units of dense or lightweight concrete are available for forming chimneys. There are two approaches to the construction of chimneys in this form:
One by precast blocks bonded to form the walls and the withes of the chimney as normal masonry,
another by forming the internal and external surfaces of the chimney with precast units and filling the intervening cavity with lightweight concrete.

Dense vibrated concrete blocks will generally withstand damp penetration without rendering the external surfaces, and such constructions automatically provide a sufficiently smooth surface to the flue.

As with in situ cas flues of lightweight concrete flue liners are exxential with lightweight blocks, and these are incorporated in the manufacture.

METAL and ASBESTOS CEMENT FLUEs

Metal and asbestos cement flues

These materials have poor thermal insulation value and are not really suitable for external use unless insulated. They should generally be used only for flues within the room containing the appliance. Metal flues can be made of steel or cast iron. Asbestos cement flues are of heavy quality pipes. The pipes should be frequently supported, usually at every joint or at intervals not exceeding sixteen times the internal diameter.

The joints should be airtight and allowance should be made for the expansion and contraction of the pipes at the joints and at the supports.

Asbestos cement flues are not recommended for open fires or appliances using bituminous coal nor in situations where the internal flue temperature is likely to exceed 260°C since the material cracks when exposed to high temperatures or to flames impinging on its sureface. They must, therefore, be protected form flames by using a 1.8 m length of metal flue immediately above the fire.

Greater strength and insulation can be achieved by using asbestos cement pipes concentrically and filling the intervening cavity with lightweight insulating filling.

All combustible material in a roof or external wall through which the pipe passes must

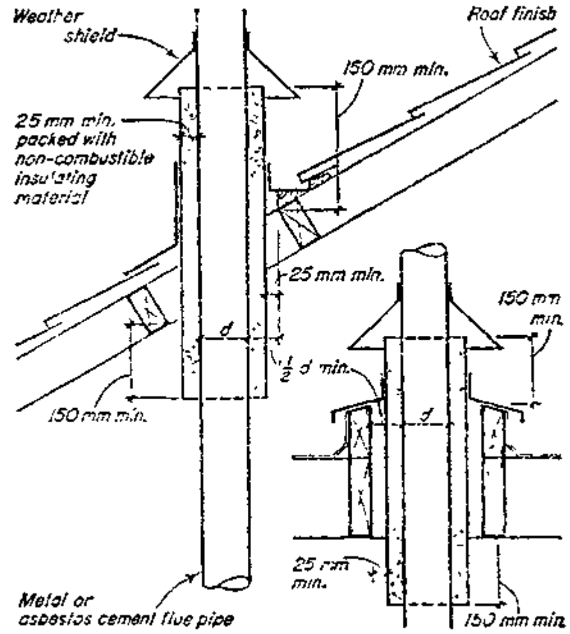

Metal and asbestos cement flues

1. be kept a minimum distance of three times its external diameter away from the pipe,

or

2. be separated from the pipe by 200 mm of solid non-combustible material (300 mm if the combustible material is in an external wall above the pipe) or

3. the pipe must be enclosed with a sleeve of metal or asbestos cement. Such pipes must pass into a normal chimney within the same room or directly through an external wall or a roof structure, but not through a roof space, floor or internal wall.

•REPETITION••exercises•REPETITION•••

Try to answer the following questions and practice sketching wherever necessary and possible:

1. Define briefly the term "FIREPLACE"
2. Name the structural members of a CHIMNEY
3. Describe briefly the function of Fireplaces and flues
4. Explain by means of sketches the PRIMARY and the SECONDARY AIR SUPPLY in a Fireplace and describe the differences.
5. A chimney and chimney breast must satisfy certain requirements, such as:
   - Weather Resistence
   - Thermal Installation and
   - Fire Resistance

   Write notes on the above listed requirements.
6. Describe the principles of a traditional OPEN FIREPLACE and use sketches for illustration.
7. What are the characteristics of IMPROVED SOLID FUEL APPLIANCES? (use sketches for illustration)
8. Designing a flue properly the following factors must be considered.
   a Size and Shape
   b Airtightness
   c Insulation
   d Position of outlet

   Write notes on the above listed factors.
9. Draw a sketch, indicating depth, width and height of the opening of an open fireplace as well as the thickness of material at sides and back of the opening.
10. What is the traditional method of forming the head of the opening of a fire place?
11. What is an alternative to the traditional method?
12. Describe briefly (by using sketches for illustration)
    a How the junction between the fire place - opening and the flue is made (or HEARTH)
    b How the base (or HEARTH) of the fireplace opening is ctructed?

REPITITION ••exercises• REPITITION

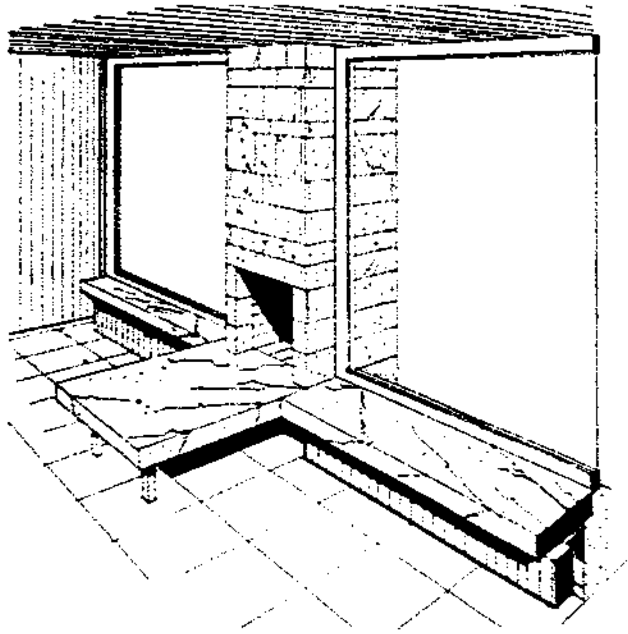

13. Explain briefly the terms:
    - Non-convector fires
    - Convector fires
    - Back boilers

    and use sketches for illustration
14. List different types of chimneys (according to their building materials used for construction) and describe briefly (by means of heat sketches) the methods used for construction.

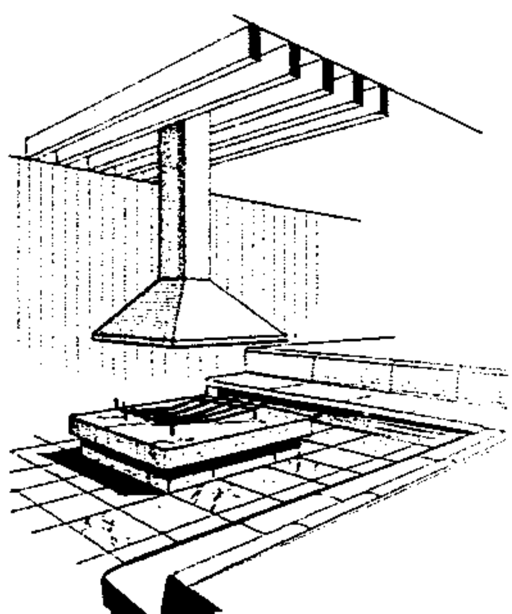

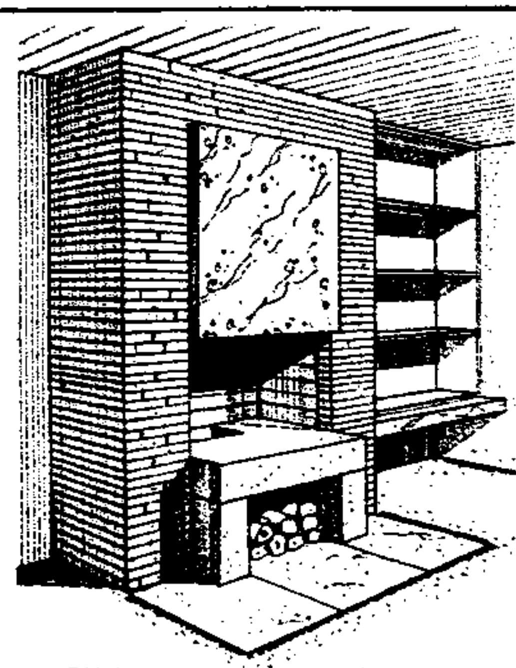

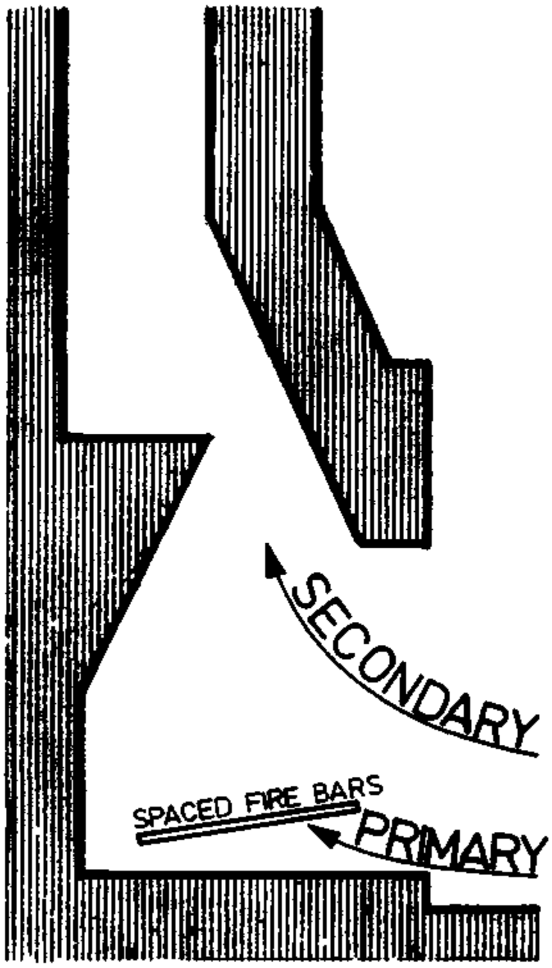
SECONDARY
SPACED FIRE BARS
PRIMARY

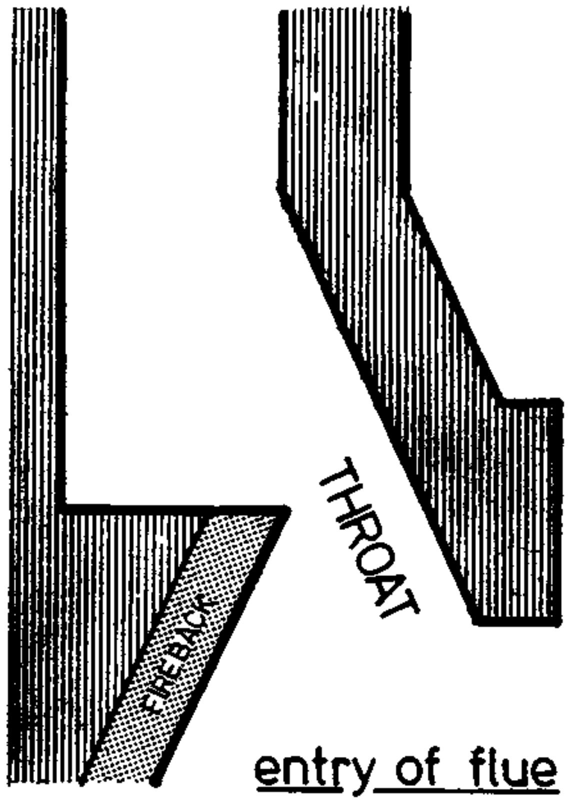
THROAT
FIREBACK
entry of flue

9. ROOFS

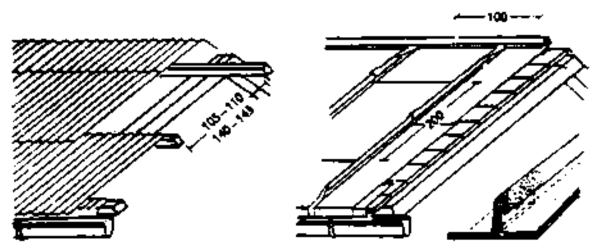

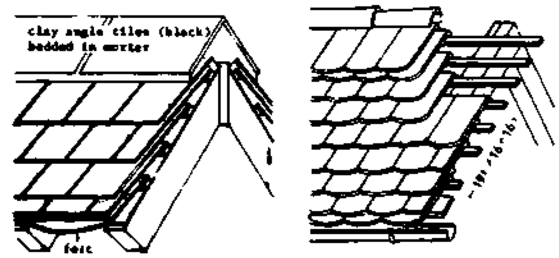

CONTENTS:

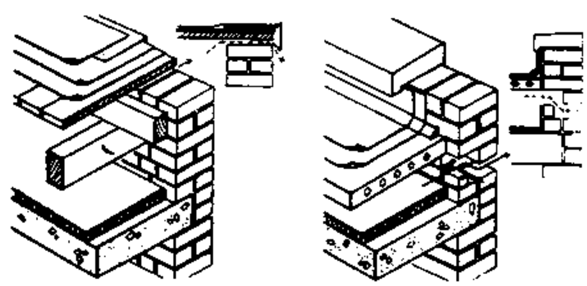

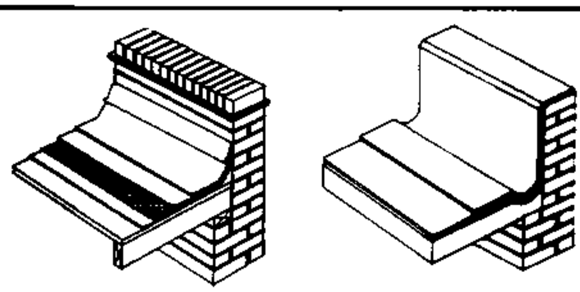

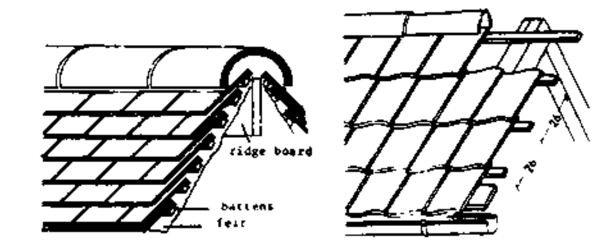

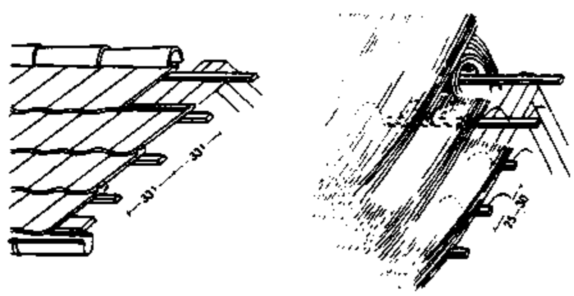

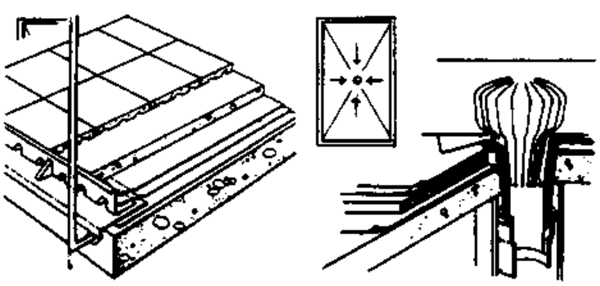

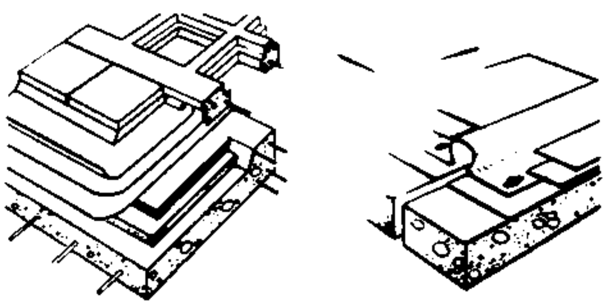

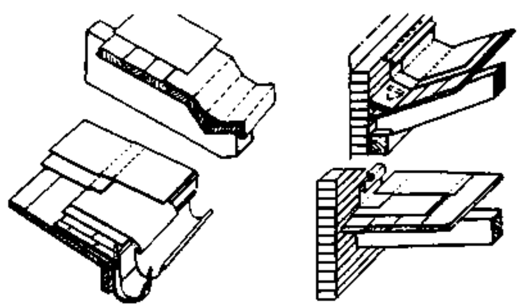

REFERENCES:

1. Jack Stroud Foster
   MITCHELL'S BUILDING
   CONSTRUCTION
   "Structure and Fabric"
   Part 1, Part 2

2. R. Chudley
   "CONSTRUCTION TECHNOLO-
   GY"
   Volume 1,2,4

3. R. Barry
   "The Construction of
   Buildings"
   Volume I and III

4. W. B. Mc. Kay
   "Building Construction"
   Metric Vo. 1,2

5. E. Neufert
   "Architect's Data"
   Edition 1978

6. R.L. Fullerton
   "Building Construction
   in warm Climates"
   Volume 1,3

7. Dahmlos/Witte
   "Bauzeichnen"
   Schroedel Verlag

9. ROOFS

FUNCTIONAL REQUIREMENTS

9. R O O F S

9.1 Functional Requirements

- The main function of a ROOF is to enclose space and to protect the space it coveres from the elements:
  RAIN
  WIND
  HEAT
- To fulfil its functions efficiently the roof normally must satisfy the same requirements as the walls:
  STRENGTH and STABILITY
  WEATHER RESISTANCE
  THERMAL INSULATION
  FIRE RESISTANCE
  SOUND INSULATION

STRENGTH and STABILITY

9.1.1 STRENGTH AND STABILITY are provided by the roof structure and a major consideration in the design and choice of the structure is that of a SPAN.
The wide variety of roof types in different materials which have been developed is - in main - the result of the search for the most economic means of <u>carrying the roof structure and its load over spans of varying degrees</u>.

DEAD WEIGHT

In all types of structures it is necessary to keep the DEAD WEIGHT to a minimum, so that the imposed loads can be carried with the greatest econom y of materials.

The degree of efficiency - in this respect - is indicated by the DEAD/LIVE LOAD RATIO, expressed in the terms of
<u>Loads per square metre of area covered</u>
or
<u>per metre run of roof structure</u>

DEAD / LIVE LOAD RATIO

The structural problem in the design of WIDE SPAN ROOF STRUCTURES is - therefore - primarily that of achieving a DEAD/ LIVE LOAD RATIO as low as possible.

In solving this problem, two factors are important:
1) The characteristics of the materials to be used,
2) The form or shape of the roof

CHARACTERISTICS of MATERIALS

- STRONG
- STIFF
- LIGHT

- if materials are <u>STRONG</u> less material is required to resist given forces.
- if materials are <u>STIFF</u>, they will deform little under load and the structure may be of minimum depth
- if materials are <u>LIGHT</u>, the self - weight of the structure will be small.

ALL OF THESE CONTRIBUTE TO A STRUCTURE OF SMALL DEAD WEIG

EFFECTS of WIND

In addition to the dead load and the superimposed loads, the roof must resist the EFFECTS OF WIND.

The pressure of wind varies with
- its velocity
- the height of the building, and
- the locality of the building.

Wind may exert COMPRESSION on some parts of the roof and SUCTION on others, both in varying degrees at different points according to the pitch of the roof.

Higher suctions and compressions occure
- at the edges of the roof
- on flat roofs and
- on low pitched roofs the suction over the windward side can be considerable.

LIGHT ROOF COVERINGS: (alu-, g.c.i.-, asbestos sheets)
The supporting structure tends to be light and the weight of the cladding and roof structure as a whole may not be heavy enough to withstand the uplift of excessive suction during short periods of very high wind.
Therefore proper fastenings to the claddings and fixing of the roof structure to frames or walls are necessary to prevent them being stripped off.

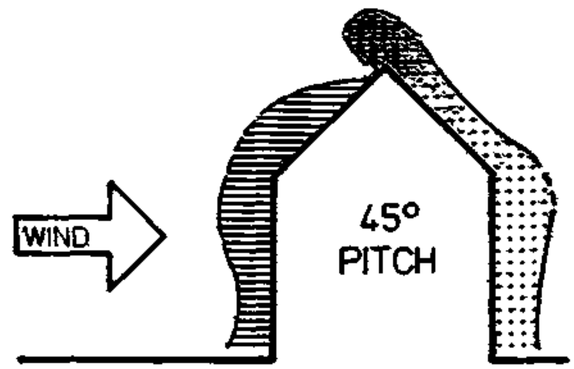

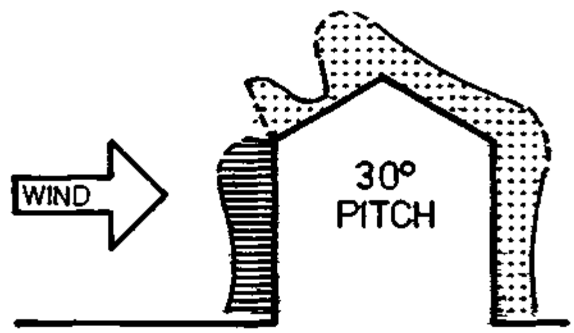

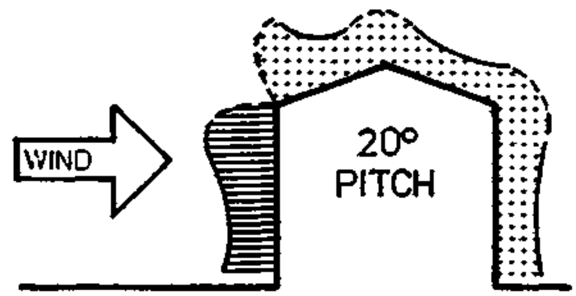

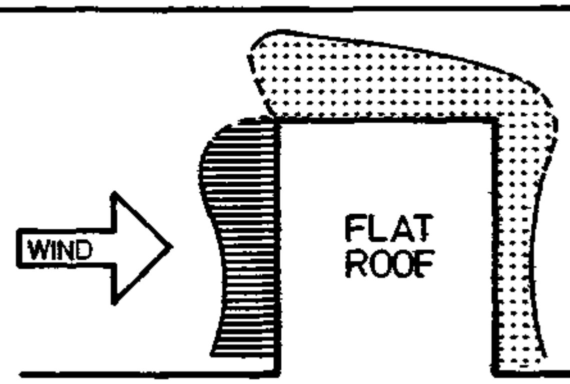

9.1.2 WEATHER RESISTANCE
is provided by the roof coverings and the nature of these will effect the form and some details of the roof structure.

WEATHER RESISTANCE

THERMAL INSULATION

9.1.3 THERMAL INSULATION
In most buildings thermal insulation in the roof is either essential or increases the comfort
- <u>in hot areas</u> thermal insulation keeps the heat out of the building
- <u>in cold areas</u> thermal insulation prevents the building from greater heat loss.

Thermal insulation, however, is rarely a factor affecting the choice of the roof type, since the normal methods of providing it are generally applicable to all forms of roofs.
These methods vary and involve
- flexible
  or
- stiff insulation materials.

in or under the roof cladding or structure or the use of self-supporting insulation materials such as
- wood wool
- compressed straw slabs

which are strong enough to act as substructure to the covering.
In the case of concrete surface structurs, light weight aggregate concrete may be used (either fully or partly).

FIRE RESISTANCE

9.1.4 FIRE RESISTANCE

Adequate fire resistance is necessary in order to give protection against the spread of fire from and to any adjacent buildings and to prevent early collaps of the roof.
These matters will be discussed later under the topic"Fire protection".

SOUND INSULATION

9.1.5 SOUND INSULATION
Most forms of roof construction provide for the majority of buildings an adequate degree of insulation against sound from extern. Sources. Only in special cases, such as concert halls in noisy localities or hospitals along highways with heavy traffic, precautions might be necessary and might also affect the choice and design of the roof structure.

The fact, that weight and discontinuity of structure are important factors in sound insulating construction, makes this problem difficult in the case of roofs.

TYPES of ROOF STRUCTURES

9.2. TYPES OF ROOF STRUCTURS

- The area of the roof together with the roof coverings (which may be defined as the 'SKIN' of the roof and which can be constructed in many different ways) are carried by the ROOF STRUCTURE

- In order to drain the rainwater properly the 'SKIN' has to be more or less inclined.

- The better the 'SKIN' of the roof is able to protect the roof structures and the space enclosed from rain and wind, the flatter the roof can be constructed.

- The different types of roofs may be broadly classified in three ways:
  according to the
  1) shape of the roof
  2) structure of the roof
     (+building materials + span)
  3) coverings of the roof
     (+angle of in clination)

- shape, materials and colour of the 'skin' of the roof are most important for the appearance of the building.
  Therefore shape, degree of inclination as well als the covering material should be in accordance with local envirement.

9.2.1 FLAT AND PITCHED ROOFS

- Flat roof:
  outer surface horizontal or inclined at an angle not exceeding 10°.
- Pitched roof
  outer surface sloping in one or more directions at an angle more than 10°.

FLAT and PITCHED ROOFS

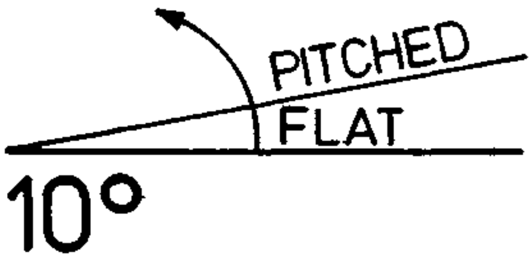

Climat and covering materials affect the choice between a flat or pitched roof.

- In hot, dry areas the flat roof is common (because there are no heavy rainfalls and the roof may form a useful out-of-door living room)
- In areas of heavy rainfalls, a steeply pitched roof quickly drains off rain.

Covering for roofs consist of

- unit materials, such as tiles and slates laid closed to and overlapping each other and
- membrane or sheet materials, such as asphalt, bitumious felt or metal sheeting, whith sealed or specially formed watertight joints.

STRUCTURE of the ROOF

9.2.2 STRUCTURE OF THE ROOF

From a structural point of view roof structures may be conside-red broadly as

- two - or
- three - dimensional forms.

- Two - dimensional structures for practical purpose have LENGTH and DEPTH only and all forces are resolved in two dimensions with in a single vertical plane (only SPANNING FUNCTION).
- Three-dimensional structures have LENGTH, DEPTH and BREADTH, and forces are resolved in three dimensions within the structure. These forms can fulfil a COVERING and ENCLOSING FUNKTION as well als that of SPANNING. The general term is SPACE STRUCTURES.

TWO-DIMENSIONAL ROOFS include :

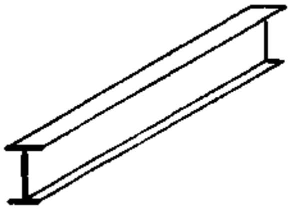

BEAMS

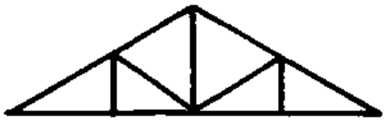

TRUSSES

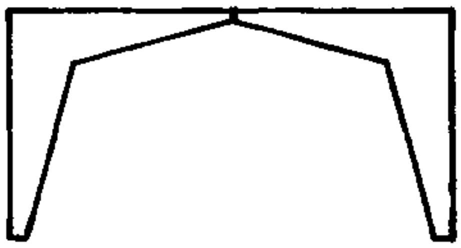

RIGID FRAMES

- beams
- trusses
- rigid frames of all types, including arch ribs

THREE DIMENSIONAL ROOFS include :

- cylindrical and parabolical shells and shell domes

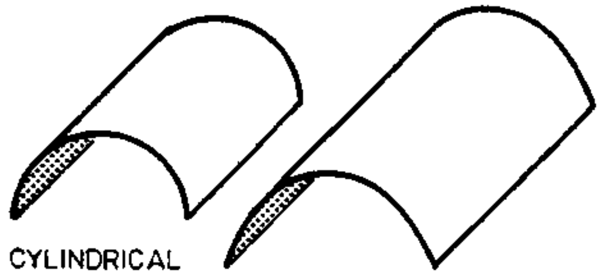

CYLINDRICAL SHELLS PARABOLICAL SHELLS

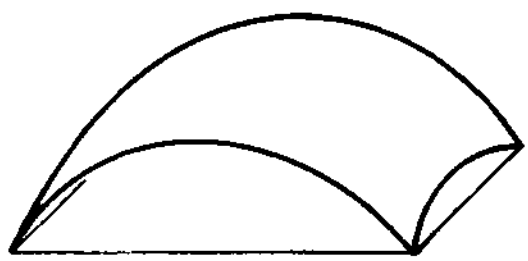

SHELL DOMES

- doubly curved slabs, such as hyperbolic paraboloids and hyperboloids of revolution

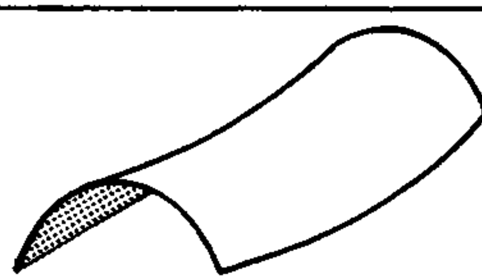

HYPERBOLIC PARABOLOIDS

- grid structures, such as space frames, space grids, grid domes and barrel vaults

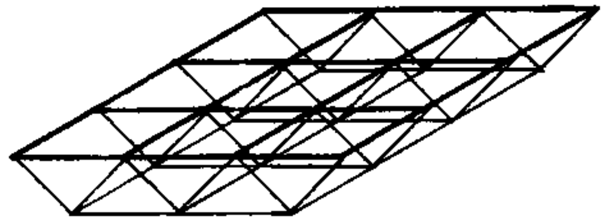

- folded slabs and prismatic shells

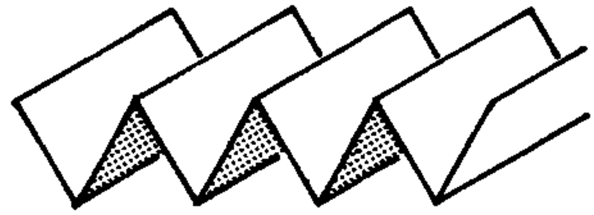

- suspended or tension roof structures.

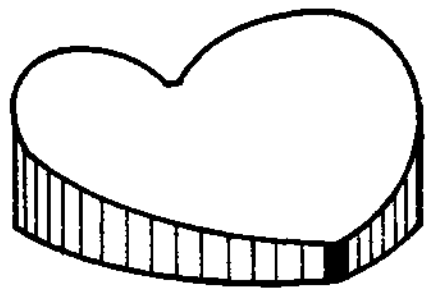

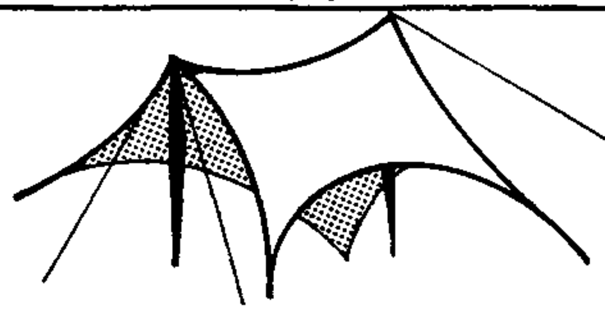

SINGLE DOUBLE & TRIPLE ROOFS

Roofs, constructed of two - dimensional members are classified as

- single
- double and
- triple rooefs

according to the number of horizontal stages necessary economically to transfer the loads to the supports.

SINGLE

- in single roof construction the roofing system is carried directly by one set of primary members, spanning between the main supports

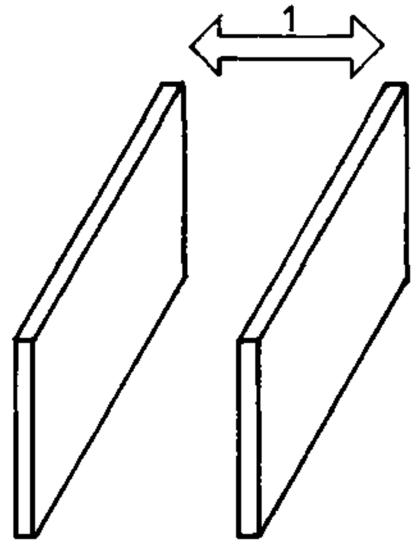

SINGLE ROOF

DOUBLE

- As the span of the primary members increases a point is reached at which it becomes more economical to use larger members spaced further apart to support secondary members to carry the roofing system. This is known as double Roof Construction

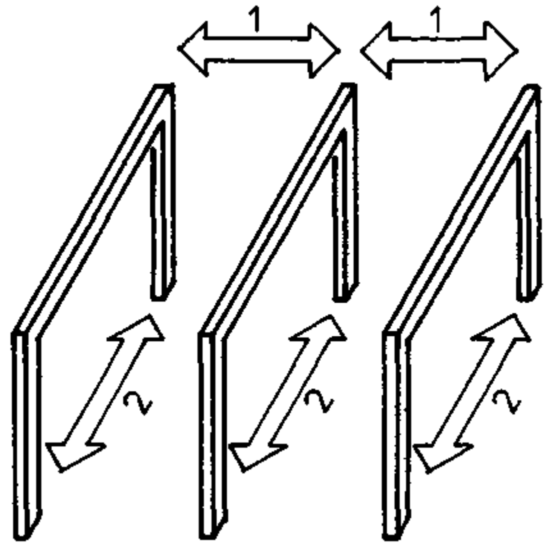

DOUBLE ROOF

TRIPLE

- In some circumstances spans are such that three sets of members are required to produce an economic structure, resulting in three stages of support
  This is called Triple Roof Construction.
- This classification is applied to both flat and pitched roofs (as well as to floor construction).

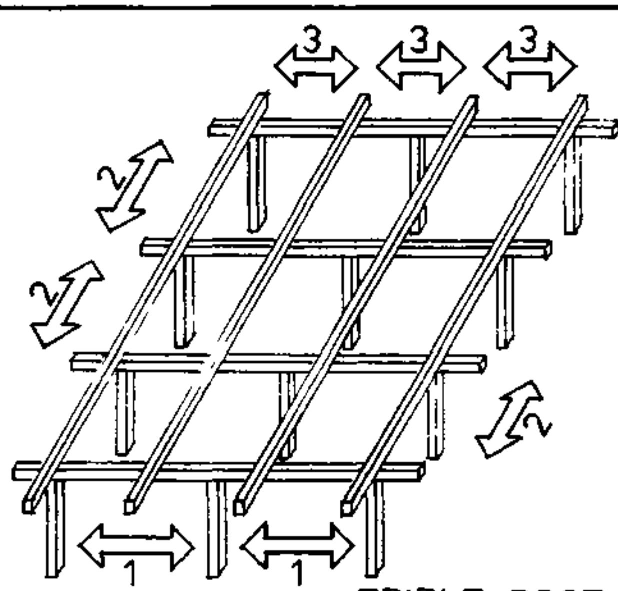

TRIPLE ROOF

9· ROOFS compiled: D. VOLKE OCT. '79	TYPES OF ROOF STRUCTURES	BUILDING CONSTR — LECTURE — CET 5031 / 19·210
TCA TECHNICAL COLLEGE ARUSHA CHUO CHA UFUNDI ARUSHA	CIVIL ENGINEER. DEPARTMENT	10

LONG and SHORT SPAN ROOFS

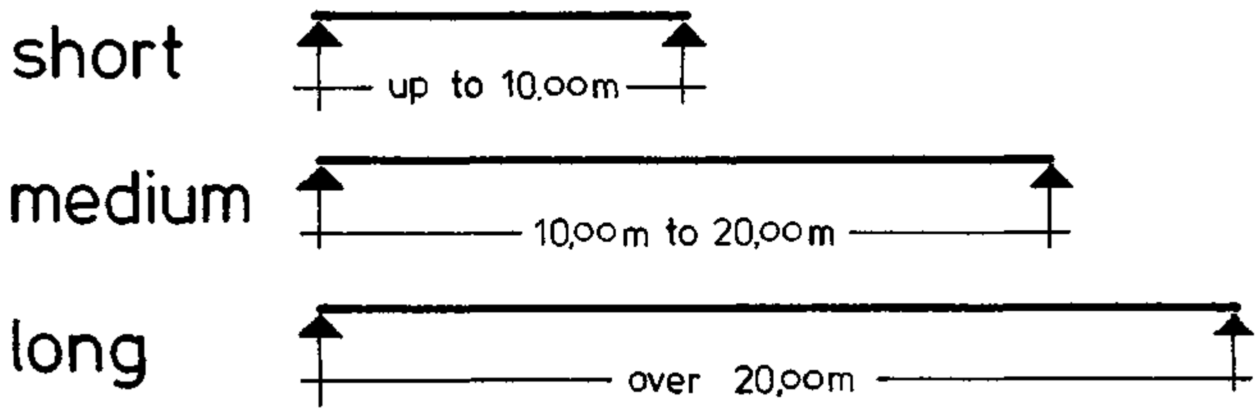

9.2.3 LONG AND SHORT SPAN ROOFS

Roof structures are classified in terms of span as

- short span (up to 10.oom)
- medium span (10,oo to 20.oom)
- long span (over 20.oom)

- Short span construction will usually be cheapest
- As an increase in the distance between supports usually results in an increase in the cost - comparible with requirements of clear floor area should always be adopted in design.
- Three dimensional structures are normally <u>not</u> economic over <u>short</u> spans.

N.B.

N.B. All types of roof structures, which are introduced in the following, refer to the SHORT SPAN CONSTRUCTION only.

FLAT ROOFS

9.3 FLAT ROOFS

9.31 PHYSICAL AND STRUCTURAL PROB LEMS.

To design a building having a FLAT ROOF, seems to be very simple, because in a drawing using a scale of 1 : 100 or 1 : 200, it is just indicated as a double line and does not show the physical and structural problems behind. Plenty of flat roofs (in Arusha and all over TAN) are leaking, because of

- insufficient (or wrong) construction, and
- lack of adequate building materials (expecially for thermal insulation and waterproof membranes).

9.32 STRUCTURE OF A FLAT ROOF

STRUCTURE of a FLAT ROOF

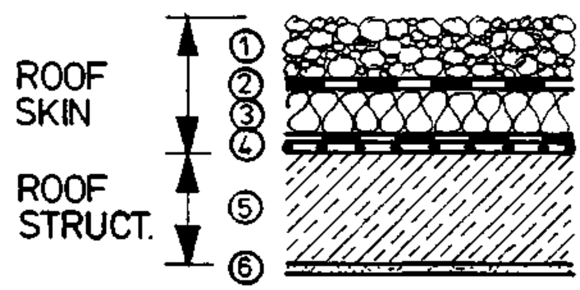

① PROTECTION OF THE SKIN
② WATERPROOF MEMBRANE
③ THERMAL INSULATION
④ VENT. VAPOUR BARRIERE
⑤ ROOF STRUCTURE
i.e. REINF. CONCRETE
⑥ CEILING

Flat roofs have to be drained through rainwateroutlets, such as:

- central internal rainwater inlet (special gully)
- tapering gutter discharging to an external rainwater downpipe or
- water spouts

THERMAL INSULATION MATERIALS

9.33 THERMAL INSULATION MATERIALS
For most types of roofs (especially for flat roofs) thermal insulation is provided by NON-STRUCTURAL materials of two types with:
1) Low thermal conductivity
2) high thermal reflectivity.

Materials of low thermal conductivity have a <u>high percentage volume</u> of GAS or AIR VOIDS, which retard the transmission of heat.

Most efficient are materials with a CLOSED AIR or GAS CELL STRUCTURE, such as EXPANDET PLASTICS, used in board or granule form, a few mm thickness of which give insulation eaqual to a substantial thickness of brickwork, dense concrete or stone.

Typical of this class of insulators are :

QUILTS

a) QUILTS: consisting of
- glass fibre
- rock wool or slag wool (classified as MINERAL WOOL)

SLABS

b) SLABS : of
- wood wool
- straw boarded
- fibre boarded
- expanded plastics
- cork
- semi rigid glass fibre
- foamed glass
- thick, lowdensity soft wood strips (preferably 50 mm and above)

GRANULATED or NODULATED materials

c) GRANULATED or NODULATED materials used as loose fills, in layers on ceilings or fills in cavities:
- pelleted slag wool
- exfoliated vermicolite (a naturally occuring micaceous material which expands when its constained water is vaporized by heat).

FOAMED PLASTICS

d) PLASTICS FOAMED in - SITU and injected into cavities to fill them.
(note: The FOAM stabilizes the insulating air in the cavity by incorporating it as millions of very small cells within the materials.)

AIR or GAS CELLS

e) AIR or GAS CELLS within a basically highdensity material, as in foamed concrete or screed.

LIGHTWEIGHT AGGREGATES

f) LIGHTWEIGHT - AGGREGATE concrete and screeds which, to be effective, must be of adequate thickness, dried out and kept dry.

SPRAYED INSULATION

g) SPRAYED INSULATION, of asbestos fibre with water-activated binders, or lightweight plasters, applied to a thickness of 12 mm or more, on exposed protected internal surfaces.

NOTE: The presence of MOISTURE in an insulation material will REDUCE its efficiency.

9.34 SINGLE AND DOUBLE FLAT ROOF CONSTRUCTION

The construction of a FLAT ROOF (in timber as well as in reinf. concr.) is comparable with that of an UPPER FLOOR.

SINGLE FLAT ROOF

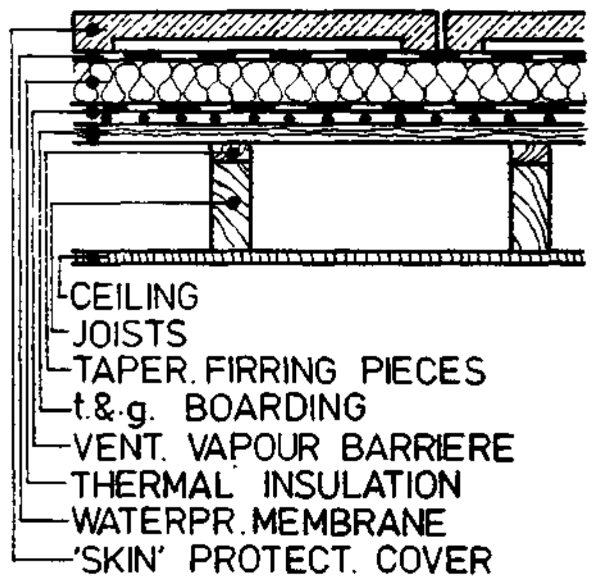

DOUBLE FLAT ROOF

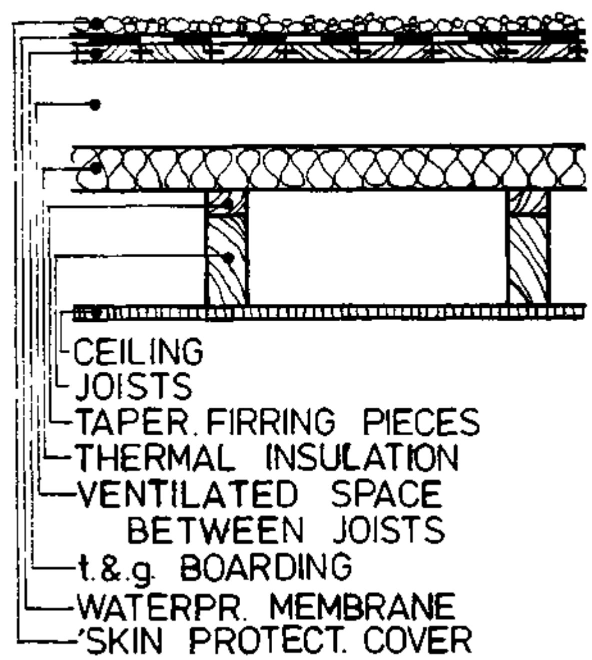

ASPHALT COVERED FLAT ROOFS

Is widely used but insufficient, because the roof skin is not properly ventilated and there is no protection cover against drying out of the asphalt by the sun. (ref. Fig.)

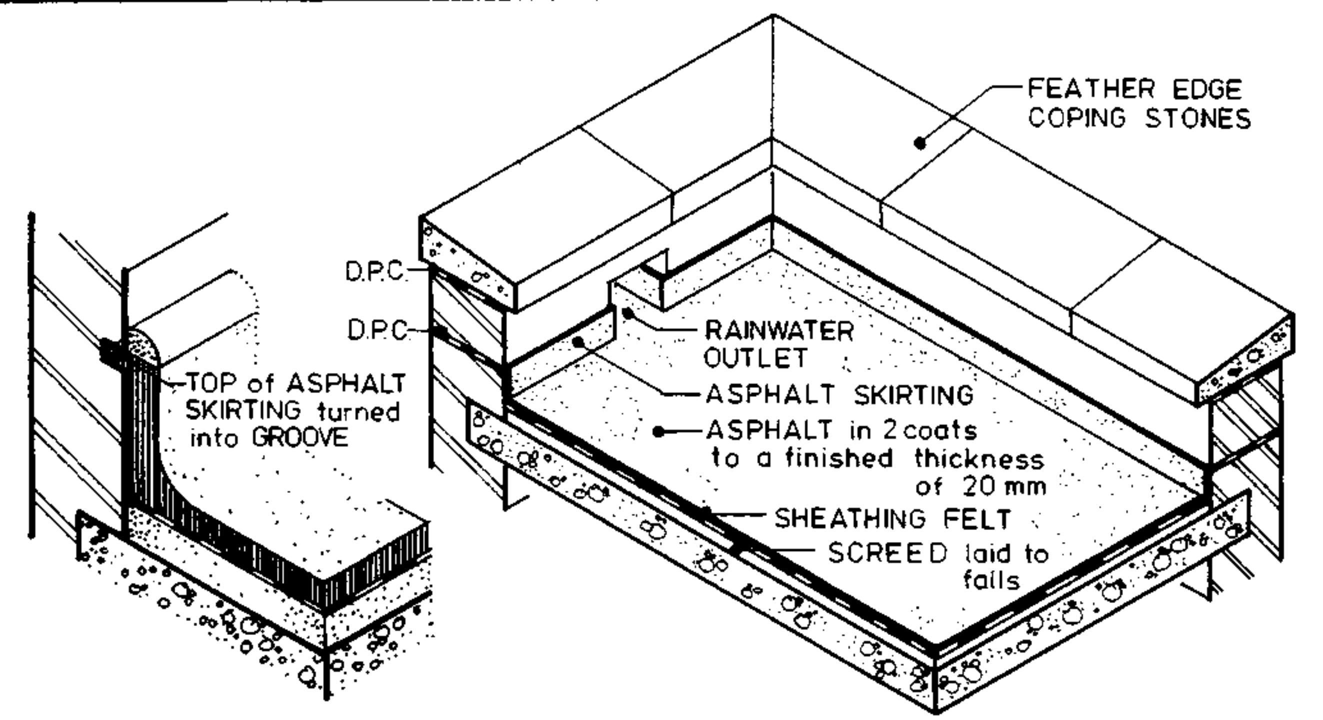

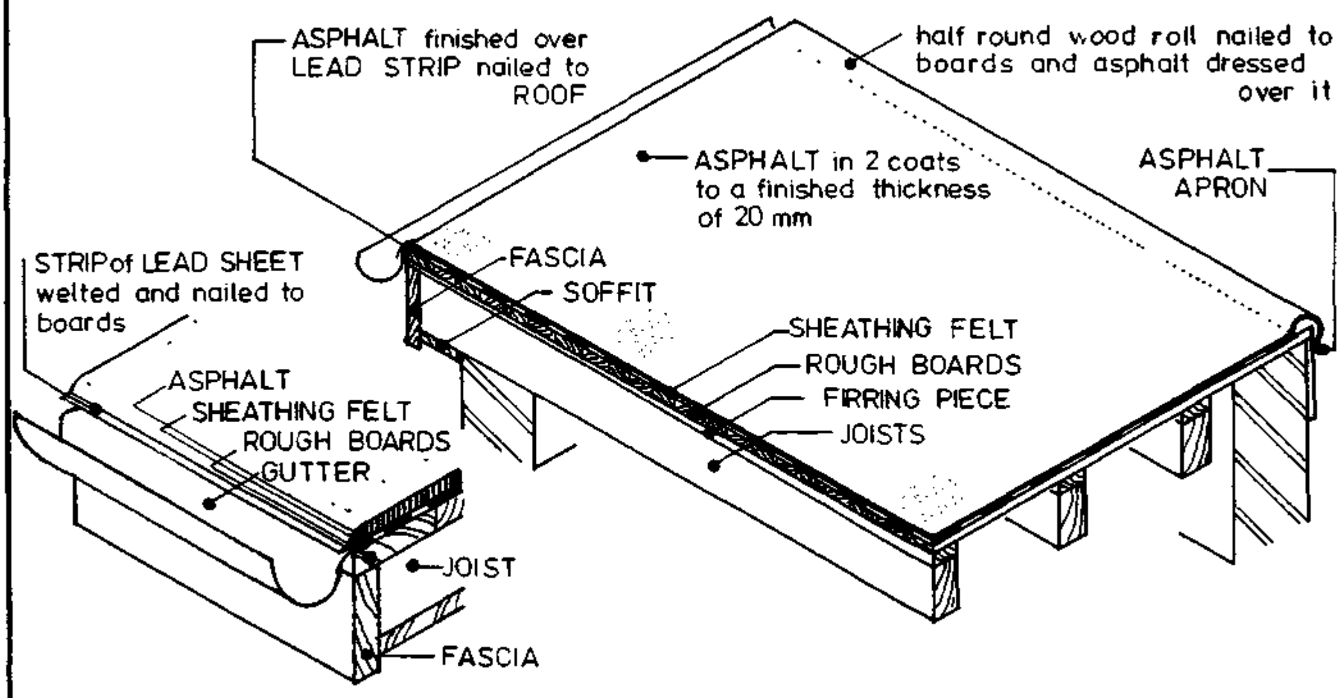

9· ROOFS
compiled: D. VOLKE
OCT. '79

FLAT ROOFS

BUILDING CONSTR.
— LECTURE —
CET 5031 / 19.316

TCA TECHNICAL COLLEGE ARUSHA
CHUO CHA UFUNDI ARUSHA

CIVIL ENGINEER. DEPARTMENT

PARAPET WALLS

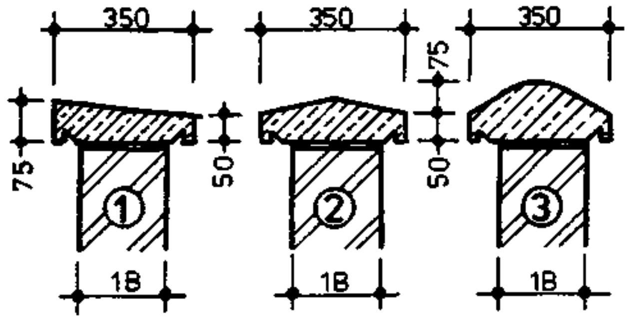

①
②
③

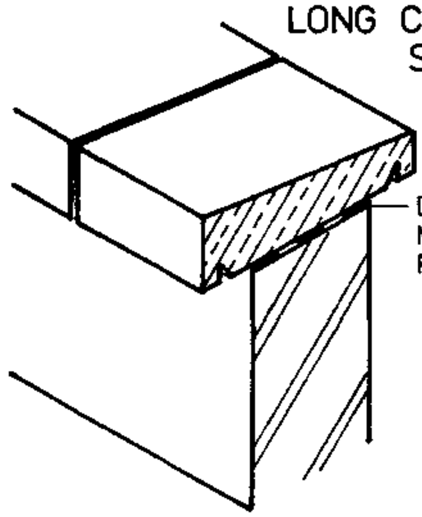

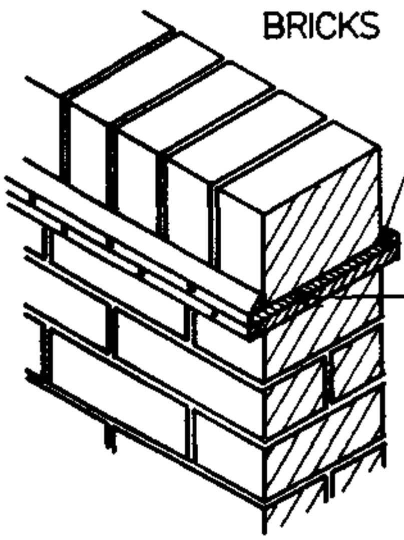

9.35 PARAPET WALLS

External walls of buildings are raised above the level of the roof as PARAPET WALLS for the sake of appearance of the building as a whole.

Parapet walls are <u>exposed</u> on all faces to driving rain and wind and are much more liable to damage than external walls below eaves level.

Parapet walls are <u>not weighted down</u> by floors and roofs and it is generally accepted that they should not be built above roof level higher than six times the least thickness of the parapet wall.

Parapet walls to be <u>covered or capped</u> with some non-absorbent material such as:

- natural stone (protective and decorative)
- artificial stone: Stones are made with a core of concrete faced with a mixture of crushed stone particles and cement.
- brick capping: Bricks are laid - on - edge on top of two coarses of creasing tiles laid-breaking joint-in cement mortar.
- D.P.C. beneath coping stones within the Parapet walls.

PITCHED ROOFS

9.4 PITCHED ROOFS

9.41 SHAPES OF PITCHED ROOFS

- Monopiched Roof
- Lean-to Roof
- Ridge (gable) Roof
- Hipped Roof
- Mansard Roof
- Butterfly Roof
- Shed Roof
- Tent Roof

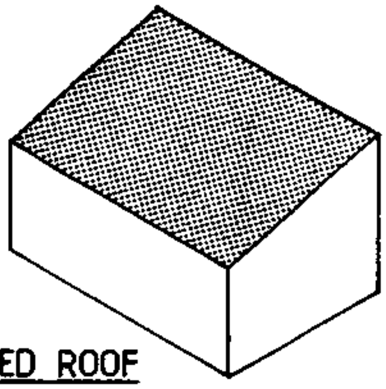

MONOPITCHED ROOF

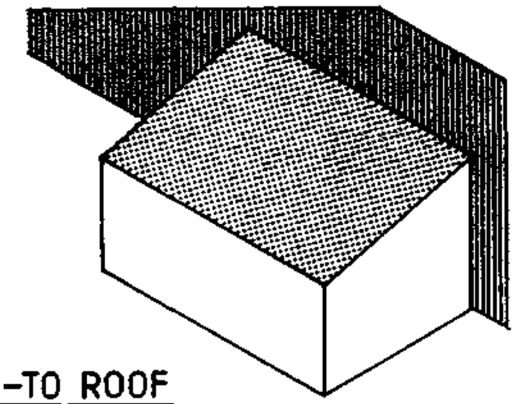

LEAN-TO ROOF

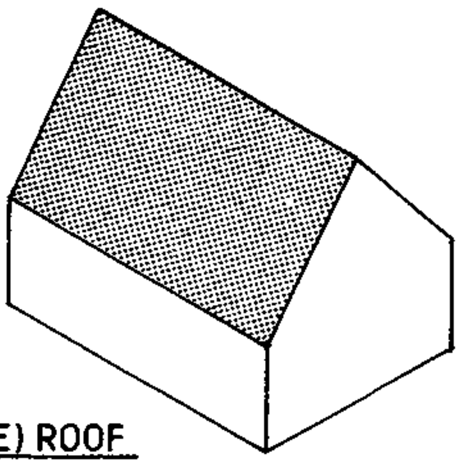

RIDGE
(GABLE) ROOF

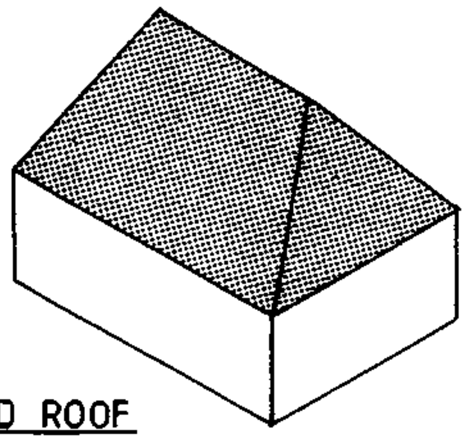

HIPPED ROOF

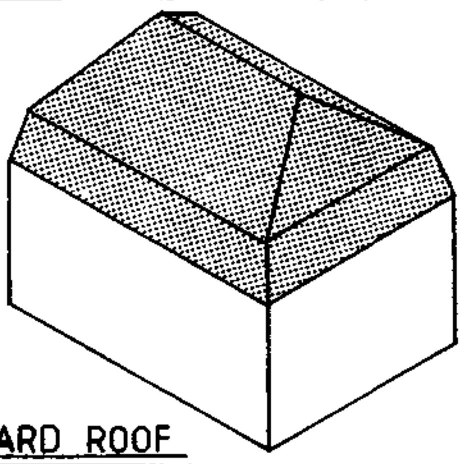

MANSARD ROOF

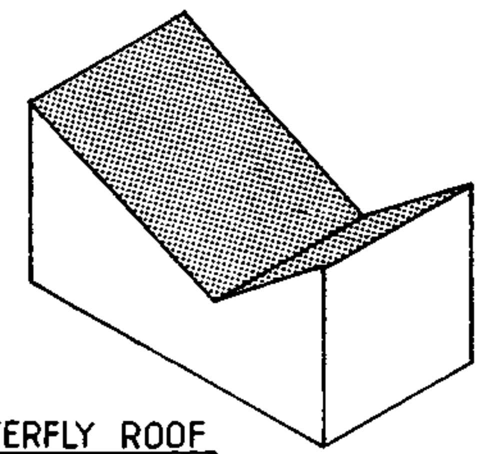

BUTTERFLY ROOF

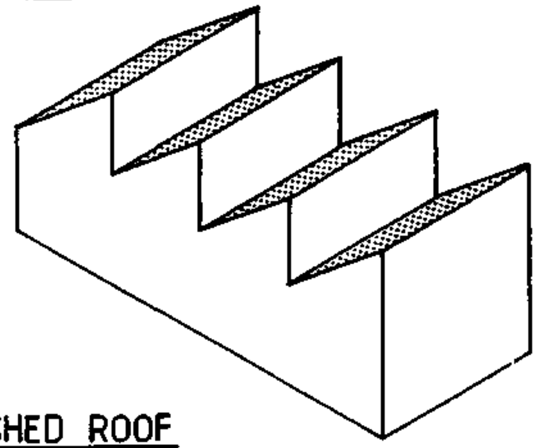

SHED ROOF

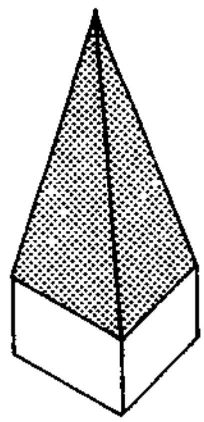

TENT ROOF

ROOFING TERMINOLOGY

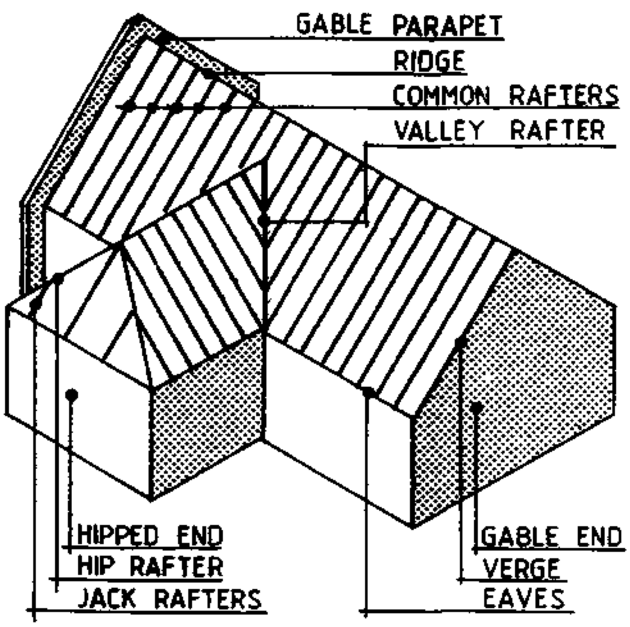

9.42 TERMS

9.43 TYPES OF PITCHED ROOFS IN TIMBER (STRUCTURES)

1.

MONOPICHED ROOF

I. Mono-(single) pitched Roof:

Constructed similar to a timber flat roof or a timper upper floor (joists = rafters). Because of the pitch of the roof a BIRDS MOUTH at the end of the rafters has to be provided to avoid sliding off the wall plate. (ref. fig.)

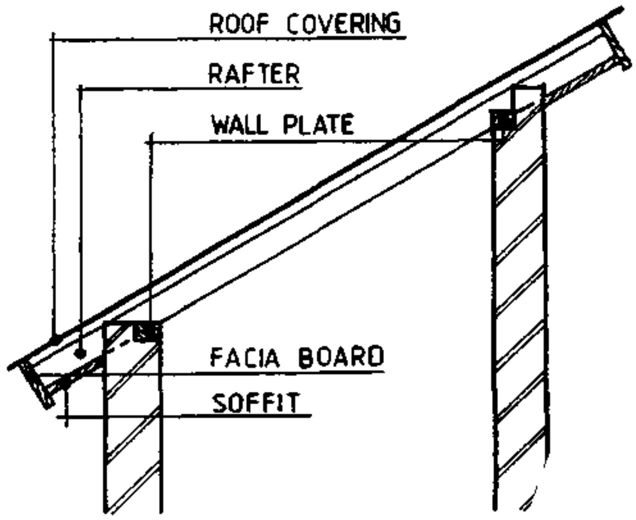

2.

LEAN-TO-ROOF

II. LEAN - TO ROOF

Is a monopitch roof of which the tops of the rafters are pitched against a wall. The feet of the rafters are birds mouthed over a wall plate as for a monopitched roof, and the upper ends over a plate supported on the wall by corbel brackets or by any means of supporting floor joists.

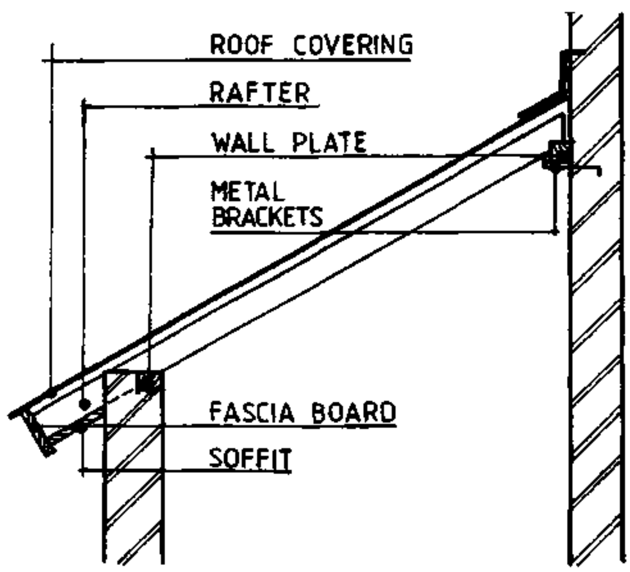

III. COUPLE ROOF

This ist the simplest, but not necessarily the most economic form of ridge roof sloping down in two directions from a central apex or ridge as it is technically termed. It consists of pairs, or couples, of rafters pitched against each other at their heads with their feet bearing on opposite walls.

When two spanning members are arranged in this way the junction at the ridge forms a mutual support so that the span of each is the distance between this point and its lower support. The depth of the rafters in a couple roof may, therefore, be considerably less than that of those in a flat or monopitch roof of the same overall span. This is an advantage from the point of view of economy of rafter material, but the arrangement of rafters results in a tendency for the ridge to drop under the roof load with a resultant outward spread of the rafter feet. In order to keep the roof stable this outward spread or thrust must be resisted by sufficiently heavy supporting walls. If the walls are tall they will, therefore, be thick and expensive. For 215 mm solid or 250 mm cavity walls of normal height the roof must be limited to a maximum clear span of about 3.oo m to keep the thrust within acceptable limits. The clear roof space given by this roof can, however, be used with advantage over wider spans than this if the roof pitch is steep and the eaves are low. This has the effect (1) of reducing the outward tnust of the rafters and (2) of reducing the height of any supporting walls and, therefore, their tendency to overturn, so that their thickness may be kept to a minimum.

The feet of the rafters are birdsmouthed over wallplates and the upper ends butt against a flat board called a ridge piece or board, to which they are nailed. This board facilitates fixing of the rafters and keeps them in position lateraly.

3.

COUPLE ROOF

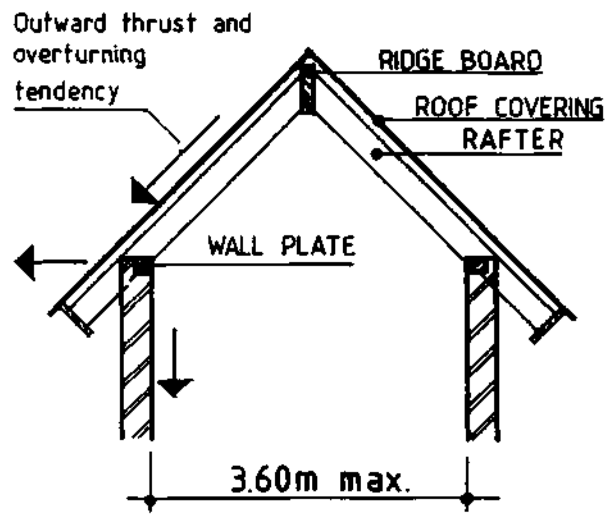

IV. CLOSE COUPLE ROOF

This roof results from the introduction of horizontal members to tie together the feet of each pair of rafters and prevent their outward spread. This forms a simple triangulated structure and produces vertical loads on the supports with no tendency to overturn the walls so that their thickness need take no account of this. These members, known as ties, are spiked to the feet of the rafters at plate level and if they are used to support a ceiling, as commonly is the case, they are called ceiling joists. The maximum economic span of this roof is about 6.10m, this being limited not by the spread of the rafters but by the economic sizes of the roof members. It is generally found most economic to restrict the depths of rafters to about 100 mm and, depending on the weight of the roof covering and the pitch and spacing of the rafters, this depth can be used over spans of about 4.60 m to 5,20 m

The function of ceiling joists as ties can be fulfilled by quite small sections but, as they act also as beams supporting their own weight and that of the ceiling, they tend to sag or deflect and they must be large enough to keep this within acceptable limits. For spans of the order given above quite large ceiling joists would be necessary and it is found more economic to reduce their effective span by suspending them from the ridge.

The longitudinal 75mmx50mm binder or runner skew nailed to the joists permits the hangers to be fixed to it at every third or fourth joist spacing rather than to each joist, thus economising in timber.

Fixing of hangers to runners should be deferred until the roof covering has been laid in order to avoid deflection of the ceiling joists due to the transfer through the hangers of any slight movement of the roof structure as it takes up the load.

4.

CLOSE COUPLE ROOF

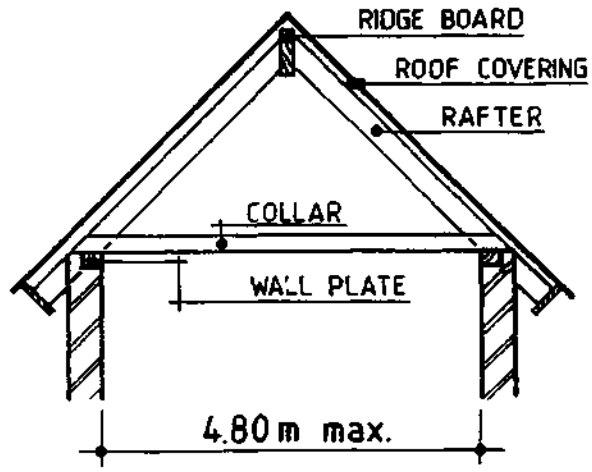

5.

COLLAR ROOF

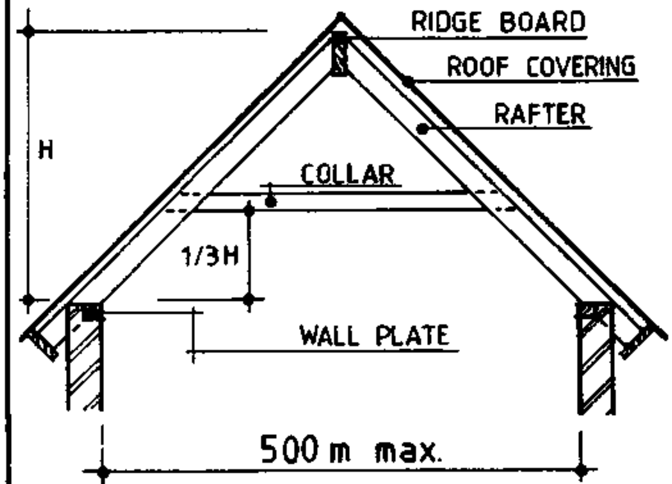

V. COLLAR ROOF

In this roof tie members are used but at a higher level than the feet of the rafters and they are called collars. It can be used for short spans not exceeding 4.90 m when it is desired to economise in walling, since the cailing will be raised and the roof may, therefore, be lowered on the walls to the same extent for a given height of room. The influence of the collar on the spread of the rafters is less marked the higher it is placed and half the rise of the roof is the maximum height at which it should be fixed. The size of the collars is the same as for close couple ties of an equivalent span. In the past a dovetail halved joint at the junction of collars and rafters was normal but this involves considerable labour and it is cheaper and stronger to use a bolt and timber connector.

6.

DOUBLE or PURLIN ROOF

for spans up to 7.20 m

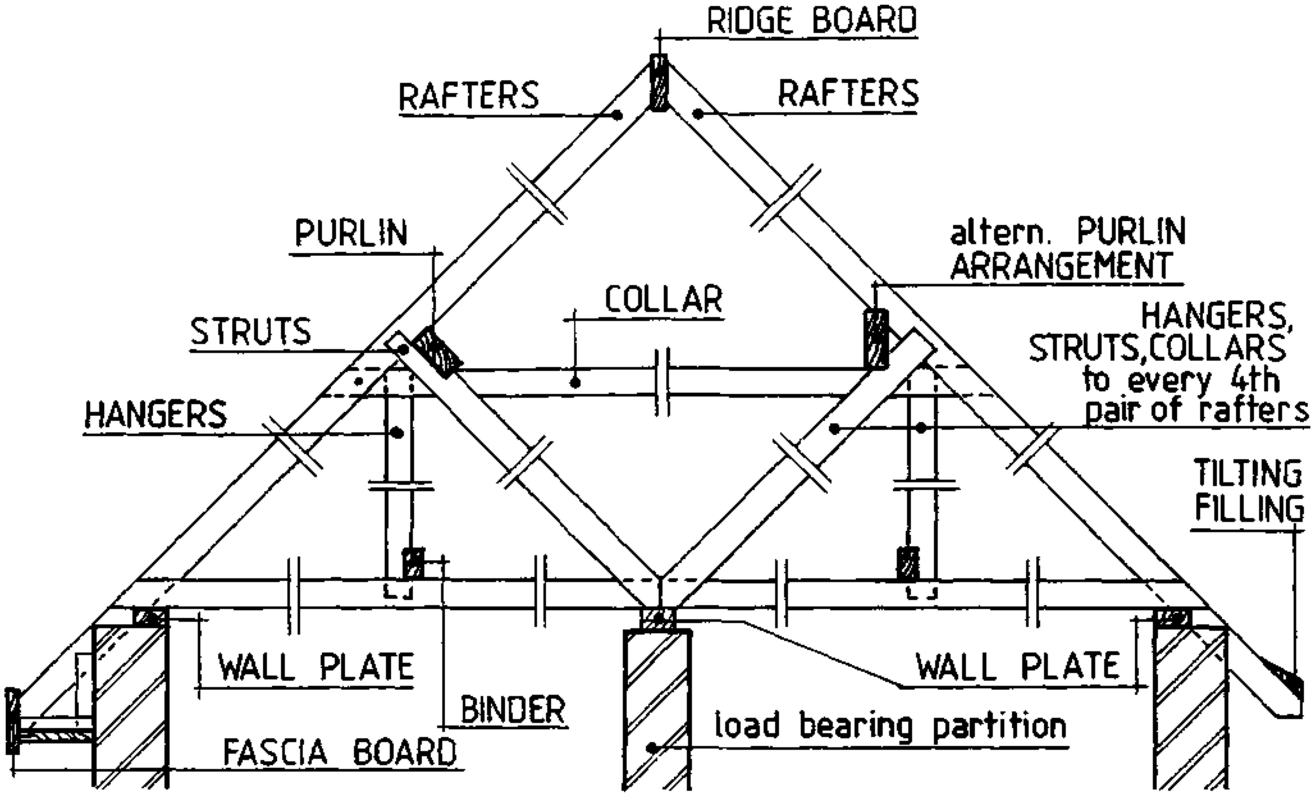

VI. DOUBLE OR PURLIN ROOF

When the span of a roof is more than 6.10 m and requires in a couple type roof rafters much greater than 100 mm in depth it is cheaper to introduce some support to the rafters along their length, thus reducing their effective span, rather than to use large rafters. This support could be in the form of a strut to the centre of every rafter resting on a suitable bearing below, such as a partition or wall but, as in the case of ceiling joist hangers referred to above, it is more economical in timber to introduce a longitudinal beam on which all the rafters bear and to support this member at intervals greater than the rafter spacing. The introduction of this beam, or purlin as it is called, as a second stage of support brings the structure into the double roof classification. Although this introduces extra members into the construction the total cube of timber in the roof (and the weight of the roof) rises less with increase in span than if the rafters were increased in size.

The purlins may be supported directly by cross walls or partitions at sufficiently close spacing along the length of the purlins or by struts off any suitably placed walls partitions or chimneys. The size of the purlins will be governed by the weight of the roofing system, the spacing of the purlins (if the length of rafter supported) and their span. As with rafters an increase in span results in increased size and cost of purlins and the span should, therefore, be kept within economic limits. Depending on the combination of weight and rafter length a 225 mm x 75 mm purlin will span from about 2.5o m to 3.7o m. If the spacing of available supports is such that purlins much larger than this are required it may be better to select an alternative method of construction.

Purlins may be placed vertically or normal to the rafters. The former ist preferable when the purlin bearing is directly on walls or on vertical struts, the latter is sometimes more convenient when inclined struts are used, which is the case when supports do not occur immediately under the purlins. Where possible inclined struts should be paired so that those to opposite purlins meet at the same point and bear against each other over the support. If this should result in struts at

PURLIN ROOF

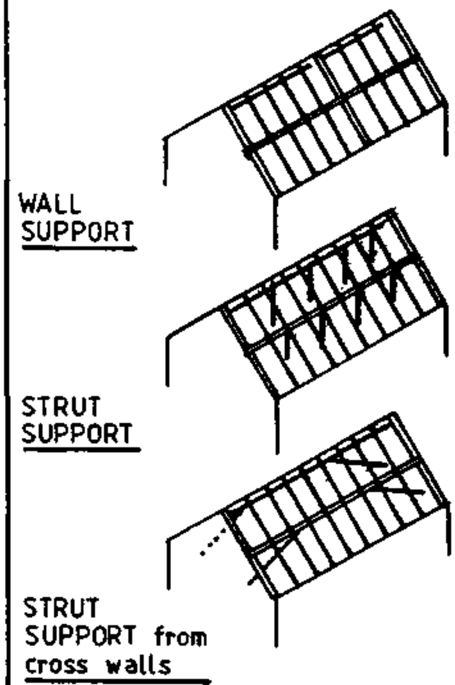

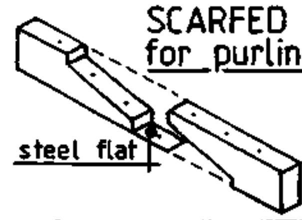

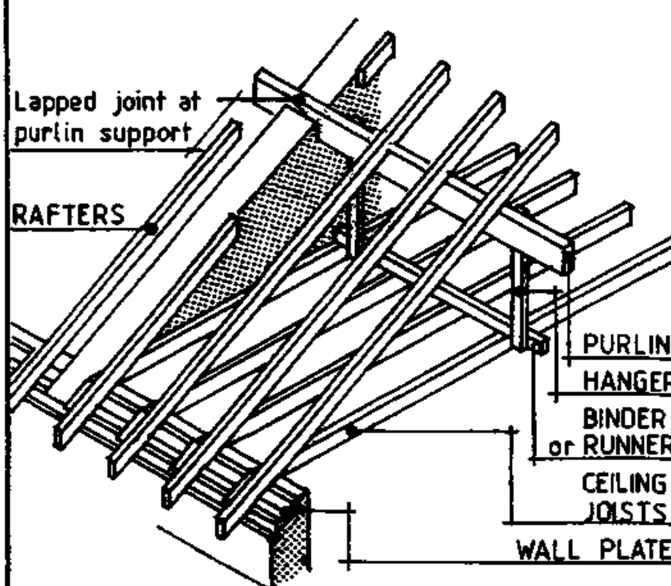

an excessively low angle a spreader piece nailed to the top of a ceiling joist may be used to increase the angle of the struts.

Joints required in the purlins should be made over supports wherever possible in the form of a lapped joint. Where joints must occ ur at points between bearings a stronger joint is necessary and a splayed scarf joint must be adopted.

As the span of the roof increases the size of the ceiling joists can be kept within economic limits by increasing the number of points of support and in a purlin roof hangers carrying binders can be suspended from the purlins. When the purlins are normal to the rafters the hangers are fixed to a rafter face immediately above the purlin.
Where no supports exist at intervals over which solid timber purlins of an economie size can span, but where suitable widely spaced cross walls exist, then deep beam purlins may be used. The maximum span over which they may be used in these circumstances depends to a large extent on the depth available for the beam. Two types are discussed below.

TRUSSED PURLIN

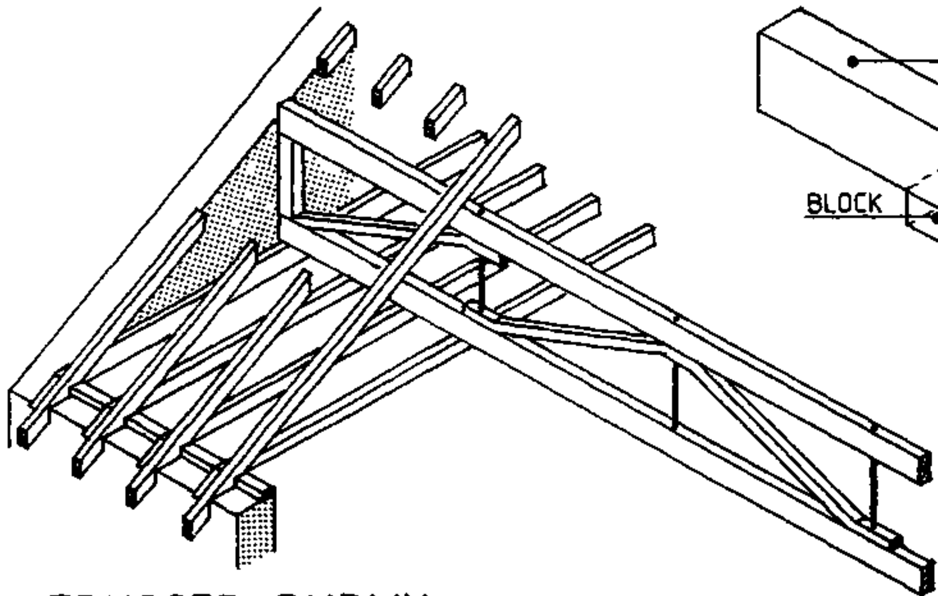

TRUSSED PURLIN

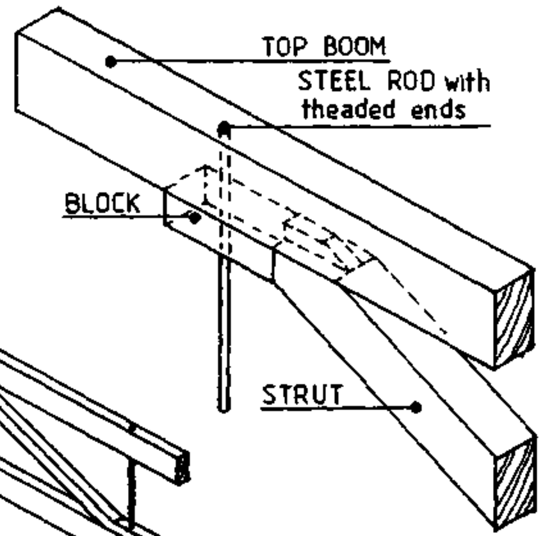

DETAIL of CONNECTION

Trussed purlin

This ist a trussed, lattice or framed beam or girder all of which are synonymous terms for a beam built up of triangulated members. For a given load and span as the depth of a beam increases the bending stresses at top and bottom decrease and less material is required in the beam. This economy of material can be developed further by concentrating the majority of the material in the beam at the top and bottom where bending stresses are at a maximum. In the trussed beam structural depth is obtained with a minimum of material at the centre or web by means of relatively thin triangulating members which connect the top and bottom flanges or booms. For maximum economy bending stresses in the members should be avoided as far as possible

To this end the members should be arranged on the 'centre line' principle as far as is practicable that is to say at each junction of members their centre lines should intersect at one point. For the same reason loads should be applied only at the node points With trussed purlins however, the rafters are closely spaced along the top boom and do not all bear at a node point; some bending therefore occurs and the boom size must take account of this.

PURLIN BEAM

Purlin beam
The alternative to a trussed purlin is the thinwebbed timber beam, which may be specially fabricated or of which there are a number of mass-produced types on the market. This consists of a plywood web rebatted into and glued to top and bottom booms or glued at top and bottom between two timbers to form the booms. In deep beams of this type some stiffening against buckling of the thin web is required in the form of vertical stiffeners glued at intervals on each side of the web. In one proprietory beam this stiffening is obtained by using a vertically corrugated ply web instead of applied stiffeners.
A trussed purlin invariably makes use of the full depth between rafters and ceiling joists as shown, to provide direct support to the latter without hangers but when ply-webbed purlin beams are used they are unlikely to be as deep as this, exept in very low-pitched roofs, and hangers for the ceiling joists would be required.

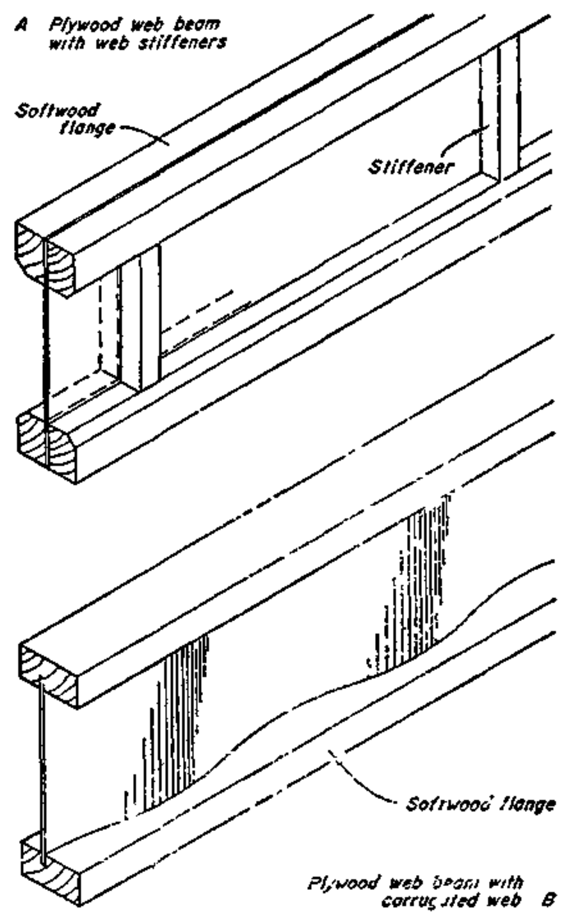

135 Purlin beams

7. TRIPPLE or TRUSSED ROOFS

VII. TRIPPLE or TRUSSED ROOFS

The use of purlins as just described presupposes the presence of supporting elements at appropriate spacings. Where these do not exist or where, for some reason, this form of construction may not be suitable, for example, when the roof span is large and multiple purlins are necessary, an alternative method of supporting purlins is by structural members spanning the width of the roof at intervals along its length, the tops of which follow the pitch of the roof. These may be in the form of either a triangulated structure known as a roof truss or of deep rafters fixed at their feet rigidly to a pair of supporting columns to form one structural component. The latter are called rigid frames.

A ROOF TRUSS consists essentially of a pair of RAFTERS (or a single rafter in a monopitched roof) triangulated to provide support for the purlins, preferably at the node points.

For short span roofs two rafters lying in the same plane as their neighbours may be triangulated to carry purlins which are fixed immediately under them, so that the purlins are in the same relative position to the other rafters which they in fact support. These trusses are placed at relatively close centres. For wider spans resulting in large loads on the truss members, the size of a normal rafter is usually to small to be used in the truss and separate rafters are triangulated and carry the purlins on their backs. These rafters, therefore, lie below the level of the normal rafters and do not directly support the roof covering.
The rafters of the truss are called the PRINCIPAL rafters and the normal rafters the COMMON rafters.

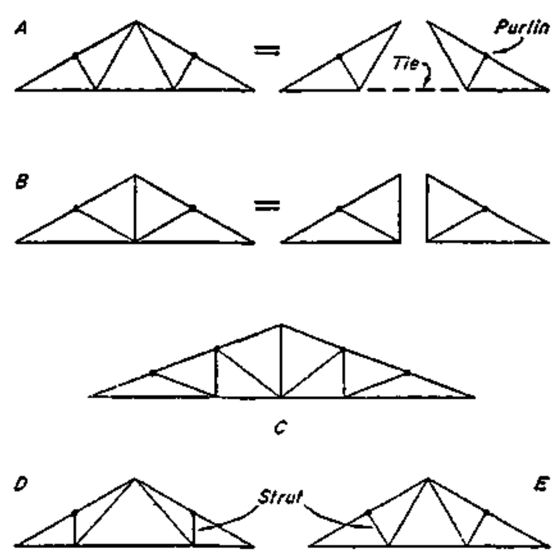

TRUSS CONSTRUCTION in TIMBER

Truss construction in timber

- A roof truss must carry, via the purlins, the loads on a number of adjacent rafters.
- The forces on the joints between its members are, therefore, greater than those on the joints in a single or double roof structure and the use of one or two nails commonly used to secure members in the latter is insufficient in a truss.
- The detailed construction of a truss depends largely on the method adopted for joining the parts.
- Earlier methods involving mortice and tenon joints,necessitated relatively large amounts of timber at the junctions and, therefore, large heavy members (often larger than justified by the stresses in them) and the incorporation of large metal straps particularly at the tension points since the mortice and tenon joint is efficient only in compression.
- This type of truss is exemplified by the traditional king-post and queen-post trusses which, for these reasons, are now absolete.

- There are three modern methodes of joining the members:
  1 nailed joints
  2 bolt and connector joints
  3 glued joints and sometimes a combination of two.

- These methods require the members to be laid one against the other, or LAPPED as it is termed, to make the joint or - alternatively - require the use of cover plates, or GUSSETS, when the members butt one against the other.
- If two members lap, the joint is called SINGLE LAP JOINT If one member lappes by two other members, it is called a DOUBLE LAP JOINT (also known as SANDWITCH CONSTRUCTION).
- In a single lap joint the joint is under eccentric loading. For small span trusses carrying light loads this is not significant but when the joints carry large loads eccentricity should be avoided by the use of double lap joints. Double members are also used in order to obtain a satisfactory arrangement of members in the truss as a whole for jointing purposes.

(1) NAILED TRUSSES:

(1) NAILED TRUSSES:

Jointing by nails is the least efficient of the three methods - but a traditional and simple method.
By preboring nail holes and using wide, thin members to provide ample fixing area, efficient structures may be obtained, particularly where light - weight roof coverings are used.
The arrangement of nails to be calculated.

An example of the application of nailing in this manner is shown in the figure, where sandwich construction is used to carry corrugated asbestos cement sheeting over spans up to 6.1om. The principal rafters and horizontal tie are each formed by two boards, 32 mm thick, and the struts and secondary ties are 100 mm x 50 mm seantlings sandwiched between, the joints at these points being made by direct nailing between the members. As the rafter und tie members lie in the same plane and butt against each other at the feet of the truss it is necessary to use gussets to effect a joint at these points. The gussets here are formed by 25 mm boards on each side set normal to the rafters and securely nailed to each member . The extension of the gusset by two vertical boards increases the rigidity of the whole truss.
The double members at the feet are blocked apart by 5o mm pakking pieces and at the ridge the rafters are secured to each other by a 25 mm board on each side.

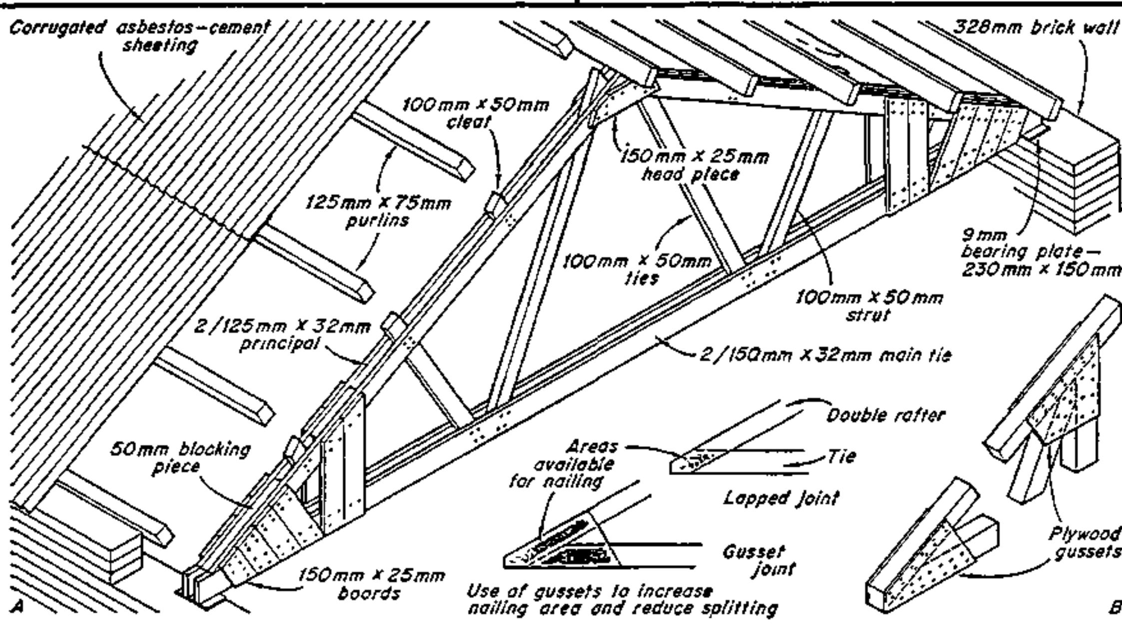

137 Nailed timber truss

9· ROOFS
compiled: D.VOLKE
OCT. '79

PITCHED ROOFS

BUILDING CONSTR.
——LECTURE——
CET 5031 / 1

TCA TECHNICAL COLLEGE ARUSHA
CHUO CHA UFUNDI ARUSHA

CIVIL ENGINEER. DEPARTMENT

NAILED TRUSSES

Struts and secondary ties project beyond the rafters and 5o mm cleats are fixed at the intermediate purlin position to form seatings for the purlins. By joining them together the struts and cleats also serve to stiffen the thin rafter members which, being in compression are liable to buckle.
These trusses would be spaced 3.oo m to 3.6o m apart depending on the weight of the roof covering and the size of the purlins used. The point loads from the truss at its bearings are spread on to the walls by steel bearing plates as shown or by concrete templates built into the brickwork.

The purlin spacings shown in this exemplare are for small section corrugated sheeting. The intermediate purlins impose a point load on the rafters and, therefore, induce bending stresses. Since, however, the roof covering is light these stresses will be small and it is more economic to allow for them in the size of the rafters rather than to form hodes at these points by extra bracing members.

When self-supporting coverings such as these sheets are used they are laid directly on the purlins as in this example, but when the roofing requires a base such as battens, boarding or other roof decking needing support at closer intervals it is then cheaper to support the base on common rafters at the required spacings carried in the traditional way on purlins at the node positions only. This usually results in less timber content than if the porlins are placed at very close intervals.

When loading and span conditions require thicker members and where lapped joints do not provide sufficient nailing area, single thickness construction with gussets throughout may be used. By this means larger areas are available for nailing and all joints may be laid out on the 'centre line' principle.

(2) BOLTED AND CONNECTORED TRUSSES

Timber connectors are metal rings or toothed plates used to increase the efficiency of bolted joints. They are embedded half in each of the adjecent members and transmit load from one to the other. There are many different types, of which the most commonly used for li_ght structures is the toothed plate connector, a mild steel plate cut and stamped to form triangular teeth projecting on each side which embed in the surfaces of the members on tightening the bolt which passes through the joint. For greater loads split ring connectors are used, but these require accurately cut grooves to be formed in each piece of timber.

Jointing by connectors and bolts permits thicker timber to be used and its application is illustrated in the figure. This truss is for a span of 7.6o m and is designed to be spaced at 3.9o m centres and to carry large section corrugated asbestos cement sheeting, which is self-supporting over a span of 1.4o m and a ceiling.

Rafters and horizontal tie are of double members with single member secondary ties sandwiched between. Struts are of double members placed on the outside of rafters and tie. This arrangement permits 'center line' setting out at all joints where three members meet. It also permits a single bolt to effect the joint.

Gussets are required at feet and ridge, firstly because the main members do not overlap and, secondly, in order to obtain a greater fixing area for the number of bolts required at these joints.

(2) BOLTED and CONNECTORED TRUSSES

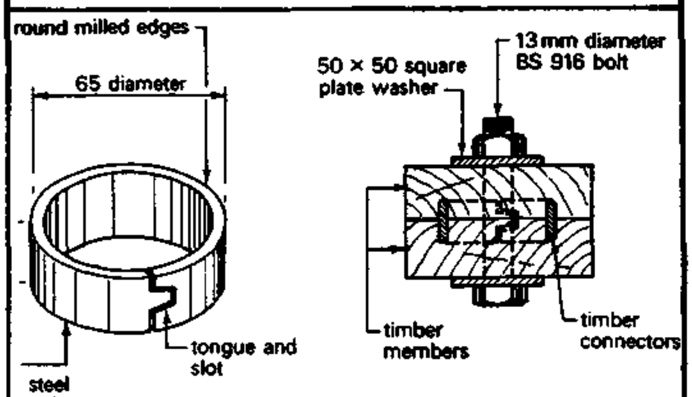

Parallel side split ring connector

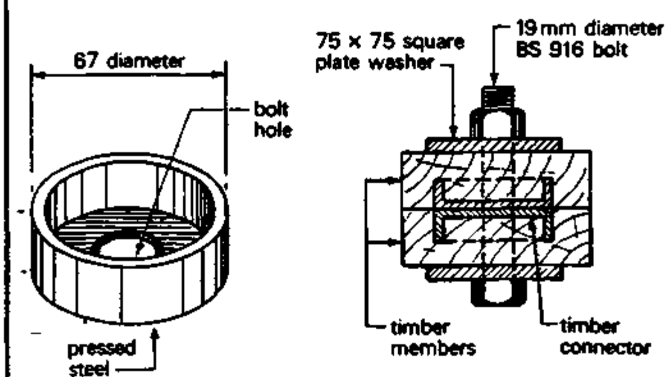

Shear plate connectors

BOLTED and CONNECTORED TRUSSES

Since only one bolt is required at the foot of the rafter the gusset here need be no deeper than the tie, with a packing piece of the same size in the central space. To avoid the use of very long timbers the members of the main tie are joined or spliced at the centre using a central splice plate and four sets of bolts and connectors.

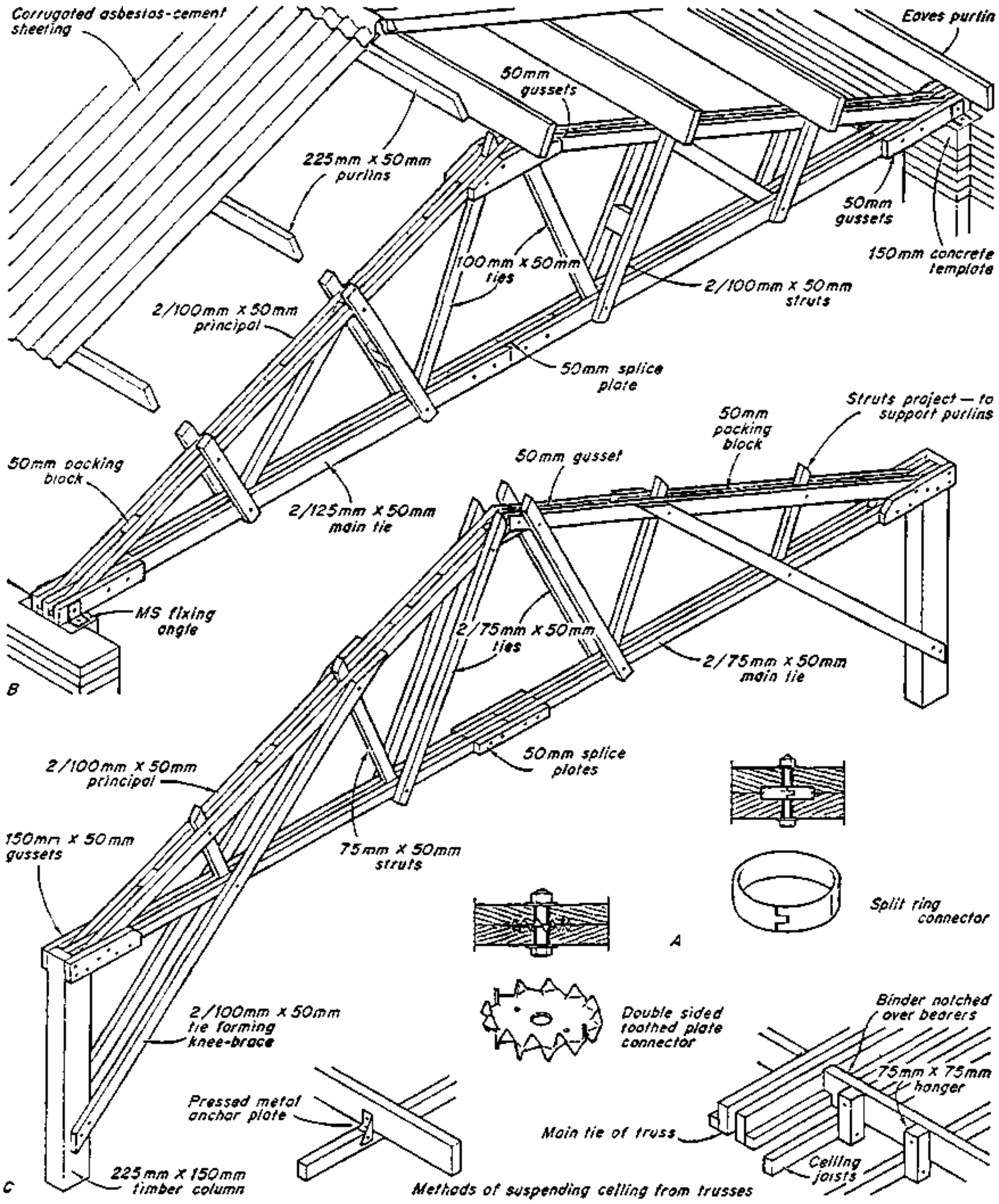

BOLTED and CONNECTORED TRUSSES

The joints in this truss are made with split ring connectors at each interface on 13 mm diameter bolts, with 5o mm square washers under bolt head and nut to prevent them sinking into the wood when the nuts are tightened. The projecting ends of struts and ties are necessary in order to obtain the minimum end distances beyond the connectors. It will be noted that the double members in the rafters and the long struts, which are compression members, are stiffened between the node points by 50 mm packing blocks securely spiked in position.

A variation of this type of truss is shown. This ist designed to be supported by columns the connection with which is stiffened against lateral movement by the triangulated and, therefore, stiff junction created by a knee-brace joining truss and column head. This is formed by extending the lower secondary tie to connect with the column some distance below the truss bearing thus rigidly uniting the two. In order to obtain a satisfactory junction with the column and to provide the necessary cross-sectional area for the knee-brace the secondary ties in this example are

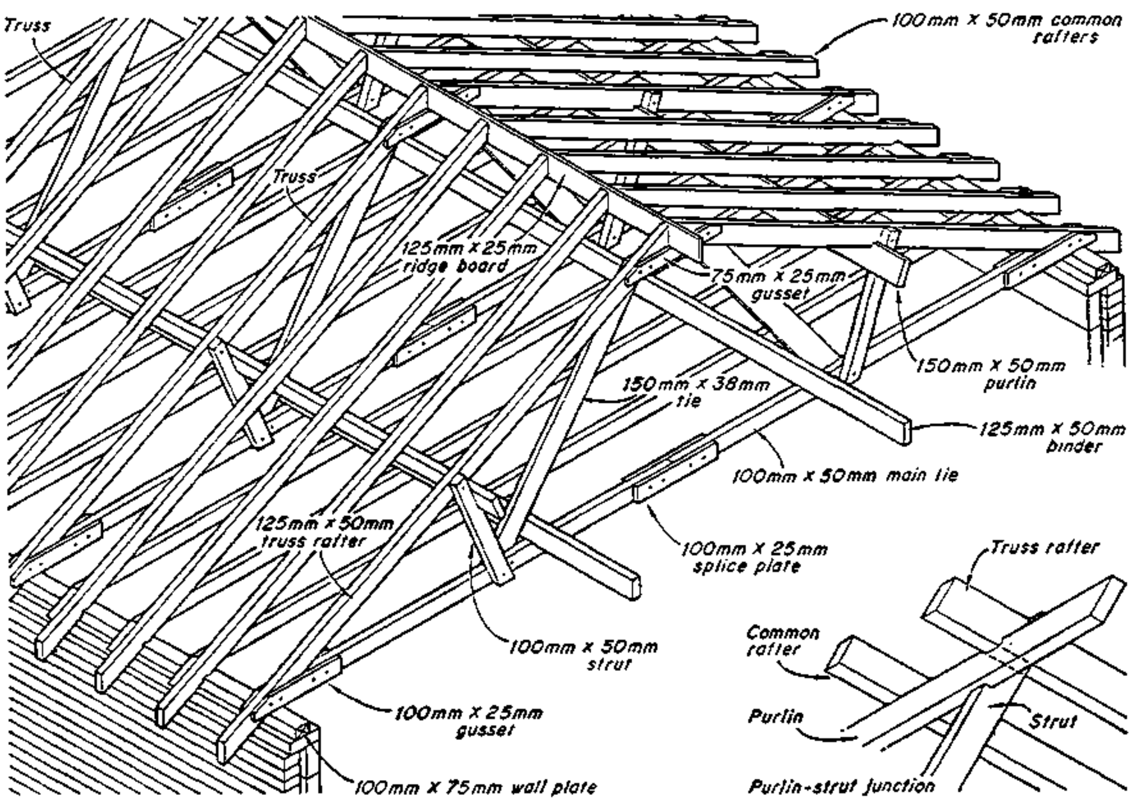

made of double members placed on the outside faces of the truss, and the struts are single members. As this truss is not designed to take a ceiling load the struts and ties are smaller, except those forming the knee-braces which must resist wind stresses. To provide for the grater number of bolts required at the feet, due to wind loads transferred to the truss, larger gussets are necessary at these points. A single central gusset is provided at the ridge which also acts as a packing between the rafter members.

The two previous examples of bolted and connectored trusses are designed for self-supporting sheet coverings. Tiles, slates and similar coverings commonly used in domestic work require a substructure of battens supported by common rafters at 400 mm to 450 mm centres. A form of connectored truss for this type of work developed by the Timber Research and Development Association is illustrated and is essentially a pair of framed common rafters thus eliminating the need for separate principal rafters. The rafters of the truss therefore lie in the same plane as the adjacent rafters and the purlins, as a result of this, lie below the truss rafters and not on their backs as in a normal truss.

BOLTED and CONNECTORED TRUSSES

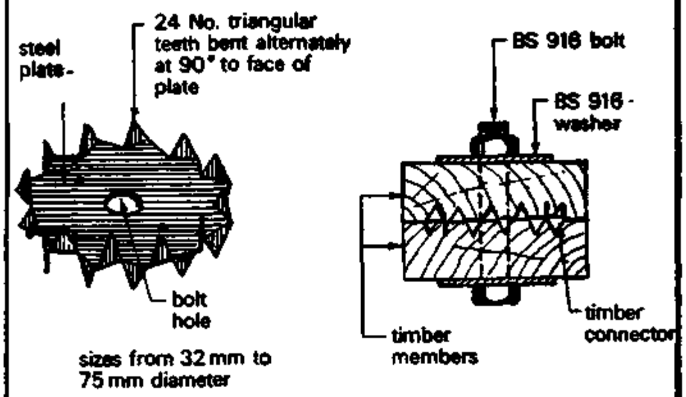

Double sided round toothed plate connectors

The truss is fabricated from single members, the joint between the rafters and main tie, which lie in the same plane, being made with gussets and the other joints by lapping the members. Binders to support the ceiling joists bear on the main tie near the lower nodes.

The trusses are designed to be placed not more than 1.8o m apart, that is at every fourth rafter where these are at 450 mm centres. The reactions at the feet are, therefore, not excessive and can be transferred adequately to the wall by the normal wall plate without a template or thickening of the wall. The example shown is for a span of 6.oo m.

(3) GLUED TRUSSES

(3) GLUED TRUSSES

Glues made from synthetic resins produce the most efficient form of joint, as strong as or even stronger than the timber joined, and many are immune to attack by dampness and decay. With this type of joint it is necessary to plane smooth all contact surfaces, and the necessary pressure during setting of the glue is provided by cramps or by bolts or nails which act as cramps. These are usually left in position.

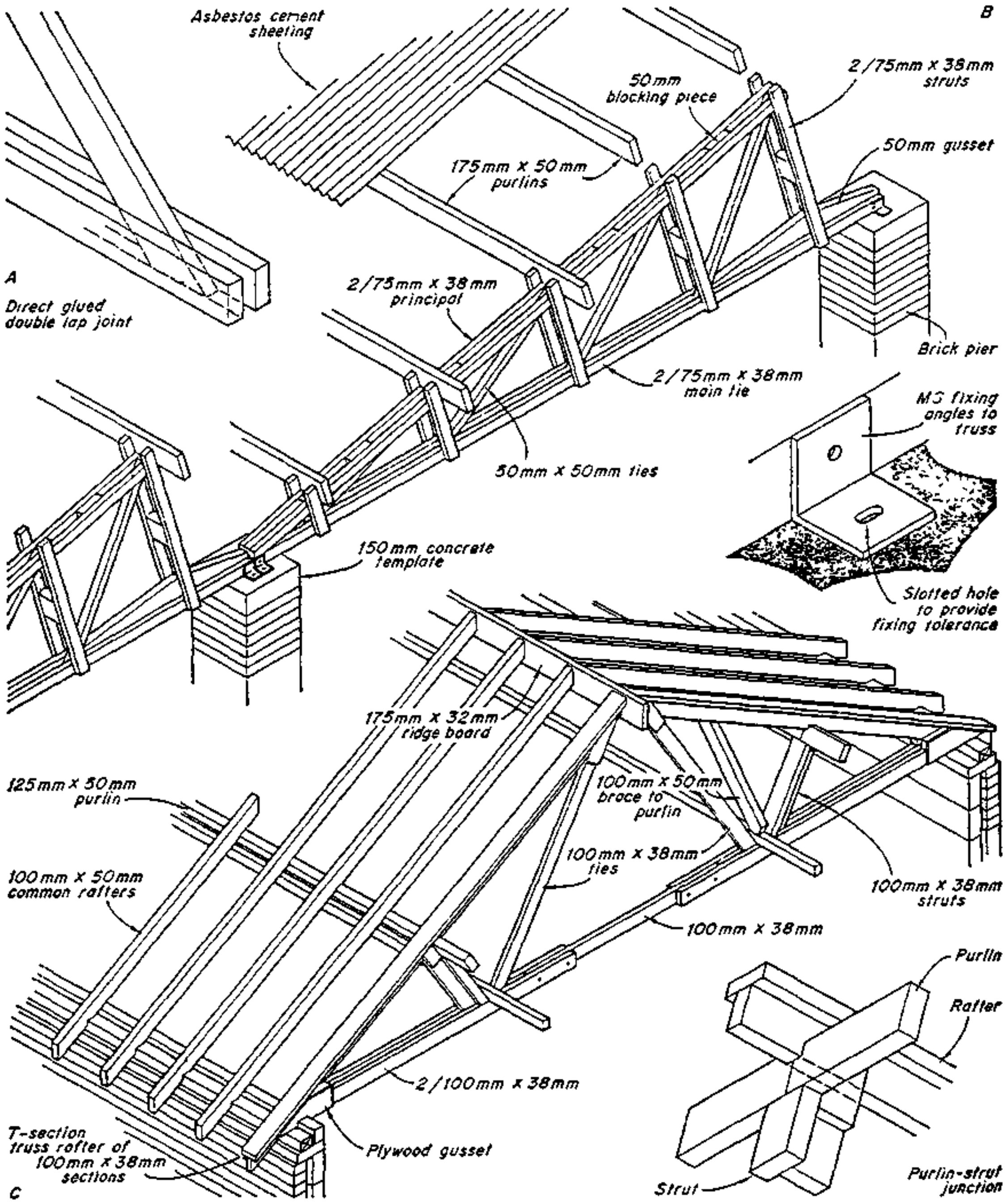

GLUED TRUSSES

The members may be glued directly to each other using lapped joints or single thickness construction may be used by the adoption of gussets. As with nailed joints, in certain cases lapped members may not provide sufficient gluing area even with double lapped joints and gussets mast then be used to provide this.

An example of direct gluing is shown in the small 'northli ght' truss of 5.2o m span in figure in which single diagonal ties are sandwiched between double rafter and main tie members and the struts are formed by two thin members glued on the outside faces of the truss. This enables 'centre line' set-out of the members to be adopted. It should be noted that the two longest struts are packed out at the middle point to give increased stiffness to these compression members. Three nails driven in prebored holes act as cramps to each joint during setting of the glue.
Gluing not only produces very strong joints which result in quite small members, but also a very rigid structure which makes the truss easy to handle in transporting and fixing.

An example of a glued and gusseted truss is shown. This is a factory made, standardised truss framed from 38 mm thick members, fabricated in two halves and requiring only site bolding of the main tie and site nailing to the ridge board. Rafters, struts and diagonal ties are single members joined by gussets, the compression members being formed into T-sections to stiffen them against buckling by the addition of 38 mm 'tables' glued and nailed on. Those to the struts form seatings for the purlins which lie below the rafters, so that the latter act also as common rafters.
The main tie is partially of double members between which struts and diagonal ties are sandwiched and secured by direct gluing. To provide greater gluing area the lapped joints between rafter feet and tie are packed out to allow the application of plywood gussets on each side.
These trusses bear on the normal wall plate and are designed to be spaced up to 3.90 m apart for spans from 4.5 m to 9.om

8. TRUSSED RAFTERS

VIII TRUSSED RAFTERS

In recent years in domestic work there has developed the practice of triangulating or trussing every pair of rafters in roofs over spans which would normally require purlin construction, thus dispensing with purlins. There are a number of reasons for this, not the least of which has been the development of factory production for this type of component and the simplicity and speed with which this form of roof can be erected. The economic value of trussing every pair of rafters rests on these considerations together with the fact that many newer forms of roof coverings permit low pitches resulting in short bracing members and the fact that the use of insulating dekking such as wood wool or compressed straw slabs, or larger tiling or slating battens, permits the rafters to be placed

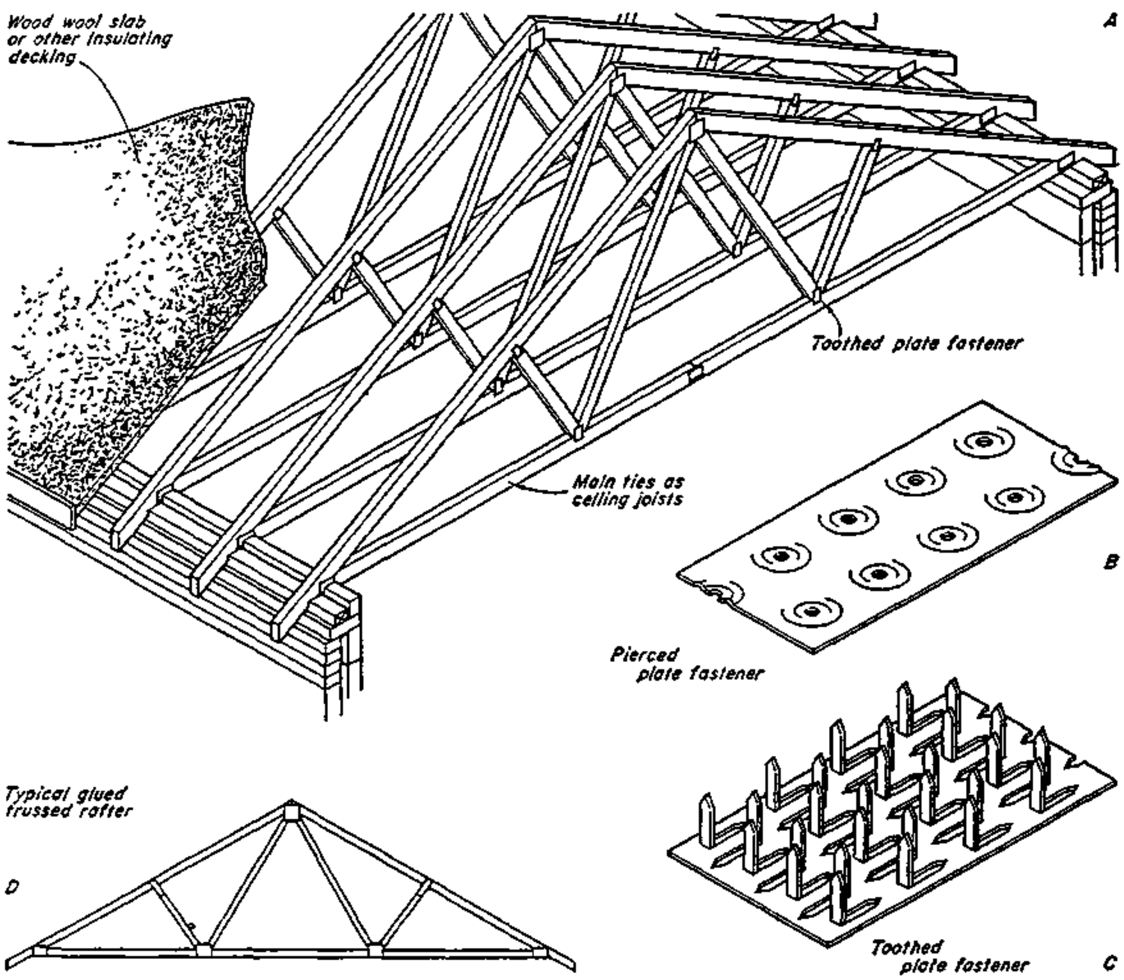

at 600 mm centres rather than the traditional 400 mm. This, together with the elimination of purlins and ridge board, reduces the timber content of the whole roof structure. These members are known as trussed rafters. It should be noted that since there are no purlins such a roof is a single roof construction.

Trussed rafters are fabricated from single thickness members jointed by gluing or nailing, using plywood or, in the case of nailing, punched metal plate gussets. Punched metal plate fasteners as they are usually called, fall into two groups.

TRUSSED RAFTERS

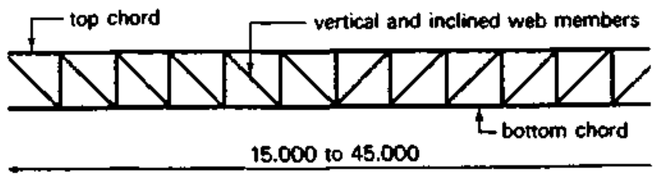

Typical 'N' or Pratt truss

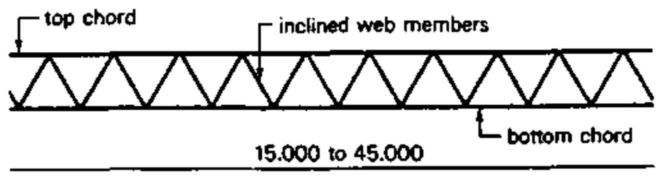

Typical Warren girder

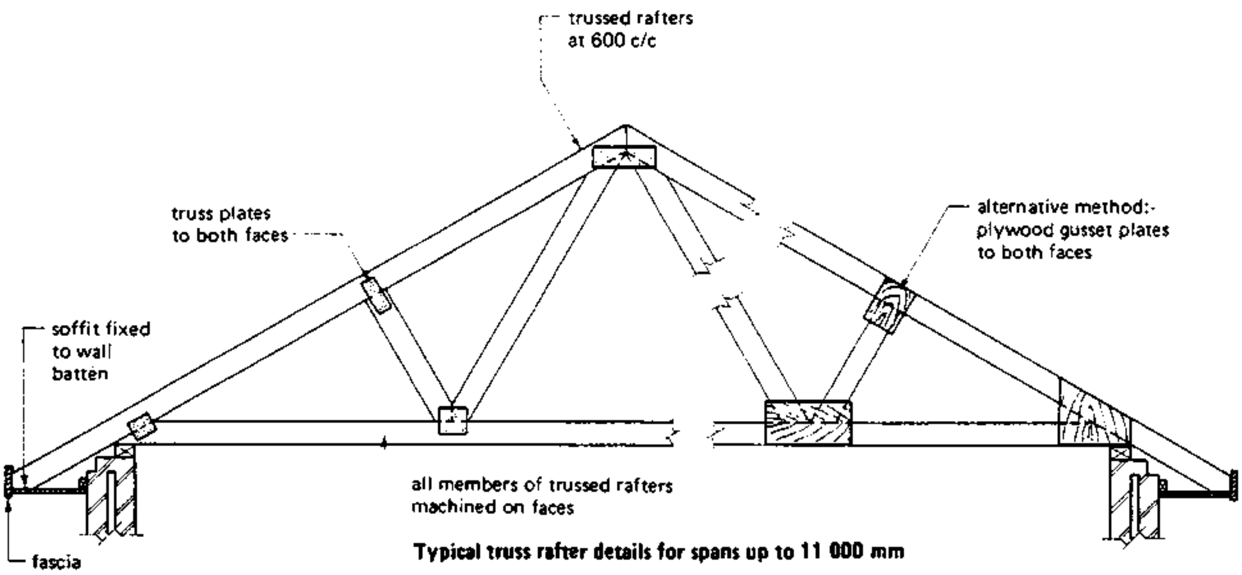

Typical truss rafter details for spans up to 11 000 mm

The use of low pitches, lightweight roof coverings and lightweight roof structures such as trussed rafters, by reducing the weight of the roof increases the danger of wind uplift and in these types of roof the necessity of adequate auchorages should be considered.

TRUSSED RAFTERS

Firstly, a thin - gauge plate with holes punched regularly over its surface to receive nails, called a pierced plate fastener. Secondly a similar plate with teeth punched from the plate and bent over 90 degrees, called a toothed plate fastener, or connector. The latter, in which the teeth are an integral part of the plate, must be driven in by a hydraulic press or roller and are used in factory production since they are not suitable for site fabrication. The essential difference between a TRUSSED RAFTER and a ROOF TRUSS is that the former carries its own propartion of roof load directly on itself and only that load, wherease a truss carries the loads from a number of adjacent rafters via the purlins.

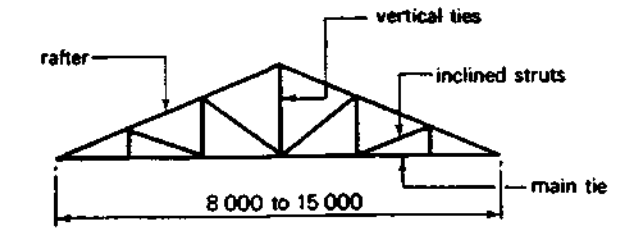

Typical Howe truss

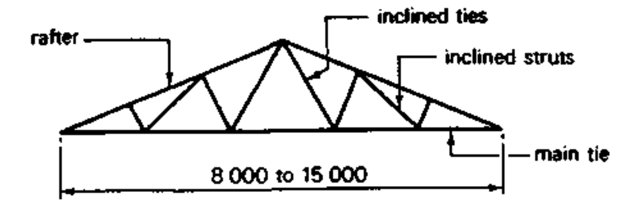

Typical Fink or Belgian truss

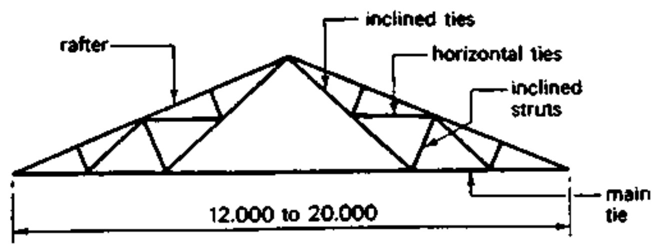

Typical French truss

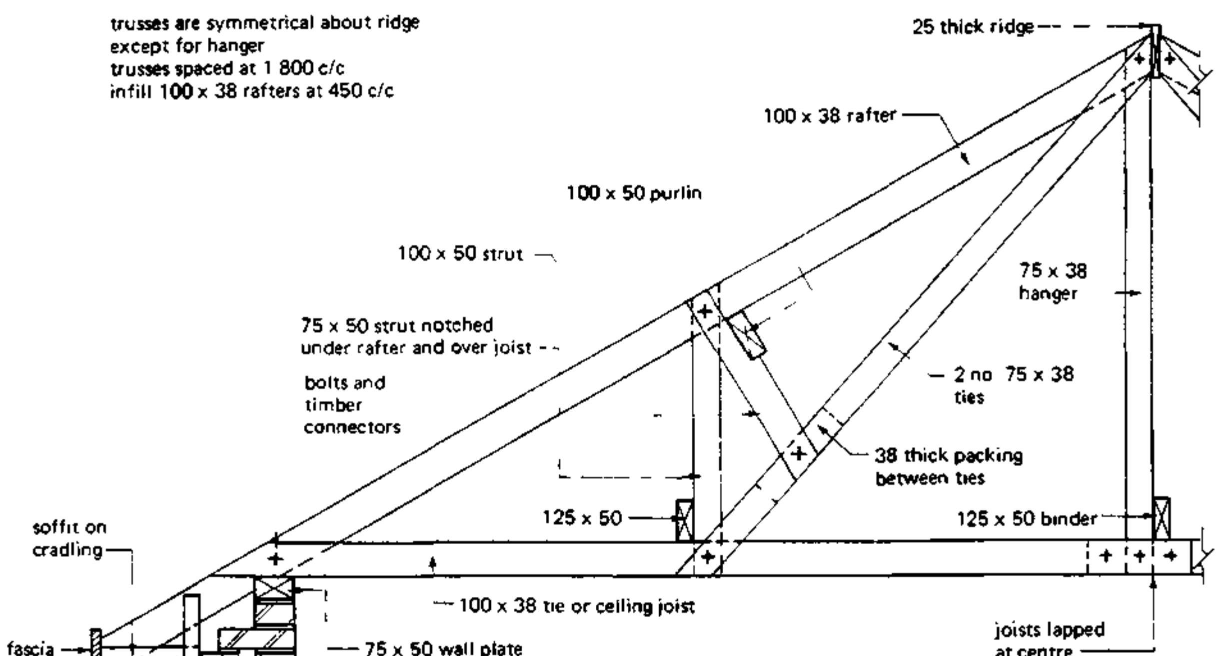

Typical truss detail for spans up to 8 000 mm

9.ROOFS
compiled. D.VOLKE
OCT. '79

PITCHED ROOFS

BUILDING CONSTR.
LECTURE
CET 5031/19.441

TCA TECHNICAL COLLEGE ARUSHA
CHUO CHA UFUNDI ARUSHA

CIVIL ENGINEER.
DEPARTMENT

HIPPED ROOFS

IX HIPPED ROOFS

A Hipped Roof is more complicated in its construction than a Gable Roof, necessiating SPLAY and SKEW cutting of all the shortened rafters at the intersections (called JACK RAFTERS) and the provision of a deep HIP RAFTER running from ridge

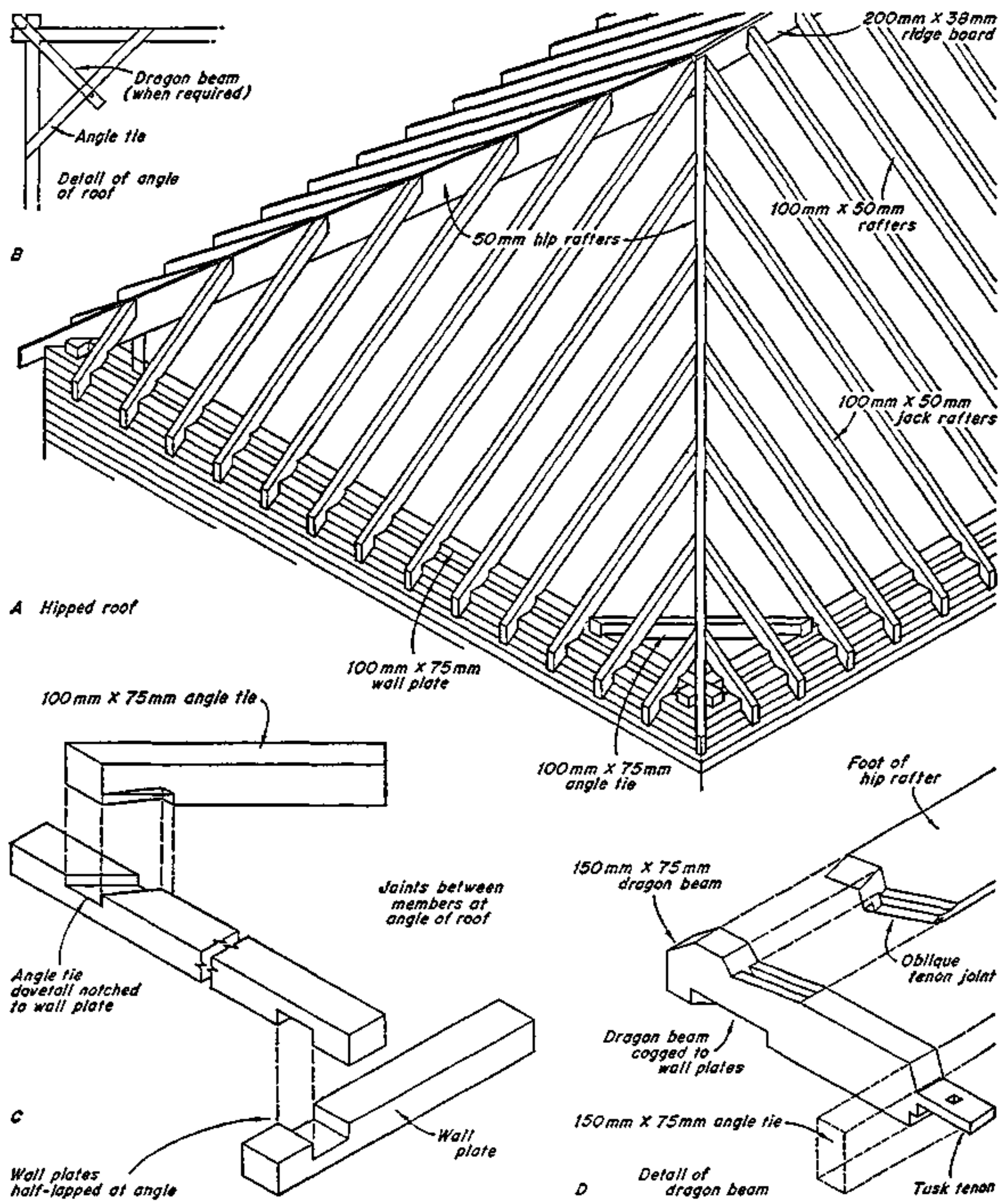

HIPPED ROOFS

to wall plate to carry their top ends (see fig.). The hip rafter transfers their loads to the wall plate and will, therefore, be 225 mm to 28o mm deep, depending upon its span and the depth of the rafters, and 38 mm to 5o mm thick. If the roof has purlins their ends will also be carried by the hip rafters which may then need to be 75 mm thick.

The tendency of the inclined thrust of the hip rafter to push out the walls at the quoin is overcome by tying together the two wall plates on which it bears by an angle tie dove-tail notched or bolted to the plates (fig.). The foot of the hip rafter ist notched over the wall plates which are half-lapped to each other. If the rafter carries purlins causing a greater thrust more resistance to this is provided by the introduction of a dragon-beam as shown in the fig. linking the ends of the wall plates to the angle tie, which would be larger in size. The dragon-beam is cogged over the plates and tusk-tenoned to the tie. A dragon-beam will in any case be necessary to provide a bearing for the hip rafter when the eaves are sprocketed and the feet of the rafters terminate on the wall plate.

VALLEY

9.44 VALLEY

when the plan shape of the building breaks out or returns the intersection of the roof surfaces results in a junction having an external angle less than 180 degrees which is called a valley (the hip has an external angle greater than 180 degrees) As at a hip jack rafters occur. These run from ridge to valley and their feet are nailed to deep valley rafters the function and size of which are the same as those of the hip rafters

If returns and projections produce roof spans equal to that of the main roof the valley rafters will extend to the ridge where they will gain support as in. If, however, a projection is less in span the valleys will not meet the main ridge, and a support to the tops of the valley rafters and the lower ridge board must be provided in the roof space. If the width of the projection is small valley rafters may be omitted and all the rafters of the main roof be carried down full length on to a suitable bearing with boards laid on them to take the end of the ridge board and the feet of the jack rafters to the projection.

A valley is finished with a triangular timber fillet or a valley board, as shown in the fig. depending on the width required by the nature of the junction between the roof covering on the two slopes.

It will be seen that the plan shape greatly affects the roof construction and when designing a building which is to be covered with a pitched roof the implications of the plan in this respect must be borne in mind. The simple rectangular plan results in simple and relatively cheap roof construction; one in which breaks and returns accur, especially if they are numerous, may result in most expensive construction. This applies not only to the structure itself but also to the roof covereing

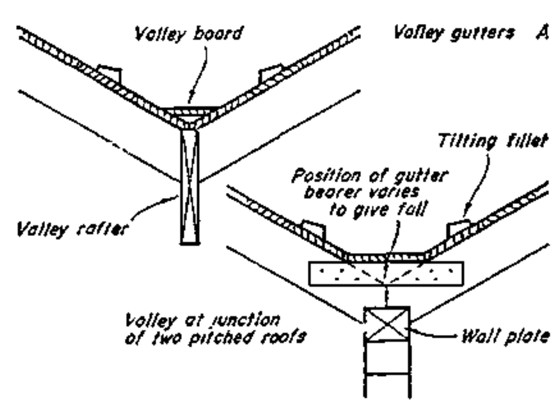

EAVES TREATMENT

As with a monopitch roof, unless the roof is set behind a parapet. the eaves of a ridge roof may finish flush with or may project beyond the wall face, the former producing some economy in roof covering and timber, the latter providing some protection to the walls. Detailing of construction varies widely according to the pitch of the roof, the effect desired by the architect and whether an external or a hidden gutter is used. It is, therefore, possible to illustrate only some typical examples.

Examples of open projecting caves are shown in the figeres. With tile or slate coverings of any type the fascia projects as shown 19 mm oder so above the roofing battens in order to tilt the caves courses. Where no fascia is used as at a batten of greater depth than the boarding or battens, called a tilting - fillet, is used at this point. Also closed projecting eaves are shown in the figure. The variation in detailing necessiated by increased projection can be seen. The ends of the rafters are cut horizontally to provide some fixing for the soffit boards (C), but as a considerable portion of the boarding is not supported by the rafter, soffit bearers are fixed to the rafter ends as shown.

The back of the fascia should be grooved to take the edge of the soffit. Greater projections necessitat longer soffit bearers and brackets are then required to support heir inner ends as shown in (D). When plywood or asbestos cement sheet is used for the soffit, as is quite common, the fascia must be grooved to take the front edge and the back edge should be given continuous support by a fillet secured to the wall (E). In this case the soffit bearers can be fixed to this rather than to brackets from the rafters. If the roof pitch is not too great the soffit can be fixed direct to the rafters and, with a gable roof and projecting barge board, can continue up as the verge soffit. In this particular case the barge-board will be slightly less in depth than the fascia, but with a horizontal eaves soffit it must be deeper in order to cover the end of the eaves, in which case the outer and cantilever rafters which support it must be deeper than the common rafters or a thicker bargeboard must be used.

EAVES TREATMENT

If a clear fascia, unobstructed by an external gutter, is desired an internal gutter may be formed. It is essential that the front edge of this type of gutter be at such a level that in the event of blockage of the outlet water will drain over the front rather than seep back into the roof structure and possibly into the building.

Roof ventilation should be ensured through closed eaves.

When a gable roof finishes with a plain verge, that is with no barge-board, the end of any form of closed projecting eaves must be boxed-in or be closed by the gable wall supported either on corbelling or on a springer. If the gable continues up as a parapet this is usually corbelled out for this purpose.

On wide, steeply pitched roofs the pitch may be reduced at the eaves in order to reduce the velocity of water during heavy rainfall and prevent overshooting of the gutter. This is done by means of sprockets which are short lengths of timber the same size as the rafters, fixed to the sides of the rafter feet as shown in figure   or to the backs of the rafters if the latter run over the wall plate.

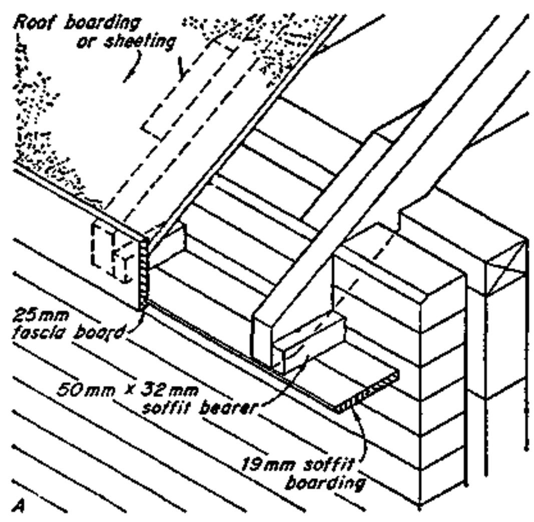

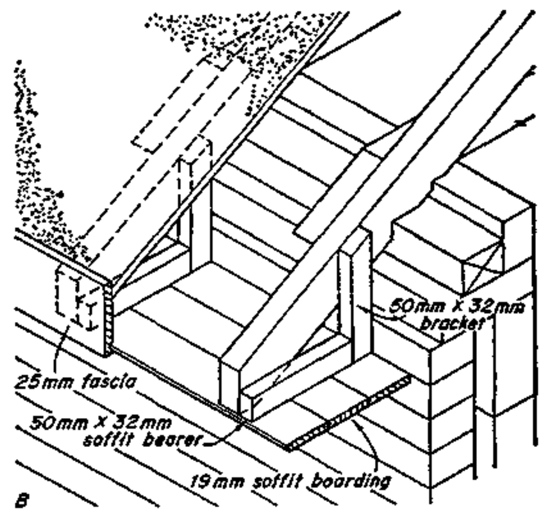

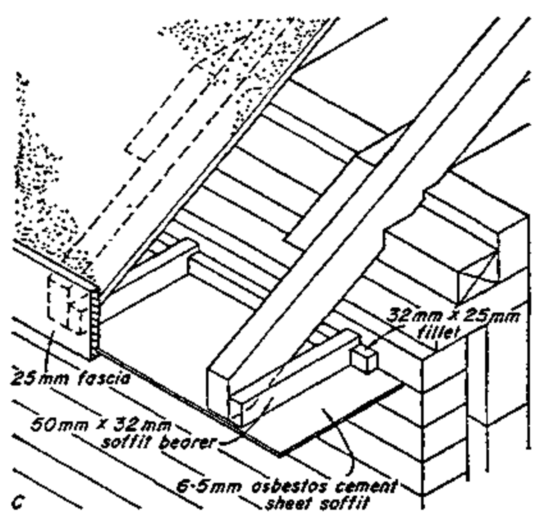

EAVES TREATMENT

The reduced pitch must, of course, not be less than the minimum angle necessary for the particular roof covering.

As an alternative to framing up a projecting eaves in the ways described above proprietary precast concrete eaves or gutter units may be used as for flat roofs, bedded on the head of the external walls. The shape of the unit spreads the roof load over both leaves of a cavity wall and over openings of limited span a back recess may be filled with concrete, together with reinforcing bars, to form a lintel. Behind a parapet wall a parapet gutter is framed up as shown in the figure by means of gutter bearers nailed to the rafters and carrying the gutter boards. The bearers are fixed at different levels along the wall to produce a fall to the gutter and as the level rises up the roof slope this results in a gutter which tapers in width on plan from a maximum at the highest point and is, therefore, termed a tapered gutter in contrast to the parallel or box gutter.

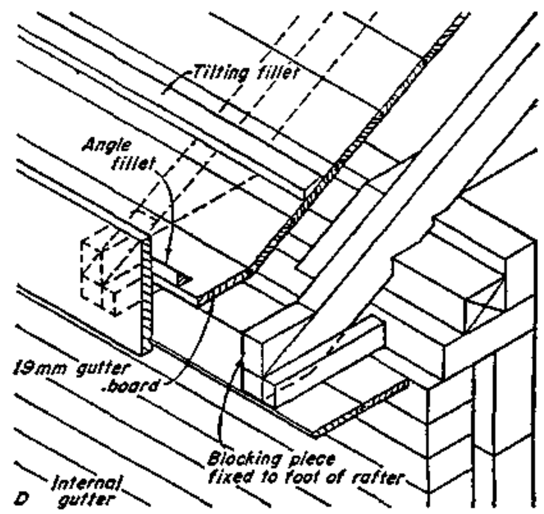

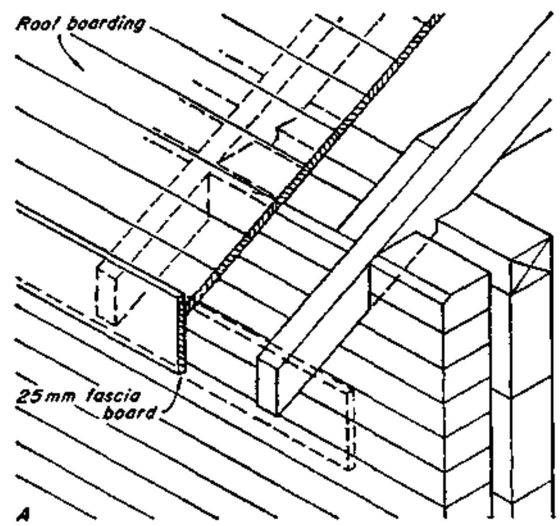

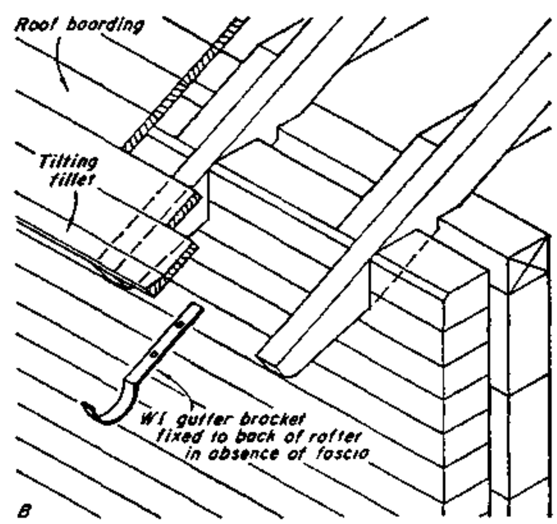

9.46 OPENINGS IN TIMBER ROOFS

OPENINGS IN TIMBER ROOFS

Roofs may be penetrated by chimney stacks and various forms of roof lights and, in pitched roofs, by dormer windows, for all of which openings in the roof must be formed. As in the case of floors and in a similar manner the roof is framed or trimmed to form such openings. Details of trimming to flat roofs are normally identical with those for floors.
In pitched roofs openings may be required at any point between eaves and ridge, or at the ridge, as shown in the figure. For stacks and skylights the trimmers are placed normal to the roof slope and are fixed to the trimming rafters by pinned tenons. This joint has an extended tenon and is secured with a wedge. The trimmed rafters are fixed to the trimmers by any of the methods described for floors.

Openings for roof lights are finished with a timber upstand or CURB as indicated in the figute which in a pitched roof, raises the light above the level of the roof covering and permits a watertight junction to be formed all round, and in a flat roof provides for a 150 mm upturn of the roof finish.

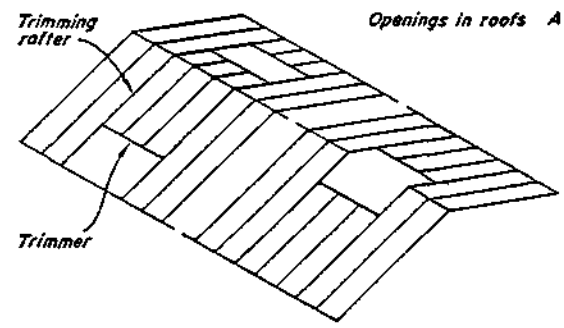

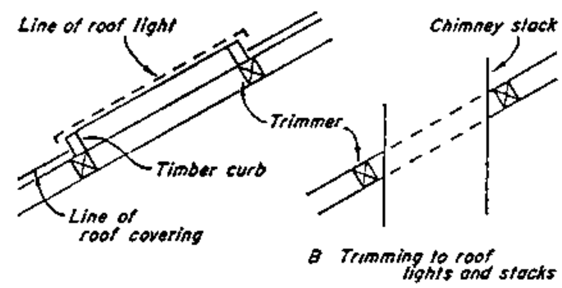

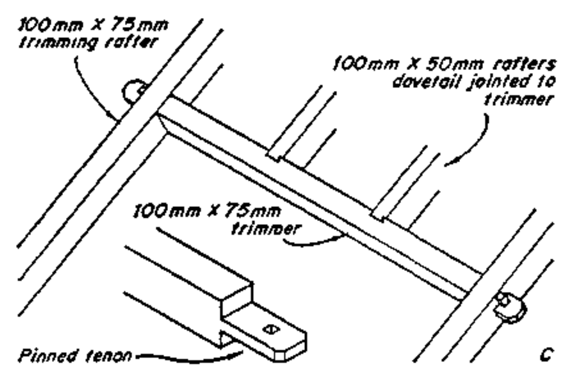

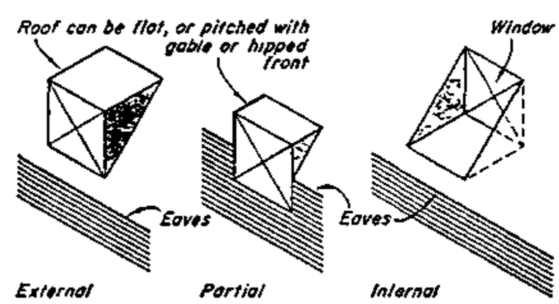

DORMER WINDOWS

The positioning of trimmers for dormer windows varies according to framing requirements and is descussed below.

DORMER WINDOWS

The dormer window is a vertical window set in the slope of a roof as distinct from a skylight which is parallel to the slope. It may take various forms as shown in the figure. The internal dormer which avoids a projection above the roof slope is less common and involves a small flat roofed area in front of the window.

For external dormer windows the lower or cill trimmer is fixed vertically to provide a seating for the dormer framework and window and to raise the window cill clear of the roof covering. It is 75 mm or 100 mm wide and its depth will vary with the roof pitch and the tape of roof covering. The top or head trimmer may be fixed vertically or normal to the slope. If the dor-

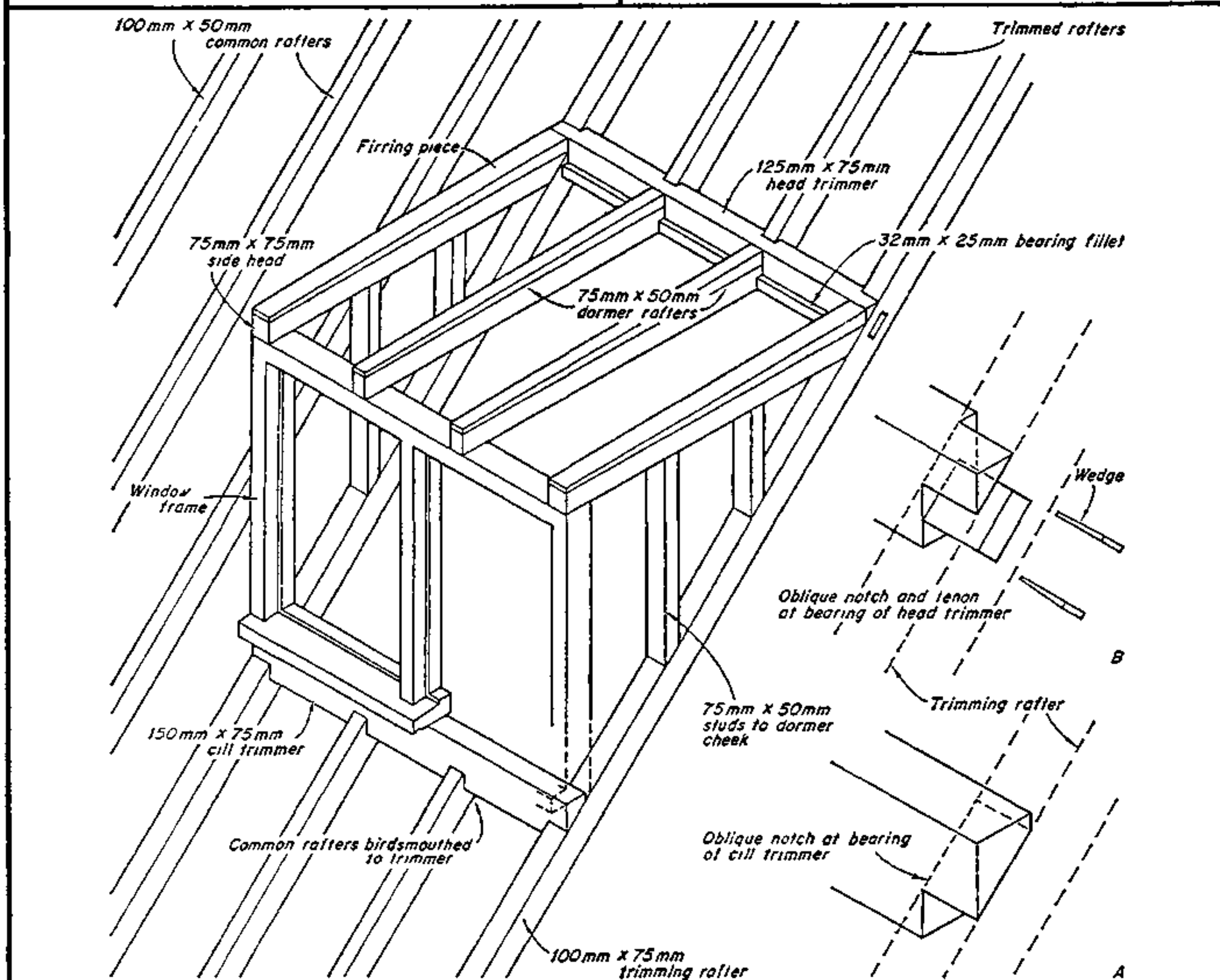

9 ROOFS
compiled: D.VOLKE
OCT. '79

PITCHED ROOFS

BUILDING CONSTR.
LECTURE
CET 5031/19.449

TCA TECHNICAL COLLEGE ARUSHA
CHUO CHA UFUNDI ARUSHA

CIVIL ENGINEER.
DEPARTMENT

mer roof is flat a vertical trimmer provides a fixing surface for the boarding or other decking; if it is pitched a trimmer normal to the slope may be used and this simplifies jointing to the trimming rafters. The sill trimmer is oblique notched over the trimming rafters and nailed in position.
The vertical head trimmer is oblique notched and tenoned to them, the tenon being necessary here in order to resist the thrust from the feet of the upper trimmed rafters. In the case of a partial dormer there is no sill trimmer since the window sits directly on the wall below.

The traditional method of forming the dormer front was to frame up 100 mm by 75 mm side posts and head on the cill trimmer, the posts being tenoned or dowelled to the trimmer, and within this to set the window. Nowadays, unless the dormer is large, it is usual to make the head and mullions of the window frame large enough to act structurally to support the dormer roof and cheeks as shown in the figure. The cheecks are formed by a 75 mm x 75 mm side head running from the dormer front back to the trimming rafter against which it is splay

DORMER WINDOWS

cut and nailed, the spandrels thus formed being filled with 75 mm x 50 mm studs to which 19 mm t and g boarding is fixed externally. If the cheek is small studs can be omitted, the spandrel being covered with 25 mm boarding nailed to corner post and side head, running parallel with the roof slope.
The framing of an internal dormer varies slightly from this. The lower trimmer would be set vertically to form a front bearing for the flat roof below the window and the top trimmer set similarly to form a head over the window. Since neither may be notched over the trimming rafters, in order not to obstruct the roof covering, both must be tenoned into them. Two posts under the bearings of the top trimmer and running from floor to trimming rafters would support a cross bearer carrying the window and the members forming the flat roof.

9.5 ROOF COVERINGS

9.51 FUNCTION OF ROOF COVERINGS

ROOF COVERINGS

The function of the Roof Covering is that of a 'SKIN' - protection against weather.
In addition to that function the Roof covering has to be fire resistant and has to provide an adequate thermal insulation.

9.52 TYPES OF ROOF COVERINGS

In accordance with the structure of the roof and the above mentioned functions there are different types of Roof Coverings.
A broad classification, comprising 5 groups, is:

1 Roof sealing
2 Table covering
3 Sheet covering
4 Scalloped covering
5 Thatch covering

Depending on the SLOPE of the roof the type of Roof Covering has to be choosen. The above mentioned types of Roof coverings are comprising the following material:

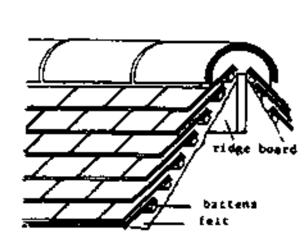

(5) Plain tile roof

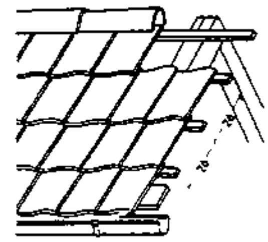
(6) Pantile roof (clay) 43 kg/m²

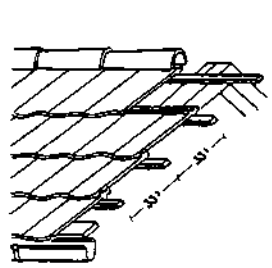
(7) Interlocking tile roof 42 kg/m²

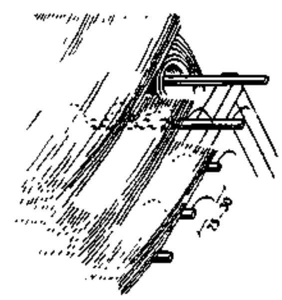
(8) Thatch roof 10 kg/m²

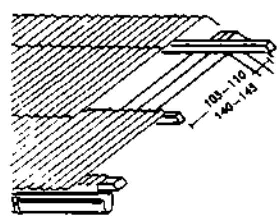
(9) Corrugated Eternit roof 17 kg/m²

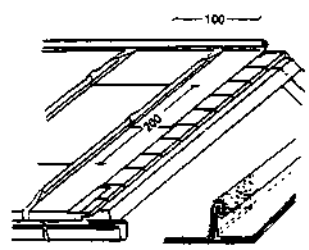

(10) Metal roof 3.5-6.5 kg/m² (aluminium 2-3 kg/m²)

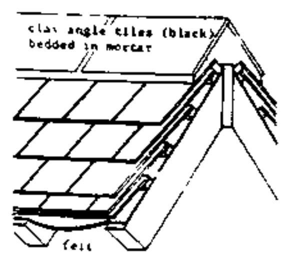

(11) Slate roof

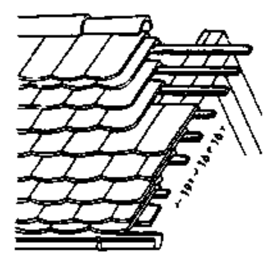
(12) Double roof ('Doppeldach') 63 kg/m²

1 Roof sealing: - heat sealed plastic foils; - roofing felts, glued in different layers, sealed with bitumious paints. - reinforced with metal fails, etc.	**ROOF SEALING**
2 Table covering: - asphaltic or bitumious felts, glued or nailed in 1,2,or 3 layers. They are colled according to the weight of the raw-materials (333 g/m^2 or 500 g/m^2). The raw-felt is soaked with tar or bitumen and coated. Sand or chippings may be pressed on the surface of the felt as protection against mechanical loads and weather.	**TABLE COVERING**
3 Sheet covering: - Sheet metal (coated or galvanized) - galvanized corrugated iron sheets - corrugated aluminium sheets - corrugated asbestos sheets.	**SHEET COVERING**
4 Scalloped coverings: - Roofing (clay) tiles - Concrete tiles - Slates - Asbestos plain tiles (in different forms and shapes) - shingles.	**SCALLOPED COVERING**
5 Thatch coverings: - straw - dry grass, or hey - reed	**THATCH COVERING**

SUBSTRUCTURES

9.53 SUBSTRUCTURES

The Roof covering - 'the SKIN' - has to have an adequate substructure and has to be fixed on it, in order to avoid sliding or being taken away by the wind.

There are different types of substructures depending on the 'SKIN', covering the roof:

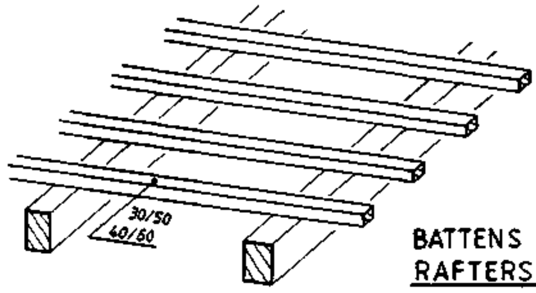

BATTENS ON RAFTERS

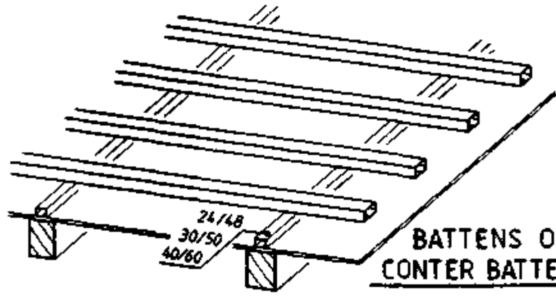

BATTENS ON CONTER BATTENS

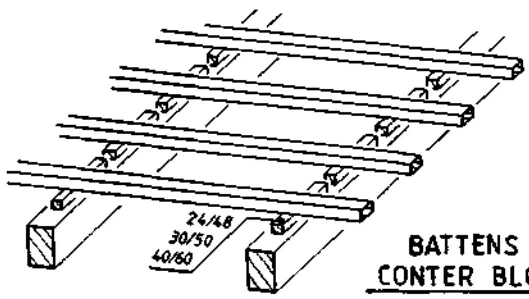

BATTENS ON CONTER BLOCKS

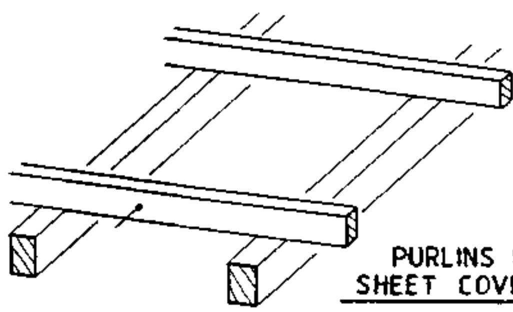

PURLINS FOR SHEET COVERINGS

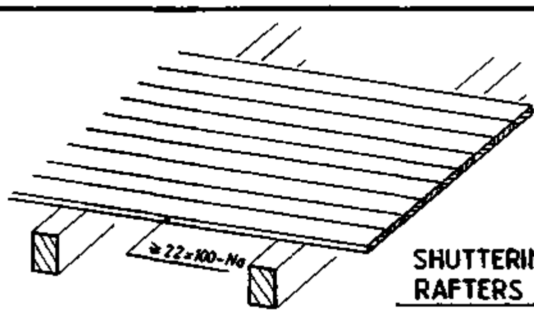

SHUTTERING ON RAFTERS

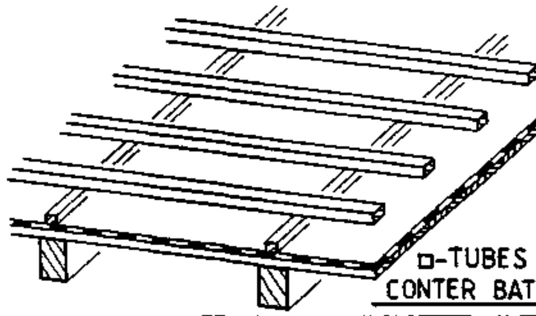

□-TUBES ON CONTER BATTENS

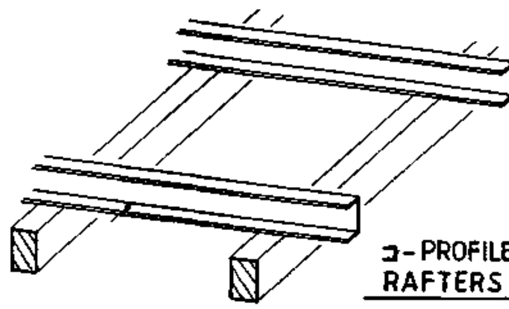

⊐-PROFILES ON RAFTERS

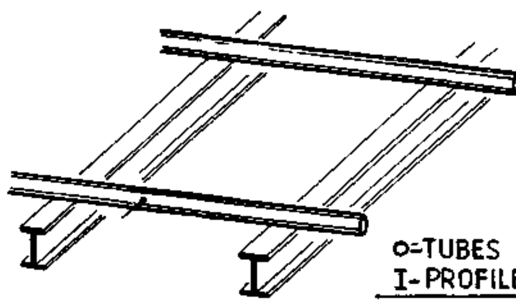

○-TUBES ON I-PROFILES

An additional provision to seal flat inclined roofs is the use of fibre-reinforced roofing felt or special plastic foils.

- The overlapp of such materials to be ~ 15 cm
- In order to get a proper cross-ventilation the material should hang loose between the fieleds of the battens.

9.54 CHOICE OF ROOF COVERINGS

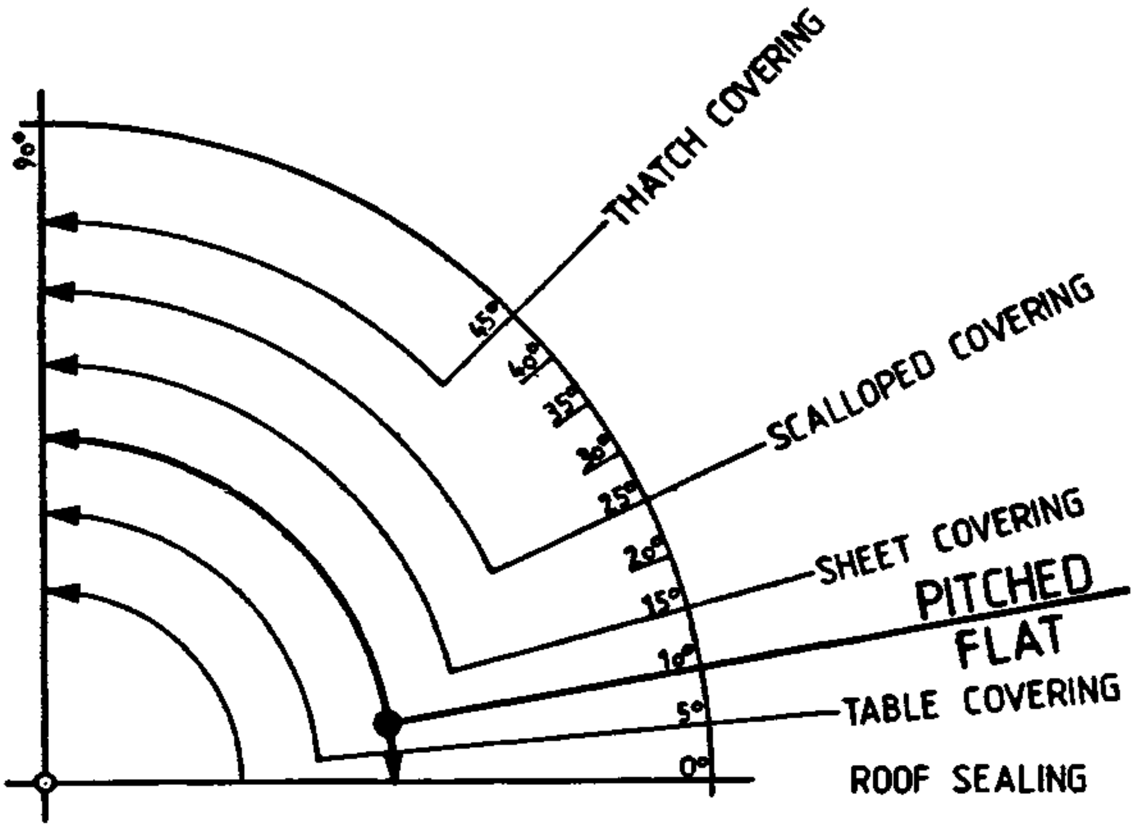

9.55 MATERIALS AND COVERING METHODS

- TABLE COVERING :

  ASPHALTIC OR BITUMIOUS FELTS,
  GLUED OR NAILED IN
  1-, 2-, OR 3-LAYERS

1-LAYER TABLE COVERING

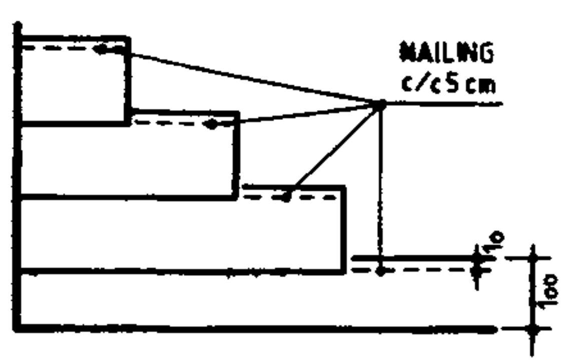

9. ROOFS	ROOF COVERINGS	BUILDING CONSTR.
compiled : D.VOLKE		LECTURE
OCT. '79		CET 5031/19.554

TABLE COVERING

2-LAYER TABLE COVERING

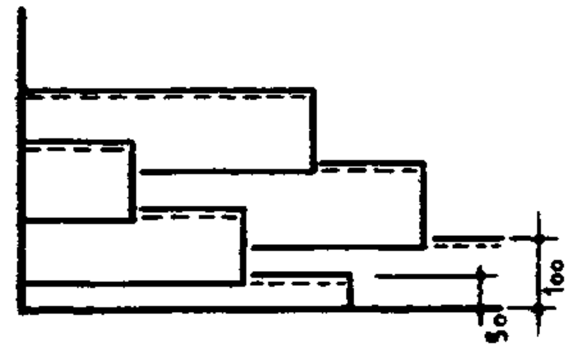

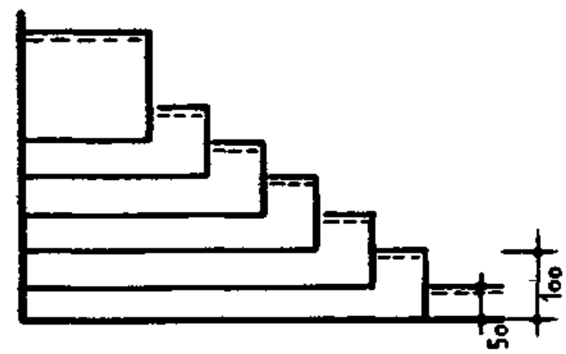

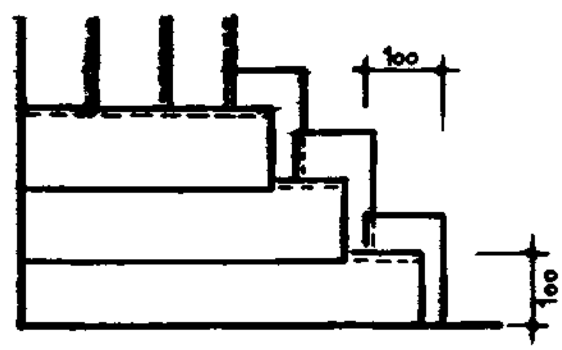

3-LAYER TABLE COVERING

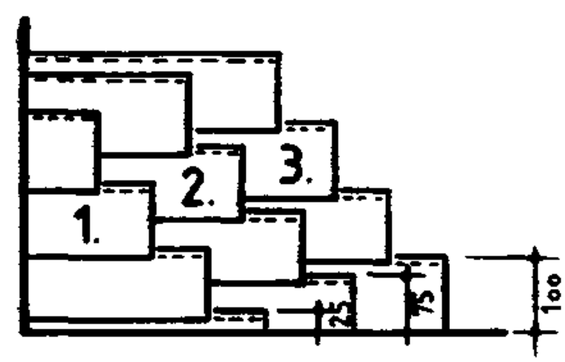

○ SHEET COVERINGS :

SHEET METAL COVERINGS

- Sheet metal coverings provide an excellent protection against wind and rain, is durable and lighter in weight than tiles, slates or asphalts.

Metal roofs are noisy.

Four types of metals are used for sheet coverings:

1 Lead
2 Copper
3 Zinc
4 Aluminium

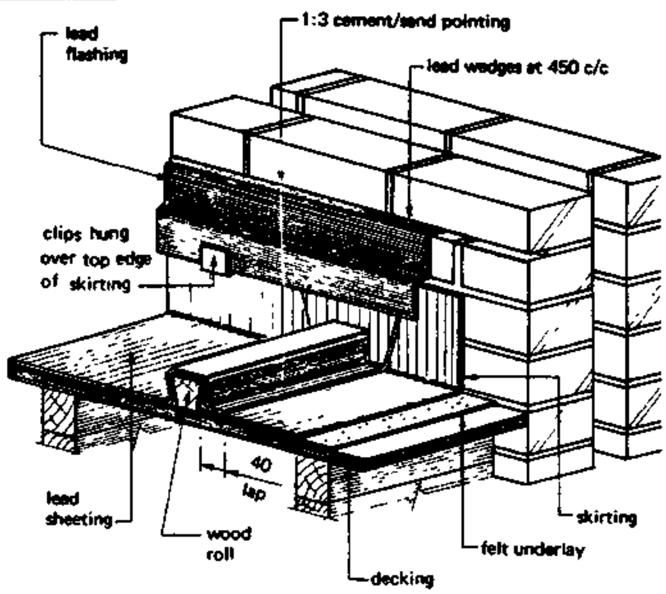

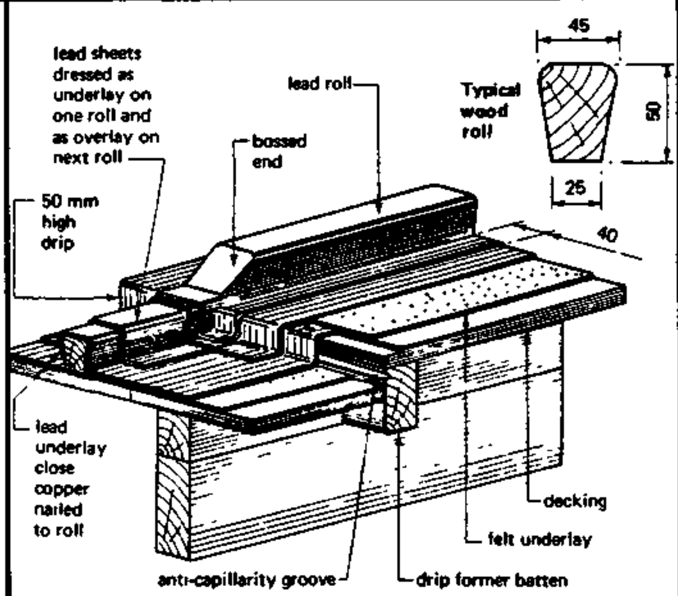

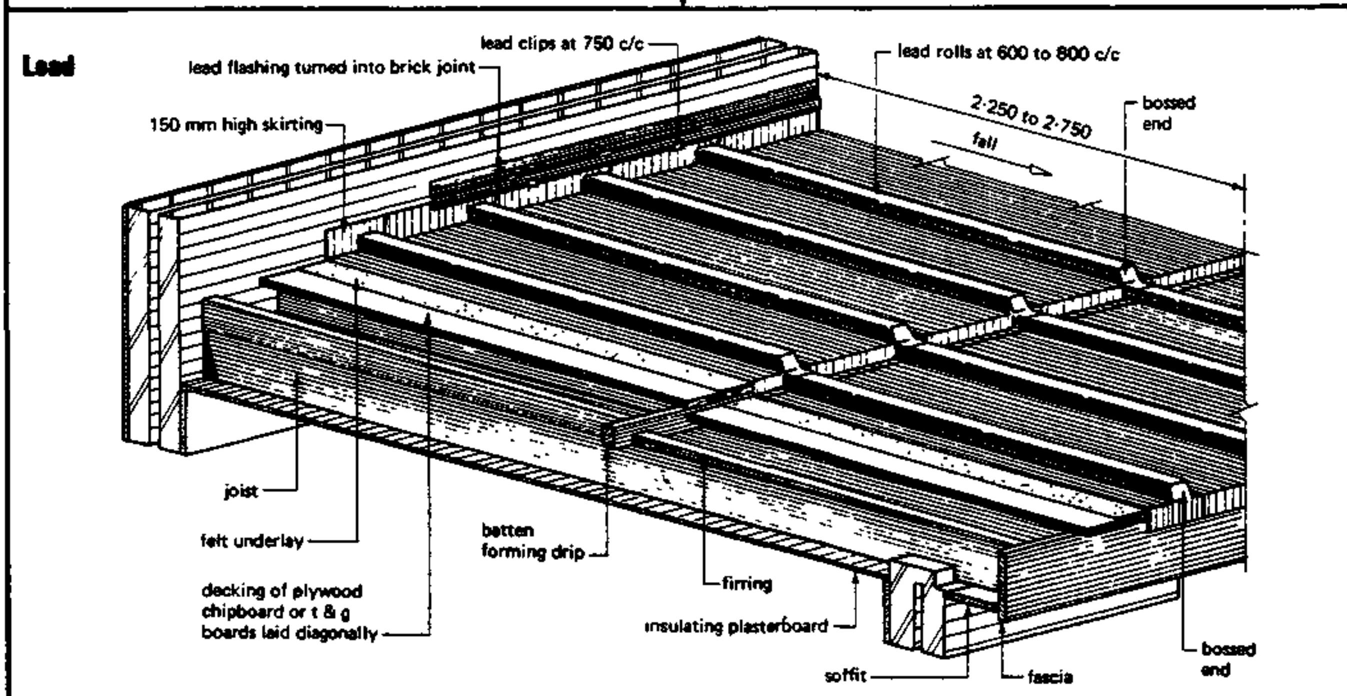

SHEET COVERING

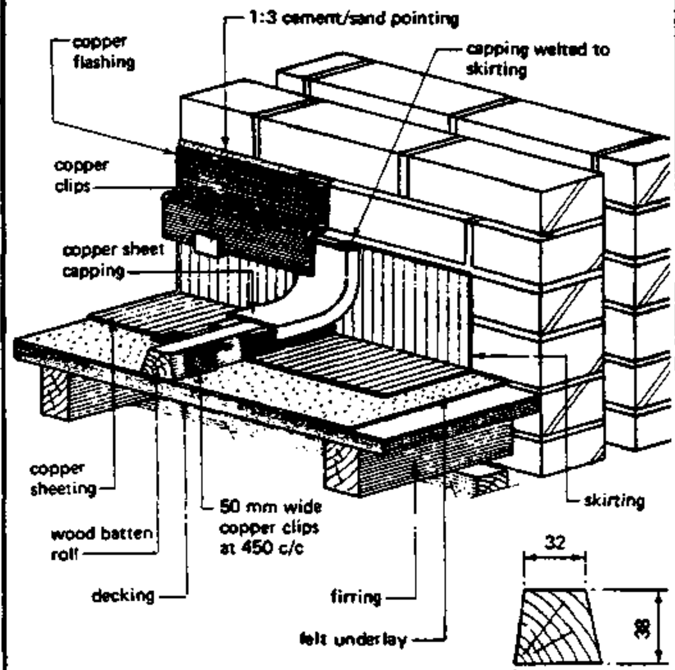

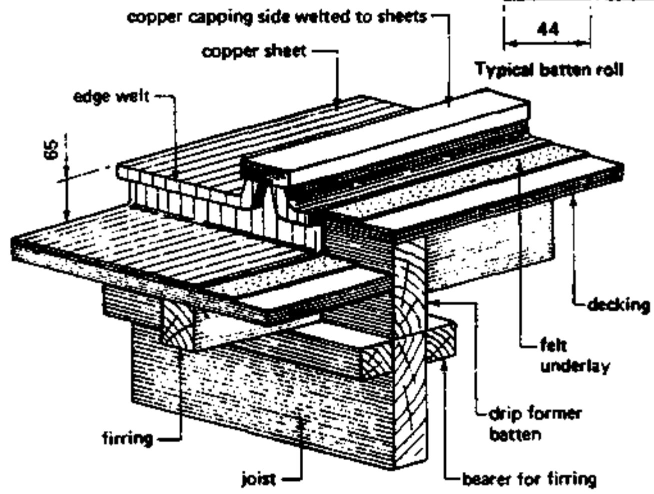

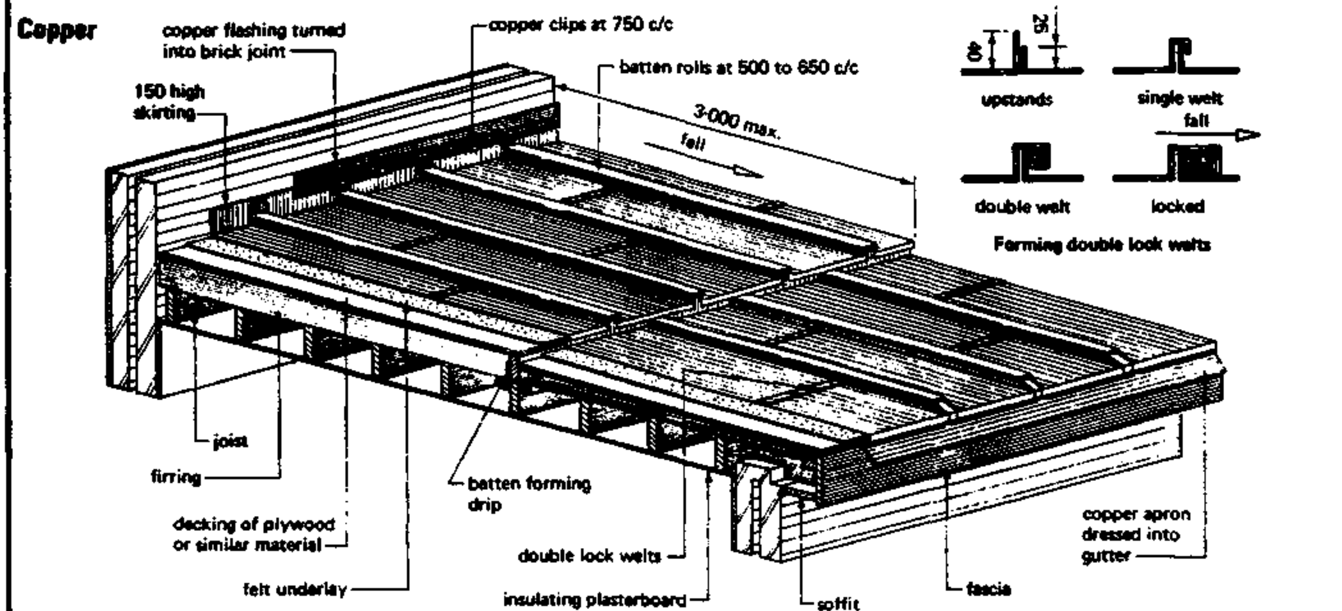

9. ROOFS compiled: D. VOLKE OCT. '79	ROOF COVERINGS	BUILDING CONSTR. LECTURE CET 5031/1 9.557
TCA TECHNICAL COLLEGE ARUSHA CHUO CHA UFUNDI ARUSHA	CIVIL ENGINEER. DEPARTMENT	57

SHEET COVERING

ASBESTOS SHEET COVERING :
LAYING OF THE
2. AND 3. SHEET
WITH CORNERCUT

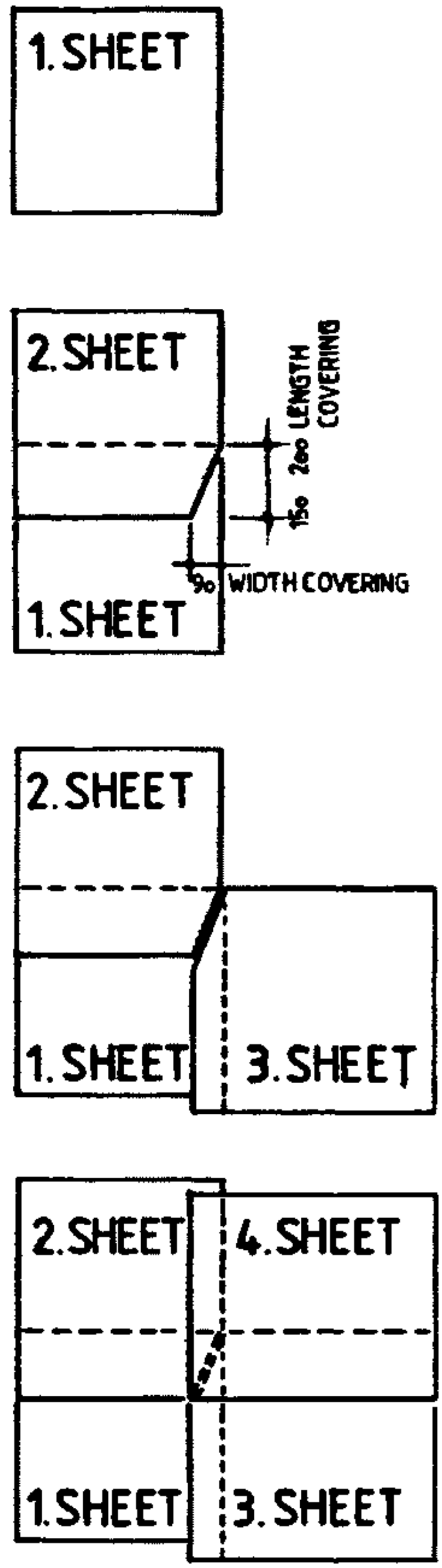

Typical asbestos cement sheet profiles

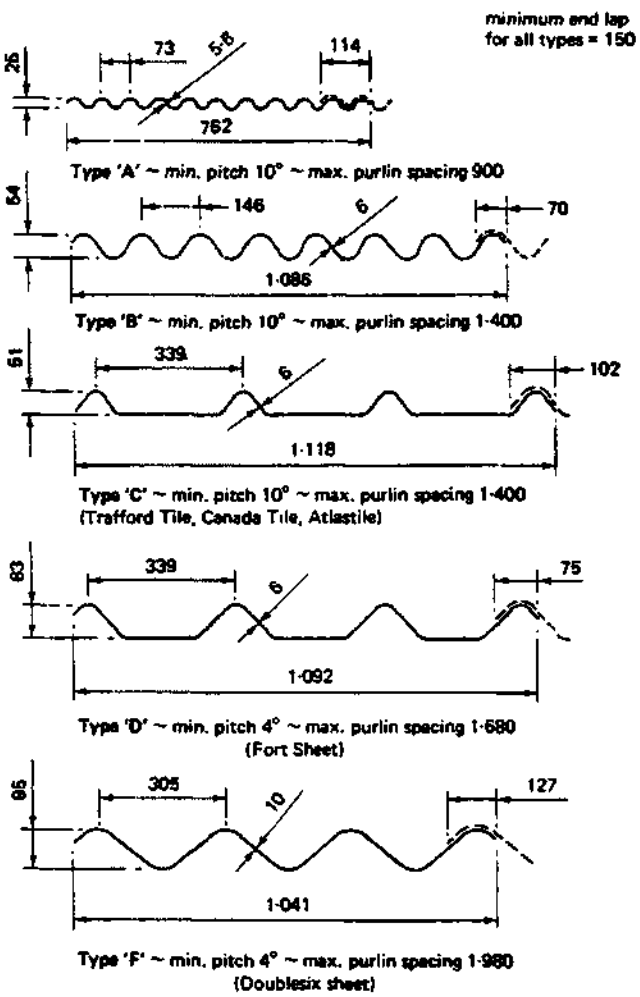

Type 'A' ~ min. pitch 10° ~ max. purlin spacing 900

Type 'B' ~ min. pitch 10° ~ max. purlin spacing 1·400

Type 'C' ~ min. pitch 10° ~ max. purlin spacing 1·400
(Trafford Tile, Canada Tile, Atlastile)

Type 'D' ~ min. pitch 4° ~ max. purlin spacing 1·680
(Fort Sheet)

Type 'F' ~ min. pitch 4° ~ max. purlin spacing 1·980
(Doublesix sheet)

All sheets are available in lengths from 900
to 3·000 in 150 mm increments
For other profiles see BS 690

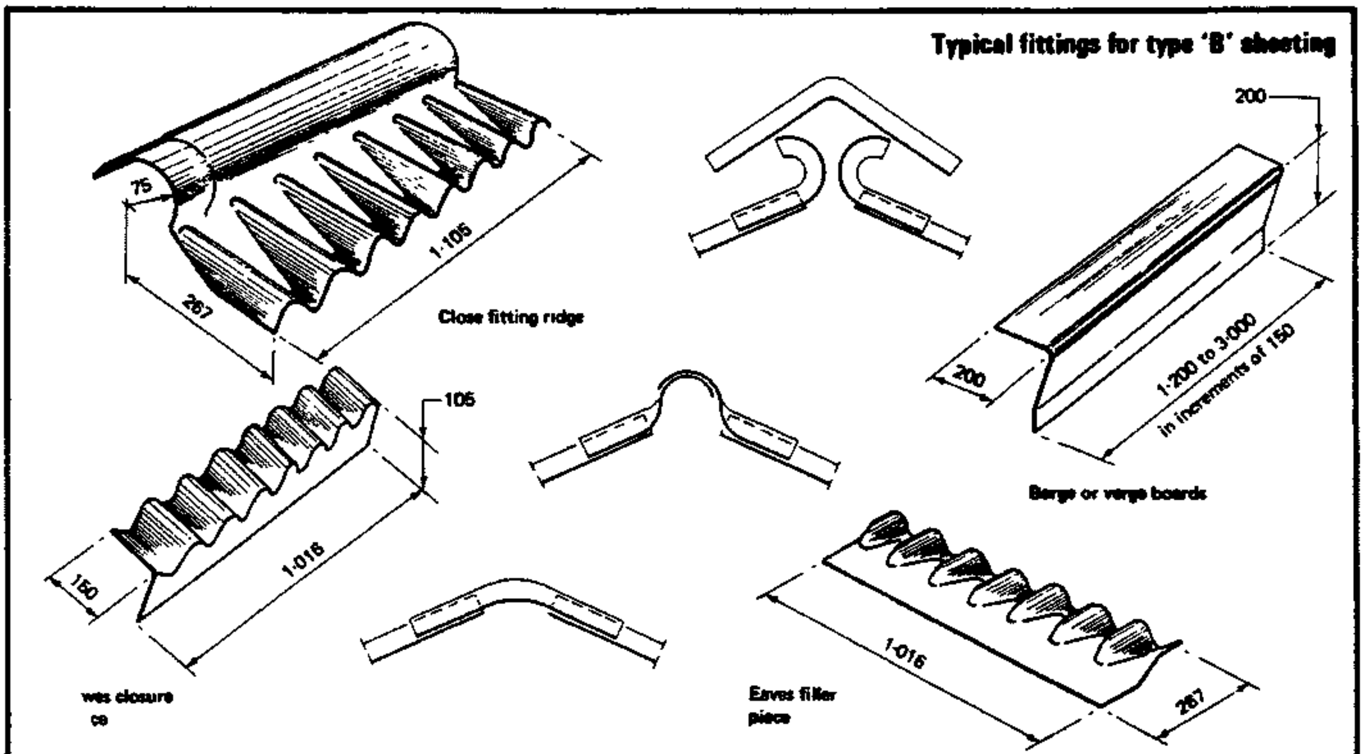

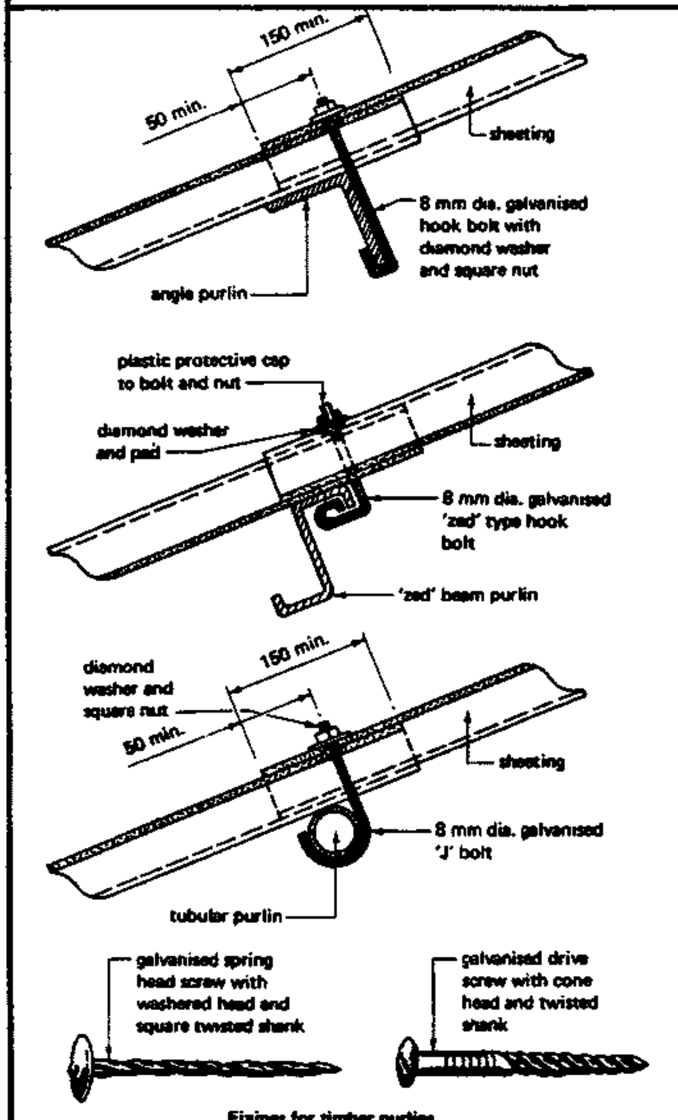

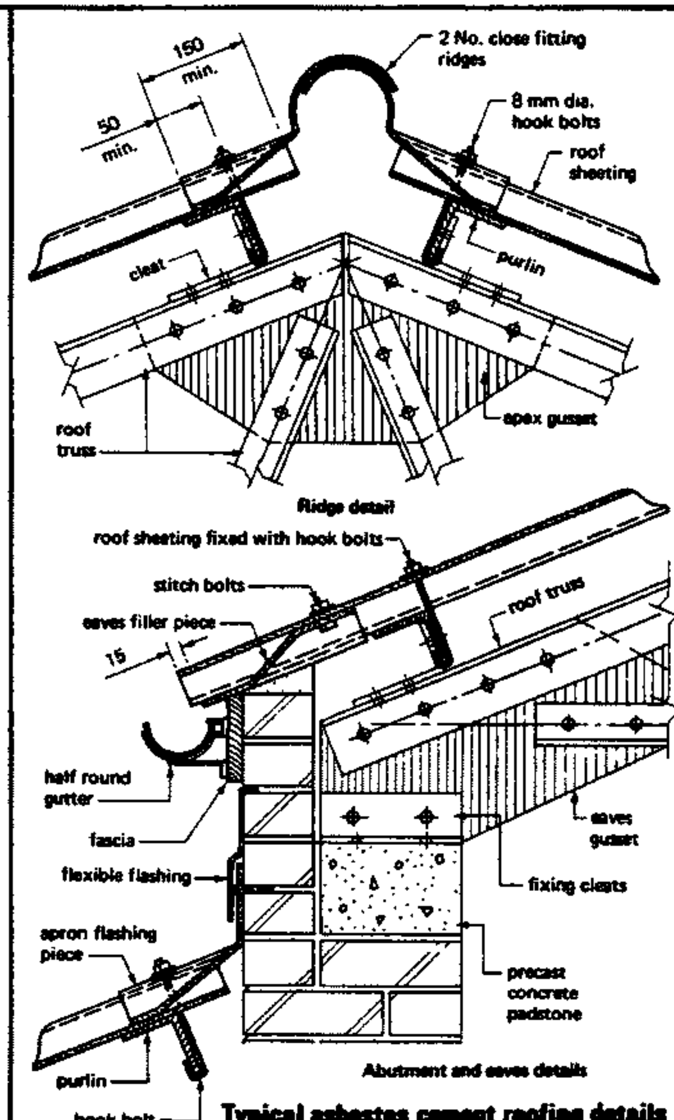

9. ROOFS compiled: D.VOLKE OCT. '79	ROOF COVERINGS	BUILDING CONSTR. LECTURE CET 5031/1 9.559

TCA	TECHNICAL COLLEGE ARUSHA CHUO CHA UFUNDI ARUSHA	CIVIL ENGINEER. DEPARTMENT	59

○ SCALLOPED COVERINGS

- Roofing tiles

a Clay tiles: Hand-made
machine-pressed

b Plain concrete tiles:(sand/cement/water, compressed in a mould) are uniform in texture, shape and colour.

<u>Nibs:</u>
either projecting nibs at one end of the tiles, or one continous nib, in order to secure the tiles to the sloping surface of the roof.

<u>Camber</u>:
the tiles are not perfectly flat, but have a slight rise or CAMBER in the back, to prevent water being drawn up between the tiles by capillary action.

<u>Gauge and Lap</u>:
plain tiles are hung so that at every point on the roof there are at least two thicknesses of a tile.
The sides butt together and these joints are bonded up the slope of the roof.
The tiles in every 4th course are nailed to the battens.
In very exposed positions every tile should be nailed to the battens.

ROOFING TILES

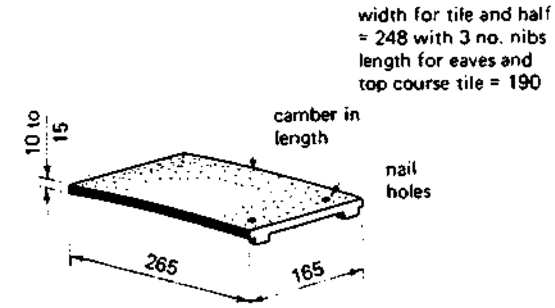

Standard Plain Tiles

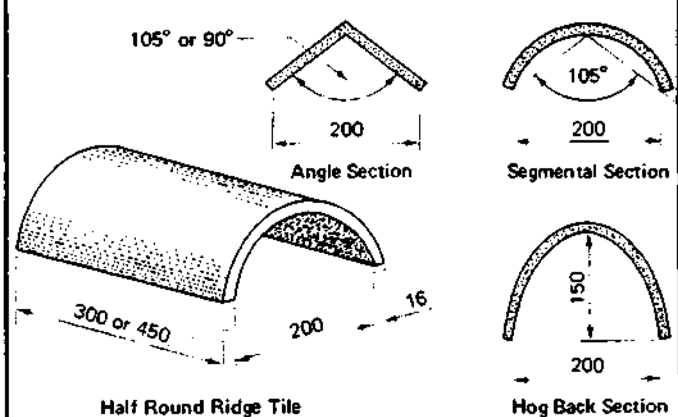

Typical Ridge Tiles

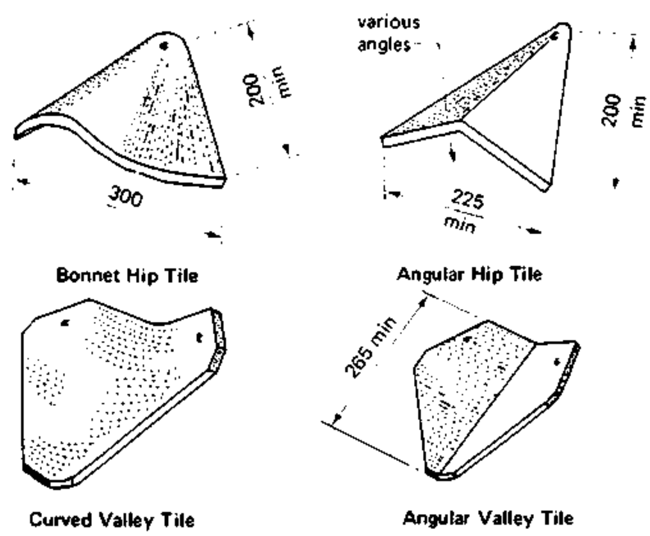

9 ROOFS compiled D VOLKE OCT '79	ROOF COVERINGS	BUILDING CONSTR LECTURE CET 5031/19560

ROOFING TILES

PLAIN TILES ARE LAID TO DOUBLE LAP

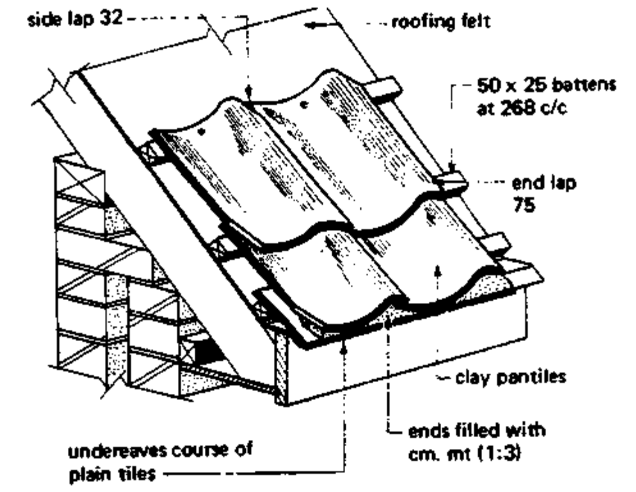

Eaves:
A double coarse overhangs the fascia board some 40 mm.(in order to shed water into the eaves gutter)

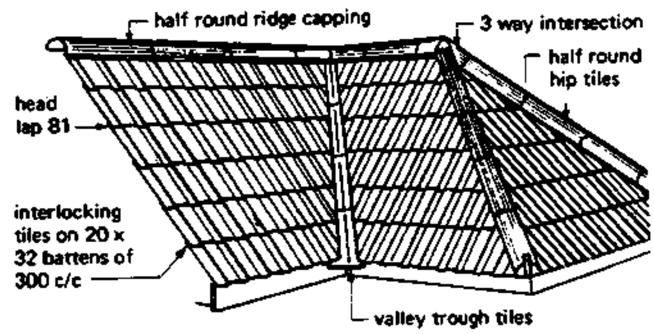

Ridge:
There are 4 standard sections of clay ridge tiles.

- Half round ridge tile
- Segmental ridge tile
- Angle ridge tile
- Hog back ridge tile

All ridge tiles have their edges bedded in fillets of cement mortar spread on the back of the top course tiles.

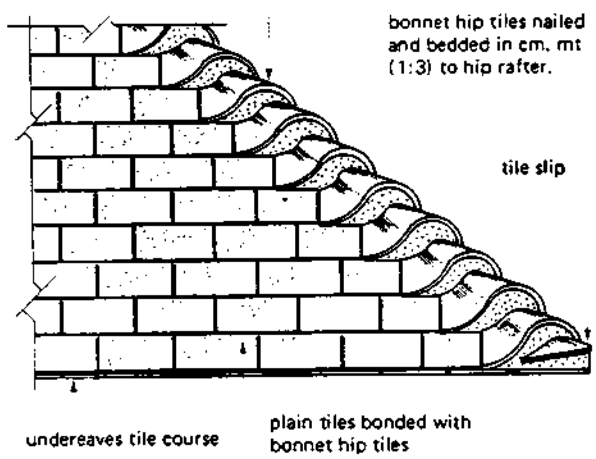

Hips:
May be covered with ridge tiles bedded in exactly the same way as on ridges.
To prevent the tiles from slipping down, a galvanized iron or wrought-iron hip iron is fixed to the hip or fascia.
The tiles next to the hip have to be cut to fit against the side of the hip rafter so that they lie under the hip tiles.

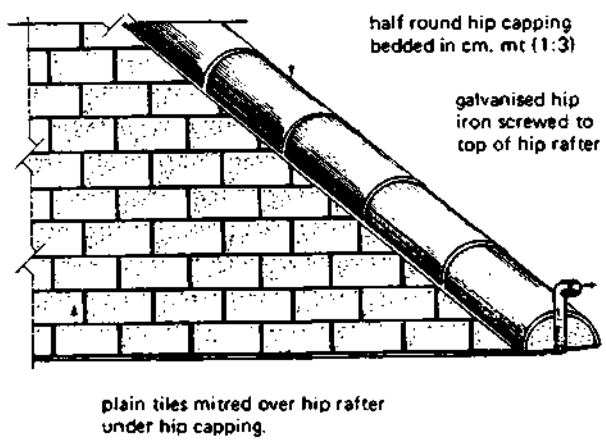

ROOFING TILES
DIFFERENT TYPES

1 PANTILE
2 INTERLOCKING TILE
3 PLAIN TILE

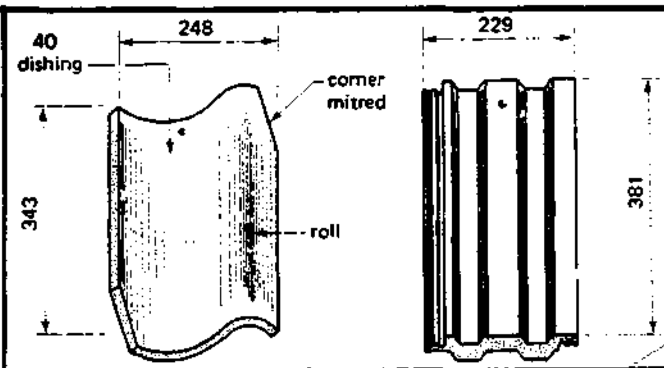

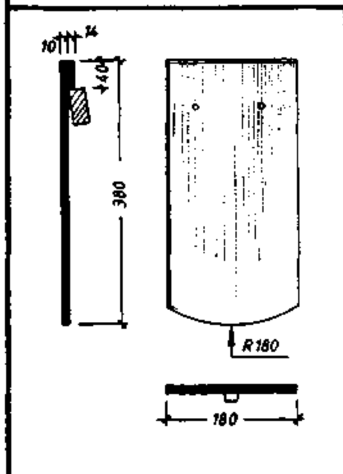

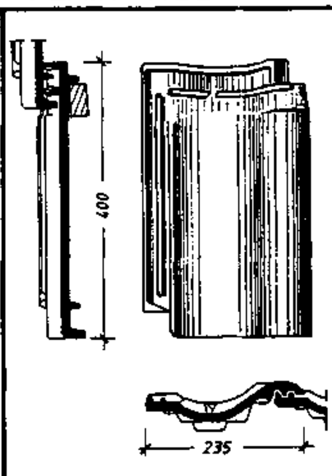

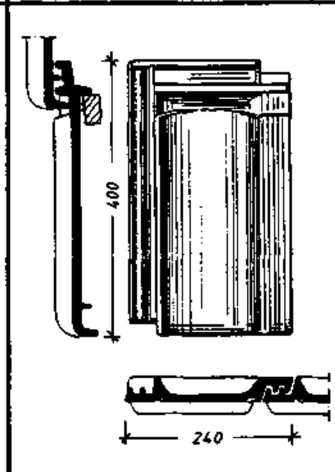

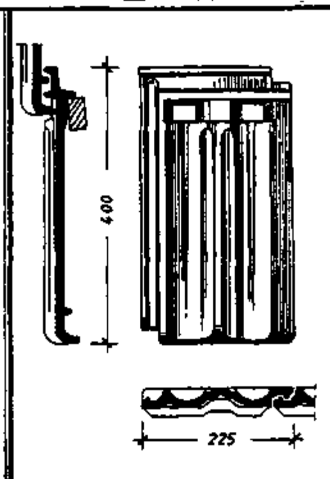

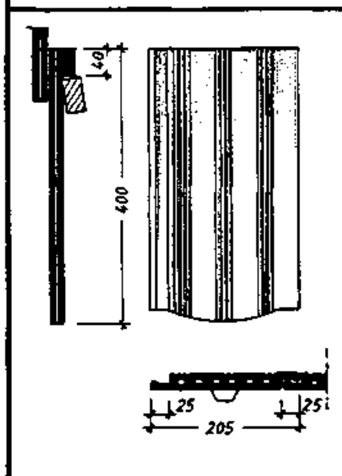

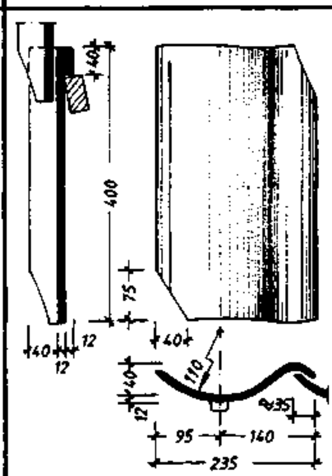

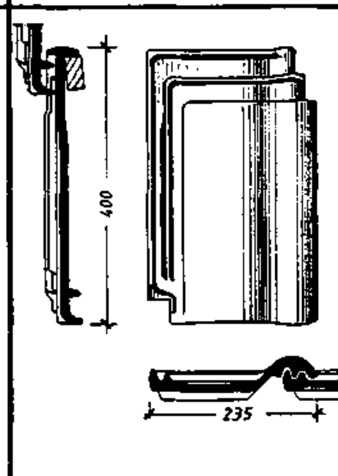

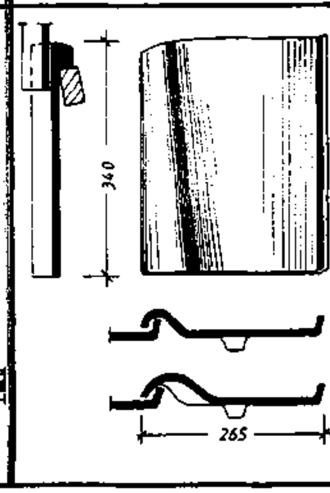

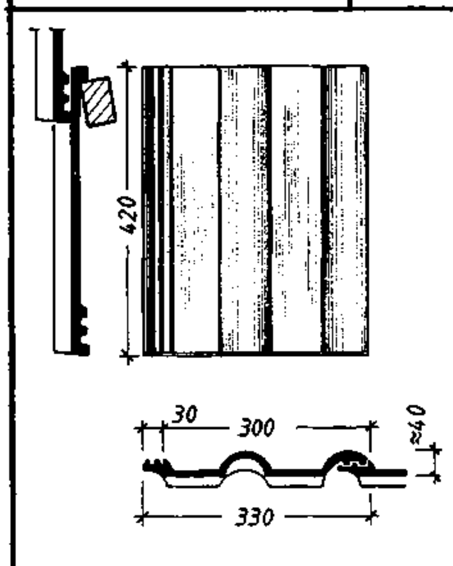

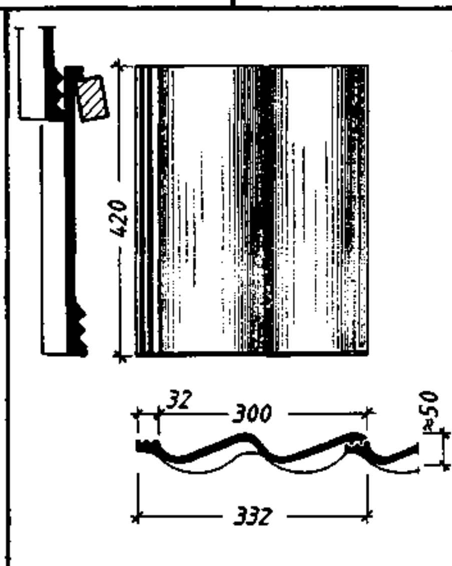

4 INTERLOCKING PAN
5 - - - -
6 - - TILE
7 PLAIN TILE, INTERLOCKING
8 PANTILE (german)
9 FLATROOF PAN
1o S-TILE
11 'FRANKFURTER' PAN (concrete)
12 DOUBLE-S PAN (concrete)

9. ROOFS compiled : D.VOLKE OCT. 79	ROOF COVERINGS	BUILDING CONSTR LECTURE CET 5031/1 9.562

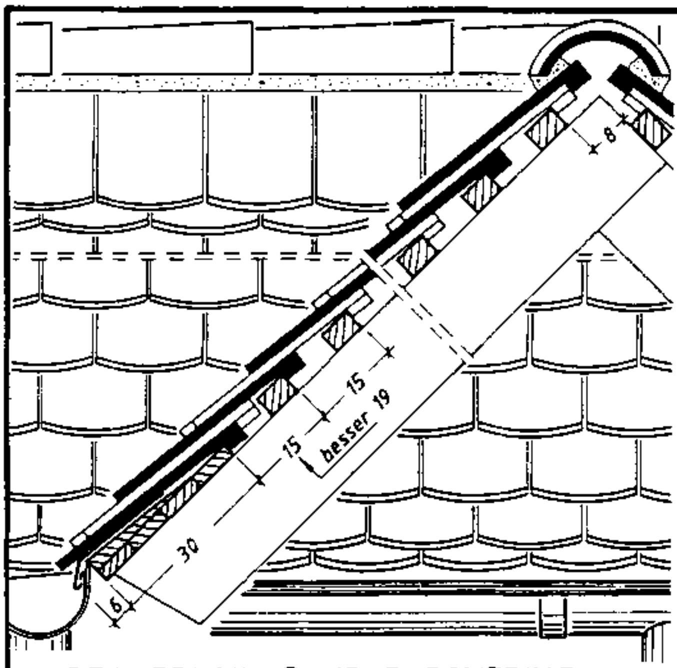

BEAVERTAIL DOUBLE COVERING

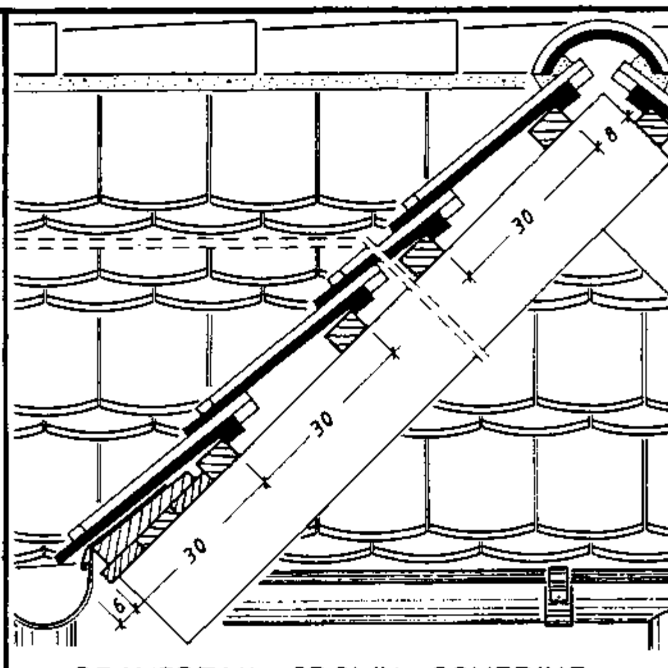

BEAVERTAIL CROWN COVERING

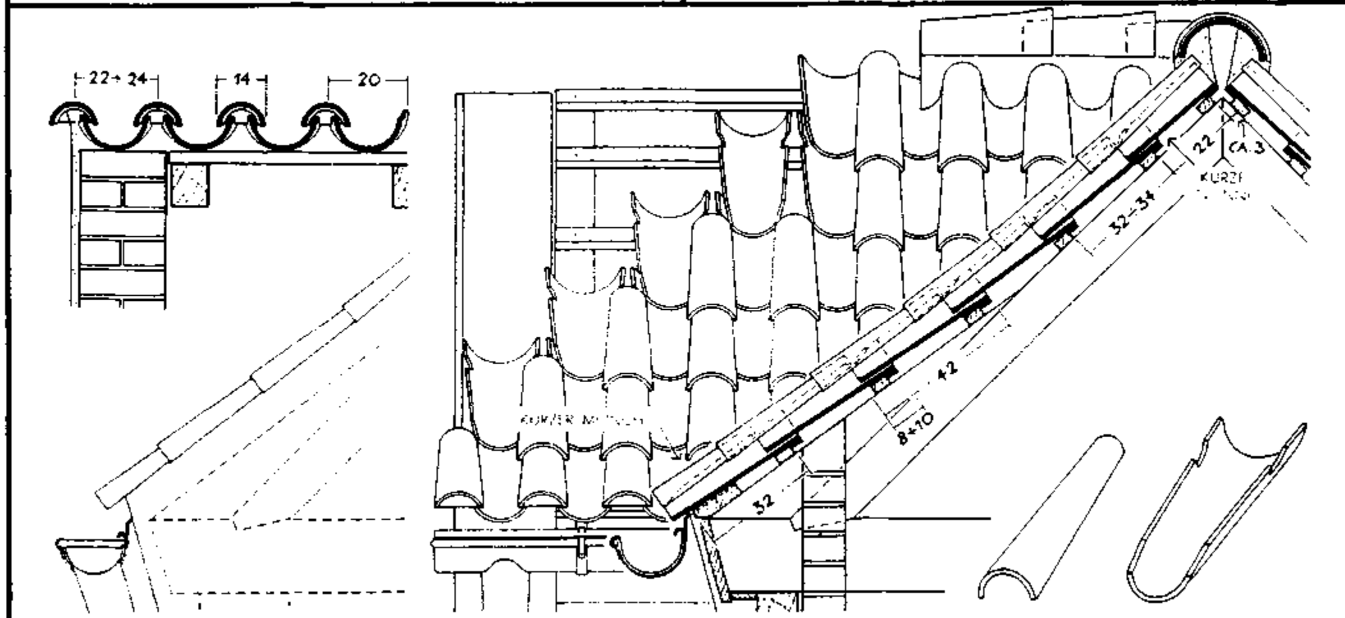

ROMAN TILE COVERING

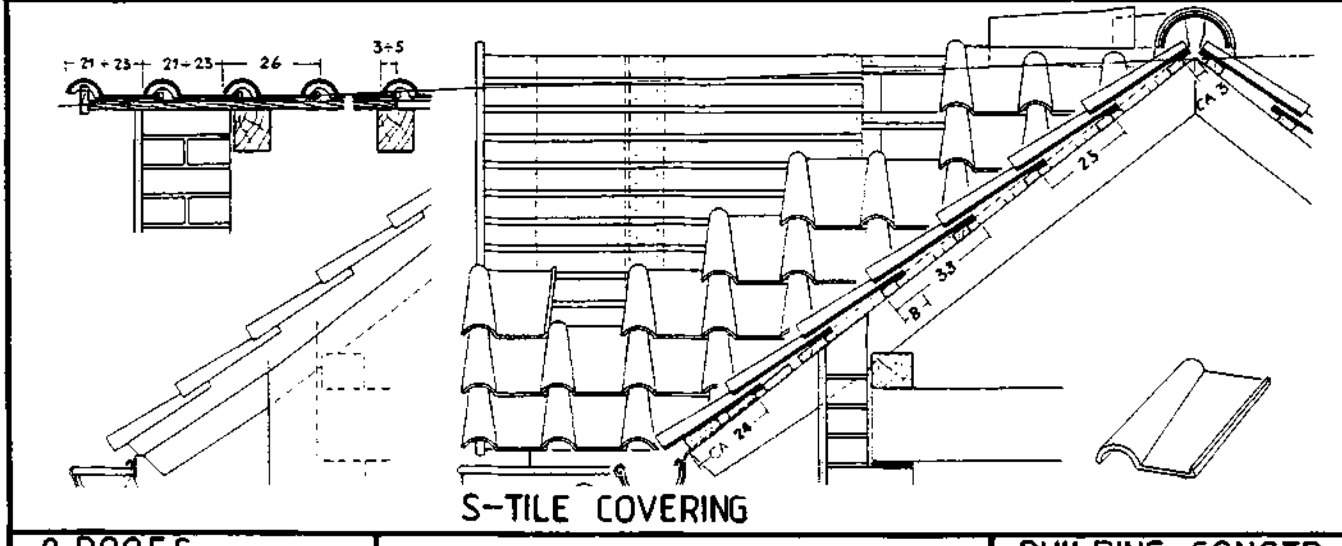

S-TILE COVERING

9. ROOFS		BUILDING CONSTR.
compiled: D.VOLKE		LECTURE
OCT. '79		CET 5031/1 9.563

TCA TECHNICAL COLLEGE ARUSHA
CHUO CHA UFUNDI ARUSHA

CIVIL ENGINEER.
DEPARTMENT

SLATES

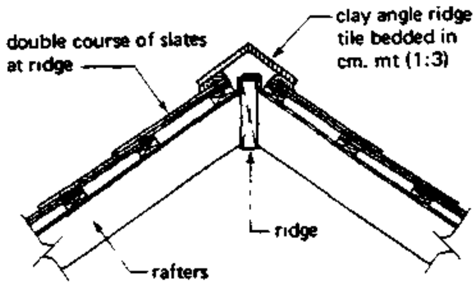

Typical Ridge Detail

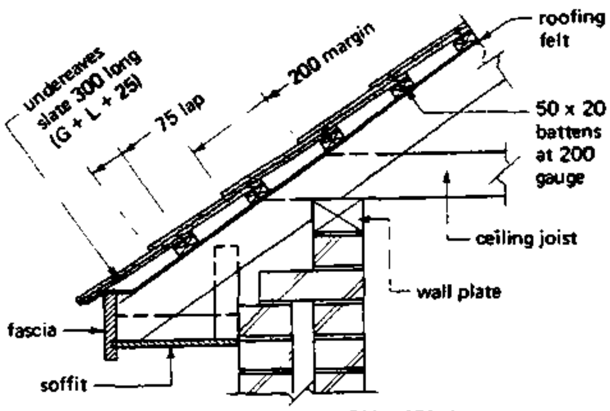

Head Nailed Slating Using 500 x 250 slates

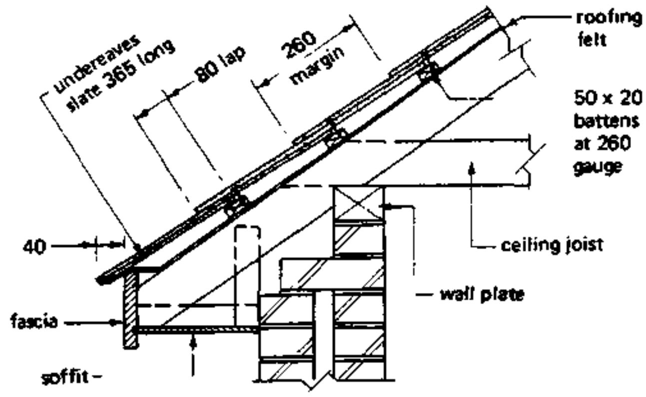

Centre Nailed Slating Using 600 x 300 slates

ASBESTOS SLATES

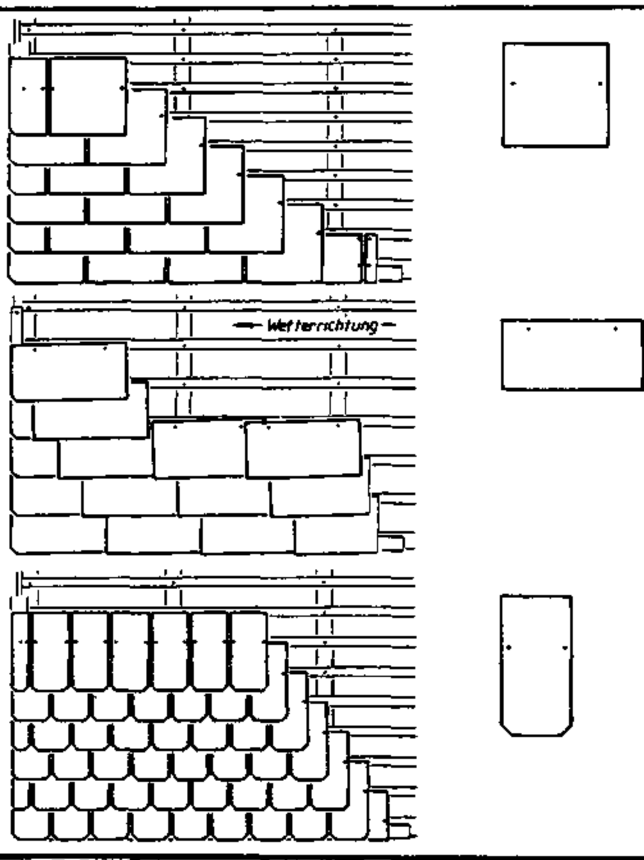

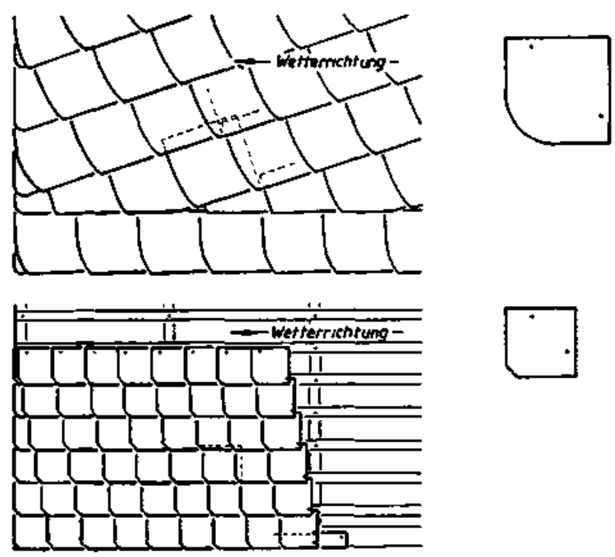

9. ROOFS compiled: D.VOLKE OCT. '79	ROOF COVERINGS	BUILDING CONSTR. LECTURE CET 5031/ 19.564

TCA	TECHNICAL COLLEGE ARUSHA CHUO CHA UFUNDI ARUSHA	CIVIL ENGINEER. DEPARTMENT	64

SHINGLES

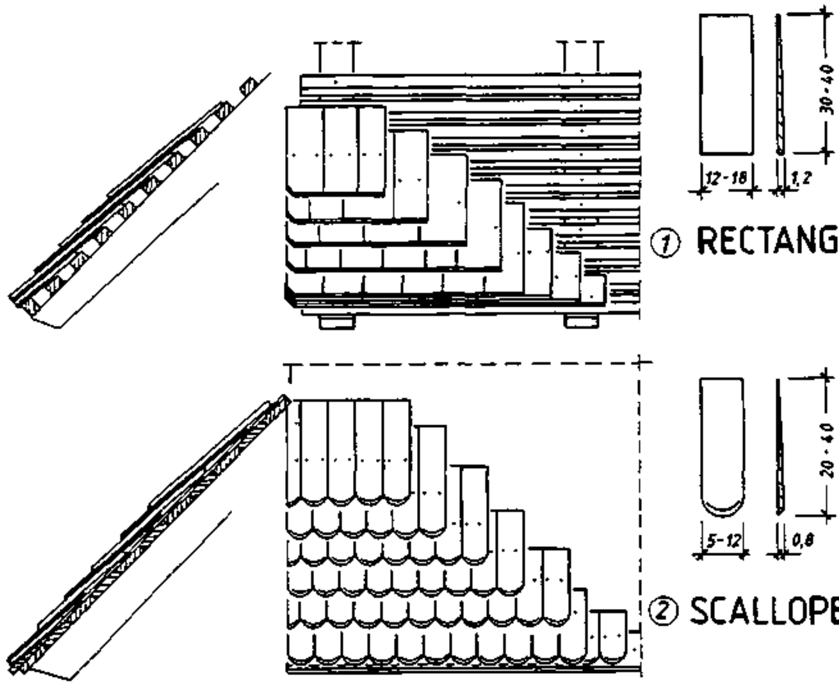

○ THATCH COVERINGS

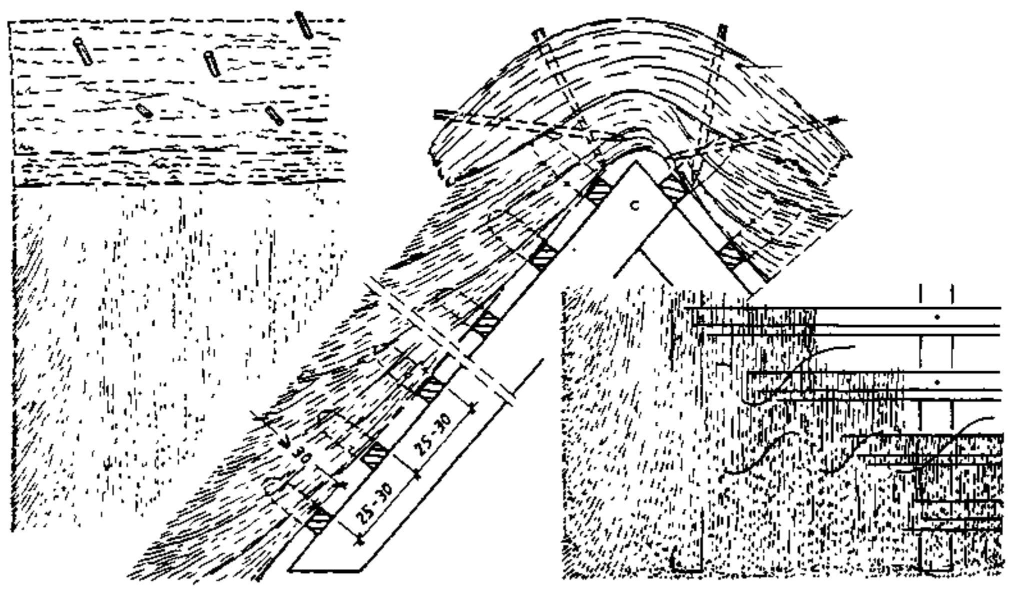

9 ROOFS compiled : D.VOLKE OCT. '79	ROOF COVERINGS	BUILDING CONSTR. LECTURE CET 5031 / 1 9.565

Try to answer the following questions and use sketches where ever necessary and possible

9.1 What are the main functions of a roof?

List the requirements the roof must satisfy to fulfil its functions efficiently and explain briefly the importance of these requirements.

9.2 Explain the terms:
- Roof structure, and
- 'Skin' of the Roof

Classify the different types of roofs in three different ways

Define the following terms:
- Flat roofs
- pitched roofs
- two-dimensional roof structures
- three - dimensional roof structures
- single roof construction
- double roof construction
- triple roof construction
- long span roofs
- medium span roofs
- short span roofs.

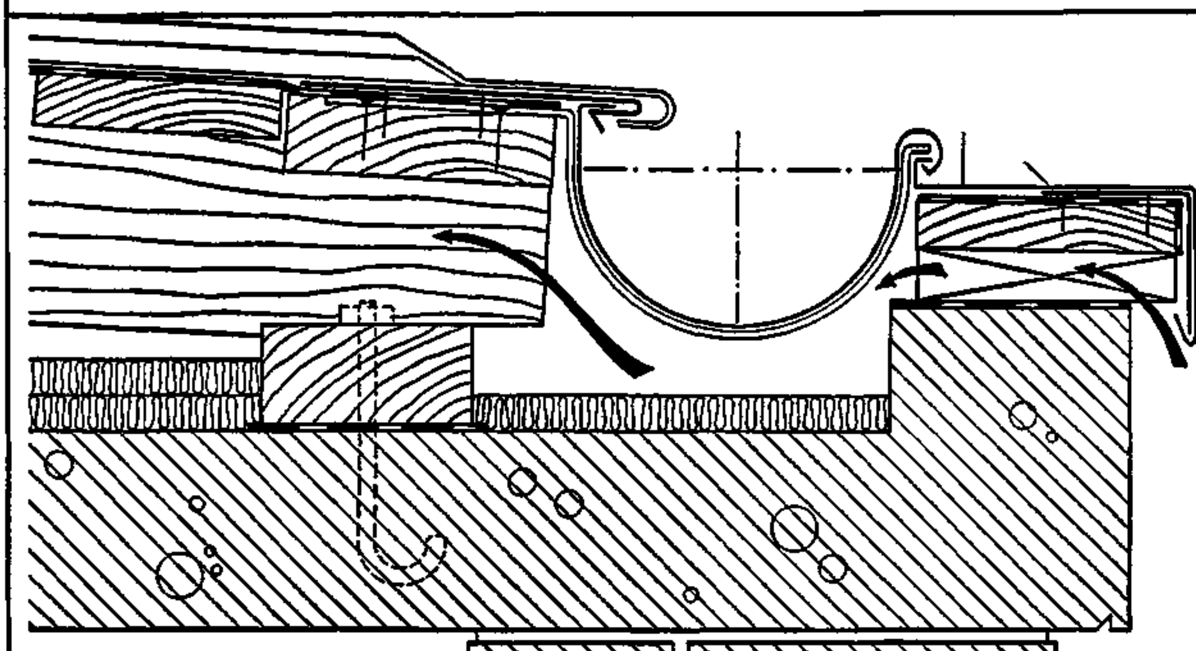

9.3 Write notes on Flat Roofs, explaining
- the structure of a flat roof
- thermal insulation materials
- single and double roof construction
- reinforced concrete flat roofs
- timber flat roofs
- parapet walls

and use sketches for illustration.

9.4 Write notes on Pitched Roofs, explaining
- the types of pitched roofs according to the shape of the roof
- the types of pitched roofs according to the structure of the roof

and use sketches for illustration.

Explain the following terms briefly:
- gable
- gable parapet
- verge
- hip
- hipped end
- vally
- ridge

Referring to truss construction in timber, compare the three modern methods of joining the members:
- nailed joints
- bolt and connector joints
- glued joints

and describe their advantages and disadvantages.

Show by means of neat sketches examples of
- open projecting eaves and
- closed projecting eaves

Write notes on Openings in timber roofs, including DORMER WINDOWS. Use sketches for illustrations.

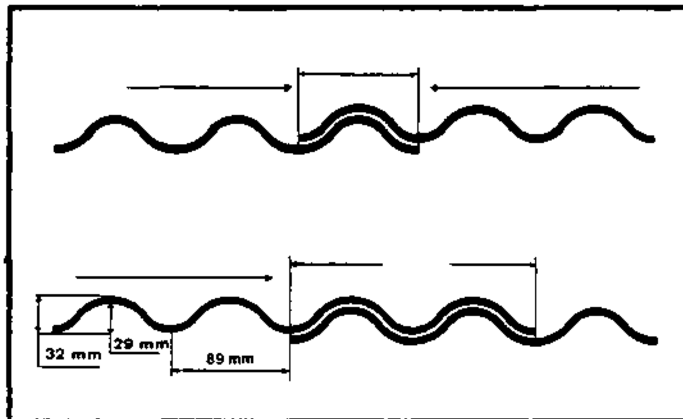

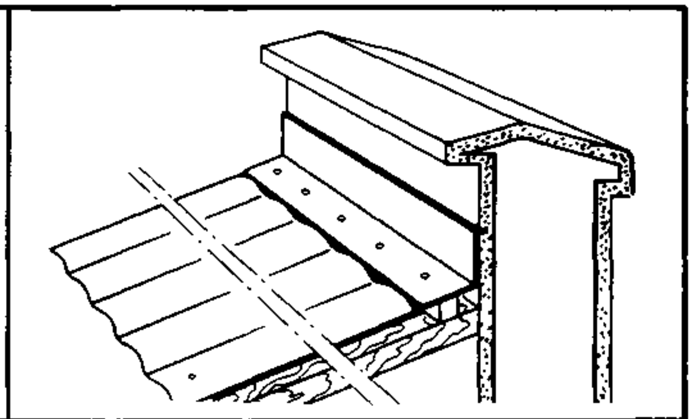

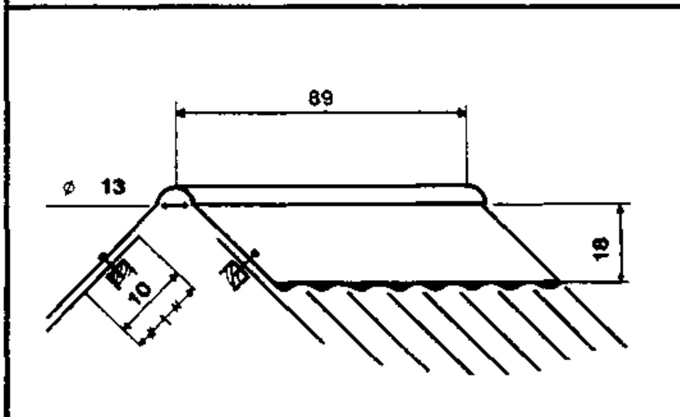

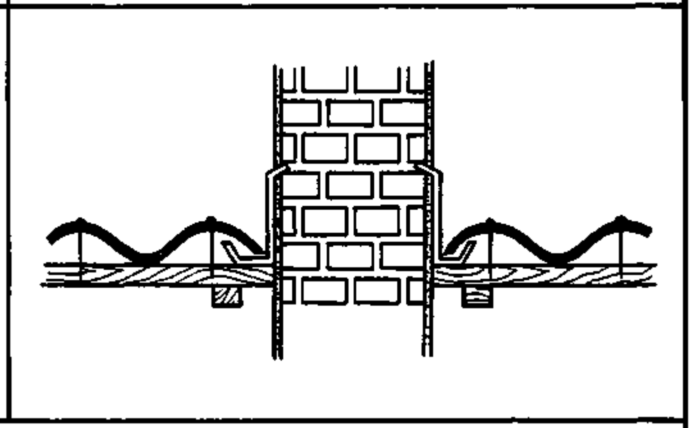

9.5 Classify the different types of roof coverings
What sort of covering materials may be used for the above listed types of roof coverings?

Explain - by means of sketches - different types of substructures depending on the 'skin' covering the roof.

Write notes on the choice of roof coverings and explain in the form of a diagram the interdependency of the pitch of the roof and the covering material.

Show - by using sketches for illustration - covering methods for different sorts of materials, such as:

- one -, two-, three-, layer table covering
- asbestos sheet covering
- covering with roofing tiles
- covering with slates
- covering with asbestos plain tiles
- covering with shingles
- thatch covering
- sheet metal covering

10.FRAMED STRUCTURES

CONTENTS :

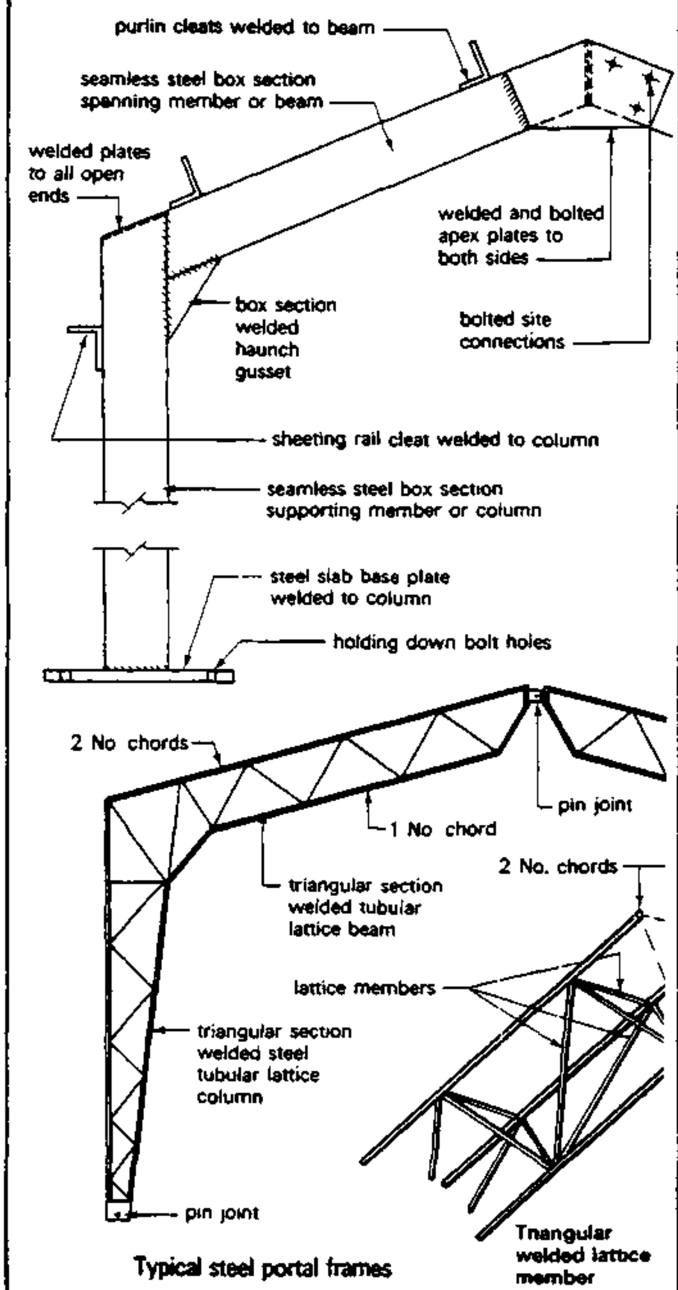

Typical steel portal frames

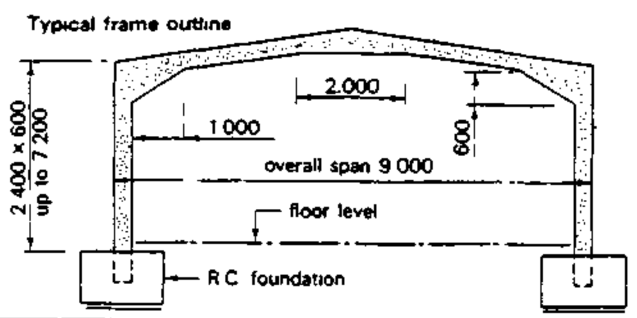

REFERENCES :

1. R. Chudley
   'Construction Technology'
   Vol. 2 and 3

2. Jack Stroud Foster
   Mitchell's Building Contruction
   'Structure and Fabric'
   Part 1 and 2

10.FRAMED STRUCTURES

10.1

10.1. Structural Concept:

- A framed structure (or skeleton structure) consists essentially of a skeleton or framework which supports all the loads and rsists all the forces acting on the building and through which all loads are transfered to the soil on which the building rests.
- The elements of such framework are pairs of uprights, supoorting some form of spanning members.
  These are spaced apart and tied together by longitudinal members to form the volume of the building.
  They are classified as:
  - BUILDING FRAMES of columns and horizontal beams for single and multi-storey buildings.
  - SHED FRAMES, of columns and roof trusses for single-storey buildings, and
  - PORTAL or RIGID FRAMES, of columns and horizontal or pitched beams for single-storey buildings.
- In these frames the vertical supports are in compression.
  SUSPENDED (or SUSPENSION) STRUCTURES have been developed in which the floos are suspended from the top of the building by vertical supports which are therefore in tension.

  Other forms of skeleton structures are the frameworks of interconnected members, known as GRID STRUCTURES.
- By its nature the skeleton frame connot enclose the space within it. Therefore other enclosing-elements must be assosiated with it.

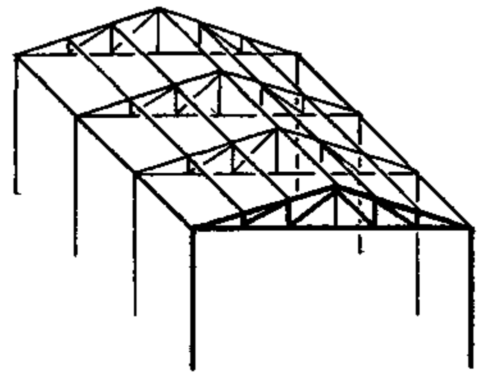

SHED FRAME

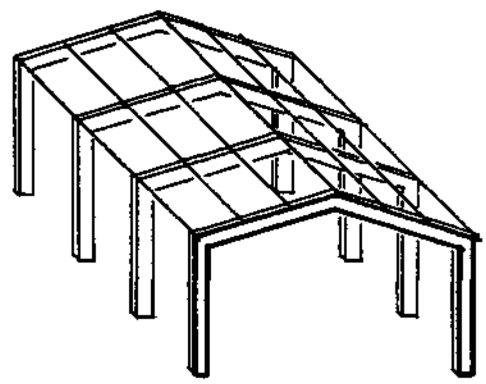

PORTAL FRAME

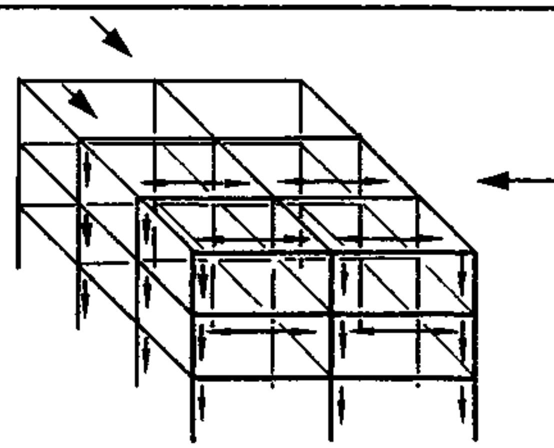

BUILDING FRAME

- The significance of this clear destinction between the supporting element and the enclosing element is that the enclosing element can be made relatively light and is not fixed in its position relative to the skeleton frame or may fit into the panels of the frame.

The advantages of framed structures are:

1) Saving in floor space (particularly when internal structural supports must be provided)
2) Flexibility in plan and building operations because of the absence of load bearing walls at any level.
3) Reduction of dead weight.

These advantages do not necessarily make a framed structure economically advantageous in every circumstances, i.e. in the case of individual small_scale buildings where the plan area is divided into rooms by walls and partitious.

In general it can be said that framed structures become logical and economical:

1. When the span of roof or floor becomes great enough to necessiate double construction involving beams or truses applying heavy concentrated loads at certain points on the supporting structure.
2. In the case of industrialised system building, the framed structure can be economic even for small-scale building types. (Due to largescale production and to the reduction in erection time and of labour on site which should accompany the use of prefabricated components.

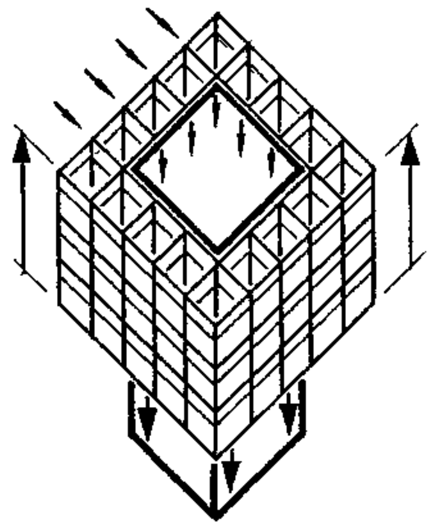

SUSPENSION STRUCTURE

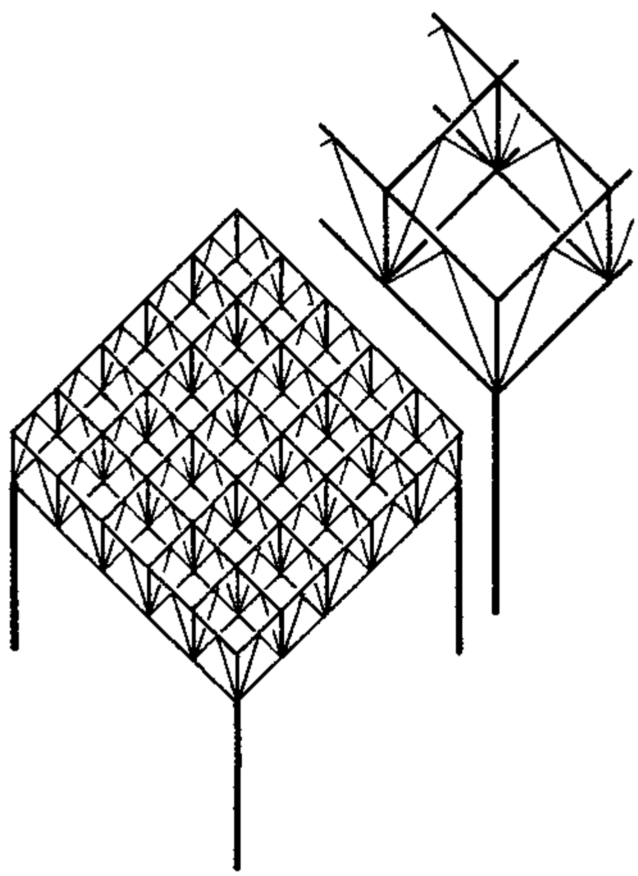

GRID STRUCTURE

10.2 Functional Requirements

Strength and stability: Are ensured by the use of appropiate materials in suitable forms applied with regarding to the manner in which a structure and its parts behave under load.

- Building frames may be classified according to the stiffness or rigidity of the joints between the members, especially between columns and beams.

A NON-RIGID (or pin-jointed) frame is one, in which the nature of the joints is such that the beams are assumed to be simply supported and the joints non-rigid.

Rigidity in the framed structure as a whole is ensured by the inclusion of some stiffing elements in the structure often in the form of triangulating members.
Steel and timber frames are commonly joined together in this manner and sometimes precast concrete frames.

A SEMI-RIGID frame is one in which some (or all) joints are such that some rigidity is obtained. A technique usually limited to steel frames and which effects some saving in materials. In

A FULLY - RIGID frame.all joints rigid. This results in considerable economics in material in the frame.
Depending upon the nature of the structure the joints alone may provide the stiffness necessary to prevent the frame as a whole from deforming under lateral wind pressure, although additional stiffening elements are often required. This type of building frame can be constructed in steel and concrete.

NON-RIGID
SEMI-RIGID
FULLY-RIGID

Fire - resistance: An adequate degree of fire-resistance in the frame is essential in order that its structural integrity may be maintained in the event of fire, either for the full period of a total burn-out or for a period at least long enough to permit any occupants of the building to escape.

- Concrete is highly fire resistent but steel in many circumstance requires the provision of fire-protection, of which a number of forms exist such as en - sure by concrete or by asbestos board. Timber, although a combustable material (which will easily burn in the form of thin boards) burns less readily when in thicknesses greater than about 15 cm. Its combusibility may also be reduced by the application of fire retardants.

10.3 STRUCTURAL MATERIALS

- Materials which are commonly used for framed structures are:
  - Steel
  - Concrete (reinforced or prestressed).
  - Timber
  - Aluminium alloys.
- Material for framed structures - particularly when these are TALL OR WIDE IN SPAN need to be:
  - Strong
  - Stiff.
  - Light in weight.

The stronger the material the smaller the amount which will be required to resist a given force.

The stiffer the material the less will the structure and its members deform under load.

The relationship of the depth of a spanning member or structure to its span is expressed as the DEPTH/SPAN RATIO, and is useful as a basis of comparison of the effects of using material and forms of structure of different degrees of stiffness. A small depth / span ratio indicats the achievement of adequate stiffness with minimum depth of spanning member.

The lighter the material (provided the strength is adequate) the lower the self-weight of the structure. The self or dead weight of a structure, as well as the load which the structure is to carry, contributesto the stresses set up within it.
Low dead weight is an important economic factor (especially in structures carrying light loads)

The smaller the self (or dead) weight of a structure relative to the load to be carried, the more economic the structure.

This relationship is expressed as the DEAD/LIVE LOAD RATIO.

STRONG
STIFF
LIGHT
IN WEIGHT

The raltionship of the weight of a material to its strength provides on indication of its efficiency in terms of the weight required to fulfil the structural function. This is expressed as the STRENGTH/WEIGHT RATIO, a high value indicating high strength with low self weight resulting in a minimum weight of material to fulfil a particular structural purpose.

DEPTH/SPAN RATIO
DEAD/LIVE LOAD RATIO
STRENGTH/WEIGHT RATIO

STEEL

STEEL is a material strong in both: compression and tension, and it is stiff.
A steel structure is therefore relatively economic in material because a small amount can carry a relatively large load and because it is stiff, the structure and its members will not easily deform under load.
It has a high strength/weight ratio. These characteristics make it suitable for both: low-rise and high-rise building frames and roof structures of all spans.

TIMBER

TIMBER varies its bending strength from about 1/28 to 1/23 that of mild steel (according to the specis and to the presence or absence of knots and faults in the timber). Compared with other materials its stiffness is low but in relation to is own weight, which is quite light, it is relatively very stiff. Thus in structural applications compensation for its lack of stiffness can be made without excessive increase in weight of structure.

It has a relatively high strength /weight ratio, and is suitable for lightly or moderately loaded low-rise building frames and for shed and rigid frames (particularly where the span and weight of these are large).

CONCRETE

CONCRETE varies in strength according to mis.
The compressive strength of normal structural concrete is about 1/16 that of steel, but its tensile strength is only about 1/10 of its compressive strength. Its stiffness is low compared with steel and its strength/weight ratio is low.
To overcome this weakness, structural members are REINFORCED in their tension zones with steel bares or PRESTRESSED in the same zones (usually by means of steel wires or cables).

In reinforced form concrete is suitable for SHORT-SPAN low- and high-rise building frames.
In pressed form for wide-span building and rigid frames.
Prestressed concrete may also be applied to shed frames using precast roof trusses.

ALUMINIUM

ALUMINIUM varies in strength according tothe particular alloy, from about 3/4 that of mild steel to strengths somewhat greater than that of steel. Although stiffer than either concrete or timber, aluminium alloys are only about 1/3 as stiff as steel but they are only about 1/3 its weight. These characteristics make them suitable for roof structures (which carry only light imposed loads); particularly those of long span, and less so for normal building frames. The high cost of aluminium usually precludes its structural use for other than very wide span roof structures.

10.4 Layout of Frames

- As a general rule: Space columns as closely as the nature of the building will permit. This resulting in short span beams or trusses will be cheaper than one with widely spaced columns. With smaller spans the beams reduce in size and cost and - similarly - the columns, because of the reduced loads they carry.

- The SPACING of the frames is influenced largely by the economic span of the floor or roofing system which they support and this will vary with the imposed floor or roof loading and the type of floor or roofing system.

In the case of building frames and rigid frames it can be shown, that as the frame beams increase in span (or frame columns increase in height) there comes a point at which it may be more economic to increase the spacing between the frames, rather than to maintain them at the most economic span of particular floor or roofing system.

In the case of shed frames, a close spacing of the frames usually gives the cheapest structure.

The layout of a skeleton structure should be based on a regular structural grid because:

- loads on the structure are transmitted evenly to the foundations (minimising relative settlement and standardising the sizes of foundation slabs).
- It results in regularity in beam depths and column sizes and in the position of columns and beams relative to walls. This avoids the use of 'waste' material to bring beams and columns to similar dimensions either because they are exposed to view or, in the case of reinforced concrete, to standardise formwork. It also standardises the size of dividing and enclosing walls or panels.
- In reinforced concrete work the regular slab and beam spans minimise the variations in rod sizes.
- It permits greater re-use of formwork, both in precast and in situ concrete construction.

10.5 BUILDING FRAMES

- Building frames are basically a series of rectangular frames, placed at right angles to one another so that the loads are transmitted from member to member until they are transferred through the foundations to the subsoil.
- Building frames can be economically constructed of
  - Concrete
  - Steel or a combination of the two and
  - Timber.

10.5.1 Funktions of building frame members

Main beams:
Span between columns and transfer the live and imposed loads placed upon them to the columns.
Secondary beams:
Span between and transfer their loadings to the main beams. Primary function is to reduce the spans of the floors or roof being supported by the frame.
Tie beams:
Internal beams spanning between columns at right angles to the direction of the main beams and have the same function as a main beam.
Edge beams:
As tie beam but spanning between external columns.
Columns:
Vertical members which carry the loads transferred by the beams to the foundations.
Foundation:
The base(s), to which the columns are connected and serve to transfer the loadings to a suitable load-bearing subsoil.

Floors:
May or may not be an integral part of the frame; they provide the platform on which equipment can be placed and on which people can circulate. Besides transmitting these live loads to the supporting beams they may also be required to provide a specific fire resistance, together with a degree of sound and thermal insulation.
Roof:
Similar to floors but its main function is to provide a weather-resistant covering to the upper most floor.
Walls:
The envelope of the structure which provides the resistance to the elements, entry of daylight, natural ventilation, fire resistance, thermal insulation and sound insulation.

REINF. CONCRETE FRAMES

10.5.2 Reinforced concrete frames

Reinforced concrete, because of its particular characteristics, can be formed into walls as well as into beams and columns to form a skeleton frame and the designer's freedom to cast concrete in almost any shape is only limited by the cost of the formwork or shuttering into which the concrete must be poured. This forms a large proportion of the total cost of a reinforced concrete structure as can be seen from the following approximate percentage breakdown:

- Concrete		40%
Materials	28%	
Labour	12%	
- Shuttering incl. errection and stripping		32%
Materials	12%	
Labour	20%	
- Reinforcement		28%
Materials	10%	
Labour	18%	

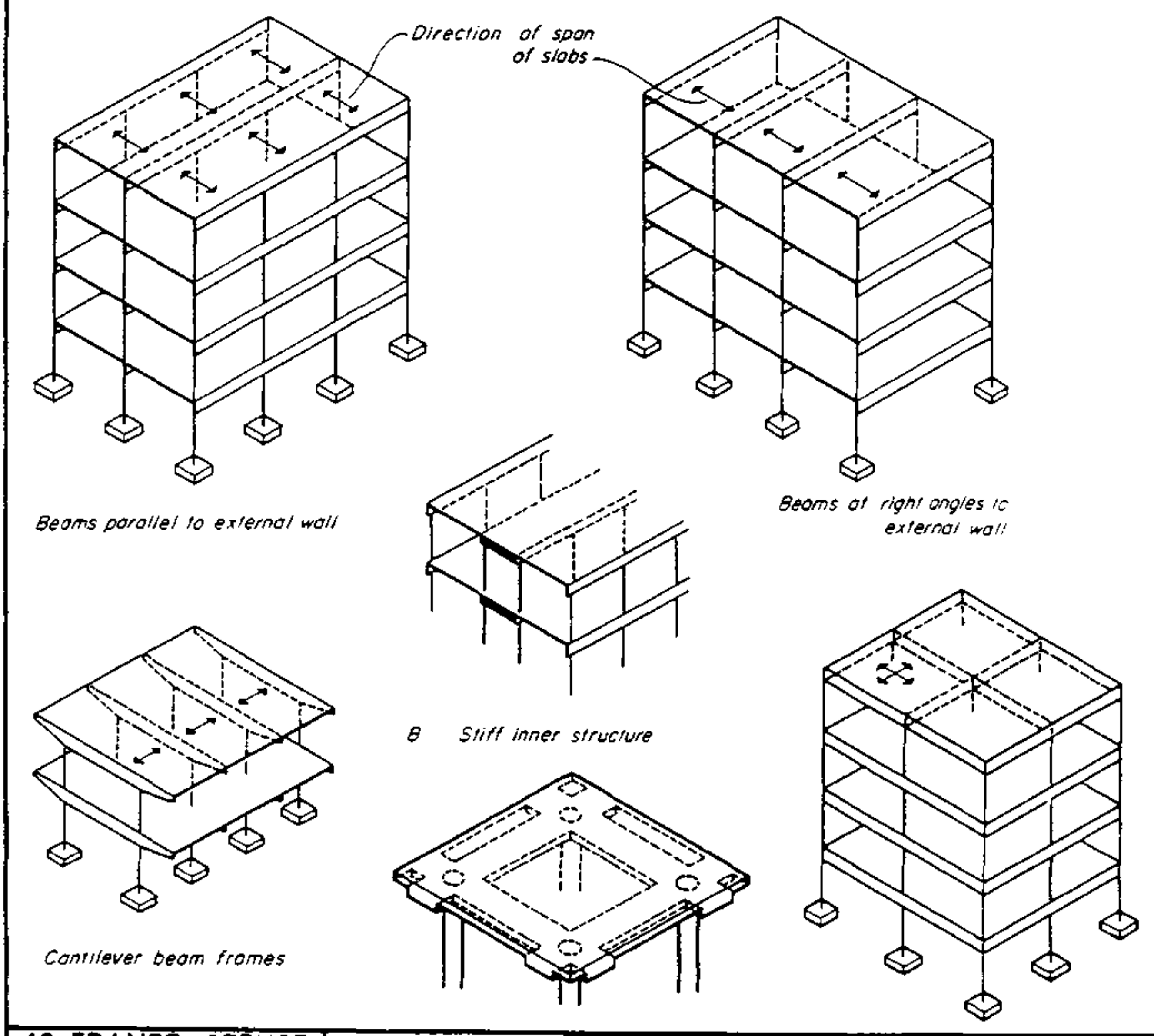

10.5.2.1 Reinforced concrete beams

Beams can vary in their complexity of design an reinforcement from the very simple beam formed over an isolated opening to the more common form encountered in frames where the beams transfer their loadings to the columns.
When tension is induced into beam the fibres will lengthen until the ultimate tensile strength is reached, when cracking and subsequent failure will occur.
With a uniformly distributed load the position and value of tensile stress can easily be calculated, but the problem becomes mor complex when heavy point loads are encountered.

The concrete design of a r.c. beam will ensure, that it has sufficient strength to resist both the compression and tensile forces encountered in the outer fibres, but it can still fail in the 'web' connecting the compression and tension areas. This form of failure is called SHEAR failure and is in fact diagonal tension.
Concrete has a limited amount of resistance to shear failure and if this is exceeded reinforcement must be added to provide extra resistance.
Shear occurs at or near the supports as a diagonal failure line at an angle of approximately 45^0 to the horizontal and sloping downwards towards the support (A useful fact to remember is that zero shear occurs at the point of maximum bending.).
Reinforcement to resist shearing force may be either stirrups or inclined bars, or both. The total shearing resistance is the sum of the shearing resistances of the inclined bars and the stirrups, calculatet seperately if both are provided.

Bending moment and shear force diagrams

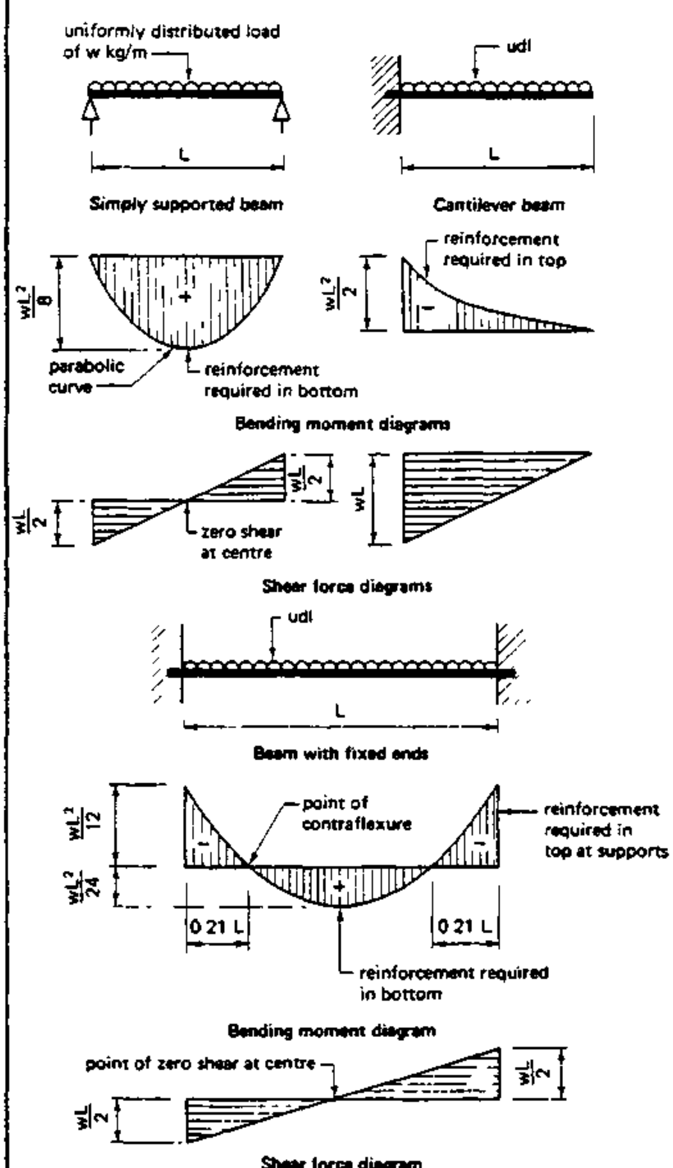

REINF. CONCRETE BEAMES

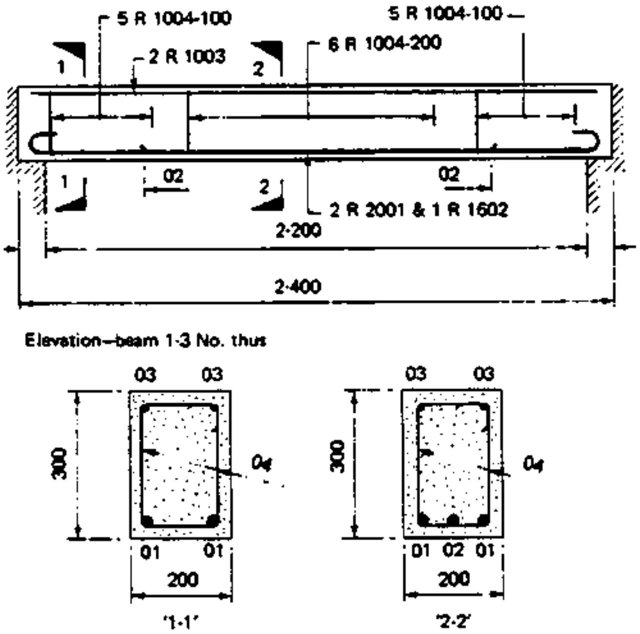

Typical R.C. beam details and schedule

Member	Bar mark	Type & size	No. of mbrs	No. in each	Total No.	Length of each bar†	Shape. All dimensions* are in accordance with BS 4466
Beam 1	1	R20	3	2	6	2660	2300
	2	R16	3	1	3	1400	straight
	3	R10	3	2	6	2300	straight
	4	R10	3	16	48	1000	250 150

† specified to nearest 25 mm   * specified to nearest 5 mm

Inclined or bent up bars should be at 45° to the horizontal and positioned to cut the anticipated shear failure plane at right angles. These may be seoarate bars or alternatively main bars from the bottom of the beam which are no longer required to resist tension which can be bent up and carried over or onto the support to provide the shear resistance Stirrups or binders are provided in beams, even where not required for shear resistance, to minimise shrinkage cracking and to form a cage for easy handling. The nominal spacing for stirrups must be such that the spacing dimension used is not greater then the lever arm of the section, which is the depth of the beam from the centre of the compression area to the centre of the tension area or 0.75 times the effective depth of the beam, which is measured from the top of the beam to the centre of the tension reinforcement. If stirrups are spaced at a greater distance than the lever arm it would be possible for a shearing plane to occur between consecutive stirrups, but if the centres of the stirrups are reduced locally about the position at which shear is likely to occur several stirrups may cut the shear plane and therefore the total area of steel crossing the shear plane is increased to offer the tensile resistance to the shearing force.

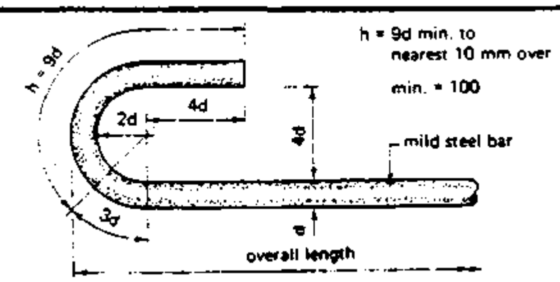

Standard hooks and bends

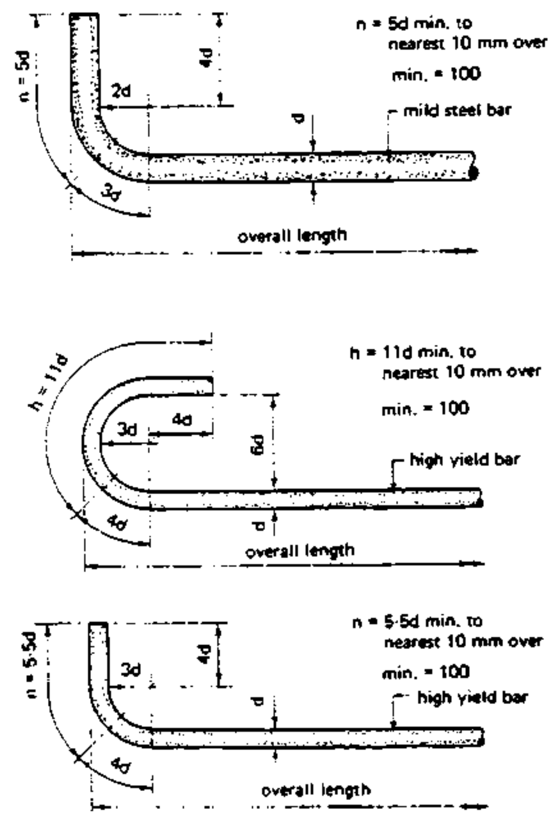

REINF. CONCRETE BEAMS

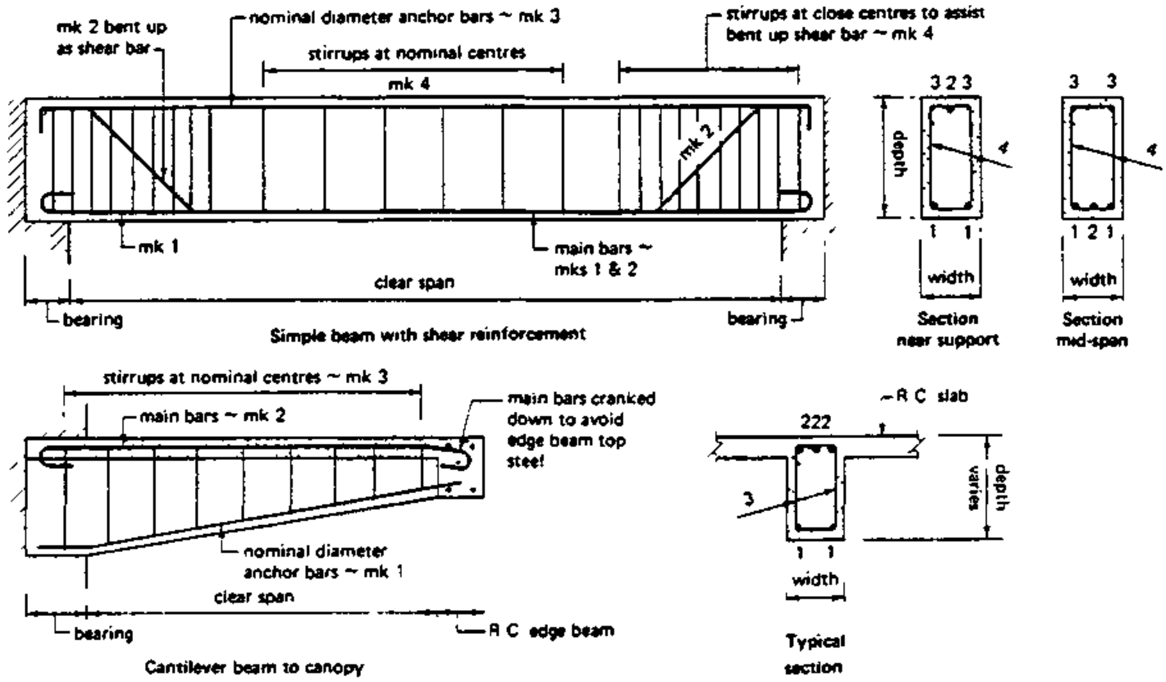

Simple reinforced concrete beams

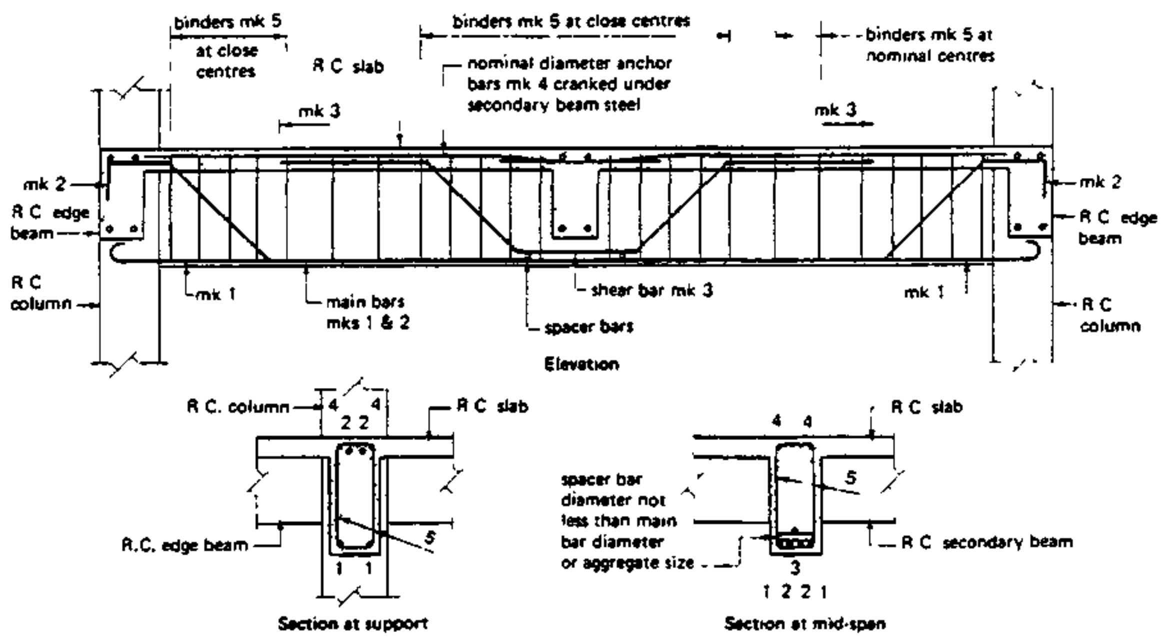

R.C. beam with heavy reinforcement

10 FRAMED STRUCT	BUILDING FRAMES	BUILDING CONSTR.
compiled : D.VOLKE		LECTURE
DEC. '82		CET 6031 / 11o 5 11

TCA TECHNICAL COLLEGE ARUSHA CHUO CHA UFUNDI ARUSHA	CIVIL ENGINEER DEPARTMENT	11

10.5.2.2 Reinforced concrete columns

A column is a vertical member carrying the beam and floor loadings to the foundation and is a compression member. Since concrete is strong in compression it may be concluded that provided the compressive strength of the concrete is not exceeded no reinforcement will be required. For this condition to be true the following conditions must exist:
1. Loading must be axial.
2. Column must be short, which can be defined as a column where the ratio of its effective height to its thickness does not exceed 12.
3. Cross section of the column must be large.

These conditions rarely occur in framed buildings, consequently bending is induced and the need for reinforcement to provide tensile strength is apparent. Bending in columns may be induced by one or more of the following conditions:
1. Load coupled with the slenderness of the column; a column is considered to be slender if the ratio of effective height to thickness exceeds 12.
2. Reaction to beams upon the columns, as the beam deflects it tends to pull the column towards itself thus inducing tension in the far face.
3. The reaction of the frame to wind loadings both positive and negative.

The minimum number of main bars in a bolumn should not be less than four for rectangular columns ans six for cicular columns with a total cross section area of not less than 1% of the cross sectional area of the column and a minimum diameter of 12mm. To prevent theslender main bars from buckling and hence causing spalling of the concrete, links or binders are used as a restraint.

REINF. CONCRETE COLUMNS

R.C. column binding arrangements

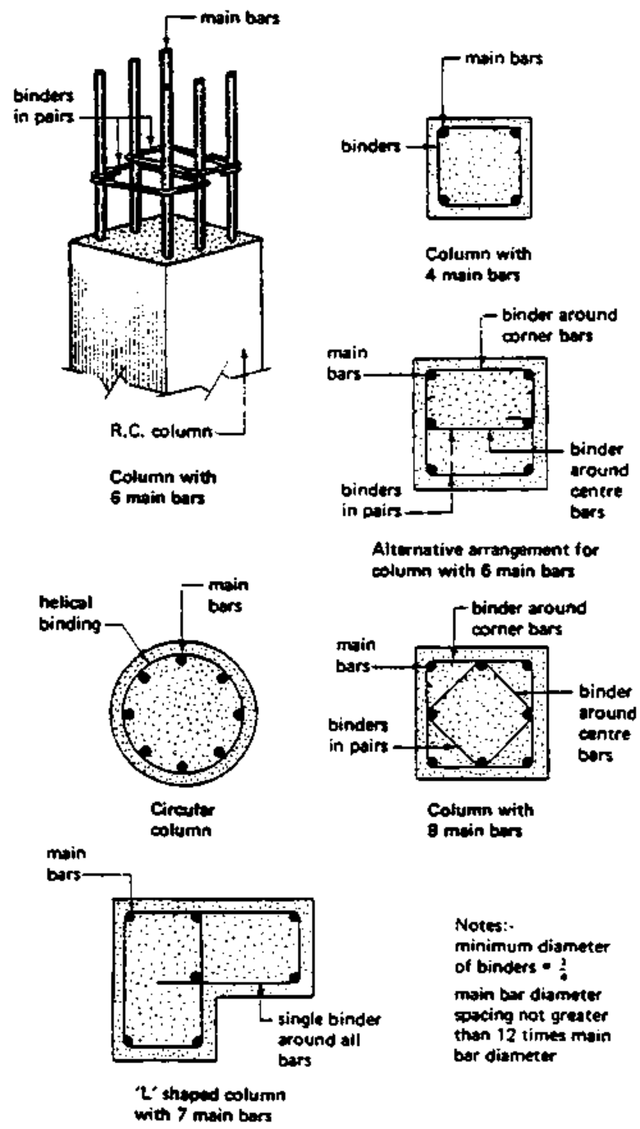

REINF. CONCRETE COLUMNS

These should be at least one-quarter of the largest main bar diameter and at a pitch or spacing not greater than twelve times the main bar diameter. All bars in compression should be tied by a link passing around the bar in such a way that it tends to move the bar towards the centre of the column.

Where the junction between beams and columns occur there could be a clash of steel since bars from the beam may well be in the same plane as bars in the columns. To avoid this situation one group of bars must be bent or cranked into another plane; it is generally considered that the best practical solution is to crank the column bars to avoid the beam steel.

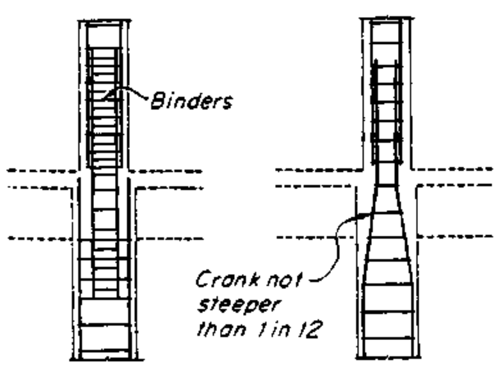

Alternative column splices

R.C. column and beam junctions

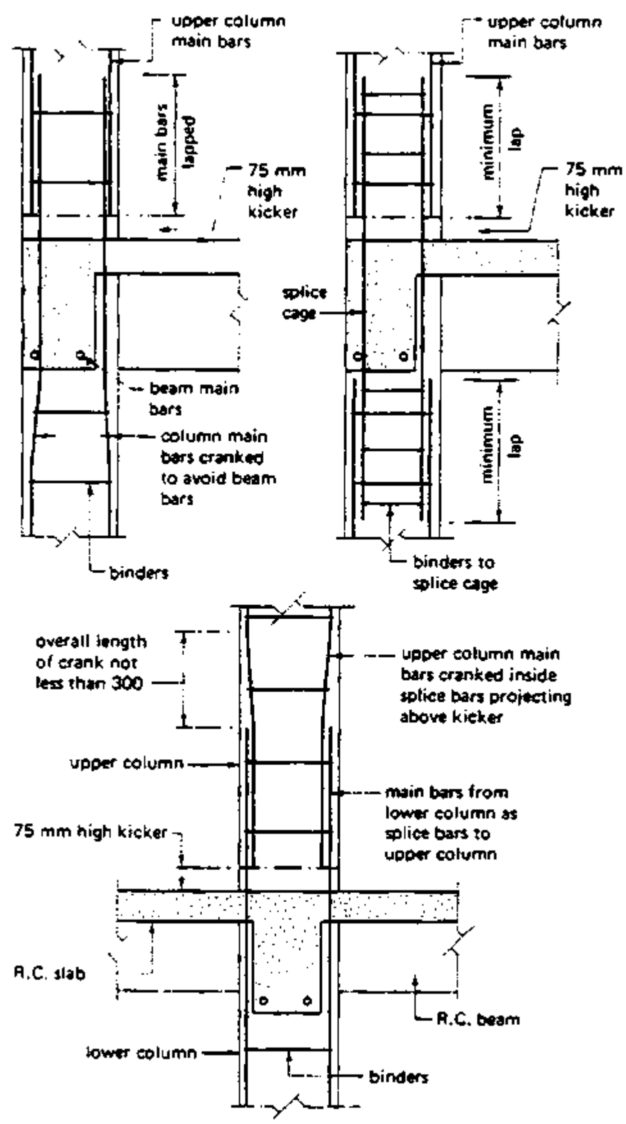

10.5.2.3 Reinforced concrete slabs

A reinforced concrete slab will behave in exactly the same manner as a reinforced concrete beam and it is therefore designed in the same manner. The designer will analyse the loadings, bending moments, shear forces and reinforcement reouirements on a slab strip 1.000 m wide. In pratice the reinforcement will be fabricated to form a continuous mat.For light loadings a mat of welded fabric could be used.

There are three basic forms of reinforced concrete slabs, namely:

1. Flat slab floors or roofs.
2. Beam and slab floors or roofs.
3. Ribbed floors or roofs - see 7. FLOORS.

1) Flat slabs

These are basically slabs contained between two plain surfaces and can be either simcle or complex. The design of the complex form is based upon the slab acting as a plate in which the slab is divided into middle and column strips; the reinforcement being concentrated in the latter strips.

Simple flat slabs can be thick and heavy but have the advantage of giving clear ceiling heights since there are no internal beams.

REINF. CONCRETE SLABS

They are generally economic up to spans of approximately 9.000 m and can be designed to span one way, that is across the shortest span, or to span in two directions. These simple slabs are generally designed to be simply supported, that is, there is no theoretical restraint at the edges and therefore tension is not induced and reinforcement is not required. However, it is common practice to provide some top reinforcement at the supports as anti-crack steel should there, in practice, be a small degree of restraint. Generally this steel is 50 % of the main steel requirement and extends into the slab for 0.2 m of the span. An economic method is to crank up 50% of the main steel or every alternate bar over the support since the bending moment would have reduced to such a degree at this point it is no longer required in the bottom of the slab. If there is an edge beam the top steel can also be provided by extending the beam binders into the slab.

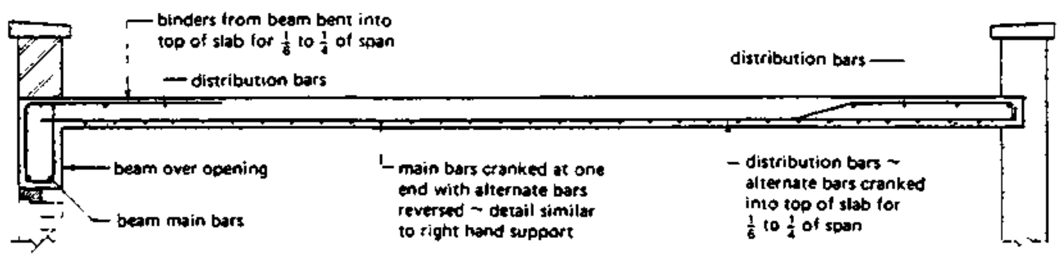

Typical R.C. slab details

Typical R.C. flat slab

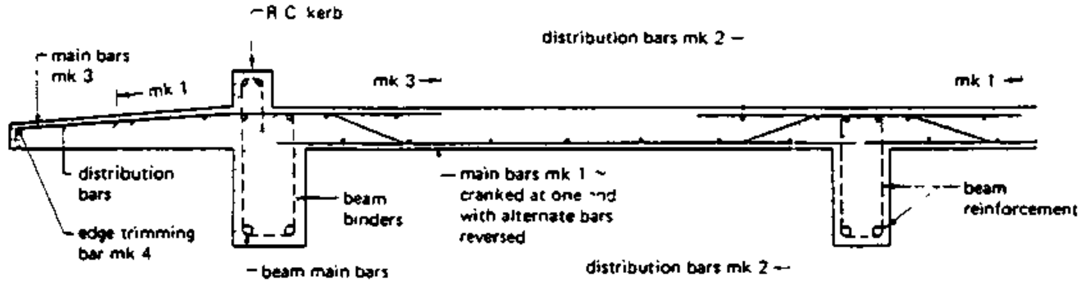

Typical R C beam and slab with cantilever

2) Beam and slab

By adopting this method of design large spans are possible and the reinforcement is generally uncomplicated. A negative moment will occur over the internal suoports necessitating top reinforcement; as with the flat slabs, this can be provided by cranked bars Each bar is in fact cranked but alternate bars are reversed thus simplifying bending and indentification of the bars. Alternatively a separate mat of reinforcement supported on chairs can be used over the supports.

REINFORCEMENT

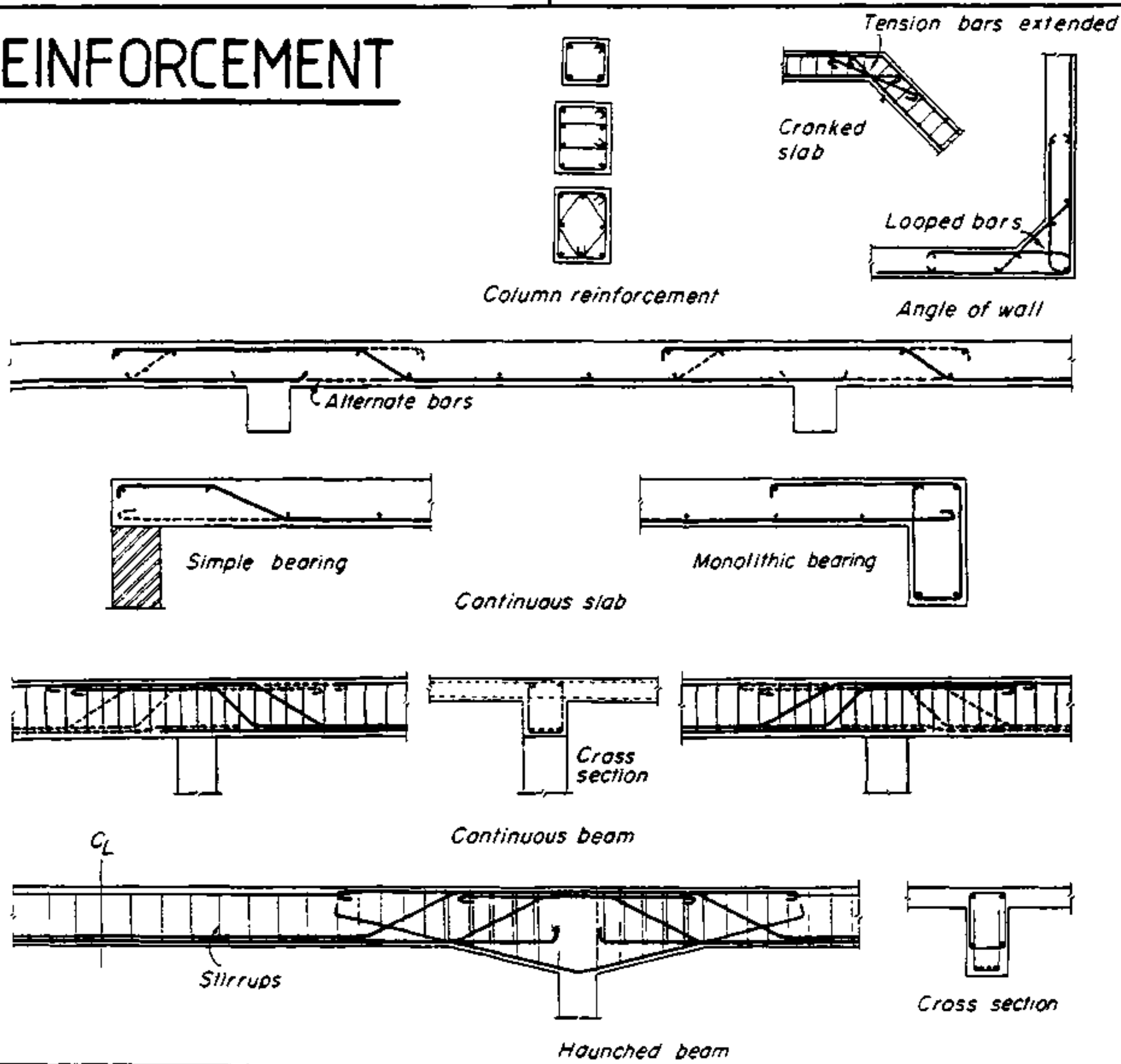

10.5.3 Precast concrete frames

The overall concept of a precast concrete frame is the same as any other framing material. Single or multi-storey frames can be produced on the skeleton or box frame principle. Single and two-storey buildings can also be produced as portal frames, a method generally reserved for advanced level study. Most precast concrete frames are produced as part of a 'system'building and therefore it is only possible to generalise in an overall study of this method of framing.

PRECAST CONCR FRAMES

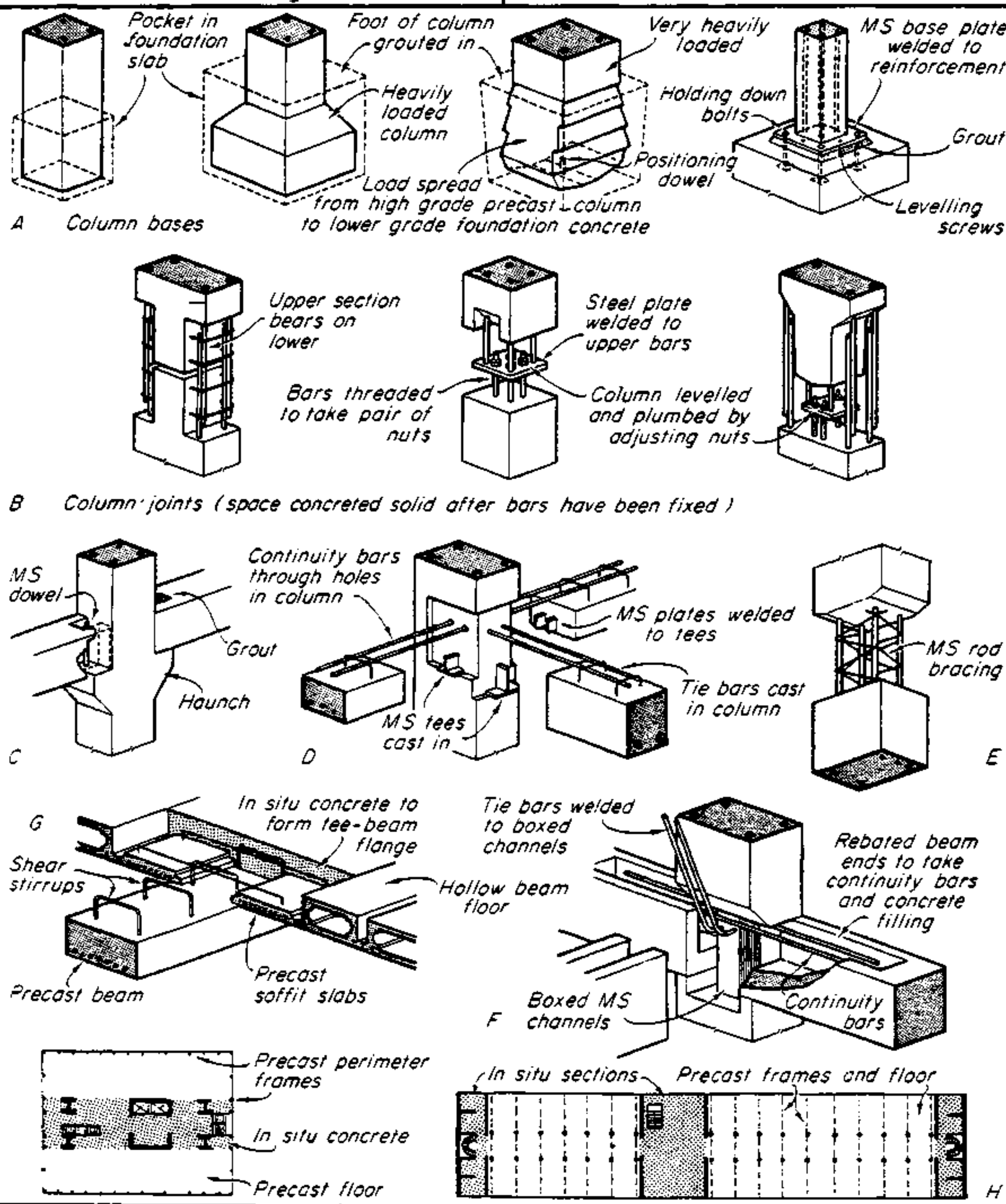

Advantages

1. Mixing, placing and curing of the concrete carried out under factory-controlled conditions which results in uniform and accurate units.
   The casting, being an 'off site' activity, will release site space which would have been needed for the storage of cement and aggregates, mixing position, timber store and fabrication area for formwork and the storage, bending and fabrication of the reinforcement.
2. Repetitive standard units reduce costs: it must be appreciated that the moulds used in precast concrete factories are precision made, resulting in high capital costs. These costs must be apportioned over the number of units to be cast.
3. Frames can be assembled on site in cold weather which helps with the planning, programming and progressing of the building operations. This is important to the contractor since delays can result in the monetary penalty clauses, for late completion of the contract, being invoked.
4. In general the frames can be assembled by semi-skilled labour. With the high turnover rate of labour within the building industry operatives can be recruited and quickly trained to carry out these activities.

Disadvantages

1. System building is less flexible in its design concept than purposemade structures. It must be noted that there is a wide variety of choice of systems available to the designer, so that most design briefs can be fulfilled without too much modification to the original concept.
2. Mechanical lifting plant will be needed to position the units; this can add to the overall contracting costs since generally larger plant is required for precast concrete structures than for in situ concrete structures.
3. Programming may be restricted by controls on delivery and unloading times laid down by the police. Restrictions on deliveries is a point which must be established at the tender period so that the tender programme can be formulated with a degree of accuracy and any overtime payments can be included in the unit rates for pricing.
4. Structural connections between contractual problems. The major points to present both design and contractual problems. The major points to be considered are protection against weather, fire and corrosion, appearance and the method of construction. The latter should be issued as an instruction to site, setting out in detail the sequence, temporary supports required and full details of the joint.

ADVANTAGES | DISADVANTAGES

10.5.3.1 Methods of connections

Foundation connections

Precast columns are connected to their foundations by one of two methods, depending mainly upon the magnitude of the load. For light and medium loads the foot of the column can be placed in a pocket left in the foundation. The column can be plumbed and positioned by fixing a collar around its perimeter and temporarily supporting the column from this collar by using raking adjustable props. Wedges can be used to give added rigidity whilst the column is being grouted into the pocket. The alternative method is to cast or weld on a base plate to the foot of the column and use holding down bolts to secure the column to its foundation in the same manner as described in detail for structural steelwork.

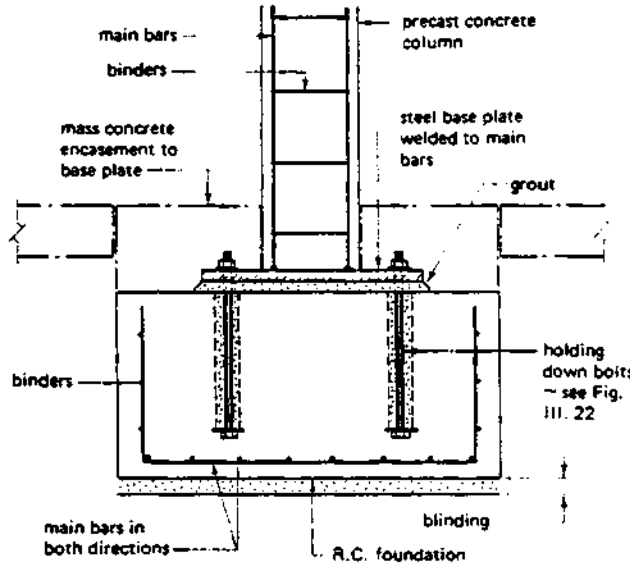

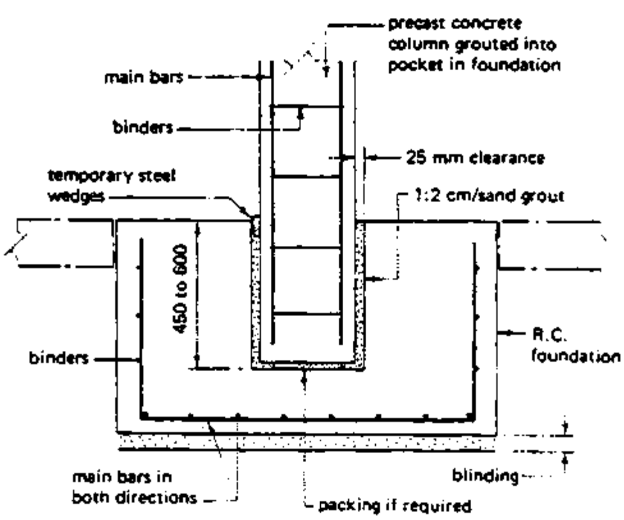

P.C.C. column to foundation connections

Column connections

The main principle involved in making column connections is to ensure continuity and this can be achieved by a variety of methods. In simple connections a direct bearing and grouted dowel joint can be used, the dowel being positioned in the upper or lower column. Where continuity of reinforcement is required the reinforcement from both upper and lower columns left exposed and either lapped or welded together before completing the connection with in situ concrete. A more complex method is to use a stud and plate connection where one set of theaded bars are connected through a steel plate welded to a set of bars projecting from the lower column; again the connection is completed with in situ concrete. Column connections should be made at floor levels but above the beam connections, a common dimension being 600 mm above structural floor level.
The columns can be of single or multi-storey height, the latter having provisions for beam connections at the intermediate floor levels.

METHODS of CONNECTIONS

<u>Beam connections</u>
As with columns, the main emphasis is on continuity within the joint. Three basic methods are used:

1. A projecting concrete haunch is cast on to the column with a locating dowel or stud bolt to fix the beam.
2. A projecting metal corbel is fixed to the column and the beam is bolted to the corbel.
3. Column and beam reinforcement, generally in the form of hooks, are left exposed. The two members are hooked together and covered with in situ concrete to complete the joint.

With most beam to column connections lateral restraint is provided by leaving projecting reinforcement from the beam sides to bond with the floor slab or precast concrete floor units.

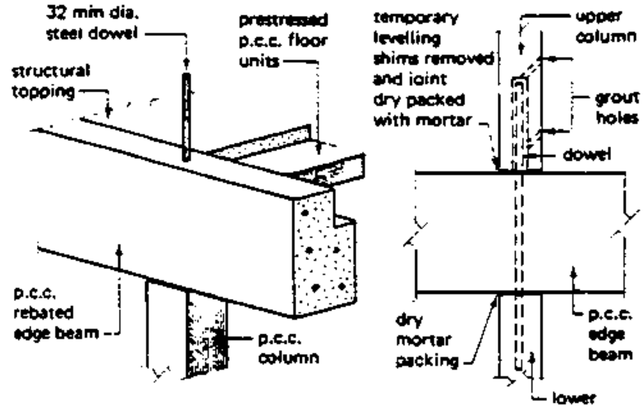

Dowel connection

Typical precast concrete beam connections

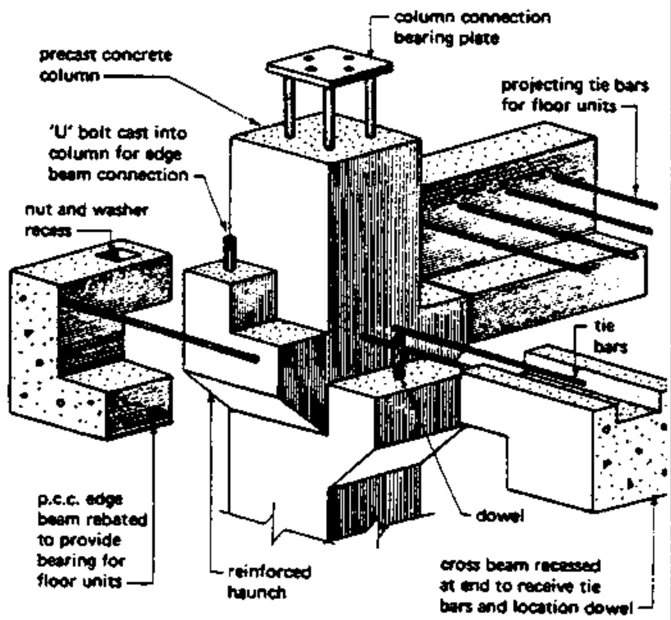

NB beam recess filled with cement grout to complete connection

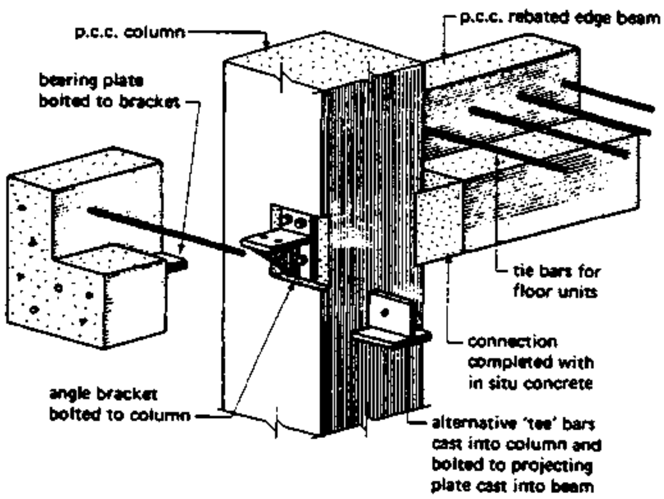

Precast concrete column connections

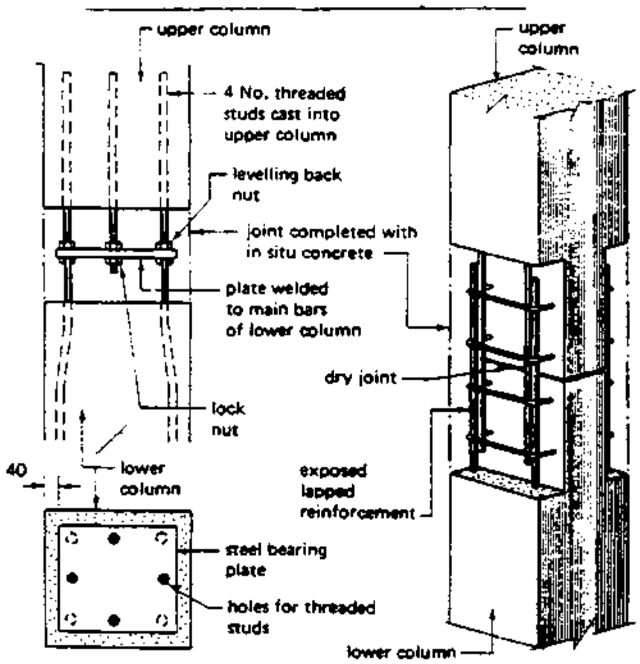

Plate and stud connection

Exposed reinforcement connection

10.5.4 Structural steelwork frames.

STRUCT. STEELWORK FRAMES

Structural steel as a means of constructing a framed building has been used since the beginning of the twentieth century. Structural steel as well as reinforced 'insitu' and precast concrete are used and this means a comparison must be made before any particular framing medium is chosen. The main factors to be considered in making this choice are:

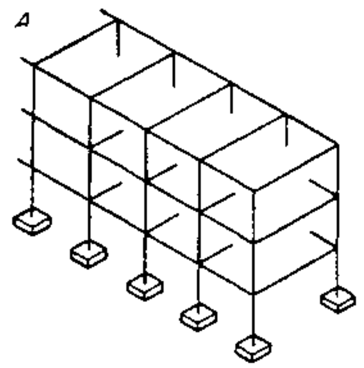

Simple 'cage' frame

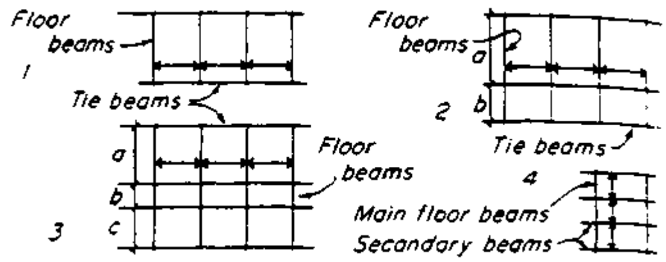

Layout	Member	SPANS Practicable range (m)	Economic range (m)
1	Floor beams	3.65 to 15.25	4.25 to 6.00
	Slab	2.40 to 7.30	3.00 to 4.25
2	Floor beams	3.00 to 15.25 for economy 'a' should not be more than 1 1/5 x 'b'	4.25 to 5.50
	Slab	As for 1 above	
3	Floor beams	a c 3 to 15.25 b 1.8 to 15.25 for economy 'b' should be from 1/8 to 2/3 of (a + c)	4.25 to 5.50 2.40 to 3.00
	Slab	As for 1 above	
4	If spacing of floor beams is greater than 5.50 m secondary beams may be used to keep slab span within the economic limits		

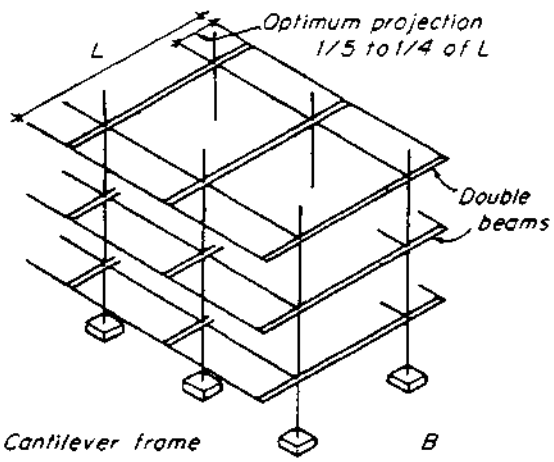

Cantilever frame B

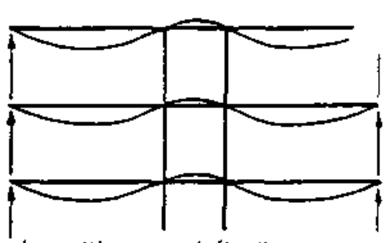

Propped cantilevers - deflection

Propped cantilevers - bending moments

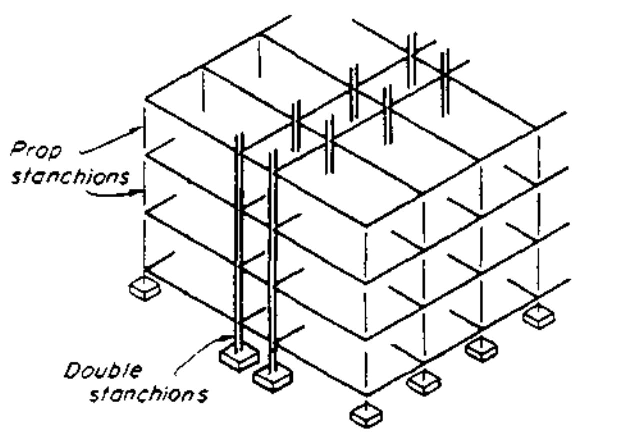

C Propped cantilever frame

COSTS :

Site costs:

The use of a steel or precast concrete frame will enable the maximum amount of prefabrication off site, during which time the general contractor can be constructing the foundations in preparation for the erection of the frame. To obtain the maximum utilisation of a site the structure needs to be designed so that the maximum amount of floor area is achieved. Generally prefabricated section sizes are smaller than comparable in situ concrete members, due mainly to the greater control over manufacture obtainable under factory conditions and thus these will occupy less floor area.

Maintenance costs:

These can be considered in the short or long term but it is fair to say that in most framed buildings the costs are generally negligible if the design and workmanship is sound. Steelwork, because of its corrosive properties, will ned some form of protective treatment but since most steel structures have to be given a degree of fire resistance the fire protective method may well perform the dual function.

Construction costs:

The main factors are design considerations, availability of labour, availability of materials and site conditions. Concrete is a flexible material which allows the designer to be more creative than working within the rigid confines of standard steel sections. However, as the complexity of shape and size increases so does the cost of formwork and for the erection of a steel structure skilled labour is required, whereas activities involved with precast concrete structures can be carried out by the more readily available semi-skilled labour working under the direction of a competent person. The availability of materials fluctuates and only a study of current market trends can give an accurate answer to this problem. Site condiditions regarding storage space, fabrication areas and manoeuvrability around and over the site can well influence the framing method chosen.

10.5.4.1 Structural steel frames

The design, fabrication, supply and erection of a structural steel frame is normally placed in the hands of a specialist sub-contractor. The main contractor's task is to provide the foundation bases in the correct positions and to the correct levels with the necessary holding down fixing bolts. The designer will calculate the loadings, stresses and reactions in the same manner as for reinforced concrete and then select a standard steel member whose section properties meet the design requirements. Standard steel sections are given in BS 4, Part 1 and in the Handbook on Structural Steelwork published jointly by the British Constructional Steelwork Association Ltd. and the Constructional Steel Research and Development Organisation, which gives the following section types:

Universal beams: These are a range of sections supplied with tapered or parallel flanges and are designated by their serial size x mass in kilograms per metre run. To facilitate the rolling operation of universal beam sections the inner profile is a constant dimension for any given serial size. The serial size is therefore only an approximate width and breadth and is given in millimetres.

Joists: A range of small size beams which have tapered flanges and are useful for lintels and small frames around openings. In the case of joists the serial size is the overall nominal dimension.

Universal columns: These members are rolled with parallel flanges and are designated in the same manner as universal beams. It is possible to design a column section to act as a beam and conversely a beam section to act as a column.

Channels: Rolled with tapered flanges and designated by their nominal overall dimension x mass per metre run and can be used for trimming and bracing members or as a substitute for joist sections.

Angles: Light framing and bracing sections with parallel flanges. The flange or leg lengths can be equal or unequal and the sections are designated by the nominal overall leg lengths x nominal thickness of the flange.

T-bars: Used for the same purposes as angles and are available as rolled sections with a short or long stalk or alternatively they can be cut from a standard universal beam or column section. Designation is given by the nominal overall breadth and depth x mass per metre run.

STRUCT. STEEL FRAMES

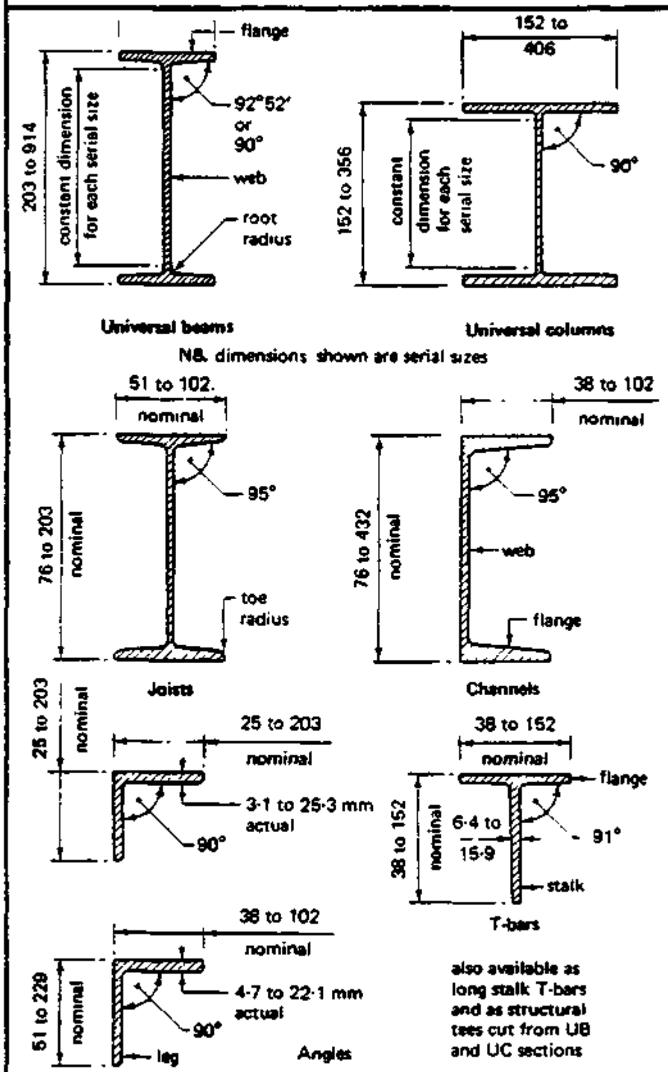

Castellated beams

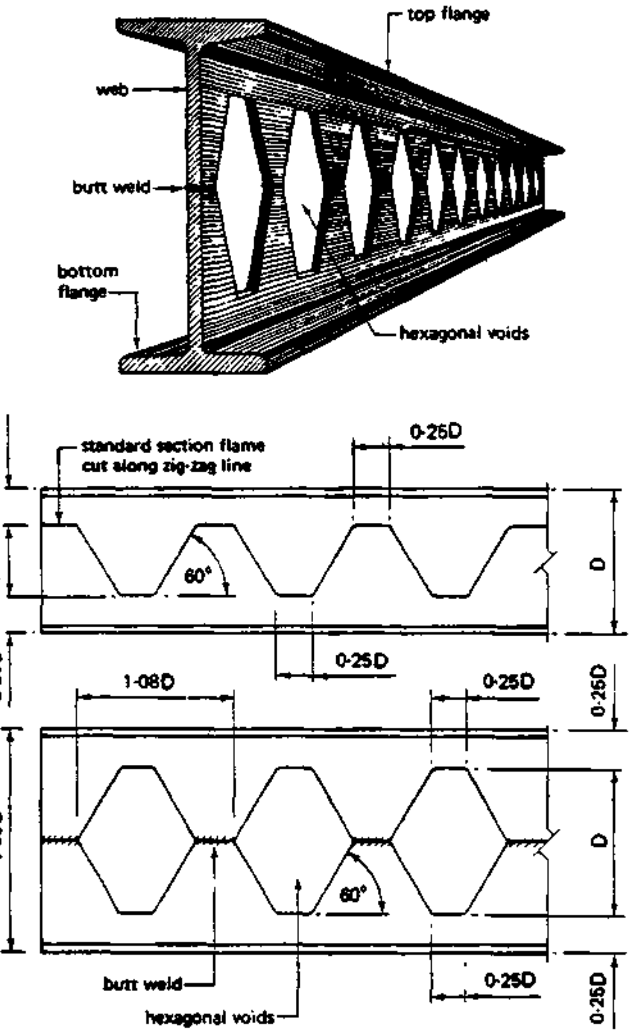

NB castellated joists, universal columns and zed sections also available

CASTEL. UNIVERSAL SECTIONS

10.5.4.2 Castellated universal sections

These are formed by flame cutting a standard universal beam or column section along a castellated line; the two halves so produced are welded together to form an open web beam. The resultant section is one and a half times the depth of the section from which it was cut. This increase in depth gives greater resistance to deflection without adding extra weight but will reduce the clear headroom under the beams unless the overall height of the building is increased. Castellated sections are economical when used to support lightly loaded floor or roof slabs and the voids in the web can be used for housing services. With this form of beam the shear stresses at the supports can be greater than the resistance provided by the web; in these cases one or two voids are filled in by welding into the voids metal blanks.

10.5.4.3 Connections

Connections in structural steelwork are classified as either shop connections or site connections and can be made by using bolts, rivets or by welding.

Bolts

Black bolts: The cheapest form of bolt available, the black bolt can be either hot or cold forged, the thread being machined onto the shank. The allowable shear stresses for this type of bolt are low and therefore they should only be used for end connections of secondary beams or in conjunction with a seating cleat which has been designed and fixed to resist all the shear forces involved. The clearance in the hole for this form of bolt is usually specified as 1.6 mm over the diameter of the bolt. The term black bolts does not necessarily indicate the colour but is the term used to indicate the comparatively wide tolerances to which these products are usually made. BS 4190 gives recommendations for black bolts and nuts for a diameter range of 5 to 68 mm inclusive.

Bright bolts: These have a machined shank and are therefore of greater dimensional accura-

cy fitting into a hole with a small clearance allowance. The stresses allowed are similar to those permitted for rivets. Bright bolts are sometimes called turned and fitted bolts.
High strength friction bolts: Manufactured from high tensile steels and are used in conjunction with high tensile steel nuts and tempered washers. These bolts have generally replaced rivets and black bolts for both shop and site connections since fewer bolts are needed and hence the connection size is reduced. The object of this form of bolt is to tighten it to a predetermined shank tension in order that the clamping force thus provided will transfer the loads in the connecting members by friction between the parts and not by shear in or bearing on the bolts. Generally a torque controlled spanner or pneumatic impact wrench is used for tightening; other variations to ensure the correct torque are visual indicators such as a series of pips under the head or washer which are flattened when the correct amount of shank tension has been reached. Nominal standard diameters available are from 12 to 36 mm with lengths ranging from 40 to 500mm, as recommended in BS 4395.

The holes to receive bolts should always be drilled in a position known as the back mark of the section.
The back mark is the position on the flange where the removal of material to form a bolt or rivet hole will have the least effect upon the section properties. Actual dimensions and recommended bolt diameters are given in the Handbook on Structural Steelwork.
Rivets:
Made from mild steel to the recommendations of BS 4620 rivets habe been generally superseded by bolted and welded connections for structural steel frames. Rivets are available as either cold or hot forged with a veriety of head shapes ranging from an almost semi-circular or snap head to a countersunk head for use when the projection of a snap, universal or flat head would create an obstruction. Small diamter rivets can be cold driven but the usual practice is to drive rivets whilst they are hot. Rivets, like bolts, should be positioned on the back mark of the section; typical spacings are 2 1/2 diameters centre to centre and 1 3/4 diameters form the end or edge to the centre line of the first rivet.
Welding:
Primarily considered as a shop connection since the cost together with the need for inspection, which can be difficult on site, generally makes this method uneconomic for site connections.
The basic methods of welding are oxy-acetylene and electric arc. A blowpipe is used for oxy-acetylene which allows the heat from the burning gas mixture to raise the temperature of the surfaces to be joined. A metal filler rod is held in the flame and the molten metal from the filler rod fuses the surfaces together.
In the alternative method an electric arc is struck between a metal rod connected to a suitable low voltage electrical supply and the surface to be joined which must be earthed or resting on an earthed surface. The heat of the arc causes the electrode or metal rod to melt and the molten metal can be deposited in layers to fuse the pieces to be joined together.

With electrical arc welding the temperature rise is confined to the local area being welded whereas oxy-acetylene causes a rise in metal temperature over a general area.
Welds are classified as either fillet or butt welds. Fillet welds are used to the edges and ends of members and forms a triangular fillet of welding material. Butt welds are used on chamfered end to end connections.

STRUCT. STEEL CONNECTIONS

10.5.4.4 Structural steel connections

Base connections:
Are of one or two forms, the slab or bloom base and the gusset base. In both methods a steel base plate is required to spread the load of the column on to the foundation. The end of the column and the upper surface of the base plate should be machined to give a good interface contact when using a bloom base. The base plate and column can be connected together by using cleats or by fillet welding.

The gusset base is composed of a number of members which reduce the thickness of the base plate and can be used to transmit a high bending moment to the foundations. A machined inferface between column and base plate will enable all the components to work in conjunction with one another, but if this method is not adopted the connections must transmit all the load to the base plate. The base is joined to the foundation by holding down bolts which must be designed to resist the uplift and tendency of the column to overturn. The bolt diameter, bolt length and size of plate washer are therefore important. To allow for fixing tolerances the bolts are initially housed in a void or pocket which is

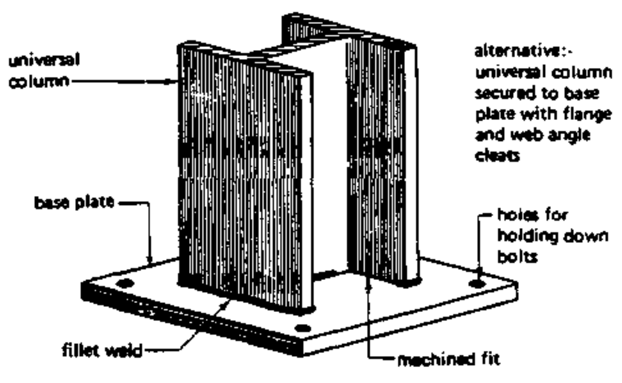

Slab or bloom base

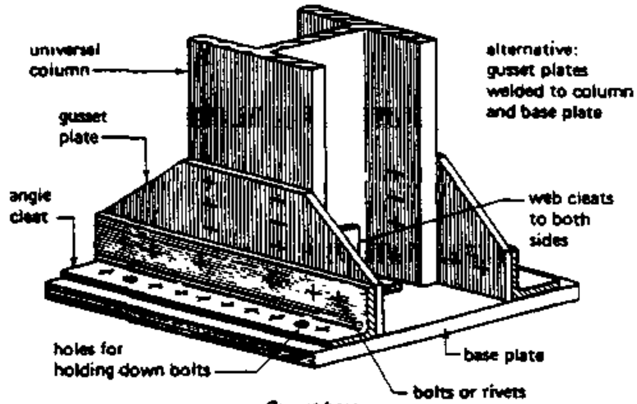

Gusset base

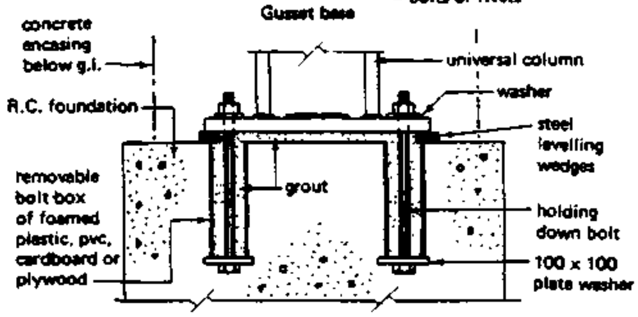

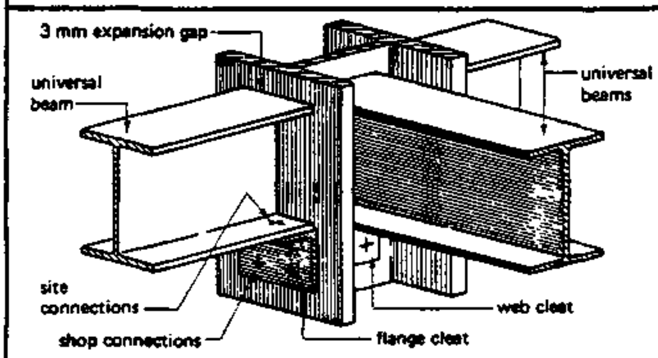

Simple connection

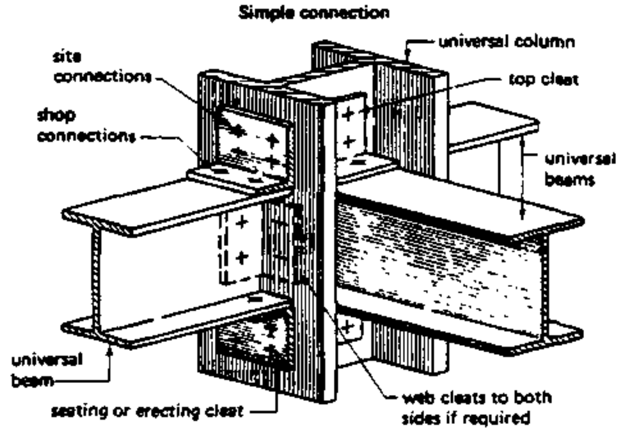

Semi-rigid connection

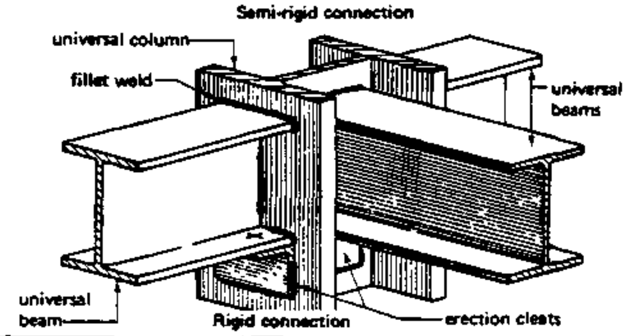

Rigid connection

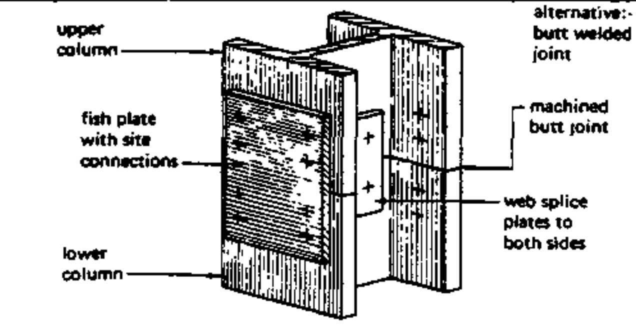

Columns with equal sections

NB for columns of same serial size but of different sections splice is made using 4 No. fish plates fixed on the inside of flanges

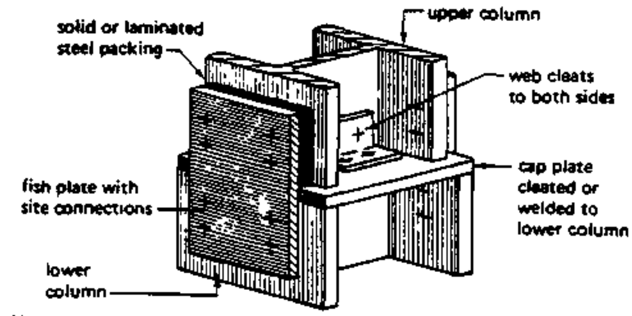

Alternative methods for columns of unequal sec

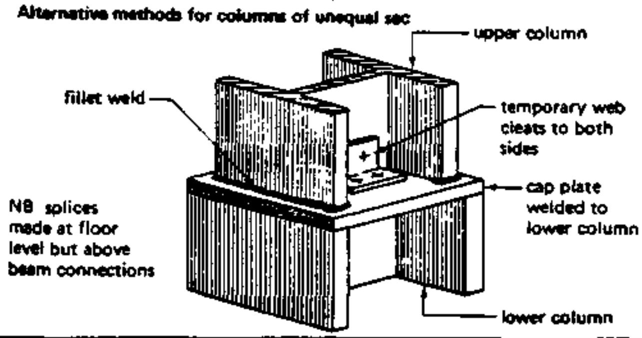

filled with grout at the same time as the base is grouted on to the foundation. To level and plumb the columns steel wedges are inserted between the underside of the base plate and the top of the foundation.

Beam to column connections:
These can be designed as simple connections where the whole of the load is transmitted to the column through a seating cleat. This is an expensive method requiring heavy sections to overcome deflection problems. The usual method employed is the semi-rigid connection where the load is transmitted from the beam to the column by means of top cleats and/or web cleats; vor ease of assembly an erection cleat on the underside is also included in the connection detail. A fully rigid connection detail, which gives the greatest economy on section sizes, is made by welding the beamt to the column. The uppermost beam connection to the column can be made by the methods described above or alternatively a bearing connection can be used, which consists of a cap plate fixed to the top of the column to which the beams can be fixed either continuously over the cap plate or with a butt joint.

Column splices: These are made at floor levels but above the beam connections. The method used will depend upon the relative column sections.

Beam to beam connections:
The method used will depend upon the relative depths of the beams concerned. Deep beams receiving small secondary beams con have a shelf angle connection whereas other depths will need to be connected by web cleats.

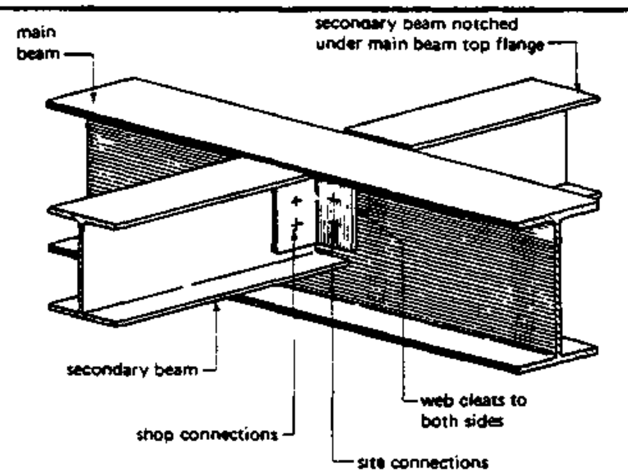

Beam to beam connections

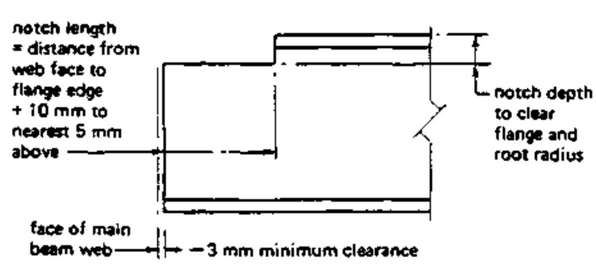

Notch detail

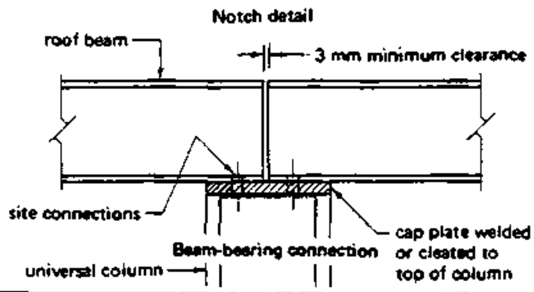

10. FRAMED STRUCT.	BUILDING FRAMES	BUILDING CONSTR.
compiled: D.VOLKE		LECTURE
DEC. '82		CET 6031/1 1o 5 26
TCA TECHNICAL COLLEGE ARUSHA CHUO CHA UFUNDI ARUSHA	CIVIL ENGINEER. DEPARTMENT	26

10.5.4.5 Frame erection

This operation will not normally be commenced until all the bases have been cast and checked since the structural steelwork contractor will need a clear site for manoeuvring the steel members into position. The usual procedure is to erect two storeys of steelwork before final plumbing and levelling takes place.
The grouting of the base plates and holding down bolts is usually left until the whole structure has been finally levvelleo and plumbed. The grout is a neat cement or cement/sand mixture depending on the gap to be filled:

12 to 25mm gap - stiff mix of neat cement;
25 to 50mm gap - fluid mx of 1:2 cement/sand and tamped;
over 50mm gap - stiff mix of 1:2 cement/sand and rammed.

With large base plates a grouting hole is sometimes included but with smaller plates three sides of the base plate are sealed with puddle clay, bricks or formwork and the grout introduced through the open edge on the fourth side. To protect the base from corrosion it should be encased with concrete up to the underside of the floor level giving a minimum concrete cover of 75mm to all the steel components.

10.5.4.6 Fire protection of steelwork

Part E of building regulations together with Schedule 8 gives the minimum fire resistance periods and methods of protection for steel structures according to the purpose group of the building and the function of the member. The traditional method is to encase the steel section with concrete, which requires formwork and adds to the loading of the structure. Many 'dry' techniques are available but not all are suitable for exposed conditions.

10.5.5 Timber frames

Skeleton frames constructed in timber may be fabricated from solid timber sections, built-up sections or glued and laminated sections.

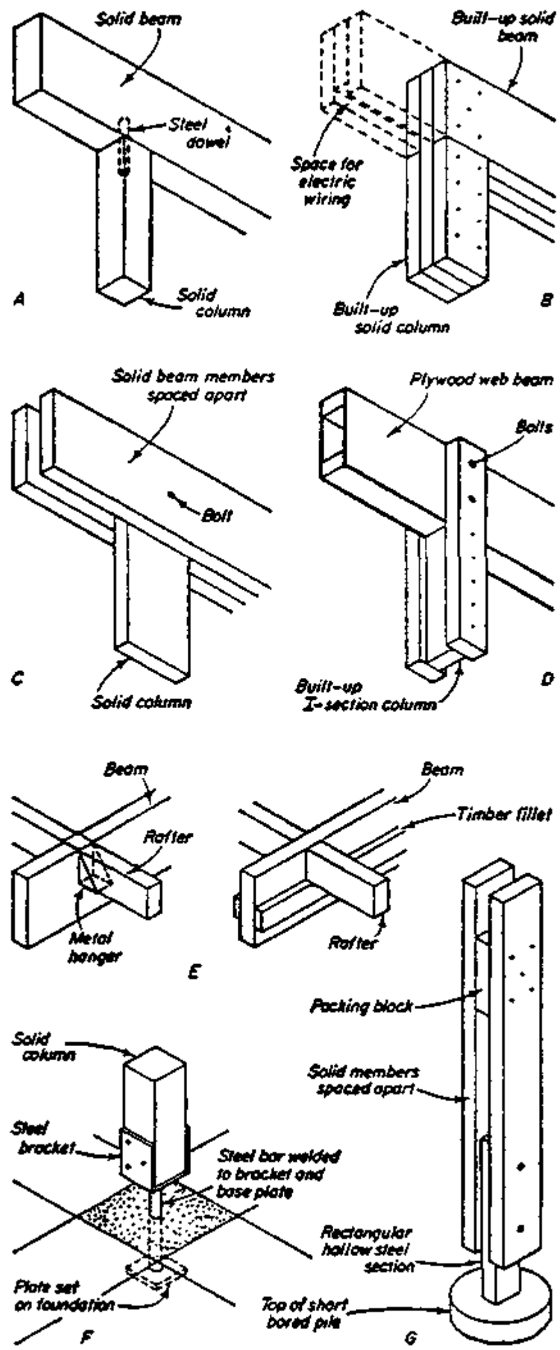

Timber beams and columns

10.5.5.1 Clumns and beams

Solid square or rectangular sections are generally the most economical in cost, but where members beyond the available sizes and lengths of solid timber are required it is necessary to form them by combining a number of smaller sections of timber. This may be accomplished by nailing or bolting together several pieces to form built-up solid sections. Apart from obtaining the required sizes for large members there are advantages in building up solid sections from smaller pieces since these are easier to obtain and to season properly without checking and they may be built-up in ways that minimise warping and permit rigid connections between columns and beams.

In the case of built-up column sections involving butt joints in the length it is essential that the abutting faces be carefully machined and the joints staggered. Built-up box and I-sections used as columns are stiffer than a solid section for a given timber content and are particularly suitable for tall columns. Another method of increasing the stiffness of lightly loaded columns is to provide the bearing area in two parallel members spaced apart by packing blocks at intervals and connected by nails, bolts or glue.

Built-up solid beams are normally built up of vertical pieces nailed or bolted together, nailing being satisfactory for beams up to about 250mm in depth, although these may require the

TIMBER FRAMES

use of bolts at the ends if shear stresses are high. Where the imposed loading is light beams may be built up with solid flanges and plywood webs nailed or glued, or glued and nailed, together. Such web beams, compared with solid beams, are very stiff relative to the amount of timber in them, especially those with two webs forming a box section and result in low dead/live load ratios. The thin webs necessitate stiffeners at intervals along the length of the beam. Increased shear resistance near the supports may be obtained by closer spacing of the stiffeners at the ends of the beam. The fire resistance of

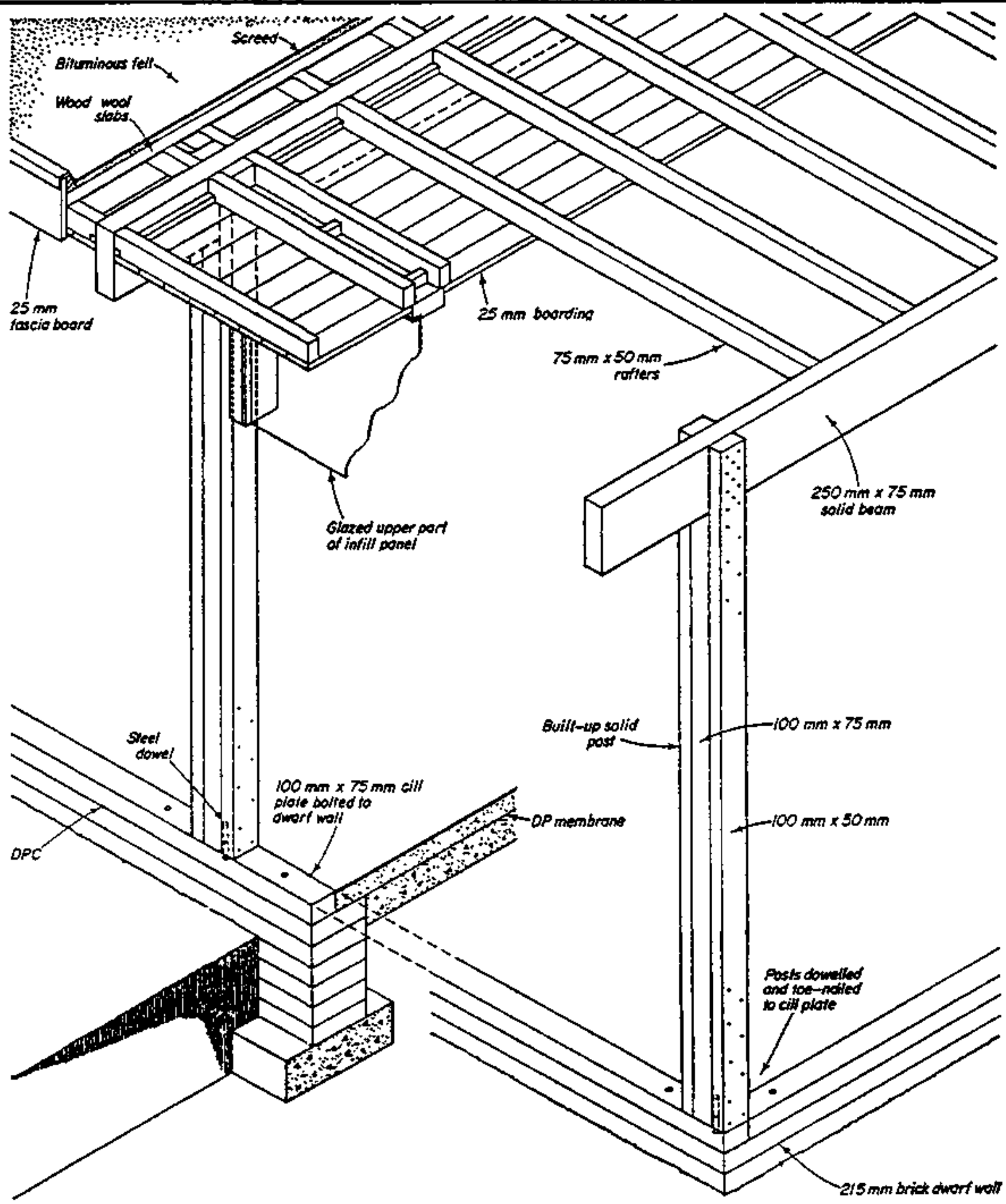

Timber frame with built-up solid posts and solid beams

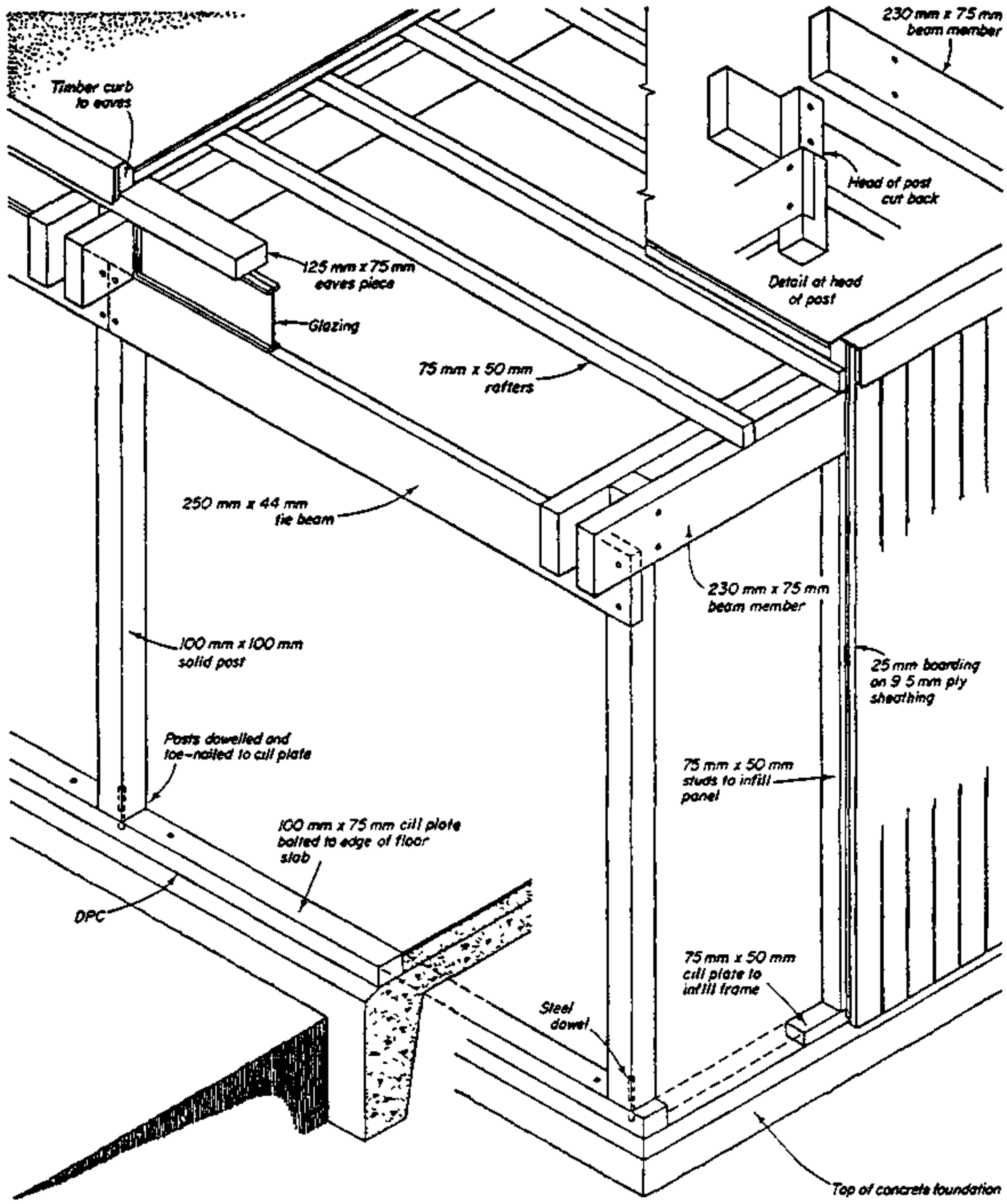

Timber frame with solid posts and spaced solid beams

web beams such as these is very much lower than that of solid or glued and laminated timber beams by reason of the thinness of the parts. If exposed to the weather the surface veneer of the plywood webs of this type of beam tends to check. Glued and laminated sections, commonly called glulam sections, consist of timber laminations glued together to form square or rectangular sections and, for large span beams, I-sections. They are more expensive than solid or built-up sections but permit the use of higher permissible stresses in their design and are, therefore, suitable where loads are great or spans are large.

CONNECTIONS

10.5.5.2 Connections
Connections between beams and columns are made with nails, bolts, dowels and cleats according to the type of members.

Those between solid and glulam beams and columns are made by metal dowels with or without side fixing plates, the latter providing a stiffer connection, or simply by side-nailing the beam to the column. Built-up members are connected by nails, bolts or bolts and timber connectors. Built-up solid sections or spaced solid members permit rigid connections to be made by passing one member, or part of it, through the other.

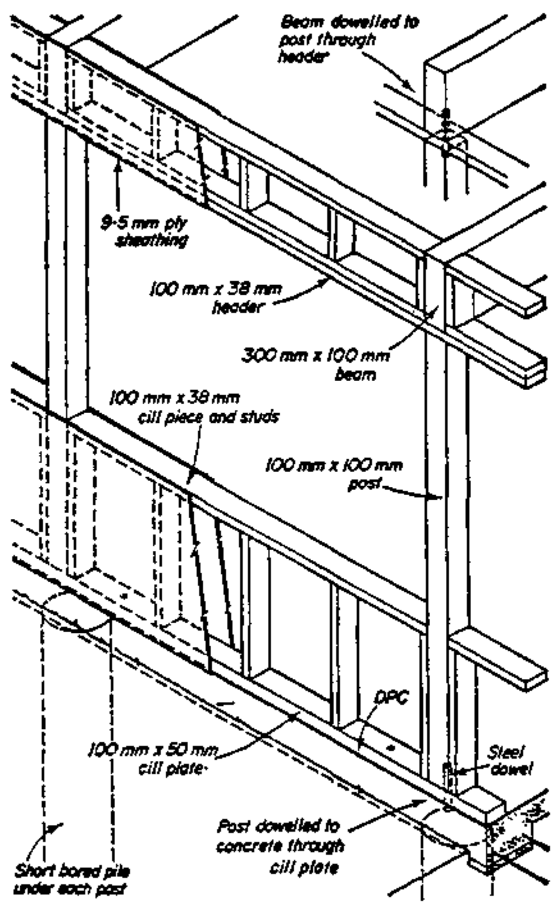

Timber frame with solid posts and beams

Spaced beams permit the use of smaller sections than would be required for a single solid member. The solid built-up beam, however, has the advantage that one piece restrains the warping of the others.
Beam to beam connections are made by means of metal hangers or by metal cleats bolted or screwed to the beams, Rafters and joists may be supported by hangers or timber fillets.
Column base connections are made in various ways depending on the relation of the column to the remainder of the building fabric. Free standing external columns normally are raised of the ground to isolate them from ground moisture. This may be done by means of a concrete stool or block with a damp-proof layer between the timber and concrete, the column being fixed in position by a steel dowel or by straps and bolts. Alternatives to this which isolate the timber from the ground and also fix the column in position are shown in the figure. These three methods also hold the post against wind uplift, the effect of which can be considerable when the roof is flat and the structure is light. External perimeter columns normally bear on a continuous timber cill plate which is bolted to the concrete floor slab or perimeter dwarf wall and which also carries the infilling wall panels. If the loading on the column and the nature of the soil necessitates it a small pier and foundation slab or a short bored pile must be constructed under the column position.
Internal columns usually bear directly on the floor slab, thickened to form a base if necessary, and are secured in position by a metal dowel.

10.5.5.3 Building frames in timber.

Most small-scale timber framed structures take the form of post and beam construction in which resistance to racking distortion of the frame under working load is provided by the infill panels. A proportion of solid or near-solid wall panels is, therefore, necessary to ensure stability and can normally be provided. The choice of connection and form of junction between the members of the frame in most cases thus depends largely on the degree of rigidity required for erection purposes before the panels are fixed.
The figure shows post and beam frames constructed with built-up solid posts and single solid beams, the latter passing between the outer column pieces, to which they are secured by nailing, and bearing on the centre piece. The foot of each post bears on the timber cill plate bolted to the dwarf wall as for frame wall construction. Bearings for the rafters are provided by fillets nailed to the beam sides. The roof extends beyond the wall panels the heads of which are secured to noggings between two closely spaced rafters.
The frames are constructed with solid posts and spaced solid beams. The latter bear on shoulders formed at the head of the posts and are secured by two bolts to produce a rigid connection. In this example some lateral rigidity results from the provision of a deep tie beam immediately below the bearings of the main beams, this also being set into the face of the posts and bolted to them. This tie, together with the substantial member fixed to the paired beams above the glazing and some solid panels under some windows in the wall panels, would provide lateral rigidity to the structure.
Since a dowelled connection does not produce a rigid post to beam junction rigidity must be provided by wall panels parallel to the beams. The header running over the tops of the posts provides some rigidity to the frames during erection and ultimate structural rigidity is provided by the top and bottom solid panels forming an opening for glazing. In this example the foundations are short bored piles placed under each post.
The figure shows a double height house frame with the single floor raised above ground level.
The posts are solid and the main bearing beams and lateral tie beams are formed as spaced beams with pairs of deep but relatively thin solid members. The depth of the junction between posts and beams and the use of three bolts at each connection produces stiff joints and rigidity in both directions. Packing blocks at the ends and centre of all beams provides the necessary stiffening against lateral buckling of the thin members. Further stiffening of the frame would be provided by enclosing one of the ground level bays on all four sides with solid panels.
The floor and roof consist of boarded timber joists and rafters made up into prefabricated panels bearing on top of the beams. Prefabricated wall panels are secured to the edges of roof and floor.

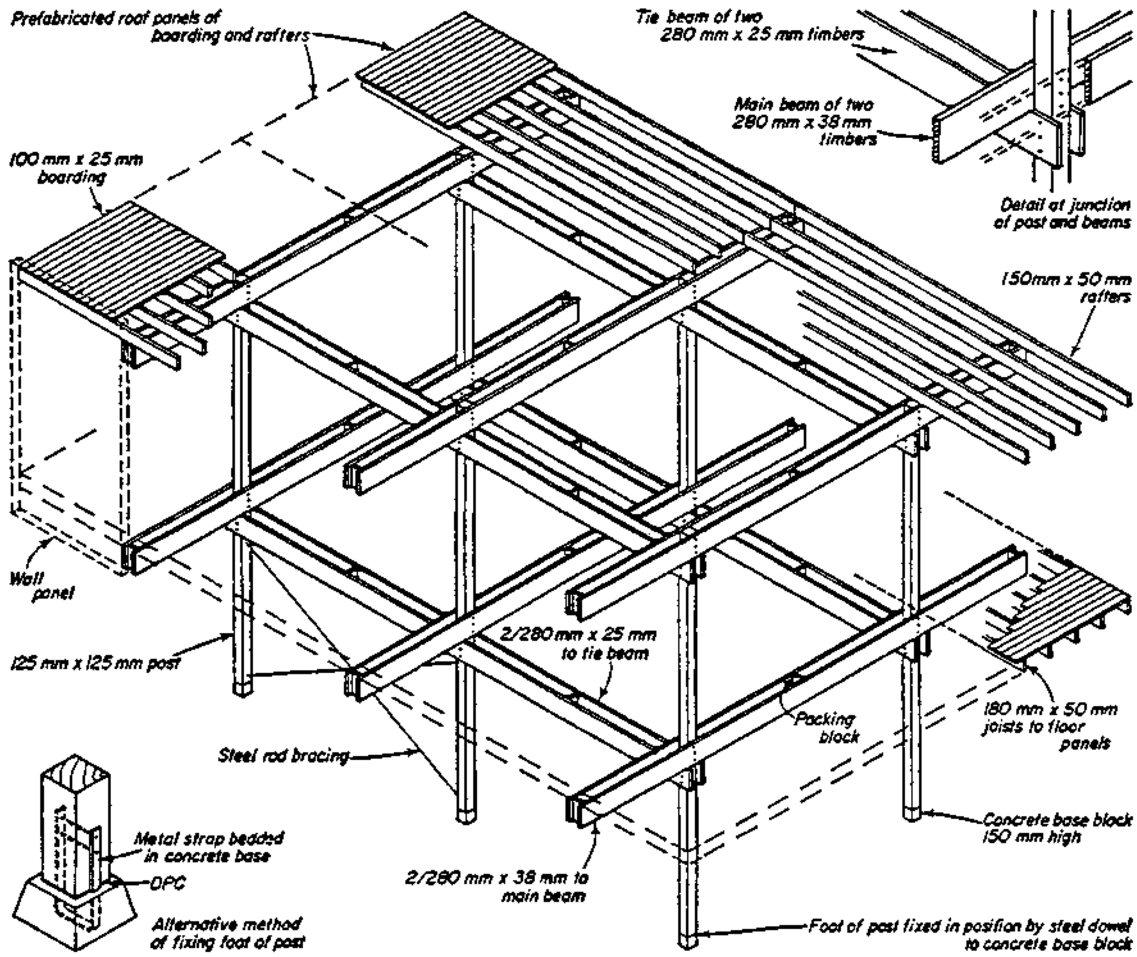

Two-storey timber frame

PREFABRICATION

10.5.5.4 <u>Prefabrication</u>

The design of the last structure and its panel components permits full prefabrication of the parts and assembly by nut-and-bolt is simple and rapid. It is, however, a 'one-off' building. In any form of system building for alarge market provision must be made for the variety of situations produced by arying spans and loading of beams and by single or two-storey buildings, by designing ranges of components with a minimum of variations in construction and dimensions which may be applied to a maximum number of building situations. The figure shows solutions to some aspects of the problem which have been worked out in practice. (A,B, and C) illustrate column types in the same system, all of standard width. (A) is for the light loads and consists of two relatively thin but identical members of sufficient cross-sectional area to take the maximum design load for which they are intended, blocked apart to prevent them buckling. (B) is a built-up solid version with increased bearing area to take greater loads, the outer members and the overall dimensions being the same as in (A). (C) is an extension of (B) to provide further bearing area by the addition of a solid piece glued to (B), to receive which the rebate in the latter is formed. Thus by this means provi-

sion is made for a range of loading conditions by a minimum number of component parts with a standard width dimension.
Variations in span and loading of beams may be met by increased depth and by change of form while maintaining a standard width. Normal timber sizes set a limit to the depth of solid timber beams but deeper beams may be formed as plywood box beams as in (E) where imposed loads are light or by laminating thin boards in glulam construction as in (D).
The three-piece built-up solid column shown in (E) permits a splice connection to be formed for two_story construction, by a simple variation of standard storey-height column components.
The recess to accommodate the beam at the head of a standard column, formed by the omission of the centre piece at that point, is extended by the use of longer outer members. This raceives the splice formed at the foot of the upper column by the use of shorter outer members. In this example the end of the ply box-beam is formed as a deep tenon which is accomodated by the column recess and bears on top of the centre piece. The connection is secured by bolts which pass through the edge members of the infill panels to hold them in position.
In single-storey framed systems the seating and fixing of beams may be accomplished by making the column shorter than the adjacent infill panels and using the latter to fix the beam in position as in (G) which requires the fixing of the panels prior to setting the beam in position. In (F) the built-up column has two thinner outer pieces which carry up the full height and serve to hold the beam in position by nailing until the infill panels are offered up and bolted in position.

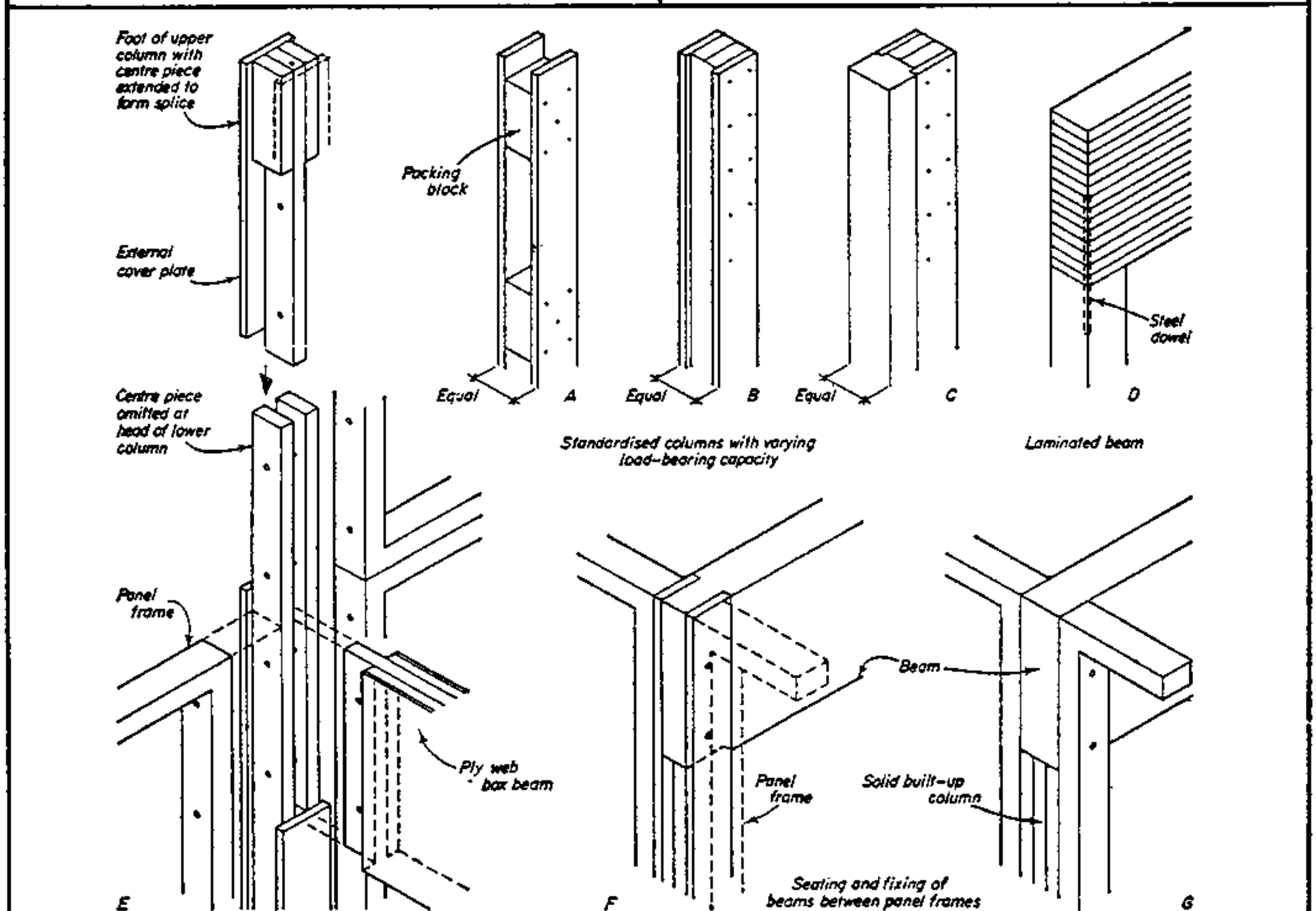

Standardised columns with varying load-bearing capacity

Laminated beam

Seating and fixing of beams between panel frames

10.6 PORTAL FRAMES

10.6.1 Theory

- A portal frame may be defined as a continous or rigid frame.
- The basic characteristic is that of a rigid or restrained joint between the supporting member (column) and the spanning member (beam).
- The object of this continuity is to reduce the bending moment in the spanning member by allowing the frame to act as one structural entidy, thus distributing the stresses throughout the frame.
- In a conventional simply supported beam (over a large span) an excessive bending moment occurs at mid-span.

This necessiates a deep heavy beam or a beam shaped to give a large cross section at mid-span. Alternatively a deep cross member of lattice struts and ties could be used. The main advantage of a simply supported frame lies in the fact that the column loading is axial and therefore no bending is induced into the supporting members

This may ease design problems (since it would be statically determinate), but does not necessarily produce an economic structure.

Furthermore the use of a portal frame eliminates the need for a lattice of struts and ties within the roof space, giving a greater usable volume to the structure and generally a more pleasing internal appearance.

- In a RIGID FRAME the transfer of stresses from the beam to the column will require special care in the design of the joint between the members.

Similarly the horizontal thrust and/or the rotational movement at the foundation connection needs careful consideration. Methods to overcome excessive forces at the foundation are:

1. Reliance on the PASSIVE PRESSURE of the soil surrounding the foundation.
2. Inclined foundations so that the curve of pressure is normal to the upper surface thus tending to induce only compressive forces.
3. A tie bar or beam between opposite foundations.
4. Introducing a hinge or pin joint where the column connects to the foundation.

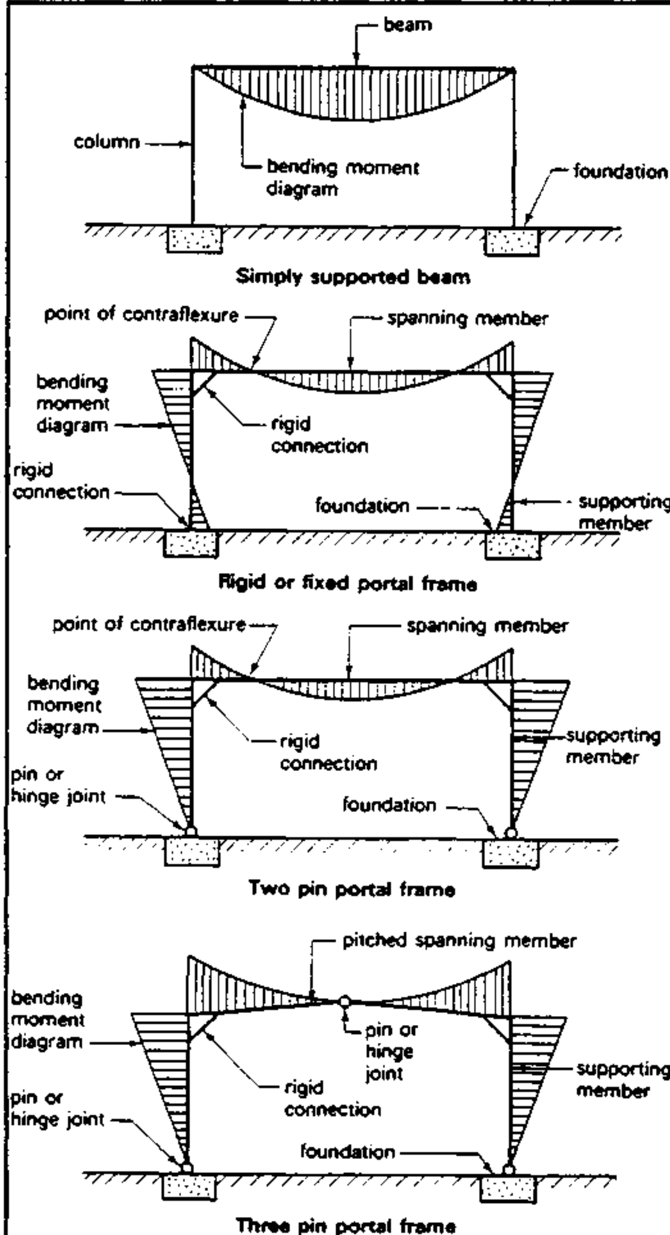

Portal frames - comparison of bending moments

- HINGES

  Portal frames are usually connected directly to their foundation bases, forming rigid or unrestrained joints.

The rotational movement caused by wind pressures, tending to move the frames and horizontal thrusts of the frame loadings are generally resisted by the size of the base and the passive earth pressures. When the frames start to exceed 4 m in height and 15 m in span the introduction of a hinged or pin joint at the base connection should be considered.

A hinge is a device which will allow free rotation to take place at the point of fixity but at the same time will transmit both load and shear from one member to another.

They are sometimes called: pin joints, unrestrained joints, non-rigid joints.

Since no bending moment is transmitted through a hinged joint the design is simplified by the structural connection becoming statically deteminate.

(In practice it is not always necessary to provide a true PIVOT where a hinge is included but to provide just enough movement to ensure the rigidity at the connection is low enough to overcome the tendency of rotational movement.)

Hinges can be introduced into a portal frame design at the base connections and at the centre or apex of the spanning member, giving three basic forms of portal frames:

1. Fixed or rigid portal frames- all connections between frame members are rigid.
   - The bending moment will be of lower magnitude and more evenly distributed than other forms.
   - Used for small to medium size frames where the moments transfered to the foundations will be excessive.
2. Two pin portal frame - hinges are used at the base connection to eleminate the tendency of the base to rotate.
   - The bending moments resisted by

THEORY

the supporting members will be greater than those in the rigid portal frame.
   - Main use is where high base moments and weak ground conditions are encountered.
3. Three-pin portal frames - this form has hinged joints at the base connections and at the centre of the spanning member.
   - The effect of the third hinge is to reduce the bending moment in the spanning member but to increase deflection.
   - To overcome this latter disadvantage a deeper beam must be used or alternatively the spanning member must be given a pitch to raise the apex wall above the eaves level.

Two other advantages of the three-pin portal frame are that the design is simplified since the frame is statically determinate and on site they are easier to erect, particularly when preformed in sections.

Most portal frames are made under factory controlled conditions - off site - which gives good dimensional and quality control but can create transportation problems.

To lessen this problem and that of site erection splices may be used. These can be positioned at the points of contraflexure, junction between spanning and supporting members and at the crown or apex of the beam.

Portal frames can take the form of the usual roof profiles for single or multispan buildings.

The frames are generally connected over the spanning members with purlines designed to carry lightweight roof coverings or deckings.

The walls can be of similar material fixed to sheeting rails attached to the supporting members or alternatively clad with brick or infill panels.

CONCRETE PORTAL FRAMES

10.6.2 Concrete portal frames

Concrete portal frames are invariably manufactured from high quality precast concrete suitably reinforced.
In the main the use of precast concrete portal frames is confined to low pitch (4^0 to 22 1/2^0) single span frames but two storey and multi-span frames are available, giving a wide range of designs from only a few standard components.

The frames are generally designed to carry a lightweight (34 kg/m^2 maximum) roof sheeting or decking fixed to precast concrete purlins.

Wall finishes can be varied and intermixed since they are non-load bearing and therefore have to provide only the degree of resistance required for fire, thermal and sound insulation, act as a barrier to the elements and resist positive and negative wind pressures. Sheet claddings are fixed in the traditional manner, using hook bolts and purlins, sheet wall claddings are fixed in a similar manner to sheeting rails of precast concrete or steel spanning between or over the supporting members. Brick or block wall panels either of solid or cavity construction can be built off a ground beam constructed between the foundation bases or alternatively they can be built off the ground floor slab. It must be remembered that all such claddings must comply with any relevant Building Regulations.
Foundations and fixings.
The foundations for a precast concrete portal frame usually consist of a reinforced concrete isolated base or pad designed to suit loading and ground bearing conditions. The frame can be connected to the foundations by a variety of methods:

1. Pocket connection -
   the foot of the supporting member is located and housed in a void or pocket formed in the base so that there is an all round clearance of 25 mm to allow for plumbing and final adjustment before the column is grouted into the foundation base.
2. Base plate connection -
   a steel base plate is welded to the main reinforcement of the supporting member, or alternatively it could be cast into the column using fixing

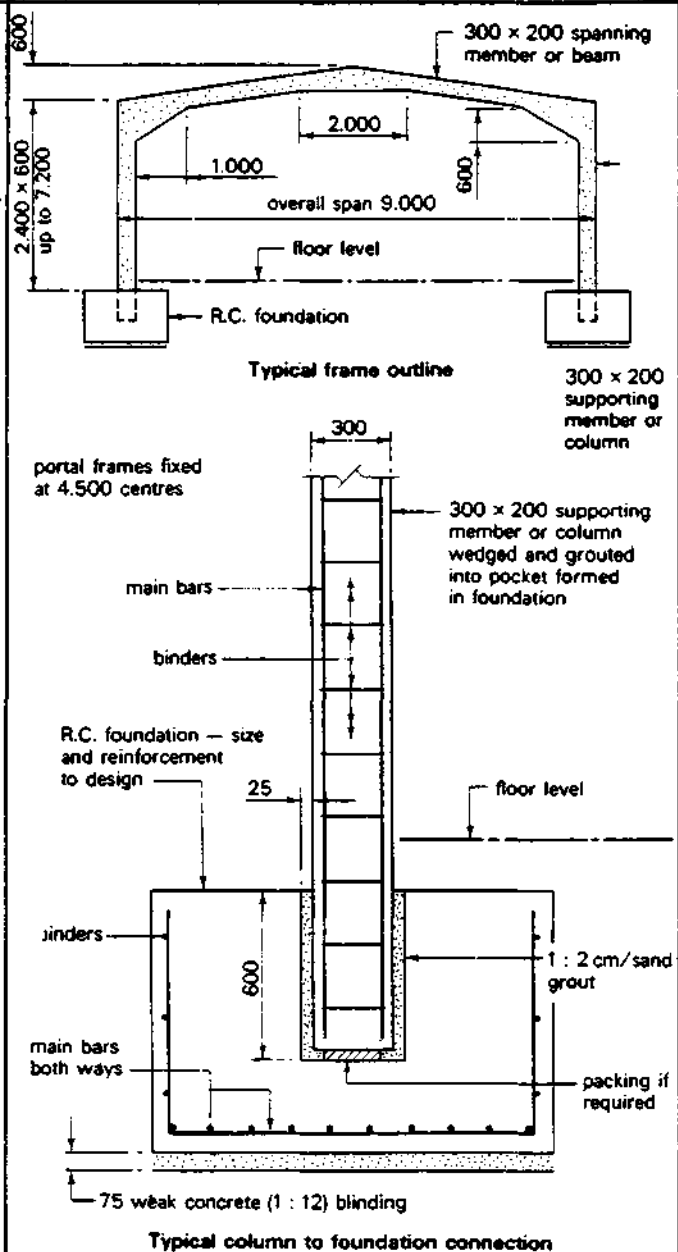

Typical single span pcc frame

lugs welded to the back of the base plate. Holding down bolts are cast into the foundation base; the erection and fixing procedure follows that described for structural steelwork.

3. Pin joint or hinge connection - a special base or bearing plate is bolted to the foundation and the mechanical connection is made when the frames are erected.

CONCRETE PORTAL FRAMES

The choice of connection method depends largely upon the degree of fixity required and the method adopted by the manufacturer for his particular system.

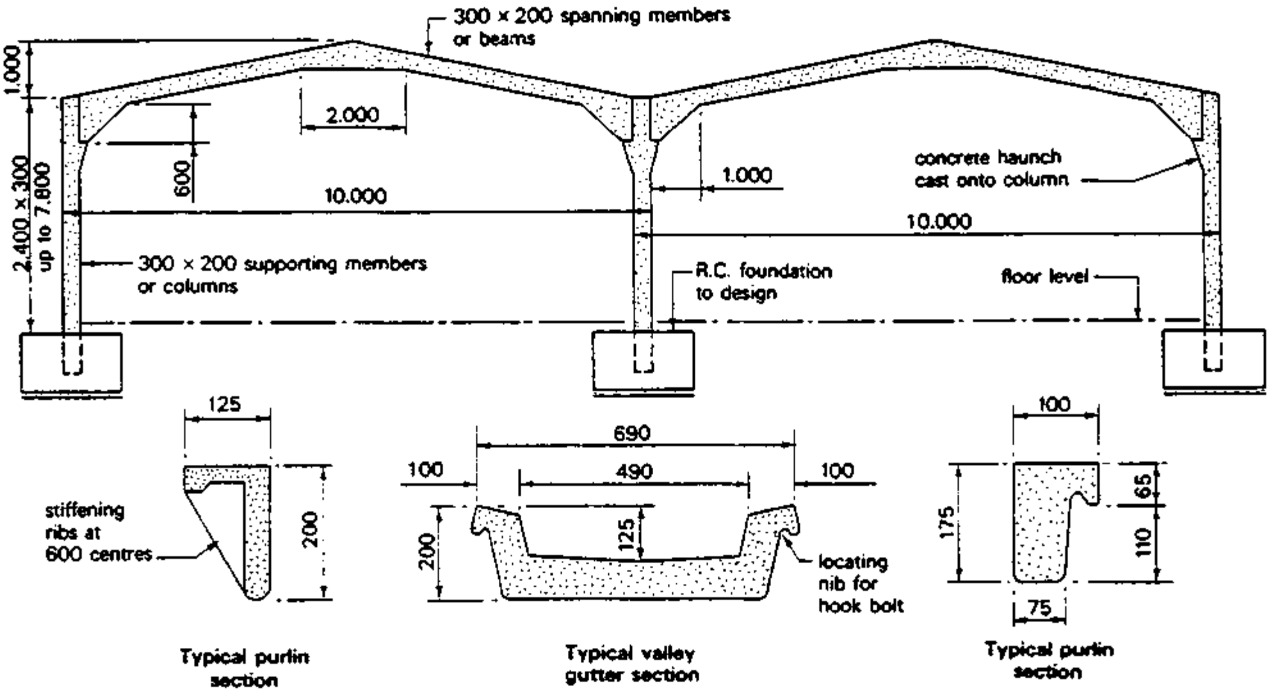

Fig III.3 Typical multi-span precast concrete portal frame

Advantages
The main advantages of using precast concrete portal frames can be enumerated thus:

ADVANTAGES

1. Factory production will result in accurate and predictable components since the criteria for design, quality and workmanship recommended in CP 110 can be more accurately controlled under factory conditions than casting components in situ.
2. Most manufacturers produce a standard range of interchangeable components which, within the limitations of their systems, gives a well-balanced and flexible design range covering most roof profiles, single span frames, multi-span frames and lean-to roof attachments. By adopting this limited range of members the producers of precast portal frames can offer their products at competitive rates soupled with reasonable delivery periods.
3. Maintenance of precast concrete frames is not usually required unless the building owner chooses to paint or clad the frames.

4. Precast concrete products have their own built-in natural resistance to fire and therefore no fire-resistant treatment is required. By varying the cover of concrete over the reinforcement most frames up to 24.000 m span are given a 1-hour fire resistance and frames exeeding this span are rated at 2-hour fire resistance.
5. The wind resistance of precast concrete portal frames to both positive and negative pressures is such that wind bracing is not usually required.

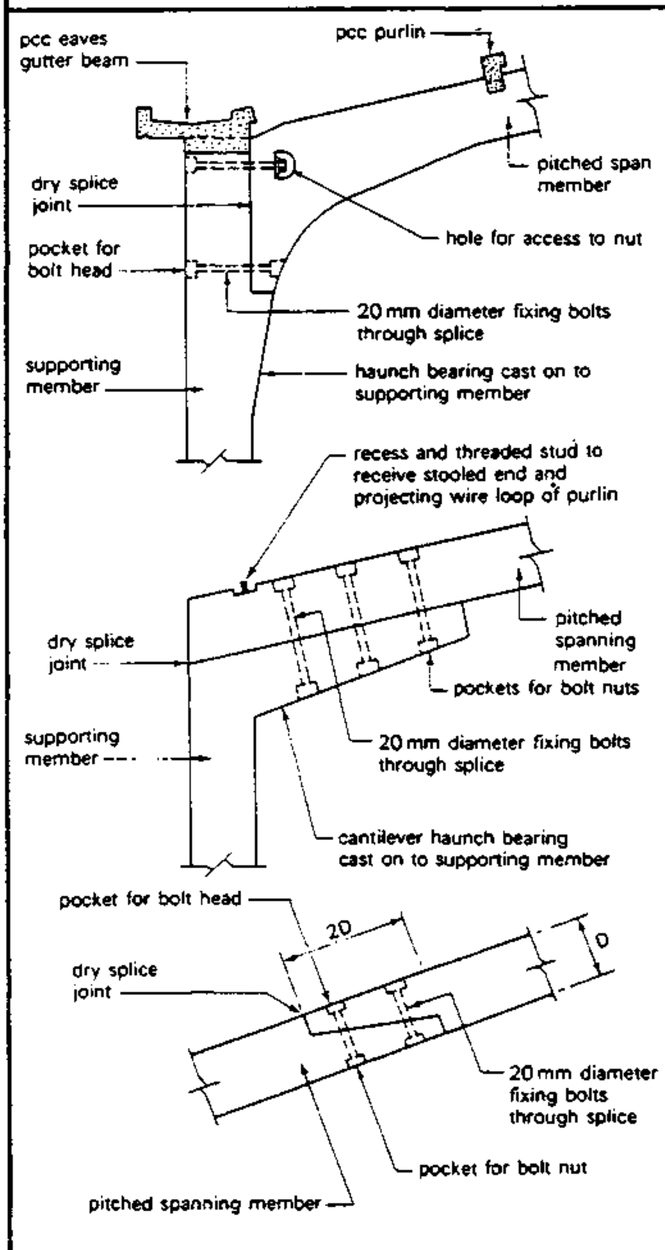

Typical splice details for pcc portal frames

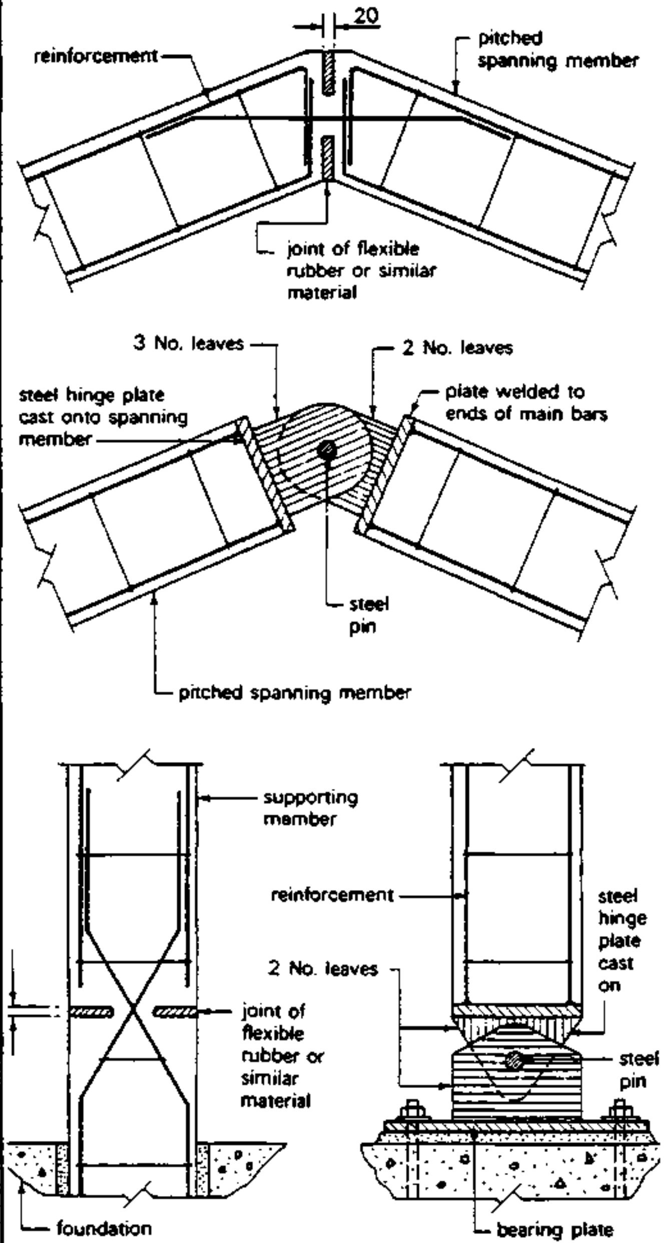

Typical hinge details for pcc portal frames

6. Where members of the frame are joined or spliced together the connections are generally mechanical (nut and bolt) and therefore the erection and jointing can be carried out by quickly trained semi-skilled labour.
7. The clean lines of precast concrete portal frames are considered to be aesthetically pleasing.
8. In most cases the foundation design, setting out and construction can be carried out by the portal frame sub-contracting firm.

10.6.3 Steel portal frames

Steel portal frames can be fabricated from standard universal beam, column and box sections. Alternatively a lattice construction of flats, angles or tubulars can be used. Most forms of roof profiles can be designed and constructed giving a competitive range when majority of systems employ welding techniques for the fabrication of alternative system uses special knee joint, apex joint and base joint column sections supplied by the main contractor or by the manufacturer producing the jointing pieces.

The frames are designed to carry lightweight roof coverings of the same loading conditions as those given previously for precast concrete portal frames. Similarly wall claddings can be of the same manner.

Foundations and fixings.

The foundation is usually a reinforced concrete isolated base or pad foundation designed to suit loading and ground bearing conditions. The connection of the frame to the foundation can be by one of three basic methods:

1. Pocket connection - The foot of the supporting member is inserted and grouted into a pocket formed in the concrete foundation as described for precast concrete portal frames. To facilitate levelling some designs have gussets welded to the flanges of the columns.
2. Base plate connection - traditional structural steelwork column to foundation connection using a slab or a gusset base fixed to a reinforced concrete foundation with cast in holding down bolts.
3. Pin or hinge connection - special bearing plates designed to accomodate true pin or rocker devices are fixed by holding down bolts to the concrete foundation to give the required low degree of rigidity at the connection.

STEEL PORTAL FRAMES

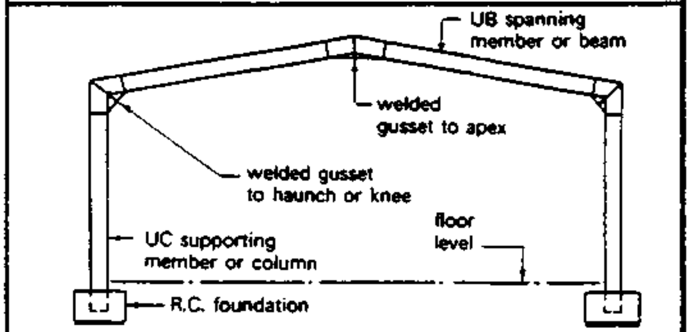

Typical steel portal frame profile

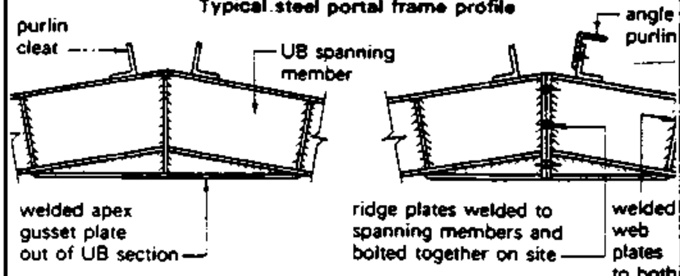

Alternative apex details

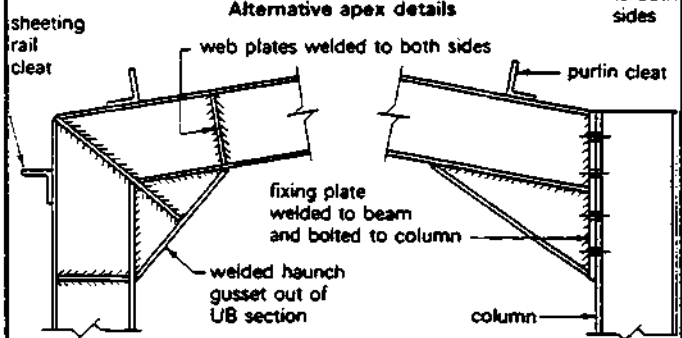

Alternative knee joint details

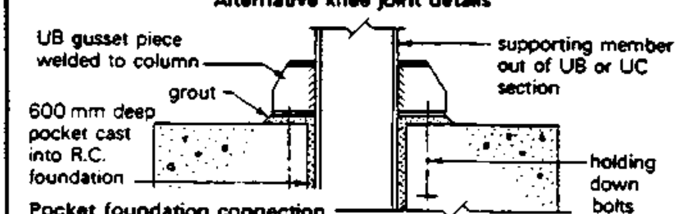

Pocket foundation connection

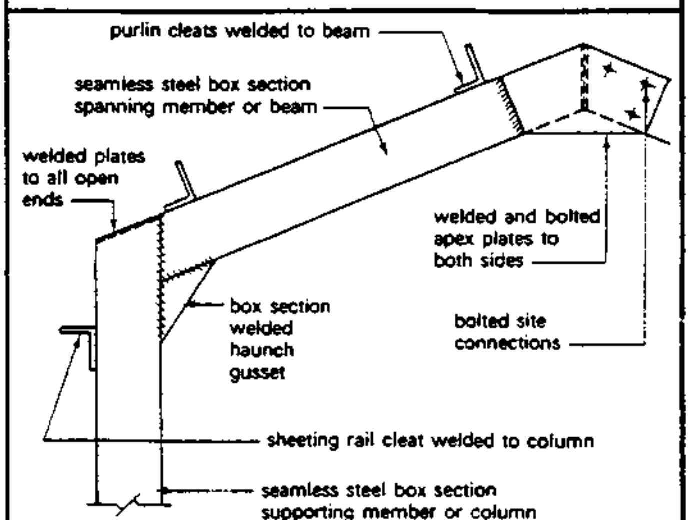

STEEL PORTAL FRAMES

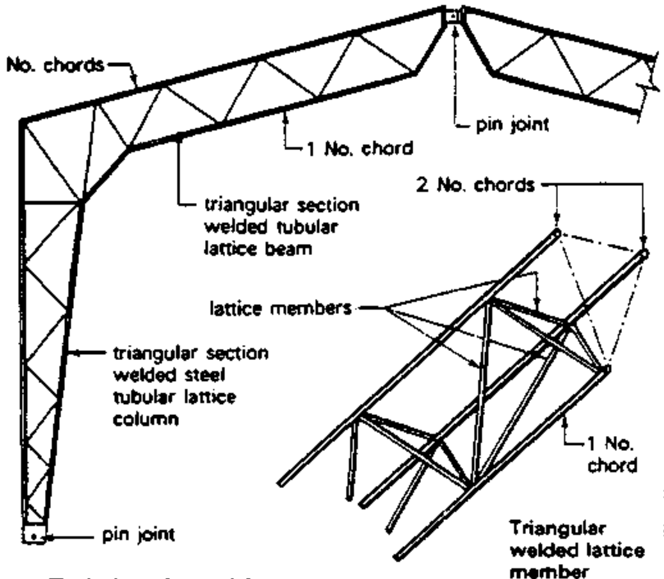

Typical steel portal frames

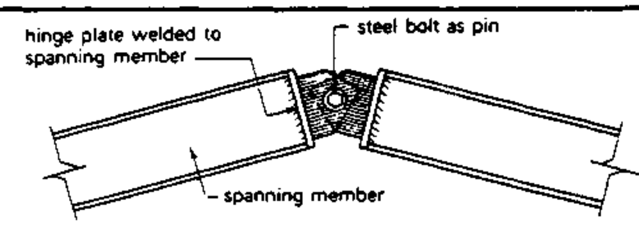

Typical apex hinge joint

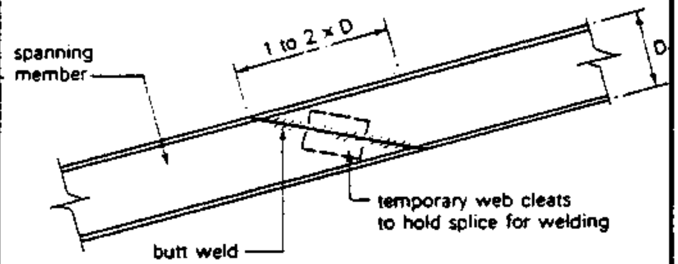

Welded splice joint

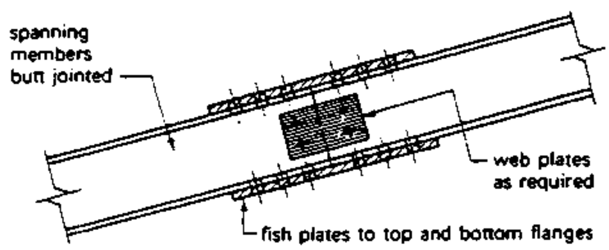

Bolted splice joint

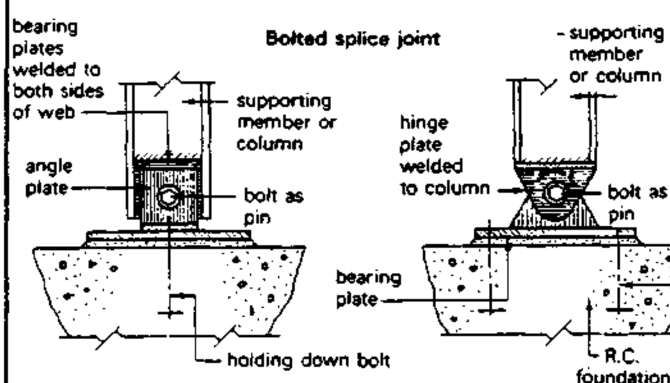

Typical base hinges

Steel portal frames - splices and hinges

ADVANTAGES

Advantages

The main advantages of factory controlled production are: a standard range of manufacturer's systems, a frame of good wind resistance and the ease of site assembly using quickly trained semi-skilled labour attributed to precast concrete portal frames can be equally applied to steel portal frames. A further advantage of steel is that generally the overall dead load of a steel portal frame is less than a comparable precast concrete portal frame. However, steel has the disadvantage of being a corrosive material which will require a long life protection of a patent coating or regular protective maintenance generally by the application of coats of paint. Steel has a lower fire resistance than precast concrete but if the frame is for a single storey building structural fire protection may not be required under the Building Regulations (see Building Regulation E5(4)).

10.6.4 Timber portal frames

Timber portal frames can be manufactured by several methods which produce a light, strong frame of pleasing appearance which renders them suitable for buildings such as churches, halls and gymnasiums where clear space and appearance are important.
The common methods used are glued laminated portal frames, plywood faced portal frames and timber portal frames using solid members connected together with plywood gussets.

Glued laminated portal frames.

The main objective of forming a laminated member consisting of glued layers of thin section timber members is to obtain an overall increase in strength of the complrete component over that which could be expected from a similar sized solid section of a particular species of timber. This type of portal frame is usually manufactured by a specialist firm since the jigs required would be too costly for small outputs.
The selection of suitable quality softwoods of the right moisture content is also important for a succesful design. In common with other timber portal frames, these can be fully rigid, 2pin or 3 pin structures.
Site work is simple, consisting of connecting the foot of the supporting member to the metal shoe fixing or to a pivot housing bolted to the concrete foundation and connecting the joint at the apex or crown with a bolt fixing or a hinge device. Most glued laminated timber portal frames are fabricated in two halves which eases transportation problems and gives maximum usage of the assembly jigs. The frames can be linked together at roof level with timber purlins and clad with a light-weight sheeting or decking; alternatively, they may be finished with traditional roof coverings.
Any form of walling can be used in conjunction with these frames provided such walling forms comply with any of the applicable Building Regulations.

TIMBER PORTAL FRAMES

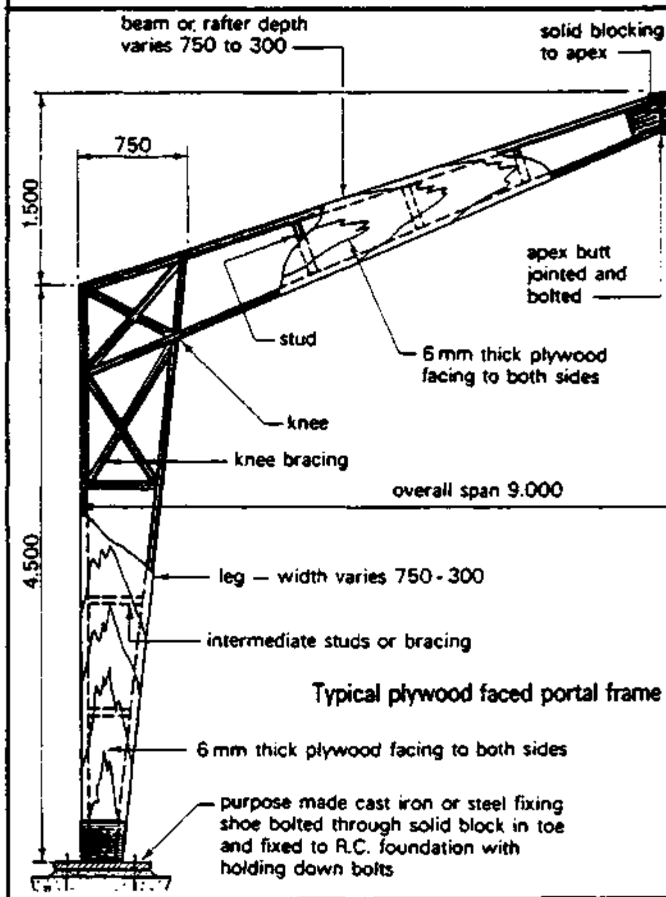

Typical plywood faced portal frame

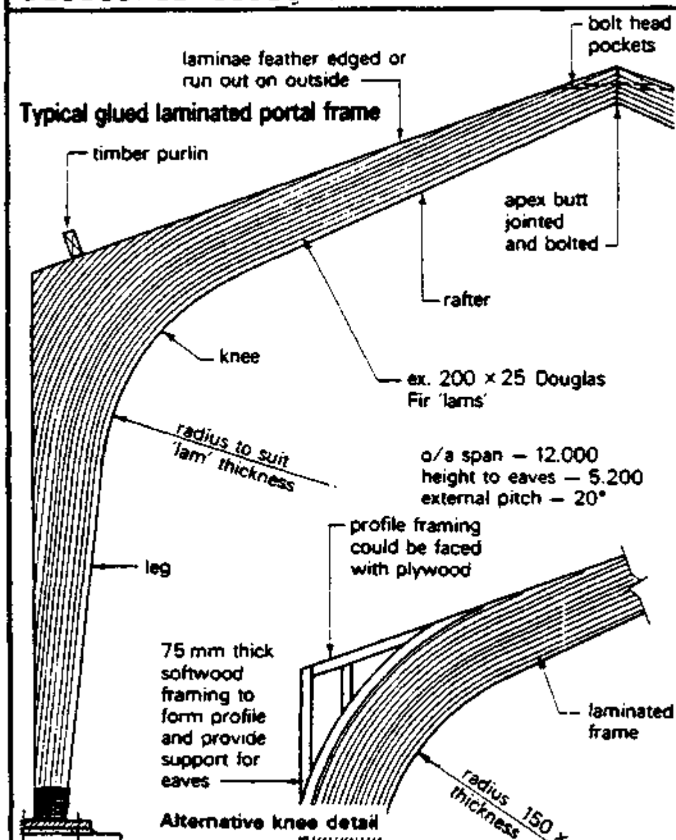

Typical glued laminated portal frame

Plywood faced portal frames.

These frames are suitable for small halls, churches and schools with spans in the region of 9.000 m. The portal frames are in essence boxed beams consisting of a skeleton core of softwood members faced on both sides with plywood which takes the bending stresses. The hollow form of the construction enables electrical and other small services to be accommodated within the frame members. Design concepts, fixing and finishes are as given above for glued laminated portal frames.

Solid timber and plywood gussets.

These frames were developed to provide a simple and economic timber portal frame for clear span buildings using ordinary tools and basic skills. The general concept of this form of frame veries from the two types of timber portal frames previously described in that no glueing is used, the frames are spaced close together (600, 900 and 1200 mm centres) and are clad with a plywood sheath so that the finished structure acts as a shell giving a lightweight building which is very rigid and strong. The frames can be supplied in two halves and assembled by fixing the plywood apex gussets on site before erection or alternatively they can be supplied as a complete frame ready for site erection.
The foundations for this form of timber portal frame consists of a ground beam or alternatively the frames can be fixed to the edge of a raft slab. A timber speader or sole plate is used along the entire length of the building to receive and distribute the thrust loads of the frames.

Connection to this spreader plate is made by using standard galvanised steel joists hangers or by using galvanised steel angle cleats. Standard timber windows and doors can be inserted into the side walls by trimming in the conventional way and infilling where necessary with studs, noggins and rafters.
The advantages of all timber portal frame types can be enumerated as follows:

1. Constructed from readily available materials at an economic cost.
2. Light in weight.
3. Easy to transport and erect.
4. Can be trimmed and easily adjusted on site.
5. Protection against fungi and/ or insect attack can be by impregnation, or surface application.
6. Pleasing appearance either as a natural timber finish or painted.

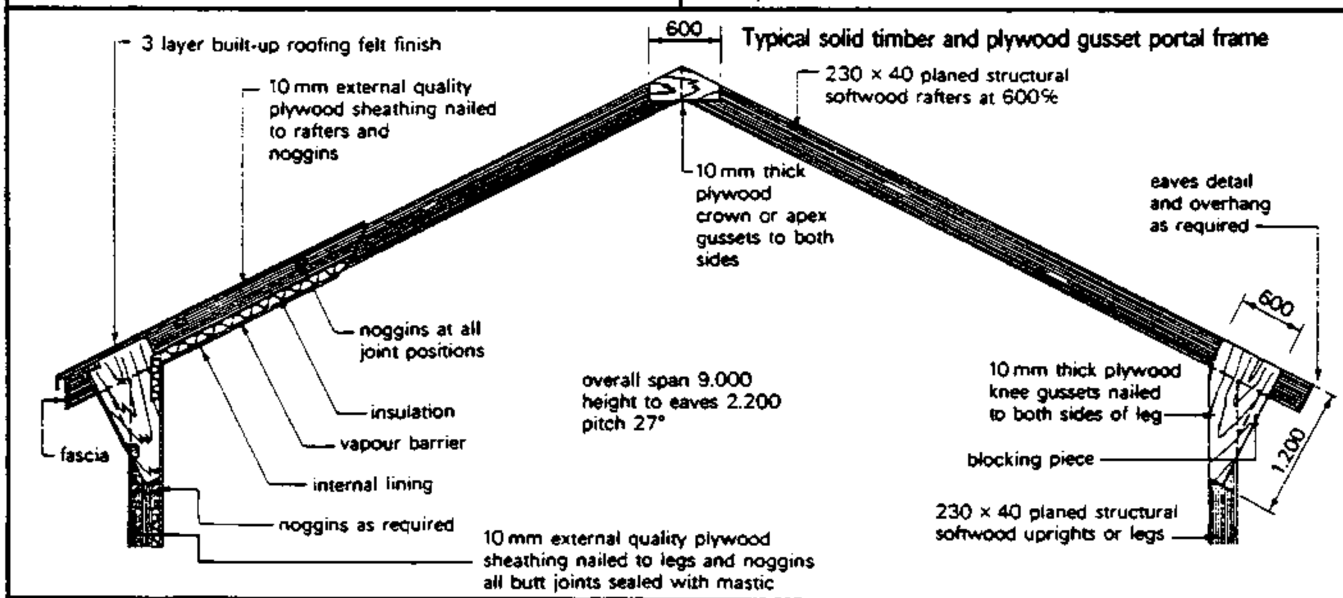

Try to answer the following questions and practice sketching whereever necessary and possible

1) Structural Concept

a) Explain the term FRAMED STRUCTURE, and name the elements of a frame work!

b) Classify different types of FRAMED STRUCTURES! (use sketches for illustration!)

c) When is it logical and economical to use FRAMED STRUCTURES?

2) Functional Requirements

a) Explain the difference between

- Non-rigid frames
- Semi-rigid frames and
- Fully-rigid frames

3) Structural Materials

a) List materials which are commonly used for framed structures!

b) Explain the following terms:

- Depth/span ratio
- Dead/live load ratio
- Strength/weight ratio

4) Layout of frames

a) Write notes on SPACING of frames!

b) Why should the layout of a SKELETON STRUCTURE be based on a regular STRUCTURAL GRID?

5) Building Frames

a) What are BUILDING FRAMES?

b) List different frame members and give brief explainations on each!

c) Write notes on reinforced concrete frames and explain their members:

- reinforced concrete beams
- reinforced concrete columns
- reinforced concrete slabs

(use sketches for illustration!)

d) Write notes on PRECAST CONCRETE FRAMES and their methods of connections! (use sketches for illustration!)

e) Compare structural steel, reinforced 'in situ' and precast concrete as a material in frame construction!

f) Write notes on STRUCTURAL STEEL FRAMES! (use sketches for illustration!)

g) What are CASTELLATED UNIVERSAL SECTIONs and why are they used?

h) Explain the terms SHOP CONNECTIONS and SITE CONNECTIONS and how they can be made by using bolts, rivets or by welding!

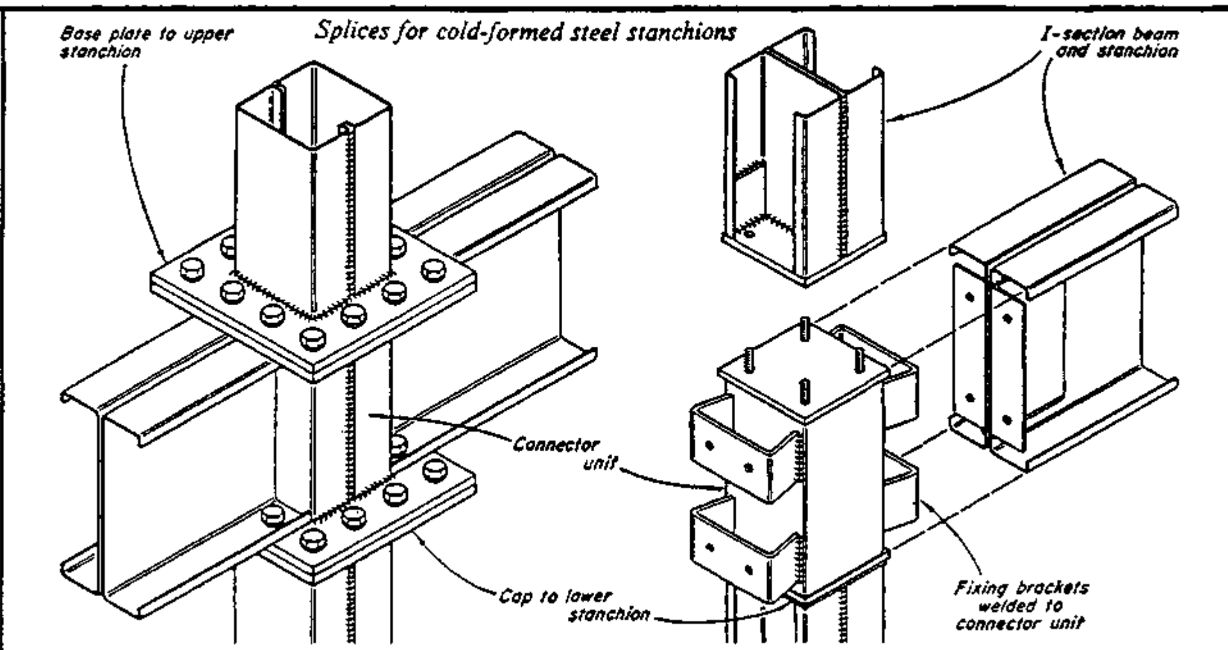

i) Write notes on structural steel connections!

k) Describe the erection of structural steel frames!

l) What do you know about FIRE PROTECTION of STEELWORK?

m) Write notes on TIMBER FRAMES, explaining their members COLUMNS and BEAMS, and their method of CONNECTIONS! (use sketches for illustration!)

n) Explain, by using sketches, the ways of construction of BUILDING FRAMES in TIMBER.

o) What do you know about the PREFABRICATION of timber frames?

6) Portal frames

a) Characterize PORTAL FRAMES

b) What are the methods to overcome excessive forces at the foundation?

c) What are HINGES?

d) Explain the three basic forms of portal frames and show - by using sketches - the position of their hinges.

e) Write notes on CONCRETE PORTAL FRAMES, and their FOUNDATION and FIXINGS! (use sketches for illustration!)

f) What are the ADVANTAGES of concrete portal frames?

g) Write notes on STEEL PORTAL FRAMES, and their FOUNDATIONS and FIXINGS! (use sketches for illustration!)

h) What are the ADVANTAGES of steel portal frames?

i) Write notes on TIMBER PORTAL FRAMES and explain the differences between:

. GLUED LAMINATED PORTAL FRAMES

. PLYWOOD FACED PORTAL FRAMES and

. SOLID TIMBER and PLYWOOD GUSSETS.

(use sketches for illustration!)

k) What are the ADVANTAGES of all timber portal frame types?

11. PROTECTION of BUILDINGS

CONTENTS:

PENETRATION OF WATER

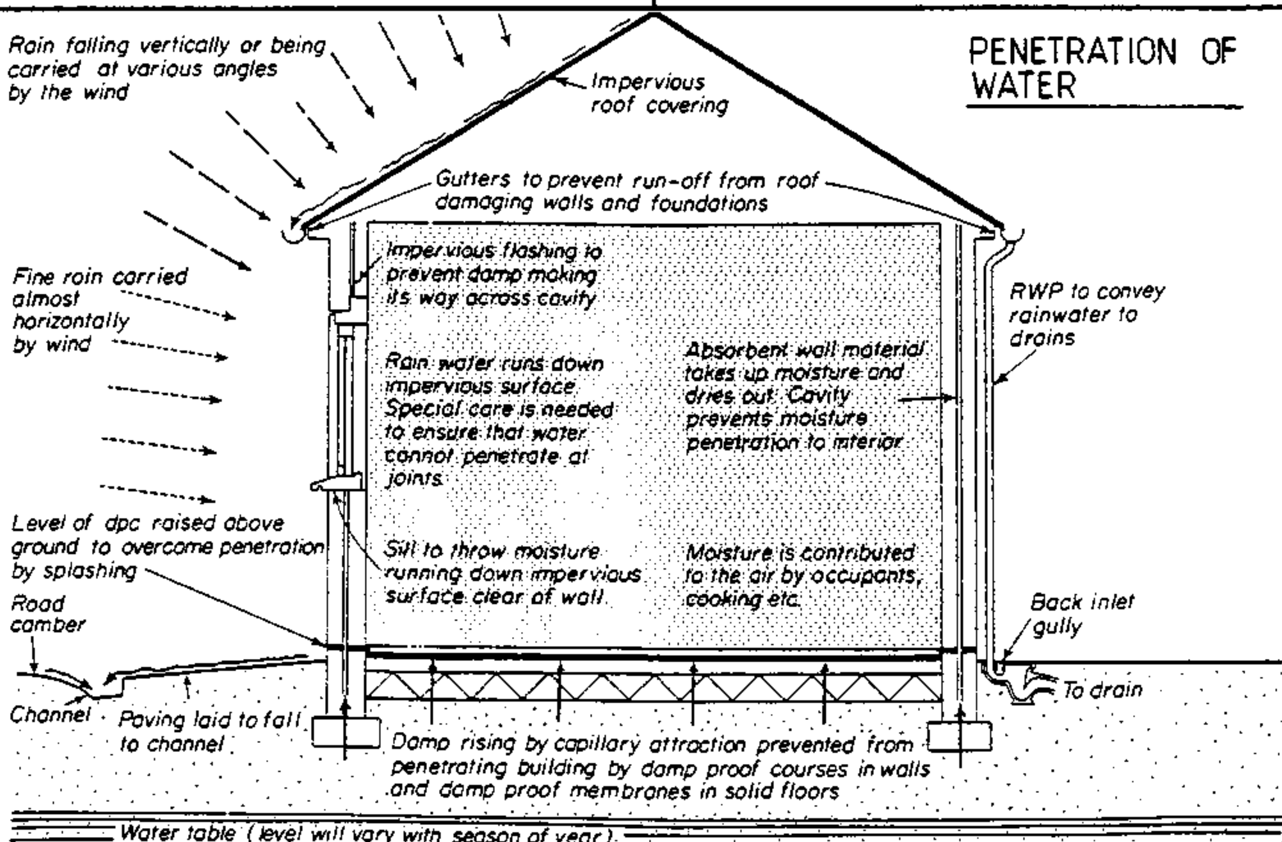

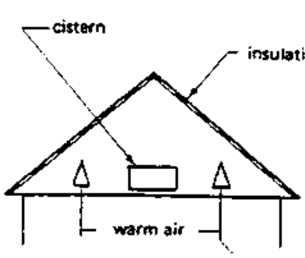

Insulation at rafter level

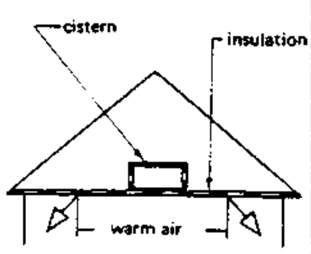

Insulation at ceiling level

REFERENCES:

1. R. L. Fullerton
" Building Construction in Warm Climates"
Vo. 2,3

2. Peter Burberry
MITCHELL,S BUILDING SERIES
"Enviroment and Services"

3. R. Chudley
"Construction Technology"
Vol. 2,3

TCA TECHNICAL COLLEGE ARUSHA
CHUO CHA UFUNDI ARUSHA
CIVIL ENGINEER
DEPARTMENT

11. PROTECTION of BUILDINGS

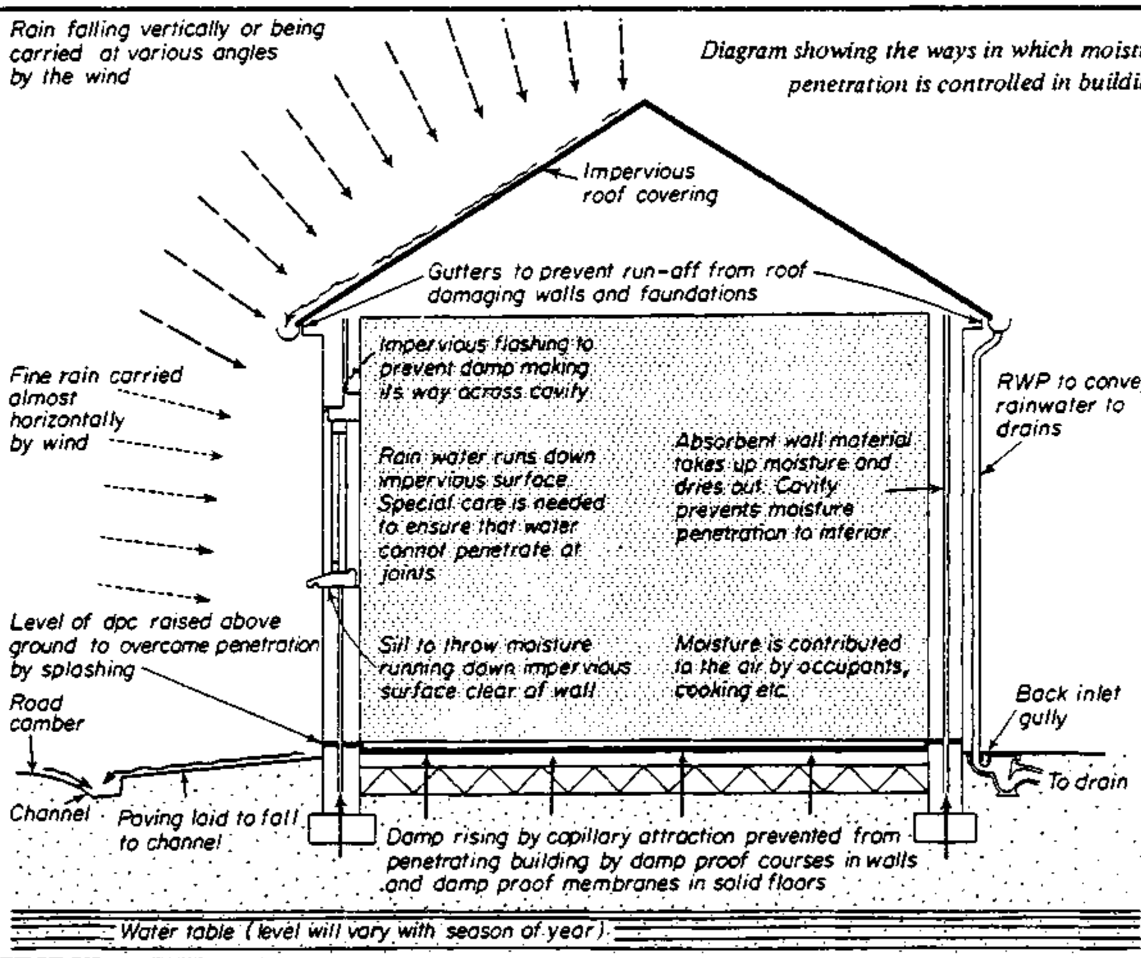

11. <u>Protection of Buildings</u>

11.1 Exclusion of Water

WATER in its free liquid form must be totally excluded from the interiors of buildings and its presence as VAPOUR in the air or as MOISTURE content of building materials must be controlled to within acceptable limits.

The shrinkage and swelling of soil, the effect of moisture on vegetation, and the water-retaining properties of soils all affect foundation design.

Combinations of soils and water are responsible for the settlement of buildings, cracking, shrinkage, decay, damp disease, chemical attack, subsidence, and landslips.

Moisture in buildings comes from three main sources:

I Precipitation as rain
II Damp rising from the ground through building materials by capillary attraction or as vapour.
III Condensation upon cold surfaces of humidity from the air.

In addition condensed droplets in the air (fog) can be carried by wind to wet the surfaces of the building and to penetrate joints and materials.

The relative humidity of air in buildings can be a critical factor in goverming thermal comfort since it influences the ability of the body to lose heat.

PRECIPITATION

11.1.1 Precipitation.

The frequency of rainfall is well recorded by weather stations every where, and, despite local variations, the designer usually knows what to allow for. In determining open channel and gutter sizes the annual rainfall is not so important as the actual period of the storm and its intensity.

Run-offs can also be hampered by insufficient fall, blockage, damage through traffic, or a sewage system which is simply too small. Soakaways should be large enough to accomodate sudden storms and should also have a seperate drainage system.
The construction of soakaways may be governed by local authorities, who sometimes have a standard layout.
Rainfall statistics in the tropics rarely give an adequate picture of the combined effects of rain, wind, and freak storms. Achieving a perfect match of weather and buildings is not often possible, owing to variations both in exposure and in the performance of the structure itself. These latter may be due to detailing, materials, the size of components, workmanship, and other such factors. And again, rain does not wet walls in the absence of wind. Storms, however, frequently drive rain horizontally and even upwards under balconies and ventilators.

ROOF DRAINAGE

11.1.1.1 Roof Drainage
The most likely source of trouble from water is the roof. Built-up felts, flat roof overflow, rainwater wall streaking, expansion, imperfect flashing, felt blistering inaccurate flow-load calculations incorrect size of large valley gutters, outlets, and r.w.p.s. are common causes of failure. Plastic pipes and gutters also need flexible joints to accomodate thermal movement. Areas subject to sudden storms should have adequate disposal capacity. Ground aprons which take roof discharge direct should have suitable collection channels with sufficient fall, and should be free of blockage and provide easy access to soakaways and drains.

FLOODING

11.1.1.2 Flooding

In coastal areas especially flooding is a common occurence. The extent of damage will depend on the nature of the foundations, the degree of buffeting by the elements, the degree of expansion of soils, erosion, settlement, and crakking. Services, including electricity, may be impaired, plasterboard ruined, timber and plywood split and warped.
After draining or pumping, it may be necessary to punch holes in the lowest areas and remove water trapped in underfloor ducts, pits or cavities. Ventilators and similar openings may have to be cleared of mud. Sea-water flooding can cause erosion of metals, concrete, and lime. Drains should be inspected before use; and one unpleasant effect could be due to backwash, particularly where cesspits and septic tanks are in use. Having cleaned up as well as possible, doors, windows, and vents should be opened and everythin should be done to create maximum air flow through the building.

DROUGHT

11.1.1.3 Drought

In hot dry climates where living conditions have been adapted to the environment low annual rainfall is not considered as drought. In such circumstances a building is made to combat excessive sunshine, heat, wind, and dust storms. Sanitary services are either designed to be able to cope using the water-supply available, or other means of disposal are used.

Drought in areas of reasonable rainfall and humidity can have serious effects. Shrinkage and settlement, with resulting crakking and bleaching of exposed finishes can occur. The building and its environment will deteriorate where maintanance depends on a supply of water, not to mention the unpleasantness and distress caused by the depletion of the supply. What is sometimes described as a drought is often a decrease in supply resulting from increased demand, particularly in growing towns.

DAMP RISING & . MOIST. MIGRATION

11.1.2 Damp Rising and Moisture Migration.

Movement of moisture through the materials of which the building is constructed can occur through capillary attraction or by diffusion of vapour through the pores of the material. The sources of moisture which must be considered in this context include not only precipitation on external surfaces but also damp from the ground floors are not often made in this way. Since, in the case of walls, the exposure to moisture is intermittent it is possible to use thick solid walls of porous materials which absorb moisture into their external faces and then allow it to evaporate without giving rise to serious internal penetration. This type of wall generally has to be very much thicker than is required for structural needs and in modern buildings, means other than thickness have to be used to limit moisture penetration.
Two methods of control are normally employed. Either a barrier of impervious material or an air gap is placed to intercept the movement. Flashings (capillary movement only), damp proof courses, damp proof membranes (capillary vapour diffusion) and vapour barriers (vapour only) are examples of impervious materials bein used as barriers. Cavities, provided that they are not bridged by moisture transmitting features, are a very effective means of arresting capillary movement. They are not necessarily effective against vapour diffusion since unless well ventilated it will be possible for the vapour to pass across. Suspended ground floors formed a good example of a cavity formed to prevent capillary and vapour movement which to be effective in preventing vapour reaching the other side had to be adequately ventilated. This type of construction has now largely gone out of use because of the high heat losses which resulted from the ventilation.
A floor resting solidly on the ground and having a continuous damp proof membrane gives a more satisfactory overall result.

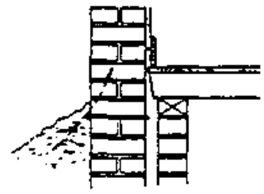

(a) Bridging by earth.

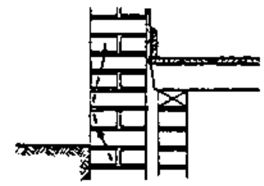

(b) Bridging by mortar pointing.

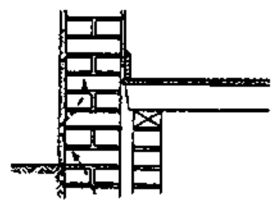

(c) Bridging by rendering.

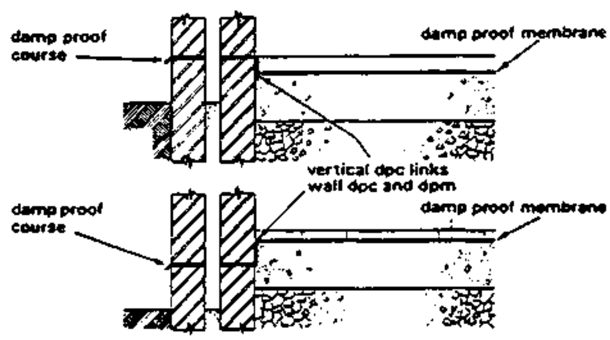

11.1.3 Condensation. Condensation arises from the variation with temperature of the capacity of air to hold moisture in the form of water vapour. As temperatures increase the capacity increases. For each temperature, however, there is a saturation level of moisture. When air which has absorbed moisture is cooled to such a temperature that the moisture content exceeds the saturation point, the excess moisture will be deposited as water.

In buildings, the air from outside is taken in and warmed and moisture is addded from occupants and processes. If cold surfaces such as windows, badly insulated walls, or cold metal service pipes exist, they can cool the air immediately adjacent to them so that moisture is deposited on the surface in the form of CONDENSATION: This is both unsightly and likely to cause damage to the contents and finishes of rooms and also to the wall, ceiling and floor materials.

In equatorial coastal climates with little seasonal or diurnal variation in temperature there is not a great deal of heavy condensation. though humidity can be high. Hotels and public buildings are often equipped with air conditioning; if left on for long periods it reverses the process normal to temperate zones, causing heavy condensation to form on the outside of windows and thus spoiling visibility and speeding deterioration of the frames.

Table: Sources and approximate quantities of vapour input to buildings.

Source	Approximate quantity
People: Sedentary Active	0.05kg per person/ 0.2 kg per person/ / per hour
GAS: Cooking or any flueless heaters or appliances	0.81 per m3 of town gas
Paraffin: Flueless heaters	1 kg per litre appr. (1 litre represents approx.4MJ heat output)
Cooking, bathing and showers	0.03to0.06 kg per hour
Clothes washing and drying	Too variable for figure to be given but very substantial quantities of water can be put into the atmosphere and special precautions against general penetration of this moisture into buildings are required.

CONDENSATION

Drying out is mainly a matter of the time taken for water vapour from cellular pores to reach the surface of the material: the rate of evaporation reduces as the temperature falls. Buildings when drying out are thus cooler than the ambient air, and this isthe principle on which the traditional earthenware water cooler works. No rule of thumb on drying out is possible; but premature decoration can be disastrous, especially in damp regions. Dehumididfiers are sometimes used for thies purpose if circumstances warrant it.
The consequences of condensation are, in many modern constructions, more acute than was the case in the past. In masonry and brick constructions significant quantities of water can condense and subsequently evaporate without being apparent or causing serious deterioration.
Risk of condensation can be minimised by increased ventilation. The most effective method, however, is to keep the surface temperature of i.e. walls, windows, cold metal pipes etc. above dewpoint.

Table:
Excess moisture content of air (over outdoor content) for various building types

Building type	Excess content g moisture per kg of dry air
Shops, offices, classrooms, public buildings, dry industrial processes	1,7
Dwellings	3,4
Catering establishments or wet industrial processes	6,8

11.2 THERMAL INSULATION

11.2 Thermal Insulation

11.2.1 Definition

Thermal insulation may be defined as a barrier to the natural flow of heat from an area of high temperature to an area of low temperature. In buildings this flow is generally from the interior to the exterior. During hot seasons however the flow may occur from the exterior to the interior.
Heat is a from of energy consisting of the ceaseless movement of tiny particles of matter called molecules; if these particles are moving fast they collide frequently with one another and the substance becomes hot. Temperature is the measure of hotness and should not be confused with heat.
The transfer of heat can occur in three ways.

Conduction:
Vibrating molecules come into contact with adjoining molecules and set them vibrating faster and hence they become hotter; this process is carried on throughout the substance without appreciable displacement of the particles.

Convection:
Transmission of heat within a gas or fluid caused by the movement of particles which become less dense when heated and rise thus setting up a current or circulation.

Radiation:
Heat is considered to be transmitted by radiation when it passes from one point to another without raising the temperature of the medium through which it travels.

In a building all three methods of heat transfer can take place since the heat will be conducted through the fabric of the building and dissipated on the external surface by convection and/or radiation.
The traditional thick and solid building materials used in the past had a natural resistance to the passage of heat in large quantities, whereas the lighter and thinner materials used today generally have a low resistance to the transfer of heat. Therefore to maintain a comfortable and healthy internal temperature the external fabric of a building must be constructed of a combination of materials which will provide an adequate barrier to the transfer of heat.
Thermal insulation of buildings will give the following advantages:

1. Reduction in the rate of heat loss
2. Lower fuel costs
3. Reduction in the risk of pattern staining.
4. Reduction of condensation and draughts thus improving the comfort of the occupants.

INSULATING MATERIALS

11.2.2 Insulating Materials

When selecting or specifying thermal insulation materials the following must be taken into consideration:

1. Resistance value of the materials.
2. Need for a vapour barrier since insulating materials which become damp or wet, generally due to condensation, rapidly loose their insulation properties; therefore if condensation is likely to occur a suitable vapour barrier should be included in the detail. Vapour barriers should always be located on the warm side of the construction.
3. Availability of material chosen.
4. Ease of fixing or including the material in the general construction
5. Appearance if visible.
6. Cost in relation to the end result and ultimate savings on fuel and/or heating installation.
7. Fire risk - all wall and ceiling surfaces must comply with the requirements of Building Regulation E 15 - restriction of spread of flame over surfaces of walls and ceilings.

Insulating materials are made from a wide variety of materials and are available in a number of forms.

INSULATING CONCRETE

Insulating concrete:
Basically a concrete of low density containing a large number of voids. This can be achieved by using lightweight aggregates such as clinker, foamed slag, expanded clay, sintered pulverised fuel ash, exfoliated vermiculite and expanded perlite, or alternatively an aerated concrete made by the introduction of air or gas into the mix. No fines concrete made by using lightweight or gravel aggregates between 20 and 10 mm size and omitting the fine aggregate is suitable for load bearing walls. Generally light - weight insulating concrete is used in the form of an in situ screed to a structural roof or as lightweight concrete blocks for walls.

LOOSE FILLS

Loose fills:
Materials which can be easily poured from a bag and levelled off between the joists with a shaped template. Materials include exfoliated vermiculite, fine glass fibrewool, mineral wool and cork granules. The depth required to give reasonable results is 25 - 35 mm; care should be taken to indicate, by paint or chalk marks on the sides of the joists, any electrical connections or junctions which have been covered over. Most loose fills are rot and vermin proof as well as being classed as noncombustible.

BOARDS

Boards;
Used mainly as dry linings to walls and ceilings either for self finish or direct decoration. Types include aluminium foil-backed plaster board, woodwool slabs, expanded polystyrene boards, asbestos insulating board and fibreboards. Insulating fibreboards should be conditioned on site before fixing to prevent buckling and distortion after fixing. A suitable method is to expose the boards on all sides so that the air has a free passage around the sheets for at least 24 hours before fixing. During this conditioning period the boards must not be allowed to become wet or damp.

QUILTS

Quilts:
Made from glass fibre or mineral wool bonded or stitched between outer paper coverings for easy handling. The quilts are supplied in rolls from 6.000-13.000 m long and cut to suit standard joist spacings. The are laid over the ceiling boards and can be obtained in two thicknesses, 25mm thick for general use and 50mm-thick for use where a central heating system is installed

REFLECTIVE INSULATION

Reflective insulation:
Used in both ceiling and wall insulation and consists of reinforced aluminium foil which should be used in conjunction with an unventilated cavity of at least 25 mm width.

INSULATING PLASTERS

Insulating plasters:
Factory produced pre-mixed plasters which have lightweight perlite and vermiculite expanded minerals as aggregat4e, and require only the addition of clean water before application. They are only onethird the weight of sanded plasters, have three times the thermal insulation value and are highly resistant to fire.

FOAMED CAVITY FILL

Foamed cavity fill:
A method of improving the thermal insulation properties of an external cavity wall by filling the cavity wall with urea-formaldehyde resin foamed on site. The foam is formed using special apparatus by combining urea-formaldehyde resin, a hardener, a foaming agent and warm water. Careful control with the mixing and application is of paramount importance if a successful result is to be achieved;specialist contractors are normally employed. The foam can be introduced into the cavity by means of 25 mm bore holes spaced 1.000m apart in all directions or by direct introduction into the open end of the cavity. The foam is a white cellular material containing approximately 99% by volume of air with open cells. The foam is considered to be impermeable and therefore unless fissures or cracks have ocurred during the application it will not constitute a bridge of the cavity, in the practical sense, but a relaxation of Building Regulation C9 (2) may be required. In most cases the foam, upon setting, shrinks away from the inner face of the outer leaf enabling any water penetrating the outer leaf to run down the inside face of the external skin.
The most effective method of improving thermal comfort conditions within a building is by fixing insulating materials at the outside position of the surface. Thermal insulation for buildings other than dwellings are covered by separate legislation.

11.3 SOUND INSULATION

11.3. Sound insulation

11.3.1 Definition

Anything that can be heard is a sound, whether it is made by conversation, machinery, or walking on a hard surface. All sounds are produced by a vibrating object which moves rapidly to and fro causing movement of the tiny particles of air surrounding the vibrating source. the displaced air particles collide with adjacent particles setting them in motion and in unison with the vibrating object. Air particles move only to and fro but the sound wave produced travels through the air until at some distance from the source the movement of the particles is so slight that the sound produced is inaudible.
For a sound to be transmitted over a distance a substance, called the sound medium, is required. It can be shown by experiments that sound cannot travel through a vacuum but it can be transmitted through solids and liquids.
Sounds can differ in two important ways, by loudness and by pitch. The loudness of a s ound depends on the distance through which the vibrating object moves to and fro as it vibrates; the greater the movement the louder the sound. The loudness with which a sound is heard depends upon how far away from the source the receiver or ear is. The unit of subjective loudness is a phon whilst the objective unit is called a decibel.

Although the loudness of a sound will vary with the frequency of the note for practical building purposes, the phon and the decibel are considered to be equal over the range of 0 phons, the threshold of hearing, to 130 phons the threshold of painful hearing.
The pitch of a sound depends on the rate at which the vibrating object oscillates. The number of vibrations in a second is called the frequency and the higher the frequency the higher the pitch. The lowest pitched note that the human ear can hear has a frequency of approximately 16 hertz whereas the heighest pitched note which can be heard by the human ear has a frequency of approximately 20.000 hertz or cycles per second.
When a sound is produced within a building three reactions can occur:
1. The pressure or sound waves can come into contact with the walls, floor and cailing and be reflected back into the building.
2. Some of the sound can be absorbed by these surfaces and/or the furnishes. It mustbe noted that sound absorption normally only benefits the occupants of the room in which the sound is generated since its function is to reduce the amount of reflected sound.
3. The sound waves upon reaching the walls, floor and ceiling can set these members vibrating in unison and thus transmit the sound to adjacent rooms.
It must also be noted that sounds can enter a building from external sources such as traffic and low flying aircraft (see fig.)

Sounds may be defined as either impact sounds, caused by direct contact with the structure such as footsteps and hammering on walls which will set that part of the structure vibrating, or they can be termed airborne sounds, such as the conversation or radio which sets the structure vibrating only when the sound waves emitted from the source reach the struc-

tural enclosure.
A noise can be defined as any undesired sound and may have any one of the following four effects on man:

1. Annoyance
2. Distrubance of sleep
3. Interfere with the ability to hold a normal conversation.
4. Damage his hearing.

It is difficult to measure annoyance since it is a subjective attitude and will depend upon the mental and physical well being of the listener, together with the experience of being subjected to such types of noise.
Damage to hearing can be caused by a sudden noise such as a loud explosion or by gradual damage resulting from continual noise over a period of years.
The solution to noise or sound problems can only therefore be reasonable to cater for the average person and conditions.
The approach to solving a noise problem can be three-fold:

1. Reduce the noise emitted at the source by such devices as mufflers and mounting machinery on resilient pads.
2. Provide a reasonable degree of sound insulation to reduce the amount of sound transmitted.
3. Isolate the source and the receiver.

11.3.2 Sound Insulation

The most effective barrier to the passage of sound is a material of high mass. With modern materials and methods this form of construction is both impracticable and uneconomic. Unfortunately modern living with its methods of transportation and entertainment generates a considerable volume of noise and therefore some degree of sound insulation in most buildings is desirable.

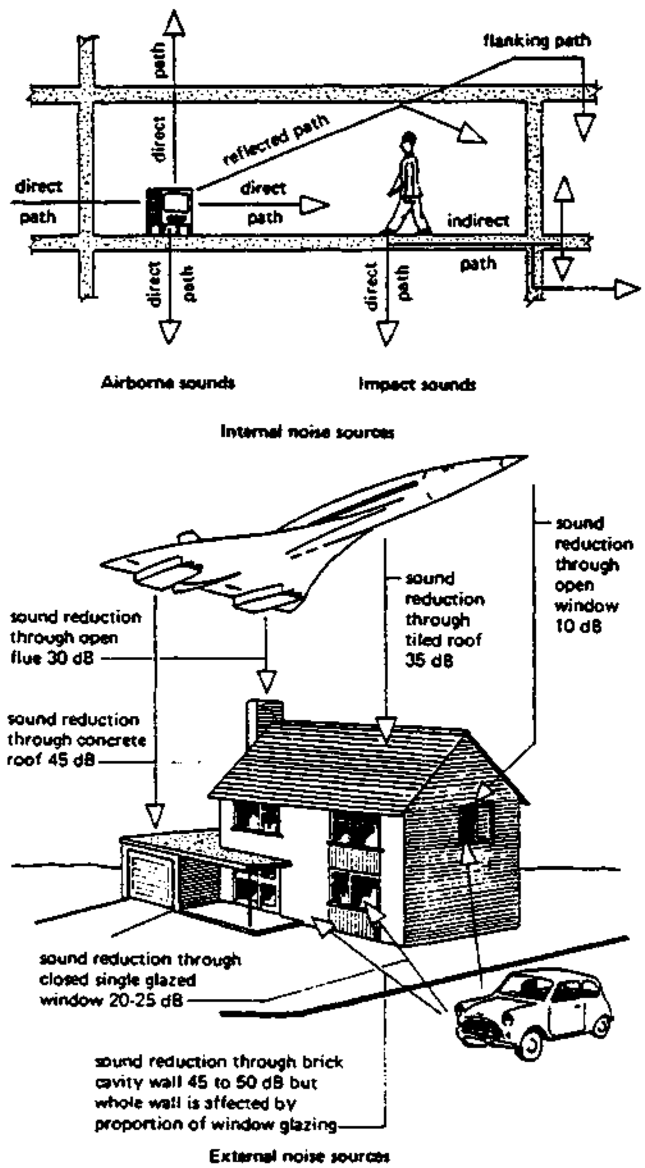

Sources of noise within and around buildings

EXTERNAL NOISE

11.3.3 External noise

Another aspect of sound insulation which, although not covered by Building Regulations, requires consideration is insulation against external noise.

The main barrier to external noise is provided by the shell or envelope of the building, the three main factors being:

1. The mass of the enclosing structure.
2. The continuity of the structure.
3. Isolation by double leaf construction when using lightweight materials.

Generally the main problem for the insulation against external noise is the windows, particularly if these can be opened for ventilation purposes. Windows cannot provide the dual function of insulation against noise and ventilation, since the admission of air will also admit noise. Any type of window when opened will give a sound reduction of about 10 decibels as opposed to the 45 -50 decibel reduction of the traditional cavity wall. A closed window containing single glazing will give a reduction of about 20 decibels or approximately half that of the surrounding wall. It is obvious that the window to wall ratio will affect the overall sound reduction of the enclosing structure.

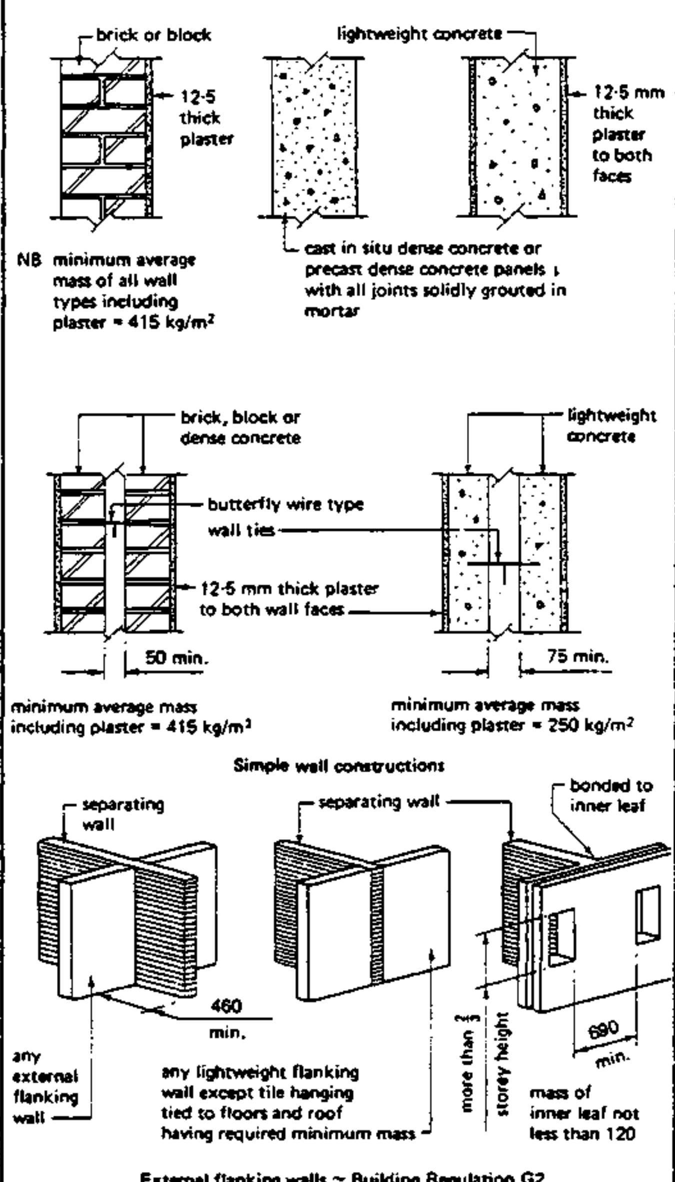

External flanking walls ~ Building Regulation G2

Sound insulation ~ walls

EXTERNAL NOISE

Double glazing can greatly improve the sound insulation properties of windows provided the following points are observed:

1. Sound insulation increases with the distance between the glazed units; for a reduction of 40 decibels the airspace should be 150-200 mm wide.
2. If the double windows are capable of being opened they should be weather-stripped.
3. Sound insulation increases with glass thickness particularly if the windows are fixed; this may mean the use of special ventilators having specific perfomances for ventilation and acoustics.
4. Double glazing designed to improve the thermal properties of a window have no real value for sound insulation.

Roofs of traditional construction and of reinforced concrete generally give an acceptable level of sound insulation, but the inclusion of rooflights can affect the resistance provided by the general roof structure. Lightweight roofing such as corrugated asbestos will provide only a 15-20 decibel reduction but is generally acceptable on industrial buildings where noise is generated internally by the manufacturing processes. The inclusion of rooflights in this type of roof generally has no adverse effects since the sound insulation values of the rooflight materials are similar to those of the coverings.
Modern buildings can be designed to give reasonable sound insulation and consequent comfort to the occupiers but the improvement to existing properties can present problems.

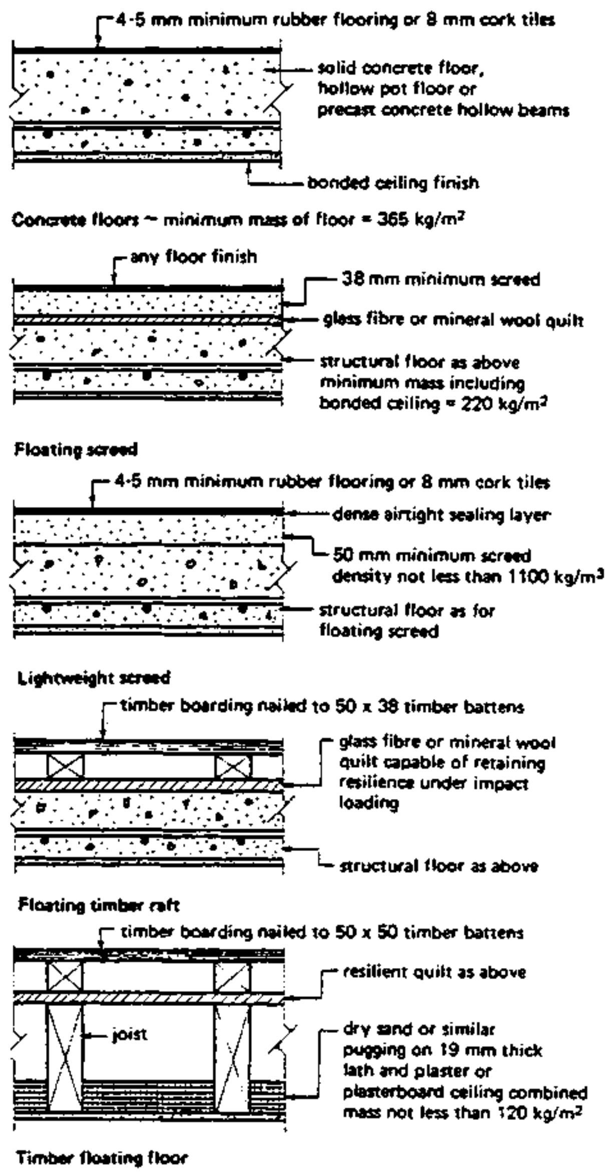

Sound insulation – floors

11.4 FIRE PROTECTION

11.4. Fire Protection

The precautions which can be taken within buildings to prevent a FIRE occuring, or, if it should occur, of containing it within the region of the outbreak, providing a means of escape for people in the immediate vicinity and fighting the fire can be summarized under three headings:

1. Structural fire protection
2. Means of escape in case of fire
3. Fire fighting

FIRE FIGHTING, which is generally integrated with the services of a building, is usually considered in that context and therefore NOT included in this text, as well as MEANS OF ESCAPE IN CASE OF FIRE, which is in the first instance a problem of designing and planning, rather than a problem of building construction.

11.4.1 Structural Fire Protection.

The purpose of structural fire protection is to ensure that during a fire the temperature of structural members or elements does not increase to a figure at which their strength would be adversely affected. It is not practicable or possible to give an element complete protection in terms of time, therefore elements are given a fire resistance for a certain period of time which it is anticipated will give sufficient delay to the spread of fire, ultimate collapse of the structure, time for persons in danger to escape and to enable fire fighting to be commenced.

Before a fire-resistance period can be determined it is necessary to consider certain factors:

1. Fire load of the building.
2. Behaviour of materials under fire conditions.
3. Behaviour of combinations of materials under fire conditions

11.4.1.1 Fire Load

Buildings can be graded as to the amount of overall fire resistance required by taking into account the following.

1. Size of building
2. Use of building
3. Fire load.

The fire load is an assessment of the severity of a fire due to the combustible materials within a building. This load is expressed as the amount of heat which would be generated per unit area by the complete combustion of its contents and combustible members and is given in Joules per square metre. It should be noted that the numerical grade is equivalent to the minimum number of hours fire resistance which should be given to the elements of the structure.

GRADE 1 Low fire load, not more than 1 150 MJ/m2. Typical buildings within this grade are flats, offices, restaurants, hotels hospitals, schools, museums and public libraries.

GRADE 2 Moderate fire load, 1 150to 2 300MJ/m2. Typical examples are retail shops, factories and workshops.

GRADE 4 High fire load, 2 300 to 4 600 MJ/m2. Typical exemples are certain types of workshops and warehouses.

When deciding the grade no account is taken of the effects of any permanent fire protection installations such as sprinkler systems.

11.4.1.2 Fire Resistance of Material

The materials used in buildings can be studied as separate entities as to their behaviour when subjected to the intense heat encountered during a fire and as to their ability to spread fire over their surfaces. Structural steel is not considered to behave well under fire conditions although its ability to spred fire over its surface is negligible. As the fire progresses and the temperature of steel increases there is an actual gain in the ultimate strength of mild steel . This gain in strength decreases back to normal over the temperature range of 250to 400°C. The decrease in strength continues and by the time the steel temperature has reached 550oC it will have lost most of its useful strength. Since the rise in temperature during the initial stages of a fire is rapid this figure of 550oC can be reached very quickly. If the decrease in strength results in the collapse of a member the stresses it was designed to resist will be redistributed; this could cause other members to be overstressed and progressive collapse could occur. Reinforced concrete structural members have good fire resistance properties, and being noncombustible do not contribute to the spread of flame over their surfaces. It is possible however under the intense and prolonged heat of a fire that the bond between the steel reinforcement and the concrete will be broken. This generally results in spalling of the concrete which decreases both the protective cover of the concrete over the steel and the cross sectional area. Like structural steel members, this can result in a redistribution of stresses leading to overloading of certain members, culminating in progressive collapse. Timber, strange as at may seem, behaves very well structurally under the action of fire. This is due to its slow combustion rate, the strength of its core failure remaining fairly constant. The ignition temperature of timber is low (250-300oC) but during combustion the timber chars at an approximate rate of 0.5 mm per minute, the layer charcoal so formed slows down the combustion rate of the core. Although its structural properties during a fire are good, timber being an organic material and therefore combustible, will spread fire over its surface which makes it unsuitable in most structural situations without some form of treatment.

11.4.1.3 Appropriate Types of Construction.

BS 476, Part 8 and Schedule 8 give appropriate types of construction for various notional periods of fire resistance for WALLS, BEAMS, COLUMNS and FLOORS. Schedule 8 of the Building Regulations gives in written and tabulated form various methods of providing the required protection which needs to be translated into working details. The following figures show typical examples taken from this schedules.

WALLS

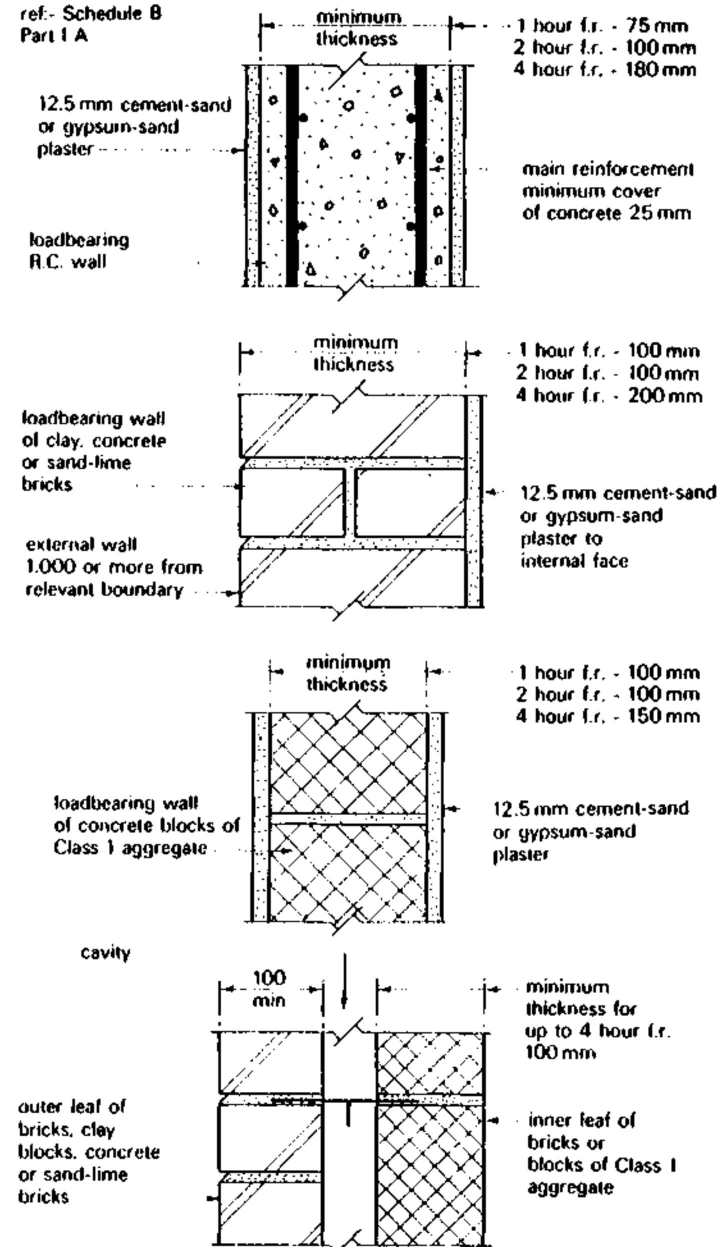

Fire Resistance—walls of masonry construction

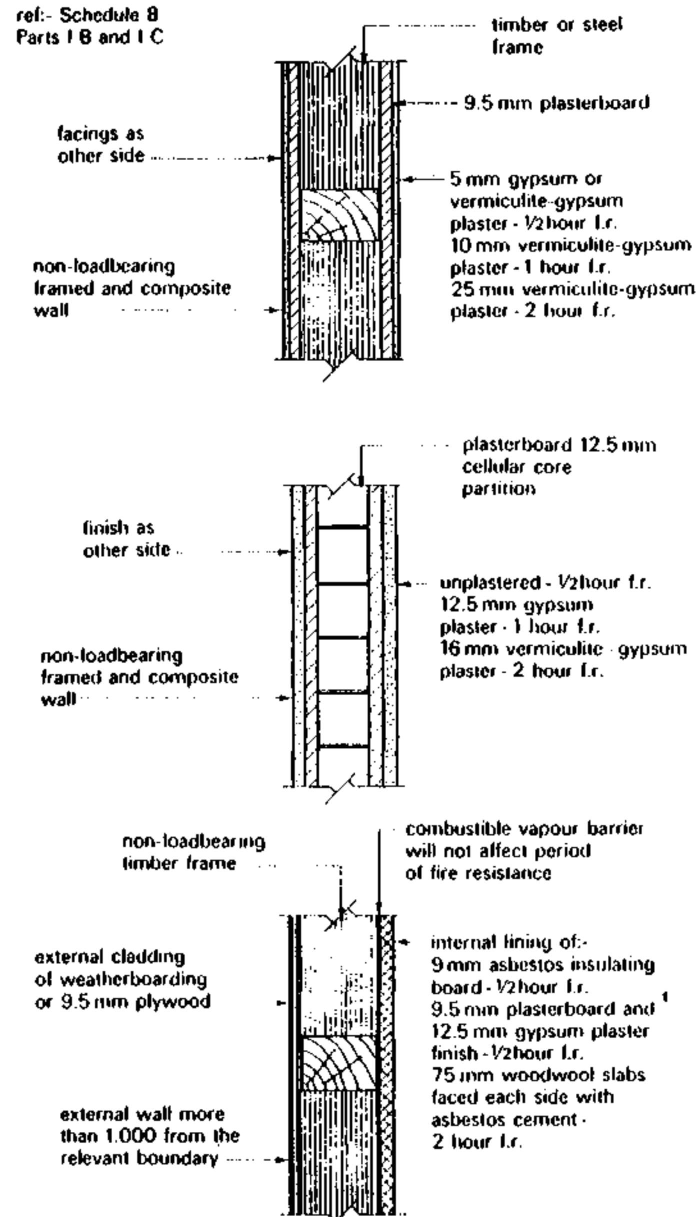

Fire resistance—framed and composite walls

● COLUMNS & BEAMS

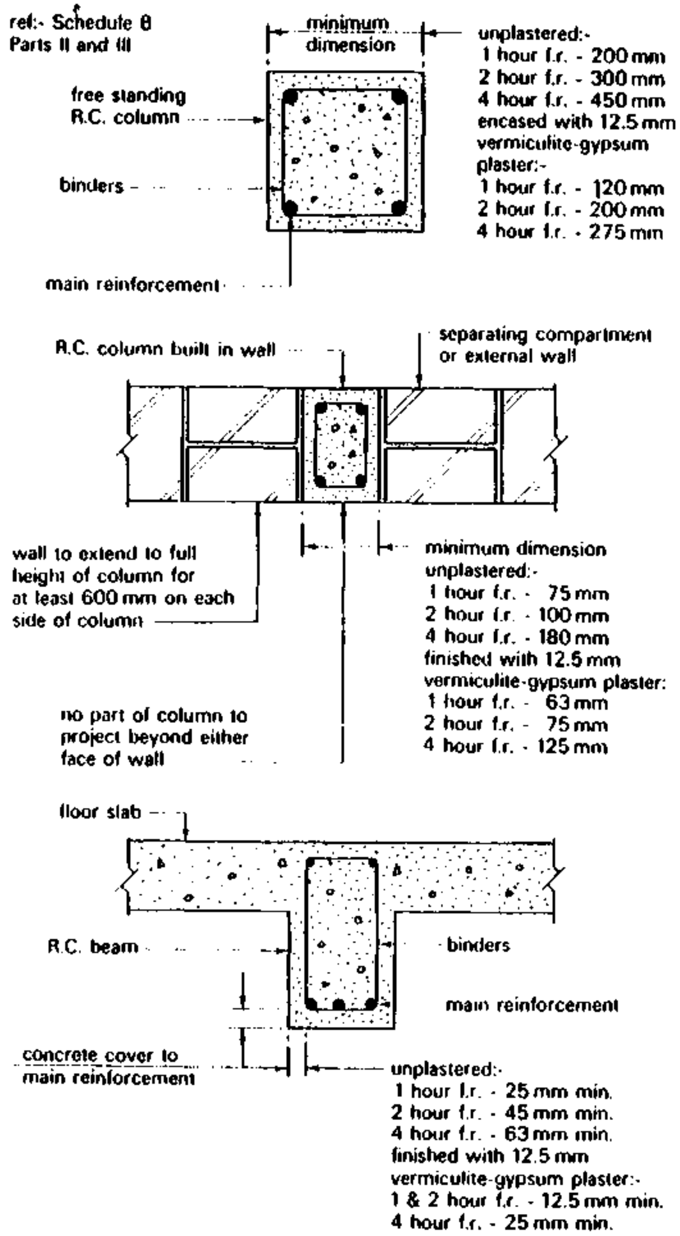

Fire resistance—R.C. columns and beams

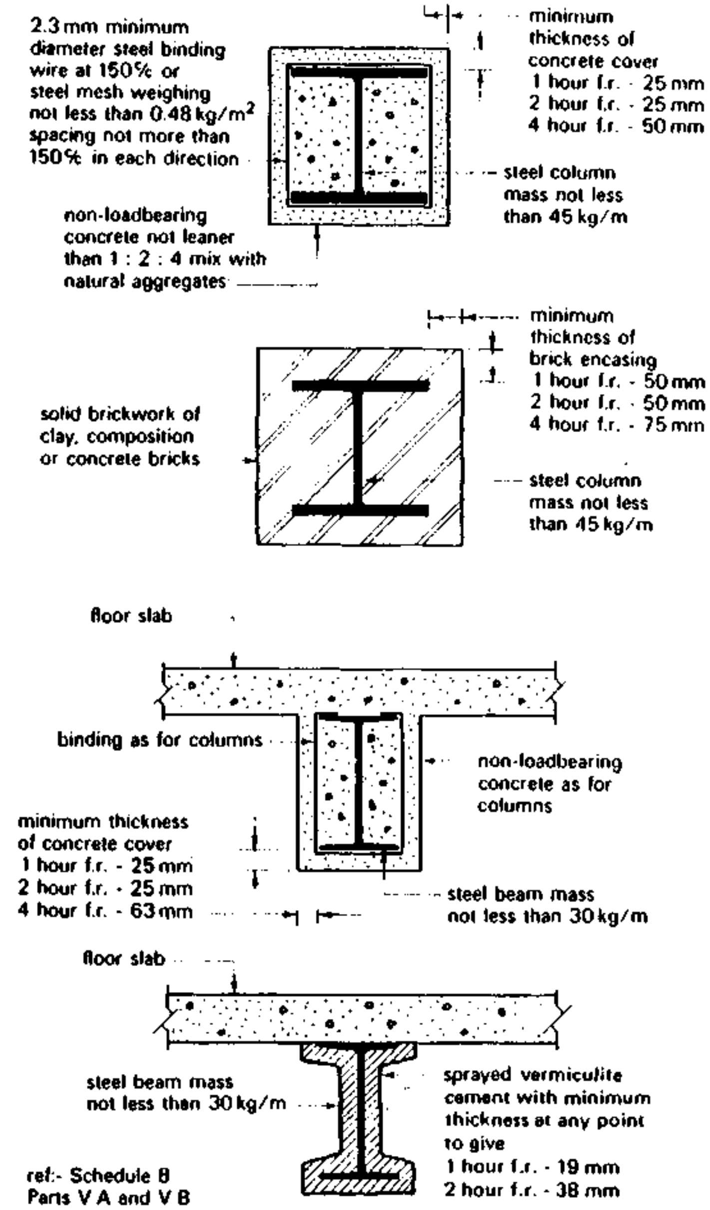

Fire resistance—steel columns and beams

● COLUMNS & BEAMS

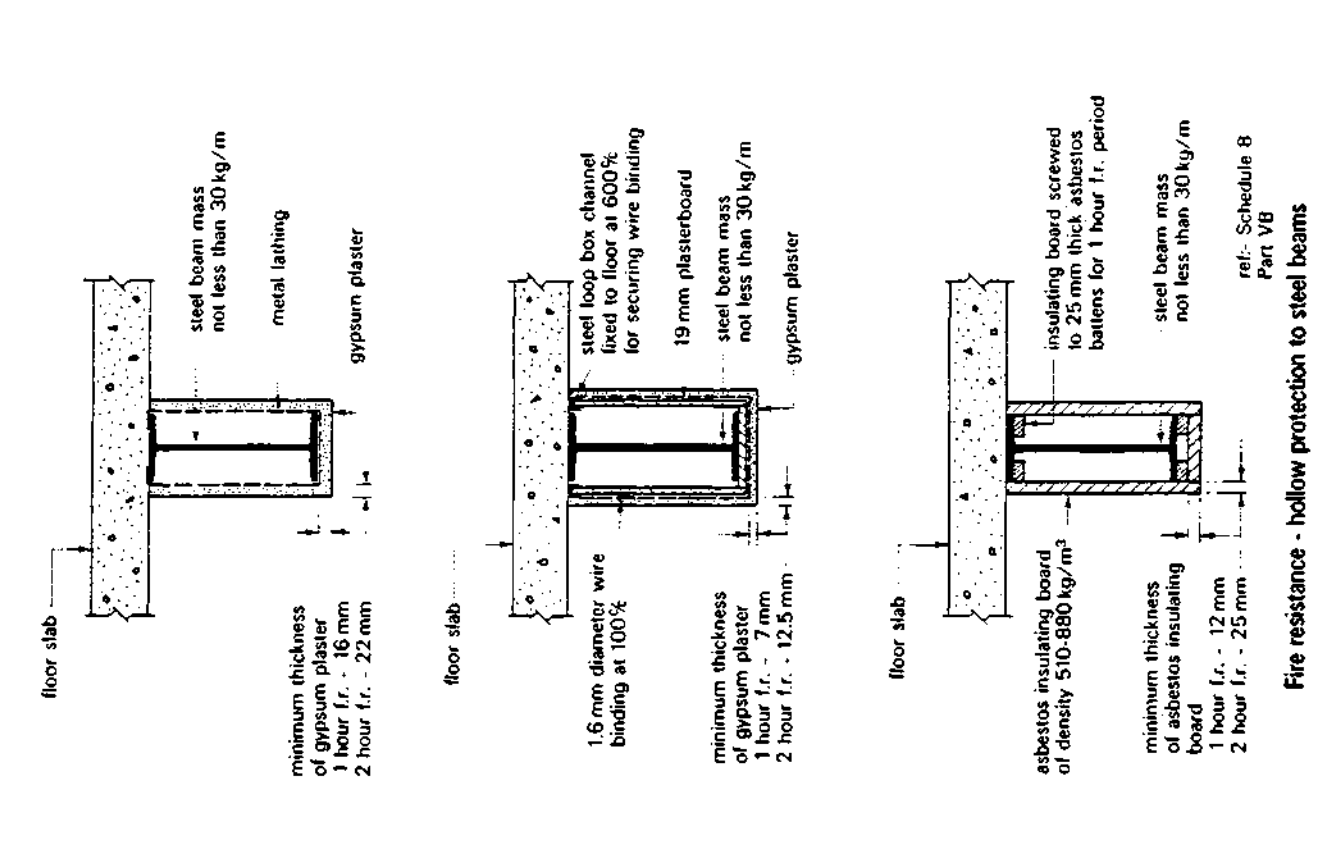

Fire resistance - hollow protection to steel beams

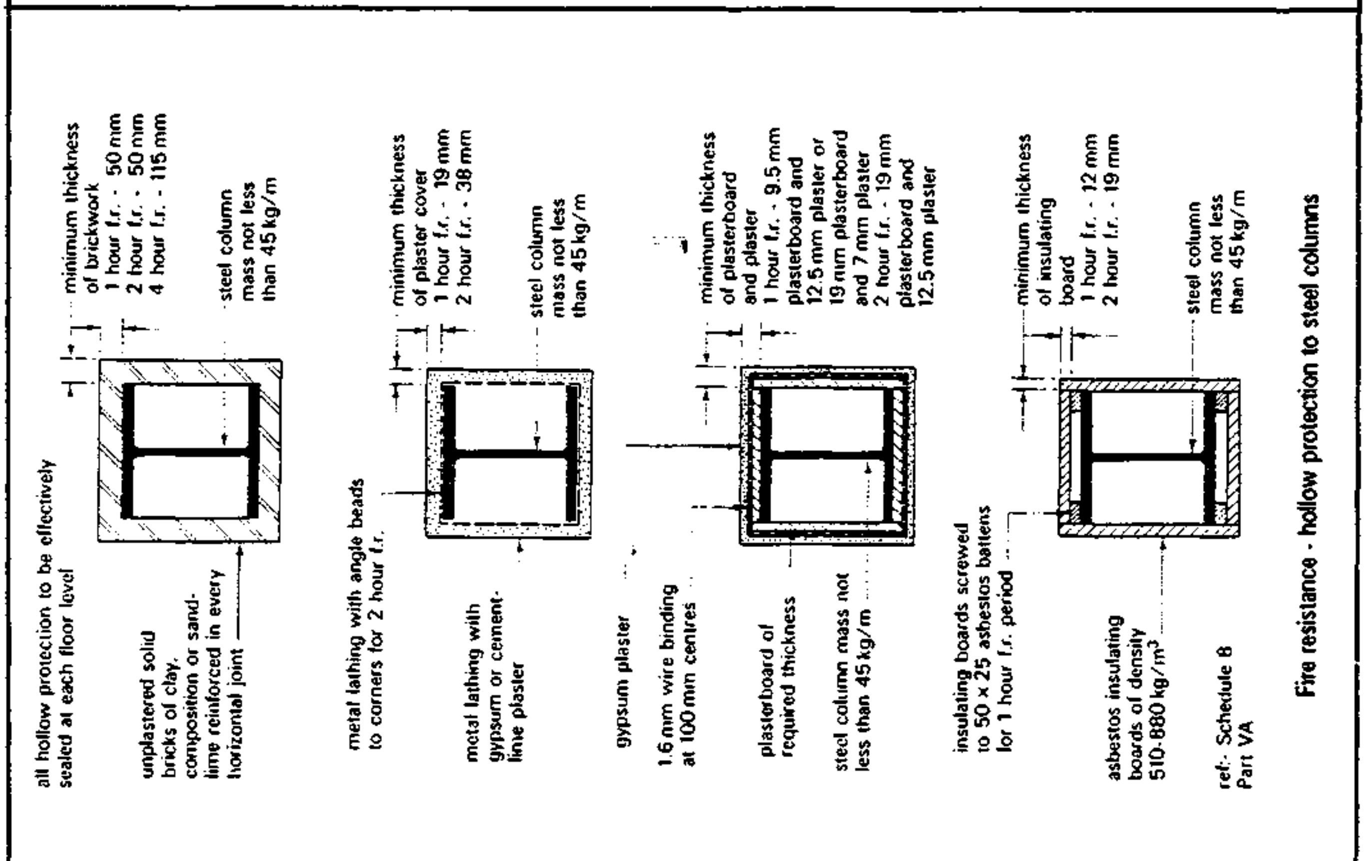

Fire resistance - hollow protection to steel columns

11. PROTECTION	FIRE PROTECTION	BUILDING CONSTR.
compiled : D. VOLKE		LECTURE
MAR. '83		CET 6031/1 11.4 18

• FLOORS

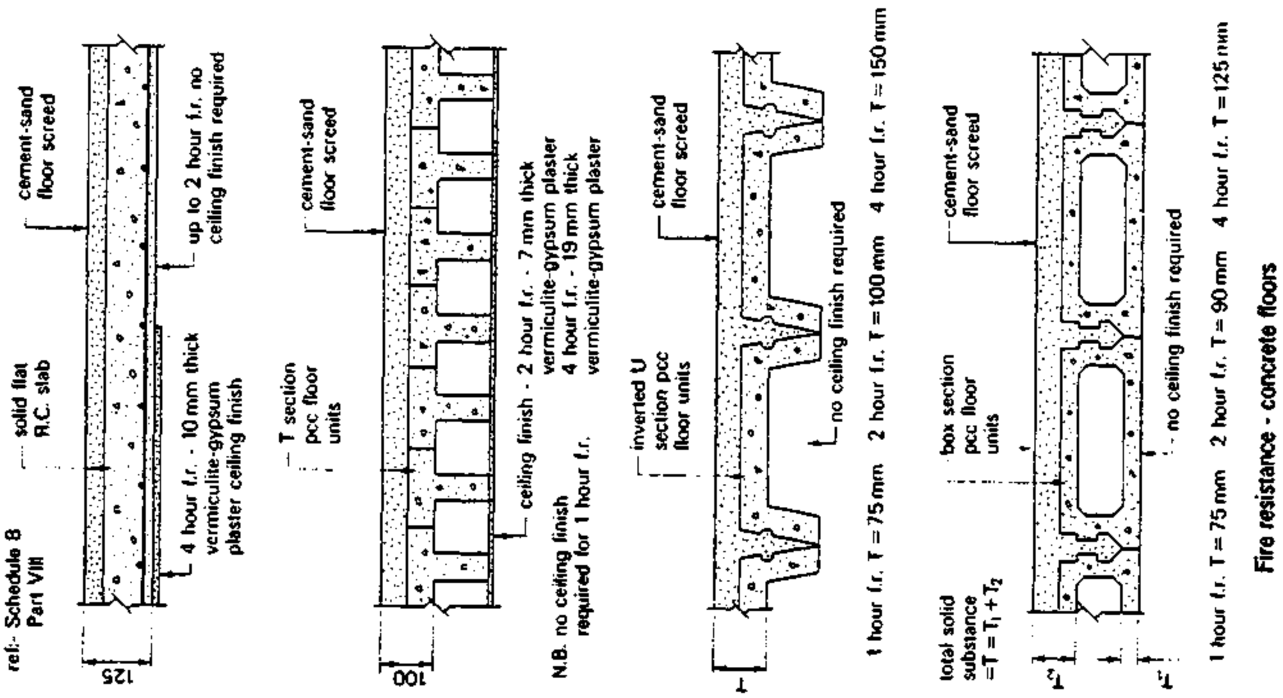

Fire resistance - concrete floors

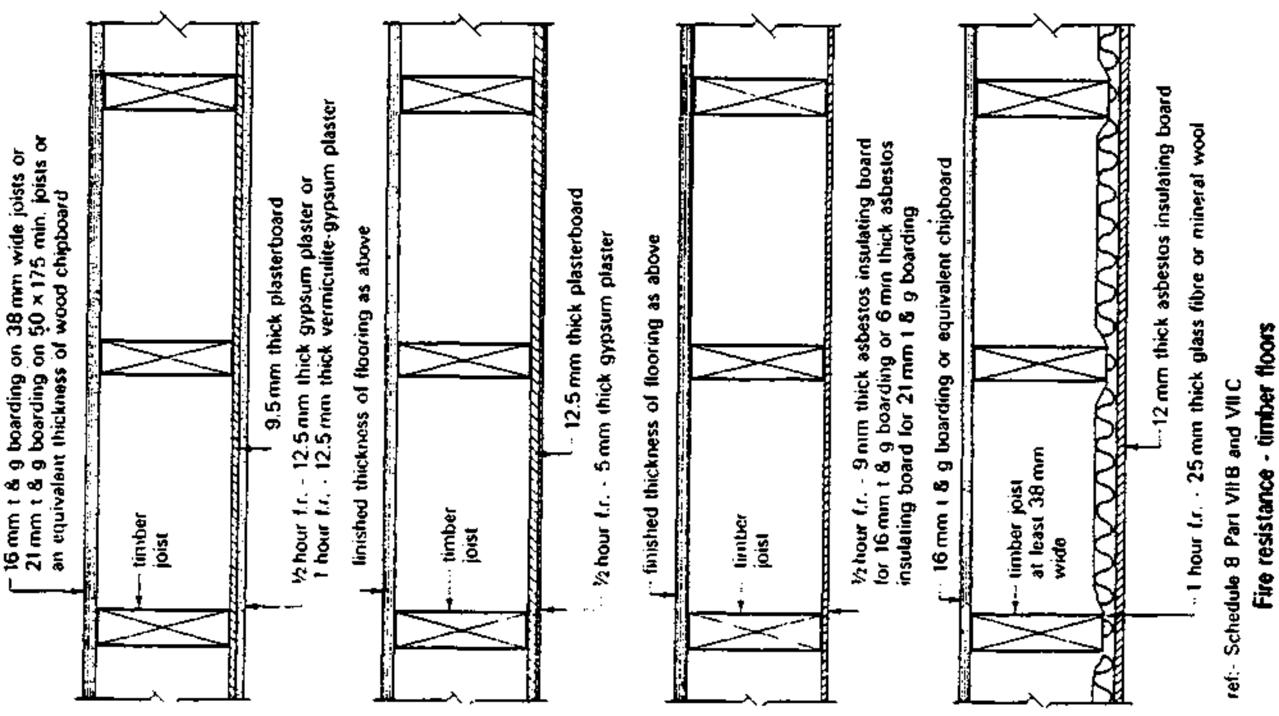

Fire resistance - timber floors

●●REPETITION ● exercises ● REPETITION ●●

Try to answer the following QUESTIONS and practice sketching where ever necessary and possible.

1. Exclusion of Water
   - Why must WATER be totally excluded from the interiors of buildings;
   - What are the three main sources of MOISTURE in buildings?
   - Write notes on PRECIPITATION!
   - Describe different ways of ROOF DRAINAGES!
   - Describe damages caused by FLOODING!
   - Where can DROUGHT occur and what does it cause;
   - Which two methods of MOISTURE CONTROL are normally employed?

2. Thermal Insulation
   - Define the term THERMAL INSULATION
   - In which three ways can the TRANSFER OF HEAT occur?
   - What are the ADVANTAGES OF thermal insulation of buildings?
   - Which factors are important in selecting or specifying thermal insulating materials?
   - List and describe different insulating materials

3. Sound Insulation
   - Define the following terms:

. Sound	. internal noise sources
. Pitch	. external noise sources
. Loudness	. airborn sounds
. Frequency	. impact sounds

   - What is the most effective barrier to the passage of sound through materials?
   - Explain in the form of neat sketches examples of Sound insulation in
     a WALLS
     b FLOORS
   - Write notes on EXTERNAL NOISE!

4. Fire Protection
   - What are the three main fields of FIRE PROTECTION?
   - Write notes on STRUCTURAL FIRE PROTECTION!
   - Define the term FIRE LOAD
   - List different building materials and describe their behaviour under intense heat or fire.

Building Reg. E1 — fire stop means a barrier or seal which would prevent or retard the passage of smoke or flame within a cavity, around a pipe where it passes through a wall or floor or at junctions between elements of structure

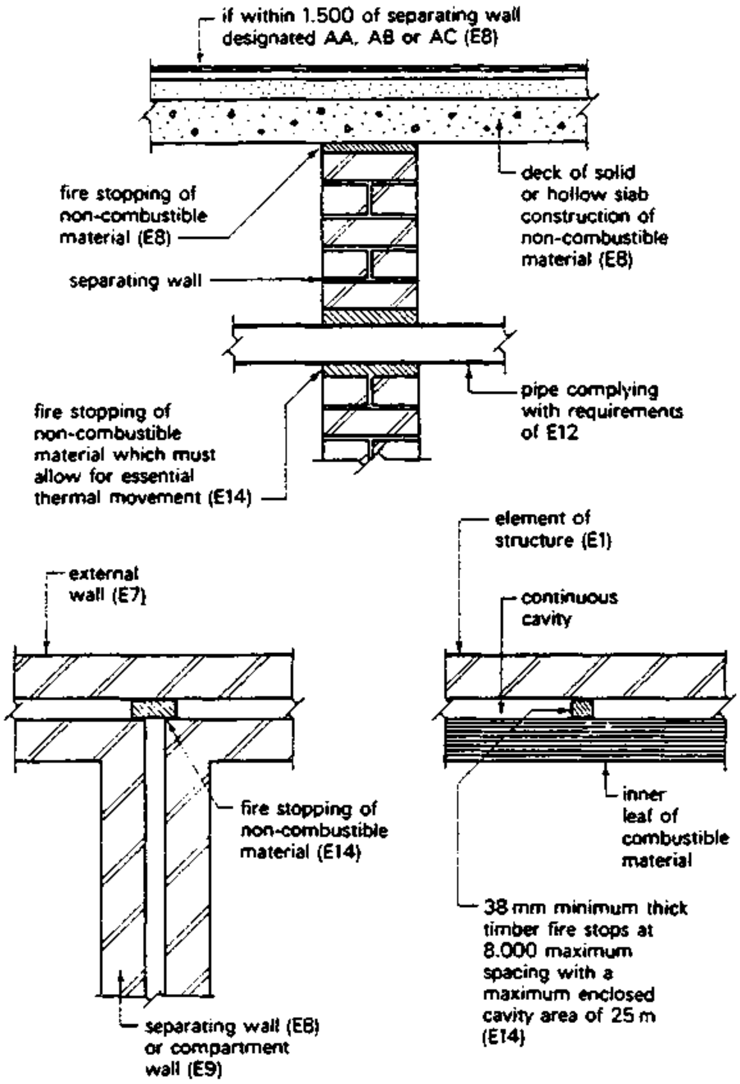

- Show in the form of neat sketches typical examples of working details for the fire protection of:
  - . Walls of masonry construction
  - . Framed and composite walls
  - . R. C. columns and beams
  - . Steel columns and beams
  - . Hollow protection to steel columns
  - . Hollow protection to steel beams
  - . Timber floors
  - . Concrete floors

12.FINISHING &. FINISHES

CONTENTS:

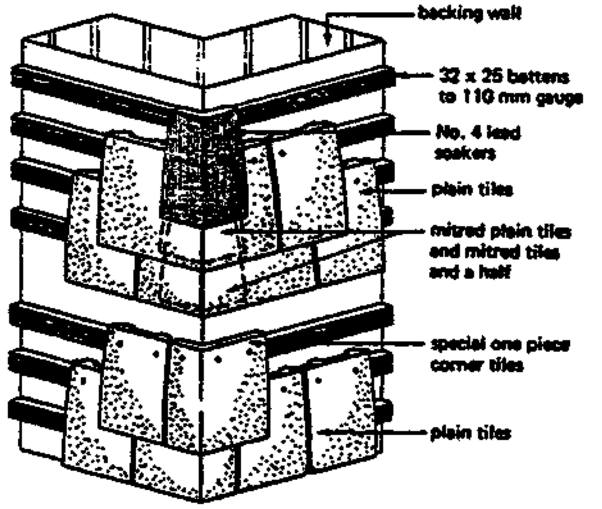

Alternative external angle treatments (internal angles treatments similar)

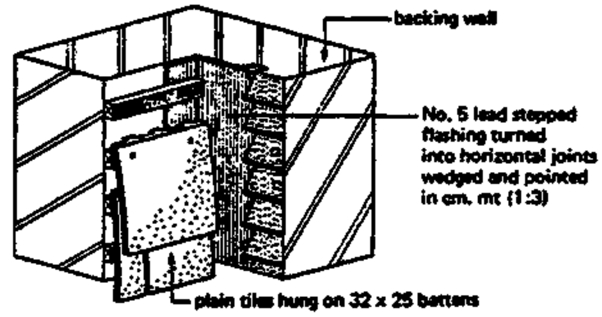

Typical abutment detail

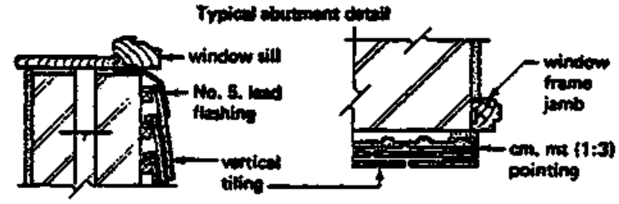

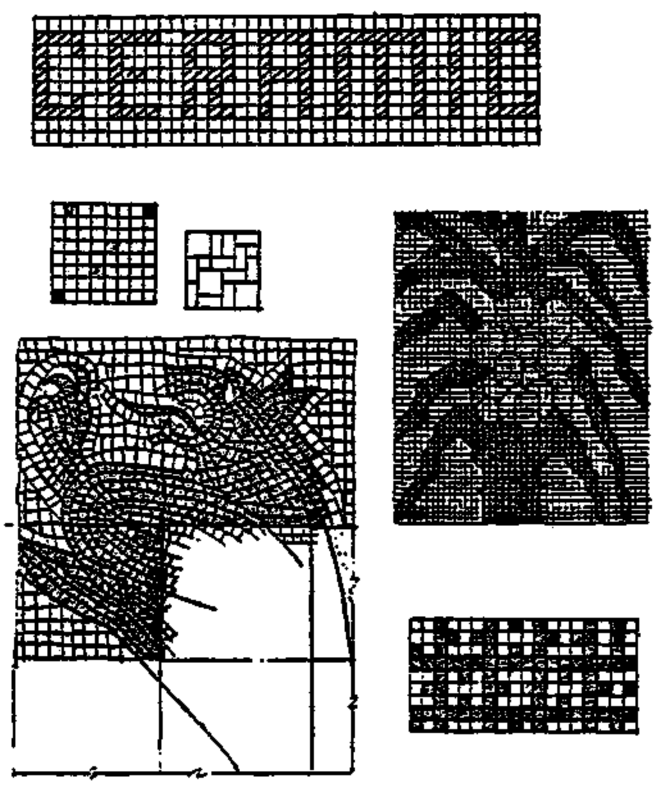

REFERENCES:

1. R. Churley
"CONSTRUCTION TECHNOLOGY"
Volume 1,2,3,4

2. R.L. Fullerton
"BUILDING CONSTRUCTION IN WARM CLIMATES"
Volume 1,2,3

3. W.G. Nash
"BRICKWORK 2"

12.1 EXTERNAL WALL FINISHES

12.1 EXTERNAL WALL FINISHES

External brickwork with an exposed face of facing bricks is a SELF FINISH and requires no further treatment.

External walls of common bricks or blocks can be treated to give an acceptable appearance by the application of PAINT, an application wall finish such as RENDERING or can be CLAD with boards or tiles.

EXTERNAL RENDERING

12.1.1 External Rendering
This is a form of plastering using a mixture of cement and sand, or cement, lime and sand, applied to the face of a building to give extra protection against the penetration of moisture or to provide a desired texture. It can also be used in the dual capacity of providing protection and appearance.
The rendering must have the properties of
- durability
- moisture resistence
- an acceptable appearance

The sucess of the rendering depends on
- the nature of the background
- the quality of the mix
- the location of the work
- the method of application.

. Good quality brick - or blockwork with raked joints and locked surface will give good results if the wall is wetted to reduce heat and suction.
. SPATTERDASH, i.e. cement and sand slurry 1:3 on concrete walling gives good results in bonding.

. The mix of materials is as important as their quality. Cement and sand mixes will produce a strong moisture resistant rendering but one which is subject to cracking due to high drying shrinkage.(These mixes are used mainly on members which may be vulnerable to impact damage such as columns.)
Cement, lime and sand mixes have a lower drying shrinkage but are more absorbent than cement and sand mixes; they will, however, dry out rapidly after periods of rain and are therefore the mix recommended for general use.

EXTERNAL RENDERING

Two common volume mix ratios are:
a)1:1/2 : 4-4 1/2
cement:lime:sand,
which is used for dense, strong backgrounds of moderate to severe exposure and for application to metal lathing or expanded metal backgrounds.
b)1 : 1 : 6-8
cement : lime : sand
which is for general use.

a) 1:1/2 : 4-4 1/2

b) 1 : 1 : 6-8

- The number of coats required will depend upon the surface condition of the background and the degree of exposure. Generally a TWO COAT application is acceptable, except where the background is very irregular or the building is in a position of severe exposure when a three coat application would be specified.
  The thickness of any one coat should not exceed 15 mm and each subsequent coat is about 5 mm thick.
- Finishes should be floated, not trowelled smooth.
- Various textured surfaces can be obtained on renderings by surface treatments such as scraping the surface with combs, saw blades or similar tools to remove a surface skin of morter. These operations are carried out some three to four hours after the initial application of the rendering and before the final set takes place.

EXTERNAL RENDERING

- Alternative treatments are:

1. ROUGHCAST: a wet plaster mix of 1 part cement : 1/2 part lime : 1 1/2 parts shingle : 3 parts sand, which is thrown on to a porous coat of rendering to give an even distribution.
2. PEBBLEDASH: selected aggregate such as pea shingle is dashed or thrown on to a rendering background before it has set and is tamped into the surface with a wood float to obtain a good bond.
3. SPATTERED FINISHES: these are finishes applied by a machine (which can be hand operated), guns or sprays using special mixes prepared by the machine manufacturers.
4. TYROLEAN FINISH: it consists of 3 coats alltogether.
   1.coat: 1part waterproof cement
   2 parts of sand
   (applied as spatter dash)
   2.coat: 1part of cement
   1part of lime
   8parts of sand
   (15mm thick)
   3.coat: 1part cullamix or snowcrete Tyrolean grade,2 1/2 parts sand applied by a special hand machine, which flips the mix evenly over the wall

   It provides a pleasing and waterproof finish.

MATERIALS

- Quality of materials:
  - sand: should be washed, if dirty and thrown through a sieve.
  - lime: should be well burned and free from unslaked particles.
  - cement: can be a problem, because the quality of local factories is not always in conformity with B.S.
    Therefore the local cement should be tested and compared with B.S. Specifications.
    The most practical test, however, is to lay a sample panel of specified rendering on a wall as soon als the job begins and note the result some month later.

12.1.2 Concrete Finishes

There are a number of methods of finishing concrete walls apart from rendering or painting. The main treatments are to:

- leave it untouched after striking the shuttering
- use formwork other than timber
- use a retarding agent
- make a punched or tooled finish
- make patterns on the formwork.

. The texture of the finish created by the formwork depends on the boards used and the quality of the workmanship.

. Hardwood does not produce the grain effects of soft wood.

. Boards are more difficult to "true up" owing to poor seasoning and warping of timber.

. Tight joints in concrete should be ensured and boards levelled up to the same height.

. Day joints in concrete must be carefully constructed.

. Fins of concrete should be removed immediately the formwork is struck and the whole tubbed down with carborundum.

. Mortar to repair blemishes should be of lighter texture than the concrete it self otherwise it will dry darker. - It should be floated - not trowelled smooth.

. Corrugated metal shuttering is frequently used for effect and comes away easily.

. Plastic-moulded forms produce effects but are expensive.

. Retarding agents are normally brushed on to the formwork before concreting is started, and must be applied evenly. After striking, the concrete surface is brushed to expose the aggregate.

. A tooled finish is normally achieved by electric or pneumatic hammers with special heads. The can be varied to suit the texture required. Bush hammering is a favourite finish. Hand-tooling is done where labour is cheap, or where mechanical hammers could damage corners.

. Care should be taken that tooling does not expose the reinforcement.

CLADDING

12.1.3 Cladding

The term CLADDING is used when thin concrete, stone, granite, marble or slate is employed as a facing in addition to the normal structural requirements. It should not be fixed too tightly to the structure, for some measure of give must be allowed so that the cladding does not bear the strain of the finished construction.

ADVANTAGES

Cladding has several advantages over traditional types of construction.

1. The units can be prepared in a factory, where their production is not hampered by bad weather conditions, and where good quality control can be maintained.

2 They can be produced in readiness for fixing while the framework is being built.

3 The units do not carry any structural loads (other than their own weight) and therefore they may be comparatively thin.

4 A wide variety of surface finishes is available

5 The framework and internal lining can be erected comparatively quickly, so that the internal finishes and services can be put into operation very soon after fixing the external cladding.

Certain points, however, must be observed if failures are to be avoided with this type of construction. Some, of course, are the responsibility of the designer, but the cladding fixer must also play his part by making certain that the fixings are securely made and that all types of joints are constructed in accordance with approved practice.

CLADDING

Important points for the designer:
He should:

1 allow for the thermal movement of the structure
2 allow for movement due to drying shrinkage (The finxing of the slabs should not be started too soon after the main structure. Some time must be allowed for the shrinkage in the framework to take place)
3 allow for elastic deformation particularly with wind loading on tall slender buildings.
4 allow for creep, which is a gradual compression of the structure due to sustained stress. Great care must be, therefore, taken with the compression joints.
5 allow for uneven settlement of the structure
6 avoid the use of a cladding material which is too thin, thus preventing adequate and safe fixing methods from being used
7 provide well designed cramping details
8 ensure that bonder courses or other means of supporting the weight of the cladding are provided at each storey height
9 avoid using slabs of too large an area which would reduce the number of joints and probably absorb movement
10 specify the correct metal for the fising cramps.

Important points for the cladding fixer:
He should:

1 point the joints thoroughly to prevent the percolation of water behind the slabs (This will have a particularly harmful effect in the winter if the water freezes)
2 use the correct type of fixing cramps as specified and not substitute different types or metals

3 make certain that the bonders or supporting nibs are well constructed

4 ensure accurate setting out of the fising holes and slots

5 not use hard mortars for the joints

6 have sufficient thickness of the joints

7 construct expansion and compression joints in accordance with the designer's requirements

8 ensure that the correct gap is maintained at a maximum of 18 mm and a minimum of 6mm. (If these limits are exceeded then the cramps will be either too short or too long and liable to lead to makeshift adaptations)

9 Take precautions against rusting of the reinforcement, which might cause damage to the cladding, if for any reason the concrete structural wall has to be cut back.

for the designer

for the cladding fixer

CLADDING

Cramps and other fixings

These should be made from:

1 non-ferrous metal, for example copper, gun-metal, phosphor bronze

2 stainless steel alloys

3 sherardised steel.

It is preferable that all the fixings on each job are of the same metal to prevent the possibility of electrolytic action taking place between dissimilar metals. This is likely to cause deterioration in at least one of the metals. Iron or steel are not generally suitable for use as cramps or fixings even though they may be coated, as the coating may become damaged and allow the steel to rust and cause staining on the cladding surface, or expansion which is likely to damage the cladding at the joints, or by spalling of the surface.

Cramp holes or mortices.

These should be cut or drilled in the cladding without fracturing or spalling the material immediately surrounding the hole.
Claddings to buildings can be considered under two classifications

1 Claddings fixed to a structural backing

2 Claddings to framed structured.

CLADDINGS fixed to a STRUCTURAL BACKING

12.1.3.1 CLADDINGS FIXED TO A STRUCTURAL BACKING

Materials used in this form of cladding are generally considered to be small unit claddings and are applied for one of two reasons. If the structural wall is unable to provide an adequate barrier to the elements a covering of small unit claddings will generally raise the wall's resistance to an acceptable level. Alternatively small unit claddings can be used solely as a decorative feature, possibly to break up the monotony of a large plain area composed of a single material.

The materials used are tiles, slates, shingles, timber boarding, plastic boards and stone facings. The general method of fixing these small units is to secure them to timber battens fixed to the structure backing.

TILE HANGING

- TILE HANGING

The tiles used in tile hanging can be ordinary plain roofing tiles or alternatively a tile of the same dimensions but having a patterned bottom edge solely for a decorative appearance. The tiles are hung and fixed to tiling battens although nibless tiles fixed directly to the backing wall are sometimes used (see Fig.) The battens should be impregnated to prevent fungi and isect attack so that their anticipated life is comparable to that of the tiles. Each tile should be twice nailed to its support batten with corrosion resistant nails of adequate length.

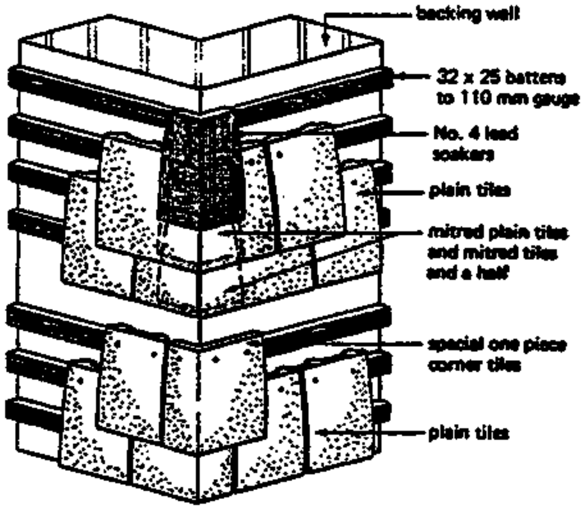

Alternative external angle treatments (internal angles treatments similar)

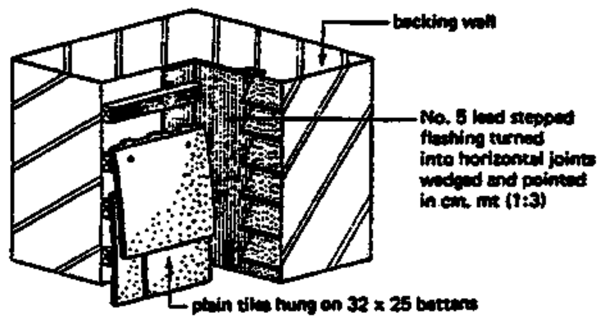

Typical abutment detail

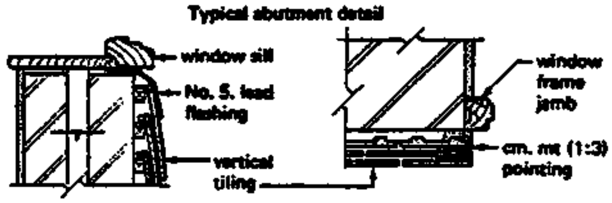

Typical opening details

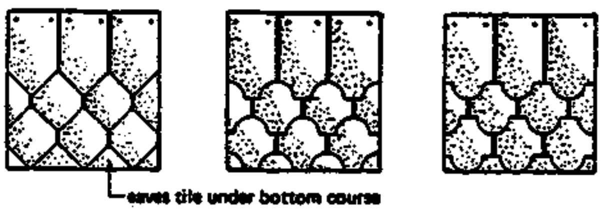

Pointed pattern — Fishtail pattern — Club pattern

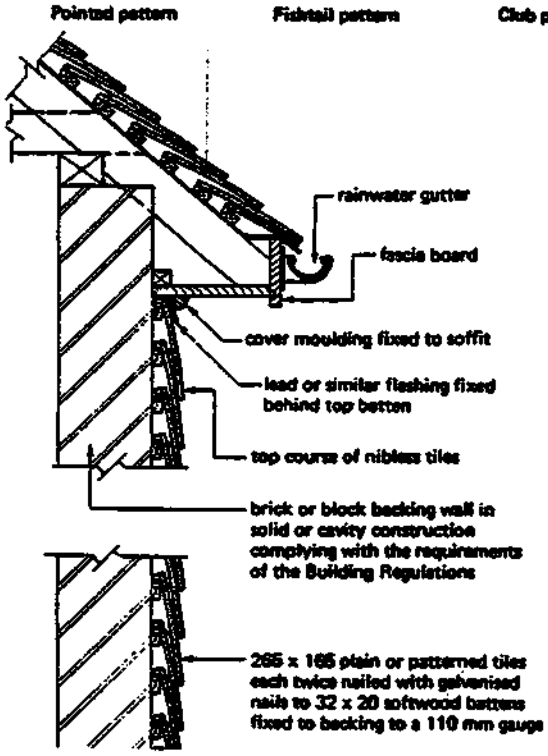

The general principles of tile hanging are similar to those of double lap roof tiling and the gauge is calculated in the same manner. The minimum lap recommended is 40 mm which would give a gauge of 112.5 mm using a standard 265 long tile.

A gauge dimension of 112.5 mm is impracticable and therefore a gauge of 110 mmwould be usual.

TILE HANGING

Typical details of top edge finishes, bottom edge finishes corners and finishes at windows are shown in the fig.
It should be noted that if the structural backing is of timber framing a layer of impervious felt should be placed over the framing immediately underneath the battens to prevent any moisture which is blown in between the tiles from having adverse effects upon the structure. In this situation building paper is not considered to be a suitable substitute. The application of slates as a small unit hung cladding follows the principles outlined above for tile hanging.

TIMBER CLADDINGS

- TIMBER CLADDINGS

Timber claddings are usually in the form of moulded or shaped boards fixed to battens as either a horizontal or vertical cladding. Timber claddings will require regular maintenance to preserve their resistance to the elements. Softwoods are generally painted and will need repainting at intervals of three to five years according to the exposure. Hardwoods are sometimes treated with a preservative and left to bleach naturally; the preservative treatment needs to be carried out at two-to five-year intervals. Western red cedar is a very popular wood for timber cladding since it has a natural immunity to insect and fungi attack under normal conditions. It also has a pleasing natural red/brown colour which can be maintained if the timber is coated with a clear sealer such as polyurethane, however, it will bleach to a grey/white colour if exposed to the atmosphere. Plastic boards are a substitute for timber and are fixed in a similar manner.

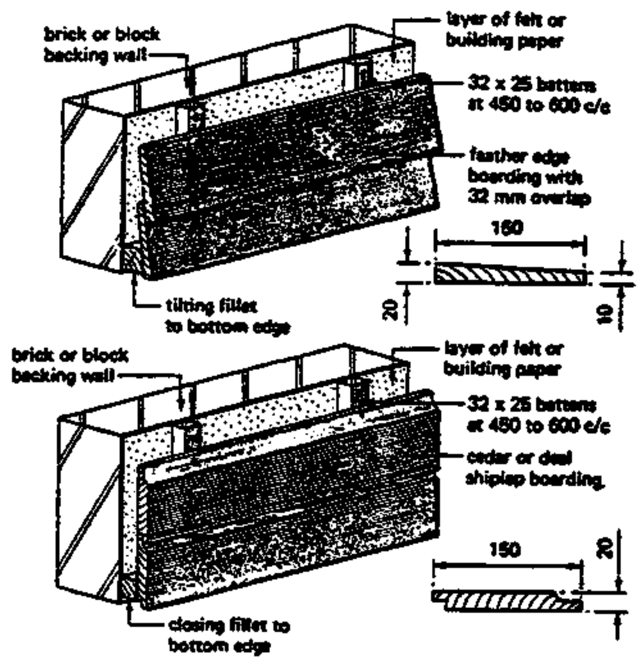

Typical horizontal claddings

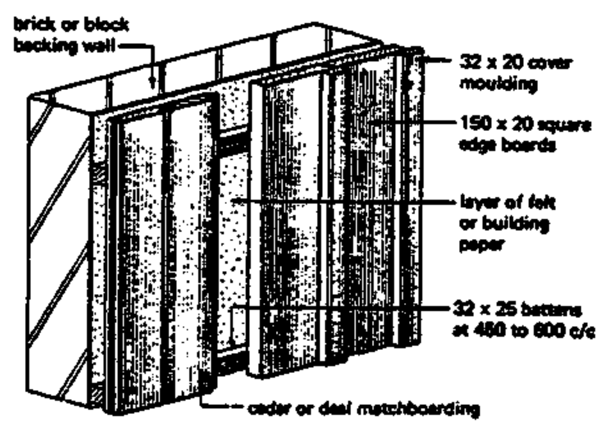

Typical vertical cladding

CLADDINGS to FRAMED STRUCTURES

12.1.3.2 CLADDINGS TO FRAMED STRUCTURES

Claddings are a form of masking or infilling a structural frame and can be considered under the following headings:

1 Panel walls with or without attached facings

2 Concrete and similar cladding panels..

3 Light infill panels

4 Curtain walling which can be defined as a sheath cladding which encloses the entire structure

All forms of cladding must fulfil the following functions:

1 Be self supporting between the framing members

2 Provide the necessary resistance to rain penetration.

3 Be capable of resisting both positive and negative wind pressures.

4 Provide the necessary resistance to wind penetration

5 Give the required degree of thermal insulation

6 Provide the required degree of sound insulation to suit the building type.

7 Give the required degree of fire resistance

8 Provide sufficient openings for the admittance of natural daylight and ventilation

9 Be constructed to a suitable size.

BRICK PANEL WALLS

- BRICK PANEL WALLS

These are non-load bearing walls which must fulfil the following requirements:

1 Adequate resistance to the elements

2 Have sufficient strength to support their own self weight plus any attached finishes.

3 Strong enough to resist both positive and negative wind pressures

4 Provide the required thermal and sound insulation.

5 Provide the required fire resistance

6 Have adequate durability

BRICK PANEL WALLS

Brick panel walls are constructed in the same manner as ordinary solid or cavity walls and any openings for windows or doors are formed by traditional methods. The panels must be supported at each structural floor level and tied to the structure at the vertical edges. Projection of the panel in front of the structural members is permissible providing such overhangs do not impair the stability of the panel wall; acceptable limits are shown in the fig. The top edge of the panels should not be pinned rigidly to the frame since the effect of brick panel expansion together with frame shrinkage may cause cracking and failure of the brickwork. A compression joint should therefore be formed between the top edge of the panel and the underside of the framing member at each floor level (see fig.)

Two methods of tying the panel to the vertical structural members are in common use:

1 Butterfly wall tiles are cast into the column and built into the brick joints at four-course intervals.

2 Galvanised pressed steel dovetail slots are cast into the column and dovetail anchors are used to form the tie (see fig.)

The second method gives greater flexibility with the location and insertion of adequate ties but is higher in cost.

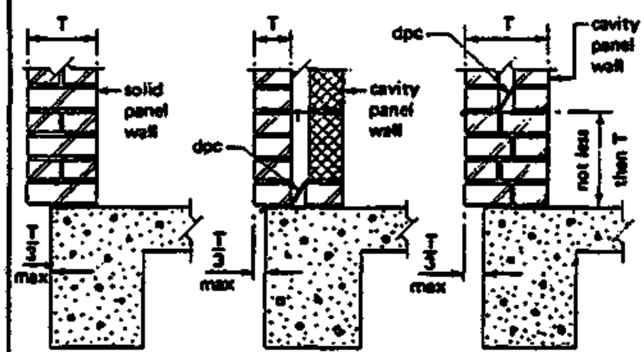

Maximum overhang for panel walls

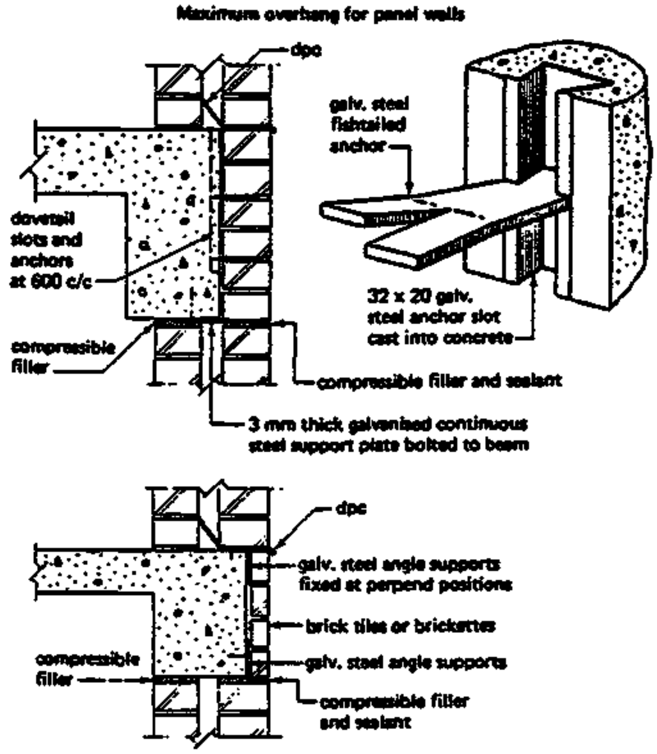

Typical beam facing details

Brick panel walls

FACINGS

Facings to brick panel walls.

Any panel wall must have an acceptable and durable finish; this can be achieved by using facing bricks with a neat pointed joint or by attaching to the face of a panel of common bricks a stone or similar cladding. Suitable materials are natural stone, artificial stone, reconstructed stone and precast concrete of small units up to 1 m^2 and with a thickness related to the density of the material. Dense materials such as slate and marble need only be 40 mm thick, whereas the softer stones such as sandstone and limestone should be at least 75 mm thick.

Two major considerations must be taken into account when deciding on the method to be used to fix the facings to the brick backing:

1 Transferring the load to the structure

2 Tying back the facing units.

The load of the facings can be transferred by using bonder stones or support corbels at each floor level, which should have a compression joint incorporated in the detail for the same reasons given above when considering brick panels (see fig.).

The tying back of the facings is carried out by various metal such as gunmetal, copper, phosphor bronze or stainless steel. To avoid the problem of corrosion caused by galvanic action between dissimilar metals a mixture of fixing materials should not be used. Typical examples of fixings and cramps for thick and thin facings are shown in fig.

To provide for plumbing and alignment a bedding space of 12 - 15 mm should be left between the face of the brick panel and the back of the facing. Dense facings such as marble are usually bedded on a series of cement mortar dabs, whereas the more porous facings are usually placed against a solid bed which ensures that any saturation which occurs will be uniform over the entire face.

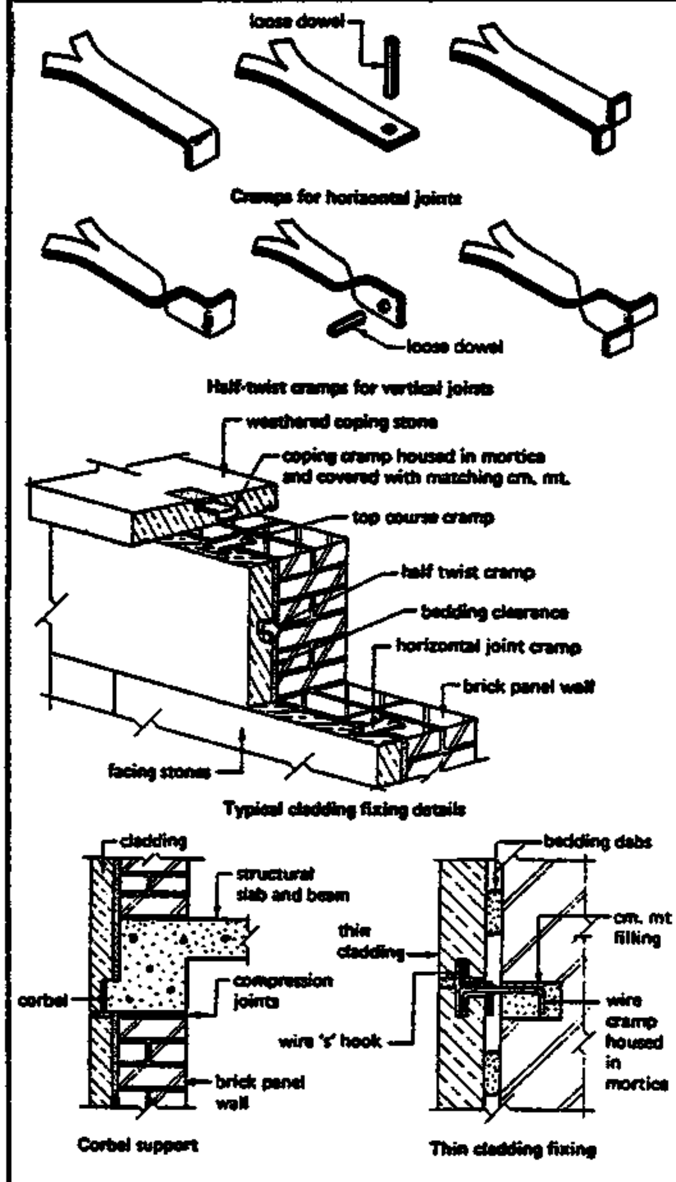

Cladding fixings

CONCRETE CLADDING PANELS

- CONCRETE CLADDING PANELS

These are usually made of precast concrete with a textured face in a storey height or undersill panel format. The storey height panel is designed to span vertically from beam to beam and if constructed to a narrow module will give the illusion of a tall building. Undersill panels span horizontally from column to column and are used where a high wall/window ratio is required. Combinations of both formats are also possible.

Concrete cladding panels should be constructed of a dense concrete mix and suitably reinforced with bar reinforcement or steel welded fabric. The reinforcement should provide the necessary tensile resistance to the stresses induced in the final position and for the stresses set up during transportation and hoisting into position. Lifting lugs, positions or holes should be incorporated into the design to ensure that the panels are hoisted in the correct manner so that unwanted stresses are not induced. The usual specification for cover of concrete over reinforcement is 25 mm minimum. If thin panels are being used the use of galvanised or stainless steel reinforcement should be considered to reduce the risk of corrosion.

When designing or selecting a panel the following must be taken into account:

1 Column or beam spacing
2 Lifting capacities of plant available
3 Jointing method
4 Exposure conditions
5 Any special planning requirements as to finish or texture.

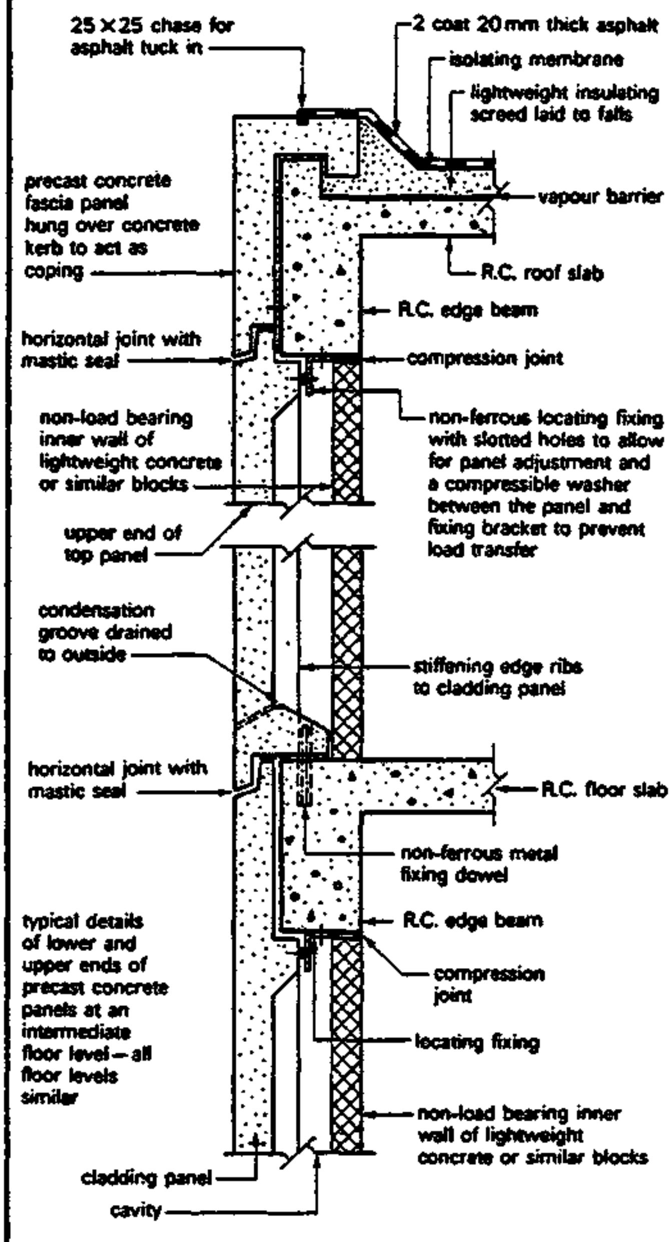

Typical storey height concrete cladding panel

CONCRETE CLADDING PANELS

The greatest problem facing the designer and installer of concrete panels is one of jointing to allow for structural and thermal movements and at the same time provide an adequate long term joint - see fig.

Where a stone facing is required to a framed structure, possibly to comply with planning requirements, it may be advantageous to use a composite panel. These panels have the strength and reliability of precast concrete panel design and manufacture but the appearance of traditional stonework. This is achieved by casting a concrete backing to a suitably keyed natural or reconstructed stone facing and fixed to the frame by traditional masonry fixing cramps or by conventional fixings - see fig.

Thermal insulation can be achieved when using precast concrete panes by creating a cavity as shown in the fig.

Concrete cladding panels can be large and consequently heavy. To reduce the weight they are often designed to be relatively thin (50 to 75 mm) across the centre portion and stiffened around the edges with suitably reinforced ribs which usually occur on the back face but can be positioned on the front face as a feature which can also limit the amount of water which can enter the joint.

Another form of cladding material which is beginning to gain popularity and acceptance is glass fibre reinforced plastics (GRP) which consists of pigments and a suitable catalyst as a hardener.

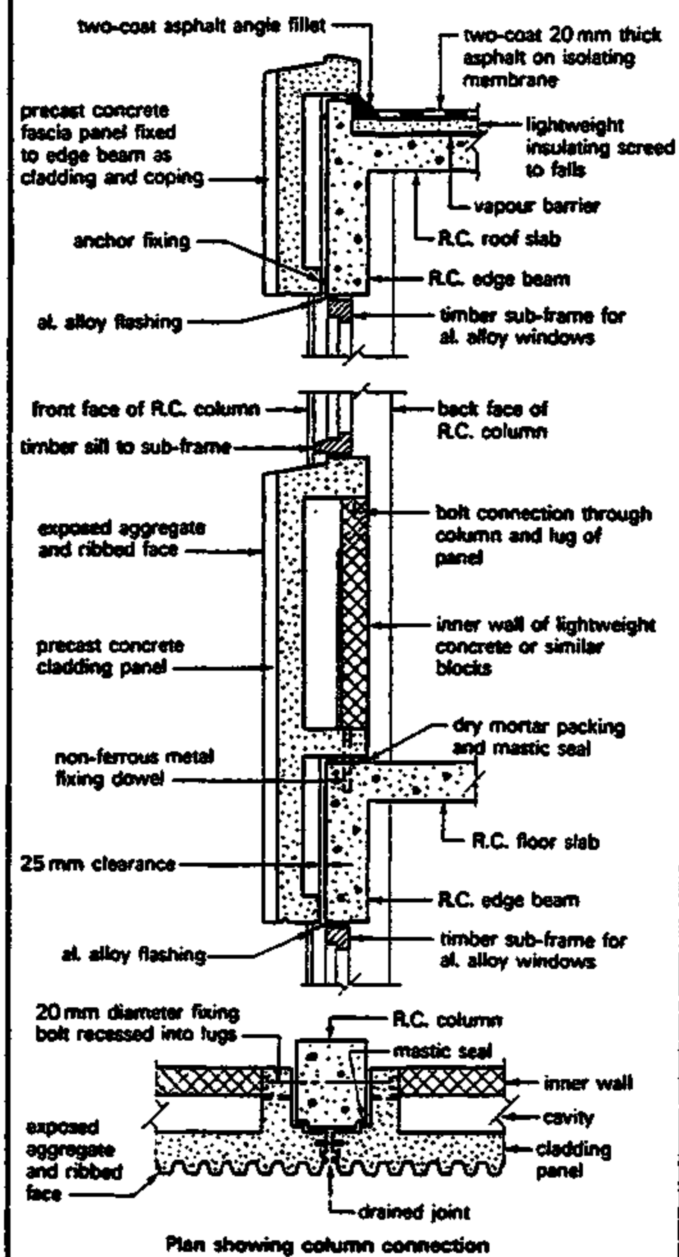

Typical undersill concrete cladding panel

CONCRETE CLADDING PANELS

The resultant panels are lightweight, durable, non-corrosive, have good weather resistance, can be moulded to almost any profile and have good aestetic properties. Students seeking further information are recommended to study the Building Research Establishment Digest 161.

INFILL PANELS

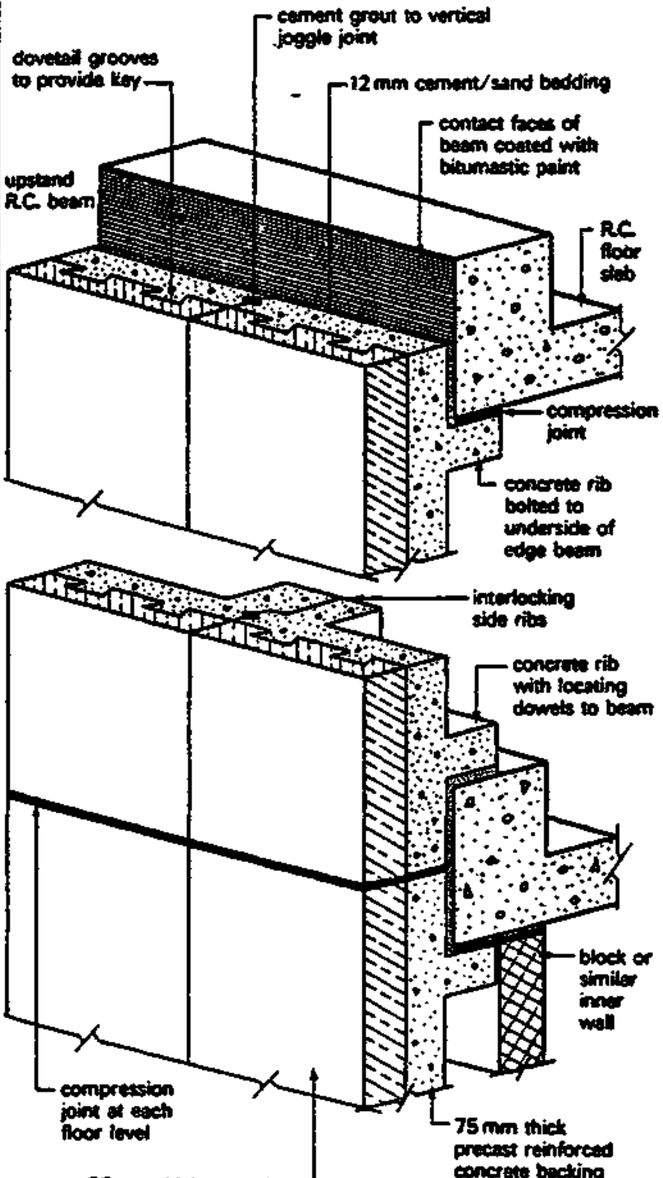

Typical storey height composite panel

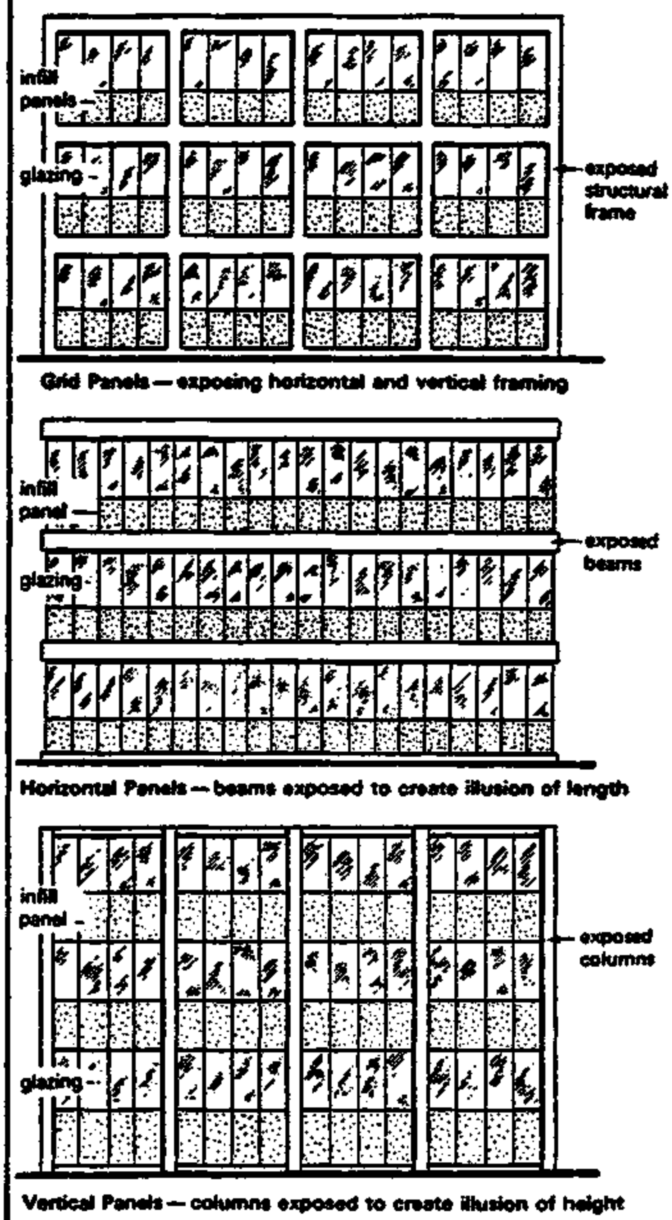

Typical infill panel arrangements

INFILL PANELS

- INFILL PANELS

Infill panels are lightweight and usually glazed to give good internal natural daylighting conditions. The panel layout can be so arranged to expose some or all of the structural members creating various optical impressions. For example, if horizontal panels are used, leaving only the beams exposed, an illusion of extra length and/or reduced height can be created. - see fig.
A wide variety of materials or combinations of materials can be employed such as timber, steel aluminium and plastic. Single and double glazing techniques can be used to achieve the desired sound or thermal insulation. The glazing module should be such that a reasonable thickness of glass can be specified.

The design of the 'solid' panel is of great importance since this panel must provide the necessary resistance to fire, heat loss, sound penetration and interstitial condensation. Most of these panels are of composite or sandwich construction as shown in the fig.

The jointing problem with infill panels occurs mainly at its junction with the structural frame and allowance for moisture or thermal movement is usually achieved by using a suitable mastic or sealant.

Most infill panels are supplied as a manufacturer's system, since purpose-made panels can be uneconomic, but whichever method is chosen the design aims remain constant; that is, to provide a panel which fulfils all the required functions and has a low long term maintenance factor. It should be noted that many of the essentially curtain walling systems are adaptable as infill panels which gives the designer a wide range of systems from which to select the most suitable.
One of the maintenance problems encountered with infill panels and probably to a lesser extent with the concrete claddings is the cleaning of the facade and in particular the glazing. All buildings collect dirt, the effects of which can vary with the material: concrete and masonry tend to accept dirt and weather naturally, whereas impervious materials such as glass do not accept dirt and can corrode or become less efficient.

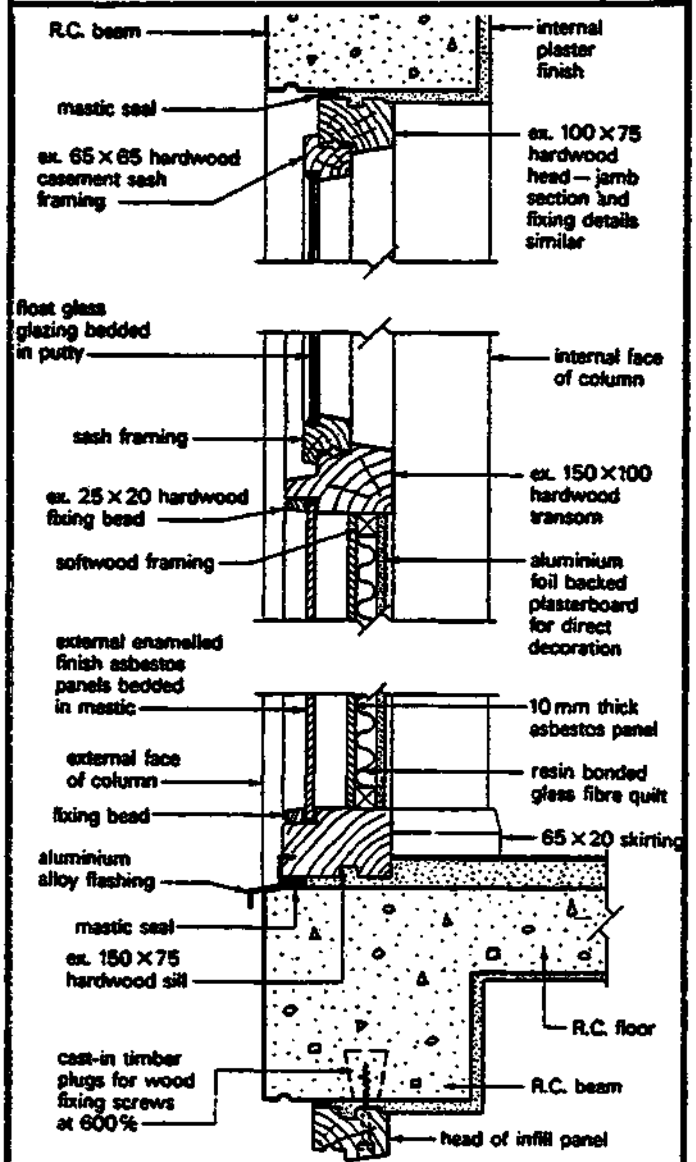

Typical timber infill panel details

INFILL PANELS

If glass is allowed to become coated with dirt its visual appearance is less acceptable, its optical performance lessens since clarity of vision is reduced and the useful penetration of natural daylight diminishes. The number of times that cleaning will be necessary depends largely upon the area, ranging from three-monthly intervals in non-industrial areas to six-weekly intervals in areas with a high pollution factor.

Access for cleaning glazed areas can be external or internal. Windows at ground level present no access problems and present only the question of choice of method such as hand cloth or telescopic poles with squeegee heads. Low and medium rise structures can be reached by ladders or a mobile scaffold tower and usually present very few problems. High rise structures need careful consideration. External access to windows is gained by using a cradle suspended from roof level; this can be in the form of a temporary system consisting of counterweighted cantilevered beams from which the cradle is suspended. Permanent systems, which are incorporated as part of the building design, are more efficient and consist of a track on which a mobile trolley is mounted and from which davit arms can be projected beyond the roof edge to support the cradle. A single track fixed in front of the roof edge could also be considered; these are simple and reasonably efficient but the rail is always visible and can therefore mar the building's appearance.

Internal access for cleaning the external glass face can be achieved by using windows such as reversible sashes, horizontal and vertical sliding sashes, but the designer is restricted in his choice to the reach possible by the average person.
It cannot be over emphasised that such windows can be a very dangerous hazard unless carefully designed so that all parts of the glazed area can be reached by the person cleaning the windows whilst he remains standing firmly on the floor.

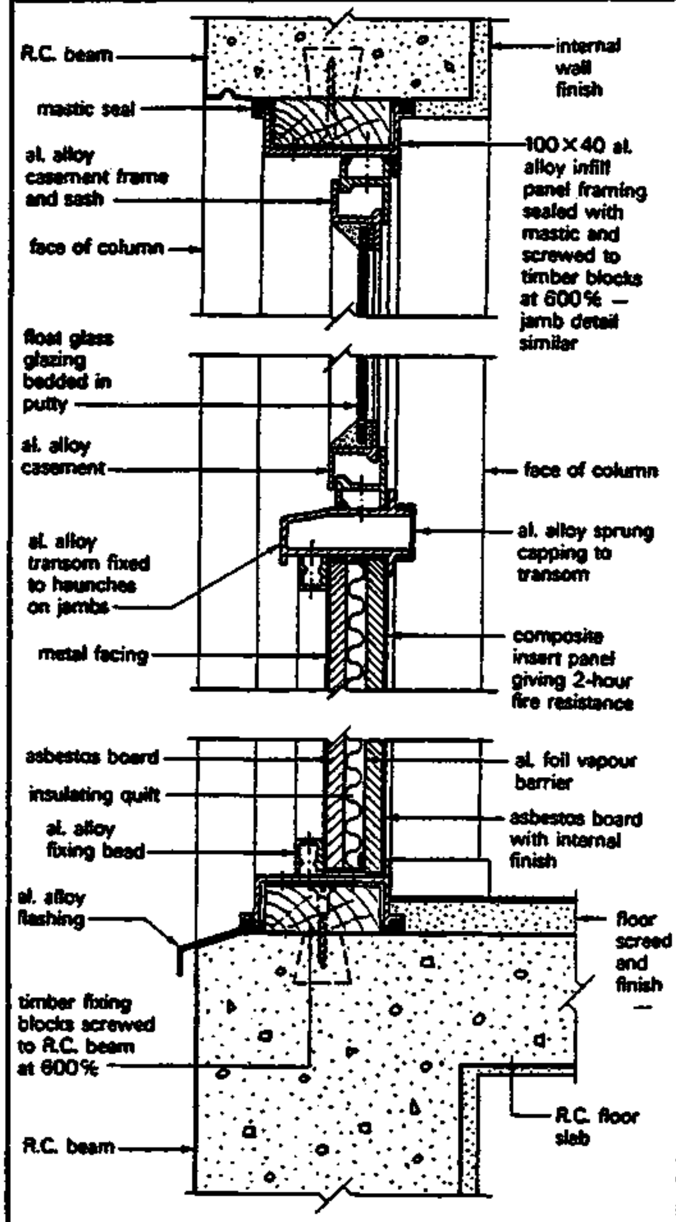

Typical metal infill panel details

LIGHTWEIGHT WALL CLADDING

- LIGHTWEIGHT WALL CLADDINGS

In common with other cladding methods for framed buildings, lightweight wall claddings do not require high compressive strength since they only have to support their own dead load and any imposed wind loading, which will become more critical as the height and/or exposure increases. Lightweight claddings are usually manufactured from impervious materials which means that the run off of rain water can be high particularly under storm conditions when the discharge per minute could reach 2 litres per square metre of wall area exposed to the rain.
A wide variety of materials can be used as a cladding medium, most being profiled to a corrugated or trough form since the shaping will increase the strength of the material over its flat sheet form. Flat sheet materials are available but are rarely applied to large buildings because of the higher strength obtained from a profiled sheet of similar thickness. Special contoured sheets have been devised by many manufacturers to give the designer a wide range of choice in the context of aesthetic appeal. Claddings of various sandwich construction are also available to provide reasonable degrees of thermal insulation, sound insulation and to combat the condensation hazard which can occur with lightweight claddings of any nature.
The sheets are fixed in a similar manner to that for sheet roof coverings. The support purlins are replaced

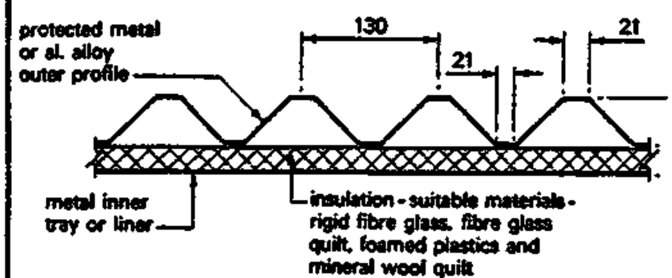

Typical cladding profile

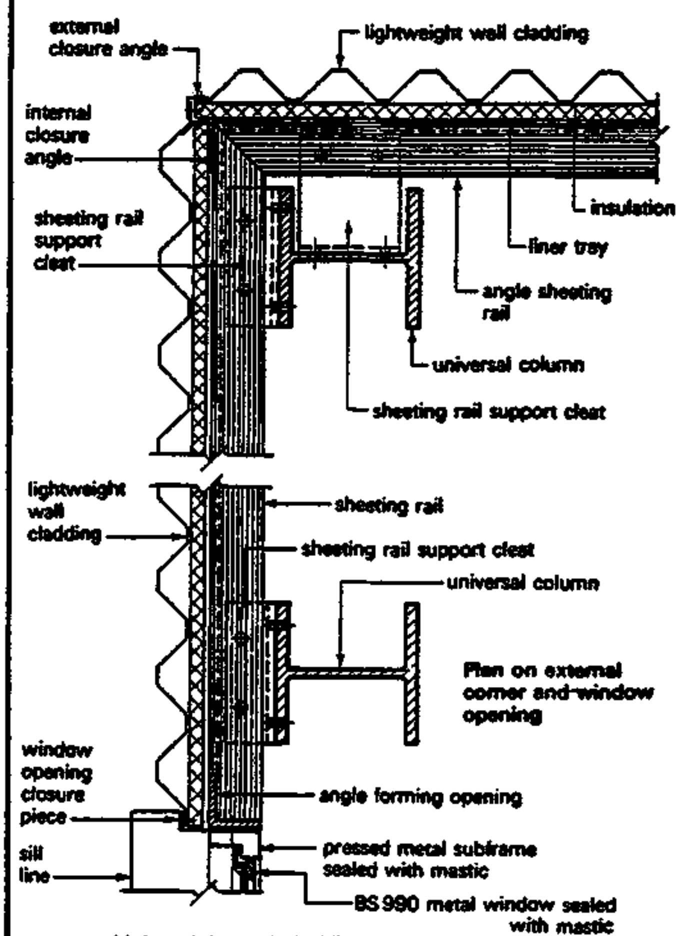

Lightweight wall cladding - typical details 1

LIGHTWEIGHT WALL CLADDING

in walls by a similar member called a sheeting rail which is fixed by cleats to the vertical structural frame members. The major difference occurs with the position of the fixings which in wall claddings are usually specified as being positioned in the trough of the profile as opposed to the crest when fixing roof coverings. This change in fixing detail is to ensure that the wall cladding is pulled tightly up to the sheeting rail or lining tray.

Plastic protective caps for the heads of fixings are available, generally of a colour and texture which will blend with the wall cladding. A full range of fittings and trims are usually obtainable for most materials and profiles to accommodate openings, returns, top edge and bottom edge closing. Typical cladding details are shown in the fig.
Common materials used for lightweight wall claddings are:

1 Asbestos cement
non-combustible material in corrugated and troughed sheets which are generally satisfactory when exposed to the weather but are susceptible to impact damage. Average life is about 20 years which can be increased considerably by paint protection. Unpainted sheets loose their surface finish at the exposed surface by carbonation and become ingrained with dirt. To achieve reasonable thermal insulation standards a lining material will be required, which is normally sandwiched between the cladding and an inner lining tray.

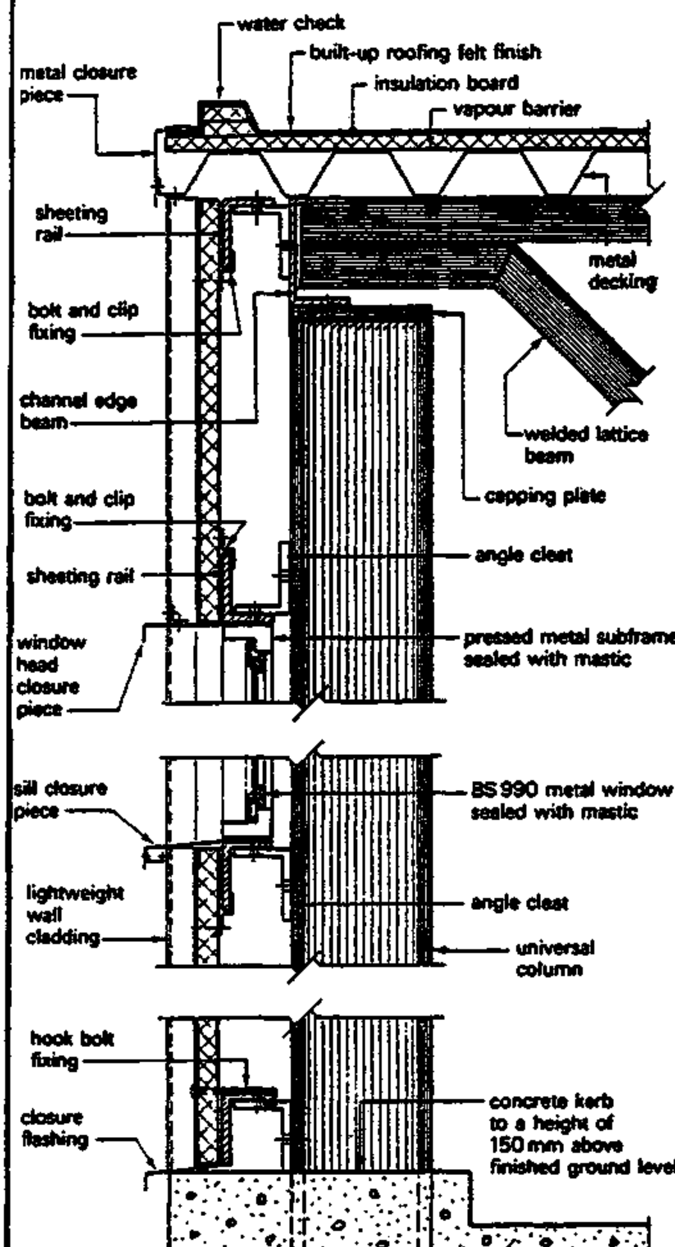

Lightweight wall cladding - typical details 2

LIGHTWEIGHT WALL CLADDING

2 Coated steel sheets non-combustible material with a wide range of profiles produced by various manufacturers. The steel sheet forms the core of the cladding providing its strength and this is covered with various forms of coatings to give weather protection, texture and colour. A typical specification would be a galvanised steel sheet core covered on both sides with a layer of asbestos felt to increase resistance to fire, a layer of bitumen-impregnated felt to act as a barrier to the passage of moisture to the core and on the face surface a coloured and textured coating of plastic. Fixing and the availability of fittings is as described above for asbestos cement.

3 Aluminium alloy sheets non-combustible material in corrugated and troughed profiles which are usually made to the recommendations of BS 2858 and BS 3428 respectively. Other profiles are also available as manufacturers' standards. Durability will depend upon the alloy used but this can be increased by paint applications; if unpainted, regular cleaning may be necessary if its natural bright appearance is to be maintained. Fixing, fittings and the availability of linings is as given for other cladding materials.

4 Polyvinyl chloride sheets generally supplied in a corrugated profile with an embedded wire reinforcement to provide a cladding with a surface spread of flame classification of class 1 in accordance with BS 476: Part7.

The durability of this form of cladding is somewhat lower than those previously considered and the colours available are limited. The usual range of fittings and trims are available.

The importance of adequate design, detail and fixing of all forms of lightweight cladding cannot be overstressed since the primary objective of these claddings is to provide a lightweight envelope to the building giving basic weather protection and internal comfort at a reasonable cost. Claddings which will fulfil these objectives are very susceptible to wind damage unless properly secured to the structural frame.

CURTAIN WALLING

- CURTAIN WALLING

Curtain walls are a form of external lightweight cladding, attached to a framed structure or monolithic walls, forming a complete envelope or sheath around the structural frame.

They are non-load-bearing claddings, which have to support only their own deadweight and any imposed wind loadings which are transferred to the structural frame through connectors which are usually positioned at the floor level.

The basic conception of most curtain walls is a series of <u>vertical</u> MULLIONS spanning from floor to floor interconnected by <u>horizontal</u> TRANSOM S forming openings into which can be fixed panels of glass or infill panels of opaque materials like:
- metal faced insulation materials
- weatherproof blockboard
- plastic materials, etc.

of various thickness built in metal frames.

Most curtain walls are constructed by using a patent or proprietary system produced by metal window manufacturers.

The primary objectives of using curtain walling systems are:

1 Provide an enclosure to the structure which will give the necessary protection against the elements.

2 Make use of dry construction methods.

3 Impose onto the structural frame the minimum load in the form of claddings.

4 Exploit an architectural feature.

To fulfil its primary functions a curtain wall must meet the following requirements:

1 Resistance to the elements the materials used in curtain walls are usually impervious and in themselves present no problem but by virtue of the way in which they are fabricated a large number of joints occur. These joints must be made as impervious

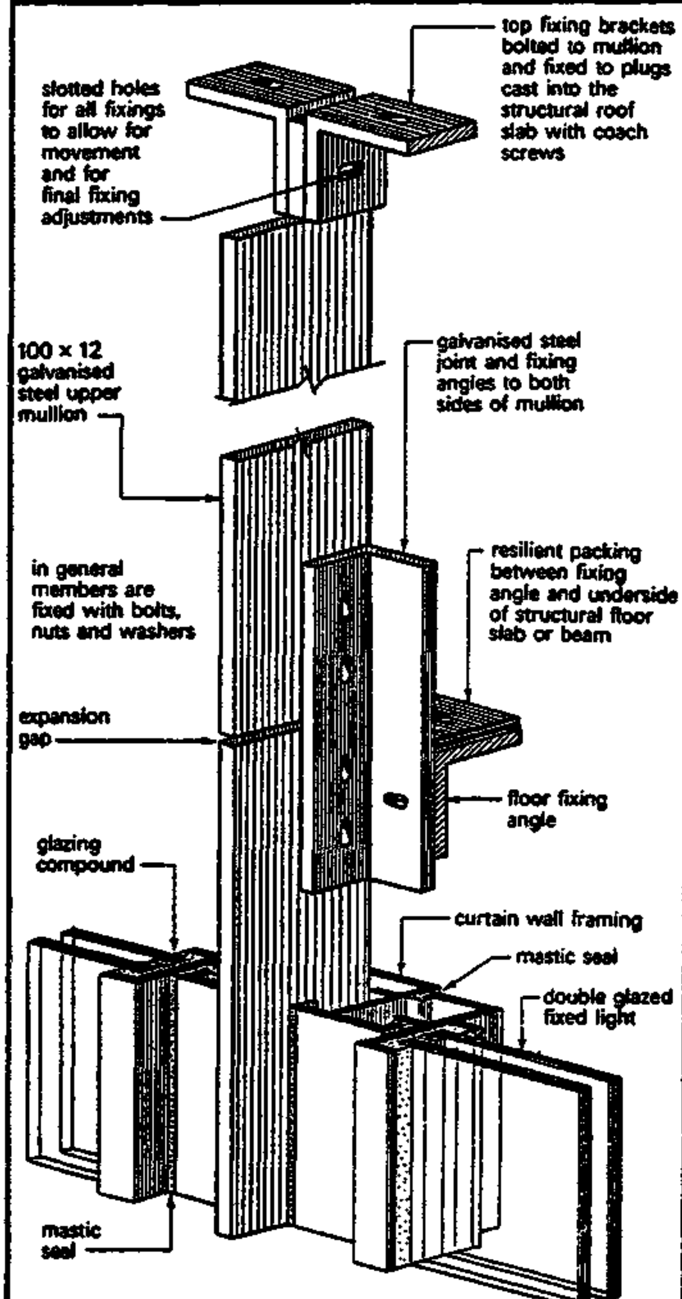

Typical curtain walling details 1

as the surrounding materials or designed as a drained joint. The jointing materials must also allow for any local thermal, structural or moisture movement and generally consist of mastics, sealants and/or preformed gaskets of synthetic rubber or PVC.

2 Assist in maintaining the designed internal temperatures - since curtain walls usually include a large percentage of glass the overall resistance to the transfer of heat is low and therefore preventive measures may have to be incorporated into the design. Another problem with large glazed areas is solar heat gain since glass will allow the short wave radiations from the sun to pass through and consequently warm up the surfaces of internal walls, equipment and furniture. These surfaces will in turn radiate this acquired heat in the form of long wave radiations which cannot pass back through the glazing thus creating an internal heat build-up. Louvres fixed within a curtain walling system will have little effect upon this heat build-up but they will reduce solar glare. A system of non-transparent external louvres will slightly reduce the heat gain by absorbing heat and radiating it back to the external air. The usual methods employed to solve the problem of internal heat gain are:

a Deep recessed windows which could be used in conjunction with external vertical fins.

b Balanced internal heating and ventilation systems

c Use of special solar control glass such as reflective glasses which during manufacture are modified by depositing on the surface of the glass a metallic or dielectric reflective layer. The efficiency of this form of glazing can be increased if the glass is tilted by 5° to 15° to increase the angle of incidence.

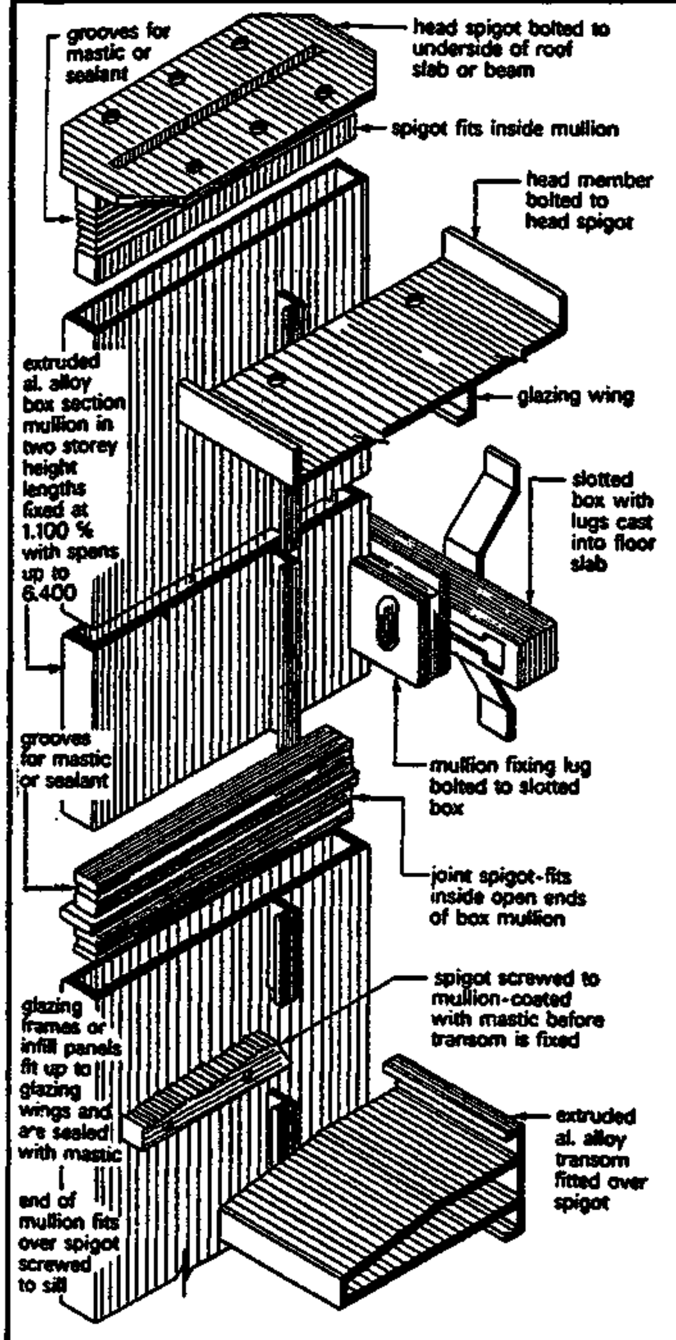

Typical curtain walling details 2

damage of the glazed and infill panel areas by enabling these units to move independently of the curtain wall framing.

4 Provide required degree of fire resistance - this is probably one of the greatest restrictions encountered when using curtain walling techniques because of the large proportion of unprotected areas as defined in Building Regulation E 1 and by the conditions set out in Building Regulation E 7 and Schedule 9. By using suitable materials or combinations of materials the opaque infill panels can normally achieve the required fire resistance to enable them to be classified as protected areas.

5 Easy to assemble and fix - the principal member of a curtain walling system is usually the mullion which can be a solid or box section which is fixed to the structural frame at floor levels by means of adjustable anchorages or connectors.

3 Adequate strength - although curtain walls are classified as non-load-bearing they must be able to carry their own weight and resist both positive and negative wind loadings. The magnitude of this latter loading will depend upon three basic factors:

a Height of building
b Degree of exposure
c Location of building

The strength of curtain walling relies mainly upon the stiffness of the vertical component or mullion together with its anchorage or fixing to the structural frame. Glazing beads and the use of compressible materials also add to the resistance of possible wind

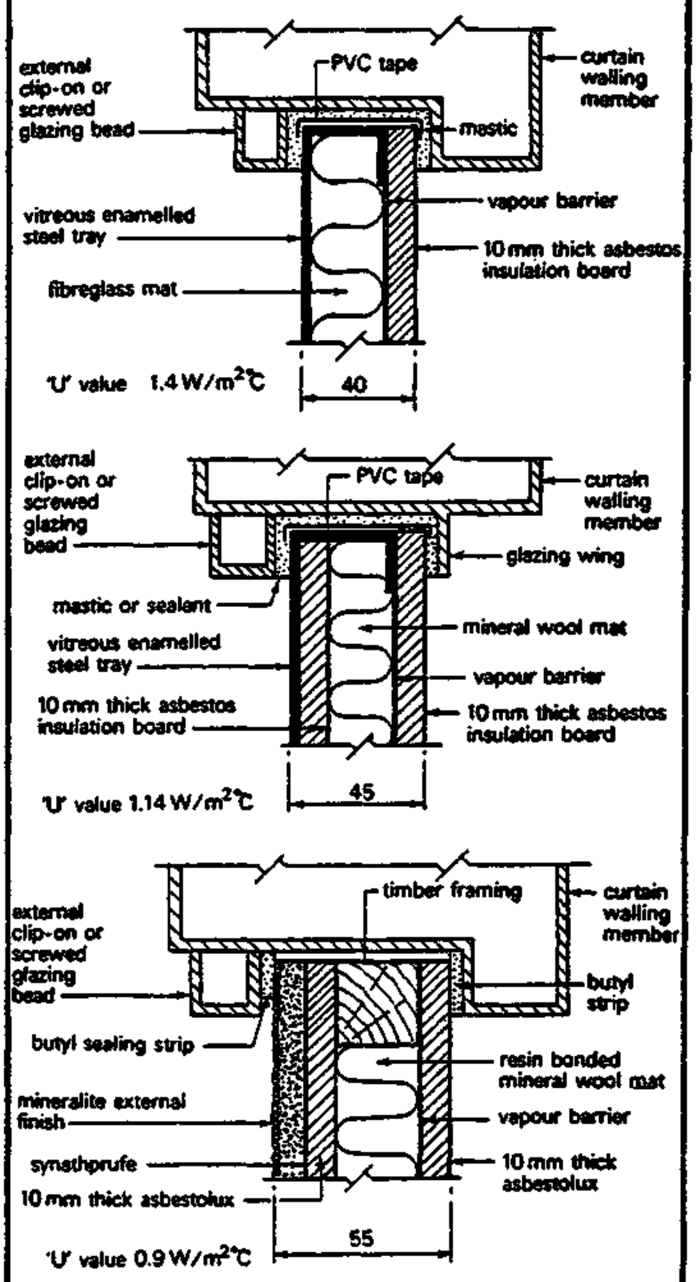

Typical curtain walling infill panel details

CURTAIN WALLING

The infill framing and panels may be obtained as a series of individual components or as a single prefabricated unit. The main problems are ease of handling, amount of site assembly required and mode of access to the fixing position.

6 Provide required degree of sound insulation - sound originating from within the structure may be transmitted vertically through the curtain walling members. The chief source of this form of structure-borne sound is machinery and this may be reduced by isolating the offending machines by mounting them on resilient pads and/or using resilient connectors in the joints between mullion lengths.

Airborne sound can be troublesome with curtain walling systems since the lightweight cladding has little mass to offer in the form of a sound barrier, the weakest point being the glazed areas. A reduction in the amount of sound transmitted can be achieved by

a Reducing the areas of glazing
b Using sealed windows of increased glass thickness
c Double glazing in the form of inner and outer panes of glass with an air space of 150 to 200 mm between them.

7 Provide for thermal and structural movements - since curtain walling is situated on an external face of the structure it will be more exposed than the structural frame and will therefore be subject to greater amounts of temperature change resulting in high thermal movement. The main frame may also be subjected to greater settlement than the claddings attached to its outer face. These differential movements mean that the curtain walling systems should be so designed, fabricated and fixed that the attached cladding can move independently of the structure. The usual methods of providing for this required movement are to have slotted bolt connections and, to allow for movement within the curtain walling itself, to have spigot connections and/or mastic sealed joints.

EXTERNAL PAINTS and FINISHES

12.1.4 EXTERNAL PAINTS AND FINISHES

The usual colour renderings today are achieved either by use of cement paints, i.e. paints containing coloured cements supplied as powder and mixed with water, or by use of PVA emulsion paints. The former are very popular, especially with Tyrolean finish. The latter are supplied as a thick liquid to which water is added. They are easily applied, require no special skill and form a plastic skin which adheres well to cement rendering. Emulsion paint, however, does fail occasionally because of the alkaline nature of the background. The emulsion paint used must be of external quality.

Oil paints are not greatly used in the tropics on the grounds of their expense, and emulsion paint cannot be applied over them.

Water-bound distemper is still used, as it is cheap and easily applied. It needs frequent renewal.

An expensive but strong and durable surface can be obtained from the use of epoxy resin paint. It is waterproof and adheres well. It is very good for cement screeded floors

Bitumen paints are good, particularly in coastal areas or in damp atmospheres. They are used widely on corrugated iron sheeting and other metals in need of protection from rust. The surfaces must be cleaned before paint is applied. No other kind of paint can be applied over bitumen paint.

Woodwork which is mainly from hardwood does not always receive the preparative treatment which is usual in the case of softwood. Frequently it is not primed. Hardwoods, however, are sometimes subject to rapid decay in external conditions and should be carefully primed before undercoat is applied.

Varnishing of wood used externally although still popular is not always successful on exposed faces. It is quite satisfactory in sheltered areas, under canopies, walkways, etc. but will not stand up to sunlight.

12.2 INTERNAL WALL FINISHES

12.2.1 PLASTERING

A number of factors causes a great variation in the art of plastering from one country to another:
- traditional customs
- religious influences
- the material available
- the tools used
- the background to which it is applied.

Therefore only the main plastering techniques will be dealt with here.

. MATERIALS

The chief materials used for plastering are:
- lime
- cement
- gypsum and
- sand.

LIME

LIME

Lime for plastering is produced by calcining (burning) limestone, mainly chalk, which removes the carbon dioxide. On cooling, the quicklime is stored in a dry place from where it is transported to its destination. Before it can be used, however, the lime must be 'slaked', i.e. water added a week or two before it is needed. Lime for plastering is usually 'fat' lime, i.e. easily slaked and workable as distinct from hydraulic lime which is not, but which has the property of setting under water. Locally burnt lime produced under primitive conditions is rarely of good quality and results in pitting or blowing of the rendering caused by uneven burning.

Modern lime production can be carried out on similar lines to the manufacture of Portland cement. Quicklime is exposed to steam which reduces the lime to a powder. This is bagged for transport in the same way as Portland cement although it is only about half its weight. The lime is usually soaked on site for a short while, say a day, after which it is ready for use.

CEMENT

PORTLAND CEMENT

Where a country has no supply of its own, cement may be imported in 1 cwt (50kg) bags or drums, as explained. There appears to be no reason, however, why the clinker produced by burning, when cooled off, should not be shipped to its destination where it would then be ground into cement. This method would have a number of advantages: it would be cheaper to transport in bulk; it could be freshly ground as required and the clinker would be unaffected by moisture which is an important consideration in humid areas. The grinding process could be incorporated into the full production plant for manufacturing cement when or if it was eventually built.

BUILDING PLASTERS

BUILDING PLASTERS

The bulk of these have a gypsum base, gypsum being a naturally occurring material found in many parts of the world. There are many varieties which, under the BS system are divided into classes.

The main divisions are:

Class A plaster:
This is usually called plaster of Paris. To produce it, gypsum is burnt to a fairly low temperature (160°C) when it loses most of its water of hydration. When the finished plaster is mixed with water, it sets very quickly, within 5 minutes usually. Plaster of Paris is used extensively in plaster casting shops. Here prefabricated panels and mouldings are prepared, reinforced by wood laths and hessian scrim. These are transported to the site and nailed or screwed to wood grounds or bearers which are shaped if necessary. The joints are then neatly filled with gauged plaster. Much fine plaster work is carried out in this way.

Class B plasters.
These are plasters in which the 'set' has been retarded, or the setting time increased. This allows the plasterers time to lay on the material and bring it to a smooth finish. There are three grades of Class B plasters, usually, undercoat, finishing and 'dual purpose', the latter being most widely used, particularly when it has to be imported.

Class C plasters.
These are normally of better quality than those of Class B. They are made by heating gypsum to a higher temperature than 160°C. This causes the plaster to lose its quick-setting power. Accelerators are then added which cause the material to set in enough time to allow the plasterer to obtain a smooth finish.

Class D plasters.
The main plaster in this group is Keene's cement, a high-quality slow-setting plaster giving a smooth marble-like finish. Adhesion of decorative finish on Keene's or Parian cement is very poor unless a coat of sharp oil paint is applied as soon as it has set.

Other types.
Class B,C and D plasters should be applied to backgrounds as undercoats and/or finishes in accordance with the recommendation given in Mixes. Other types of plasters, however, are available which may be applied to any surface including concrete, blockwork or plasterboard. Lightweight plasters are also available with improved acoustical and insulating properties. For further information on these, the reader is referred to M.O.P. B.W. Advisory leaflets, B.R.S. publications, etc.

MIXES

Mixes.
For internal work Cement and Sand is only used, where lime is not available or where a building is designed on an open plan. In most areas in Tanzania all internal renderings are of Portland cement and sand, no other material is used even for the finish coat. This practice is costly in cement and does not provide for a smooth finish, particularly when application and finishing are done with only the aid of a mason's trowal and a straight - edge.

LIME may be added to either Portland cement or gypsum plaster, but Portland Cement must NOT be mixed with gypsum plaster.
Usually Portland cement/lime/sand is reserved for external work and gypsum plasters for internal, although there are many exceptions to this practice.
Gypsum plasters are also used externally in areas of low rainfall and humidity.
The most common mixes are given in the table below.

Background	*Undercoat*	*Finish*
Brickwork or blockwork	(1) Cement/lime/sand 1:2:6	Lime/gypsum Class B 1:¼ (*R*)
	(2) Cement/sand 1:4	Gypsum C neat (*S*)
	(3) Gypsum B/sand 1:3	Lime/gypsum B 1:¼ (*T*)
	(4) Gypsum C/lime/sand 2:1:6	*R*, *S*, or *T* above
Concrete cast *in situ*	As (2) above	As *S* above
	As (3) above	As *T* above
	If none needed	As *S* above
Metal lathing	As (1) above (two coats)	As *R* above
	As (3) above (two coats)	As *T* above
Expanded plastic sheets, plasterboard or fibreboard	None usual (except joints)	As *R* above
Wood-wool slabs	As (1) above	As *R* above
	As (3) above	As *T* above

KEY

FINISHING COAT

Key.
Adhesion of plaster to the background is very important. Concrete should be cleaned free of grease of film and either 'hacked' or painted with an epoxide resin adhesive.
Each coat of plaster should be scratched or grooved the top undercoat only lightly so.

Finishing Coat.
This should not be applied too quickly. One coat 1,5mm to 3 mm is usually sufficient. Undercoat thicknesses vary but 10 to 15 mm is usual.

OTHER INTENAL WALL FINISHES

12.2.2 Other Internal Wall Finishes

There is a wide range of finishes available today and new materials are constantly being introduced. Fashion, ideas, prefabrication, cost and the economic state of the community all effect demand.
Only the basic finishes, therefore, may be listed up to give an idea about the variety of different materials used as internal wall finishes:

- Glazed Tiles
- Decorative Patterned Tiles
- Ceramic Mosaics
- Marble
- Terrazzo
- Mosaic
- PVC Tiles
- Glass,
  i.e. plate glass (coloured)
  glass panels
  patterned glass
  glass blocks
- Dry Lining Techniques etc.

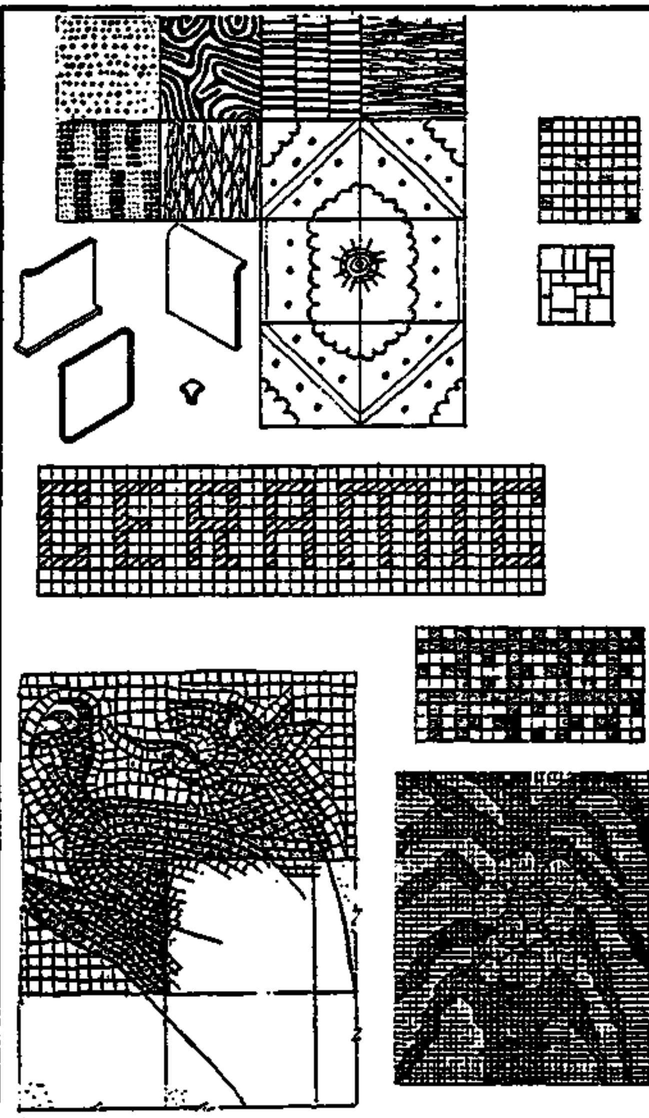

PAINTING

12.2.3 Painting

Protection and decoration are the two important functions of painting.
On interior work, particularly walls and ceilings, the decorative function may be considered more important even though walls may have to withstand washing.

PAINT is a mixture of a liquid or medium and a colouring or pigment. Mediums used in paint manufacture range from thin liquids to stiff jellies and can be composed of linseed oil, drying oils, synthetic resins and water. The various combinations of these materials forms the tape of class of paint. The medium's function is to provide the means of spreading and binding the pigment over the surface to be painted. The pigment provides the body, colour and durability of the paint. White lead is a pigment which gives good durability and moisture resistance but it is poisonous, therefore its use is confined mainly to priming and undercoating paints. Paints containing a lead pigment are required by law to state this fact on the can. The general pigment used for finishing paint is titanium dioxide which gives good obliteration of the undercoating but is not poisonous.

OIL BASED PAINTS

Priming paints:
These are first coat paints used to seal the surface, protect the surface against damp air, act as a barrier to prevent any chemical action between the surface and the finishing coats and to give a smooth surface for the subsequent coats. Priming paints are produced for application to wood, metal and plastered surfaces.

Undercoating paints:
These are used to build up the protective coating and to provide the correct surface for the finishing coat(s). Undercoat paints contain a greater percentage of pigment than finishing paints and as a result have a matt or flat finish. To obtain a good finishing colour it is essential to use an undercoat of the type and colour recommended by the manufacturer.

Finishing paints:
A wide range of colours and finishes including matt, semi-matt, eggshell, satin, gloss and enamel are available. These paints usually contain a synthetic resin which enables them to be easily applied, quick drying and have good adhesive properties. Gloss paints have less pigment than the matt finishes and consequently less obliterating power.

POLYURETHANE PAINTS.
These are quick drying paints based on polyurethane resins giving a hard heat resisting surface. They can be used on timber surfaces as a primer and undercoat but metal surfaces will require a base coat of metal primer, the matt finish with its higher pigment content is best for this 'one paint for all coats' treatment. Other finishes available are gloss and eggshell.

PAINTING

WATER BASED PAINTS.
Most of the water based paints in general use come under a general classification of emulsion paints: they are quick drying and can be obtained in matt, eggshell, semi-gloss and gloss finishes. The water medium has additives such as polyvinyl acetate and alkyd resin to produce the various finishes. Except for application to iron work, which must be primed with a metal primer, emulsion paints can be used for priming, undercoating and as a finishing application. Their general use is for large flat areas such as ceilings and walls.

VARNISHES AND STAINS
Varnishes form a clear, glossy or matt, tough film over a surface and are a solution of resin and oil. their application being similar to oil based paints.

The type of resin used, together with the correct ratio of oil content, forms the various durabilities and finishes available. Stains can be used to colour or tone the surface of timber before applying a clear of varnish; they are basically a dye in a spirit and are therefore quick drying.

CEILING FINISHES 12.3

12.3 CEILING FINISHES

Ceilings can be finished by any of the dry lining techniques previously described for walls. The usual method is a plasterboard base with a skim coat of plaster. The plasterboards are secured to the underside of the floor or ceiling joists with galvanised plasterboard nails to reduce the risk of corrosion to the fixings. If square edged plasterboards are used as the base a jute scrim over the joints is essential. The most vulnerable point in a ceiling to cracking is at the junction between the ceiling and wall, this junction should be strengthened with a jute scrim around the internal angle (see fig.) or alternatively the junction can be masked with a decorative plasterboard or polystyrene cove moulding.

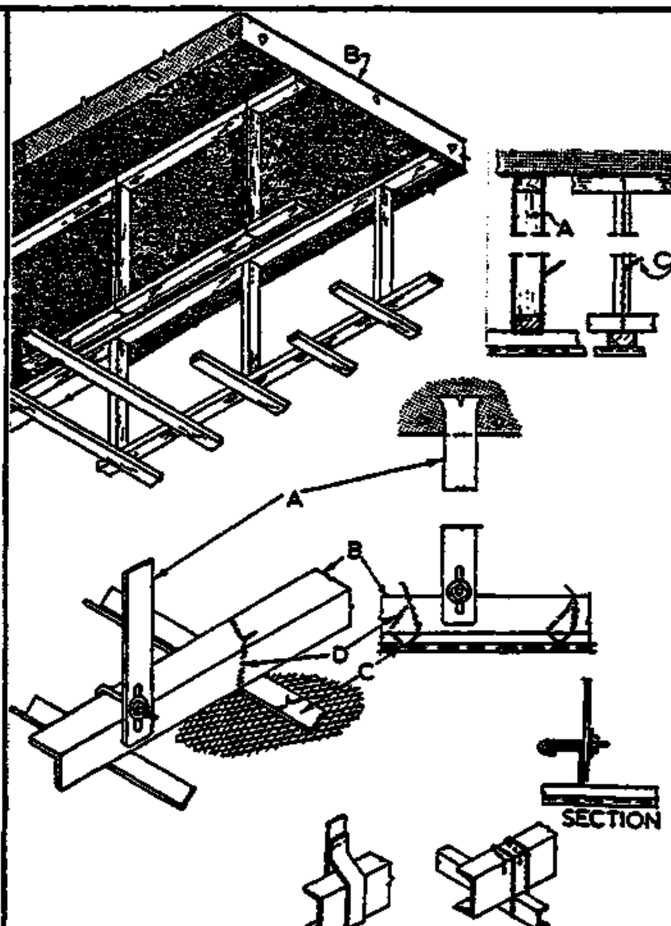

CEILING FINISHES

The cove moulding is made in a similar manner to plasterboard and is intended for direct decoration. Plasterboard cove moulding is jointed at internal and external angles with a mitred joint and with a butt joint in the running length. Any clean, dry and rigid background is suitable for the attachment of plasterboard cove which can be fixed in one of two ways. It can be secured by using a special water mixed adhesive applied to the contact edges of the moulding which is pressed into position; any surplus adhesive should be removed from the edges before it sets. Alternatively the cove moulding can be fixed with galvanised steel or brass screws to plugs or battens - fixings to the wall are spaced at 300 mm centres and to the ceiling at 600 mm centres. A typical plasterboard cove detail is shown in the fig. Many forms of ceiling tiles are available for application to a joisted ceiling or solid ceiling with a sheet or solid background. Fixing to joists should be by concealed or secret nailing through the tongued and grooved joint. If the background is solid such as a concrete slab then dabs of a recommended adhesive are used to secure the tiles. Materials available include expanded polystyrene, mineral fibre, fibreboard and glass fibre with a rigid vinyl face. Other forms of finish which may be applied to ceilings are sprayed plasters which can be of a thick or thin coat variety. Spray plasters are usually of a proprietary mixture applied by spraying apparatus directly on to the soffit giving a coarse texture which can be trowelled smooth if required. Various patterned ceiling papers are produced to give a textured finish. These papers are applied directly to the soffit or over a stout lining paper. Some ceiling papers are designed to be a self finish but others require one or more coats of emulsion paint.

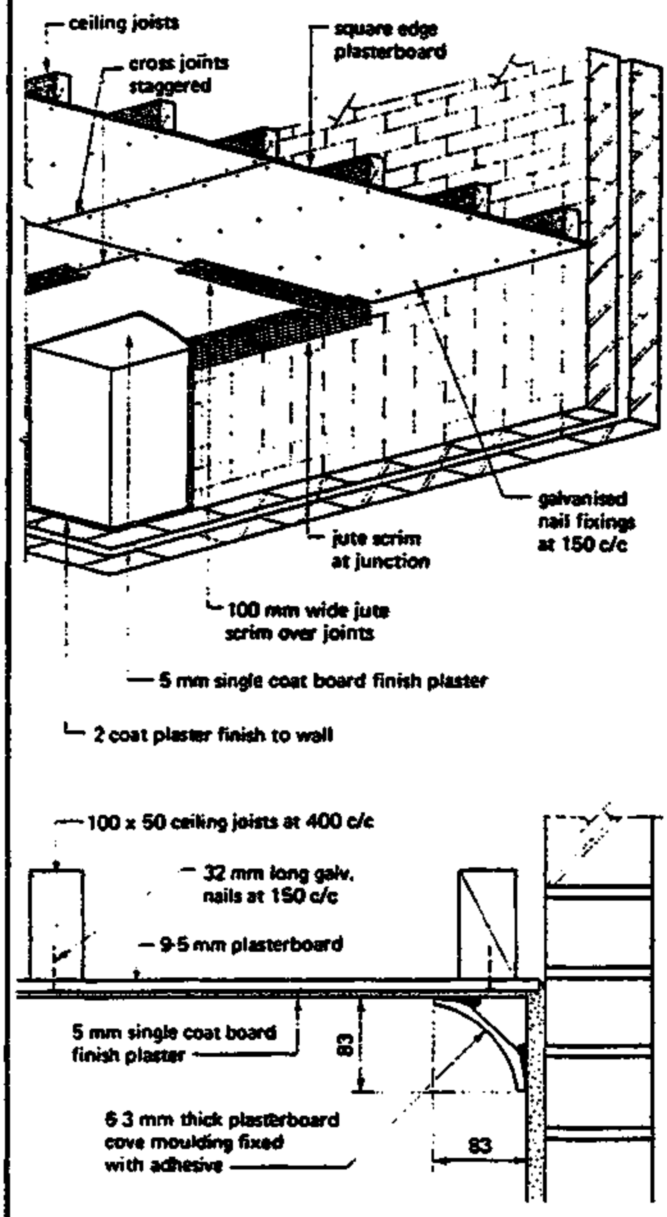

Plasterboard ceilings

●REPETITION●● exercises ●●REPETITION●

Try to answer the following questions and practice sketching where ever necessary and possible

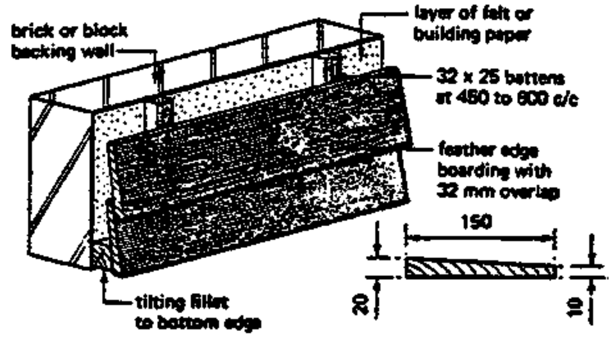

12.1. External Wall Finishes

- Define the terms: External Rendering
  Spatterdash
  Roughcast
  Pebbledash
  Tyrolean Finish
- What are the properties of the rendering and where does the success of the rendering depend on?
- Give the two common volume mix ratios!
- Write notes on the application of external rendering.
- List and describe methods of finishing concrete walls apart from rendering or painting.
- What are the advantages of cladding over traditional types of construction?
- Which points must a designer keep in mind to prevent failures?
- Which points must a cladding fixer keep in mind?
- Where should cramps and other fixings be made from?
- Write notes on claddings fixed to a structural backing, including Tile Hanging and Timber Claddings. Use sketches for illustration!
- Write notes on claddings to framed structures, including Brick Panel Walls, Concrete Cladding Panels, Infill Panels, Lightweight Wall Claddings and Curtain Walling. Use sketches for illustration.
- Compare the different types of external paints and finishes!

● REPETITION ●● exercises ●● REPETITION ●

12.2 Internal Wall Finishes

- List and describe the different materials used for plastering!
- Write notes on Mixes for internal work and give the most common Mixes.
- Describe the important factors of a good key and the finishing coat for plaster
- List other Internal Wall Finishes
- What are the important functions of painting
- Define the terms: Priming Paints
  Undercoating Paints
  Finishing Paints
  Polyurethane Paints
  Water Based Paints
  Varnishes and Stains

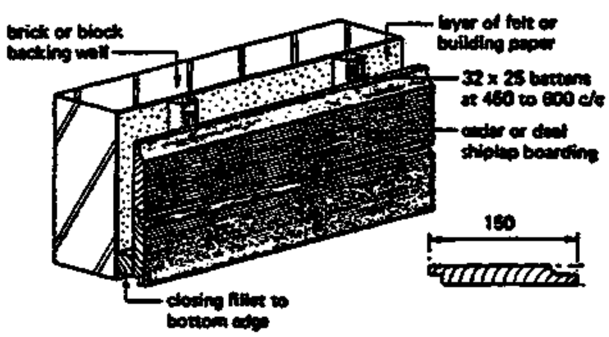

Typical horizontal claddings

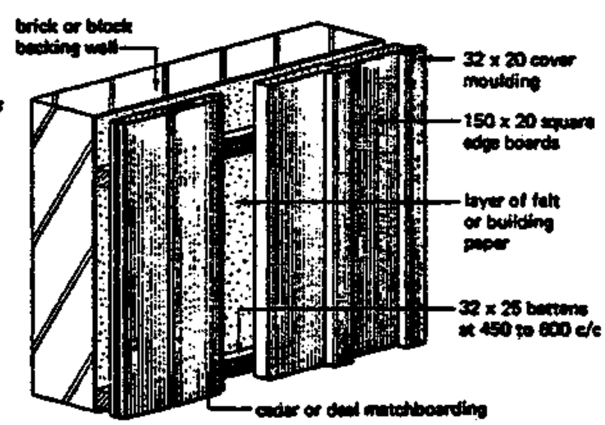

Typical vertical cladding

12.3 Ceiling Finishes

- Write notes on ceiling finishes and use sketches for illustration.

13. STAIRS

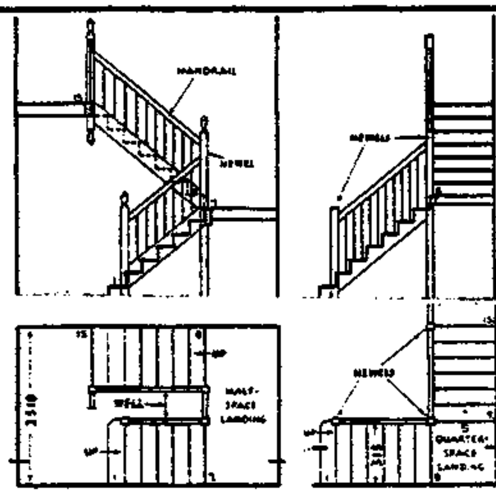

CONTENTS :

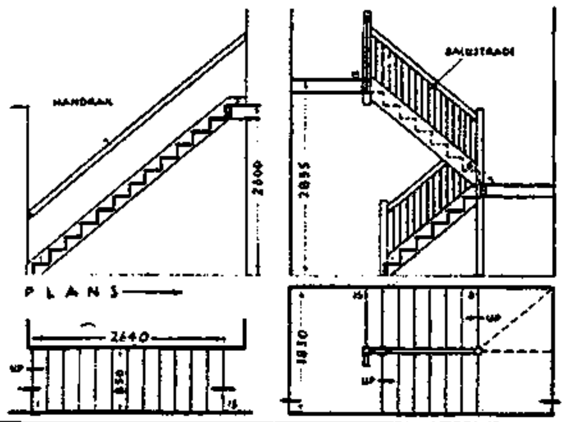

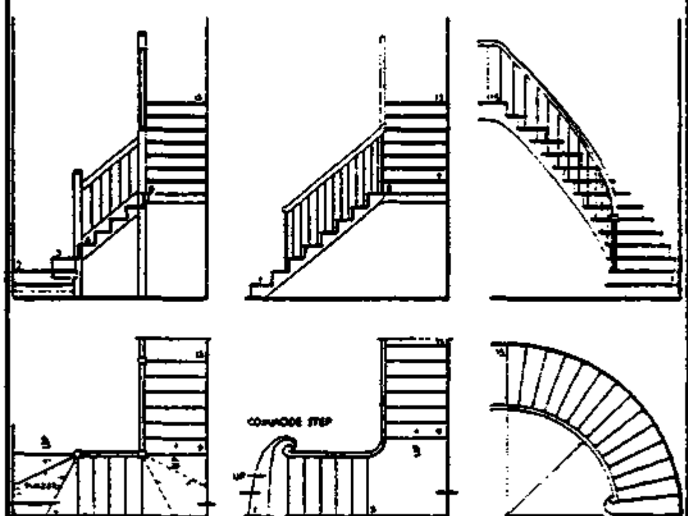

REFERENCES :

1. Jack Stroud Foster
   MITCHELL'S BUILDING CONSTRUCTION 'Structure and Fabric'
   Part 1,2

2. R. Chudley
   'Construction technology'
   Vol. 2,3

3. Mc. Kay
   'Building Construction 'Metric'
   Vol. 1,3

4. R.L. Fullerton
   'Building Construction in Warm Climates'
   Vol. 2,3

5. R. Barry
   'The Construction of Buildings'

6. Brian Bonghton
   'Reinforced Concrete Detailer's Manual'

7. E. Neuffert
   'Architect's Data'

13. STAIRS

13.1 INTRODUCTION

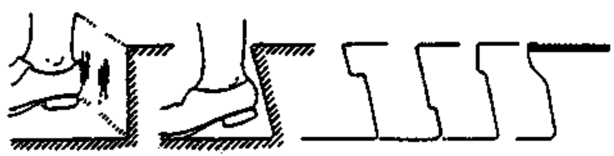

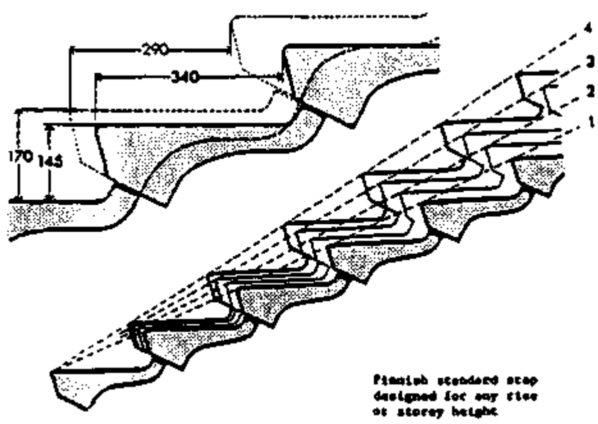

Finnish standard step designed for any size of storey height

For each 1 mm increase in height of step the tread is reduced by 2 mm as follows:

h	145	146	147	148	149	150	151	152	153	154	155	156	157
b	340	338	336	334	332	330	328	326	324	322	320	318	316
h	158	159	160	161	162	163	164	165	146	167	168	169	170
b	314	312	310	306	306	304	302	300	298	296	294	292	290

13. <u>STAIRS</u>

13.1 <u>Introduction</u>

- A STAIR is a number of at least 3 STEPS leading from one level to another, in order to provide means of movement between different levels <u>in</u> and <u>attached</u> to buildings and for predestrian walkways.
- To make STAIRS usable without danger, they have to be designed and constructed carefully:
  - . The type of STAIRS has to be choosen
  - . All measurements have to be calculated
  - . - if necessary - the tapering of the steps has to be designed. etc.
- For the construction of STAIRS different suitable materials can be used, such as
  - . Stone (both natural and artificial)
  - . Concrete
  - . Timber
  - . Steel
- Often you may find different materials combined at the same STAIR (i.e. Steel and Timber or reinforced concrete and Steel)
- The BALLUSTRADE is a part of the STAIR, which is installed for the purpose of SAFETY of the STAIR. Beside that, ballustrades may help to beautify the stair case.

TCA TECHNICAL COLLEGE ARUSHA
CHUO CHA UFUNDI ARUSHA
CIVIL ENGINEER. DEPARTMENT

13.2. Definition of Terms

13.2 DEFINITION OF TERMS

- STEP: is a short horizontal surface for the foot to ease ascent from one level to another.
  It consists of an horizontal element called TREAD and a vertical element called RISER.
  The external junction of the tread and riser, or the front edge of the tread (if projects beyond the face of the riser) is called NOSING.
  Special names are given to steps according to their shape on plan:
  - FLIERS are normal parallel steps, uniform in width and rectangular on plan.
  - TAPERED STEPS are steps of which the nosing is not parallel to that of the step above it. There are two forms of tapered steps:

  a) WINDERS - are tapered steps the back and the front edge of which radiate from the centre on a newel post.

  b) DANCING STEPS (or BALANCED STEPS) - are tapered steps the edges of which do not radiate from a common centre. They are built in a way that their narrow end is little narrower than the parallel tread of the straight part of the STAIRS. They are therefore more comfortable to walk on, than a WINDER, in which the nosing radiate from a common centre.

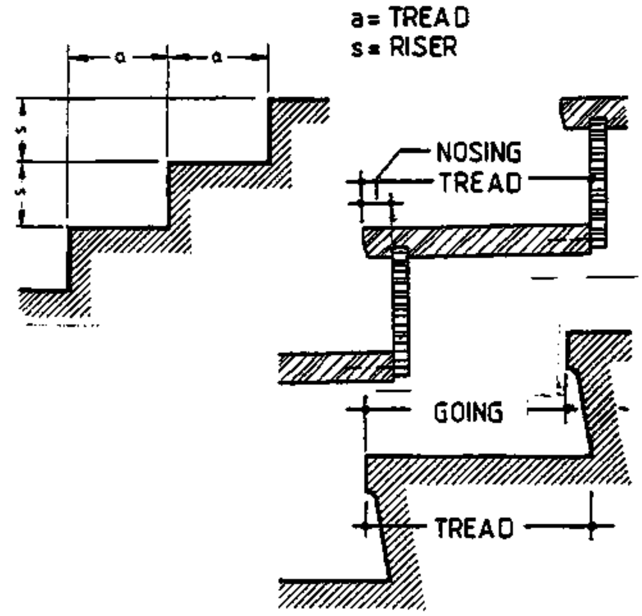

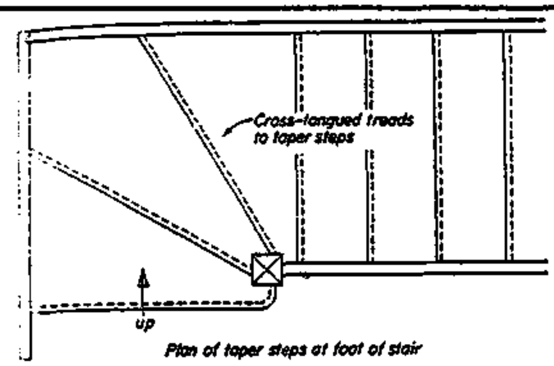

Plan of taper steps at foot of stair

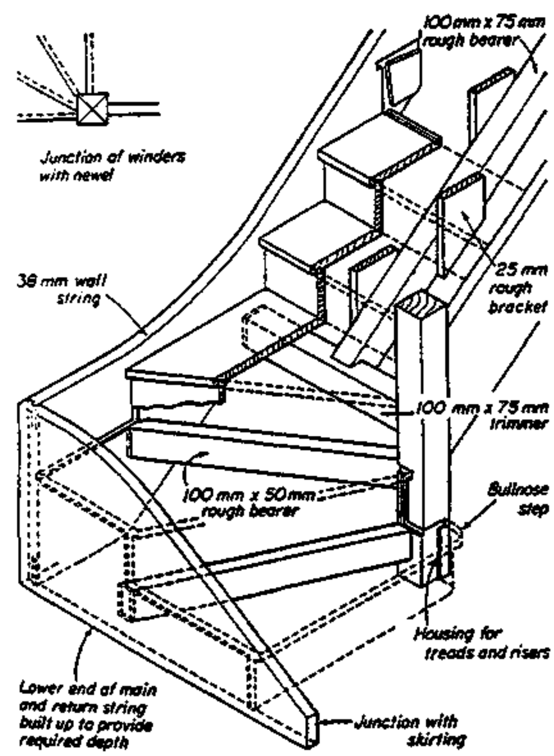

DEFINITION OF TERMS

- FLIGHT : A series of steps between FLOORS and LANDINGS.
- LANDING : A platform between two flights. A landing serves as a <u>rest</u> between flights and also as a means to turn a STAIR.
- . A HALF - SPACE-LANDING extends across the width of two flights and on it a <u>complete half turn</u> is made.
- . A QUARTER-SPACE-LANDING is one on which a <u>quarter turn</u> only is made from the end of one flight to the beginning of the next.
- RISE of a STEP is the vertical distance between the upper surface of 2 consecutive treads and the RISE of a FLIGHT is the total height between the floors or landings i t connects.
- RACKING RISER: A riser which is not vertical and overhangs the tread below, to give more foothold. The tread is bigger than its going.
- GOING (or RUN) of a step is the horizontal distance between the nosings or risers of 2 consecutive steps, and of a flight, the horizontal distance between the top and bottom nosings.
- LINE OF NOSINGS: Is an imaginary inclined line touching the nosings of a flight.
- PITCH or slope: The angle made between the line of nosings and the line of the floor or landing.

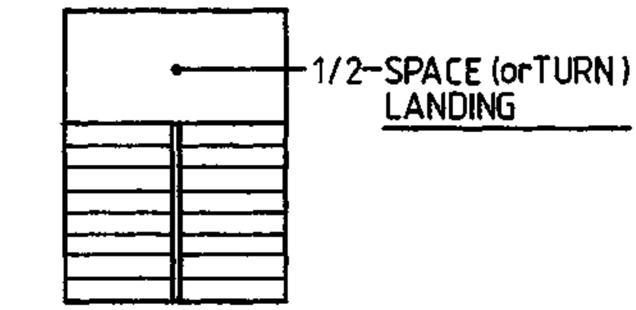

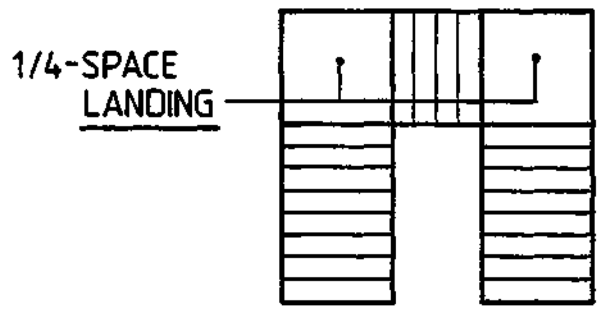

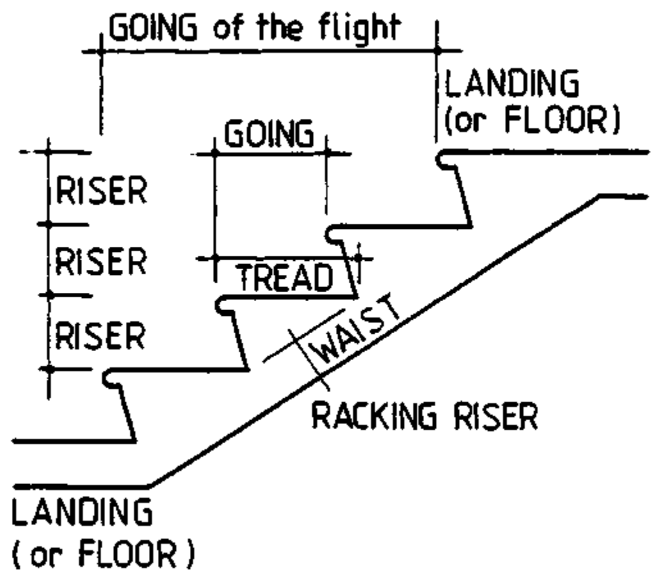

DEFINITION OF TERMS

- WALKING LINE: The average position taking up by a person ascending or descending the stair and generally taken to be 450 mm from the centre of the handrail.
- HEADROOM: The vertical distance between the line of nosings and any obstruction over the stair, usually the soffit of an upper flight or the lower edge of a floor or landing.
- BALUSTRADE: Provides protection on the open side or sides of a stair; it may be either solig or open. An open balustrade consists of vertical bars called BALUSTERS supporting and HANDRAIL.
- STRING or STRINGER: An inclined member which, if fixed to a wall, may act simply as a housing for the steps as in a timber steirs. If it is not feixed to a wall, it then acts as an inclined beam supporting the steps.
- STAIRCASE: This term is applied to a stair together with the part of the building, which encloses it, although it is also commonly used in reference only to the complete assembly of flights, landings and balustrades in a single stair.

WALKING LINE

If stairs are narrow or curved, distance of walk line from outer string is 350-400 mm (14-16 in)

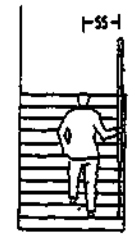

If stairs are wide and straight, distance of walk line from handrail is 550 mm (22 in)

HEADROOM

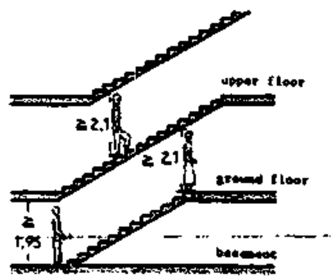

Stairs correctly placed above each other save space

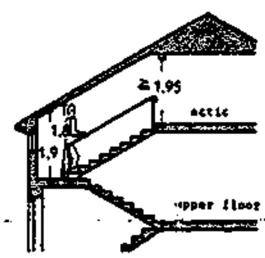

Rafters and joists running parallel to stair save space and costly trimmings

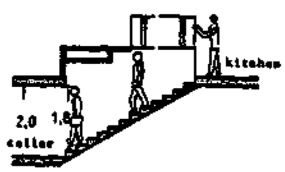

Avoid trap doors and necks to cellars, but combination shown is good and safe

HANDRAILS

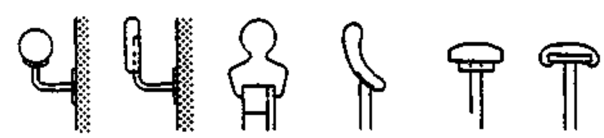

HANDRAIL PROFILES

HANDRAILS AT LANDINGS

13.3 TYPES OF STAIRS

13,3 - TYPES OF STAIRS

- The form of a stair depends on the size of the STAIRCASE. Also practical or aesthetical reasons might be taken in to consideration for the choice of the stair.
- Stairs are classified according to: the number of flights, the plan form, the kind of landings, and whether they are RIGHT - HAND or LEFT - HAND - STAIRS.

. According to the number of flights, stairs may be classified as:

a one-flight stairs
b two-flight stairs
c multi-flight stairs

a: one-flight stairs lead without landing from one floor-level to the other

b: two-flight-stairs consist of two flights and a landing in between.

c: in case the difference in level between two floors increases, more than two flights with landings in between might become necessary.
In multi-story buildings, two-or multi-flight stairs are common, in order to make ascent and descent more comfortable.

one-flight stairs

two-flight stairs

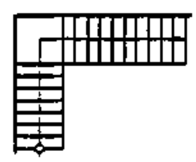

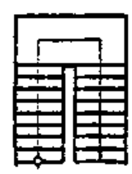

multi-flight stairs

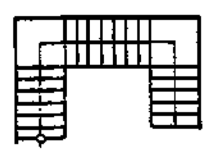

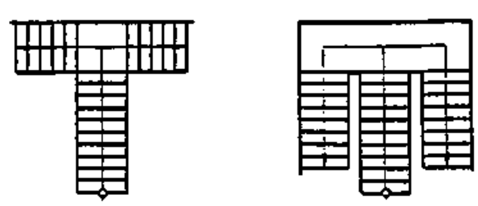

TYPES OF STAIRS

- According to the plan form stairs can be classified as:
  stairs with straight flights
  stairs with bent or circular (winding)flights
  stairs with straight and winding flights.

- According to the kind of landing stairs can be classified as:
  stairs with a half-space-landing and
  stairs with a quarter-space-landing (ref.13.2)

- The term RIGHT-Hand or LEFT-Hand-Stair depends on the open side of the stair:
  Ascending the stair, if you have to hold the handrail with your right hand, it is called a RIGHT HAND STAIR.
  In case of a LEFT HAND STAIR you will find the hand rail on your left hand side.
  Tapered or spiral Stairs are called RIGHT-HAND-STAIRS if the walking direction turns to the right (clockwise) from the straight. Left-hand-stairs turn to the left.

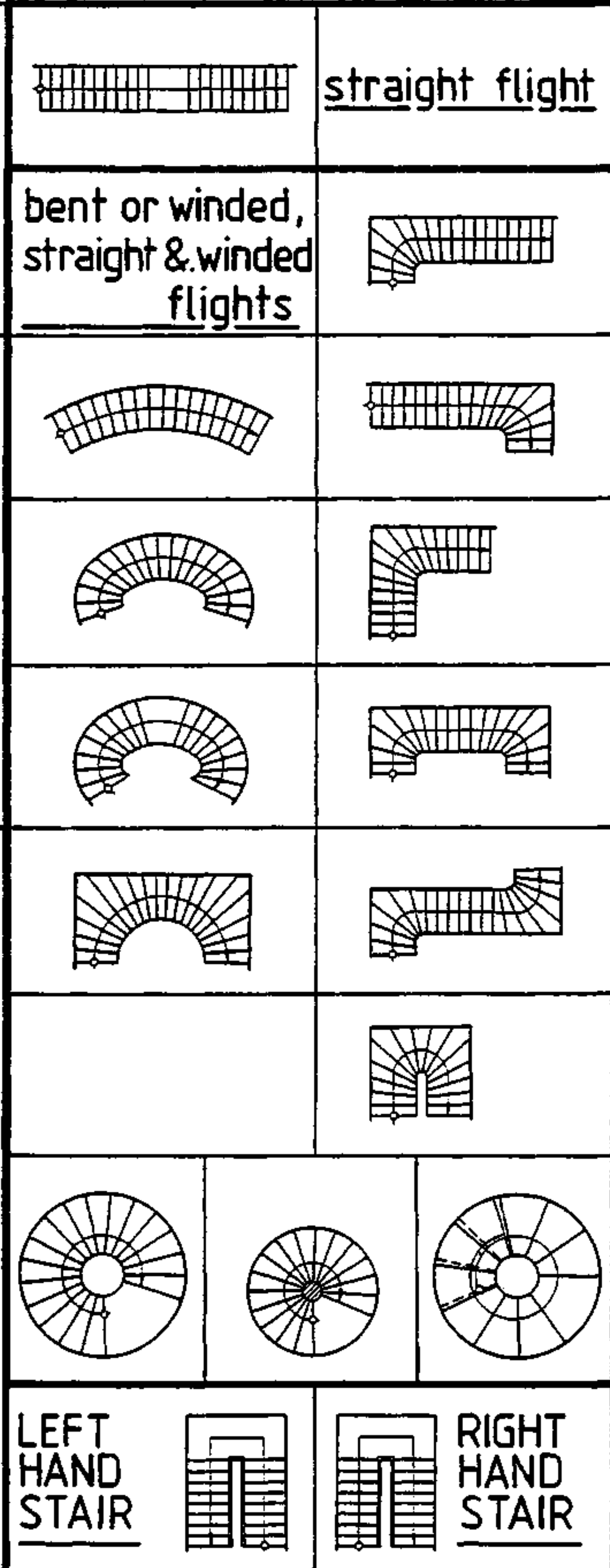

13.4 DESIGN OF STAIRS

13.4 <u>DESIGN OF STAIRS</u>

- Apart from economic factors, a number of other related to COMFORT and SAFETY in use must be considered in the design of a STAIR. These are concerned with <u>ease of ascent</u> and <u>decent</u> and with protection and support at the sides.
- The dimensions of a STAIR will depend on the VOLUME of TRAFFIC it must carry and also on the NATURE of FURNITURE and EQUIPMENT, which is likely to be carried on it.
- The WIDTH of the flights and landings are important, particulary at the turns. The DIMENSIONS of the TREADS and RISERS should be <u>propor-tioned</u> to give easy ascent and decent.
- STAIRS to be placed correctly within the building.
- MEANS OF ESCAPE
  - Unobstructed egress facilities from big buildings to be provided by ESCAPE ROUTES (I.e.stairs, corridors, balconies and exits) These should be protected by FIRE-RESISTING ENCLOSURES with fire-resisting doors to prevent smoke and fire spread.
  - Tall residential blocks may be planned round a single fire-resistent staircase with access by a common cross ventilated lobby.
  - Office-shop-,factory- and public buildings have special regulations; number, width and position of stairways are related to area and height of these buildings, number of users, and fire risk caused by various activities carried out in them.

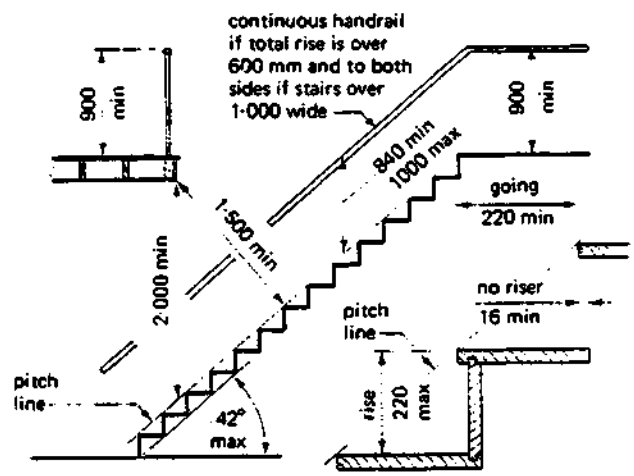

sum of going + twice rise = 550 min. to 700 max.
in any flight all risers of equal height and all goings of equal width

Private Stairways

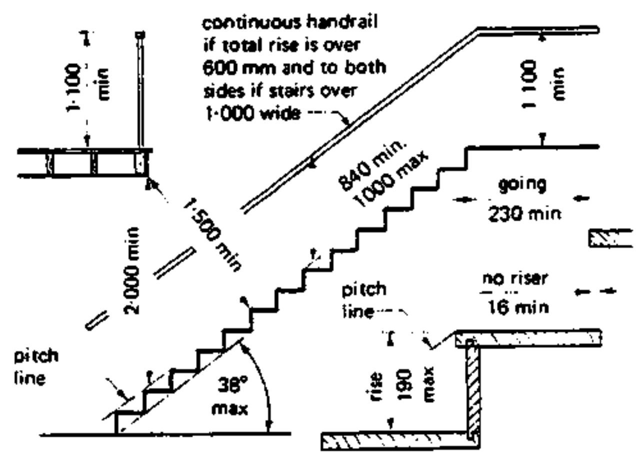

sum of going + twice rise = 550 min. to 700 max.
maximum number of risers in any flight = 16
in any flight all risers of equal height and all goings of equal width.

Common Stairways

13.41 RISE - TREAD- PROPORTION

- Comfort in use of a stair depends largely upon the relative dimentions of the rise and going of the steps.
  Rules for determining the proportion are based to some extend upon the assumptions that about <u>twice as much effort is required to ascend than to walk horizontally.</u>
- The average pace of a person walking horizontally measures up to 70 cm. Ascending, the pace will be reduced to 61- up to 65 cm.
- Important for a comfortable and safe use of a stair is the <u>rise</u>.

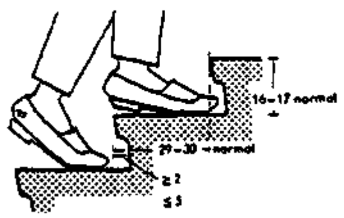

Standard rise of stairs in dwellings and office buildings

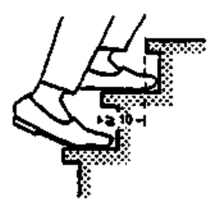

Minimum tread if stairs are curved;

Common rises for different types of stairs	
stair	rise
garden-and open air stairs	12 to 16 cm
stairs in Public Buildings	16 to 18 cm
stairs in flats and dwellings	17 to 19 cm
stair of minor importance	up to 21 cm

13.41 RISE-TREAD-PROPORTION

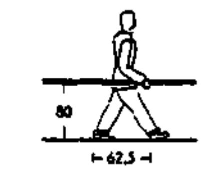

Standard pace of an adult on a horizontal plane

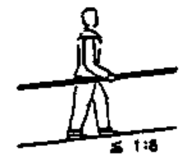

On a ramp the pace is reduced proportionately. Desirable slope 1:10-1:8

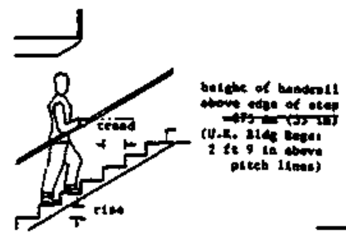

Optimum rise is 2a+1b =625 mm (approx. 23 in; U.K. Bldg Regs 1965)

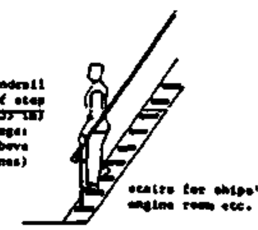

Ladder stairs with handrails up to 210 x 150 mm (8.4 x 6 in), without handrails up to 250 x 100 mm (10 x 4 in)

- Ascending a stair, one has to step over one tread and two rises.
- All the above mentioned facts result in certain rules which are the base for a good <u>rise-tread proportion</u>.

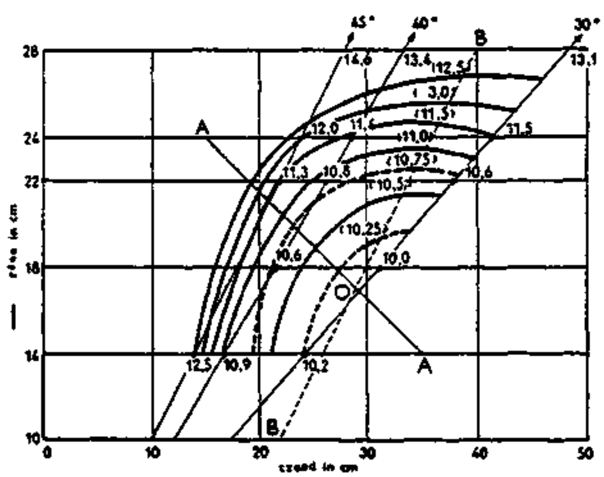

Relationship between energy required and form of stair (after Dr W.Doll & Dr G.Lehmann)

Figures at the left show the rises, those underneath the treads (both in cm). The figures in the curves show energy in calories per mkg climb-effort. The figures above indicate some pitch angles of stairways. The curves connect all points of equal energy consumption. Therefore all stairs with rise-tread proportions on one of these curves are of equal energy consumption.

Line A + A equals the formula .... 2a + 1b = 630 mm (23 in)
Line B - B equals the formula .... 1b - 1a = 120 mm (4.8 in)

RISE-TREAD-PROPORTION

RULES :

I PACE - RULE:

2 Rises (a) + 1 tread(b) = 61 cm to 65 cm (average 63cm)

- 2a + b = 63 cm

  b = 63 cm - 2a

Example:

The rise-tread-proportion for a stair in a flat has to be calculated:

- rise a - (ref.Table)=17-19cm
- difference of floor levels - h - =2,75 m
- Number of rises - h - = always an integer number.

$$n = \frac{h}{\text{average } a} = \frac{2{,}75}{18} = 18{,}33 \text{ cm}$$

Tread - b- to be expressed in round cm numbers:

I Pace-Rule:

b= 63 cm-2.18,33=26,34 cm

choosen: b=26 cm

proportion:15x18,33/26

II Safety-Rule:

b= 46cm-18,33=27,67cm

choosen: b = 28 cm

proportion 15x18,33/28

III Comfort-Rule:

b= 12 cm + 18,33 =30,33 cm

choosen : b = 30 cm

proportion 15x18,33/30

II SAFETY - RULE:

(For stairs with steep or small pitches)

1 rise (a) + 1 tread(b) = 46 cm

- a + b = 46 cm

  b = 46 cm - a

III COMFORT - RULE:

(relatively wide treads with normal rises of 16-19 cm)

Tread (b) - rise (a) =12cm

- b-a = 12 cm

  b = 12 cm + a

Decision:

either: medium proportion 15x18,33/28

or : according to the space available in the staircase.

- The number of rises is defined as - n- (15 in our case).

Upwards the stair begins with a rise followed by a tread. The last rise is followed by the next floor lavel. There is therefore no tread:

No. of treads = No. of rises - I

= n - I

(= 15 - I = 14)

According to the PLAN the LENGTH of the stair - l - is equal to the sum of the treads:

L = b= (n-I)xb

The length - l - for the example:

I L = (15-I)x26=3,64 m

II L = (15-I)x28=3,92 m

III L = (15-I)x30=4,20 m

13.42 SLOPE OR PITCH

13.42 Slope or Pitch

of a stair should not exceed 45^o nor be less than 25^o.
For stairs in regular use a maximum of 35^o should be taken.
The slope is given for the walking line.

$$\boxed{\text{Pitch} = \frac{\text{rise}}{\text{tread}} = \frac{a}{b}}$$

Example for the proportion 18,33/28 cm:

$$\frac{a}{b} = \frac{18{,}33\ \text{cm}}{28\ \text{cm}}$$

(A) - Pitch as proportion

$a : b = 1 : x$

$x = \frac{1 \times b}{a}$

$a : b = 1 : \frac{b}{a}$

Example for proportion 18,33/28 cm

$a : b = 1 : \frac{b}{a}$

$a : b = 1 : \frac{28\ \text{cm}}{18{,}33\ \text{cm}}$

$a : b = 1 : 1{,}53$

(3) - Angle of the Pitch:

$\tan X = \frac{a}{b}$

Example for proportion 18,33/28 cm

$\tan X = \frac{18{,}33\ \text{cm}}{28\ \text{cm}}$

$\tan X = 0{,}6546$

$X = 33{,}21^o$

13.43 LANDINGS

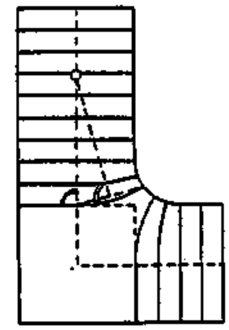

Curved steps at landing on a narrow stair save landing space

13,43 - LANDINGS (already defined) ref.to 13.2

(a) Straight landings to be provided at least after 18 rises (as a REST)
Length of the landing:
in accordance with the pace

$L = N \times 63\ \text{cm} + 2\ \frac{b}{2}$

(No.of paces)

(b) Landings for turning the direction (half-space or quarter space)
Length of the landing:

$L = 1{,}1 \times \text{width}$ (minimum 1m)

The important factor is the space required for the transportation of large pieces of goods.

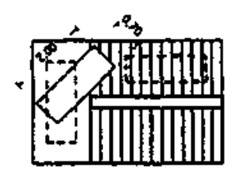

Minimum space required to move furniture

13.4.4. WIDTH

13.44 <u>Width</u>

The usable width of a stair has to be measured at the narrowest place of the staircase.

For main stairs the width depends on the use of the stair. (whereby the type of building the number of persons passing each other or the number of people staying in the building are of importance.)

A Common usable width of STAIRS according to the type of building:

TYPE of BUILDING	WIDTH
1-,2-,3-,family flats/ dwelling houses	0.80 — 1.00 m
bigger flats	1.10 — 1.30 m
public buildings	1.30 — 1.90 m

B Usable width of STAIRS according to the number of persons passing each other

No. of PERSONS	WIDTH
2 PERSONS	1.10 — 1.30 m
3 PERSONS	1.80 — 1.90 m

For STAIRS of minor importance (i.e. emergency stairs, stairs in buildings with a lift, etc). the measurements may be reduced, but they have to be in accordance with the rules of the local authorities.

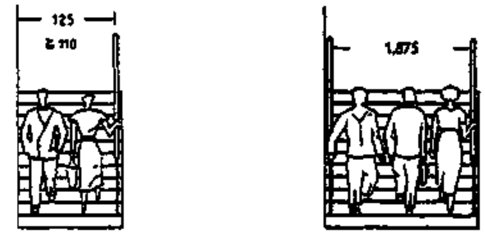

width of stairs allowing two people to pass

8 width of stairs allowing three people to meet and pass

13.45 WALKING LINE

13.45 <u>Walking line</u>: (Definition ref. 13.2)

The representation of the walking line begins with a circle on the nosing of the lowest step and ends with an arrow on the nosing of the next floor level.
The walking line leads always upwards.
In case of all strenght and round flights up to a width of 0.95 m the walking line is always in the centre.
In case of a width exceeding 0.95m the walking line is taken to be generally 45 cm from the centre of the handrail.
On the walking line, the calculated measurements for the treads to be indicated.

13.5 CONSTRUCTION OF STAIRS

13.5 Construction of Stairs

13.51 BRICK STAIRS

Bricks are used for simple external steps and stairs and occasionally for internal use.
The steps must be formed of good hard, square bricks and are bedded in cement mortar on concrete.

If the steps are not built on a natural slope of ground, the deep hardcore filling must be carefully and well consolidated to avoid settlement.

The bonding of the bricks will depend on the dimension of tread and riser and the bricks will normally be laid on edge to expose the face sides and the ends.

13.51 BRICK STAIRS

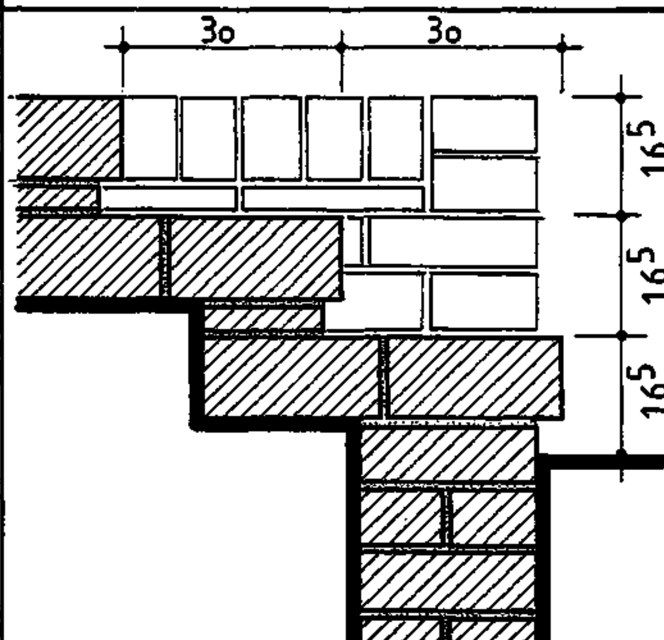

13.52 STONE STAIRS
are used as external and internal stairs.
In case of external stairs the material has to resist the elements therefore GRANITE, BASALD and hard SANDSTONE are suitable materials.

Stone stairs may be in the form steps simply supported on end walls or as cantilever flights and landings or in the form of a circular newel or turret stair.

Simply supported or cantilevered steps can be either rectangular blocks giving a stepped soffit or spandrel steps, splayed on the underside to give a smooth soffit.

Cantilever stone steps should not usually exceed 1.50m to 1.80m in projection, the safe max. depends upon the type of stone used.

If landings are large, these are made up of a number of slabs with joggeled joints.

The newel stair is similar to the spiral newel stair in precast concrete, but because of the transverse weakness of stone the steps are not to cantilever out from the central newel (where the stone is thinnest); the outer ends are built into the enclosing wall, so that each is a step simply supported on the wall and the newel.

13.52 STONE STAIRS

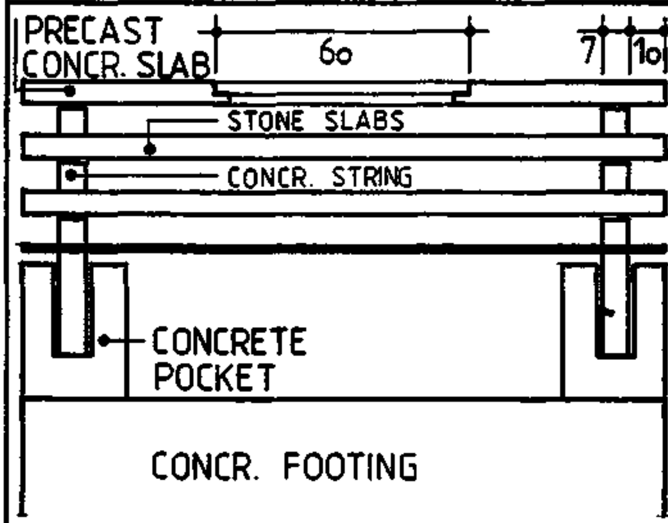

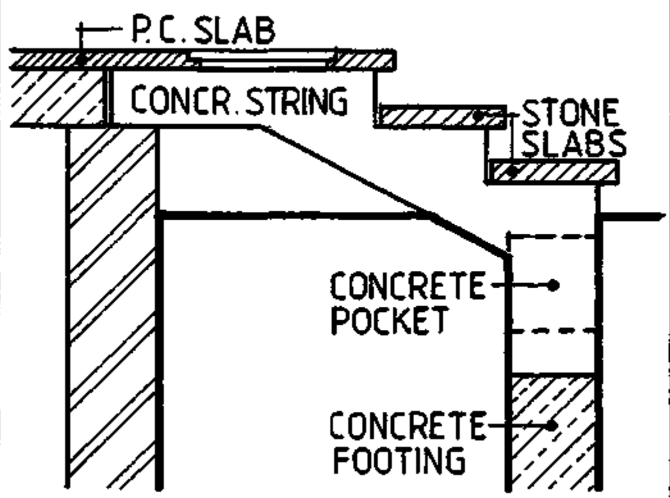

13.53 CONCRETE STAIRS

13.53 Concrete Stairs

Concrete stairs are widely used in all types of buildings
- They have a high degree of fire resistance,
- are strong, and
- make possible a wide variety of forms.

They may be cast in-situ or be precast as whole flights of in seperate parts.

13.531 In Situ Cast R.C.Stairs

- The concrete specification is usually
  - concrete mix 1 : 2 : 4
  - min. cover of concrete over reinforcement : 15 mm (or bar diameter whichever is greater)
  - waist thickness usually between 10 and 25 cm depending on stair type.
  - mild steel or yield steel bars can be used as reinforcement.

    The bars being lapped to starter bars at the ground floor and taken into the landing or floor support slab.

    Number, Diameter and Spacing of the main and distribution reinforcement must always been calculated for each stairway.

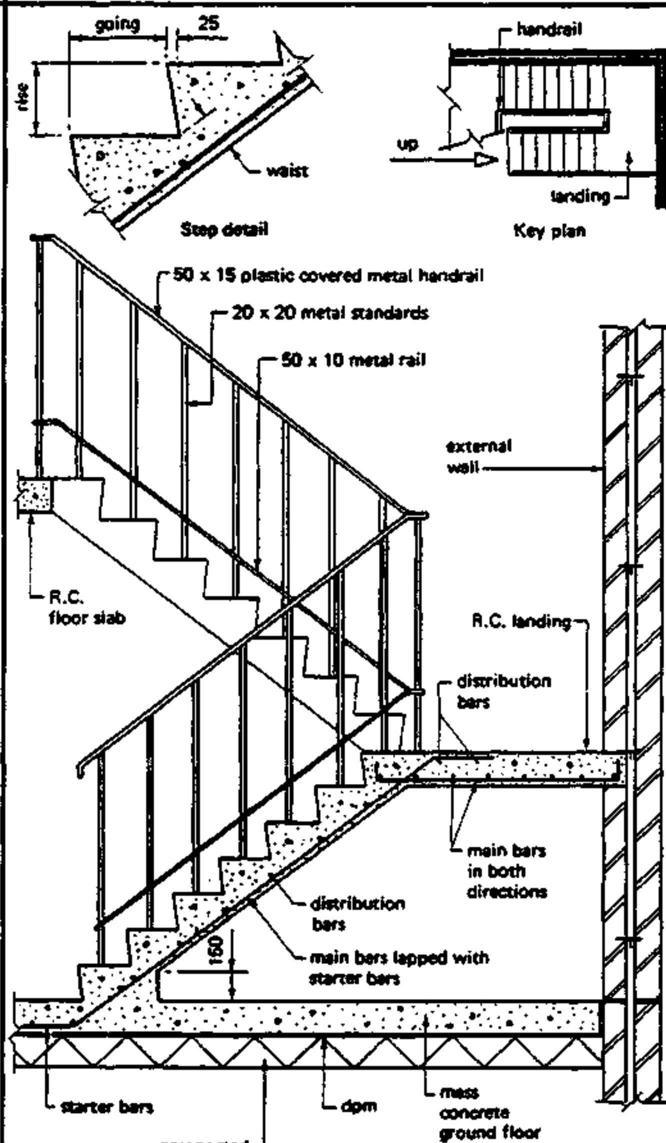

Simple R.C. in situ stairs

CONCRETE STAIRS

- A wide variety of finishes can be applied to the tread surface of the stairs.
- The soffits can be left as struck from the formwork and decorated or finished with a coat of spray plaster or a coat of finishing plaster
- The basic formwork requirements are the same as for formwork to a framed structure.
  - The stair profile is built of an adequately supported soffit of sheet material by using a cut string.
  - Riser boards are used to form the leading face of the steps (these should have a splayed bottom edge to enable complete trowelling of the tread surfaces and to ensure that air is not trapped under the bottom edge of the riser board thus causing voids.
  - If the stair abuts a vertical surface, two methods can be considered to provide the abutment support for the riser boards.

    a) a reversed cut string or

    b) a wall board with hangers.
  - wide stairs can have a reverse cut string as a central support to the riserboards to keep the thickness of these within an ecceptable load limit.

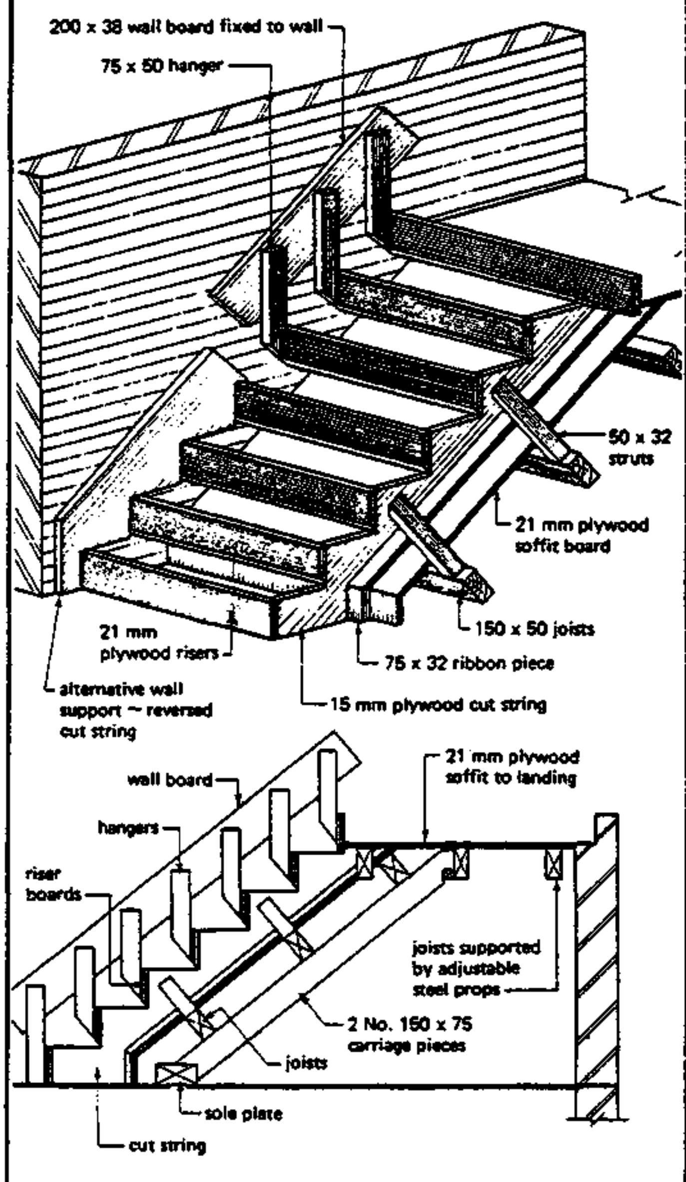

Typical formwork to R.C. in situ stairs

Single flight stairs
- Long and cross spans

- The structural behaviour of a stair flight is very similar to that of a simply supported slab,
  - its effective thickness being its waist. -
- When considering single flights between floors, it should be realised that it is uneconomic to span the flight between landings, since an extra distance of about 1 m at either and of the flight would result in a long span of up to 6 m.
- If downstand beams are provided at the edges of the landings, the effective span may be reduced to 4 m for the same flight which would result in a bending moment reduction of over 50 %.
- The arrangement of reinforcement is shown in figure

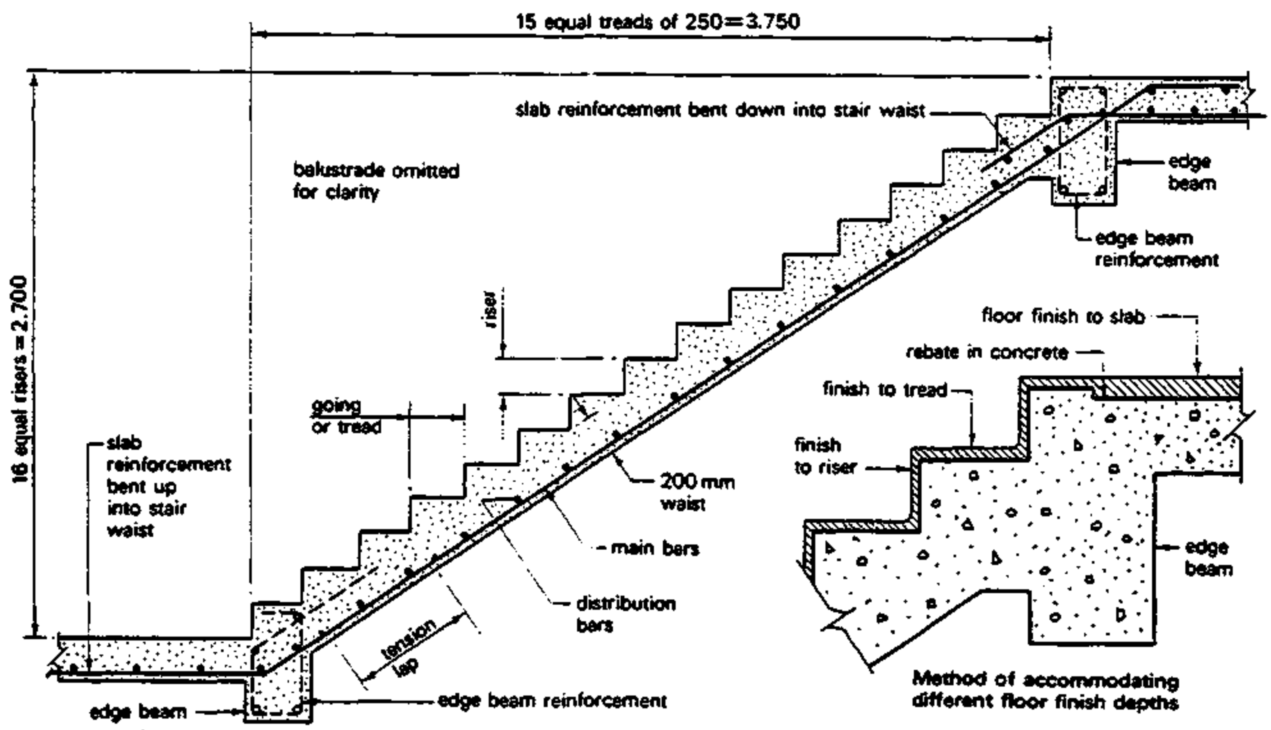

Straight flight concrete stairs

Method of accommodating different floor finish depths

HALF FLIGHTs WITH LANDINGS

Half flights with landings
(inclined slab concr.stair)

- Where half landings are incorporated it is normal for stairs to span on to the landings with the landings spanning cross ways.
- The arrangement of reinf.bars are shown in the figure. It should be noticed again, that the tension lab is required at the top and bottom of each flight, this is to overcome the tension inducted by the tendency of the external angles of the junctions between stair flights and landings to open out.

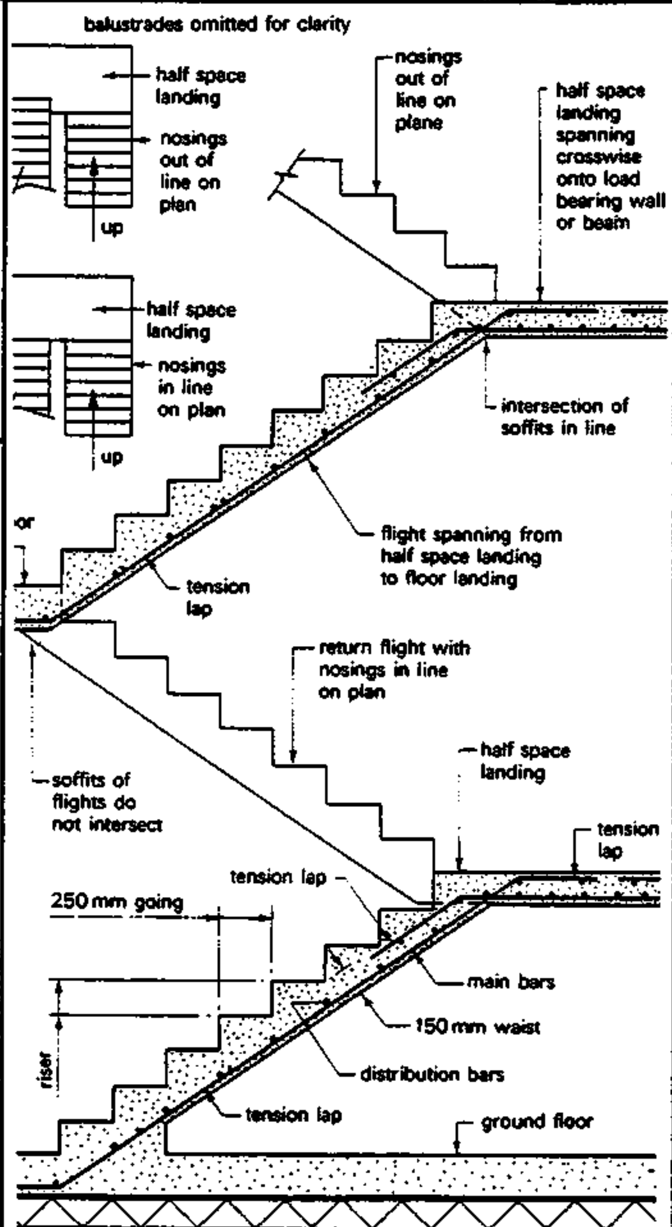

Inclined slab concrete stair with half space landings

STRING BEAM STAIRS

String beam stairs
- are an alternative design for the stairs described above. A string or edge beam is used to span from landing to landing to resist the bending moment with the steps spanning crosswise between them;
- this usually results in a thinner waist dimension and an overall saving in the concr. volume required. But this saving in material is usually offset by the extra formwork costs.
- The string beams can be either upstand or downstand in format and to both sides if the stairs are free standing.

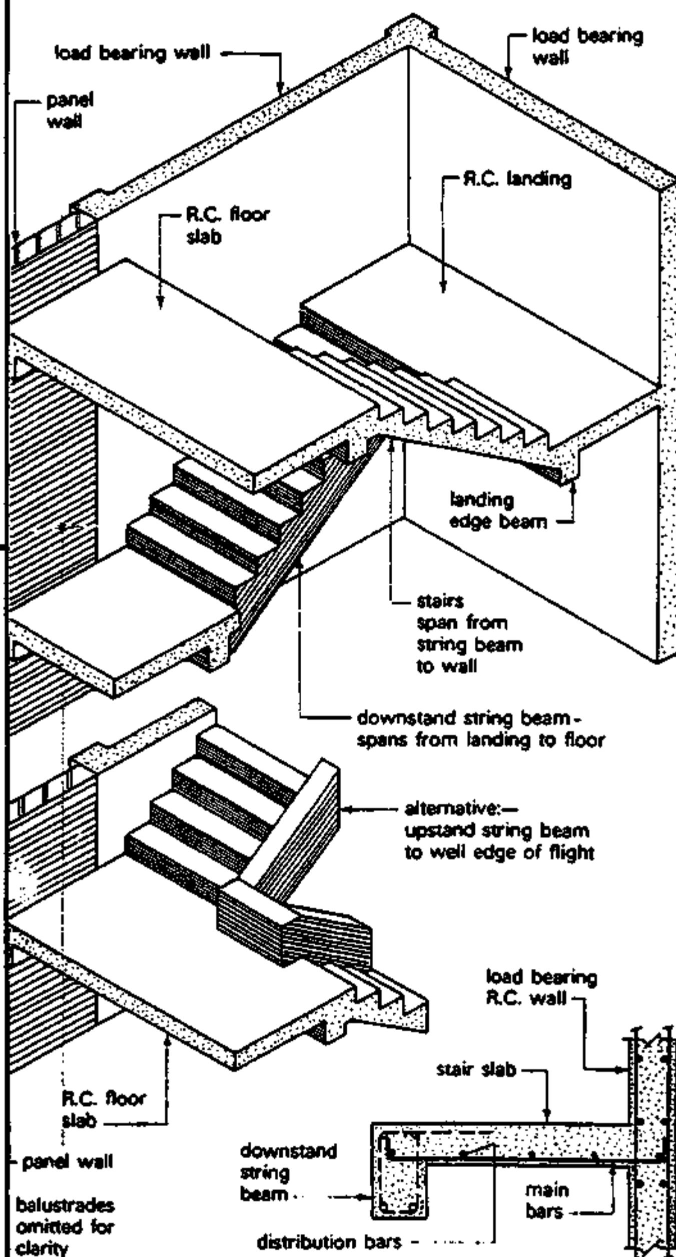

String beam concrete stairs

CRANKED SLAB STAIRS

Cranked slab stairs

- are very often used as a special feature, since the half space landing has no visible support being designed as a cantilever slab.
- Bending, buckling and torsions stresses are induced with this form of design.

Creating the need for reinforcement to both, faces of the landing and slab or waist of the flights.

- The amount of reinforcement required can sometimes create site problems with regard to placing and compacting the concrete.

Typical details of a cranked slab stair (which is also known as a continous stair, scissor stair or jack knife stair) are shown in the figure.

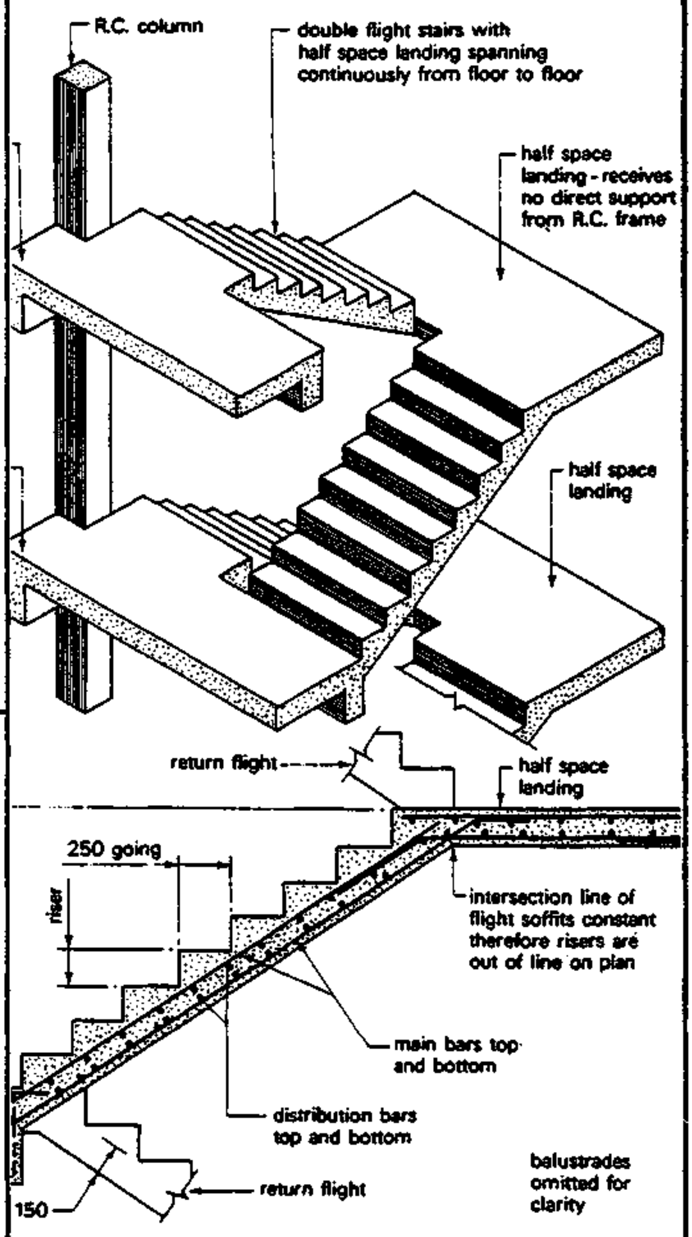

Cranked or continuous slab concrete stairs

CANTILEVER STAIRS

Cantilever stairs:
(sometimes called spine wall stairs) consist of a central vertical wall from which the flights and half space landings are cantilevered.

- The wall provides a degree of fire resistance between the flights and are therefore mainly used for escape stairs.

Since both flights and landings are cantilevers the reinforcement is placed in the top of the flight slab and in the upper surface of the landing to counteract the induced negative bending moments.

The plan arrangement can be single straight flight or - as is usual - two equal flights with an intermediate half space landing between consecutive stair flights.

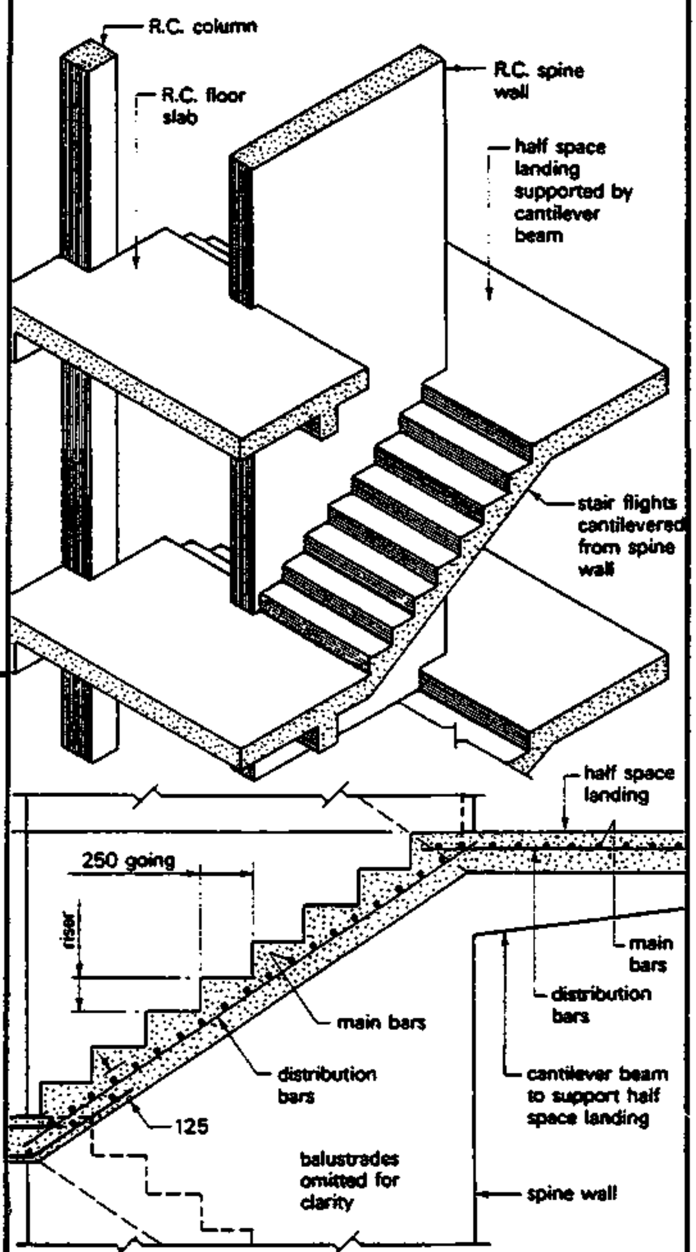

Cantilever concrete stairs

SPIRAL STAIRS

Spiral stairs are used mainly as accomodation stairs in the foyers of prestige buildings such as theatres and banks.

They can be expensive to construct, being normally at least seven times the cost of conventional stairs.

- The plan is generally based on a circle althogh it is possible to design an open spiral stair with an elliptical core.
  The stair can be formed around a central large diameter circular column in a similar manner to that described for cantilivered stairs or - as it is an usual design with a circular open stair well.
  Torsion, Tension and compressive stresses are induced in this form of stair which will require reinforcement to both faces of the slab in the form of radial main bars, bent to the curve of the slab with distribution bares across the width of the flight.

Formwork for spiral stairs consists of a central vertical core or barrel to form the open stair well to which the soffit and riser boards are set out and fixed, the whole arrangement being propped and strutted as required from the floor level in a conventional manner.

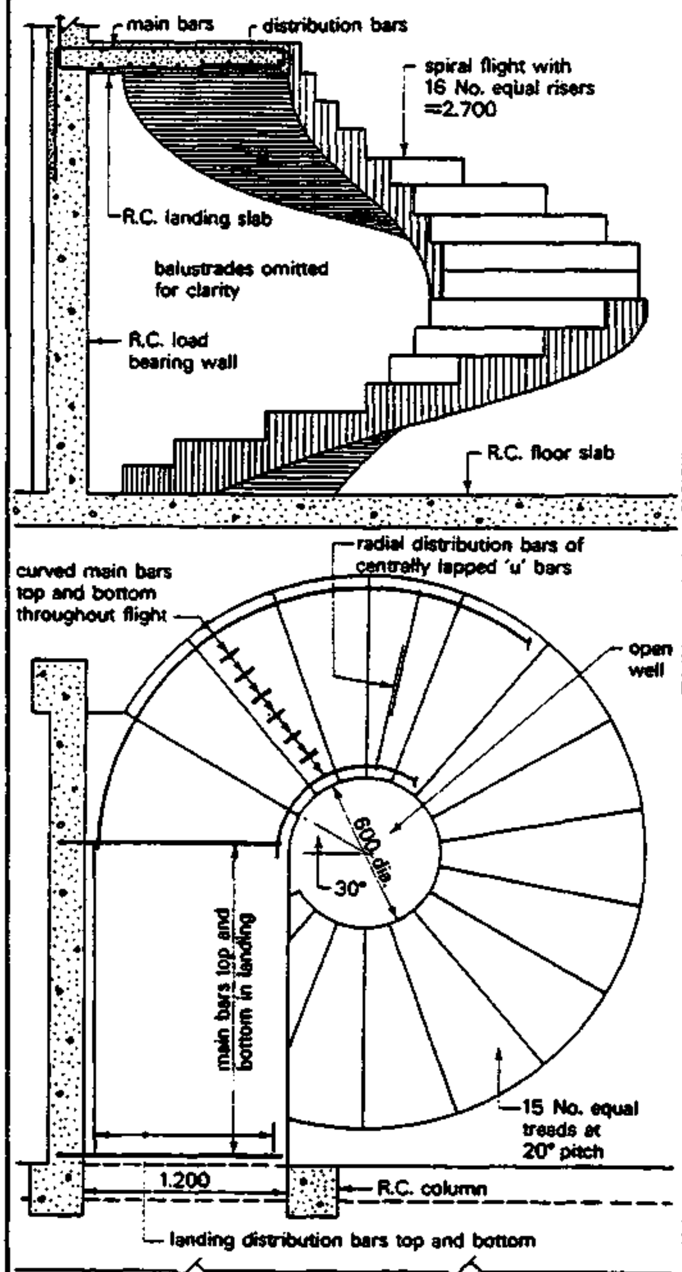

Open spiral concrete stairs

13.532 Precast Concrete Stairs

- Most of the concrete stair arrangements previously described can be produced as PRECAST CONCRETE COMPONENTS which can have the following advantages:
  - better quality control of the finished product
  - saving in site space, since formwork storage and fabrication space is no longer necessary
  - stairway enclosing shaft can be utilised as a space for lifting materials dureing the major construction period
  - saving in time
  - can usually be positioned and fixed by semi-skilled labour.
- Like all precast components the stairs must be
  --repetitive and
  --in sufficient quantity
  to justify their use and to be an economic proposition.
- Simple precast concr. stairs spanning between landings can have a simple bearing or, by leaving projecting reinforcement to be grouted into preformed slots in the landings, they can be given a degree of structural continuity.
- Precast concrete stairs, constructed from a series of precast steps are either
  - built into or
  - cantilevered from

  a structural wall.

13.532 PRECAST CONCRETE STAIRS

- The use of precaste concr. steps to form a stair way is limited to situations such as
  - short flights between changes in level
  - external stairs to basements

  etc.
  They rely on the load bearing wall for support and if contilevered on the downward load of the wall to provide the necessary reaction.
- The support wall has to provide the necessary load and strength and at the same time it has to be bonded or cut around the stooled and of the steps.
- The steps are usually fabricated in factoris. They consist of a concrete core covered with a facing material (artificial stone).
  To reduce the weight, the steps are often produced as hollow steps.
  It is advisable to protect the edges of the steps.

STRAIGHT FLIGHT PRECAST CONCRETE STAIRS

- Straight flight precast concrete stairs with a simple bearing require only Bottom Reinforcement to the slab and Extra Reinforcement to strengthen the bearing rebate or nib.

  The bearing location is a rabate cost in the in-situ floor slab or landing, leaving a tolerance gap of 8 to 12 mm which is filled with a compressible material to form a flexible joint.

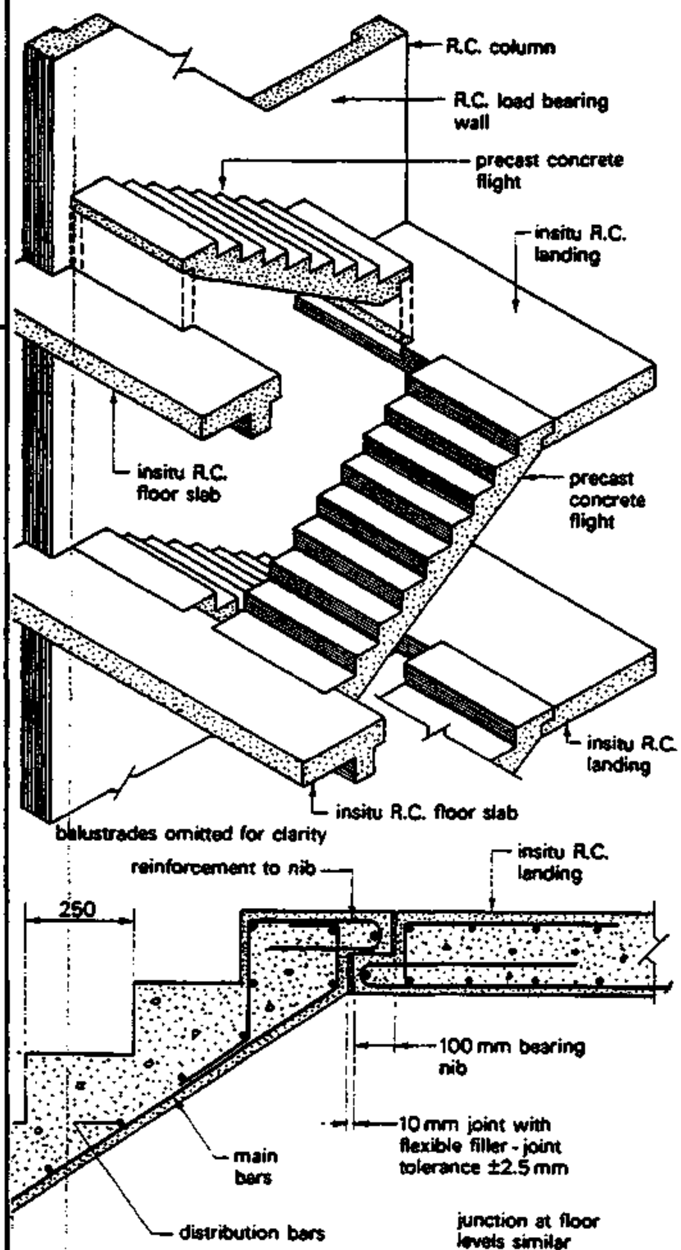

Precast concrete straight flight stairs

CRANKED SLAB PRECAST CONCRETE STAIRS

- <u>Cranked slab precast concrete stairs</u>
  are usually formed as an OPEN WELL stair. The bearing for the precast landings to the in situ floor or to the structural frame is usually in the form of a simple bearing.
  The infill can be of in-situ concrete with structural continuity (provided by leaving reinforcement projecting from the inside edge of the landings)
  N.B. when p.c.c. stair flights are hoisted into position,
  different stresses may be inducted from those which will be encountered in the fixed position.
  To overcome this problem the designer can either reinforce the units for both conditions OR - as is more usual - provide definite lifting points in the form of projecting lugs or by utilising any holes cast in to receive the balustrade.

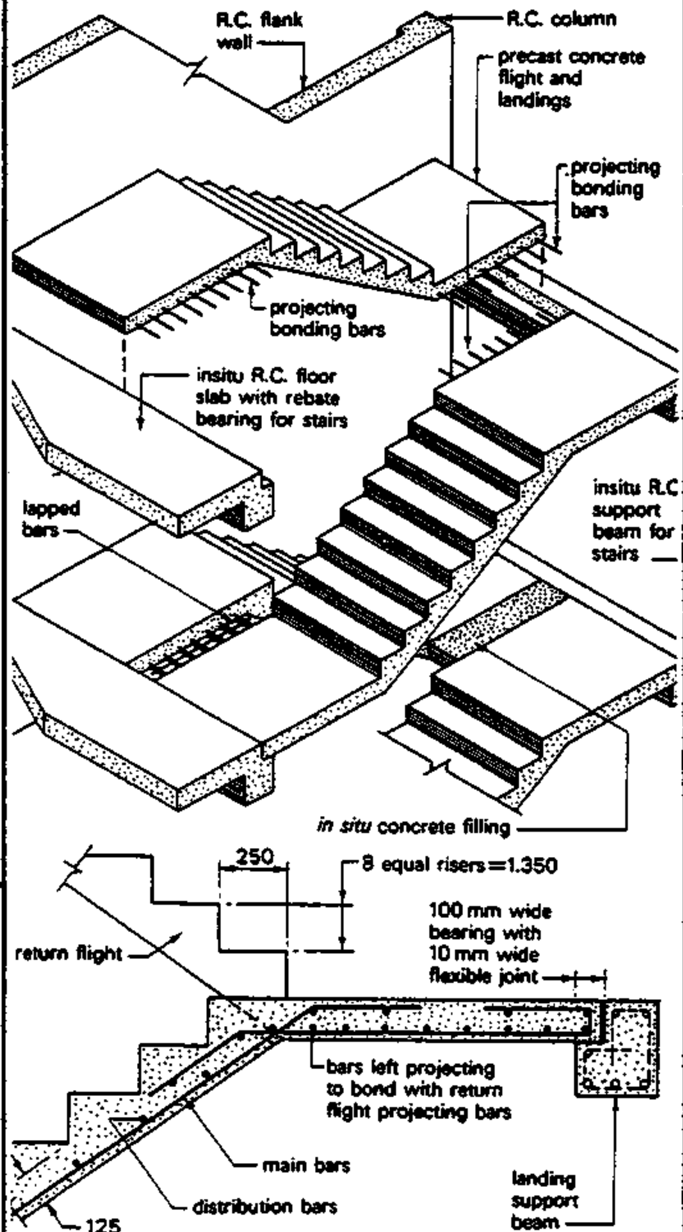

Precast concrete cranked slab stairs

OPEN RISER PRECAST CONCRETE STAIRS

- Precast open riser stairs can be both: economic and attractive - consisting of a central spine beam in the form of a cut string supporting double cantilever treads of timber or precast concrete. The foot of the lowest spine beam is located and grounted into a preformed pocket cast in the floor whereas the support at landing and floor levels is a simple bearing located in a housing cast into the slab edge (ref. Fig.) Provisions for fixings of steps to the beam are given in the figure.
  . Reinforcement to the treads is simply a meshwork of straight bars.
  Spine beam reinforcement to be similar to that of a normal beam.
  . the anchor bolts to be placed sideways rather than lengthways to avoid possible rocking.
  . the finishes are applied after the fixing slots have been grouted up so that no fixings show through.
  . balusters are bolted directly to the treads and holes can be left to provide for these in casting.

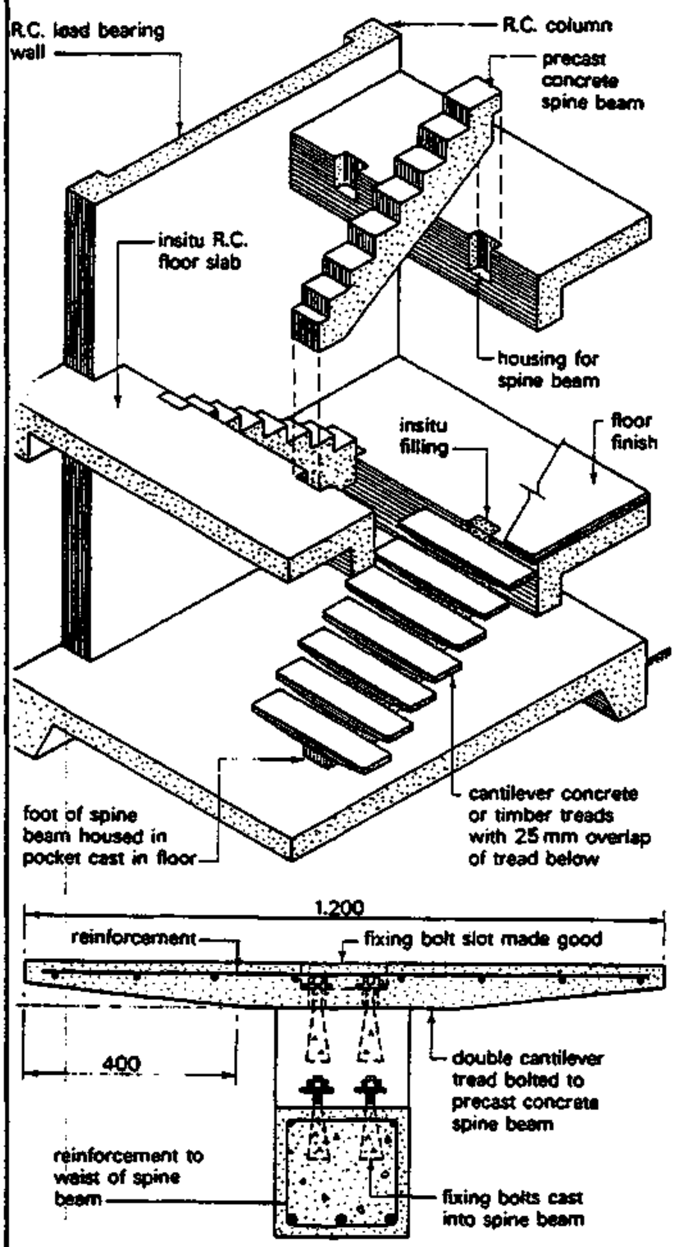

Precast concrete open riser stairs

SPIRAL PRECAST CONCRETE STAIRS

- Spiral Stairs
in precast concrete work are based upon the stone stairs found in many historie buildings.
  - They are usually open riser stairs with a r.c. core or (alternatively) a concrete - filled steel tube core.
  - Holes are formed at the extreme ends of the treads, to receive the handrail supports in such a manner that the standard passes through a tread and is fixed to the underside of the tread immediately below. A hollow spacer or distance piece is usually incorporated between the two consecutive treads.

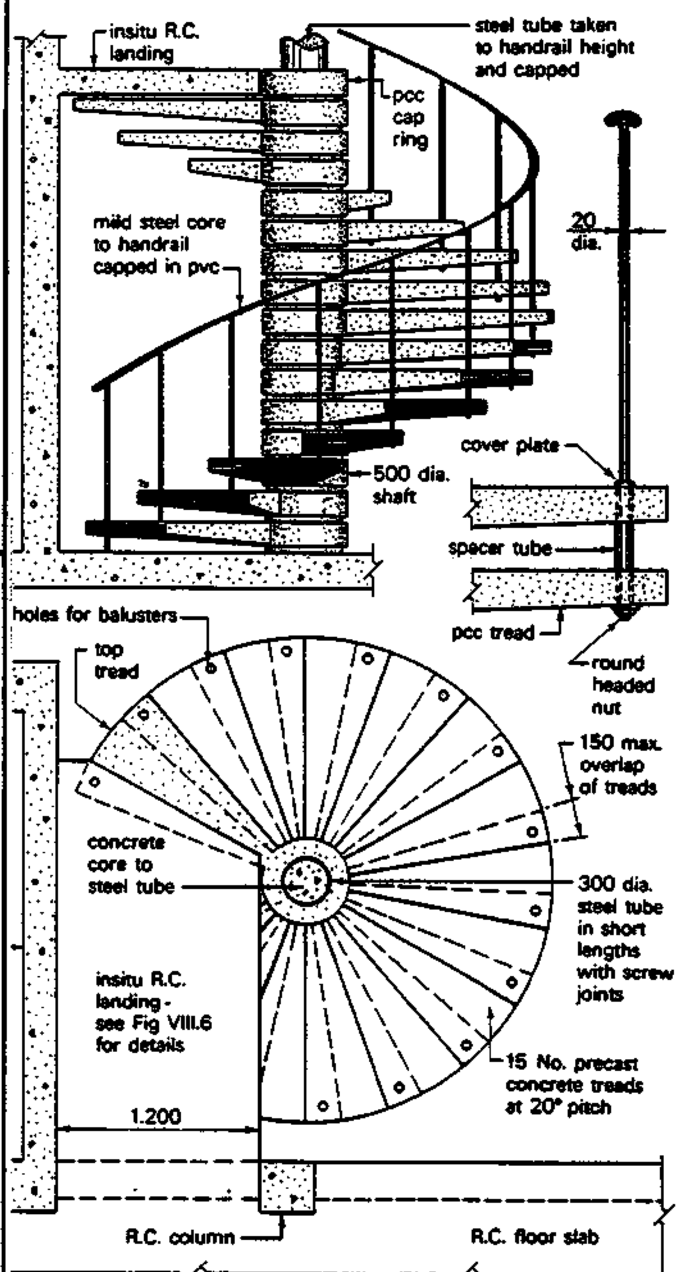

Precast concrete spiral stairs

13.54 TIMBER STAIRS

13.54 Timber Stairs

- timber stairs are commonly used in domestic buildings with either
  - . closed or
  - . open rises.
- Due to the position of their supports four basic types of timber stairs may be produced:

CLOSED STRING STAIRS

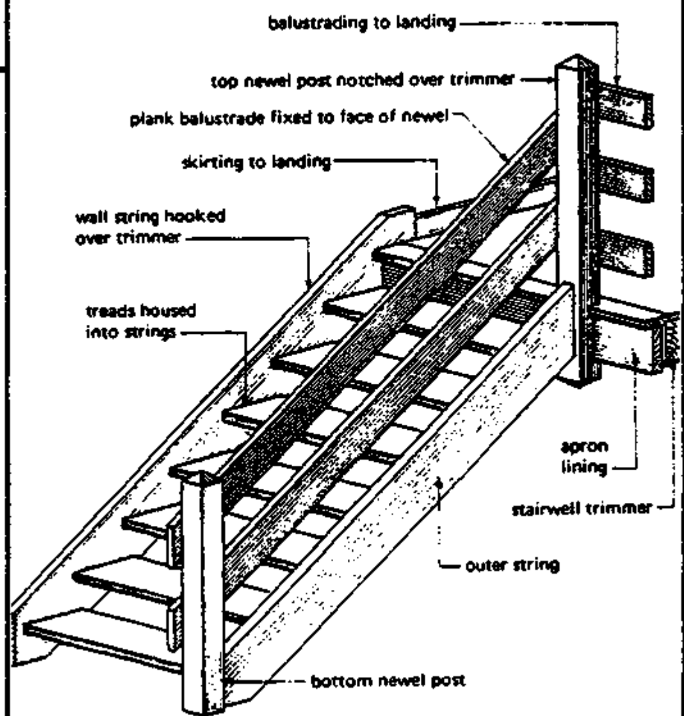

Typical arrangement

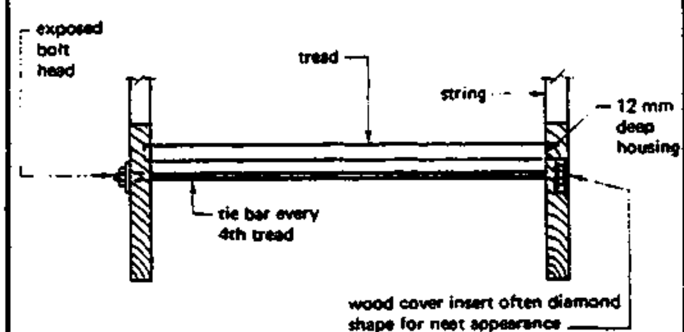

Alternative tie bar arrangements

Closed string open tread stairs

I. Closed string stairs

The treads are tightly housed into the strings which are tied together with long steel tie bars under the first, last and every fourth tread. The nuts and washers can be housed into the strings and covered with timber inserts.

CUT STRINGS or CARRIAGES

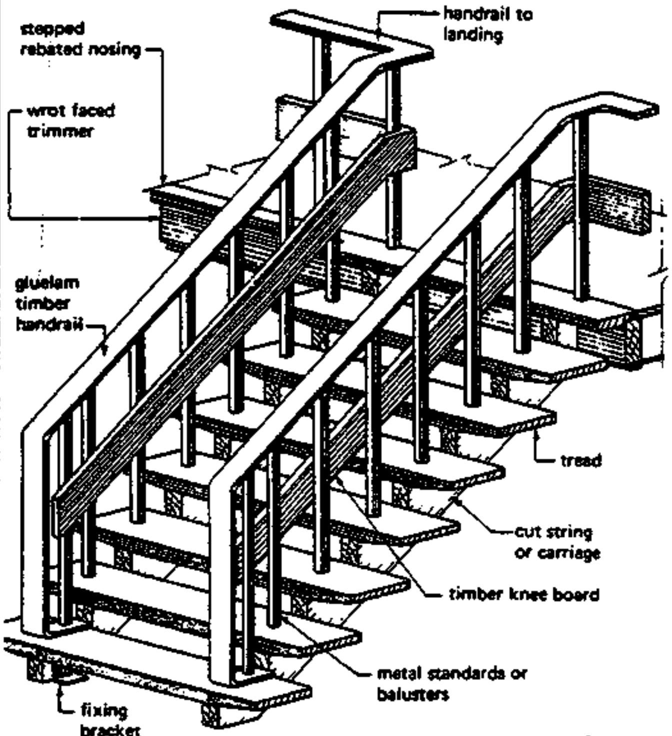

Typical arrangement

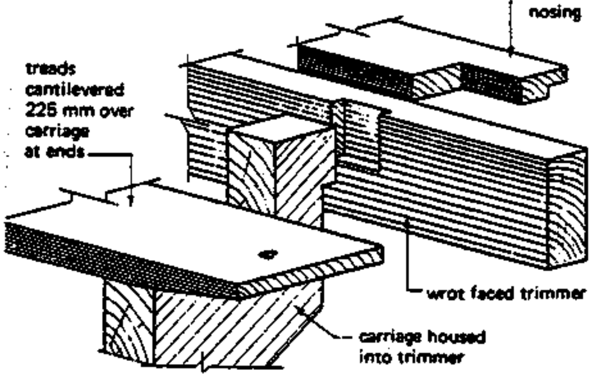

II Cut strings or Carriages

These are used to support cantilever treads and can be worked from the solid or of laminated construction. The upper end of the carrage can be housed into the stairwell trimming-member with possible additional support from metal brackets. The foot of the carriage is housed in a purpose made metal shoe or fixed with metal angle brackets.

III Mono-carriage (or spine beam)

employs a single central carriage with double cantilever treads. The carriage is of laminated construction and very often of a tapered section to reduce the apparent bulky appearence. The foot of the carriage is secured with a purpose made metal shoe in conjunction with timber connectors.

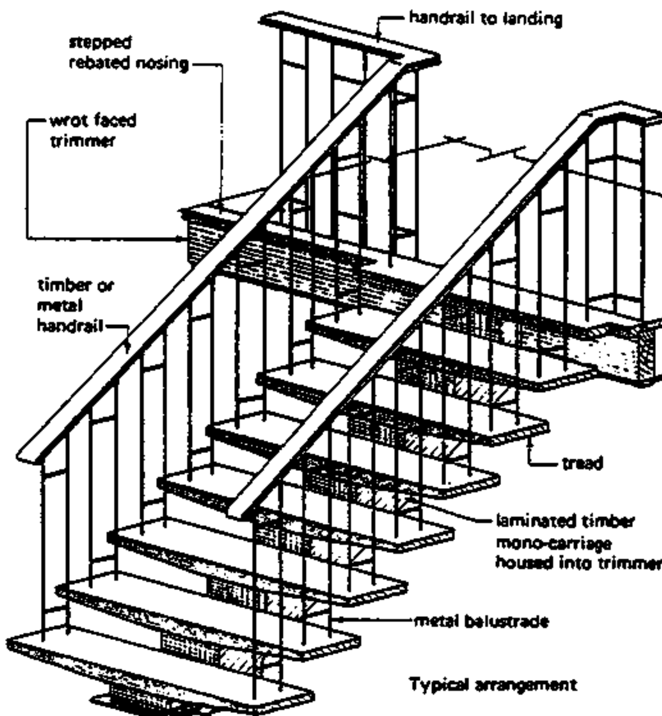

Typical arrangement

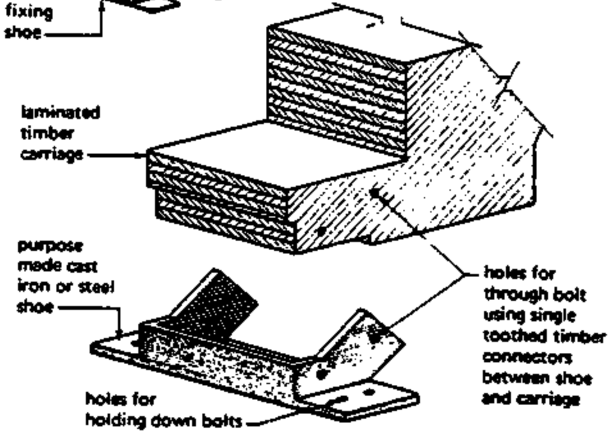

MONO CARRIAGE

13. STAIRS	TIMBER STAIRS	BUILDING CONSTR. LECTURE
compiled : D. VOLKE DEC. '82		CET 7031/1 13.528

HANGING STAIRS

IV <u>Hanging stairs</u>

consist of treads which are kept in position by tension bars

- There are two methods of hanging the treads:

  Either tubular metal balusters, fixed at the ceiling, or a solid hardwood handrail are used as means of support for the treads.
- Cut of the number of different types of staircases, only the construction of newel and ladder type stairs suitable for domestic buildings will be considered

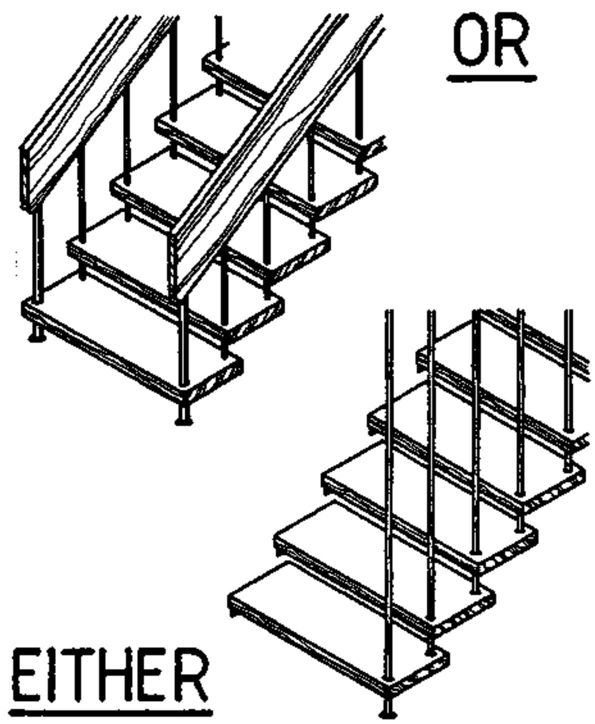

STRAIGHT FLIGHT STAIRS

<u>Straight flight stairs</u>
may be constructed between walls which give it continous support or it may be open on one or both sides.

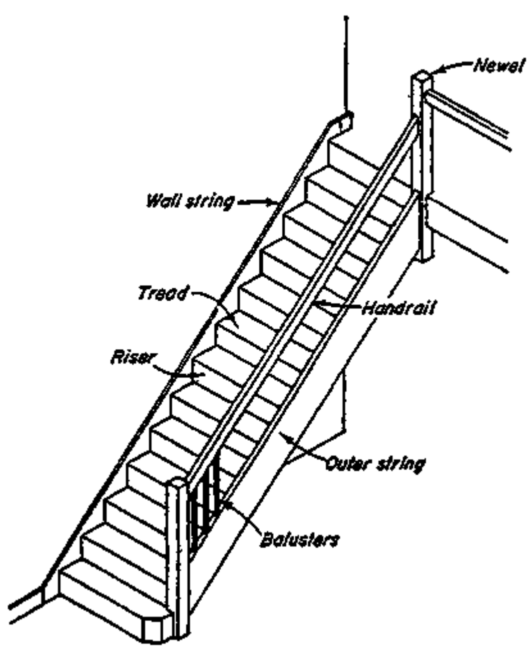

CLOSED-RISER STAIRS
with CLOSE STRINGS

OPEN-RISER STAIR
with CLOSE
STRINGS

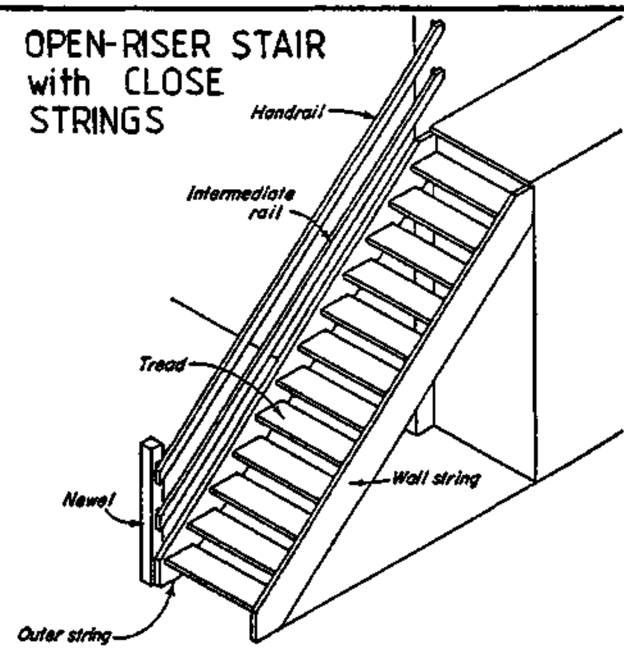

- The sizes of members are not usually calculated, they are determined out of experiance.

  - Treads: 32 mm thick
    (27 mm plained)
  - Risers 25 mm thick
    (21 mm plained)
  - Method of fixing
    The top edge of the riser may be simply butted against the underside of the tread, but the joints should then be covered by a small mould fixed to the tread (to conceal any gap formed by shrinkage)
  - Projection of nosin g: not more then 25 mm. The nosing profile may be square, slightly splayed with rounded top edge or halfround.
  - an alternative 13 mm plywood may be used for the risers (ref. fig.)
  - The ends of the treads and risers are housed into grooves or housings
    - about 12 mm deep - formed in the strings. The housings are wider than thickness of tread and riser. They are tapered so that hardwood wedges, after covering with glue, may be driven behind the treads and risers forcing them tight against the outer faces of the housings.

STRAIGHT FLIGHT STAIRS

Triangular blocks of wood are glued at the junctions of the treads with the risers and strings to give increased rigidity to the whole staircase.

- Wall string: about 38 mm thick
  securely plugged to the wall.
- Outer string 45-50 mm thick
  It must be thicker than the wallstring as it acts

as an inclined beam. (Whereas the former serves as a plate, supported by the wall).

- For stairs wider than 90 cm it is desirable to introduce intermediate support in the form of
  100 x 75 mm or
  100 x 50 mm rough bearers
  or carriages under the steps.

- The outer string is framed in to 100 x 100 mm newels at top and bottom of the flight.
  The strength of newel stairs depends largely on the rigidity of the joint between the string and newelpost. The normal method of joints the two is shown in the figure. This consists of a draw-pinned joint consisting of two obtique haunch tenons on the end of the string fitted into

STRAIGHT FLIGHT STAIRS

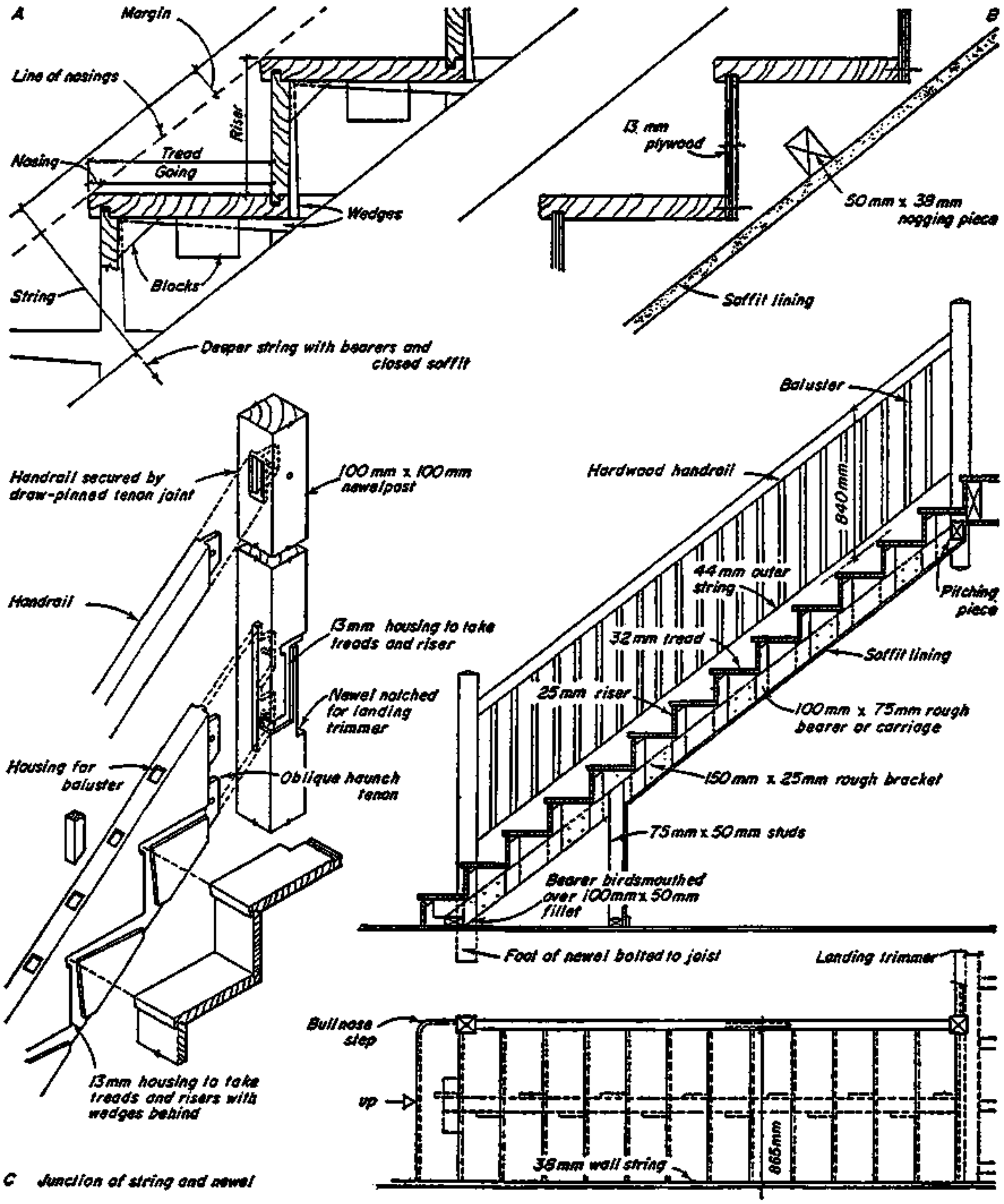

mortices formed by the newe
The whole is secured by a slightly tapering hardwood dowel at each tenon.
The newel post - like the strings - is housed to take the treads and risers and is (in addition) notched to fit over the landing trimmer to which it is nailed or - preferably - bolted.
The junction with the lower newel is similar, but the joint is reversed as shown.

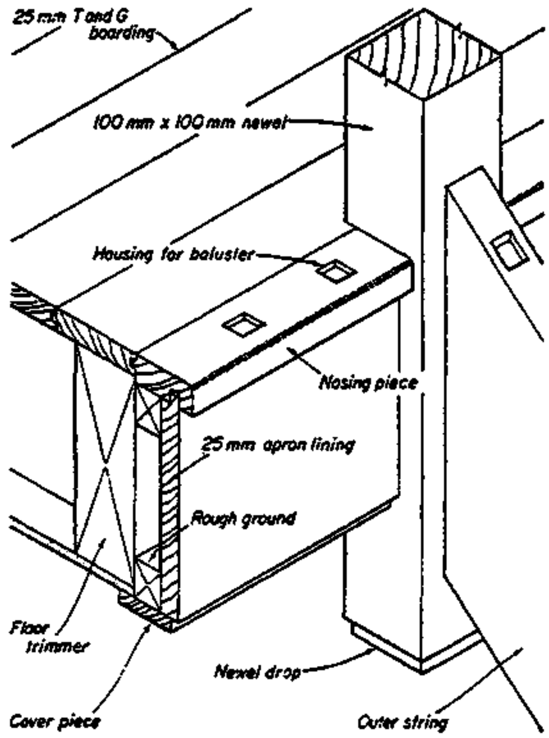

Apron lining to landing

STRAIGHT FLIGHT STAIRS

For architectural reasons the newel at the bottom of a stair case is usually set back one (or sometimes two) risers.

- The entry to the stair is less aprupt and may be made slightly from the side as mounting commences.

A specially shaped end to the bottom step (or steps) must be formed as shown in the examples illustrated.

The foot of the lower newel should be taken through the floor and bolted to a convenient joist, to give a fire and secure connection.
The upper newel extends a short way below the string.
This is termed a <u>newel drop</u>.

- Ends of handrails should be housed slightly into the newels and fixed by draw-pinned tenon joints.
- The trimmer to the upper floor landing is faced with an APRON LINING, toungued and grooved at the top to a nosing piece (preferably the same thickness as the stair treads, into which any landing balusters are housed and the floor boards tongued and grooved.

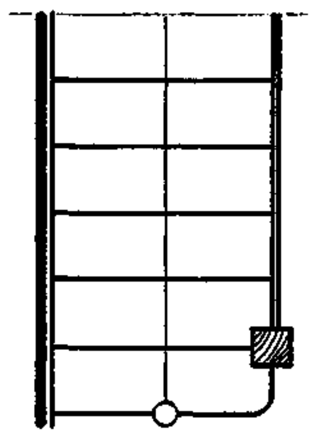
BULLNOSE STEP

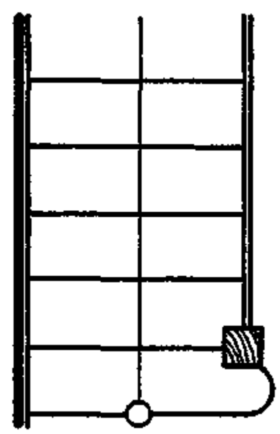
'D'-STEP

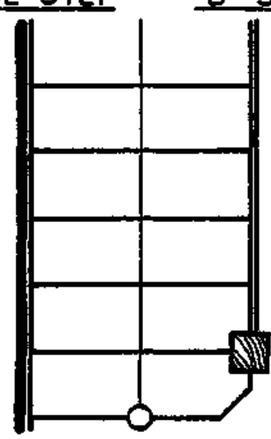
SPLAYED STEP

STAIR CONSTRUCTION DETAILS

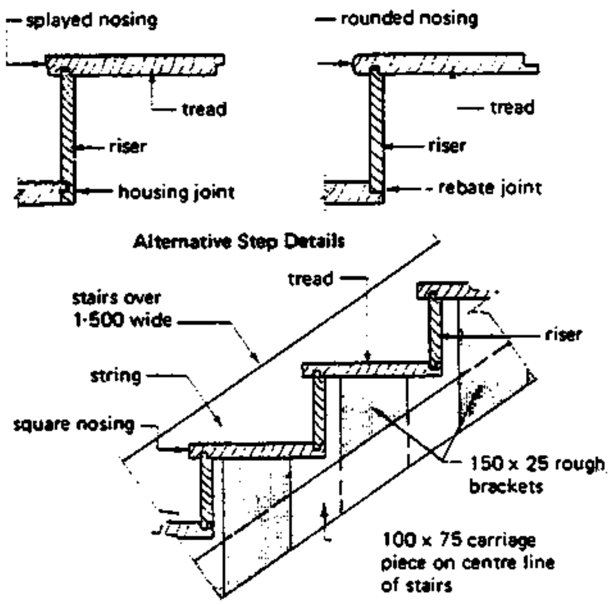

alternative STEP DETAILS

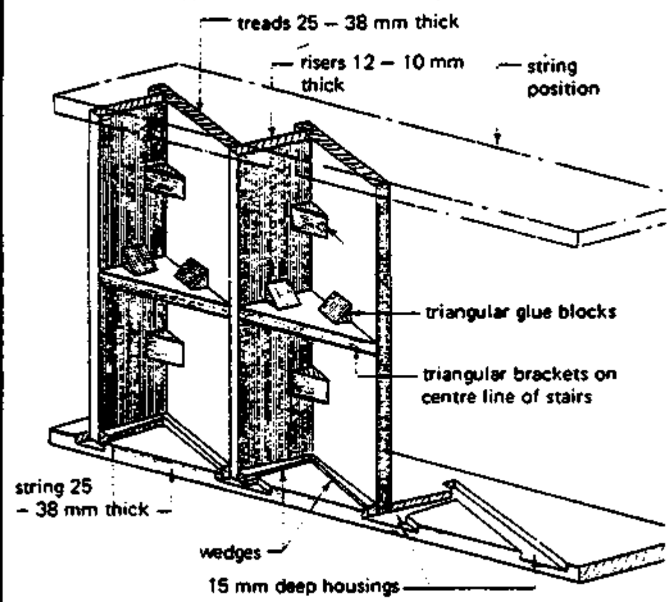

triangular GLUE BLOCKS & BRACKETS

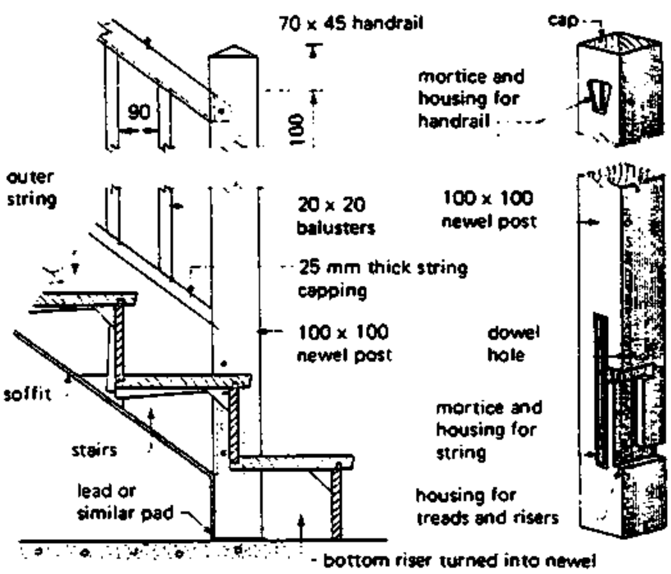

detail at : BOTTOM NEWEL

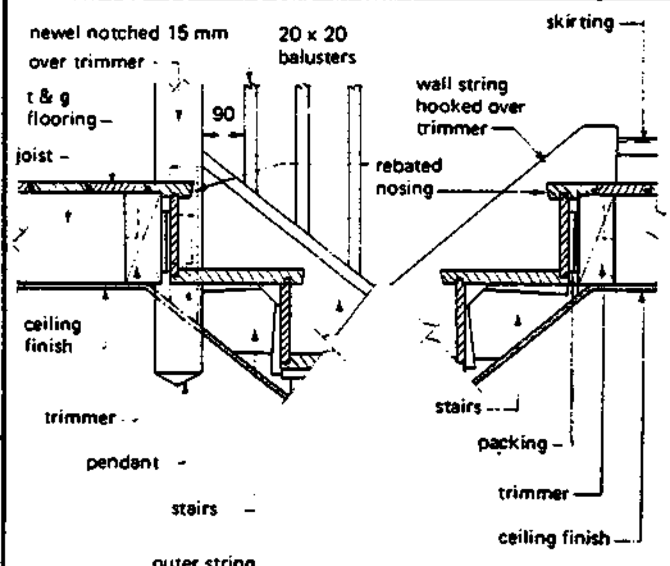

details at : LANDING

13. STAIRS compiled : D. VOLKE DEC. '82	TIMBER STAIRS	BUILDING CONSTR. LECTURE CET 7031 / 113.5 33
TCA TECHNICAL COLLEGE ARUSHA CHUO CHA UFUNDI ARUSHA	CIVIL ENGINEER. DEPARTMENT	33

OPEN RISER STAIRS

Open-riser or ladder stairs may be constructed with close or cut strings.

- When close strings the connection between the ends of the treads and the strings is not as good as in a closed-riser stair, since there are no wedges or side blocks connecting the two.
  Therefore: The strings should be tied together by 10 mm or 12 mm Ø metal rods with sun and pelleted ends placed under every 4th tread.
- Screw fising: is not very strong as the screws enter the end grain of the tread.
- Glued dowels are better than screws.
- Cut strings are tied together by the treads which rest upon the string and are screwed to it.

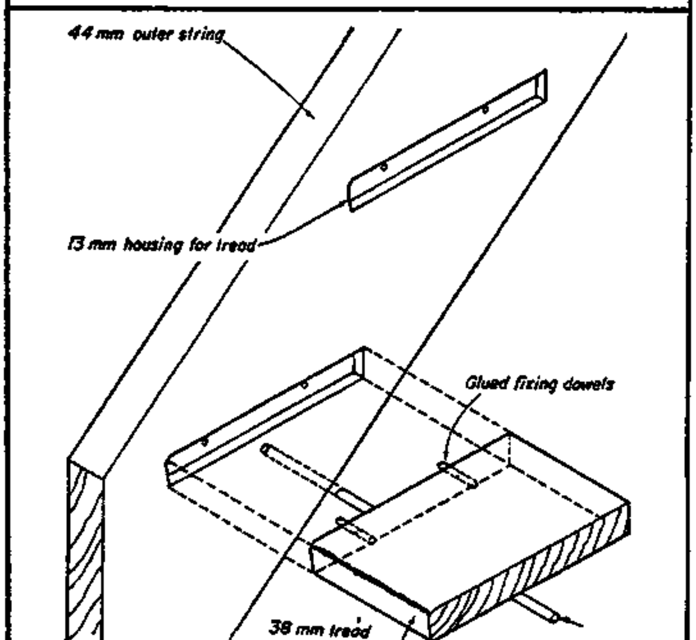

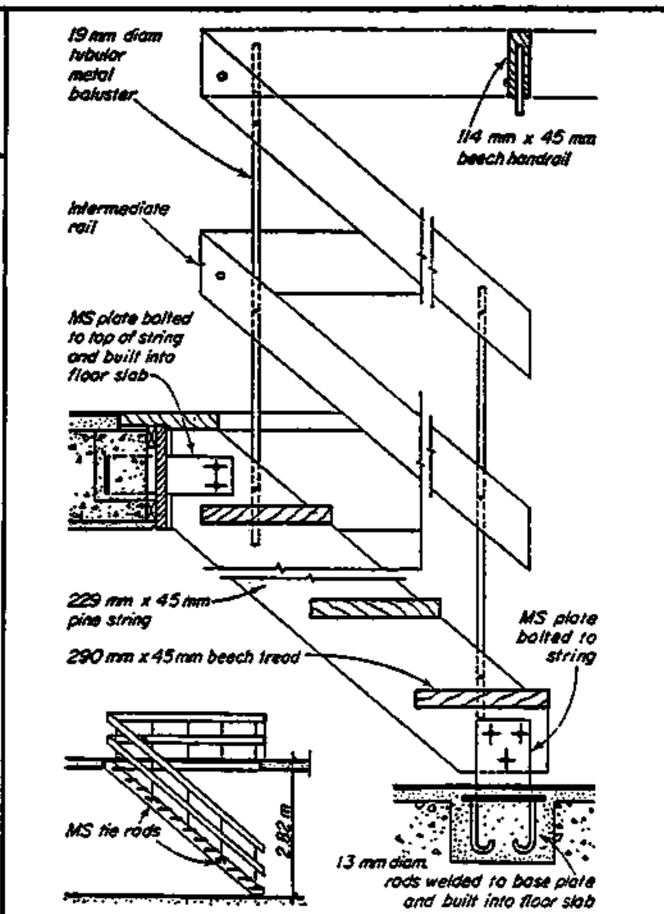

- With open-riser stairs no support is given to the tread by a riser. So the treads should be at least 38to44mm thick.
  The treads are generally of hardwood.
- In case no newels are seen in the stair, this necessiates a direct fixing of the strings to the floors (for example: M.S. plates to which the strings are bolted are cast in the concrete floors.
- Alternative methods of securing the top of an open-riser stair are by fixing the strings directly to the wall face or by fixing to the upper floor by means of a head piece dowelled to the tops of the strings.

DOG LEG STAIR

DOG-LEG STAIR

- The use of a single newel at the landing into which both outer strings are framed produces an elevation (the V-junction of strin gs) which gives rise to the name of the stair.
- Constructional details of the flights are identical with those already described for the straight flight stair - exept at certain points at the half - space landing and its newel.

  The latter is usually continued down to the lower floor for the sake of rigidity and fixed at the foot to the floor joist.

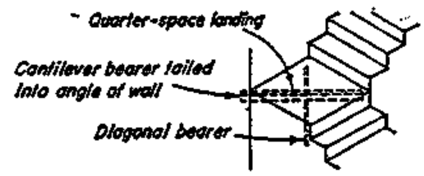

The strings bult against each other on an horizontal line, about 50 mm wide, outside the face of the newel.

The half-space landing, is formed of 100 mm x 50 mm joists supported by the trimmer at one end and by the stair case wall at the other.

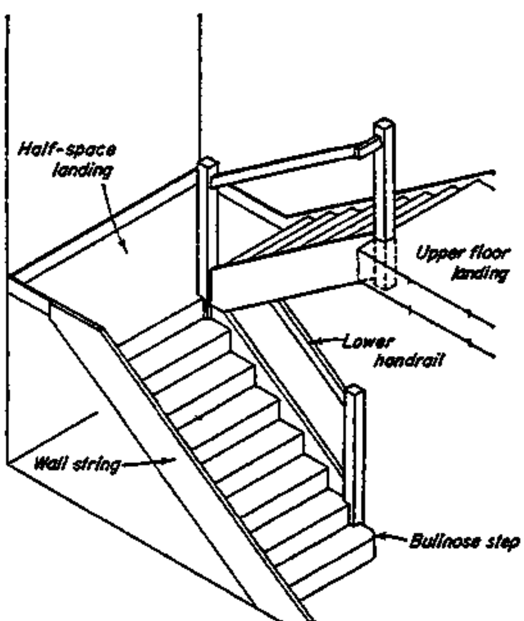

Dog-leg stair

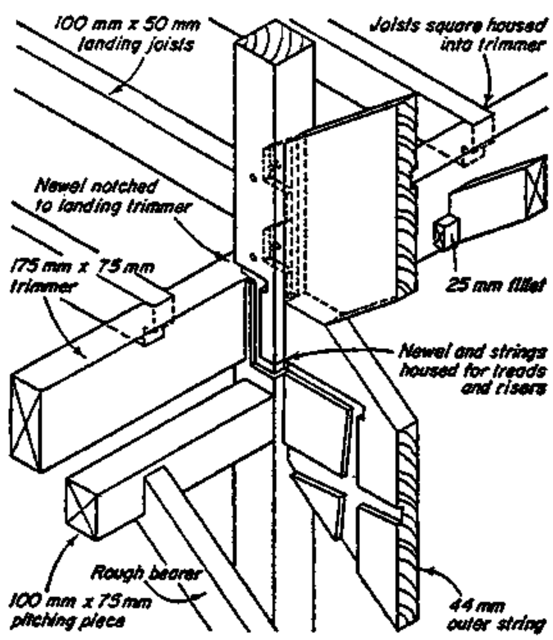

OPEN WELL STAIR

gives a better appearance than a dog-leg-stair and a continous handrail up to the landing newel.

All relevant details are similar to those described for the previous stairs.

If the landing is half-space, the landing newels may terminate just below the landing as on the upper floor. The section of landing exposed between the newels is finished with an apron lining.

If a very narrow well is adopted (say 75 to 100 mm), a single newel about 250 mm wide is preferable to avoid an extremly small space between a pair of newels and its accompanying problems at handrail and landing level.

If an intermediate flight is incorporated, quarter-space landings will be formed; in small domestic stairs then landing will support itself (provided the surrounding walls are capable).
In larger stairs it is necessary to provide support to the trimmers of the landings: most simply

by carring the landing newels down to the floor below

or:

the landing and the newel may be supported on cantilever construction.

OPEN WELL STAIR

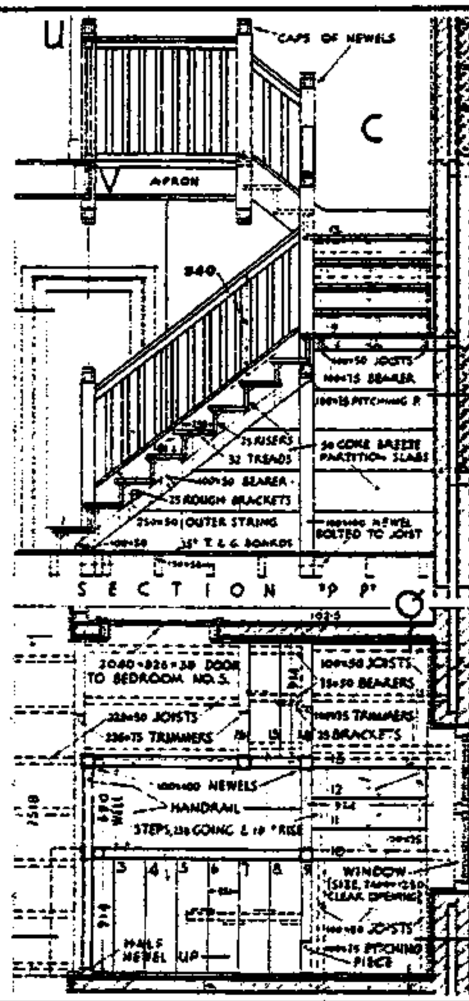

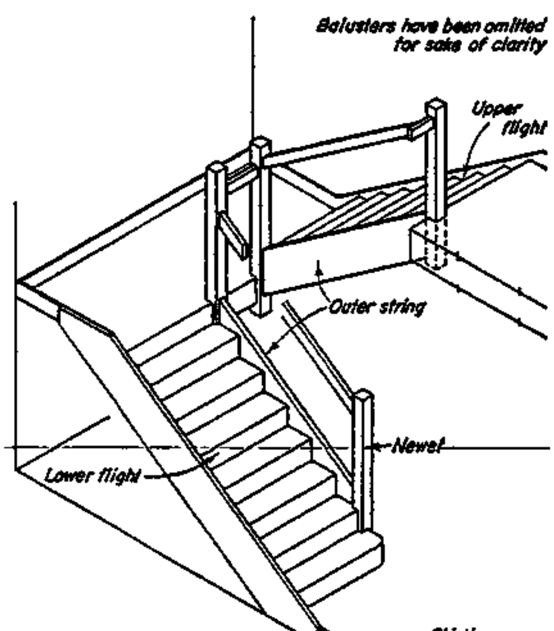

Open well stair

13.55 Metal Stairs
are used as
- escape stairs
- internal accomodation stairs
- external accomodation stairs.

- Most metal stairs are manufactured from mild steel and in straight flights with intermediate half space landings. Spiral stairs in steel are also produced but their use as an escape stair is limited by size and the number of persons likely to use the stairway in the event of a fire. Aluminium alloy stairs are also made and are used almost exclusively as internal accomodation stairs.
- All steel stairs have the common disadvantage of requiring regular maintenance in the form of painting as a protection against corrosion.
- Most metal stairs are supplied in a form which requires some site fabrication and this is usually carried out by the suppliers site erection staff. The main contractor having been supplied with the necessary data as to foundation pads, holding-down bolts, any special cast-in fixings and any pockets to be left in the structural members or floor slabs to enable this preparatory work to be completed before the stairs are ready to be fixed.

13.55 METAL STAIRS

- STEEL ESCAPE STAIRS

The treads of this type of stair are bolted to the strings and can be of a variety of types ranging from perforated cast iron to patterned steel treads with renewable non slip nosings.
Handrail balustrades or standards can be of steel square or tubular sections bolted to the upper surface of a channel string or to the side of a channel or steel plate string.

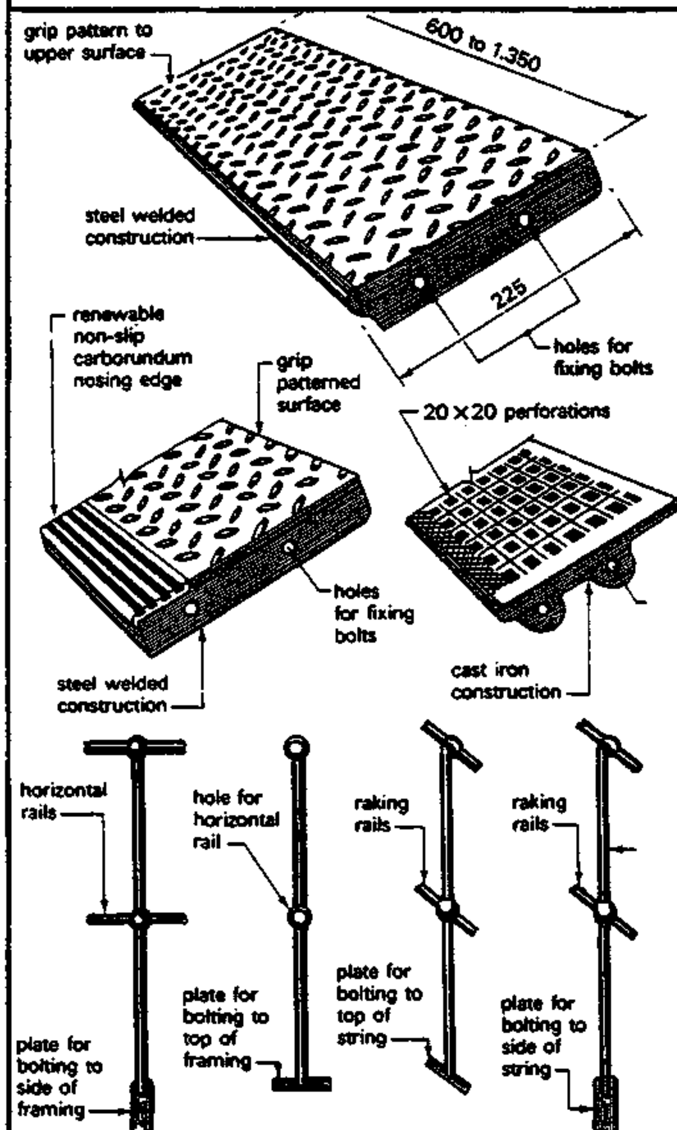

STEEL SPIRAL STAIRS

- Steel spiral stairs
are allowed as an internal or external means of escape stairs if they are not for more than 50 persons. The maximum total rise is 9,00 m and the minimum overall diameter is 1,50 m.

- Two basic forms are encountered:
  - a) with treads, which project from the central pole or tube and
  - b) those which have riser legs.

The usual plan format is to have 12 or 16 treads to complete one turn around the central core and terminating at floor level with a quarter circle landing or square landing.

The standards (like those used for precast concrete spiral stairs, pass through one tread and are secured on the underside of the tread below.

Handrails are continously and usually convex in cross section of polished metal painted metal or plastic covered.

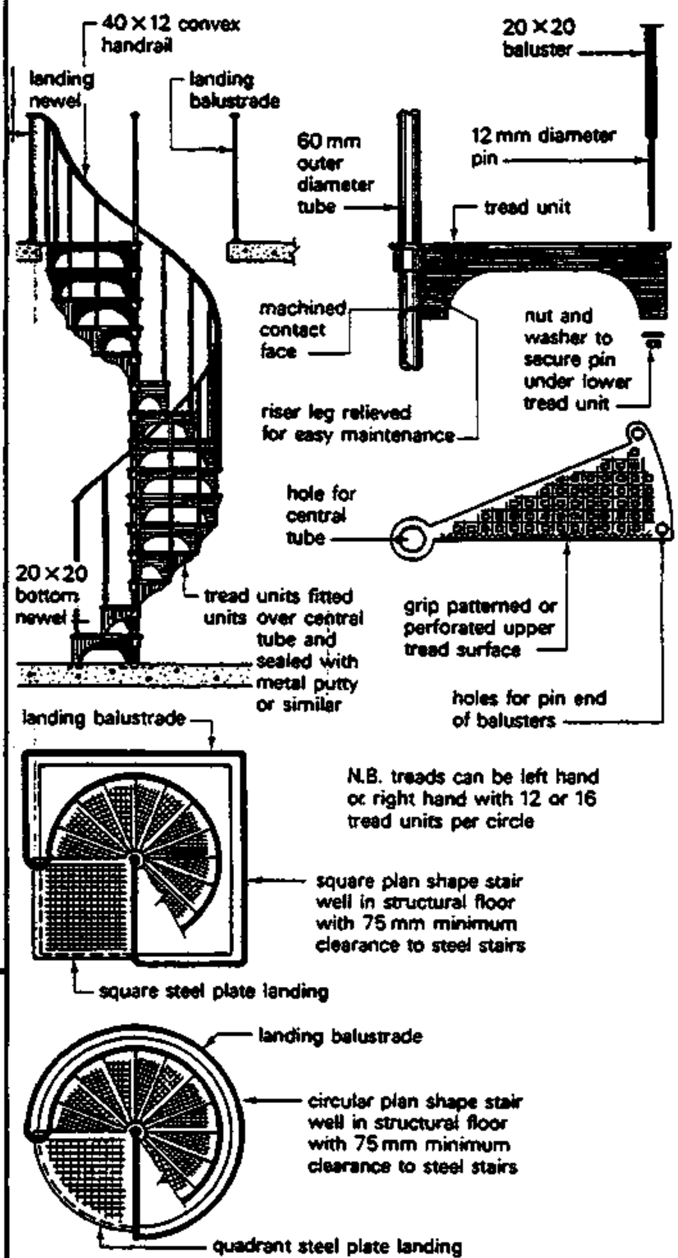

STRING BEAM STEEL STAIRS

- String beam steel stairs

used mainly to form accomodation stairs which need to be light and elegant in appearance. The strings can be of mild steel tubes, steel channels steel boxes or small universal beam sections fixed by brackets to the upper floor surfaces or landing edges to act as inclined beams. The treads, which can be hardwood timber, precast concrete or steel are supported by plate, angle or tube brackets welded to the tup of the string beam. Balustrading can be fixed through the ends of the treads or (alternatively) supported by brackets attached to the outer face of the string beam.

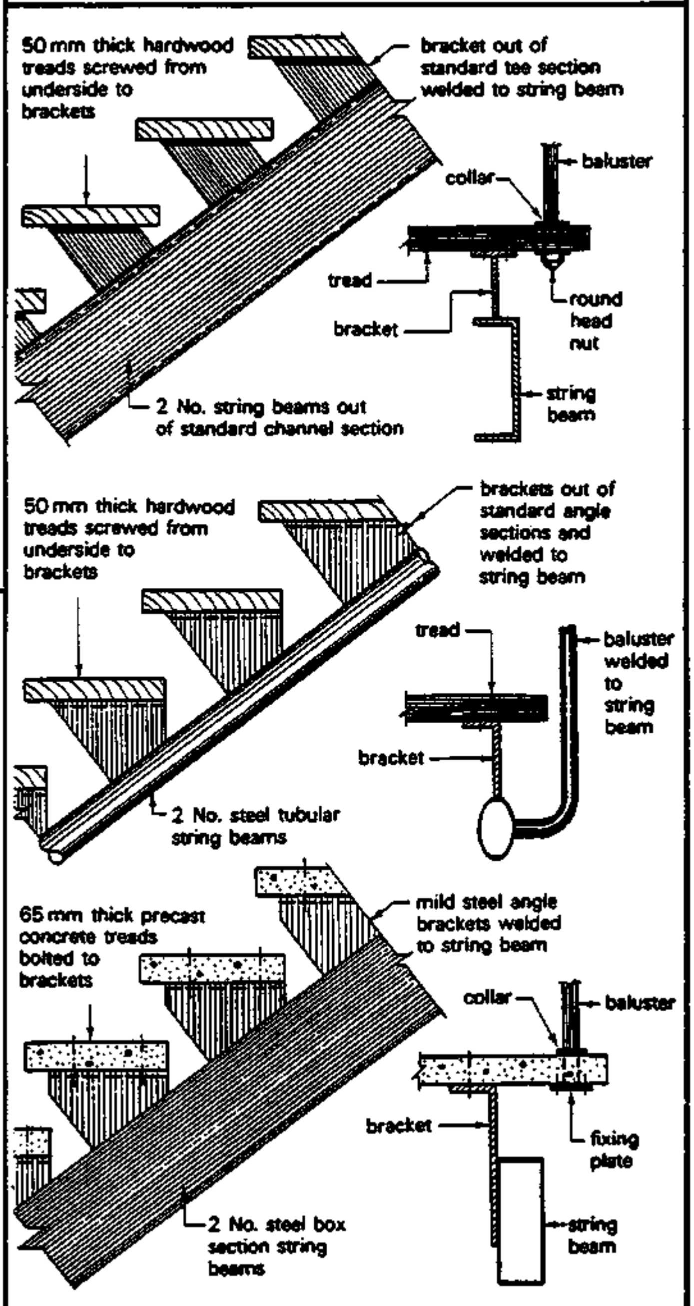

PRESSED STEEL STAIRS

- Pressed steel stairs

accomodation stairs made from light pressed metal such as mild steel.
Each step is usually pressed as one unit with the tread component recessed to receive a filling of concrete, granolithic, terrazzo, timber or any other suitable material.

The strings are very often in two pieces, consisting of a back plate to which the steps are fixed and a cover plate to form a box - section string.

The coverplate to be site-welded.
The complete strings are secured by brackets or built in to the floors or landings and provide the support for the balustrade. Stairs of this nature are generally purpose-made to the required layout and site assembled and fixed by a specialist sub-contructor.

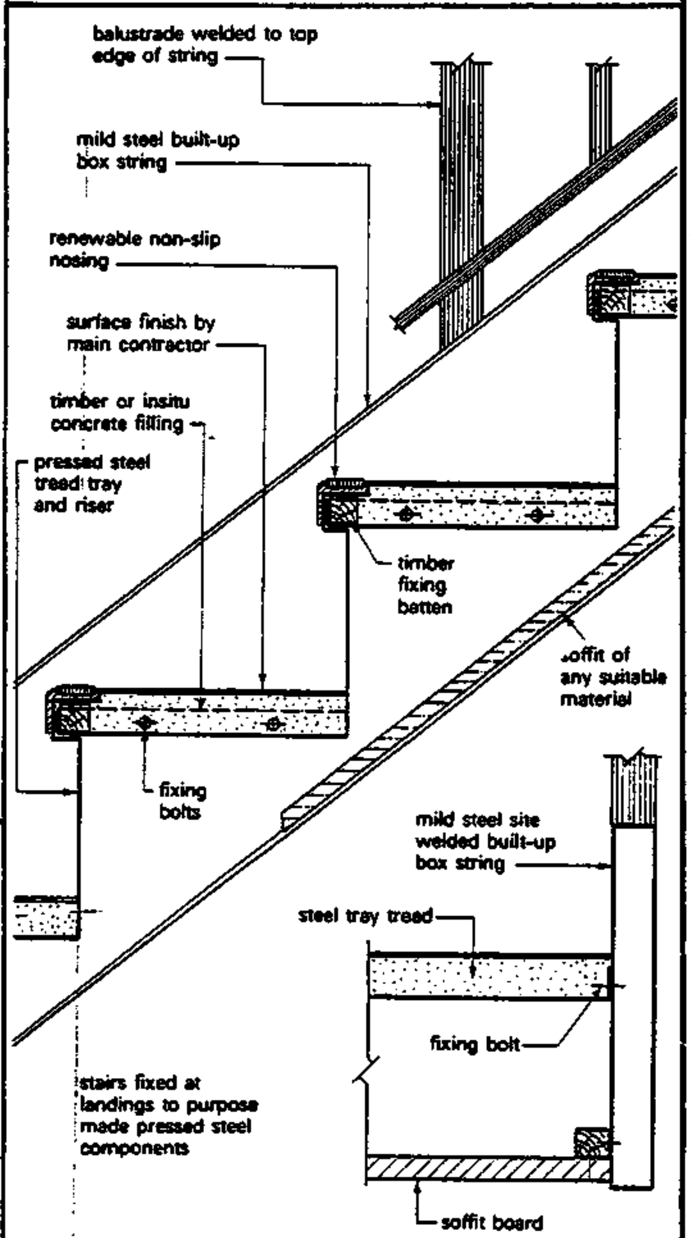

- <u>Aluminium alloy stairs</u>
are suitable for accomodation stairs in public buildings, offices and shops.
The treads have a non-slip nosing with a general tread covering of any suitable floor-finish-material. Format can be open or closed riser.
The two-part box strings support the balustrade and are connected to one another by small diameter tie rods which - in turn - support the tread units.

The flights are secured by screwing to purpose made base plates or brackets fixed to floors and landings or alternatively located in preformed pockets and grou ted in.

When the stairs are assembled they are very light and can usually be lifted and positioned by two men without the need for lifting gear. No decoration or maintenance is required.

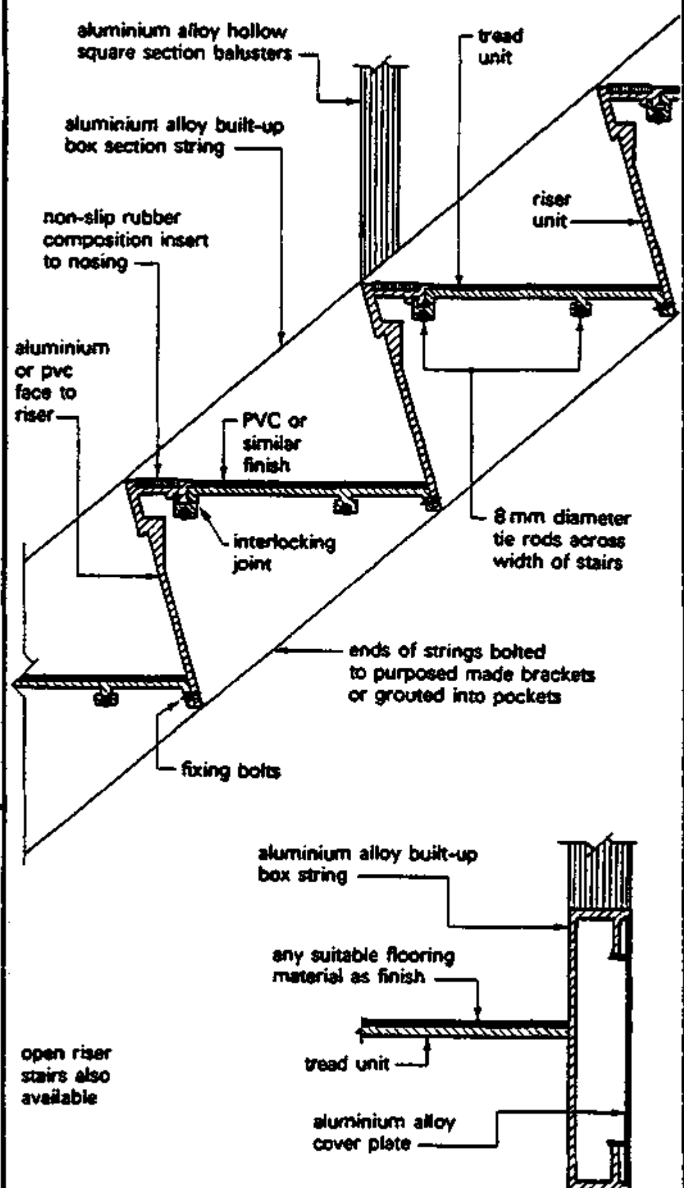

13.61
BALUSTRADES/HANDRAILS

Handrails

Continous handrails of non-combustible materials at a height of between 840 and 915mm above the pitch line (line of nosings) are required to all stairs and to both sides if the stairs width exceeds 1.06 m. The height above the floor to be between 1.07 and 1.09 m.

The capping can be of a combustable material such as plastic or timber provided that it is fixed to or over a non-combustible core.

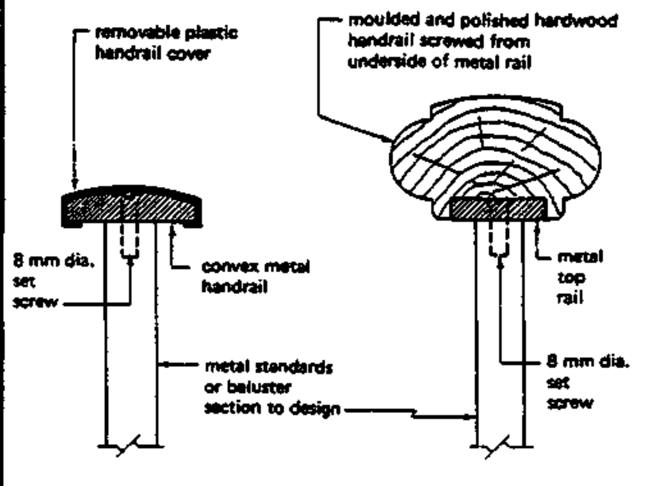

Typical handrails

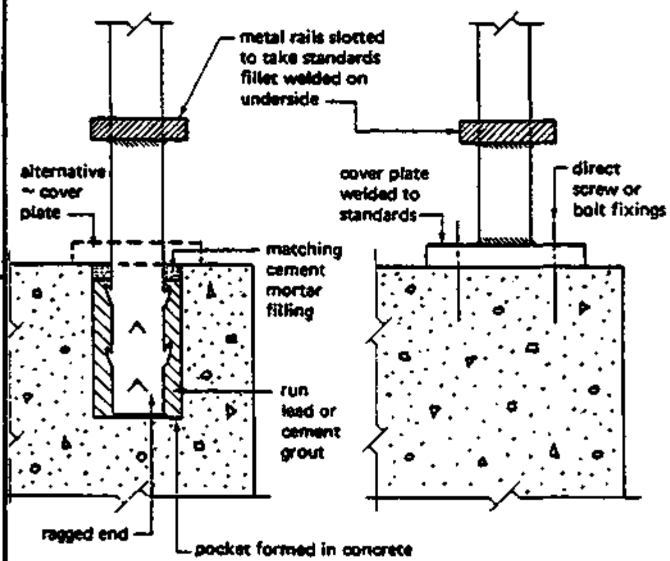

Typical fixing methods

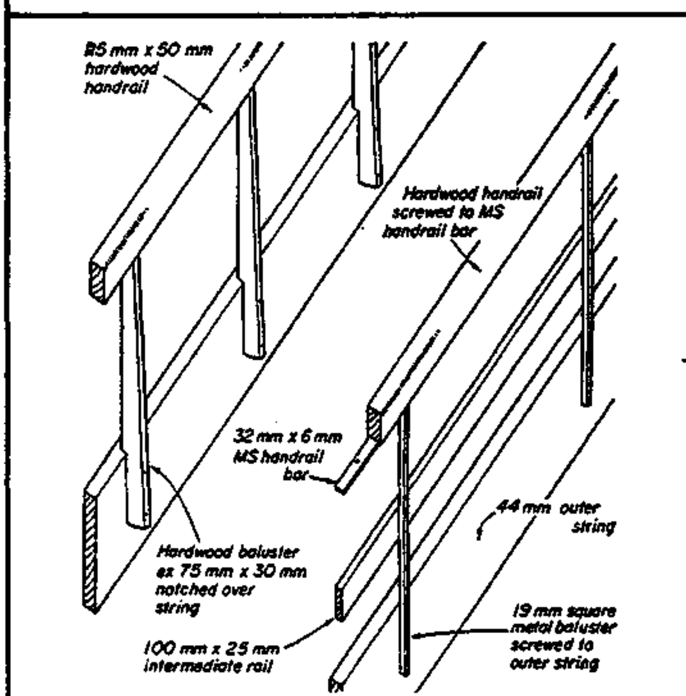

Handrail and string details. Max space is required at hip (handrail) level, but considerably less at foot level. Width at string level therefore reduced to allow more space for stairwell. Staggering of handrail and string also offers better structural fixing of standards to strings, best with handrails 80 mm (3.2 in) apart and space between strings 120 mm (4.7 in). Additional handrail for children, height approx 600 mm (2 ft). Less favourable string and handrail positions, with no space between strings , string above string and stringless r.c. stair without any space between flights

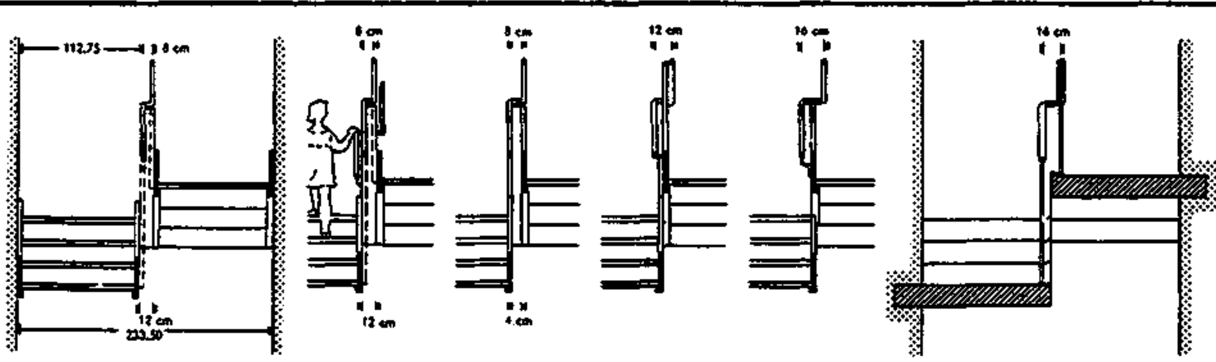

BALUSTRADES and HANDRAIL DETAILS :

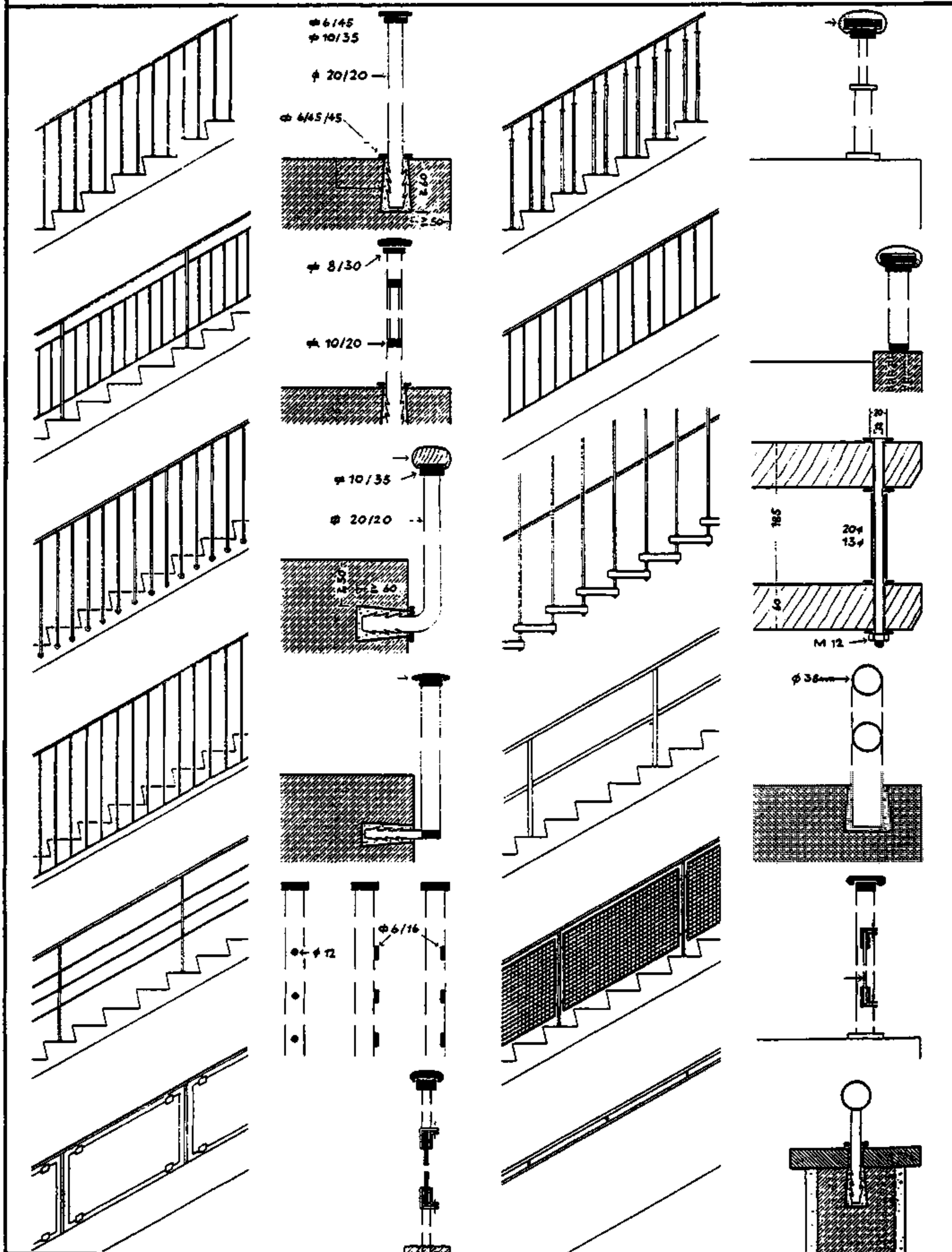

13. STAIRS compiled : D.VOLKE DEC. '82	MISCELLANEOUS	BUILDING CONSTR. LECTURE CET 7031/1 13.6 43
TCA TECHNICAL COLLEGE ARUSHA CHUO CHA UFUNDI ARUSHA	CIVIL ENGINEER. DEPARTMENT	43

'SAMBA' STAIR; LADDERS; DISAPPEAR. STAIRS; RAMPS

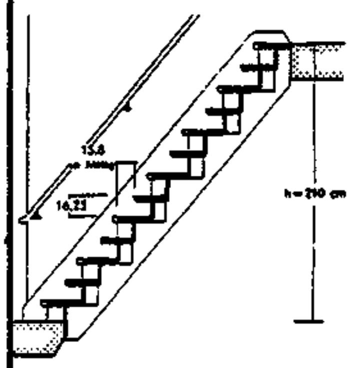

'Samba' stair from timber, section through centre

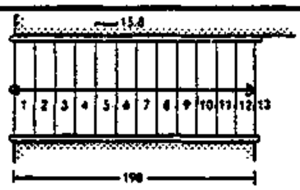

Normal stair (treads too short)

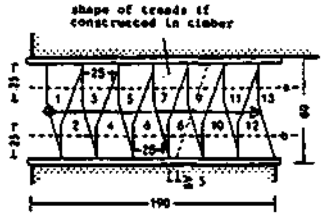

Plan. Tread width at line a and b ≧ 200 mm (8 in)

'Samba' stair

Example. Storey height 2.25 m (7 ft 6 in) = 12 risers = 187.5 mm (7.5 in) per rise; if constructed as a normal stair, a tread of 136 mm (5.4 in) is too small. Therefore steps are curved in such a way that on line a and b tread becomes 250 mm (10 in), fulfilling above requirement: 2 x 187.5 mm (7.5 in) + 1 x 250 mm (10 in) = 625 mm (25 in).

DISAPPEARING STAIRS

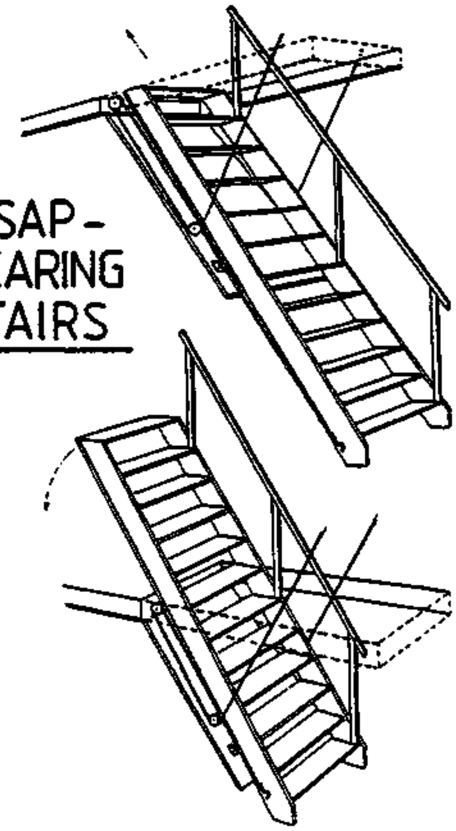

CONCEALED CATLADDER

Storey height from F.F.L. to underside of ceiling	Length of opening (width accord-ingly)	Required swivel radius in attic
3,00	1,45	2,30
3,00	1,30	2,45
3,00	1,15	2,60
3,00	1,00	2,75
3,00	0,85	2,90
2,70	1,45	1,95
2,70	1,30	2,10
2,70	1,15	2,25
2,70	1,00	2,40
2,70	0,85	2,55
2,40	1,45	1,65
2,40	1,30	1,80
2,40	1,15	1,95
2,40	1,00	2,10
2,40	0,85	2,25
2,10	1,45	1,30
2,10	1,30	1,45
2,10	1,15	1,60
2,10	1,00	1,75
2,10	0,85	1,90

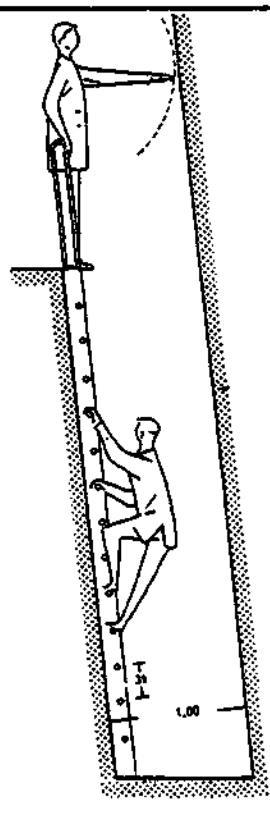

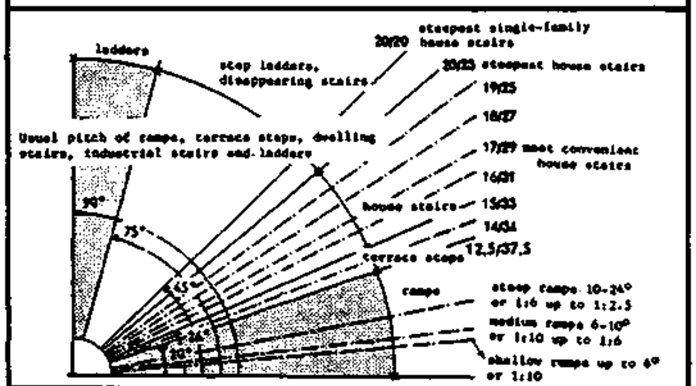

ramps are divided according to gradient into:

1. Shallow ramps which do not require special non-slip treatment
2. Medium gradient with battens or low rise steps, or at least a rugged non-slip surface
3. Steep ramps requiring battens or low rise steps. Batten distances should be uniform and should conform to normal stride.

Steep stairs at an angle of 38—45° should be used only for short flights and little traffic. The sum of the going + twice its rise should be ≥ 571 mm (22.5 in), ≤ 630 mm (25 in).

Loft ladders, etc, have angle of 45—55°.

However, if user requirements stipulate a stair-like access (e.g. where loads are carried and available length is too short for flight of normal stairs), then stair with staggered steps, so-called Samba stair, may be designed. Risers for this type of stair should be as few as possible: riser ≤ 200 mm (8 in). Here 'the sum of the going + twice its rise = 630 mm (25 in)' is achieved by shaping the treads; going is measured (staggered) at axes a and b, of right and left foot.

Movable ladders have angles of 65—80°. There are various types including extension ladders.

Fixed ladders have angles of 80°+ and should extend ≥ 750 mm (2 ft 6 in) over platform to be reached if no other precautionary measure against accident is taken. Rung-distance for fixed ladders, 295—315 mm (11.5—12.5 in).

Escalators (1) are required for continuous transport of crowds (requirements of width and distance for means of escape do not take escalators into account). Automatic control by push buttons at top and bottom or through photo-electric cells reduces running times by 40–50%.

Escalators should be evenly distributed throughout all floors, where necessary varying width or speed. To cope with peak traffic a smaller number of escalators at speed of 1 m/sec (3 ft/sec) which move at off-peak times at 0.65 m/sec (2 ft/sec) more economical than larger number of slow moving escalators. However, in UK, max speed 0.75 m/sec (→ BS 2655).

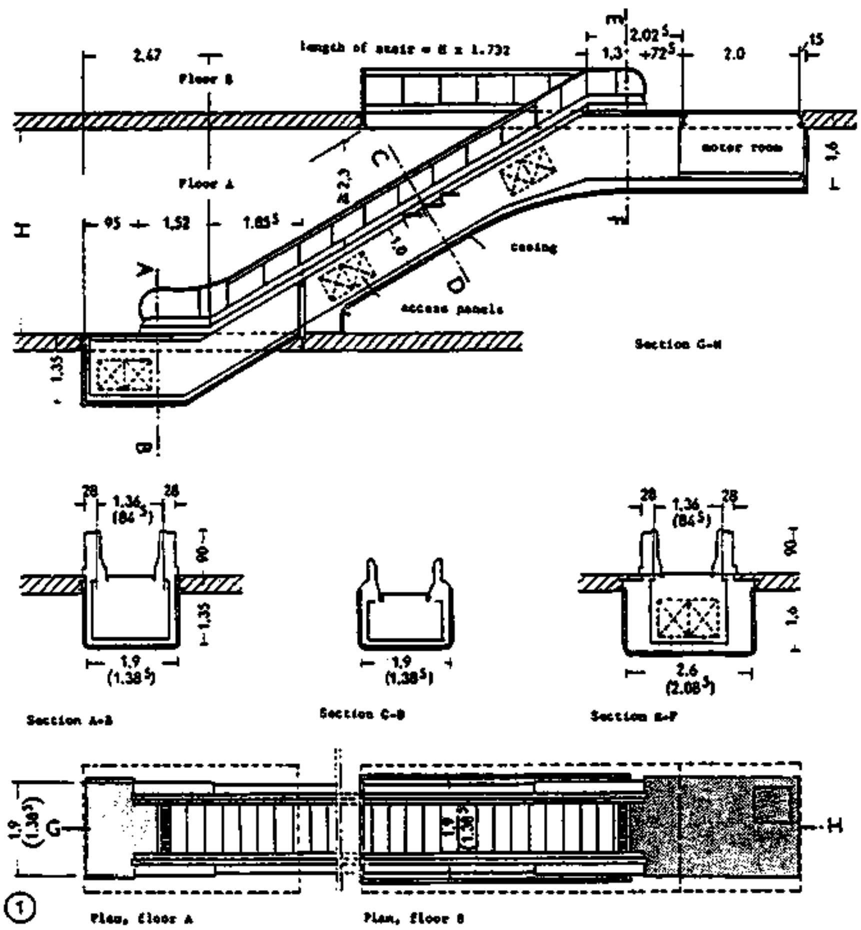

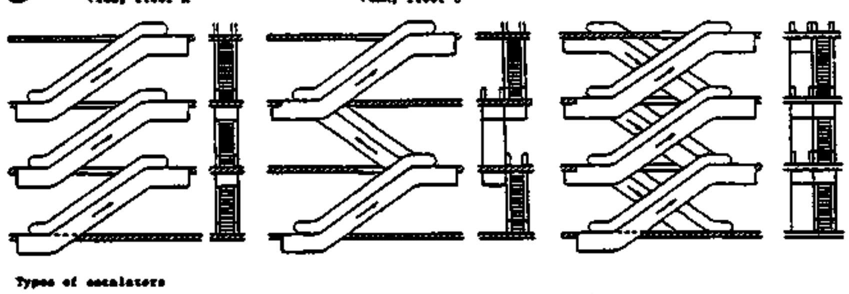

Types of escalators
(2) Superimposed (3) Crossover (4) Double crossover

Stringent requirements (function and security); 30° angle best, going 0.40 m (1 ft 4 in), width of stairs 0.60 m (2 ft) to ≤ 1.00 m (3 ft 4 in), usual 0.80 m (2 ft 8 in). Escalators of 30° angle and 1.00 m stair width permit easy overtaking.

Conveyor belt speed: international about 0.50 m/sec (1 ft 8 in/sec). At change-over from fixed floor to escalator a handrail projection ≥ 0.80 m (2 ft 8 in) is required.

Access and exit with min. 2 horizontal goings, but escalators with larger height dimensions or greater speed ≥ 0.50 m/sec (1 ft 8 in/sec) min 3 horizontal exit goings necessary.

Max capacity/h from steps area and speed

Capacity $M = \frac{Q_1 \times V}{T} \times 3600$

Q_1 = persons/step
T = going depth (m)
v = conveyor speed (m/sec)

Output only 75–80% of M, as steps not used to capacity.

Control: fully automatic through time clock and programme, or intermittent through photo-electric cells, or contact mats.

With working height of ≥ 6.0 m (20 ft) a centre support is normally necessary.

speed	Time per person	Persons/hr transported: 1 person width	2 person width
0.5 m/sec	18 sec	4000	8000
0.9 m/sec	10 sec	7200	14400

Energy consumption: 4 000 person/h: 8 hp AC
8 000 person/h: 15 AC

Length in plan
With 30° escalator: 1.732 x storey height.
With 35° escalator: 1.428 x storey height.
Example: storey height 4.5 m (15 ft), angle 30°. Length in plan = 1.732 x 4.5 = 7.794 m (1.732 x 15 = 26 ft); adding for landings top and bottom, total length approx 9 m (30 ft), allowing about 20 persons to stand in a row.

•REPETITION••exercises••REPETITION•••

Try to answer the following questions and practice sketching where ever necessary and possible.

1) Introduction

a) Explain the term STAIR and list suitable materials, which can be used for the construction of stairs.

2) Definition of Terms

a) Define the following Terms:

- Step
- Tread
- Rise of a step
- Riser
- Racking Riser
- Nosing
- Line of Nosings
- Going
- Fliers
- Tapered Steps
- Winders
- Dancing Steps
- Flight
- Landing
- Width
- Pitch or Slope
- Walking line
- Headroom
- Balustrade
- String or Stringer
- Staircase

3) Types of Stairs

a) How are Stairs classified? Use sketches for illustration!

4) Design of Stairs

a) What are the main factors in the design of Stairs?
b) Write notes on the RISE-TREAD-PROPORTION.
c) Calculate a Stair with a rise of 17-19 cm and defference of floor levels - h = 3.00 m, using the I. PACE-RULE
   II. SAFETY - RULE
   III. COMF ORT-RULE

5) Construction of Stairs

a) Explain briefly the construction of BRICK STAIRS. Use sketches for illustration!

b) Explain briefly the construction of STONE STAIRS. Use sketches for illustration!

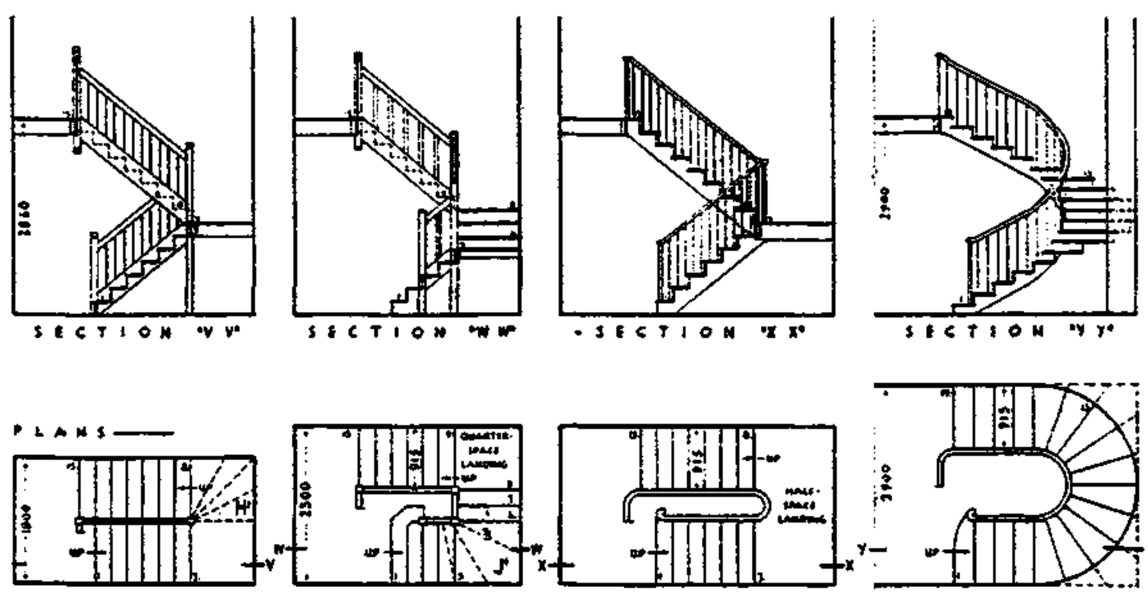

●REPETITION●●exercises●○○○

c) Explain briefly the construction of 'IN-SITU' CAST R.C. STAIRS and give structural details of:
- single flight concrete stairs
- two-flight concrete stairs with half-space landings
- string beam concrete stairs
- cranked slab concrete stairs
- cantilever concrete stairs
- spiral concrete stairs

Use sketches for illustration!

d) Explain briefly the construction of PRECAST CONCRETE STAIRS and give structural details of
- straight flight p.c. stairs
- cranked slab p.c. stairs
- p.c. open riser stairs
- p.c. spiral stairs

Use sketches for illustration!

e) Explain briefly the construction of TIMBER STAIRS and give structural details of
- straight flight timber stairs
- open-riser or ladder timber stairs
- dog-leg timber stairs
- open well timber stairs

Use sketches for illustration!

f) Explain briefly the construction of METAL STAIRS and give structural details of
- steel escape stairs
- steel spiral stairs
- string beam steel stairs
- pressed steel stairs

Use sketches for illustration!

6) <u>Miscellaneous</u>

a) Describe - by using sketches - different types of balustrades and handrail details.

b) Explain the terms:
- 'samba' stair
- disappearing stair
- ladder
- ramp

by using sketches for illustration!

c) What do you know about ESCALATORS?

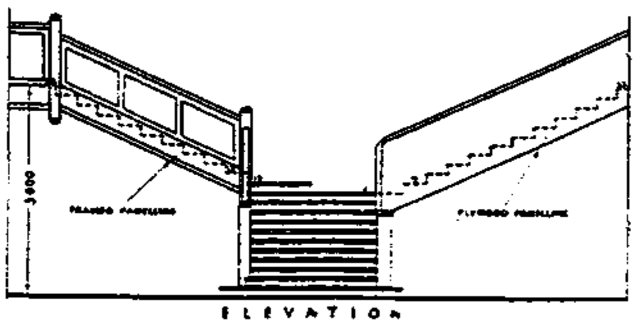

ELEVATION

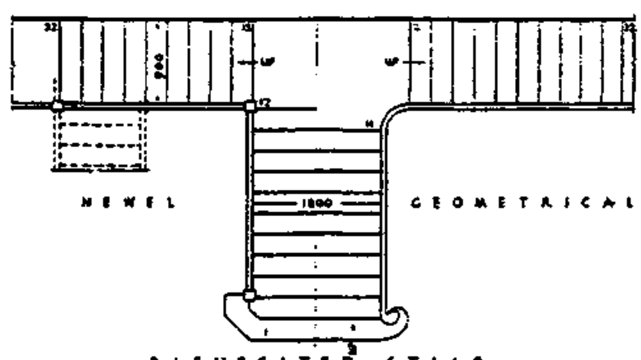

BIFURCATED STAIR

14. DOORS & WINDOWS

CONTENTS:

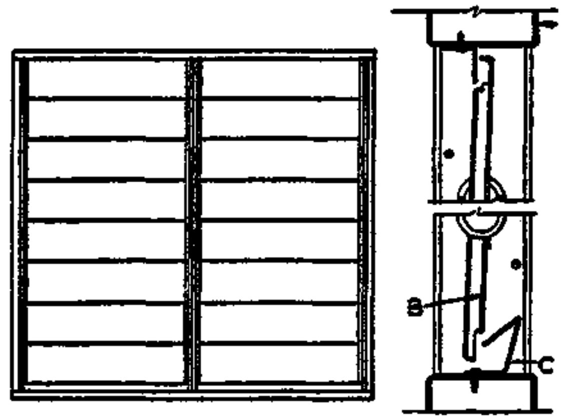

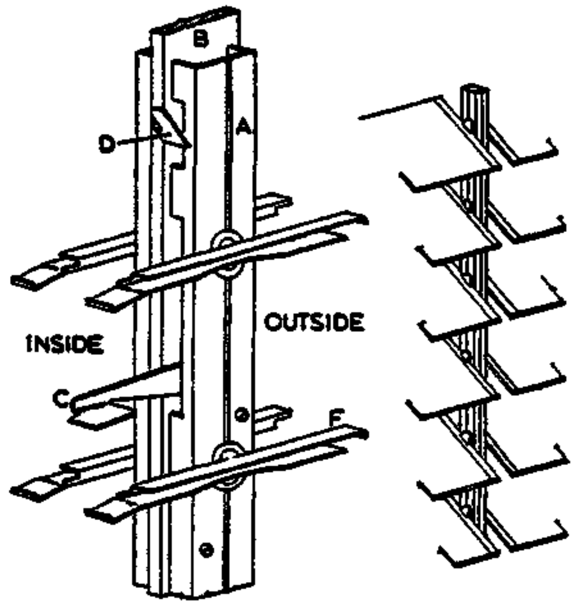

REFERENCES:

1. R.L. Fullerton "Building Construction in warm Climates" Volume 1,2,3
2. R. Chudley "CONSTRUCTION TECHNOLOGY" Volume 1,2,4
3. E. Neufert "Architect's Data" Edition 1978
4. R. Barry "The Construction of Buildings" Vol. I + II

TCA TECHNICAL COLLEGE ARUSHA
CHUO CHA UFUNDI ARUSHA
CIVIL ENGINEER.
DEPARTMENT

14.1 DOORS

14.1 <u>DOORS</u>

- A door is a screen used to seal an opening into a building or between rooms within a building.
- Doors can be made from
  - wood
  - glass
  - metal
  - plastic
  - felexible rubber
  - or any combination of the above
- They can be designed to
  - swing (side-hung)
  - slide
  - fold (slide and fold)
  - roll
  - shutter
  - or pivot
- They can range in size from tiny cupboard doors to the huge sliding-folding doors of aircraft hangers.
- All doors may be classified by their
  - Position in a building
  - Function
  - or method of Construction.

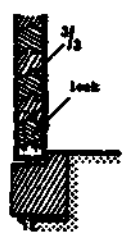

American solid-core door with metal channel profile

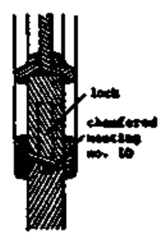

Two-leaved framed door with beaded panels

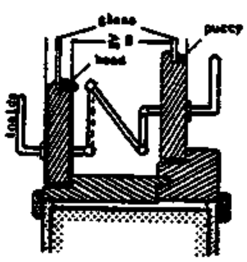

Two coupled doors

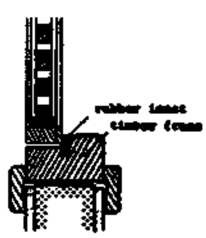

Skeleton-core plywood door

DOORS

Positioning

Correct positioning of doors important for convenient use of rooms, → (1)-(8). For common descriptions of doors in plan, → (9)-(16).

American balanced door, → (17)-(19), requires minimum effort to open and is suitable for passage doors in corridors, draught lobbies, etc.

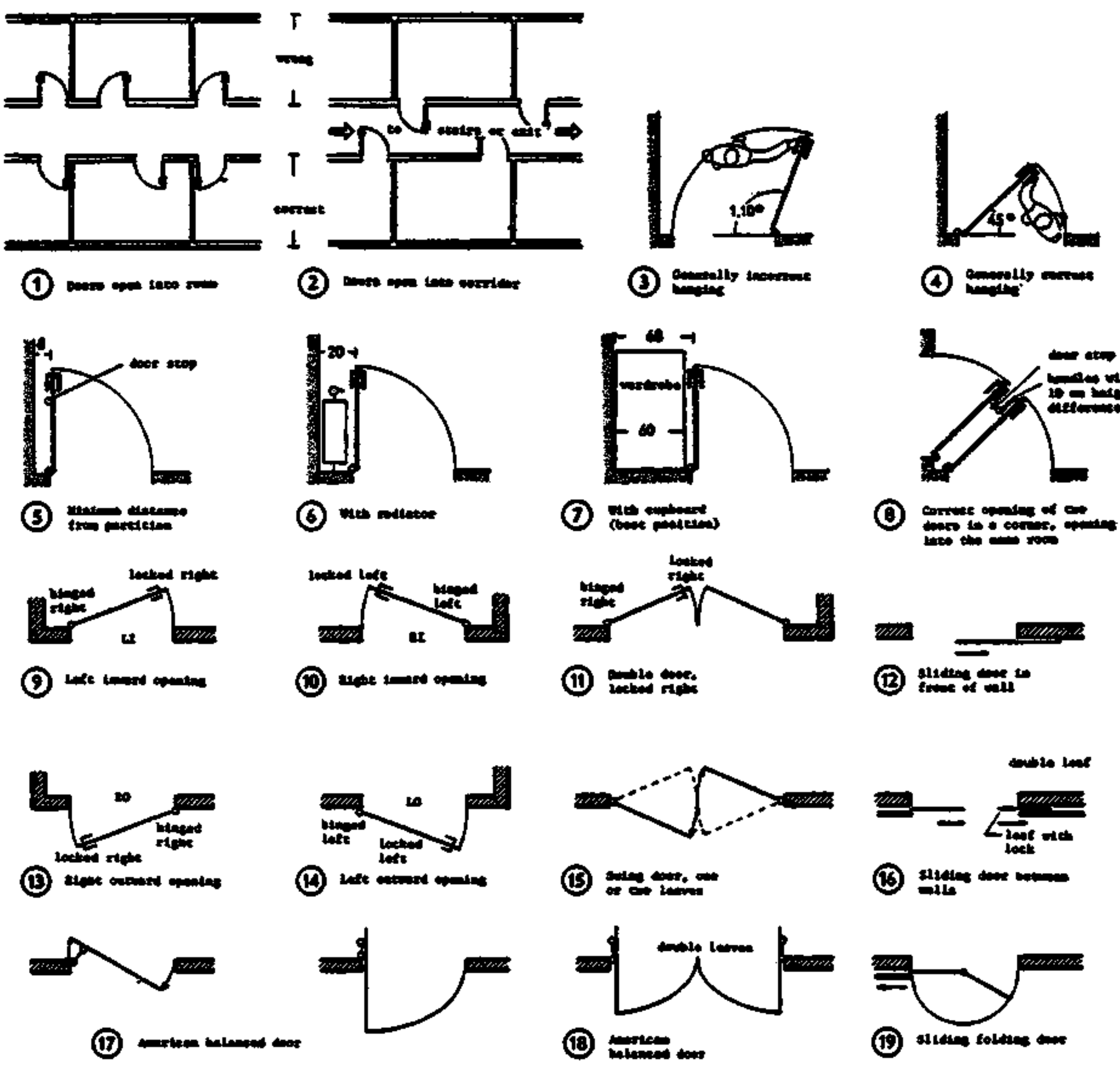

(1) Doors open into room
(2) Doors open into corridor
(3) Generally incorrect hanging
(4) Generally correct hanging
(5) Minimum distance from partition
(6) With radiator
(7) With cupboard (best position)
(8) Correct opening of two doors in a corner, opening into the same room
(9) Left inward opening
(10) Right inward opening
(11) Double door, locked right
(12) Sliding door in front of wall
(13) Right outward opening
(14) Left outward opening
(15) Swing door, one or two leaves
(16) Sliding door between walls
(17) American balanced door
(18) American balanced door
(19) Sliding folding door

EXTERNAL DOORS

14.1.1 External doors

are built
. to close the access
. to provide security

- They need to be weather resistant, provided by:
  - thickness
  - stability and durability of the construction
  - materials used together with protective coatings of paint or polish
- They should be constructed to maintain the insulation properties of the external walls.
- Standard sizes for external timber doors:
  1981 mm x 762 or 838 mm
  (high) (wide)
  and 45 mm thick
  (which is a metric conversion of the old Imperial door size)

Metric doors are produced so that, together with the door frames, they fit into a modular coordinated opening size and are usually supplied as door sets with the door already attached or hung to/in the frame.

INTERNAL DOORS

14.1.2 Internal doors

- As with external doors the aim of the design should be to maintain the properties of the wall in which they are housed.
- Generally: internal doors are thinner, standard sizes are similar to external doors, but with a wider range of width to cater for narrow cupboard openings.

PURPOSE MADE DOORS

14.1.3 Purpose made doors.

- The design and construction of these doors is usually based on B.S. 459 for standard doors, but are made to non-standard sizes, shapes or designs.
- They are used mainly for
  . front elevation doors
  . in buildings such as
    banks
    civil buildings
    shops
    theatres
    hotels
    to beautify the external facade or internal decore.

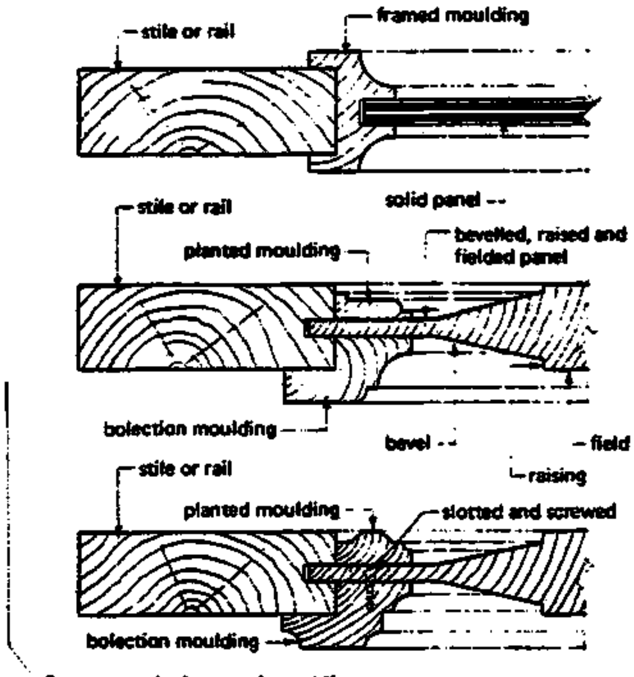

Purpose made doors and mouldings

METHODS OF CONSTRUCTION

14.1.4 Methods of Construction.

The B.S. for wood doors is divided into four parts, each being a different method of construction:

B.S. 459 Part 1:
Panelled and glazed wood doors
Part 2:
Flush doors
Part 3:
Fire-check doors
Part 4:
Match bearded doors.

Standard doors are used extensively since they are
- mass produced to known requirements
- readily available from stock
- and cheaper than purpose made doors.

DOOR TERMINOLOGY

14.1.4.1 Door terminology

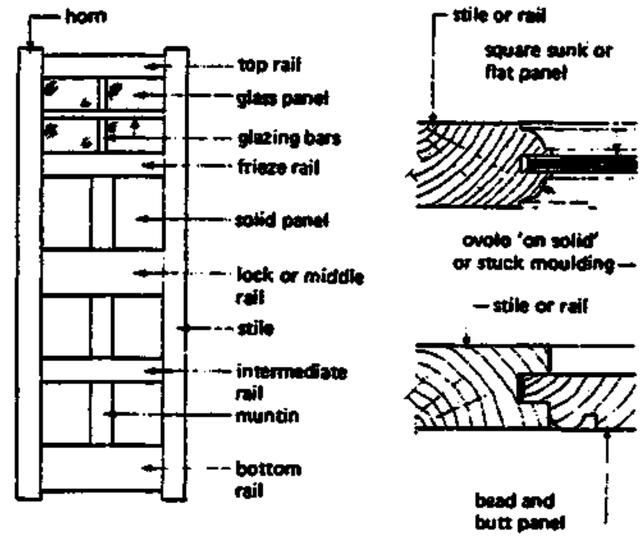

PANELLED & GLAZED DOORS

14.1.4.2 Panelled and glazed wood doors

- The wide variety of types is based upon the one/two/three/ or four panel formate.
- They are constructed of timber which should be in accordance with BS 1186 with plywood or class panels.
- The joints used in framing the doors can be a dowelled joint or a mortice and tenon joint. (or double tenon joint)
  - The dowelled joint is considered superior to the mortice and tenon joint, and is cheaper when used in the mass production of standard doors. Bottom and lock rails have 3 dowels, top rails have two. Intermediate rails have a single one.
  - The plywood panels are framed into grooves with closely fitting sides, with a movement allowance within the depth of the groove of 2 mm.

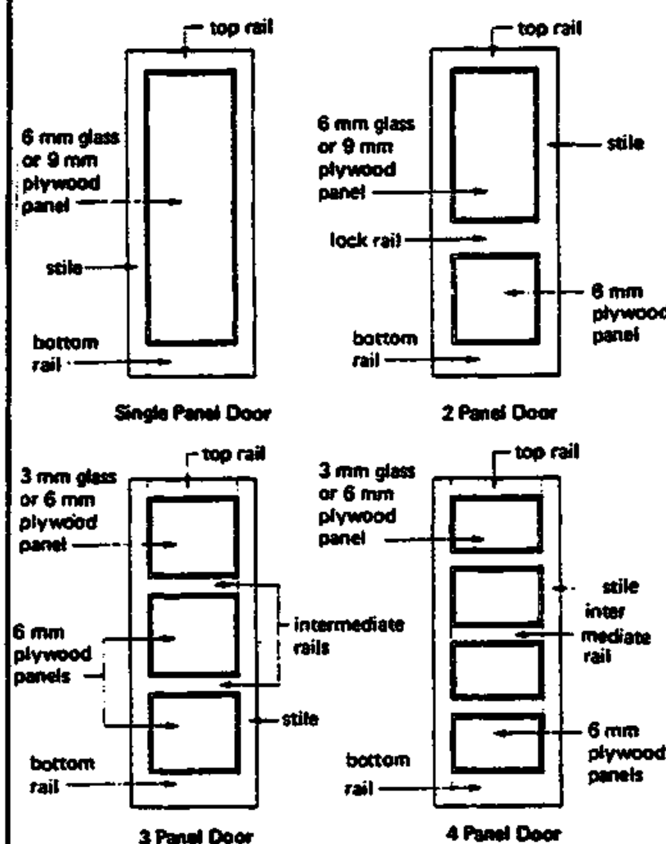

PANELLED&.GLAZED DOORS

- The mouldings at the rail intersections are scribed, where as the loose glazing beads are mitred.
- Weatherboards for use on external doors can be supplied to fit onto the bottom rail of the door which can also be rebated to close over a water bar.

Terms :(Mortice and tenon)joints:

- Haunch
- Mortice: The top and bottom of the mortices are tapered in towards the rails, in order to give space to drive in small wood wedges when tenons are fitted.

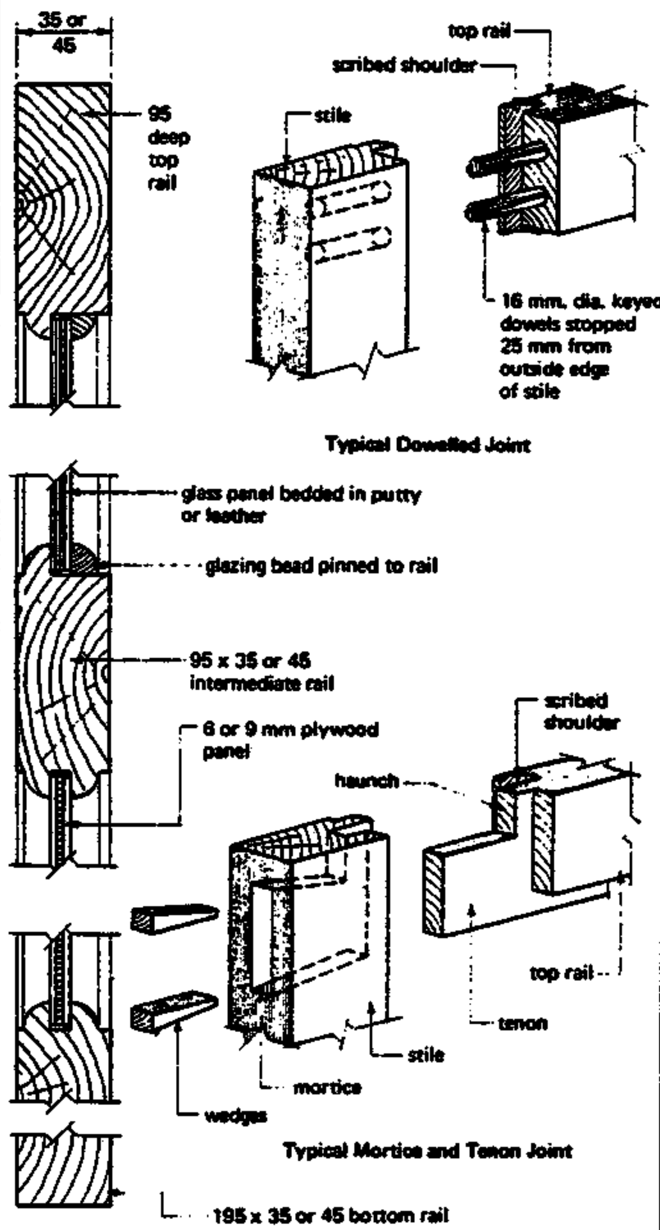

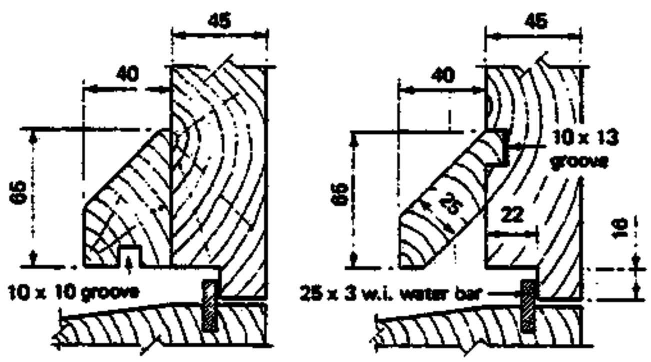

Standard Weatherboard

Non-standard Weatherboard

FLUSH DOORS

14.1.4.3 Flush doors

- Is very popular (with both the designer and the occupier)- it has a plain face which is easy to clean and to paint and is also free of the mouldings which collect dust.
- Flush doors can be faced with
  - hardboard
  - plywood or a
  - plastic laminate

14. DOORS & WINDOWS	DOORS	BUILDING CONSTR.
compiled : D.VOLKE		—LECTURE—
JAN. '83		CET 8031/114.1o6
TCA TECHNICAL COLLEGE ARUSHA CHUO CHA UFUNDI ARUSHA	CIVIL ENGINEER. DEPARTMENT	6

FLUSH DOORS

and by using a thin sheet veneer of good quality timber the appearance of high class joinery can be created.

- B.S. specifies the requirements for flush doors but leaves the method of construction to the manufacturer.

therefore: the forms of construction are many and vary, but basically: they can be considered as

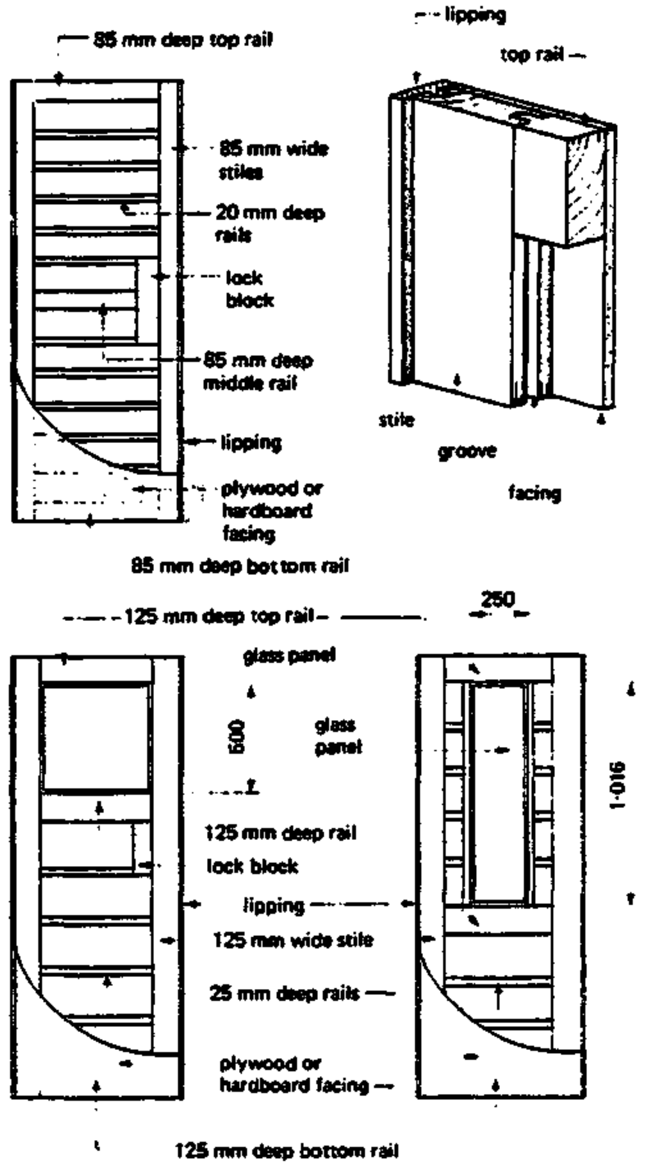

Skeleton core flush doors

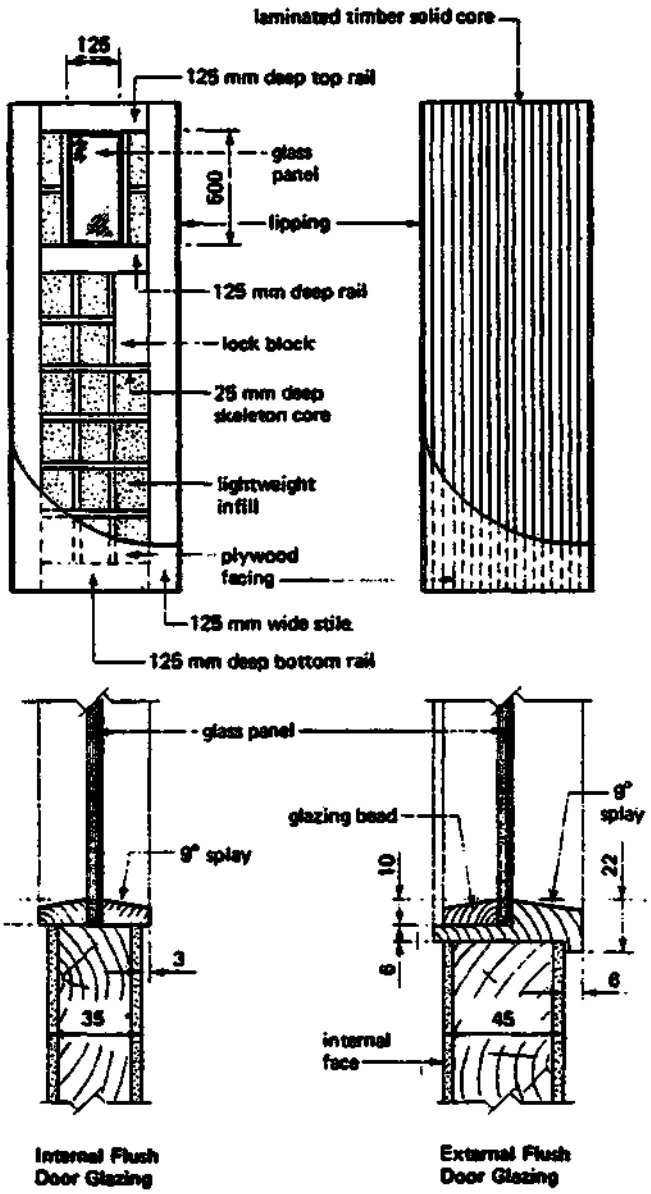

Solid core doors

-a- skeleton core doors or
-b- solid core doors.

-a- consists of an outer frame with small section intermediate members over which is fixed the facing material. The facing has a tendency to deflect between the core members and this can be very noticeable on the surface especially if the facing is coated with gloss paint.

-b- solid doors of faced block or laminated board are available for
 . internal and
 . external
use.
Another method of construction is to infill the voids (created by a skeleton core) with a light weight material such as foamed plastic which will give support to the facings but will not add much to the weight at the door.

FLUSH DOORS

- The facings can be damaged easyly at the edges, therefore a lipping of solid material should be fixed to at least the vertical edges (good class doors have lippings on all four edges).
- Small glased observation panels can be incorporated in flush doors when the glass panel is secured by loose fixing beads.

FIRE-CHECK FLUSH DOORS

14.1.4.4 Fire-check flush doors

- Provide an effective barrier to the passage of fire for the time designated by their type - but, to achieve this they must be used in conjunction with the correct frame.

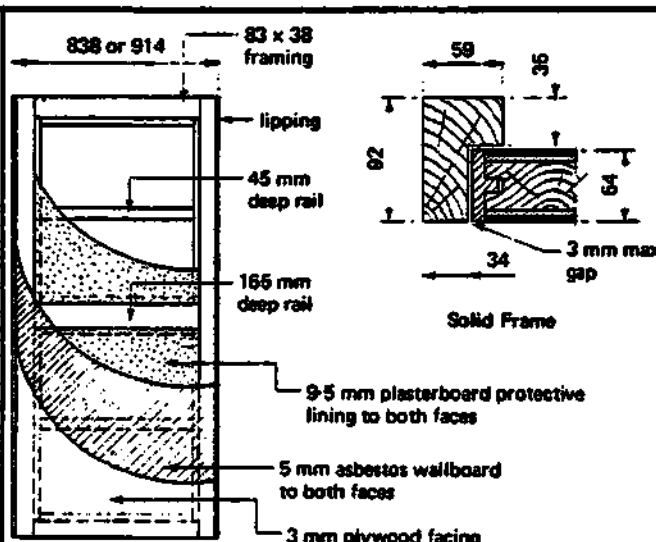

One Hour Type Fire-check Door and Frame

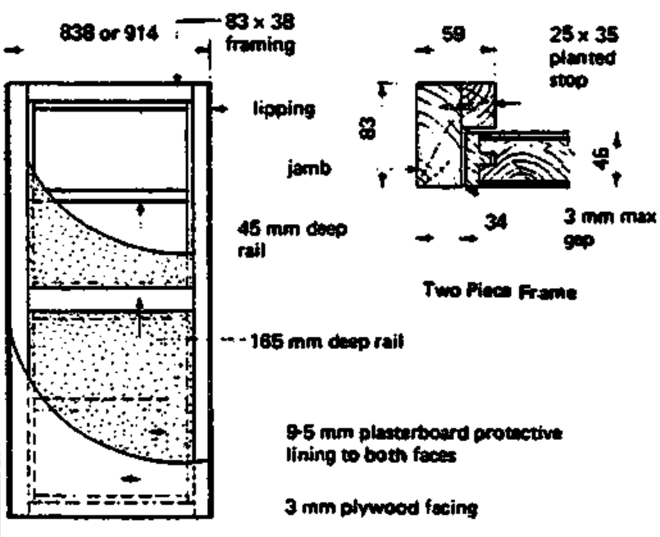

Half-hour Type Fire-check Door and Frame

- Two types are mentioned in BS 459:
 . half-hour resistance
 . one -hour resistance
- This resistance is obtained by placing beneath the ply wood facing a suitably protective lining material (or materials).

Half-hour types are hung using one pair of hinges

One-Hour types require 1 1/2 pairs of hinges.

MATCHBOARDED DOORS

14.1.4.5 Matchboarded doors

- These doors can be used as
  - external and
  - internal doors.
- There are 2 formes of standard doors:
  - ledged and braced or
  - framed, ledged and braced doors.

  (The latter is the stronger and more attractive version)
- The face is made from tongue and grooved boarding which has edge chamfers on one or both faces. - these form a Vee-joint between the boards.
- 3 horizontal members ('ledges') clamp the boards together - and in this form a non-standard door has been made, called: ledged and battened.
- It is simple and cheap to construct, but it can be easily pulled out of square - the only resistance is that of nails, holding the boards to the ledges.
- The use of that type is limited to buildings such as
  - sheds
  - outhouses etc.
  - In the standard door:
    - Braces are added to resist the tendency to drop out of square.
    - The braces are fixed between the ledges so that they are parallel to one another and slope downwards towards the hanging edge.
  - In the second standard type a mortice and tenoned frame surrounds the match boarded panel giving the door added strength.
  - If wide doors of this form are required the angle of the braces becomes too low to be value as an effective restraint and the brace must therefore be framed as a diagonal between the top and bottom rails. Wide doors of this design are not covered by B.S. but are often used in pairs as garage doors or as wide entrance doors to workshops or similar buildings.

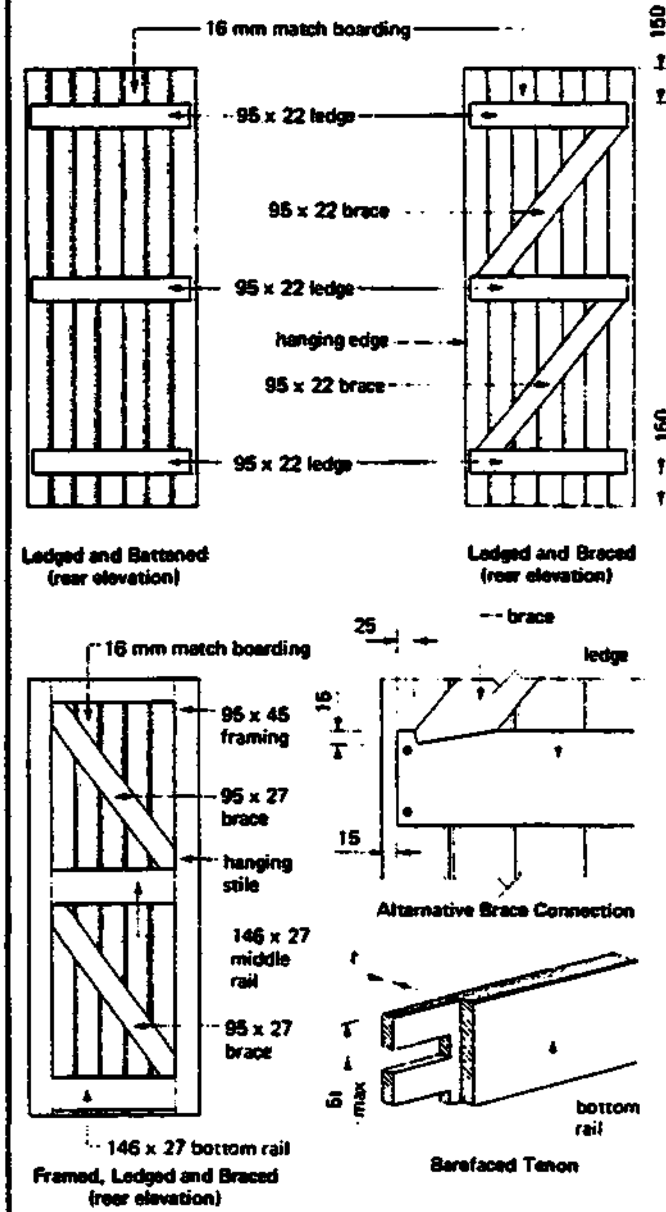

Matchboarded doors

MATCHBOARDED DOORS

- The operation of fixing a door to its frame or lining is termed hanging and entailes.
  - removing the protective horns from the top and bottom of the stiles
  - planing the stiles to reduce the door to a suitable width.
  - cutting and planing the top and bottom to the desired height.
  - marking out and fitting the butts or hinges which attach the door to the frame.
  - fitting any locks and door furniture which is required.
  - The hinges should be positioned 225 mm from the top and bottom of the door and where 1 1/2 pairs are specified for heavy doors the third hinge is positioned midway between the bottom and top hinge.
- A door has to be treated properly during
  - transportation
  - storage
  - after hanging.

+ It should receive a wood priming coat of paint before or immediately after delivery,
+ be stored in the dry and in a flat position (so that it does not twist)
+ receive the finishing coats of paint as soon as practicable after hanging.

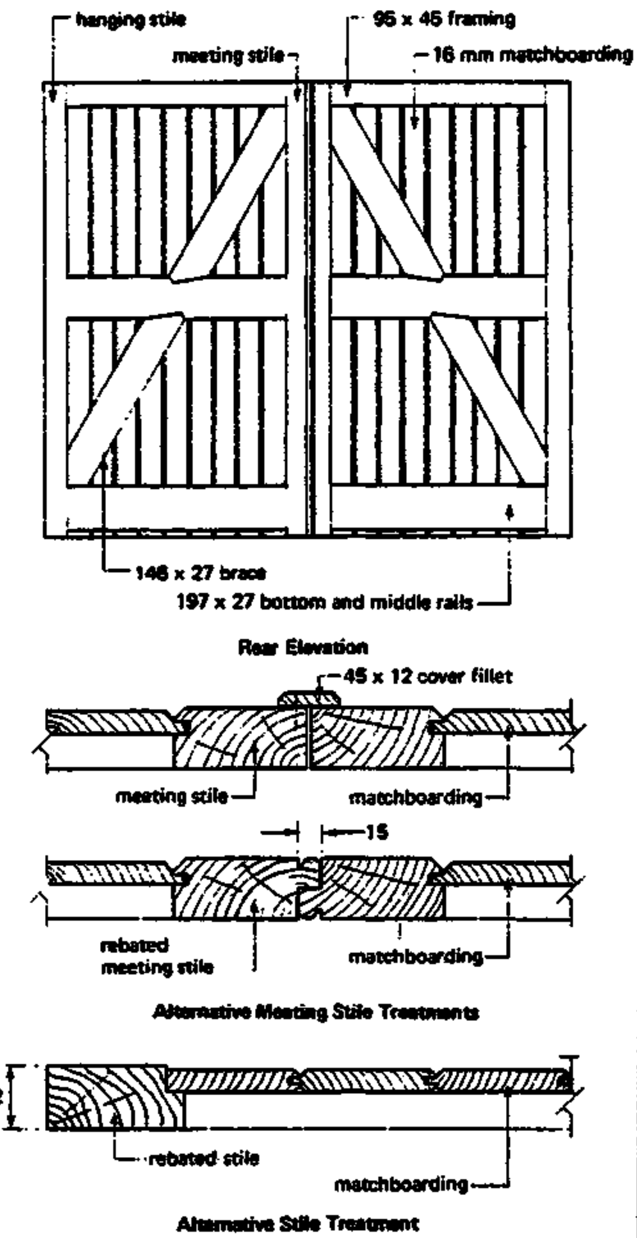

Matchboarded double doors

FRAMES and LININGS

14.1.5 Frames and Linings

- A door frame or lining is attached to the opening in which a door is to be fitted, it provides a surround for the door and is the member to which a door is fixed or hung.
- Door sets are consisting of a story height frame with a solid or glazed panel over the door head.

14.1.5.1 Timber Door Frames

- Are made from rectangular section timber in which a rebate is formed or to which a planted door stop is fixed to provide the housing for the door.
- Generally a door frame is approximately twice as wide its thickness plus the stop.
- A timber door frame consists of three or four members:
  - . one head
  - . two posts or jambs
  - . one sill or threshold.
- The members can be joined together by
  - . wedged mortice and tenon joints,
  - . combed joints or
  - . mortice and tenon joints pinned with a metal star shaped dowel or a round timber dowel.
- All joints should have either a coating of adhesive or a coating of a lead based paint.
- Door frames which do not have a sill are fitted with mild steel dowels driven into the base of the jambs and cast into the floor slab or alternatively grouted into pre-formed pockets as a means of securing the feet of the frame to the floor.

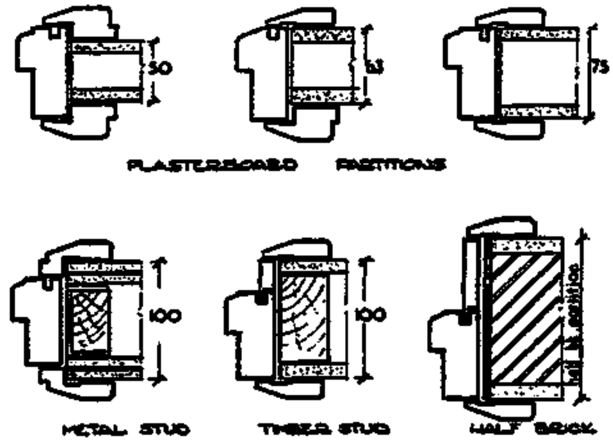

DOOR
FRAME
COMPONENTS

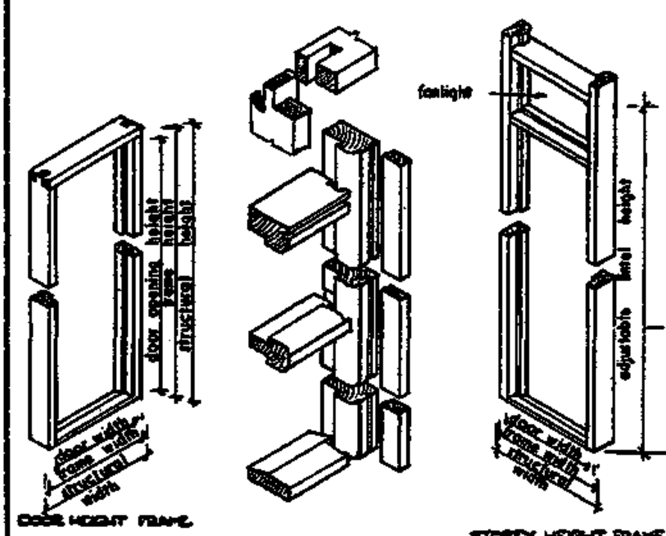

TIMBER DOOR FRAMES

- If the frame is in an exposed position it is advisable to site the feet of the jambs on a damp-proof pad, such as lead or bituminous felt, to prevent moisture soaking into the frame and creating the conditions for fungi attack.
- Door frames fitted with a sill are designed for one of two conditions:
  1. Doors opening out
  2. Doors opening in .

  In both cases the sill must be designed to prevent the entry of rain and wind under the bottom edge of the door.
  - Doors opening out close onto a rebate in the sill
  - Doors opening in have a rebated bottom rail and close over a water bar set into the sill.
- Timberdoor frames can be fixed to a wall by the following methods:
  a) Built into the brick or block wall as the work proceeds by using 'L'shaped ties or cramps.
     The ties are made from galvanised wrought steel with one end turned up 50mm, with 2 holes for wood screws, on the other end being 125 or 225 mm long and fishtailed for building into brick or block bed joints. The ties are fixed to the back of the frame for building in at 450 mm centres.
  b) Fixed into a brick opening at a late stage in the contract to prevent damage to the frame during the construction period.
     This metod is more expensive, but results in a better quality of joinery work.
- The frames are fixed to timber plugs inserted into the reveals with wood screws, whose heads are sunk below the upper surface of the frame.

DOOR FAMES

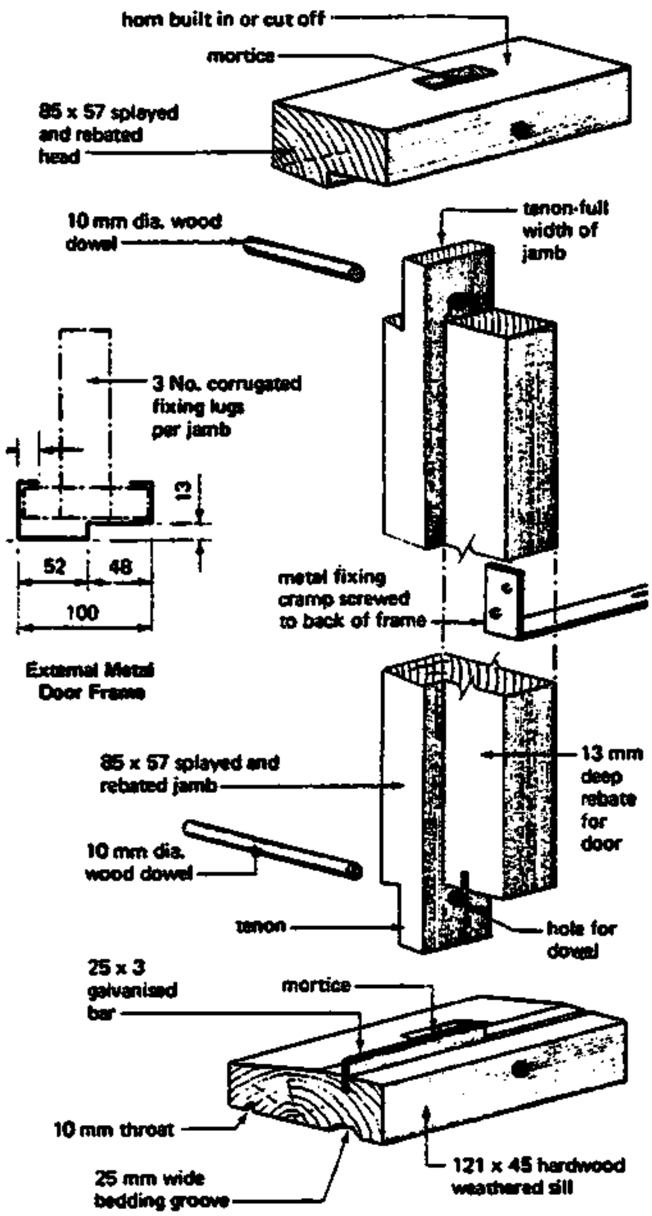

METAL DOOR FRAMES

a.) STEEL FRAME 'PolyNORM'
b) STEEL FRAME 'CATNIC'
c.) STAINLESS STEEL FRAME

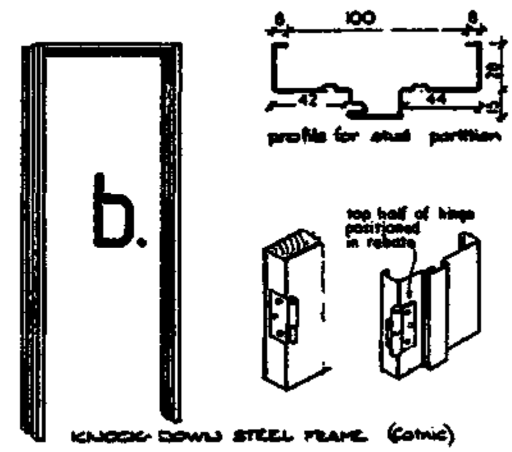

14.1.5.2 Metal door frames

- These are made from mild steel pressed into one of three standard profiles.
- They are suitable for both internal and external positions.
- The hings and striking plates are welded on during manufacture and the whole frame receives a rust-proof treatment before delivery.
- The frames are fixed in a similar manner to timber frames using a tie or lug, which fits into the back of the frame profile and is built into the bed joints of the wall.
- The advantage of this type of frame is that they will not shrink or warp, but they are more expensive than timber ones.

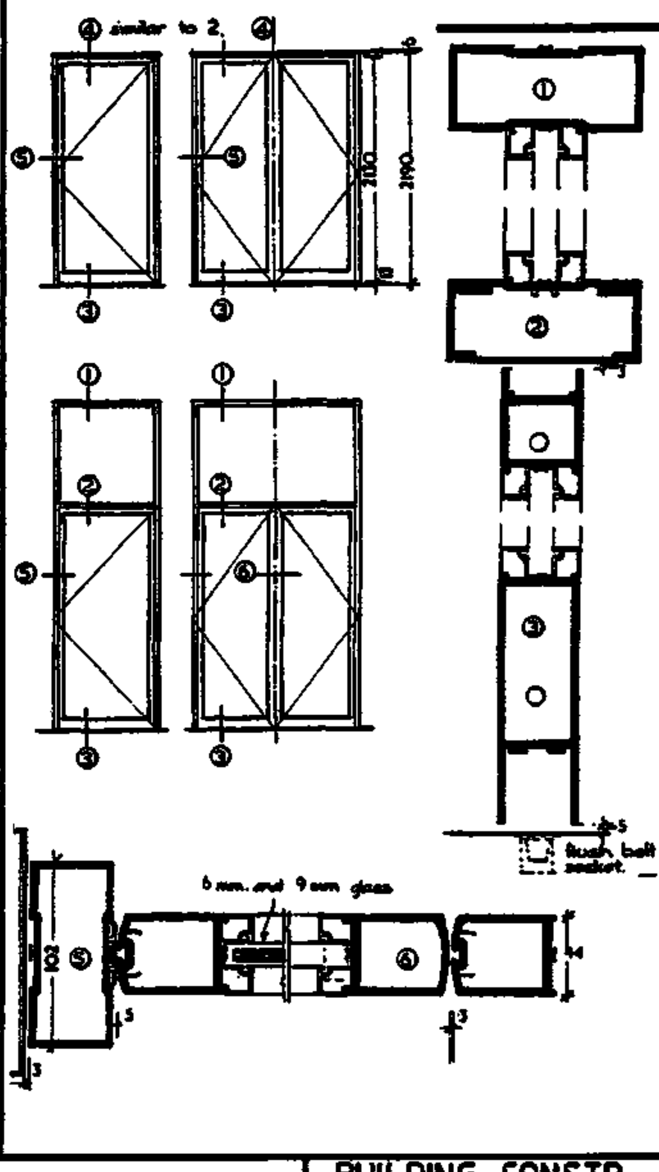

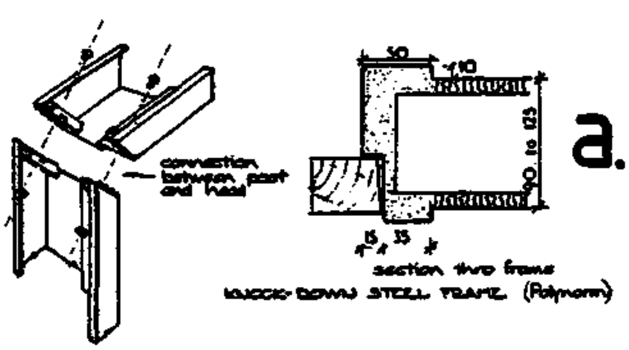

14. DOORS & WINDOWS	DOORS	BUILDING CONSTR.
compiled : D. VOLKE		LECTURE
JAN. '83		CET 8031 / 1 14.1 13

DOOR FRAMES

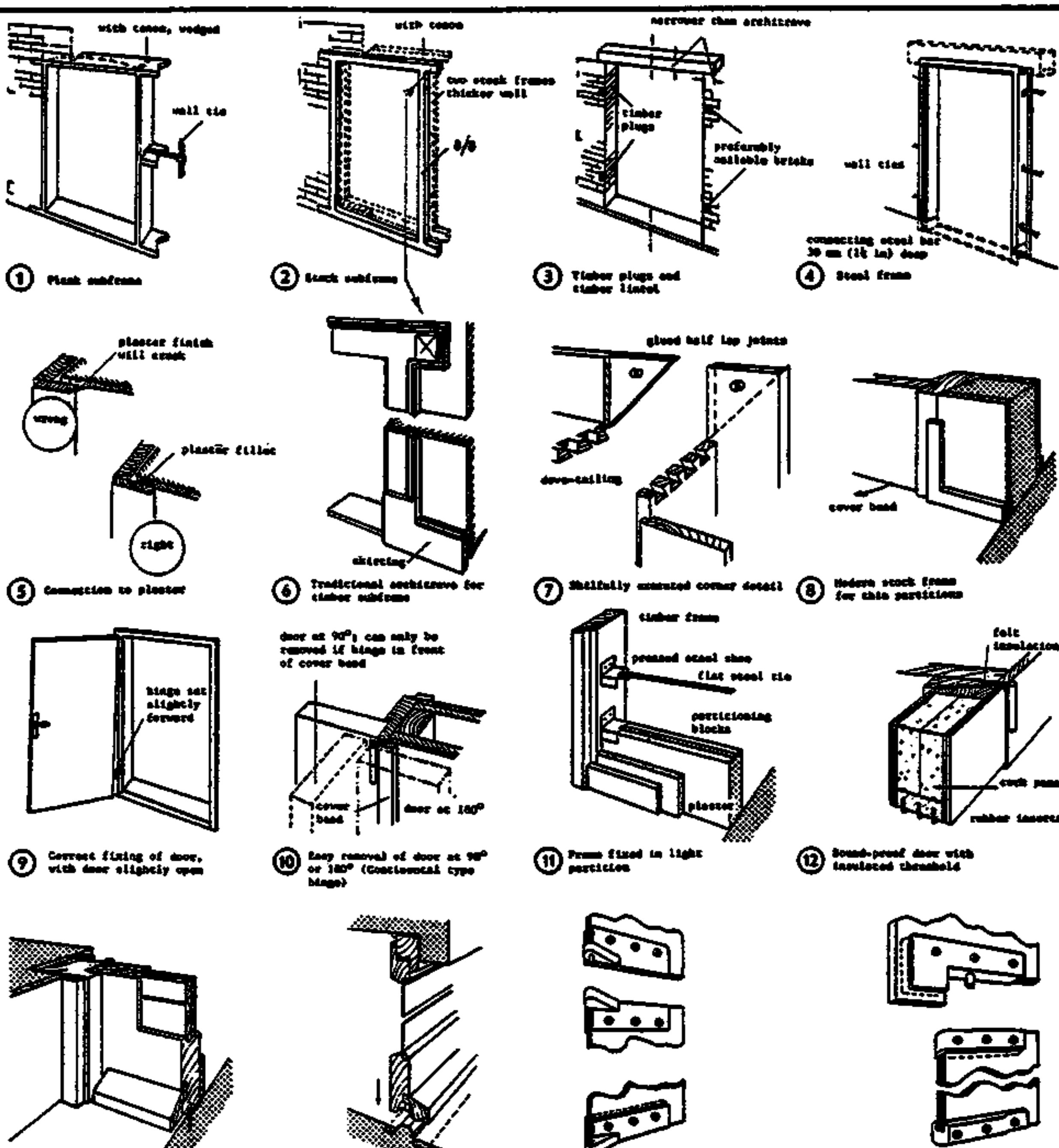

(1) Plank subframe (2) Stock subframe (3) Timber plugs and timber lintel (4) Steel frame

(5) Connection to plaster (6) Traditional architrave for timber subframe (7) Skilfully executed corner detail (8) Modern stock frame for thin partitions

(9) Correct fixing of door, with door slightly open (10) Easy removal of door at 90° or 180° (Continental type hinge) (11) Frame fixed in light partition (12) Sound-proof door with insulated threshold

(13) Entrance door (14) Rising French door (15) One sided hinge for all-glass doors with fan light (16) Swing door hinges for all-glass doors with fan light

(17) All-glass door with bottom rail

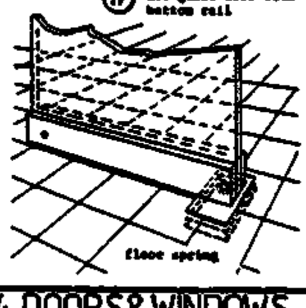

Timber subframes and plugs require lining and architrave, which must cover up the plaster.

For the best finish the lining must be dovetailed and the architrave half-mitred, → (7). Planed stock frames for light partitions are also a guide for the plaster finish and are erected before putting up partition blocks, → (8); to avoid damage, doors should be easily removable, → (10).

Doors in thin partitions are fixed in steel, → (8), or timber frames with wall tie, → (11). For outside doors plywood must be of external quality; timber doors (weather boarding), steel doors or steel-framed doors with glass panels are preferable. Panels in external doors must overlap, → (13). For French doors on balconies, doors should have rising gear, → (14).

In modern office blocks etc. frameless all-glass doors (armour-plate glass) are used, → (15)-(16), often with automatic electrically-operated opener and floor springs, → (17)

DOOR LININGS

14.1.5.3 Door linings

- These are made from timber board 25 or 35 mm thick and as wide as the wall and any wall finishes.
- They are usually only specified for internal doors.
- Door linings are not built in but are fixed into an opening by nailing or screwing directly into block walls or into plugs in the case of brick walls.
- Timber packing pieces or folding wedges are used to straighten and plumb up the sides or jambs of the linings.

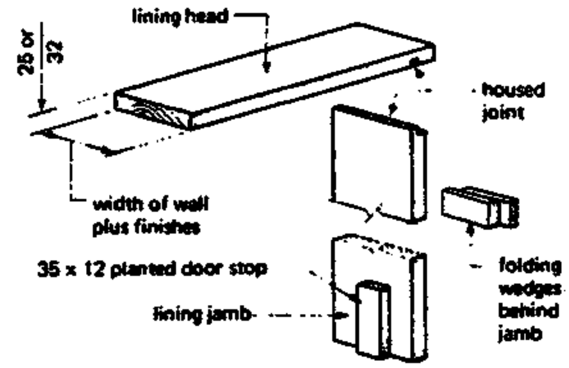

Typical Door Lining

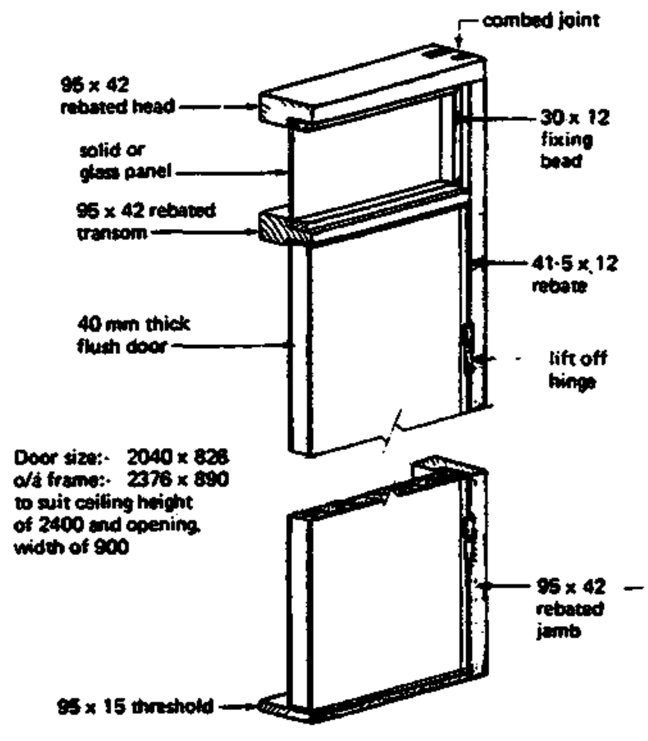

Typical Door Set

Door linings and door sets

14.1.6 SPECIAL DOORS

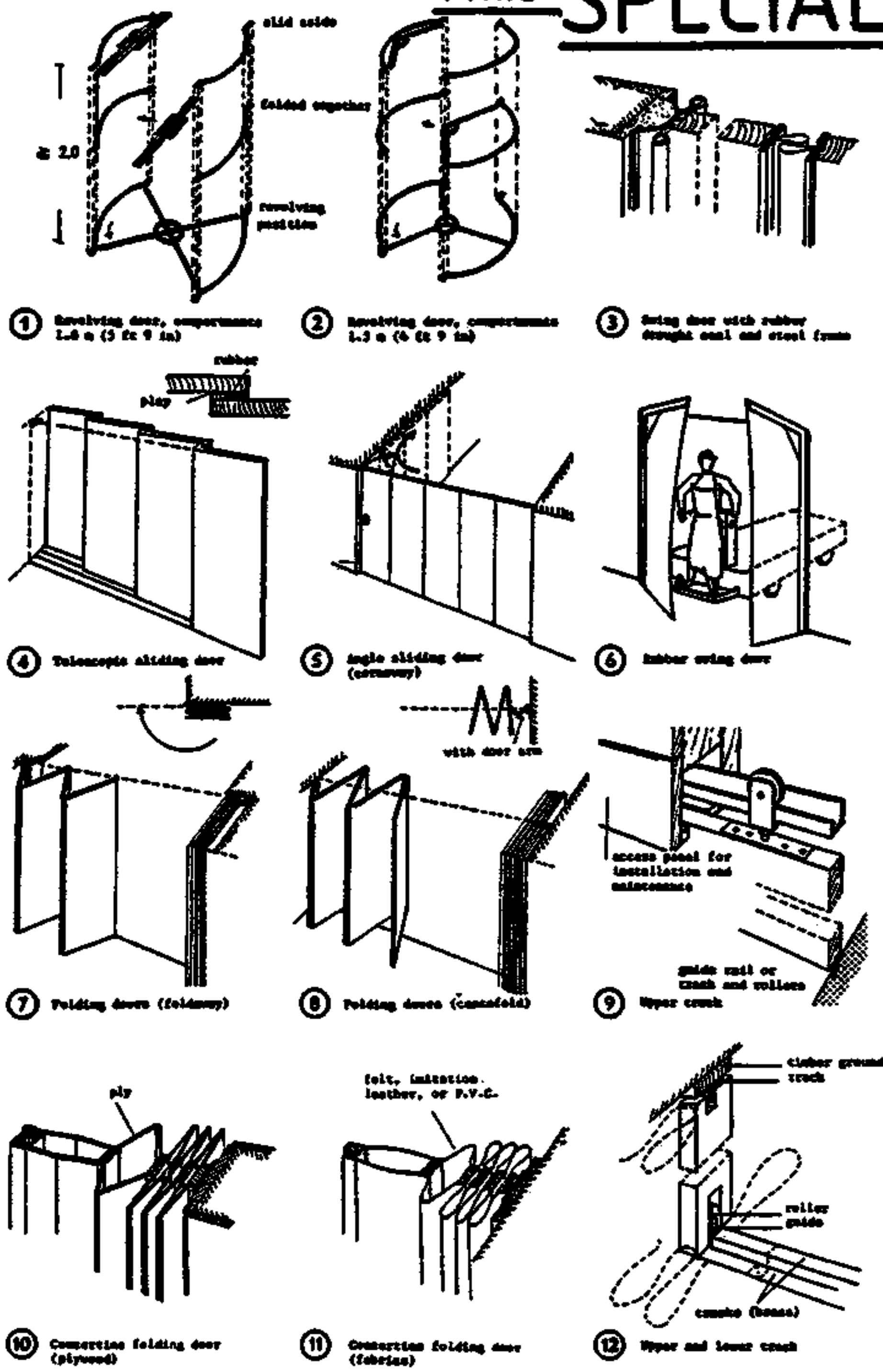

Revolving doors have wings which may be folded back during peak traffic, especially in summer. Wings are folded away completely if traffic is in one direction only (e.g. at closing time).

Swing doors have spring, check and helical hinges, or shoes and top centres and floor springs. To stop swing and achieve air-tightness, interchangeable draught seals are inserted at meeting styles, → (3).

Large openings (partitions), etc, which cannot be closed by normal swing doors are fitted with special sliding doors, sliding-folding doors, or concertina-folding doors, → (4)-(8). Such doors have hangers (top hung) or rollers (bottom rolling), → (9); rollers, as in lightweight concertina doors, → (12), are infrequently used.

Narrow rooms which provide no space for sliding doors may be closed by overhead doors sliding beneath ceiling, → (13)-(16).

All these doors can be electrically operated and this is especially suitable for large openings with heavy door structures (garages, hangars, etc).

Adjustable fillet rails are necessary at the meeting styles of large doors to cope with temperature fluctuations in steel doors and shrinkage in large timber doors.

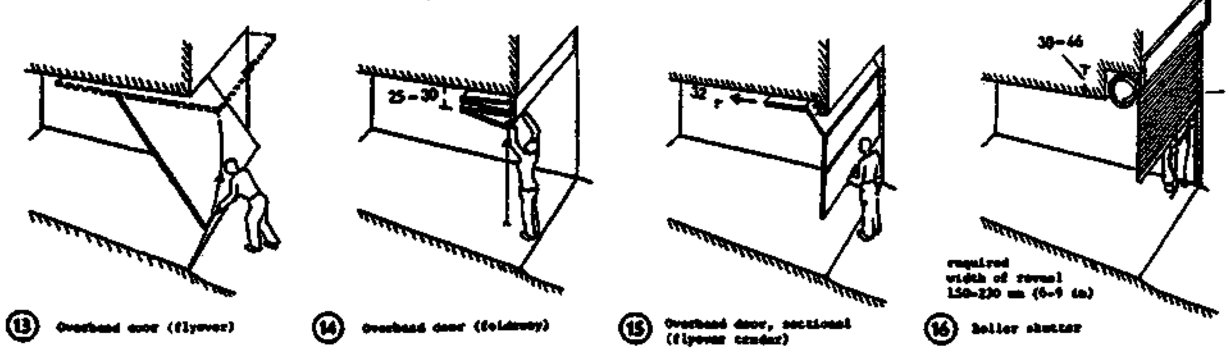

14. DOORS & WINDOWS	DOORS	BUILDING CONSTR.
compiled : D. VOLKE		—— LECTURE ——
JAN. '83		CET 8031 / 1 14.1 16

TCA	TECHNICAL COLLEGE ARUSHA CHUO CHA UFUNDI ARUSHA	CIVIL ENGINEER. DEPARTMENT	16

1.FLEXIBLE DOOR 2.STEEL FIRE DOOR
3.WARDROBE DOOR 4.REVOLVING DOOR

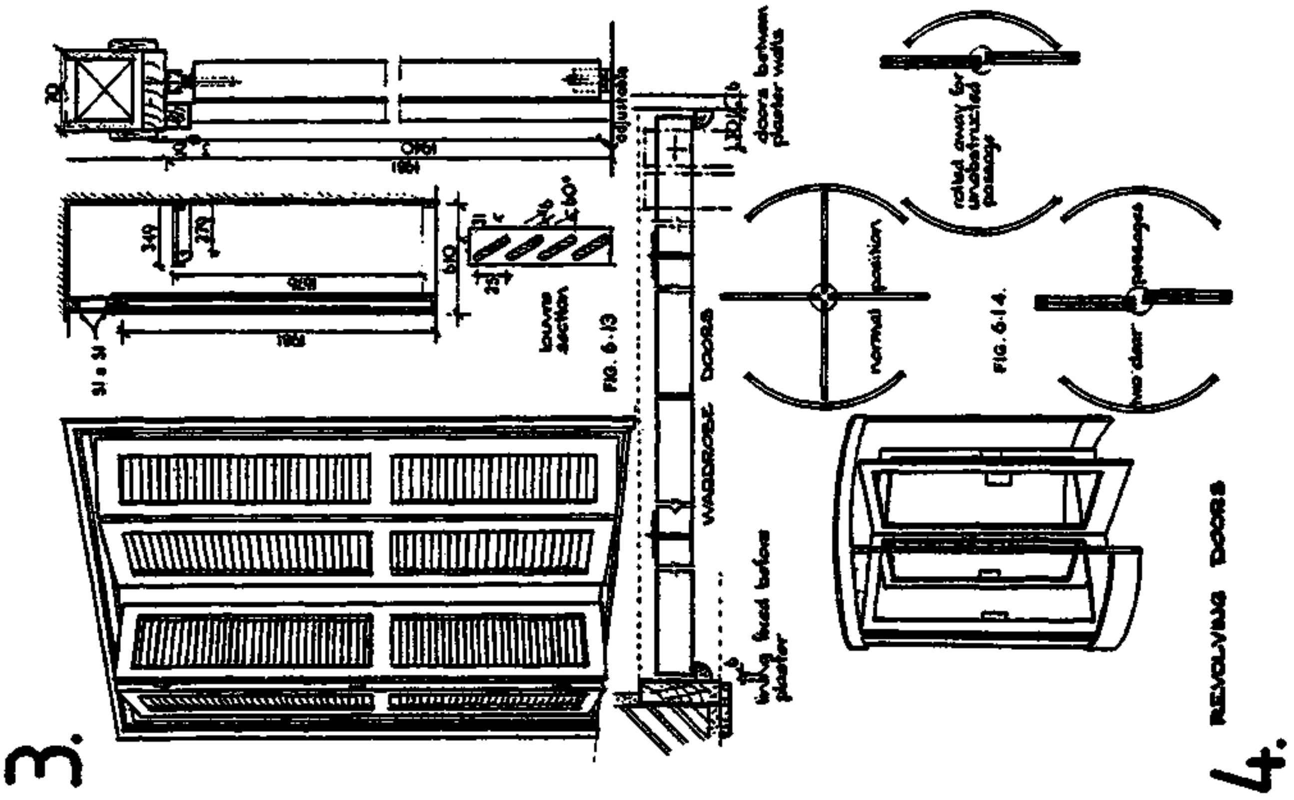

3.

4.

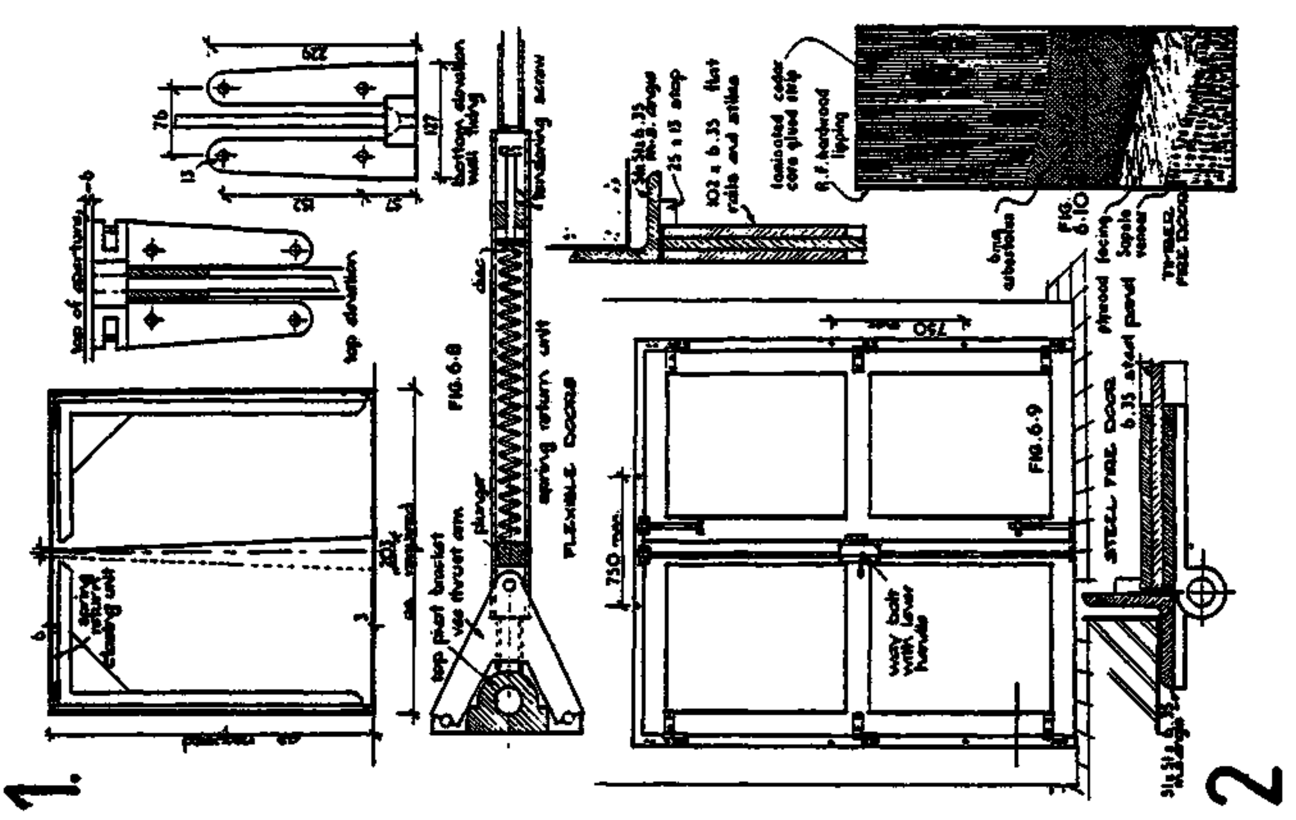

1.

2

14.DOORS & WINDOWS compiled : D.VOLKE JAN. '83	DOORS	BUILDING CONSTR. LECTURE CET 8031/1 14.1 17

TCA TECHNICAL COLLEGE ARUSHA / CHUO CHA UFUNDI ARUSHA — CIVIL ENGINEER. DEPARTMENT — 17

1.FOLD. SHUTT. DOOR 2.COLLAPS.GATE
3.ROLLER SHUTTER 4.FLY-OVER DOOR

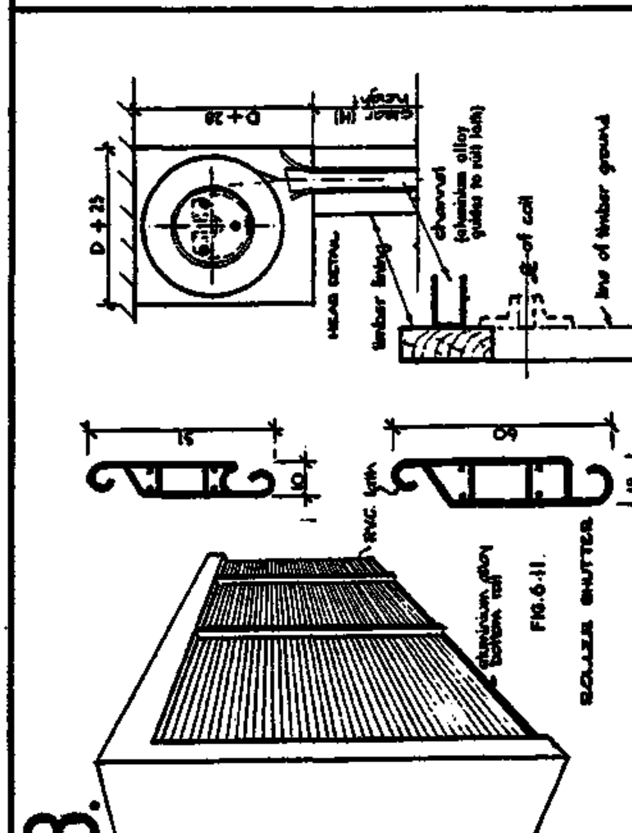

3.

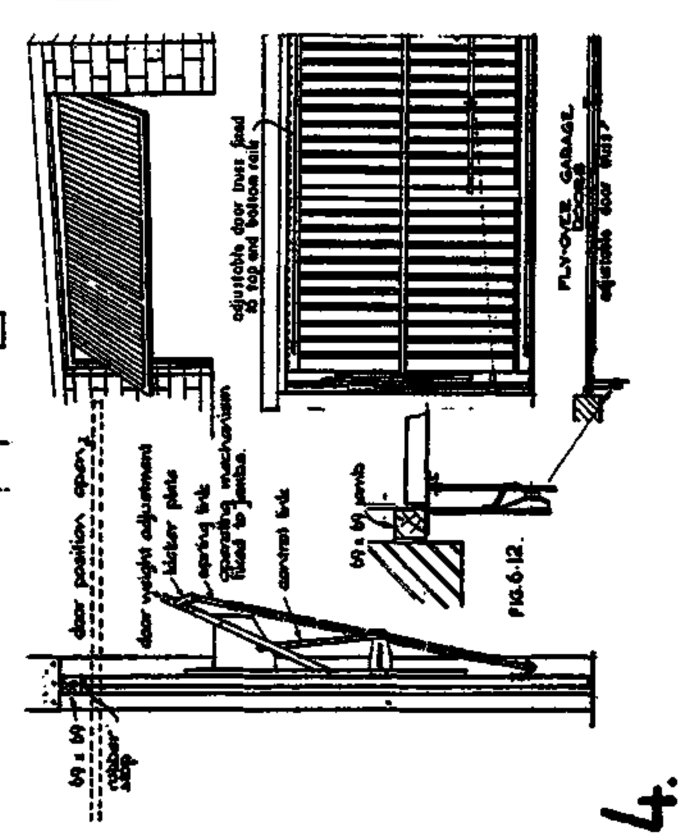

4.

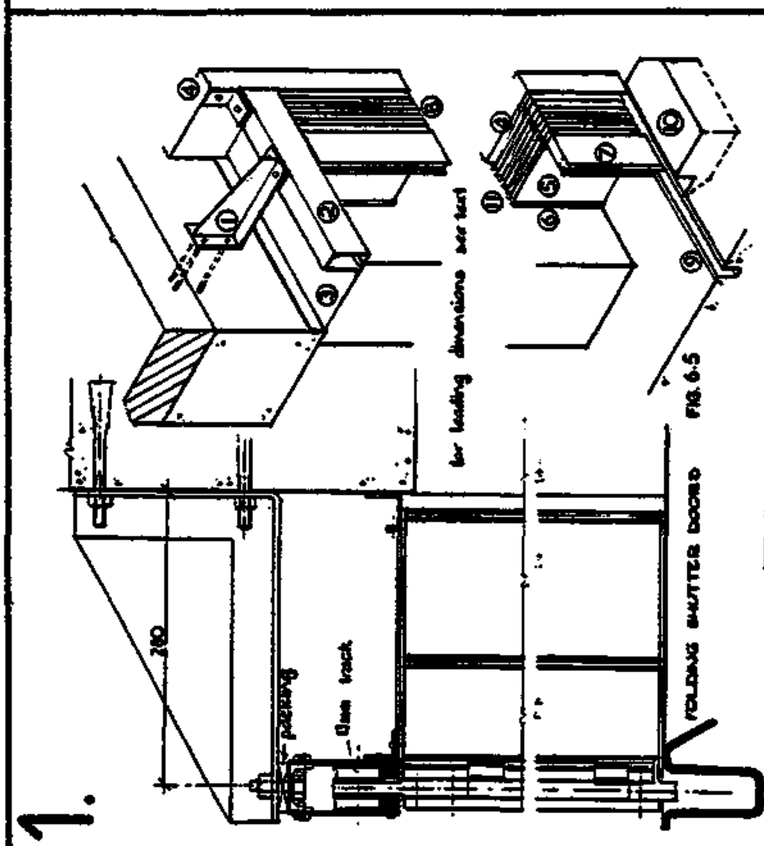

1.

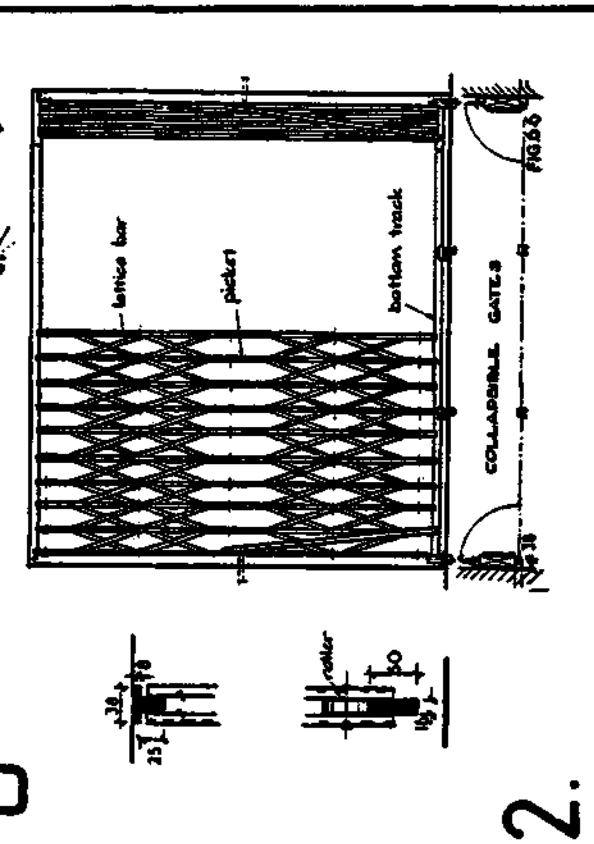

2.

14.DOORS&WINDOWS compiled : D.VOLKE JAN. /83	DOORS	BUILDING CONSTR. ——LECTURE—— CET 8031/1 14.1 18
TCA	TECHNICAL COLLEGE ARUSHA CHUO CHA UFUNDI ARUSHA	CIVIL ENGINEER. DEPARTMENT

SLIDING DOORS

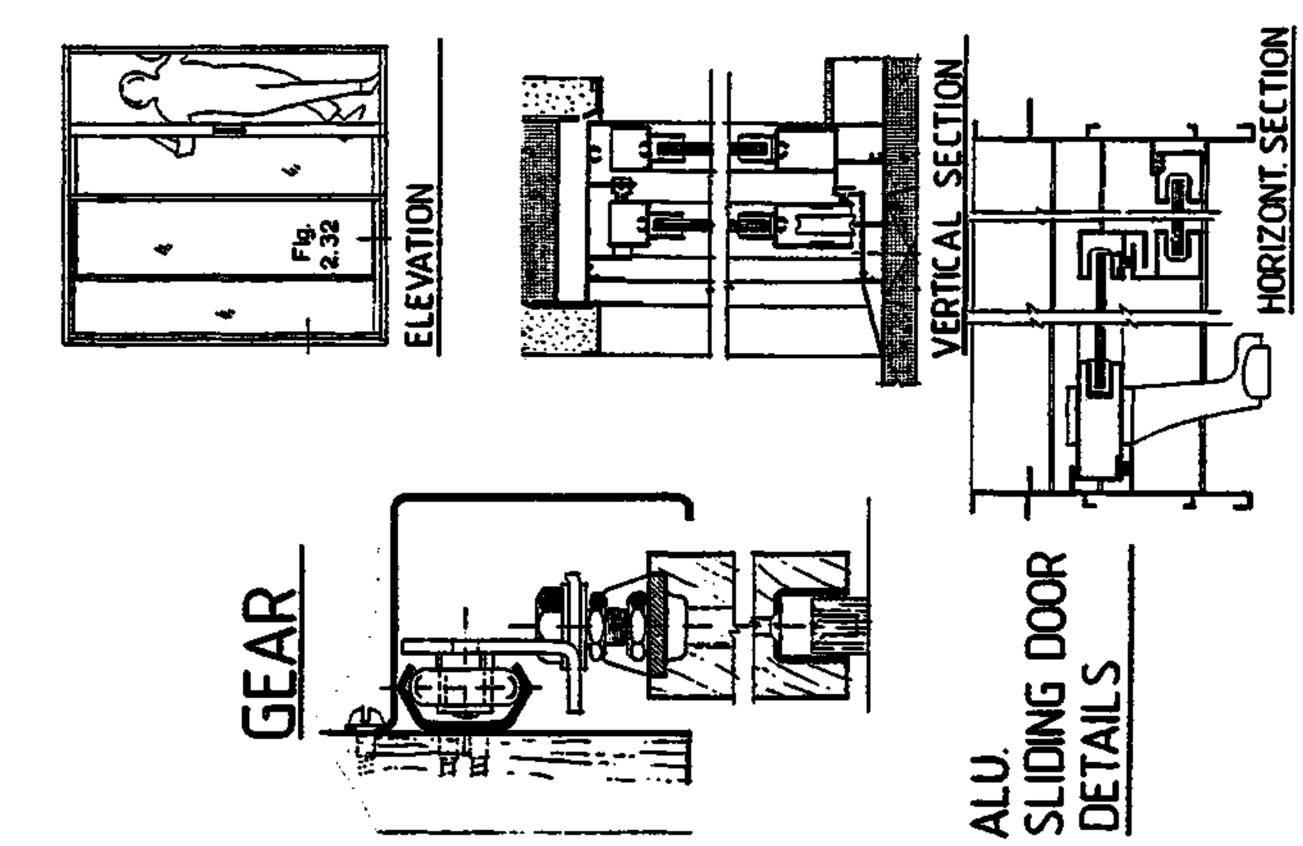

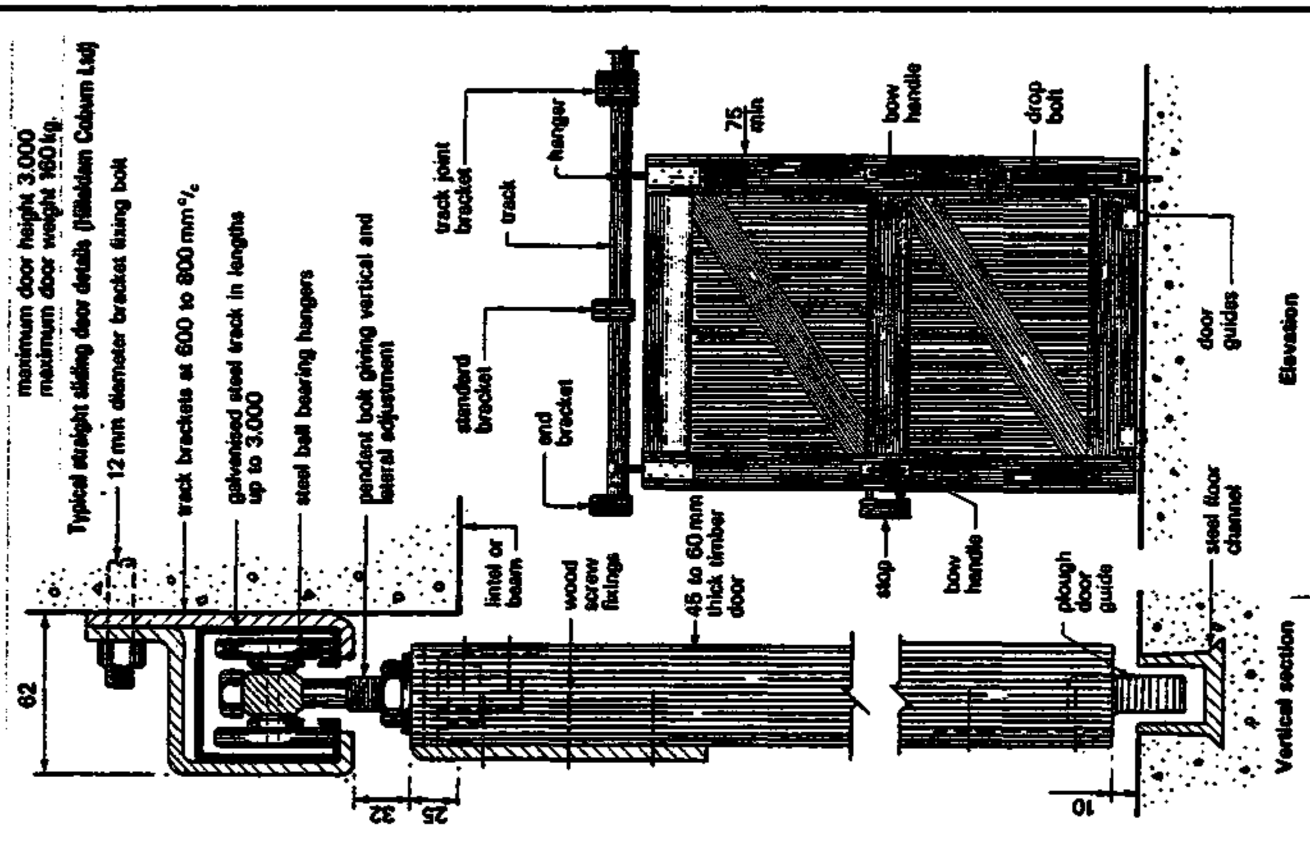

14. DOORS & WINDOWS	DOORS	BUILDING CONSTR.
compiled : D. VOLKE		LECTURE
JAN. 83		CET 8031/1 14.119
TCA TECHNICAL COLLEGE ARUSHA CHUO CHA UFUNDI ARUSHA	CIVIL ENGINEER. DEPARTMENT	19

FOLDING DOORS

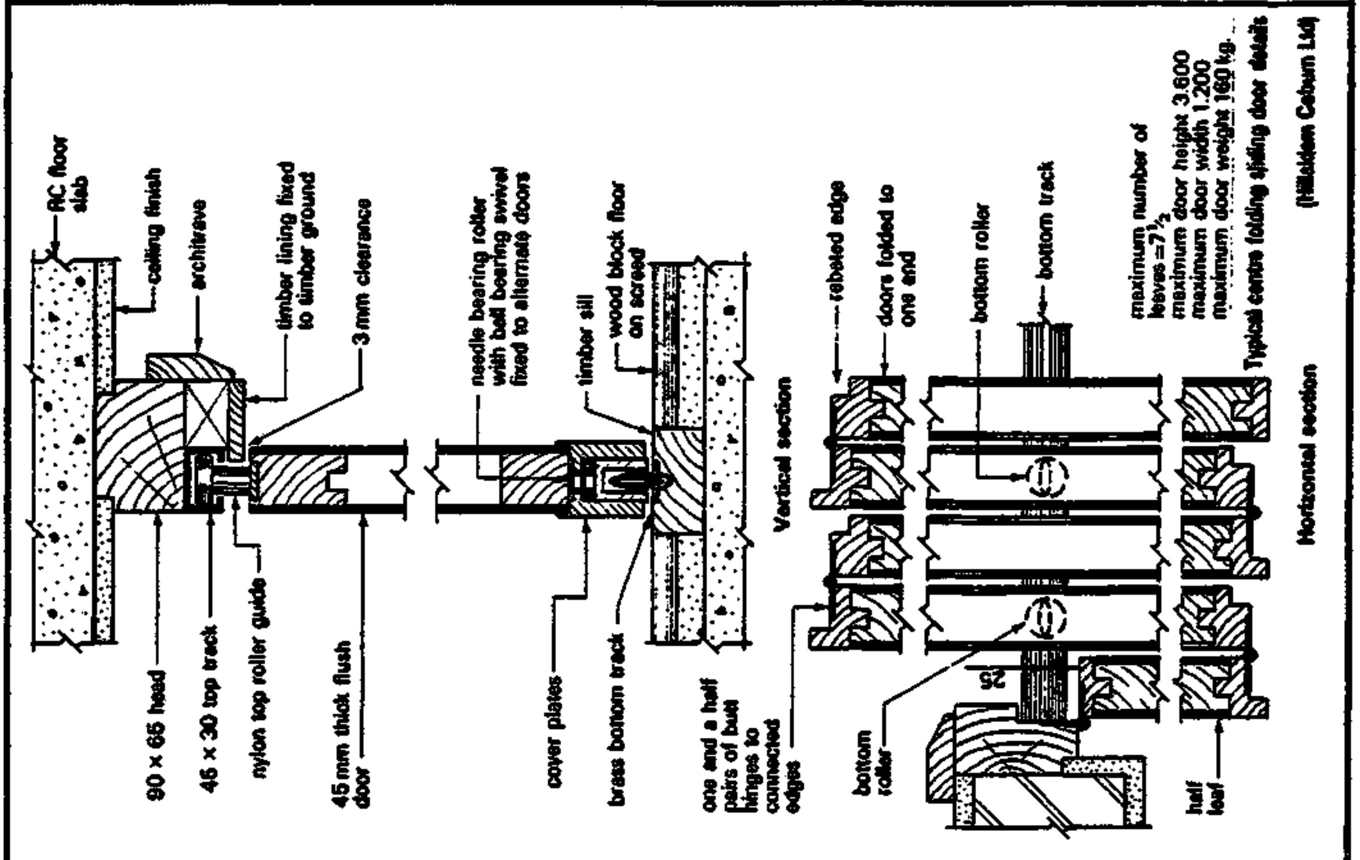

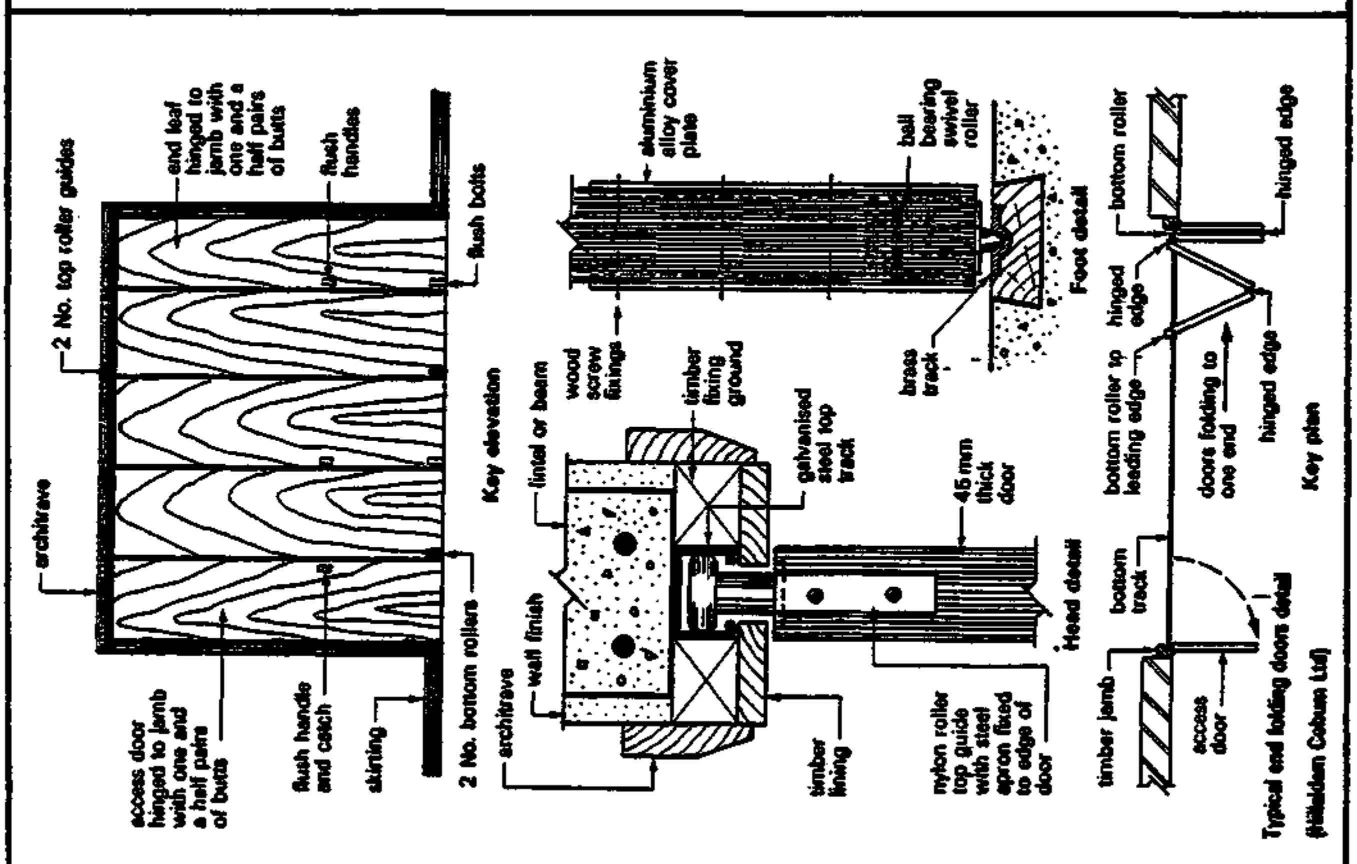

14.2 WINDOWS,GLASS &.GLAZING

PRIMARY FUNCTIONS OF WINDOWS

14.2.0 Primary Functions of Windows:

- to provide a means for admission of natural daylight to the interior of a building.
- to provide a means of the necessary ventilation of buildings by including opening lights into the windows.
- A window not only provides daylight and ventilation, also a view at the external surroundings, which is vital for the occupants.

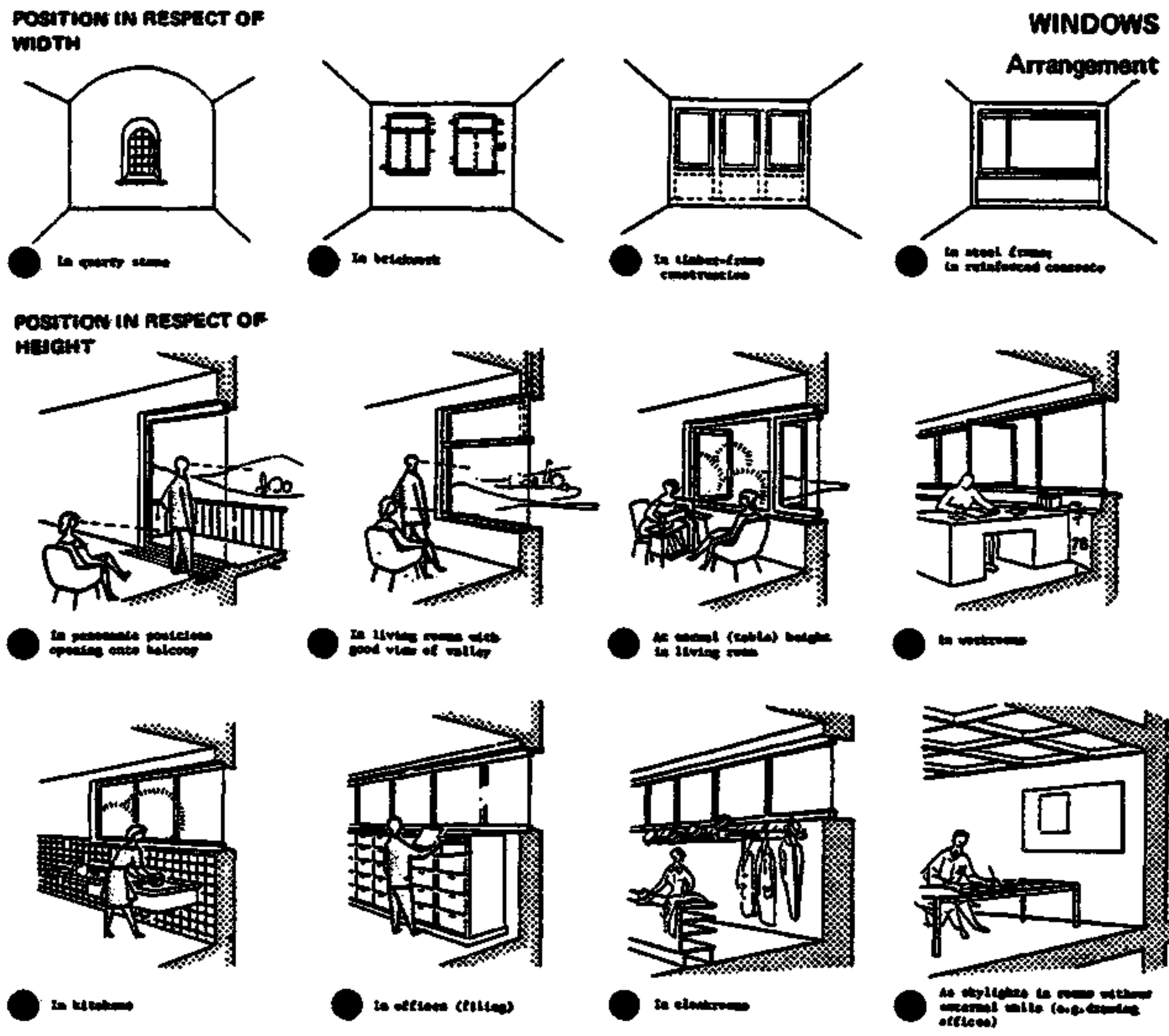

- Windows, like doors, can be made from different materials (or a combination of these such as:
  - timber
  - metal and
  - plastic
- They can also be designed to operate in different ways by arranging for the sashes
  - to slide (vertically or horizontally
  - to pivote (vertically hung, horizontally hung)
  - to swing, by being hung to one of the frame members. This is known as a CASEMENT WINDOW and it is the most widely used type of windows.

PRIMARY FUNCTIONS

TYPES OF OPENING

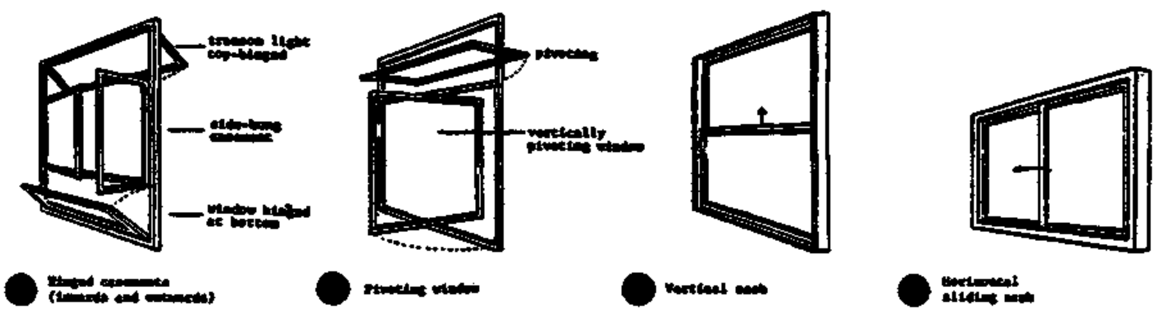

VENTILATION

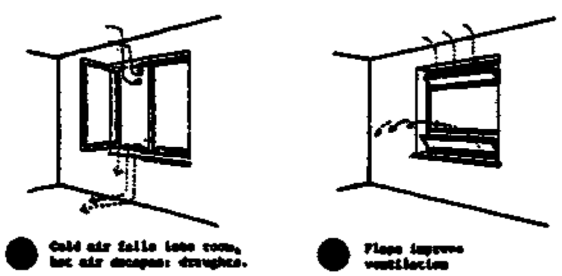

VENTILATION

PROTECTION

PROTECTION AGAINST BREAK-IN

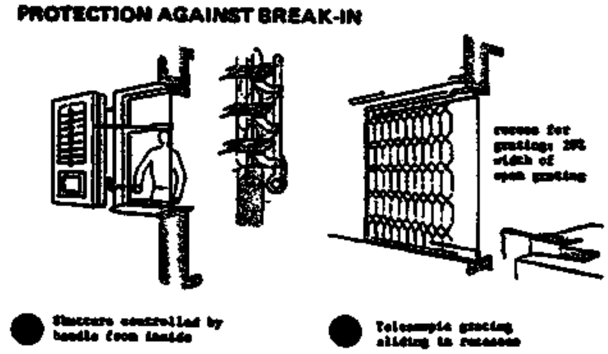

Window spaces

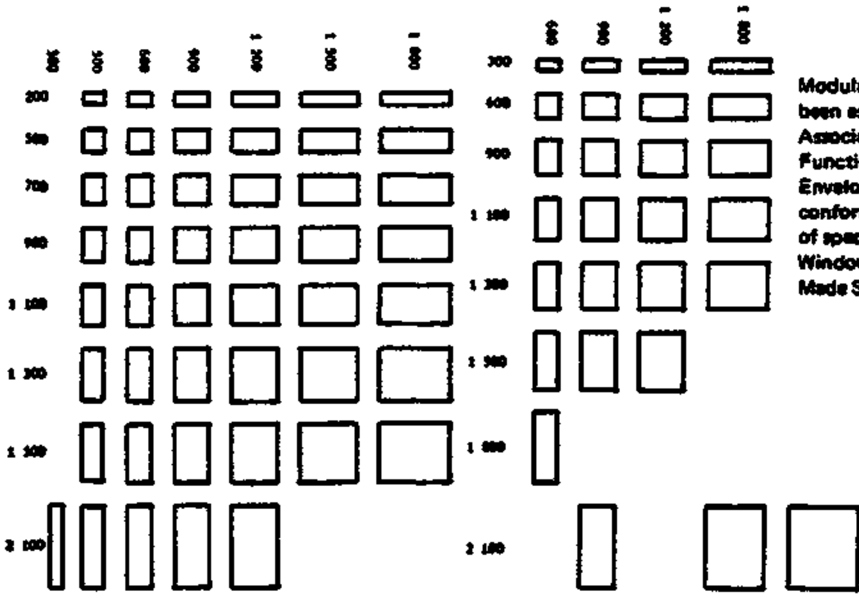

Basic spaces in mm for standard steel windows as issued by the Steel Window Association: (left) Housing (right) Other Building Types (purpose made steel windows).

Modular basic spaces for steel windows have been established for UK by the Steel Window Association from matrices produced by BSI Functional Group Panel B/94/4/2 (External Envelope), with lengths of basic spaces conforming to BS 4011. There are two ranges of space sizes: 1 Housing (Standard Steel Windows): 2 Other Building Types (Purpose Made Steel Windows).

BUILDING REGULATIONS

K1
K2
K3

14.2.1 Building Regulations

- Regulations K1, K2 and K3 deal with the daylight aspect of the windows.
  - These regulations require for an OPEN SPACE outside windows of habitable rooms (open to the sky and free from obstructions.
  - The minimum size of the open space is related to the height of the wall containing the window.
  - The height is measured from the lower window level (= actual or a min. of 1.20m above the floor to the top of the wall (1. Soffit of a flat roof; 2. lowest part of the eaves for a pitched roof; 3. the top of a parapet, wether the roof is flat or pitched).

K4

- BR K4 deals with the VENTILATION OF HABITABLE ROOMS. (For the purpose of this regulation, a room used i.e. for a kitchen is classified as a habitable room) A HABITABLE ROOM must have ventilation openings (unless it is adequately ventilated by mechanical means.

BUILDING REGULATIONS

- Constructional by - laws require windows equal to at least 1/10th of the area of the floor of the room.
- There is no definition in the B.R. of adequate mechanical means, but it is generally recommended:
  - Three of four air changes per hour would be a reasonable ventilation standard.
- Ventilation opening = any part of a window or hinged panel, adjustable louvre etc. which opens directly to the open air. (excluded are openings assosiated with a mechanically operated system.
  = a door (if it opens directly to the external air) can be defined as a ventilation opening if it has an opening ventilator with an area of not less than 10 000 mm^2 or if it is situated in a room which contains one or more ventilation openings whose total area is not less than 10 000 mm^2.
- The basic requirements for ventilation openings are:
  1. Total area of the ventilation opening (or openings) must exeed 1/20th of the floor area of the room it serves.
  2. Some part of the ventilation opening must be not less than 1,75 m above the floor level.
  3. Rooms with an enclosed veranda must have vent. openings whose total area is not less than 1/20th of the combined floor areas.
  4. Any larder must be ventilated to the external air and if this is achieved by using windows they must have ventilation openings whose total area is not less than 85 000 mm^2 and must be fitted with a durable fly-proof-screen.

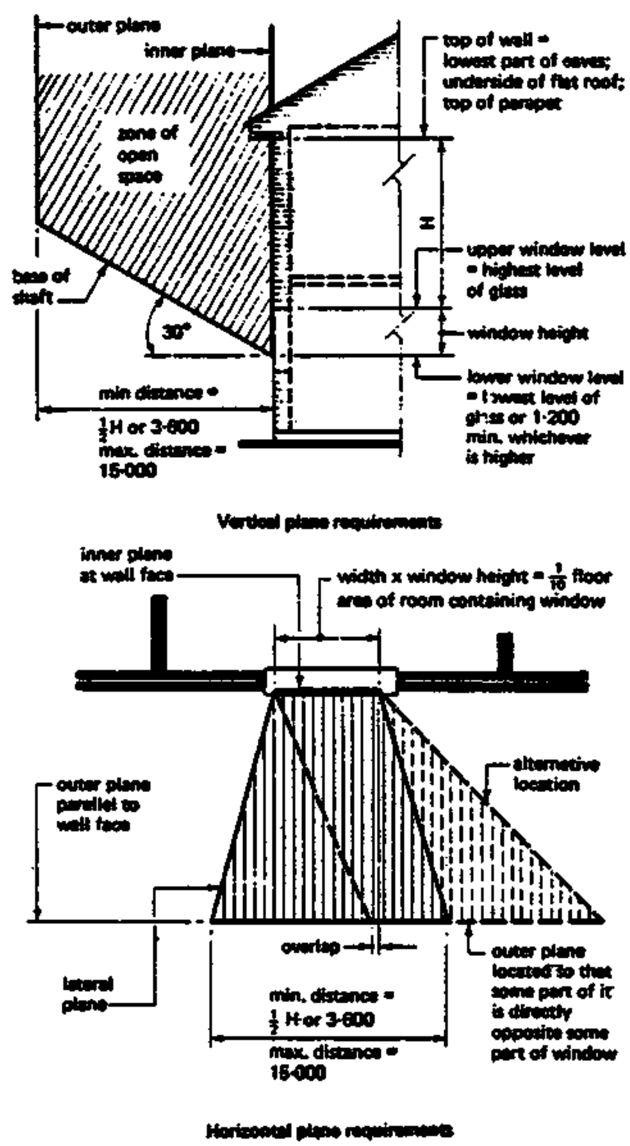

Windows and zones of open space — B. Reg. K1

14 DOORS & WINDOWS compiled : D.VOLKE JAN. '83	WINDOWS	BUILDING CONSTR. LECTURE CET 8031 / 1 14.2.24
TCA TECHNICAL COLLEGE ARUSHA CHUO CHA UFUNDI ARUSHA	CIVIL ENGINEER. DEPARTMENT	24

TRADITIONAL CASEM. WINDOWS

14.2.2 Traditional casement windows.

- A wide range of designes can be produced by using various combinations of the members. A limiting factor is the size of glass pane relevant to its thickness.
- The general arrangement of the framing is important:
  - heads and sills always extend across the full width of the frame (and in many cases have projecting horns for building into the wall)
  - jambs and mullions span between the head and sill; these are joined to than by a wedged or pinned mortise and tenon joint.
- This arrangement gives maximum strength since the vertical members will act as struts. It will also give a simple assembly process.
- The traditional casement window frame has deep rebates to accomodate the full thickness of the sash (= term for the framing of the ventilator). If fixed glazing or lights are required it is necessary to have a sash frame surround to the glass since the depth of rebate in the window frames is too great for direct glazing to the frame.

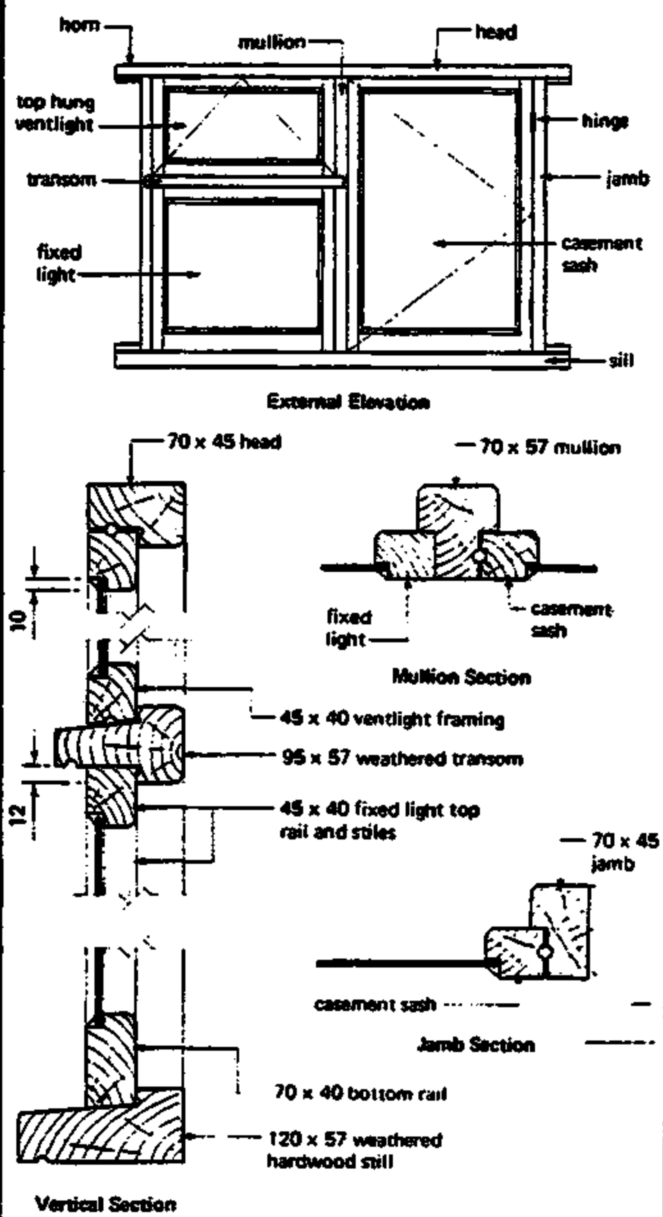

Traditional timber casement window

STAND. WOOD CASEM. WINDOWS

14.2.3 Standard Wood Casement Windows.

- B.S. 644, Part I, gives details of the
  - quality
  - construction and
  - design

  of a wide range of wood casement windows.
- Frames, sashes and ventlights are made from standard sections of soft wood timbers arranged to give a variety in design and size.
- Sashes and ventlights are designed so that their edges rebate over the external vace of the frame to form a double barrier to the entry of wind and rain.

  The general construction is similar to that described for traditional casement windows and the fixing of the frame into the walls follows that described for door frame.
- Most joinery manufacturers produce a range of modified standard casement windows following the basic priciples set out in BS 644 but with improved head, sill and sash sections.
- The range produced is based on a module for basic spaces of 300 mm giving the following lengths (in mm):
  600; 900; 1200; 1800; 2400
- Frame heights follow the same pattern with the exeption of one half module (in mm):
  600; 900; 1050; 1200; 1500.
- Window types are identified by a notation of figures and letters, i.e.: 4 C V 30 where
  4 = four width modules
  = 4 x 300 mm = 1200 mm
  C = casement
  V = ventlight
  30= three height modules
  = 3 x 300 mm = 900 mm

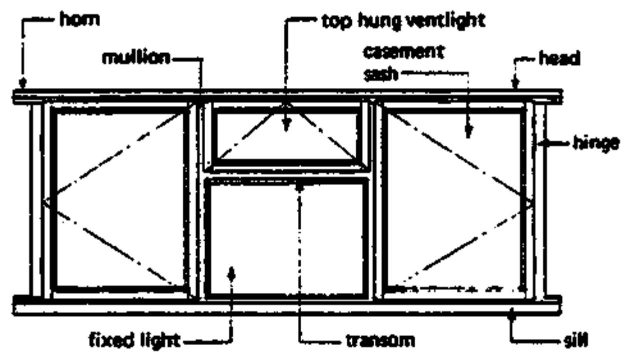

External Elevation (8 CVC35 window)

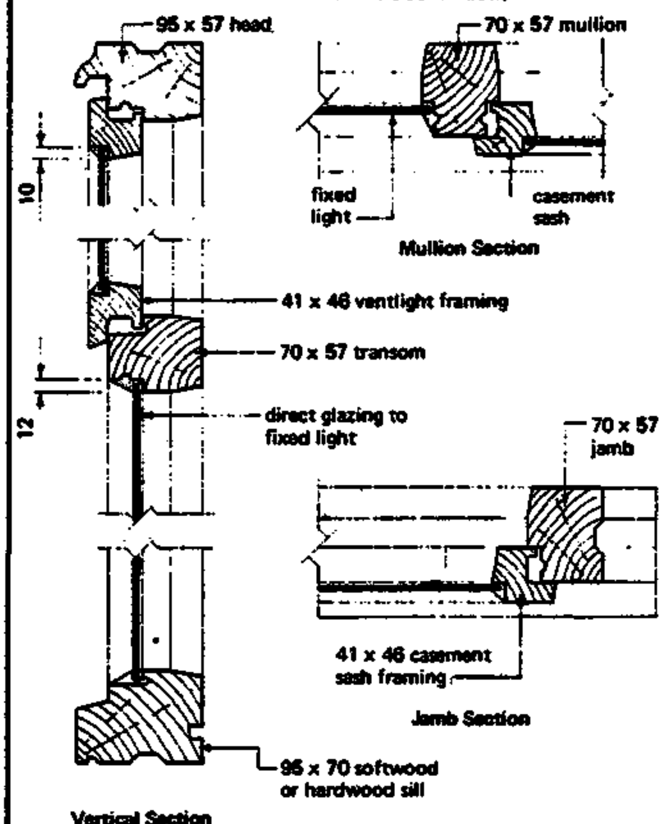

Typical modified BS casement window

STEEL CASEMENT WINDOWS

14.2.4 Steel Casement Windows

- B.S. 990 gives details of construction, sections, sizes, composites and hardware.
- The standard range coveres
  - fixed lights
  - hung casements
  - pivot casements and
  - doors.
- The lengths, in the main, conform to the basic space first preference of 300 mm giving the following range (in mm) 500; 600; 800; 900; 1200; 1500; 1800.
- Frame heights are based upon basic spaces for the preferred head and sill heights for public sector housing giving the following sizes (in mm): 200; 500; 700; 900; 1100; 1300; 1500.
- Steel windows (like wood windows) are identified by a notation of numbers and letters:
  - Prefix number x 100 = basic space length
  - code letters:
    - F = fixed light
    - C = side hung casement opening out
    - V = top hung casement opening out and extending full width of frame
    - T = top hung casement opening out and extending less than full width of frame.
    - B = bottom casement opening inwards
    - S = fixed sublight
- suffix number: x 100 = basic space height
- suffix code: R.H = right - hand casement as viewed from outside
  L.H = left-hand casement as viewed from outside.

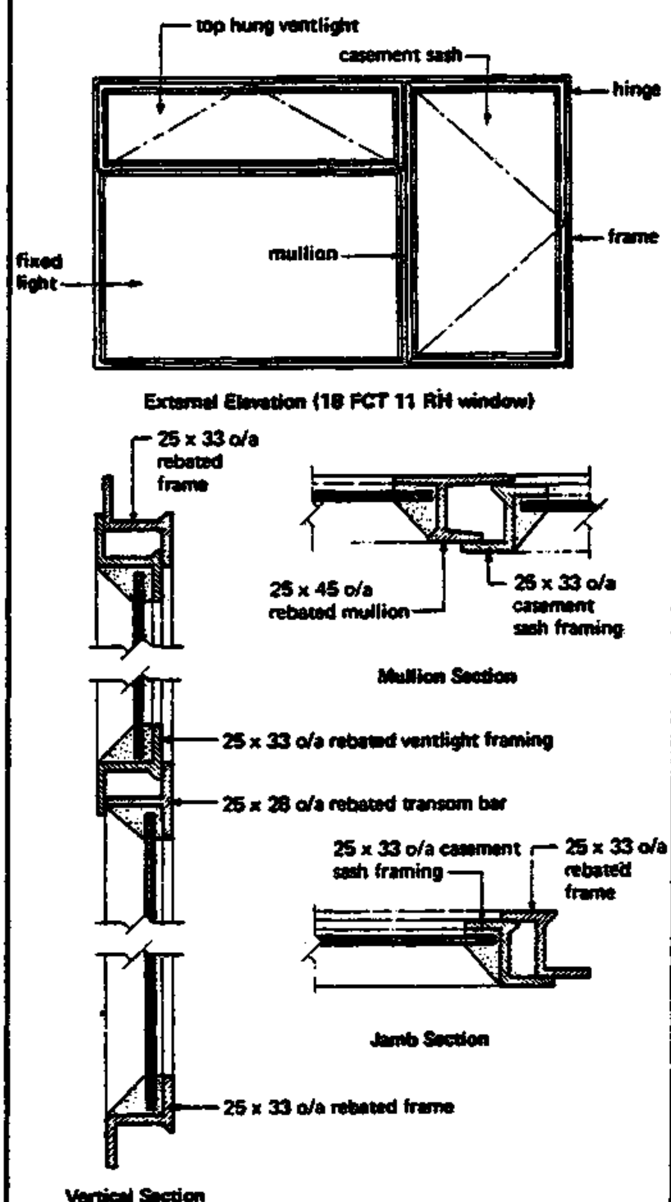

Typical BS 990 steel window

STEEL CASEMENT WINDOWS

- The basic range of steel windows can be coupled together to form composite frames by using TRANSOM and MULLION coupling sections without increasing the basic space module of 100 mm - The actual size of a steel frame can be obtained by deducting the margin-allowance of 6mm from the basic space size.
- All the frames are made from basic rolled steel sections which are mitred and welded at the corners to form right- angles;
  - internal bars are tenoned and rivetted to the outer frame and to each other.
  - the completed frame receives a hot dip galvanised protective finish after manufacture and before delivery.
- Steel windows can be fixed into an opening by a number of methods such as:
  - using a wood surround which is built into reveals and secured with fixing ties or cramps. The wood surround will add 100 or 50 mm to the basic space size in each direction using either a nominal 75 x 75 mm or 50 x 75 mm timber section.
- Advantage of steel windows
  - larges glass area (due to smaller frame sections)
- Disadvantage of steel windows:
  - condensation, which can form on the frames because of the hight conductivity of the metal members.

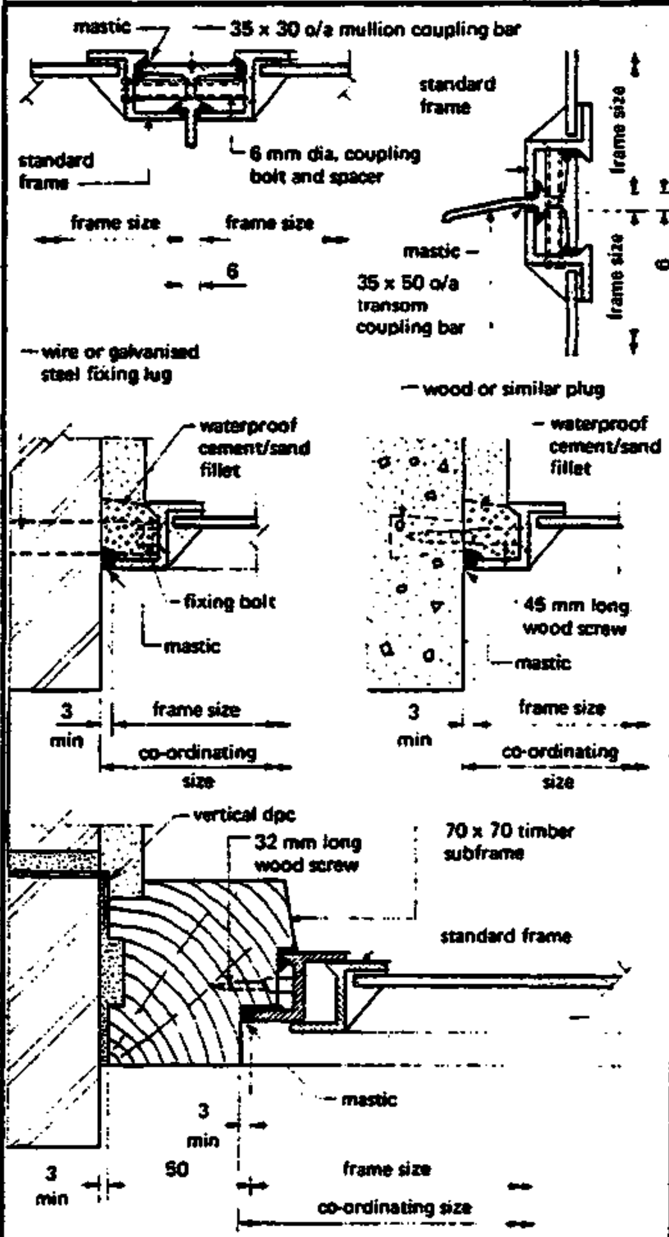

Steel window couplings and fixings

PLASTIC CASEMENT WINDOWS

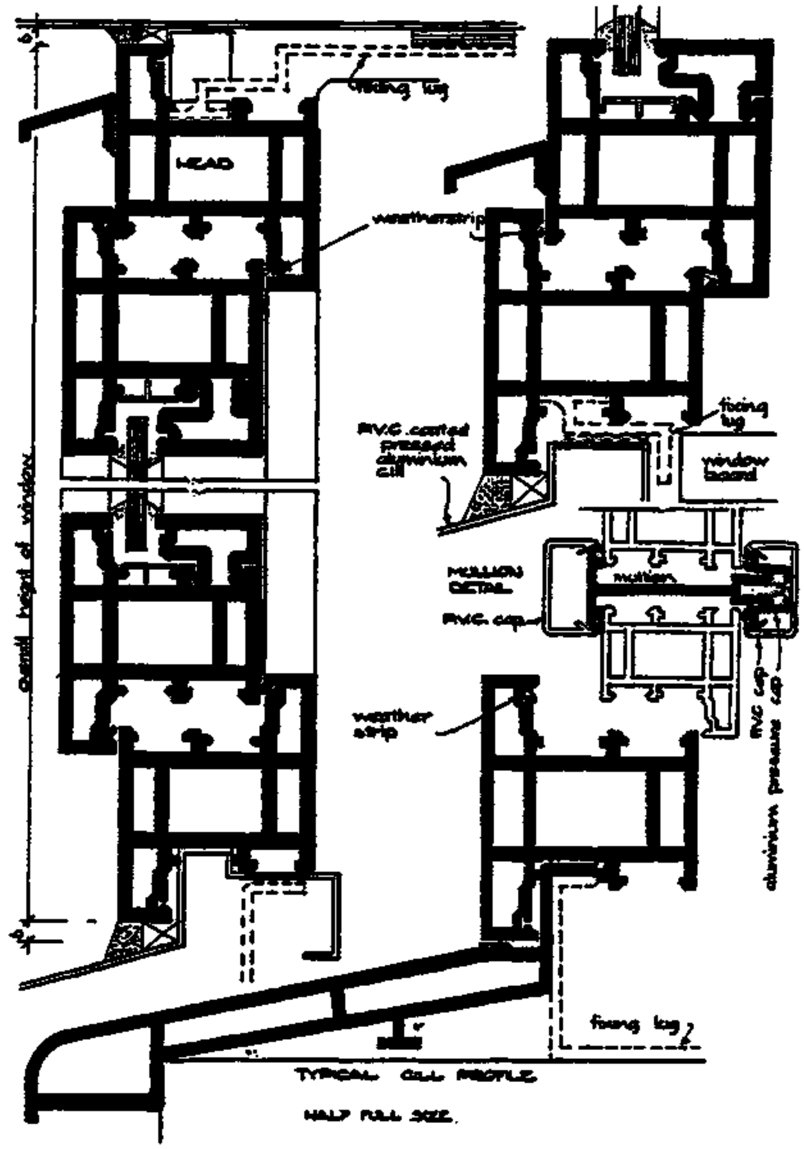

Plastic windows. Unplasticized polyvinyl chloride (U.P.V.C.) is now in demand for all types, including horizontal and vertical sliders, particularly in modern housing development. Glass is secured in position with rigid P.V.C. slip-on beads. Double-glazing units, up to 24 mm thick, can also be accommodated. Single units can be coupled together using mullions and transoms, as with other types. The profiles are normally supplied in light grey or white, Fig.

Glass-reinforced polyester resin (G.R.P.) is also used in window manufacture. It has excellent weathering properties and is impervious to insect and fungal attack.

BAY WINDOWS

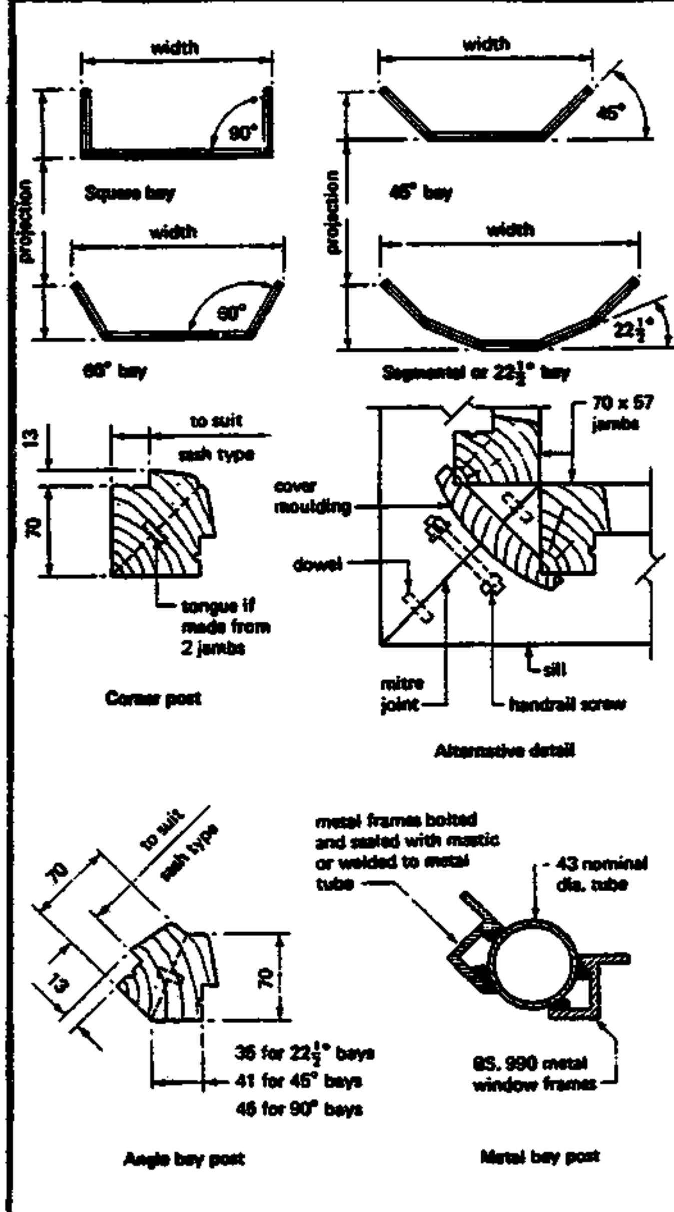

Bay window types and corner posts

- the main difference in detail is the CORNER POST, which can be made from the solid, jointed or masked in the case of timber and tubular for metal windows.
- Any roof treatment can be used to cover in the projection and weather seal it to the main wall

14.2.5 Bay Windows

= any window which prejects in front of the main wall line.
- various names are given to various plain lay layouts (ref. to fig.)
- Bay windows can be constructed of timber, and/or metal and designed with
  - casement or
  - sliding sashes:

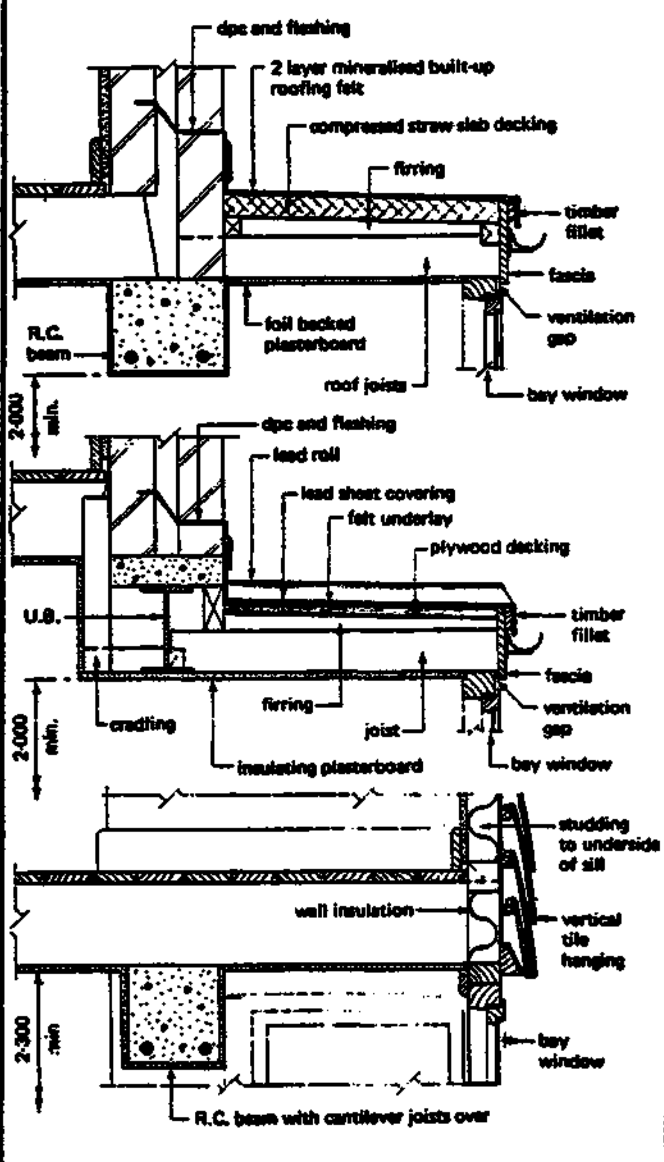

Bay window roofs and 2-storey bays

SLIDING SASH WINDOWS

14.2.6 Sliding sash windows:

VERTICAL

14.2.6.1 Vertical sliding windows (also called 'double hung sash windows'

- consist of sashes, sliding vertically over one another.
- Are costly to construct but are more stable than side hung sashes and have better control over the size of ventilation opening, thus reducing the possibility of draughts.

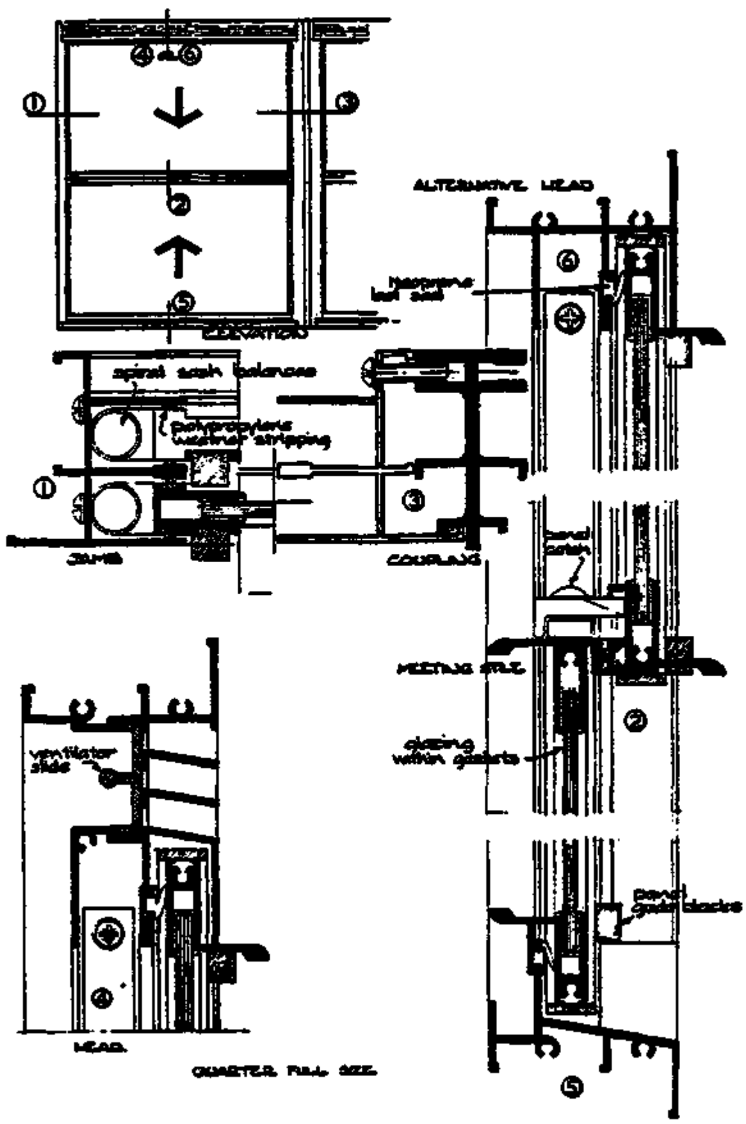

SLIDIND SASH WINDOWS

VERTICAL

- Two main types:
  1. Weight balanced type
  2. Spring balanced type
- No. 1 is the older method. The counter balance weights are suspended by cords and housed in a boxed framed jamb or mullion.
  No. 2 uses solid frames and needs less maintenance.

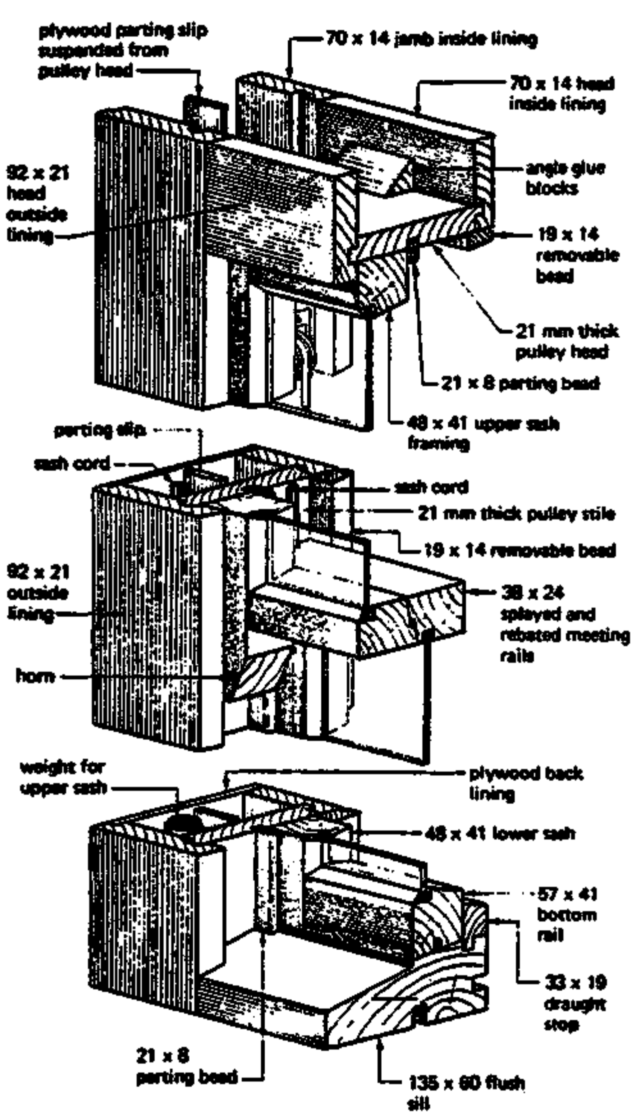

Double hung weight-balanced sash windows

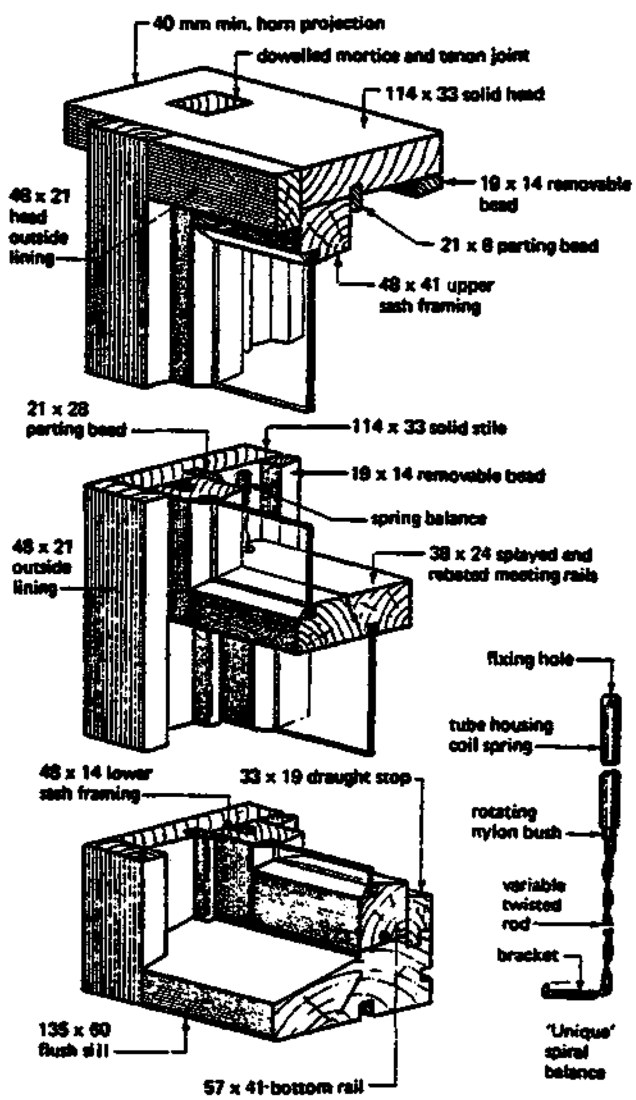

NB if 114 x 60 solid stiles are used balances can be housed in grooves within the stile thickness

Double hung spring-balanced sash windows

SLIDING SASH WINDOWS

HORIZONTAL

14.2.6.2 Horizontal sliding windows.

- consist of a window frame (wood or metal) with at least 2 sashes. One or both can be opened by sliding horizontally.
- The sashes are made to slide on wood/metal/or compressed fibre runners fixed inside the frame.
- Disadvantage: Sashes tend to jamb in the frame (especially if they are large).

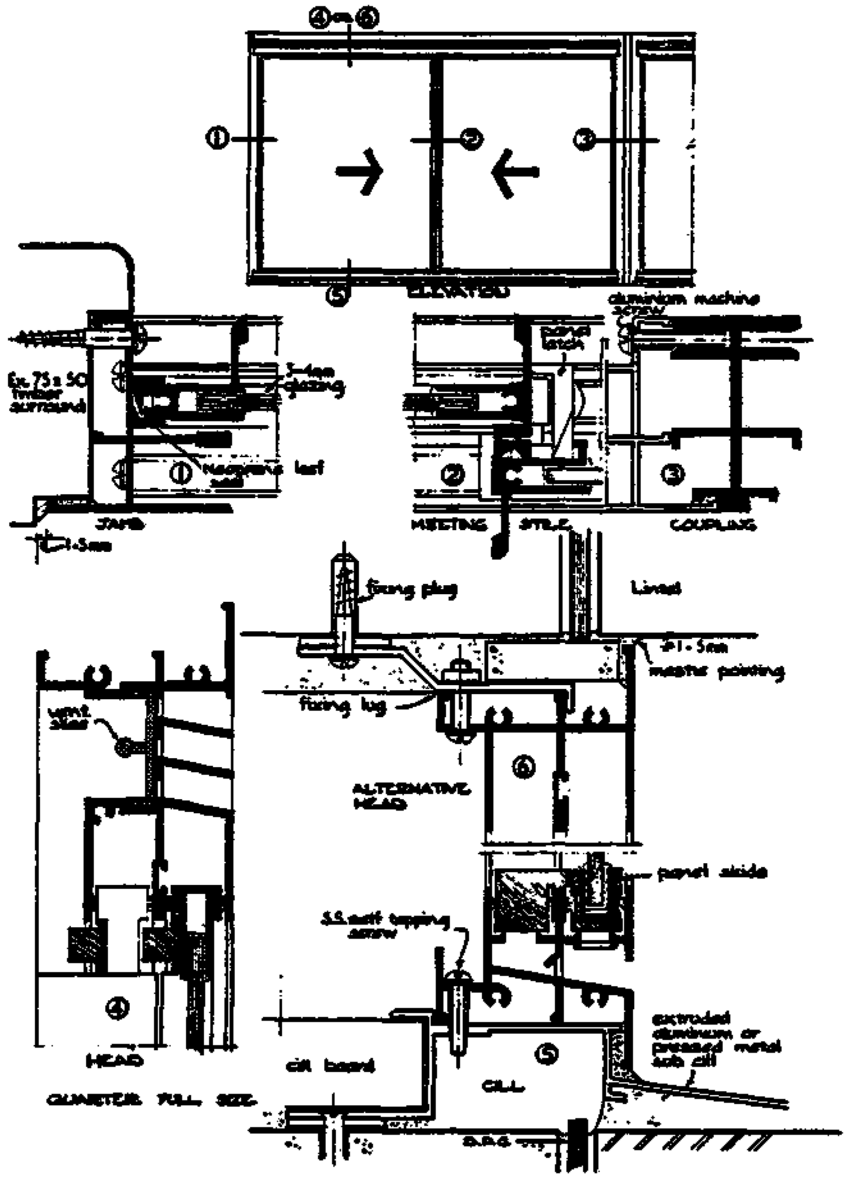

14. DOORS & WINDOWS compiled : D. VOLKE JAN. '83	WINDOWS	BUILDING CONSTR. LECTURE CET 8031/1 14.233

PIVOT WINDOWS

14.2.7 Pivot windows

- The basic construction of the frame and sash is similar to that of a standard casement frame and sash.
- The sash can be arranged to pivot
  - horizontally or
  - vertically

  on friction pivots housed in the jambs or in the sill and head.
- These windows give good adjustment for ventilation purposes.
- Both faces of glazing can be cleaned from the inside of the building.
- Disadvantages:
  - horiz. pivot: Ventilation in high buildings = hot air, which moves upwards along the facade is directed into the rooms.
  - vertic. pivot: (the same as casment windows opening to the inside) restrict the use of the rooms when opend.

TURN &.TILT WINDOWS

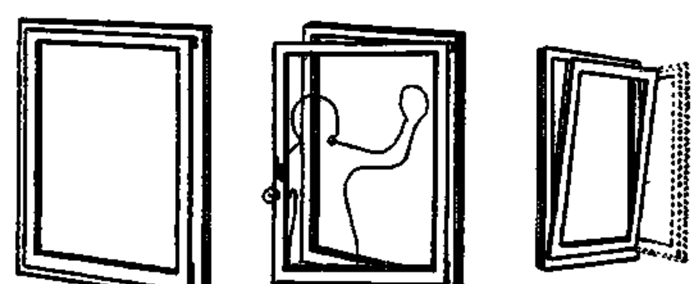

LOUVRES

14.2.8 Louvres

- Adjustable louvres are available in a number of sizes and patterns.
- A louvre blade on a jamb unit is screwed to a galvanized channel surround. The channels and louvres are supplied 'knocked down' and assambled on side.
- another alternative: 'selfmullion' (i.e. 2 jamb units with a spacer bracket between.

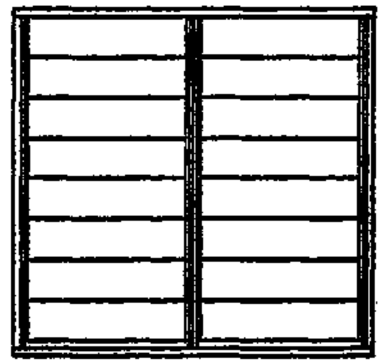

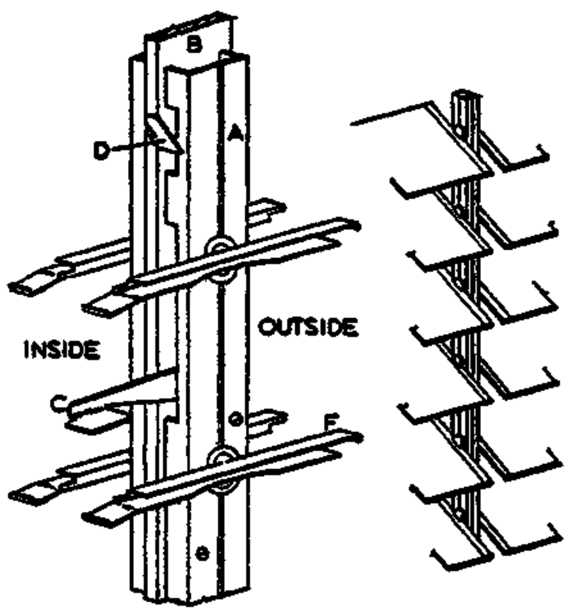

Typical glass louvres in aluminium carriers
A Pressed steel frame
B Glass louvre carrier
C Pressed steel stop

The glass ranges from 3 to 6mm plates depending on the size of the window; but in order to prevent breakage the glass should not be less than 5mm.

- 5mm glass blades should not be longer than 30"(762mm) length
- 6mm glass blades should not be longer than 36"(914mm).

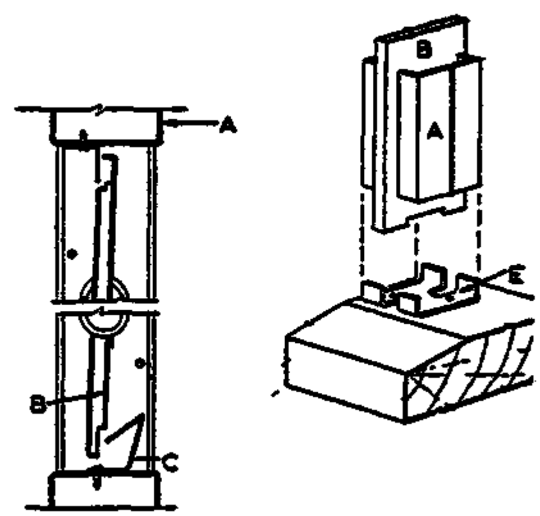

Mullion with steel core

A 1$\frac{3}{4}$ in × $\frac{1}{2}$ in (44 mm × 13 mm) jamb
B 2 in × $\frac{1}{4}$ in (51 mm × 6 mm) steel core
C Operator
D Lock (sometimes combined with the operator)
E Core clip
F Blade carrier

- For high windows, steel mullion strips are available to which the alluminium jamb units may be fixed.
- The glass blades are normally 4" (or 10cm) and 6"(or 15cm) wide, although 9"(23cm) blades are often used.

LOUVRES

This is exceeded in sheltered positions. The lap between 15 cm blades is 12mm and between 23 - 25 mm.
- The height of self-supporting mullion varies according to the length and width of the glass blades (i.e. 6" or 9") and the max wind velocity expected.
- Where the mullion spacing is small (18" or 46 cm) twenty -one louvres with 6" blades may be carried.
  But with a spacing of 4'(1.22m) only fourteen louvres may be carried.

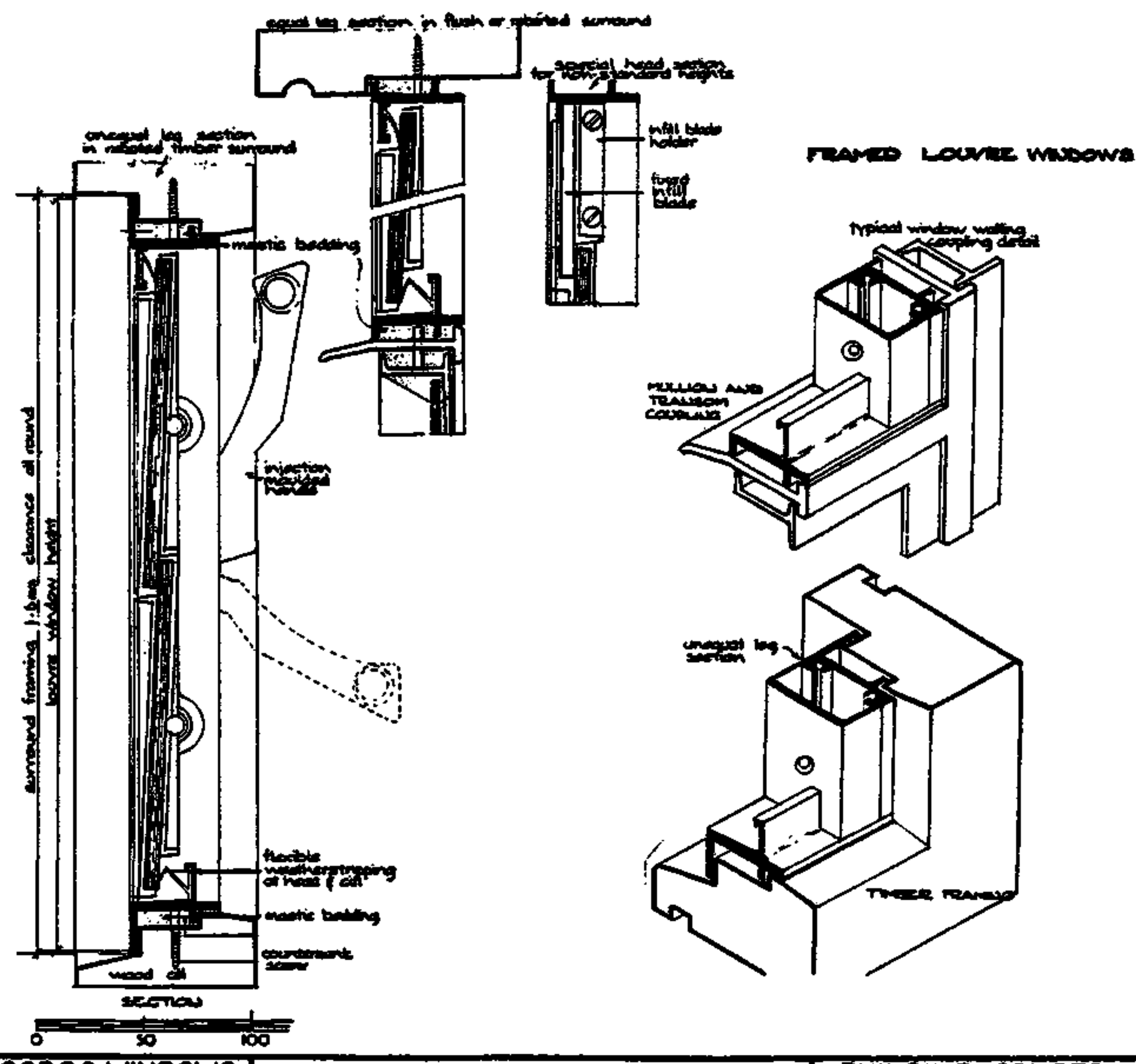

LOUVRES

- With tall windows the jamb units may be easely joined, although care has to be taken to marry the louvres accurately.
- Standard heights of windows for louvres with 15 cm blades range from 12 1/2 in (with 2 blades) to 78 1/2 in (198,4cm) with 14 blades (also with self - mullions, if required)
- Operating handles or 'operators' are usually supplied for every six blades, although this varies with different makes.
- Locking catches may be either seperate (as shown) or incorporated with the operator.

Advantages:
- adaptability to existing openings
- stand. heights to fit any size of opening
- ease of operation
- neat oppearance
- free air flow   etc.

Disadvantages:
- not as secure as fixed wood or metal louvres (glass baldes are easily removed)
- not water tight
- often mullions are not fixed plumb nor the blades are truly horizontal. Poor fixing causes breakage!
- They frequently slip out of their clips.

But there is no doubt, that their advantages far outweight their disadvantages(especially in hot-humid areas like i.e. the coast region in TAN).

GLASS and GLAZING

14.2.9 Glass and Glazing

14.2.9.1 Glass

- Drawn clear sheet glass

- There are 2 principal methods of producing drawn clear sheet glass
  (1) vertical drawing from a pool of molten glass which, when about 1m above the pool level, is rigid enough to be engaged by a series of asbestos rollers, that continue-to draw the ribbon of glass up a tower some 10 m high, after which the ribbon is cut into sheets and washed in a dilute acid to remove surface deposits.
  (2) the glass is initially drawn in the vertical plane but it is turned over a roller so that it is drawn in the horizontal direction for some 60 m and passes into an annealing furnace, at the cold end of which it is cut into sheets.
- it is a transparent glass (85% light transmission) with a fire finished surface, but because the two surfaces are never perfectly flat or parallel there is always some distortion of vision and reflection.

B.S. 952 recommends 3 qualities for sheet glass:
1. Ordinary glazing quality (O.O.) to be used for general glazing purposes.
2. Selected glazing quality (S.G.Q.)for hight grade work (such as cabinets).

- Generally 6 thicknesses are produced(from 2-6 mm thick). The 2 mm thickness is not being recommended for general glazing.

- Float glass

- is a transparent glass (85% light transmission) and is a truly flat glass with undistorted vision.
- it is formed by floating a continuous ribbon of molten glass over a bath of liquid metal at a controlled rate and temperature.
- a general glazing quality and a selected quality are produced in six thicknesses (from 3-12mm).

- Rolled and rough cast glass

- is a flat glass produced by a rolling process
- generally the glass produced in this manner is translucent, which transmits light with varying degrees of diffusion, so that vision is not clear.
- a wired transparent glass with 80% light transmission is produced generally in one thickness of 6mm.
- the glass is made translucent by rolling on to one face a texture or pattern which will give 70-85% light transmission.
- Rough cast glass has an irregular texture to one side.
- wired rough cast glass comes in 2 forms:

  (a) georgian wired (12mm square mash elt.-welded wire reinforcement or
  (b) hexagonally wired which is reinforced with hexagonal wire of approx. 20mm mese.
- rouge cast glass is produced in 5,6 and 10 mm thickness and is made for safety and fire resistante glazing purposes.

GLASS and GLAZING

14.2.9.2 Glazing

(a) Glazing without BEADS
- is a suitable method for general domestic window and door panes.
- the glass is bedded in a compound and secured with sprigs, pegs or clips and fronted with a weathered surface putty.
- putty is glazing, compound which will require a protective coating of paint as soon as practicable after glazing.
- two kinds of putty are generally used:
  1. Linseed oil putty: for use with primed wood members and is made from linseed oil and whiting.(B.S.544)
  2. Metal casement putty:for use with metal or non-absorbent wood members and is made from refined vegetable drying oils and finely ground chalk.
- The glass pane should be cut to allow a min. clearance of 2 mm all round for both wood and metal frames.
- Sufficient putty is applied to the rebate to give at least 2mm of back putty when the glass is pressed into the rabate, any surplus putty being stripped off level or at an angle above the rabate.
- The glass should be secured with sprigs or clips at not more then 440mm centres and finished off on the front edge with a weathered putty-fillet, so that the top edge of the fillet is at or just below the sight line.

(b) Glazing with BEADS
- is generally applied to good class joinery
- the beads should be secured with
  - panel pins or
  - screws

  for hardwoods it is usual to use cups and screws.
- The glass is bedded in a compound or a suitable glazing felt mainly to prevent damage by vibation to the glass
- Beads are usually mitred at the corners to give continuity of any moulding.
- Beads for metal windows are usually supplied with the sourround or frame, and fixing of glass should follow' the manufacturers instructions.

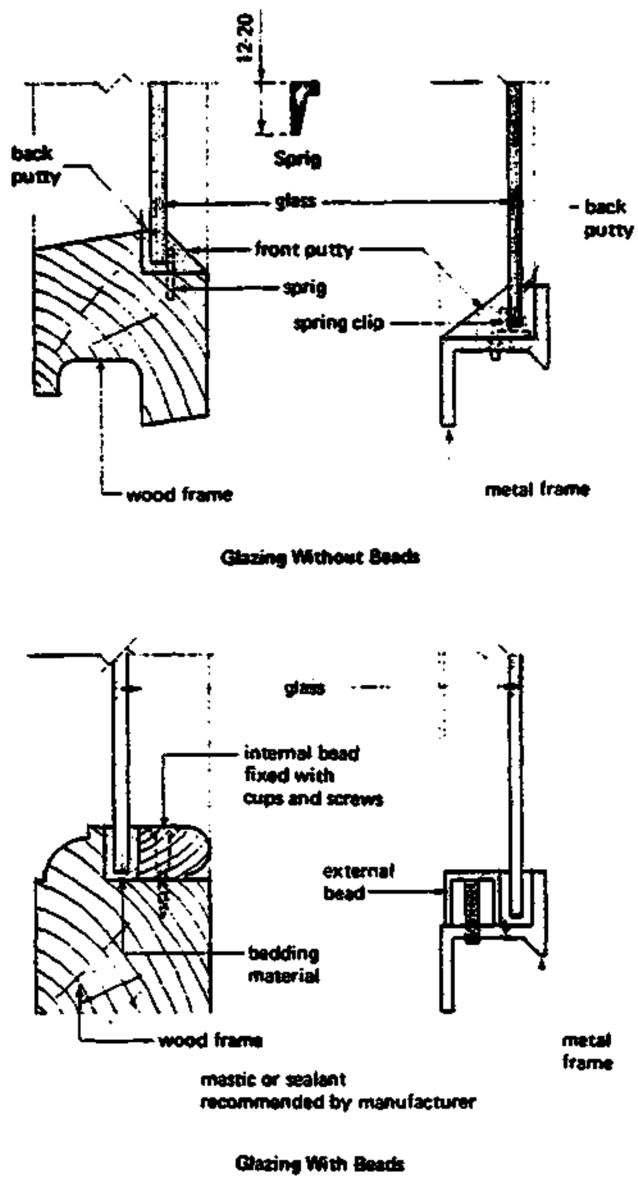

Glazing details

MOSQUITO SCREENING

14.2.10 Mosquito screening
(Fly screens)

- mass production of copper wire and nylon screens have made complete proofing very common.
- Green-tinted gauze is available which reduces glare considerably.
- Nylon gauze (although cheap) is not as transparent as copper and tends to produce a foggy outlook. Such sceens are not designed to resist damage caused by fly swatting and should be left undisturbed when once in position.
- Fibre glass is an excellent material for screening. It will resist corrosion and rust and will not stain walls and sills.
  This material
  + does not deteriorate in industrial areas,
  + is not affected by mildew
  + resists salt air and
  + will withstand heat up to 150°C before becoming soft.
  + it provides good fire protection.
- When fly screens are inteded for glass-louvre windows, it is necessary to make the window frame wide enough to clear the louvre when fully open (the screen may be fixed direct to the frame).
- removable screens (secured by wing nuts) are used where mosquitos or other pests occur only at certain times of the year.

  A neater solution, however, lies in the use of roll-up insect screens which may be fixed permanently.
  These consist of light alu-frames with fibreglass screens which roll up into a head-box (= 60mm²).
  They may be fixed to either wood or metal frames.

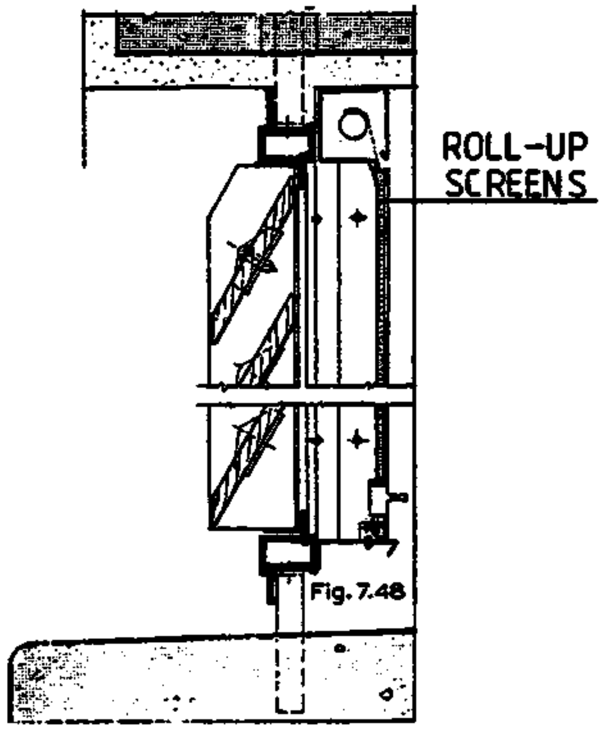

Fig. 7.48

- Flat insect screens in alu-frames are also available
  - fixed
  - hinged or
  - sliding.
- Gauze doors may be made of timber framing or in alu-frames.
  + When such doors are used, they should be arranged to open outward, if possible, otherwise disturbed insects on the screen will tend to fly inwards as the door is opened.
  + The doors may be installed on the face, or in the reveal and should not interfere with the normal door.

SUN-BREAKERS

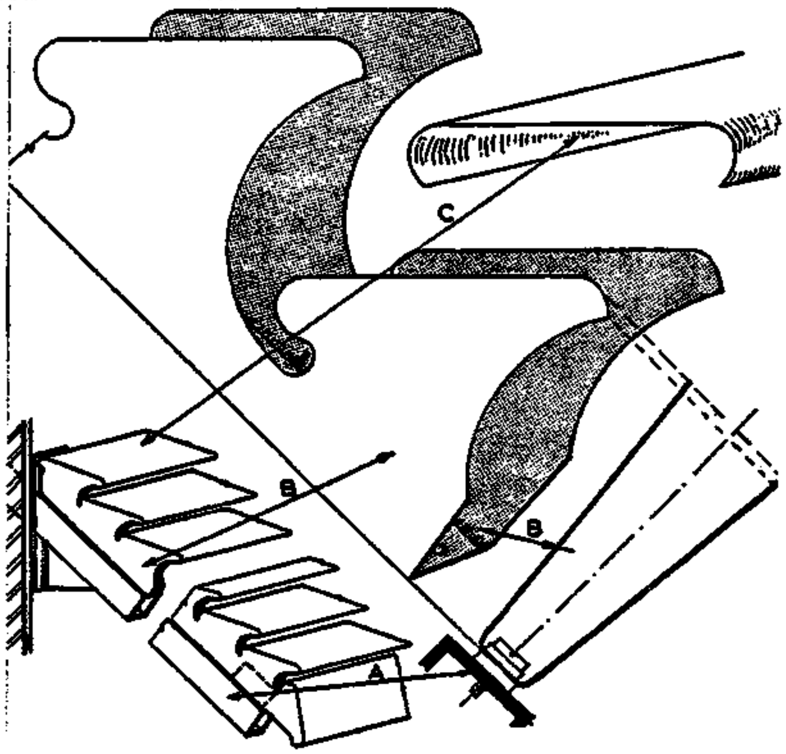

Aluminium sun-breakers
A Steel box section (size to suit span)
B Stringer (size and shape to suit climate)
C Aluminium panels (clip-on)

14.2.11 Sun-breakers

- Sun control is frequently necessary and many diff. systems have been developed to effect this, such as
  - pierced panels of brick-work or blockwork
  - overhanging eaves
  - canopies
  - painted or coloured glass
  - metal louvres
  - vertical slats of concrete, extending the full height of the building, arranged at a suitable angle to de-feat direct entry of sun-light.
- Before adequate sun control can be achieved, several fac-tors require consideration:
  - orientation of the buil-ding
  - the latitude of the country
  - the hours of sunlight against which protection is needed
  - the position of the building regarding the prevailing winds and rains.

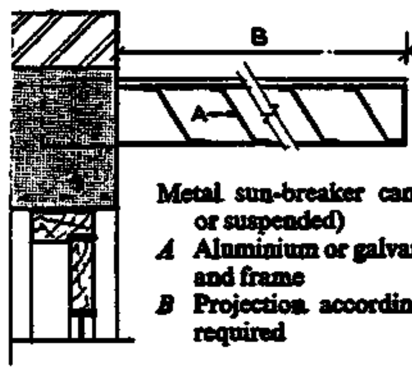

Metal sun-breaker canopy (cantilevered or suspended)
A Aluminium or galvanized steel blades and frame
B Projection according to shade angle required

Aluminium fixed sun panels (also in pressed steel)
A Up to 4 ft (122 cm), dimensions as required
B Up to 14 ft (425 cm)

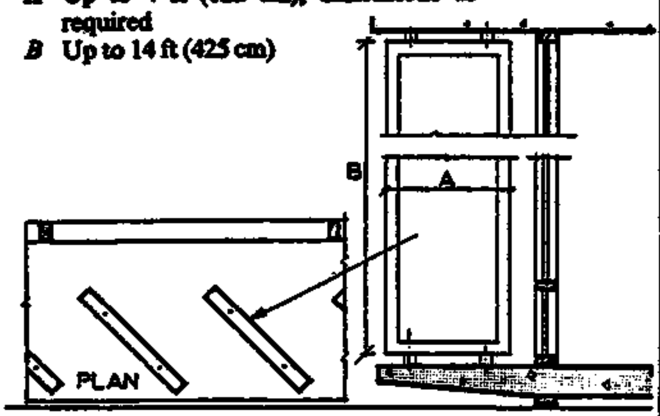

SUN-BREAKERS

- Sun breakers can be
  either fixed or
  pivoted
  either horizontal or
  vertical
  If pivoted they can be
  either manually or
  mechanically
  operated.
- pivoted sunbreakers are very useful, as the area of sun surface can be considerably reduced. They can also exclude rain.
- For determining the angle and size of sunbreakers various charts and other aids are available (It is advisable to deal with methods of determining shadow angles in building openings in order to design sunbreakers, which are effective at all seasons and any hour of the day.
- Sunbreakers are obtainable in many styles and patterns.
- A common method consists of a V-shaped stringer shaped to take alu-strips. The stringers are produced at diff. angles to suit the required latitude. They are adoptable to a wide variety of uses (including cladding panelling, sun-louvres, canopies, roofs etc).
- Another design is that of pressed steel sunbreakers. A similar section will permit ventilation but is shaped to act as a gutter which prevents the entry of rain.
- A vertical sun panel can be made in a variety of heights, widths and thicknesses. This can be made in pressed steel, or aluminium and is designed to resist high wind. The angle of fixing is designed to give maximum sun protection.

Adaptors for metal sun-breakers
A Standard fixed metal casement
B Adaptor frame of pressed steel
C Ventilated pressed steel movable sun-breakers
D Pivot
E Operator ring

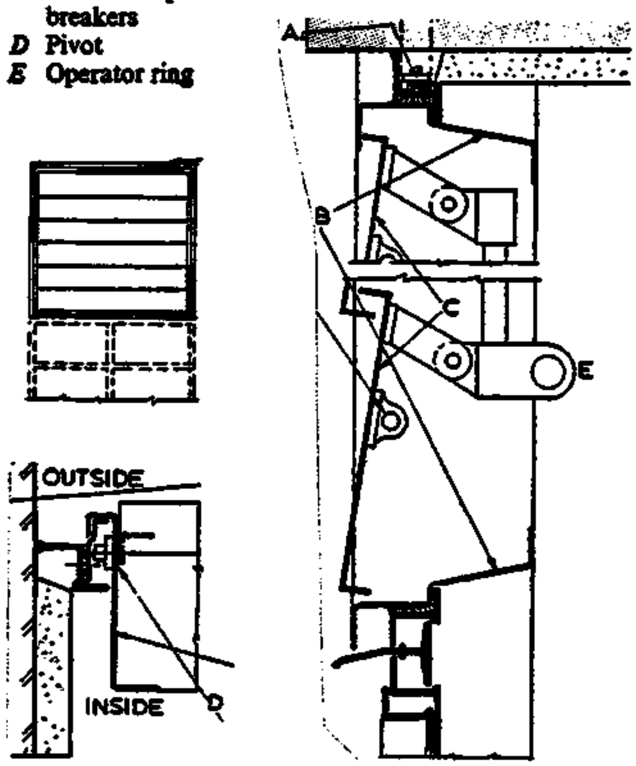

Section through a typical balcony
A Wood-louvred sun-breaker (height and angle of louvre as required)

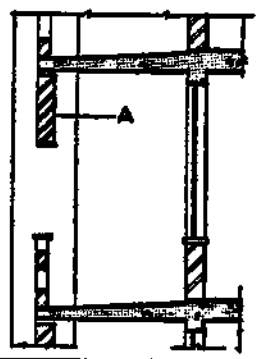

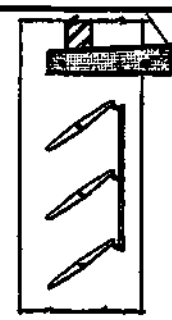

Pivoted aluminium sun-breakers

SUN-BREAKERS

- Rolling window shutters are frequently used in some countries.
  These consist of fine slates running vertically in guide channels which themselves can be pivoted to clear the window and let in light and air.
- Sund-blinds of the venetion type are extensively used where no other method is available or where permanent control is not warranted.
- An example showing plan + section of a pressed steel sun-breaker set in a frame, adapted to fit a standard metal window.
  A bank of 6 louvres is pivoted and linked to one operator.
- The normal type of wood louvre in a frame is supported by concrete sun 'fins' at approx. 3 m centres.
- Aerofoils may also be used, although they are more costly. They are insulated and can be pivoted to give maximum protection. They can be made to various dimensions and can be fixed either horizontally or vertically.
  When closed, they also give wind and rain protection.
- Vertical alu-sun-breakers.
  These are designed to fit standard blade carriers by using an adapter.
  In order to prevent twist between the top and bottom blade carriers, a torsion bar is required. This is fixed in the nearest carrier to the operator.

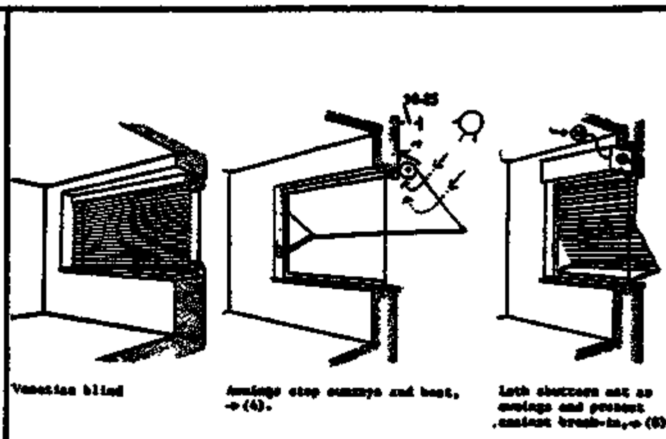

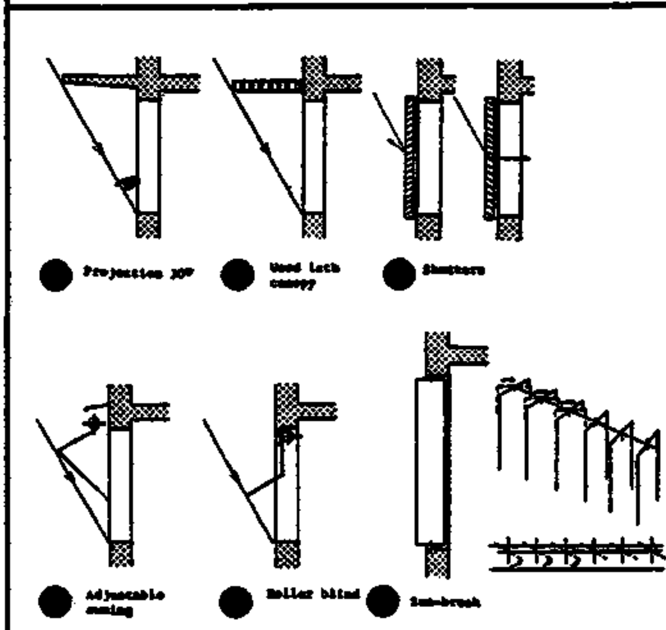

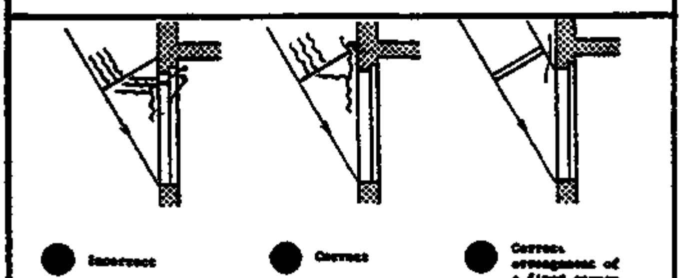

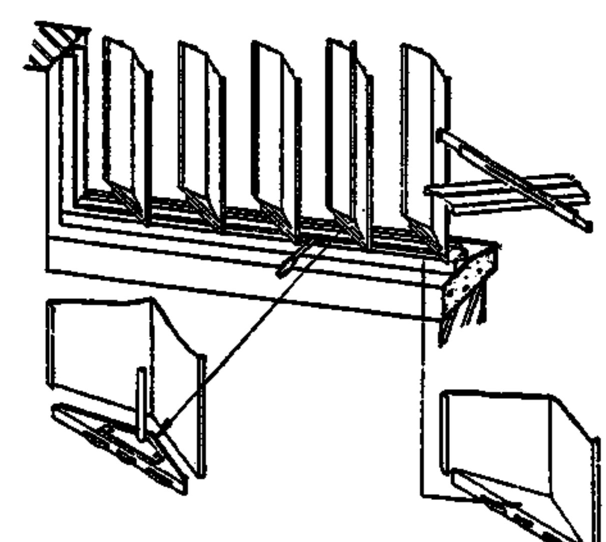

Vertical metal sun-breakers

14. DOORS & WINDOWS	WINDOWS	BUILDING CONSTR.
compiled : D. VOLKE		LECTURE
JAN. '83		CET 8031/1.14.243

TCA TECHNICAL COLLEGE ARUSHA
CHUO CHA UFUNDI ARUSHA

CIVIL ENGINEER. DEPARTMENT

IRON MONGERY

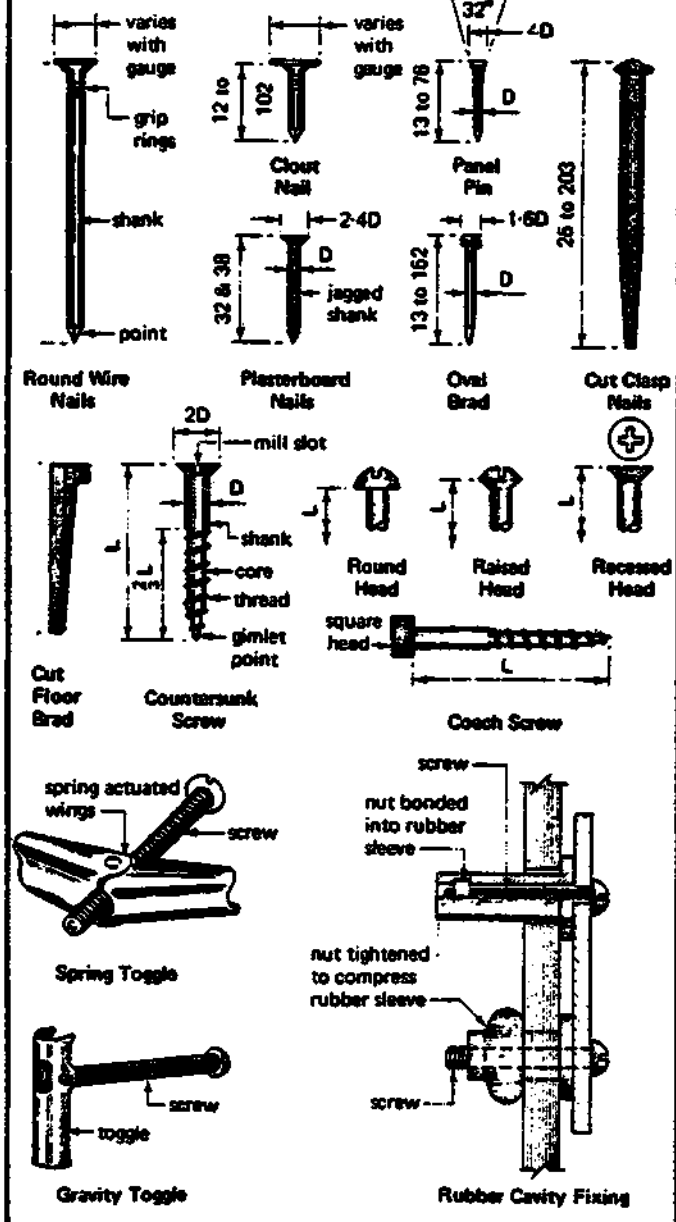

Nails, screws and cavity fixings

14.3 Iron Mongery

- Iron Mongery or HARDWARE covers a wide field, so that we have to concentrate on those items only which are in common use (in Tanzania) in the field of design and construction, such as:
  14.3.1 Hinges
  14.3.2 Locks and Latches
  14.3.3 Miscellaueous

HINGES

14.3.1 HINGES

are made for hanging doors, casements and ventlights. There are different types available.

- Most commenly used are the cheap <u>pressed steel butt hinges</u> They are made from steel strip which is cut and pressed around a PIN. The PIN is fixed inside the Kunckle.
- <u>Loose pressed steel but hinges</u> have the advantage that by taking out the loose pin the door can be taken off its hinges whereas with standard steel butts a door can only be taken off by unscrewing its hinges from the frame.
- <u>Double pressed steel butt hinges</u> are made of two strips of steel, each folded back on itself around the pin. They are stronger than ordinary steel butt hinges and are used for heavy doors.
- <u>cast iron butt hinges</u> are heavier and more expensive than steel butts of similar size and shape; but have longer useful live, as the bearing surface of the kunckles are more resistand to wear.
- <u>Brass butt hinges</u> are more expensive than steel or cast iron hinges, used mainly for decorative purposes.
- <u>Steel skew butt hinges</u> (rising butt) The bearing surfaces of the kunckles are cut on the skew, so that, as the hinge opens, one butt rises. These hinges are used for hanging doors and are fixed so that the flap screwed to the door rises as the hinge opens.
  <u>Purpose</u>:- To ride over carpets
  - self closing (fire cheded)
- <u>Steel tee hinges</u> consist of a rectangular steel flap and a long tail with knuckles around a pin.

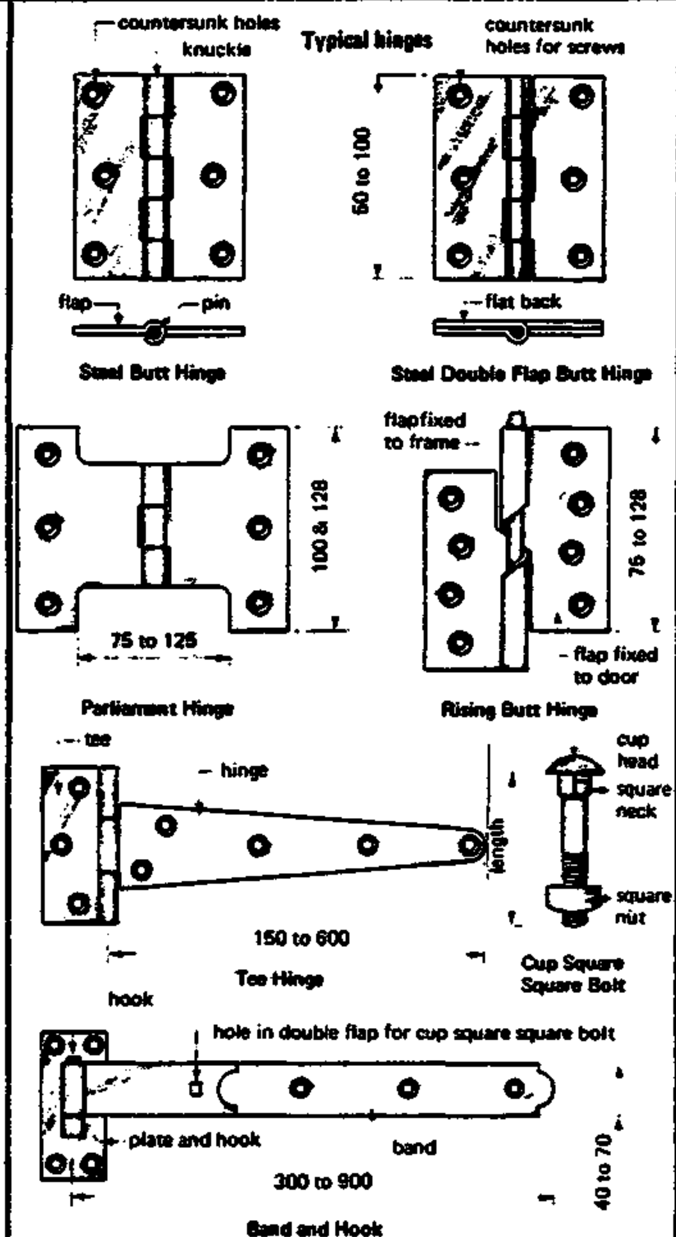

The flap is fixed to the frame and the tail to the door. They are used mainly for matchboarded doors, as they assist in bracing the ledges against sinking.

- <u>Hook and band hinges</u> consist of a rectangular steel plate in which a pin is fixed and a steel band folded around the pin. They are made of heavier steel than tee hinges and are used for hanging heavy doors such as garage and workshop doors.

- Projecting steel windows
  Metal casements are often hung on projecting steel hinges.
  Reason: To make it possible to clean the glass in the casement on both sides from within the building.
- Casements are secured with a single pivoted cock spur type fastener and a peg stay is fixed to the frame and casement so that the casement can be kept open in windy weather.
- Ventlights are hung on ordinary steel hinges and are fitted with a peg stay similar to that used for casements.

HINGES

LOCKS and LATCHES

14.3.2 Locks and Latches

- Lock: any device of wood or metal attached to a door which can be used to keep it closed by the use of a loose key
- Latch: any device of wood or metal attached to a door to keep it closed and which can be opened by the movement of a handle lever or bar.

Mortice Lock
is the mechanism which is most used today. It comprises
a latch and
a bolt.
The former being operated by handles; the latter by means of a loose key.
Mortice locks:
Because they fit in a mortice cut in the door, so that the lock case is hidden.

Rim Lock:
is screwed to one face of a door. They are not much in use today, as they spoil the appearance of the door. Sometimes they are used as an additional lock for safety purposes.

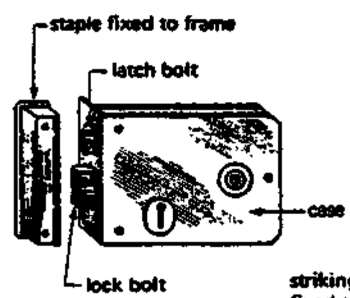

Rim Lock

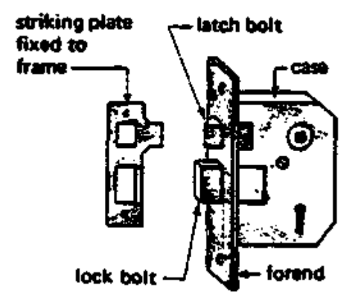

Mortice Lock

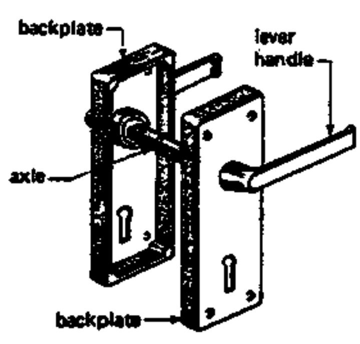

Lever Mortice Furniture

LOCKS and LATCHES

Cylinder night latch:
consists of a metal cylinder which is housed in a metal case which is fixed to the inside face of a door. The cylinder fits in a hole in the door. The latch can be opened by a knob from inside. The levers inside the cylinder are arranged in a way that only the key cut to fit a particular cylinder will open its latch. These latches are commonly used for front doors to houses and flats.

Mortice dead lock:
consists of a case inside which is a single bolt shich can only be operated by a loose key. These locks are fitted to a mortice in the door and the lock bolt shoots into a hole in a lock plate fixed to the door frame. These locks are used in addition to cylinder night latches or locks for entrance doors to houses and flats, because they are more difficult to force or prise open then cylinder night latches.

Cylinder Lock:
has a safety-mechanism which is separate from the lock mechanism. It can be fit in an ordinary mortice or rim lock in order to take over the function of an ordinary loose key.
The functioning of a cylinder lock depends on the principle, that while unlocking with the heavily profiled key, a number of pins (which are under spring-compression) is brought in the only one position, which allows a turn of the cylinder core, on which the lock bit is fixed.
The quality of the cyl.-lock depends on the number of pins (=number of grooves of the key bit). The min. No. should be 5 pins, in order to provide a safe lock.

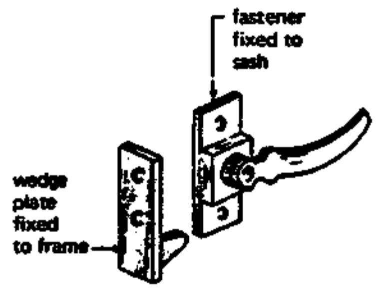

Casement Fastener

Casement Stay

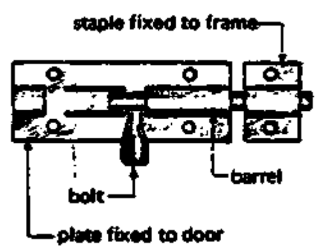

Barrel Bolt

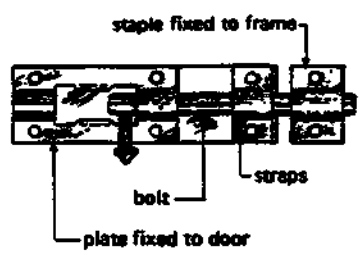

Tower Bolt

•REPETITION•• exercises ••REPETITION•

Try to answer the following questions and use sketches where-ever necessary and possible

14.1 Doors

What is the function of a DOOR?
Which materials may be used for construction?
Which methods may be used for construction?

Compare EXTERNAL DOORS and INTERNAL DOORS and describe the differences!

What are PURPOSE MADE DOORS and where are they mainly used for?

Define the following terms by using sketches for illustration.

- horn
- toprail
- glass panel
- glazing bars
- frieze rail
- solid panel
- lock o middle rail
- stile
- intermediate rail
- muntin
- bottom rail

Explain in the form of sketches the basic types of PANELLED and GLAZED WOOD DOORS.
What are dowelled joints and what are mortice and tenon joints?(use sketches for explanation!)

Explain in the form of sketches methods of construction of FLUSH DOORS.

What are FIRE-CHECK FLUSH DOORS?

Explain in the form of sketches methods of construction of MATCHBOARDED DOORS.

Sketch and explain the construction of TIMBER DOOR FRAMES as well as for METAL DOOR FRAMES and compare their advantages and disadvantages.

Sketch a typical DOOR LINING

14.2 WINDOWS, GLASS and GLAZING

What are the primary functions of WINDOWS?
Which materials may be used for construction?
Which methods may be used for construction?

Where do the regulations K1,K2,K3 and K4 deal with?
What are the basic requirements for ventilation openings?

Sketch an elevation and sections of a TRADITIONAL CASEMENT WINDOW and give brief explanations!

Sketch an elevation and sections of a STANDARD WOOD CASEMENT WINDOW and give brief explanations!

Sketch an elevation and sections of a STEEL CASEME NT WINDOW and give brief explanations!

Explain BAY WINDOWS and describe the main difference in details to casement windows (use sketches for illustration)

REPETITION exercises REPETITION

Write notes on SLIDING SASH WINDOWS and explain (by using sketches for illustration) VERTICAL and HORIZONTAL sliding windows.

What are PIVOT WINDOWS?

Write notes on LOUVRES, compare advantages and disadvantages and use sketches for illustration.

Which methods of producing
- DRAWN CLEAR SHEET GLASS
- FLOAT GLASS
- ROLLED and ROUGH CAST GLASS

do You know?

There are two main ways of GLAZING. Describe both and compare their advantages and disadvantages (use sketches for illustration)

Write notes on MOSQUITO SCREENING

List different SUN-BREAKER systems!
Classify the different types of SUN-BREAKERS and give brief explanations about their construction. (Use sketches for illustration whereever possible!)

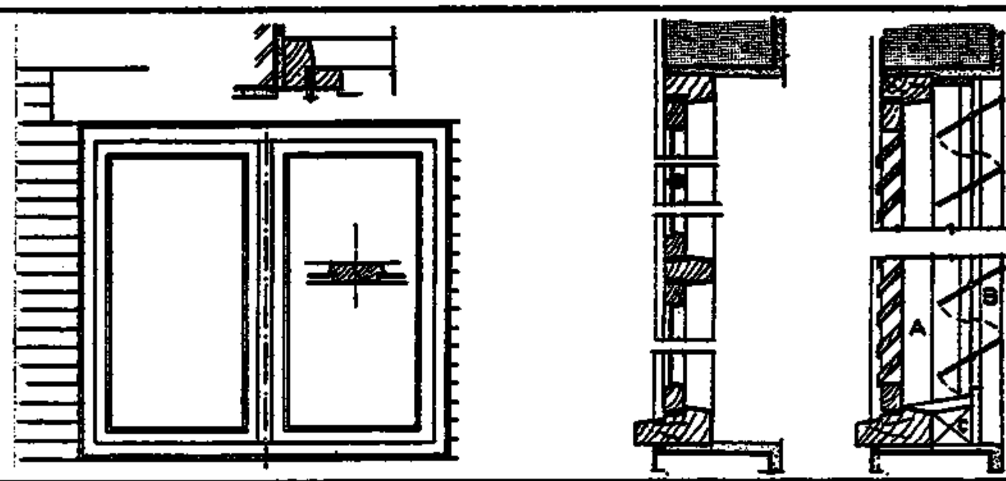

14.3 IRON MONGERY

Define the following terms and use sketches for illustration:

- pressed steel butt hinges
- loose pressed steel butt hinges
- double pressed steel butt hinges
- cast iron butt hinges
- brass but hinges
- steel skew butt hinges
- steel tee hinges
- hook and band hinges
- projecting steel windows
- mortice lock
- rim lock
- cylinder night latch
- martice dead lock
- cylinder lock

SMALL ENGINE

1. Fuel system
2. Ignition system
3. Speed control system
4. Valve mechanism
5. Crancshaft mechanism
6. Lubrication system
7. Cooling system
8. Starting system
9. Exaust system

What this Instruction Material wants:	What this Instruction Material does not want:
- to be easy understadable	- to replace a book
- to be job related	- to substitute the teacher
- to support the teacher in his work	- to teach unnecessary subject matter
- to create student activity	

Help to teach and learn efficiently

- o This instructional material is developed by the Thai-German Teaching Aid Centre in cooperation with the Technical College Nongkhai.

- o The student should have preknowledge about the principle of 4-stroke internal combustion engine.

- o The Information, specially about maintenance and repair is based mainly on the Honda engines G 150 - G 200 and GX 120 - GX 160.

- o The teaching method, which should be used, is the "questioning technique". Please do not only lecture!

<u>The Instructional Material Package (IMP) contents the following elements:</u>

1. List of objectives
2. Information sheets
3. Task sheets
4. Job sheets
5. Teaching aids (Transparencies, models, e.g.)
6. Solutions

1. A list of objectives shows the teacher what the student should know after the lesson.

2. Information sheets show pictures with short explanations of the subject matter. These information sheets should be given to the student after the lesson as a summary. Information about repair and maintenance should be given briefly before starting the work prescribed in the Job sheets.

3. Task sheets help the teacher to check the learning progress. They should be used at the end of one period. It is necessary to discuss the solutions with the studends. Please do not use them as a test.

4. The Job sheets are showing the student the right sequence of working steps.
   The Information sheets about maintenance and repair can be used like a manual during work.

5. Teaching aids make the subject matter better understandable and motivate the students.

6. Solutions for the task sheets

Content

The student should be able to ...

Fuel system

1.1 Components of fuel system

1. Name various components and their functions of fuel system
2. Describe about fuel delivery from fuel tank to carburetter

1.2 Fuel tank

3. Tell components of fuel tank
4. Tell function of fuel tank

1.3 Fuel filter

5. Tell components of fuel filter
6. Tell functions of fuel filter

1.4 Air filter

7. Tell various types of air filter
8. Tell features and characteristics of the wet-type air filter
9. Explain principle of the wet-type air filter
10. Tell advantages and disadvantages of the wet-type air filter
11. Tell features and characteristics of the dry-type air filter
12. Explain principle of the dry-type air filter
13. Tell advantages and disadvantages of the dry-type air filter

1.5 Carburetter

14. Explain principle of carburetter
15. Tell various types of carburetter
16. Tell internal construction of the side draft carburetter
17. Tell functions and components of the floating circuit
18. Explain principle of the floating circuit
19. Tell functions and components of the idle circuit
20. Explain principle of idle circuit
21. Tell functions and components of full throttle circuit
22. Explain principle of full throttle circuit
23. Tell functions and components of choke unit
24. Explain principle of choke unit

1.6 Repair and maintenance

25. Inspect any leakage of the fuel tube
26. Clean fuel tank correctly
27. Clean air filter correctly
28. Dismantle and reassemble carburetter correctly
29. Inspect components of carburetter for wear
30. Set the float correctly
31. Adjust the idle mixture correctly
32. Adjust the idle speed correctly

2. Ignition system

2.1 Basic principle

1. Explain basic principle of ignition system used in small engines.
2. Tell various types of ignition system used in small engines

2.2 Contact breaker ignition system

3. Tell name and function of various parts of the contact breaker ignition system.
4. Explain principle of the contact breaker ignition system.

2.3 Capacitor discharge ignition system (CDI)

5. Tell name and function of various parts of the CDI system
6. Explain principle of the CDI system.
7. Tell advantages and disadvantages of the CDI system

2.4 Transistor ignition system

8. Tell name and function of various parts of the transistor ignition system.
9. Explain principle of transistor ignition system.
10. Tell advantages and disadvantages of the transistor ignition system.

2.5 Repair and maintenance

11. Remove and reassemble various parts of ignition system.
12. Check conditions of spark plug.
13. Clean and set electrode gap of spark plug correctly.
14. Check ignition coil correctly.
15. Check CDI and transistor ignition module correctly.
16. Check condenser correctly.
17. Set contacting point gap correctly.
18. Adjust ignition timing correctly.
19. Adjust clearance between ignition coil and magnetic fly-wheel correctly.

3. Speed control system

3.1 Governor

1. Tell the task of a gpverner

3.2 Types and function of governers

2. Tell various types of speed control systems.
3. Explain principle of pneumatic governor.
4. Explain principle of mechanical governor.

3.3 Repair and maintenace

5. Remove/refitting pneumatical and mechanical governer
6. Adjust pneumatical and mechanical governer

4. Valve mechanism

4.1 Functions of valve mechanism

1. Tell functions of valve mechanism.

4.2 Types and principle of valve mechanism

2. Tell various arrangements of valve.
3. Explain principle of overhead valve engine.
4. Tell advantages and disadvantages of the overhead valve engine.
5. Explain principle of side valve engine.
6. Tell advantages and disadvantages of side valve engine.

4.3 Compression-reduction mechanism

7. Tell purpose of compression-reduction mechanism
8. Tell various parts of compression-reduction mechanism.
9. Tell function of various parts of compression-reduction mechanism.
10. Explain principle of compression-reduction mechanism.

4.4 Repair and maintenance

11. Remove-reassemble cylinder head.
12. Remove-reassemble valves.
13. Measure length of valve spring.
14. Check squareness of valve spring.
15. Check strength of valve spring.
16. Measure diameter of valve stem.
17. Check straightness of valve stem.
18. Check valve face, margin and valve stem.
19. Measure width of valve seat.
20. Use valve seat cutter correctly.
21. Grind valve correctly.
22. Measure bore of the valve guide.
23. Remove and refit valve guide.
24. Adjust valve clearance correctly.

5. Crankshaft mechanism

5.1 Components and functions

1. Tell various parts of crankshaft mechanism
2. Tell various types of piston rings.
3. Tell functions of piston rings.
4. Tell functions and components of piston, connecting rod and crankshaft.

5.2 Repair and maintenance

5. Test compression, and tell their specification.
6. Remove and reassemble crancshaft mechanism.
7. Inspect piston, crankshaft and cylinder.
8. Inspect thickness and clearances of piston rings.
9. Arrange piston ring ends.
10. Measure sizes of gudgeon pin, hole and small-end connecting rod.

6. Lubrication system

6.1 Tasks of the lubrication system

1. Tell the Tasks of the lubrication system
2. Tell various parts that need lubrication.

6.2 Splash-type lubrication

3. Tell various parts of the splash-type lubrication.
4. Explain principle of the splash-type lubrication.
5. Tell advantages and disadvantages of the splash-type lubrication.

6.4 Repair and maintenance

6. Check and change oil.

7. Cooling system

1. Tell tasks of the cooling system.
2. Explain principle of air cooling system.
3. Tell components of air cooling system

7.1 Repair and maintenance

4. To remove-reassemble various components of cooling system.
5. To clean blower blade and its cover.

8. Starting system

8.1 Types of starting system

1. Tell types of starting systems.

8.2 Components of starting system

2. Tell components of starting unit.
3. Tell functions of components of starting unit.

8.3 Repair and maintenance

4. To remove/reassemble components of the starting unit.
5. To repair the starting unit.

9. Exhaust system

9.1 Purpose of exhaust system

1. Tell purposes of the exhaust system.

9.2 Components of exhaust system

2. Tell components of theexhaust system.
3. Tell functions of the components of the exhaust system.

1 Fuel system

1.1 Components of fuel system

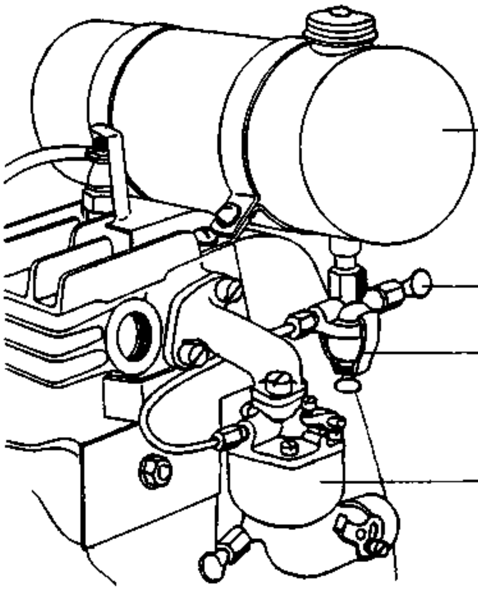

Fuel is delivered from the fuel tank into the carburetter by means of its gravity

1.2 Fuel tank

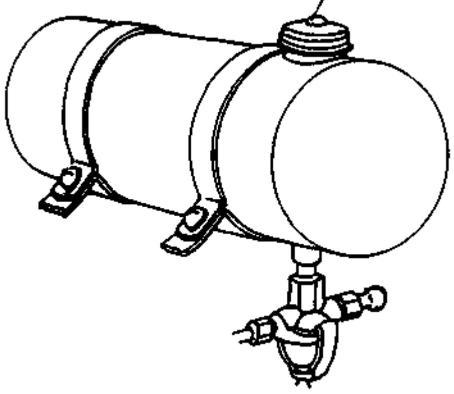

Vent : When fuel level decreases, air can enter into the fuel tank via the vent and fills up the decreased space of fuel.

1.3 Fuel filter

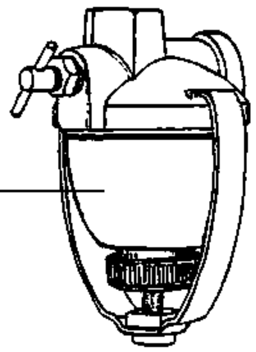

Fuel filter will trap impurities as contained in the fuel before the fuel is delivered into the carburetter.

1.4 Air filter

If unfiltered air is entering the combustion cambre, then both, cylinder and piston will be worn rapidly.

1.4.1 Oil bath- or wet-type

Oil will trap dust in the air.

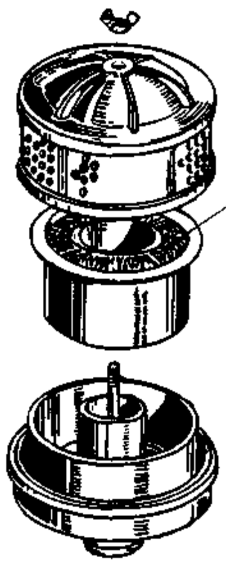

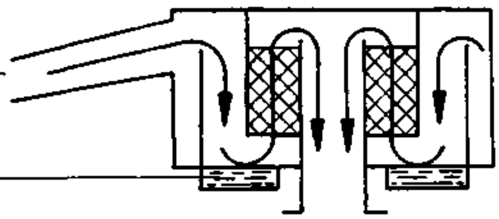

Filtered air to carburetter

Advantage : Filter screen can be washed by benzene

Disadvantage : dirty

1.4.2 Paper element type or dry type

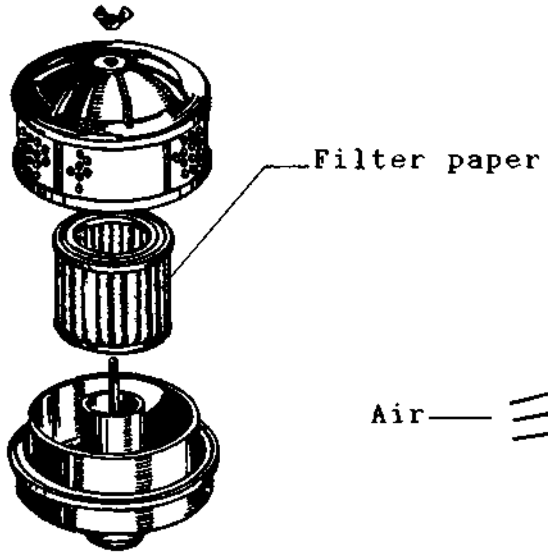

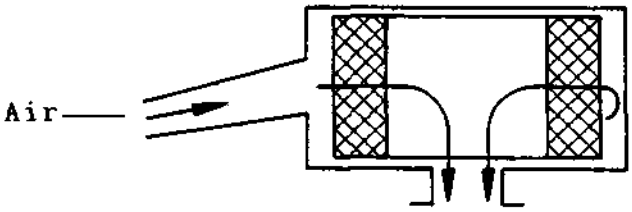

Filtered air to carburetter

Advantage : Easy to use and maintain, most use nowaday

Disadvantage : If the filter gets too dirty, it most be replaced.

1.1 to 1.4 Tank and Filters

Cross the correct statements!

.... 1. Fuel from the fuel tank enters into the carburetter by means of its gravity.

.... 2. In small engines, the fuel tank is mounted below the carburetter.

.... 3. If the fuel tank vent is clogged, then the fuel cannot enter into the carburetter.

.... 4. Fuel filter can trap water as contained in the fuel.

... 5. Engine without fuel filter will shorten life of its piston and piston rings.

.... 6. Air filter can be classified, according to usage, into 2 types: wet and dry.

.... 7. Wet type air filter uses oil to trap dust from intake air.

.... 8. Clogged air filter will cause high fuel consumption.

.... 9. Wet type air filter can be cleaned by benzene.

.... 10. Nowaday, small engines employ the dry type air filter.

1.1 to 1.4 Tank and Filters

Cross the correct statements!

.X. 1. Fuel from the fuel tank enters into the carburetter by means of its gravity.

.... 2. In small engines, the fuel tank is mounted below the carburetter.

.X. 3. If the fuel tank vent is clogged, then the fuel cannot enter into the carburetter.

.... 4. Fuel filter can trap water as contained in the fuel.

... 5. Engine without fuel filter will shorten life of its piston and piston rings.

.X. 6. Air filter can be classified, according to usage, into 2 types: wet and dry.

.X. 7. Wet type air filter uses oil to trap dust from intake air.

.X. 8. Clogged air filter will cause high fuel consumption.

.X. 9. Wet type air filter can be cleaned by benzene.

.X. 10. Nowaday, small engines employ the dry type air filter.

1.5 Carburetter

1.5.1 Principle of carburetter

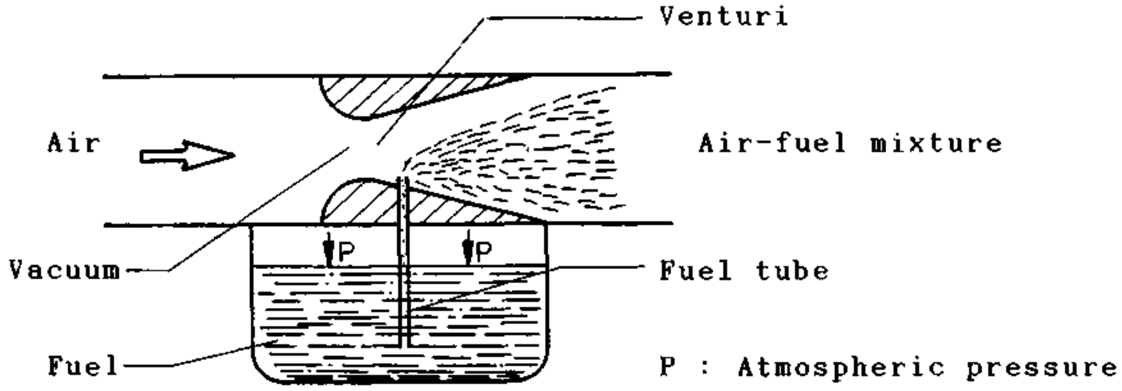

As air rushes through the venturi, it will develop partial vacuum in that area. At the same time, atmospheric pressure will push fuel up by the fuel tube to mix with the rushing air.

1.5.2 Types of carburetter

They can be classified into three types according to suction methods:

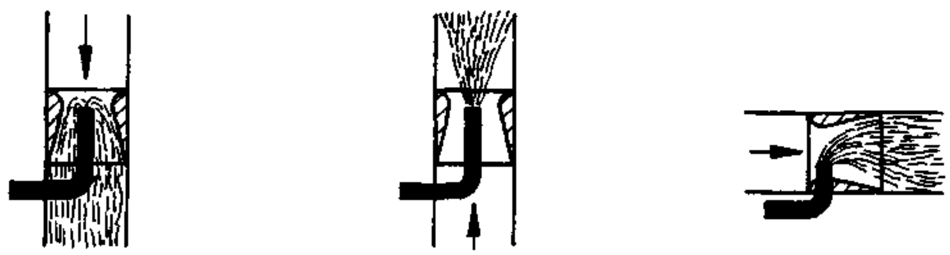

a) Down draft b) Up draft c) Side draft

Remark: Most small engines use the side draft carburetters, and next the up draft ones.

1.5.3 Side draft carburetter

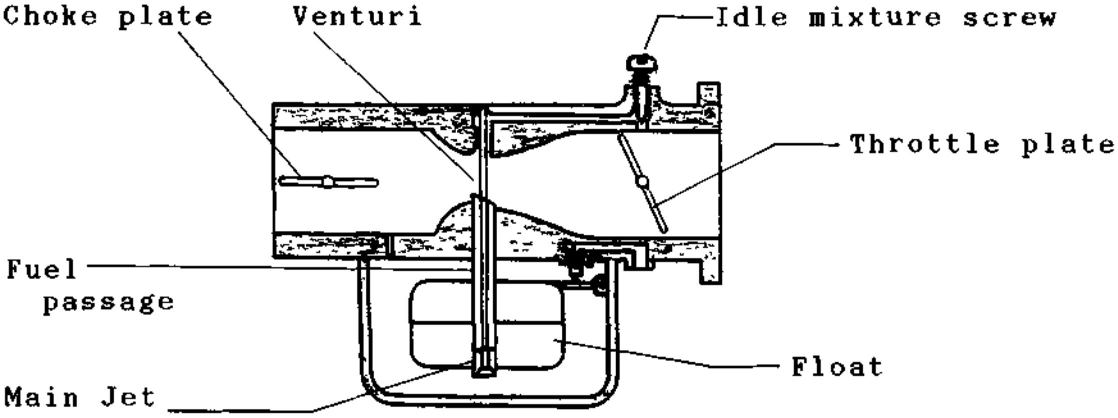

1.5.4 Floating circuit

Floating circuit is to control the amount of fuel entering the float chamber and maintain the fuel level in it.

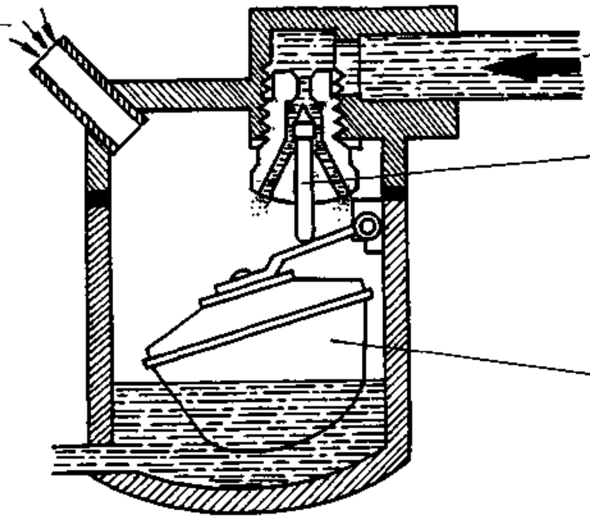

As the engine is running, a certain amount of fuel is used up causing the fuel level to decrease and thereby lowering the float which activates the needle value to allow additional fuel to enter into the float chamber.

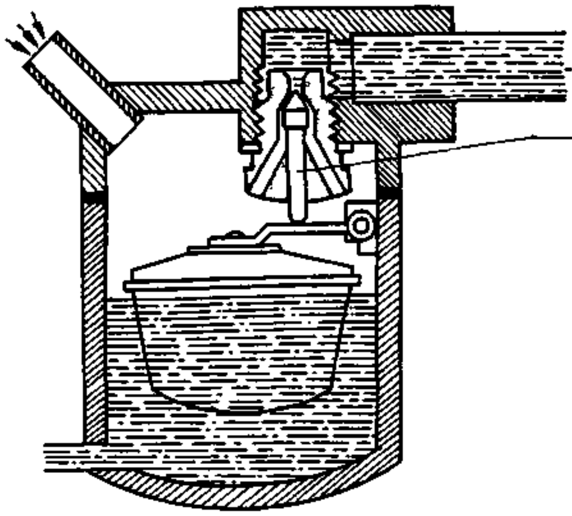

As additional fuel is entering into the float chamber, the float rises until a certain level the needle value closes and fuel flow ceases. In this circumstance, the fuel level is maintained constantly.

1.5.5 Idle circuit

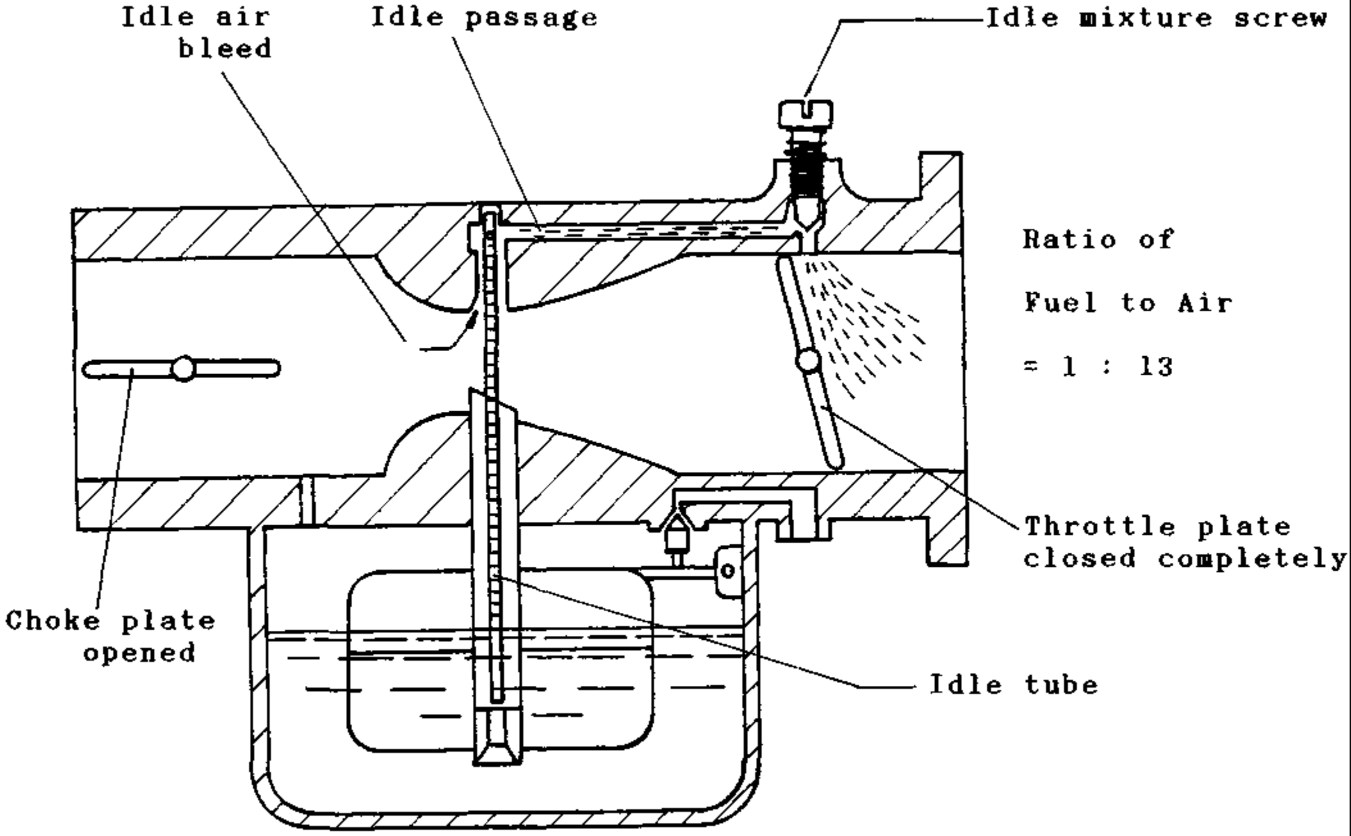

When the throttle plate closes completely, air is sucked via the idle air bleed and thereby sucks fuel from the float blow to mix with it in the idle passage and comes out by the idle port.

Ratio of fuel to air can be adjusted by means of the idle mixture screw. Whereas the idle speed is adjusted by the idle speed screw.

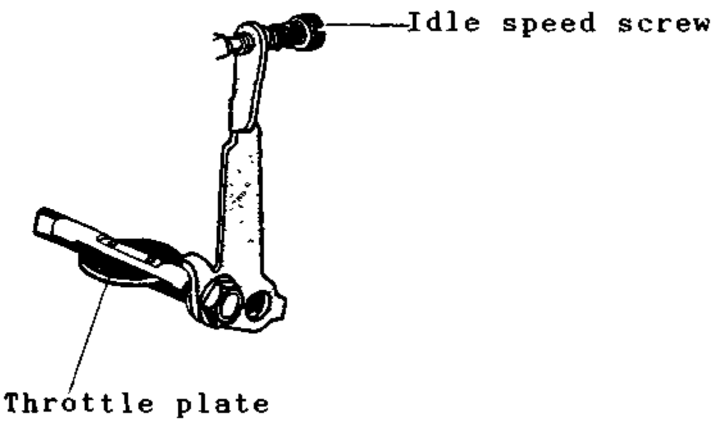

1.5.6 Full throttle circuit

Full throttle circuit is for distributing sufficient amount of air-fuel mixture to the required increasing engine speed.

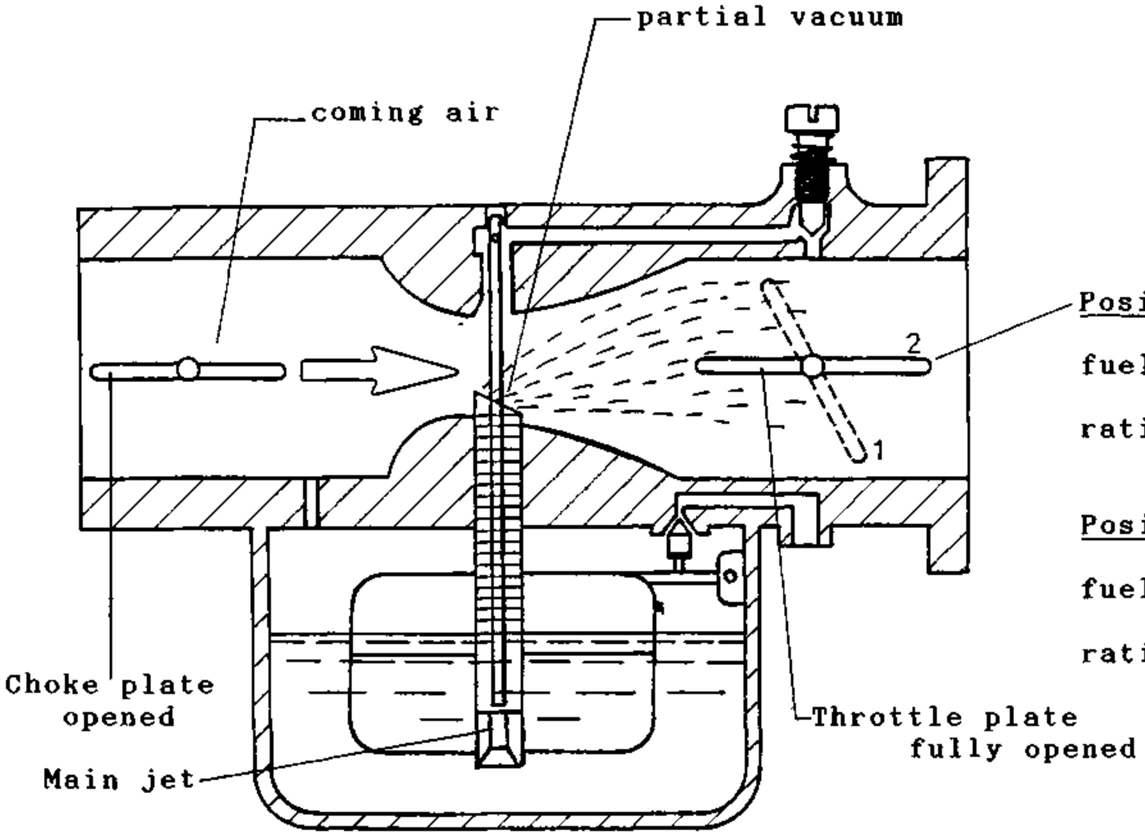

Position 2: fuel to air ratio 1 : 13

Position 1: fuel to air ratio 1 : 15

Pos. 1 : When the throttle plate opens, air rushes over the venturi increasing the partial vacuum in that aerea and thereby sucks fuel via the main jet - Engine speed is thus increasing.

Pos. 2 : When the throttle plate opens fully, more air rushes over the venturi, thus higher partial vacuum is developed. The fuel is sucked more than in the previous position, thus the engine is running at maximum speed.

1.5.7 Choke Circuit

Choke circuit provides richer fuel mixture than normal especially, during the start of the engine.

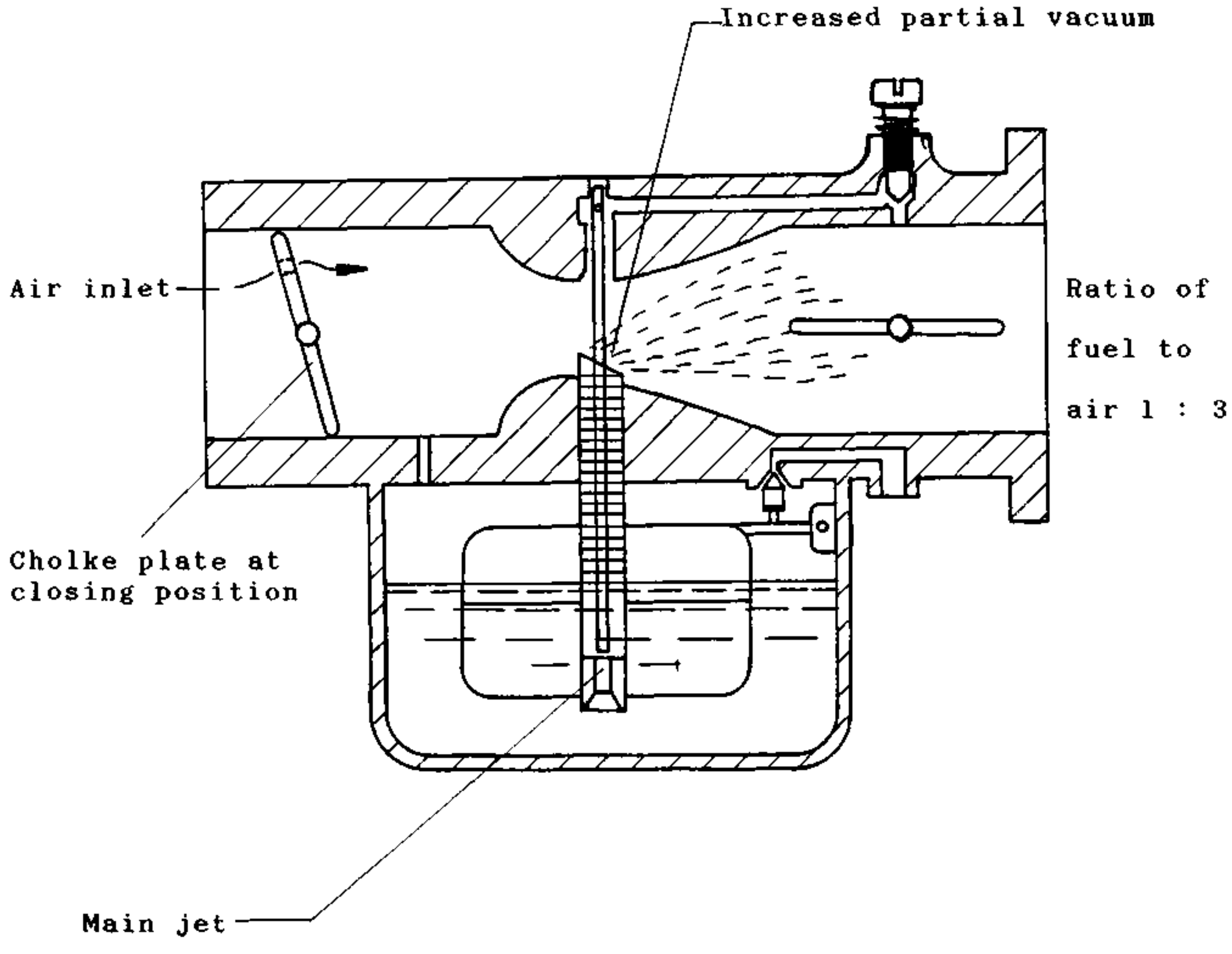

When the engine is started, its speed is still low. A small amount of air flows through the venturi and suck very limited amount of fuel. Increasing fuel is needed in this case by closing the choke plate which in turn increasing the partial vacuum over the venturi.

1.5 Caburetter (I)

1. Name the parts of the carburetter!

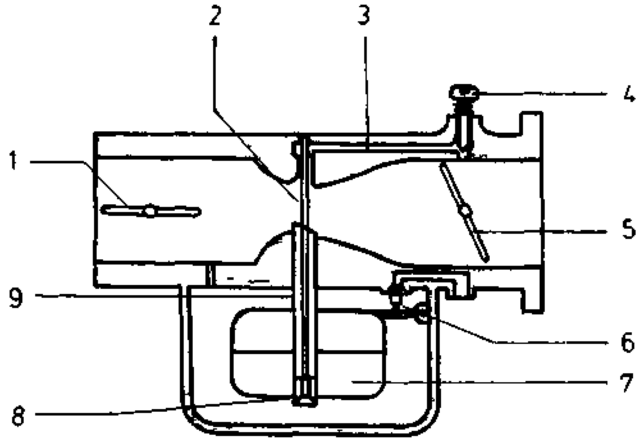

1. ______________________
2. ______________________
3. ______________________
4. ______________________
5. ______________________
6. ______________________
7. ______________________
8. ______________________
9. ______________________

2. As air is flowing through the venturi, the pressure at the venturi is -higher/lower- than the atmopheric pressure.

3. The pressure over the float chamber is -higher/lower- than the pressure at the main jet when air is flowing through the venturi.

4. Carburetters used in small engines can be classified, according to types of drafts, into __ types; i.e. ____________________.

5. The most used carburetter for small engines is _____________.

6. The float circuit is for ________________________________.

7. If the fuel level in the float chamber is dropped, the needle valve will -close/open-.

8. The fuel to air ratio of the idle circuit is about ___ : ___.

9. While the engine is idling, the throttle plate will be at -fully closing/fully opening- position.

10. The fuel to air ratio of the idle circuit can be adjusted by ____________________.

1.5 Caburetter (I)

1. Name the parts of the carburetter!

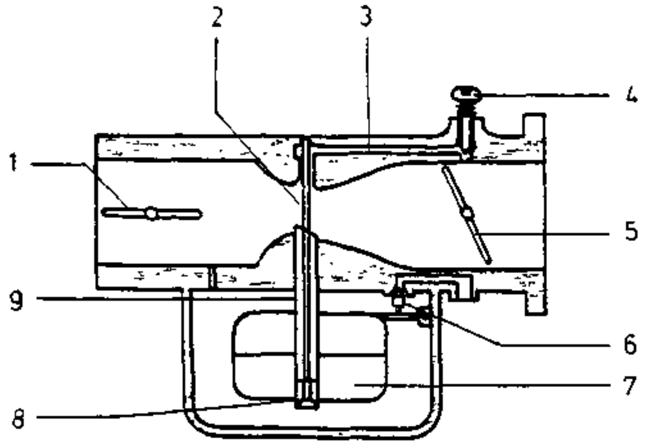

1. Choke plate
2. Venturi
3. Idle passage
4. Idle mixture screw
5. Throttle plate
6. Needle valve
7. Float
8. Main jet
9. Fuel passage

2. As air is flowing through the venturi, the pressure at the venturi is -~~higher~~/lower- than the atmopheric pressure.

3. The pressure over the float chamber is -higher/~~lower~~- than the pressure at the main jet when air is flowing through the venturi.

4. Carburetters used in small engines can be classified, according to types of drafts, into 3 types; i.e. down, up, side.

5. The most used carburetter for small engines is side draft.

6. The float circuit is for control the amount of fuel in the carboretter.

7. If the fuel level in the float chamber is dropped, the needle valve will -~~close~~/open-.

8. The fuel to air ratio of the idle circuit is about 1 : 13.

9. While the engine is idling, the throttle plate will be at -fully closing/~~fully opening~~- position.

10. The fuel to air ratio of the idle circuit can be adjusted by the idle mixture screw.

1.5 Carburetter (II)

Picture 1: If little fuel is needed by the cylinder, (idle run) what will be the position of the throttle plate? (make a sketch!)

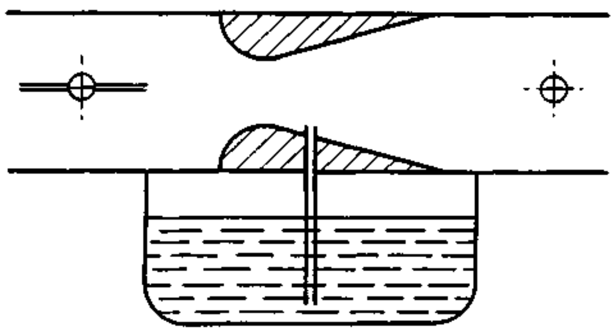

Picture 2: If more fuel is required by the cylinder, what will be the position of the throttle plate ? (make a sketch!)

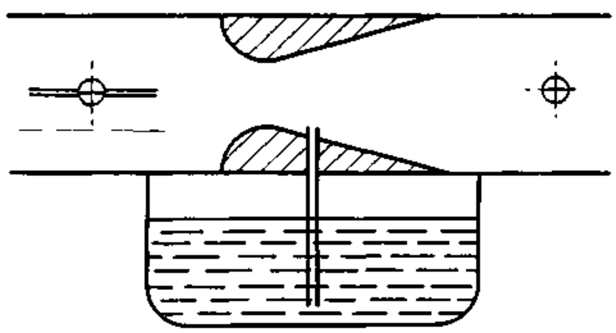

Picture 3: If maximum fuel is needed by the cylinder, what will be the positions of both, the choke plate and the throttle plate ? (make a sketch!)

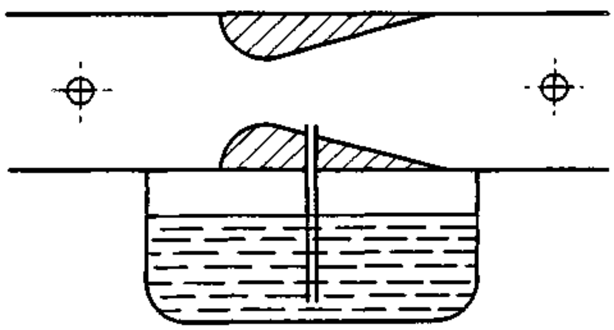

1.5 Carburetter (II)

Picture 1: If little fuel is needed by the cylinder, (idle run) what will be the position of the throttle plate? (make a sketch!)

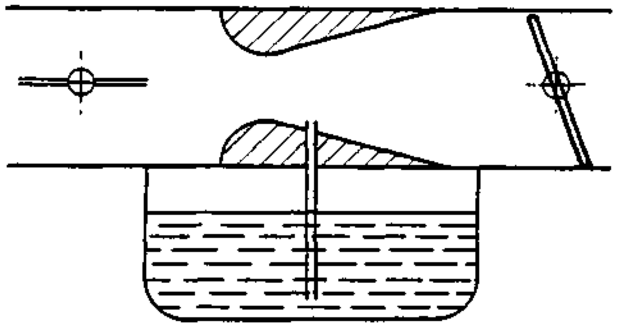

Picture 2: If more fuel is required by the cylinder, what will be the position of the throttle plate ? (make a sketch!)

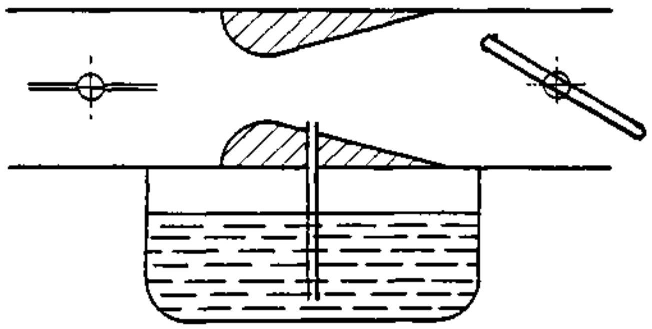

Picture 3: If maximum fuel is needed by the cylinder, what will be the positions of both, the choke plate and the throttle plate ? (make a sketch!)

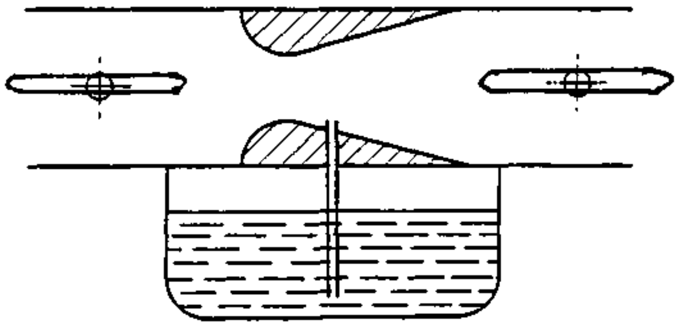

1.5 Carburetter (III)

Answer the following questions correctly!

1. In float setting, what will happen if the float is not set to the specified value ?

   1.1 In case the float is too low : ____________________________

   ____

   ____.

   1.2 In case the float is too high ____________________________

   ____

   ____.

2. What will happen if the idle mixture screw is not adjusted to the specified value?

   2.1 In case it is higher than the given standard : ___________

   ____.

   2.2 In case it is lower than the given standard : ____________

   ____.

3. How can the size of the main jet effect the fuel consumption rate ?

   ____

   ____

   ____.

4. What will happen if the needle valve is worn ?

   ____

   ____

   ____.

1.5 Carburetter (III)

Answer the following questions correctly!

1. In float setting, what will happen if the float is not set to the specified value ?

   1.1 In case the float is too low : Fuel is overflowing

   1.2 In case the float is too high : Insufficient fuel

2. What will happen if the idle mixture screw is not adjusted to the specified value?

   2.1 In case it is higher than the given standard : idle speed is to high.

   2.2 In case it is lower than the given standard : idle speed is to low.

3. How can the size of the main jet effect the fuel consumption rate ?

   Big bore → high fuel consumption
   Small bore → low fuel consumption

4. What will happen if the needle valve is worn ?

   The carborctter will leak

1.6 Repair and maintenance

1.6.1 Servicing fuel tank

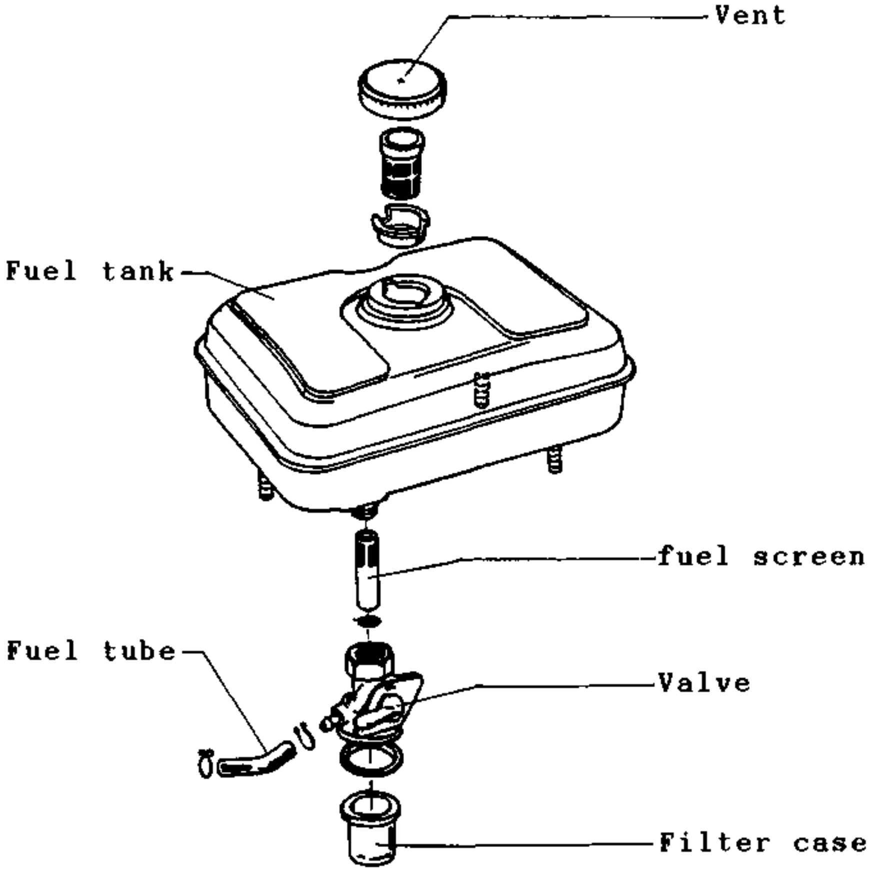

Caution : Fuel must be drained out completely prior removing the fuel tank.

Components	Services
1. Fuel cap	-Inspect the vent, it must be clean and clear. Use air gun to clean it.
2. Fuel tank	-Inspect for any puncture of the fuel tank. Clean inside of the tank.
3. Fuel screen	-Inspect for any blockage or wreckage.
4. Valve	-Clean it.
5. Fuel tube	-Inspect conditions like cracks.
6. Filter cae	Clean the filter case in benzene.

Caution : Be sure that no fuel leakage after reassemble.

1.6.2 Servicing dry-type air filter

- Filter paper type

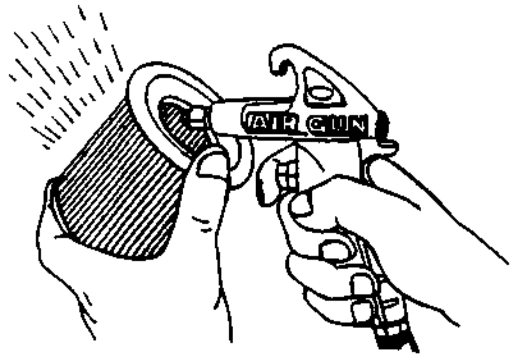

- Tap the filter rim gently or brush the paper.
- Blow out dirt from inside the filter with an air gun.

- Filter sponge

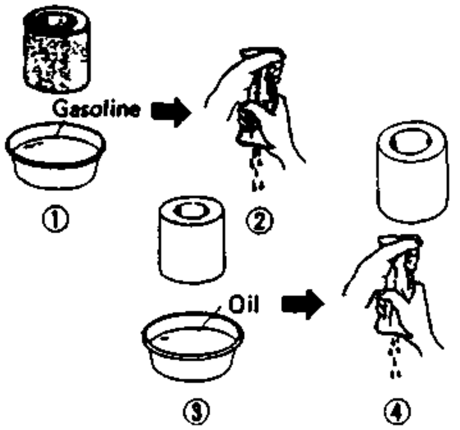

- Clean the filter sponge in benzene, squeeze out dirt.
- Dry the filter sponge by squeezing and waving it.
- Dip the filter sponge into the pan of oil and benzene mixture of 1 to 10 ratio.
- Squeeze the sponge until wet dry.

Precaution : Do not twist the filter sponge, otherwise it will be torn off. Replace the damaged or ruin sponge.

1.6.3 Servicing wet-type filter

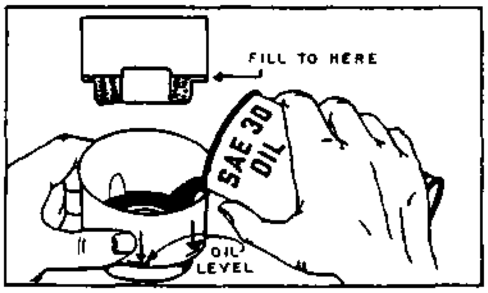

- Remove the filter and stir it in a fuel pan.
- Clean the filter inside and outside.
- Refil the oil upto the marked level.

Precaution : Use the correct oil and refil according to the manufacturer's manual.

1.6.4 Dismantling Reassembling carburetter

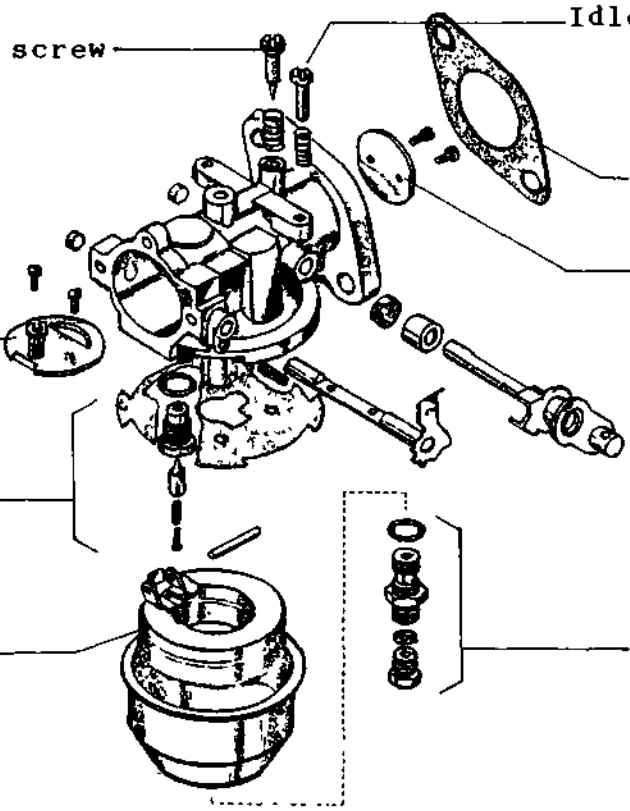

Components	Services
1. Float chamber	- Clean and blow with air gun
2. Float	
3. Main jet	- Blow with air gun
4. Needle	- Inspect for wear
5. Idle mixture screw	- Inspect for wear or damage on cone and thread
6. Carburetter body	- Clean and blow with air gun.

Remarks: - In removing the carburetter assembly, unscrew and remove the float chamber, and drain out fuel residual.

- Before Inspection, clean all parts with benzene and brush, and blow until dry with air gun.

1.6.5 Float Setting

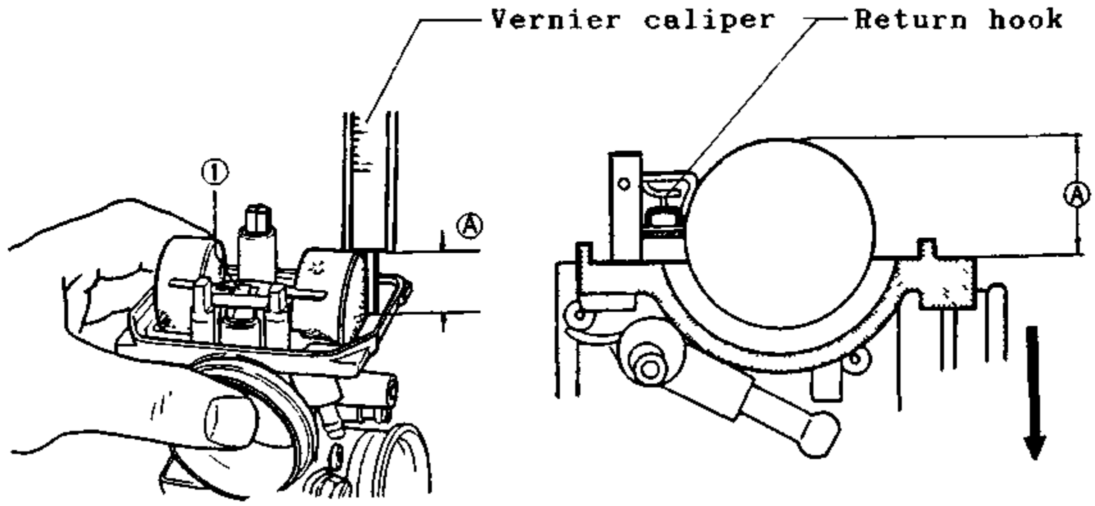

Measuring and setting:

With the float cover placed horizontally, lift the float slowly with a finger (until the return hook is just lifting the float). Measure the height of the float at this position and compare the obtained value with that given in the manual.

If the obtained value is outside the manual value, then resetting is needed.

Example:

Standard value for height of float:	HONDA	G 150	8.2 mm
		G 200	8.0 mm
		GX 120	13.7 mm
		GX 160	13 mm

1.6.6 Idle mixture adjustment

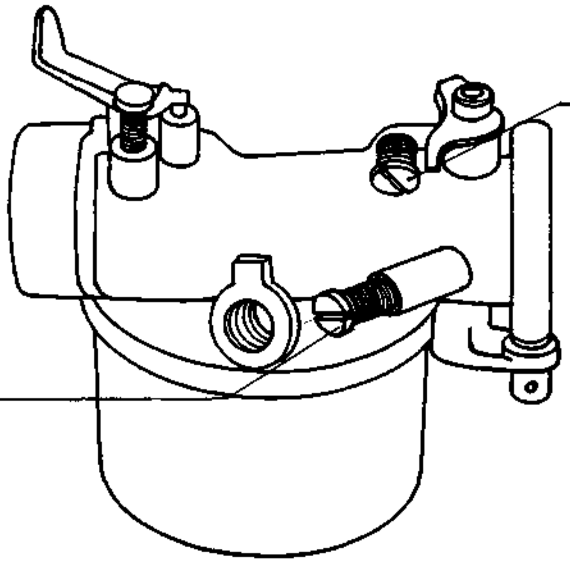

Screw in the idle mixture screw completely and then unscrew it for the specified number of turns as given in the manual.

The specified number of turns of idle mixture screw:	HONDA	G 150	1 3/8 Turns
		G 200	3 1/4 Turns
		G x 120	2 5/8 Turns
		G x 160	2 1/8 Turns

<u>Remark</u>: If the specified number of turns is not known, then assumes for 1 1/2 to 2 turns or observe for the smoothest idling of the engine.

1.6.7 Idle speed setting

- Start the engine and allow it to idle.
- Adjust the idle speed screw inward or outward until the specified number of revolutions is obtained.

Standard idling speed	1,400 rev/min

1.6.8 Fault diagnosis oif engine as due to carburetter failure.

Symptom	Causes	Remedy
1. Wet spark plug	- Fuel flooded - Worn float needle or dirty	- adjust float level - Clean, replace
2. Idle speed too high	- Incorrect idle speed - Clogged idle circuit - Clogged fuel tube of idle circuit	- Readjust idle mixture screw - Clean, blow with air gun
3. Poor acceleration	- Clogged fast idle main jet - Fuel level is too low in the float chamber - Choke unit sticking	- Clean, blow with air gun - Readjust the float level - Dismantle, clean
4. Engine will not start	- Float sticking, no fuelentering - Choke unit sticking - Fuel flooded	- Clean - Dismantle, clean - Readjust the float level

1.2 to 1.4 Tank and Filters (I)

Tools: A set of wrenches, air gun with hose

Equipement: Benzen, Oil, Soft brush, cleaning pan, cloth

Manufacturer .... Model ....

Type of air cleaner ....

Sequence of operations	Inspection
1. Prepare tools and equipment	
2. Close fuel valve and disconnect hoses.	- Condition of fuel valve ☐ Normal ☐ Damaged - Condition of hose ☐ Normal ☐ Damaged
3. Remove fuel tank	
4. Empty the fuel tank	- Condition of fuel ☐ Normal ☐ Deposited ☐ Water contained ☐ Others
5. Remove fuel valve and fuel cap	- Condition of fuel cap ☐ Normal ☐ Blocked vent
6. Clean fuel valve and fuel filter	- Condition of fuel filter ☐ Normal ☐ Clogged ☐ Damaged
7. Clean fuel tank with benzene	- Condition of fuel tank ☐ Normal ☐ Rusty ☐ Leaked
8. Reassemble those components in reverse order.	Remarks: ______________________ ______________________________

1.2 to 1.4 Tank and Filters (II)

Sequence of operations	Inspection
Paper type air cleaner:	
1. Remove the air cleaner unit from the carburetter.	
2. Remove the filter for inspection	- Condition of the filter ☐ Normal ☐ Dirty, clogged ☐ Damaged ☐ Others
3. Blow the filter from inside	
4. Clean the air cleaner body with benzene	
5. Reassemble the air cleaner	Remarks: ....
Sponge type air cleaner:	
1. Remove the air cleaner unit from carburetter.	
2. Remove the filter for inspecting.	- Condition of filter ☐ Normal ☐ Dirty, clogged ☐ Damaged ☐ Others
3. Clean the filter with benzene	
4. Squeeze and wave the filter.	
5. Dip the filter in the fuel oil mixture (1 : 10 ratio)	
6. Reassemble the air cleaner	Remarks: ....

1.2 to 1.4 Tank and Filters (III)

Sequence of operations	Inspection
Wet type air cleaner:	
1. Remove the air cleaner unit.	
2. Remove the filter for inspecting	- Condition of the filter ☐ Normal ☐ Dirty, clogged ☐ Damaged ☐ Others
3. Clean the filter and the air cleaner body.	
4. Refil oil into the air cleaner body upto the marked level.	- Amount of refil oil ...... ccm Oil number ....
5. Reassemble the filter and the air cleaner.	
6. Clean and store tools and equipment used.	Remarks ....

1.5 Carburetter (I)

Tools: A set of wrenches, air gun with hose

Equipement: Benzen, soft brush, cleaning pan, cloth

Manufacturer .... Model ....

Type of carburetter .... Model ....

Standard float height ..... mm

Standard number of
turns of idle mixture screw ....

Standard idling speed .... rev/min

Standard number of main jet ....

Sequence of operation	Inspection
1. Prepare tools and equipment.	
2. Remove air cleaner.	- Type of filter
3. Close fuel valve and disconnect hose.	
4. Remove carburetter and related linkage and spring. Remark : Memorize linkages before removing.	
5. Clean outside of carburetter.	- Condition of leakage ☐ Nil ☐ leaked
6. Remove carburetter cover and empty fuel residual. Caution : Gasket may be torn off	- Condition of float chamber ☐ Normal ☐ Dirty - Condition of fuel ☐ Normal ☐ Di ty ☐ Water contained ☐ Others

1.5 Carburetter (II)

Sequence of operaations	Inspection
7. Remove float and needle for inspection.	- Condition of float ☐ Normal ☐ Damaged - Condition of needle ☐ Normal ☐ Dirty ☐ Worn ☐ Others ....
8. Remove main jet assembly	- Condition of main jet bore ☐ Normal ☐ Blocked ☐ Worn Number of main jet .... ☐ Original main jet ☐ New main jet
9. Remove idle mixture screw	- Condition of idle mixture screw ☐ Normal ☐ Dirty ☐ Worn ☐ Others ....
10. Clean all components with benzene and dry with air gun.	
11. Set the height of float according to the manual.	- Height of float Obtained value .... mm ☐ Normal ☐ Resetting
12. Reassemble the carburetter in reverse order.	

1.5 Carburetter (III)

Sequence of operations	Inspection
13. Adjust the idle mixture screw according to the manual as specified.	- Number of turns ......
14. Start the engine and allow to idle.	- Performance of the engine ☐ Normal ☐ Abnormal
15. Adjust the idle speed screw according to manual.	- Idling speed as specified .... rev/min
16. Stop the engine	
17. clean tools and equipement and store it.	

Remarks:...
....
....
....

2. Ignition system

2.1 Basic principle

For small gasoline engines, magneto ignition system is generally used.

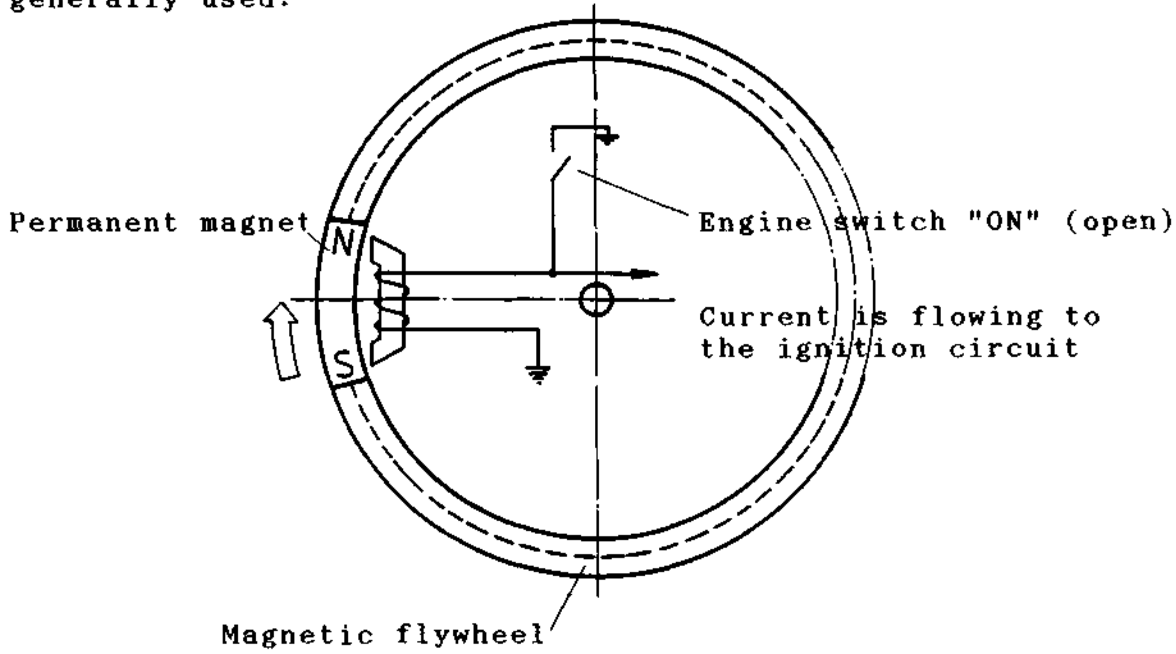

- The magnetic field of the permanent magnet, which rotates over the coil will generate current in the coil circuit.

- If the engine switch is at "OFF" position (closed), the generated current flows to the ground and cause no current flows in the ignition circuit.

Magneto ignition system can be classified into 3 types:

1. Contact point ignition system.

2. Transistor ignition system

3. Capacitive discharge ignition system.

On the following pages the function of these systems is shown.

2.2 Contact point ignition system

2.2.1 Components of contact point ignition system and their function

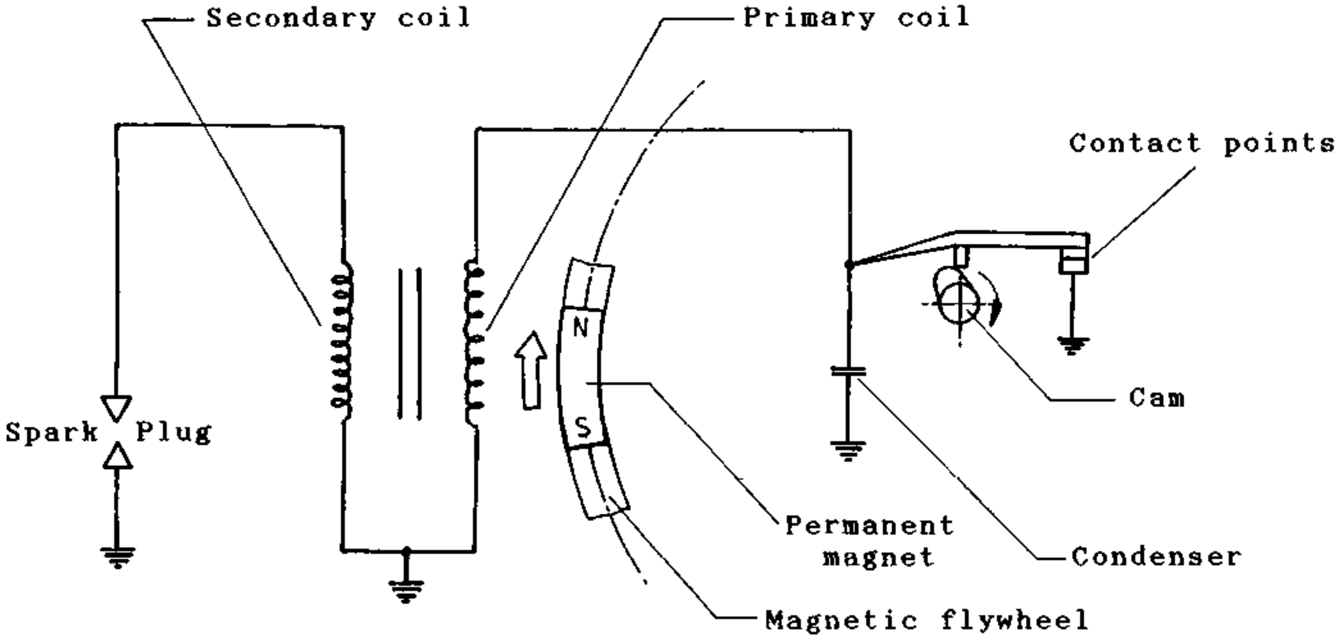

Components	Functions
1. Magnetic fly wheel	- makes the permanent magnet rotates around the coil and thereby produces the current in the ignition circuit
2. Contact point	- switches on and off the current flowing from the primary coil
3. Cam	- open/closes the contact point at correct timing.
4. Condenser	- charges/discharges the current and to prevent arcing between the two contact points.
5. Ignition coil	- converts low current voltage to high current voltage, sufficient for arcing the spark plug.
6.Spark plug	- produces arcing and ignite the fuel mixture in cylinder.

2.2.2 Function of contact point ignition system

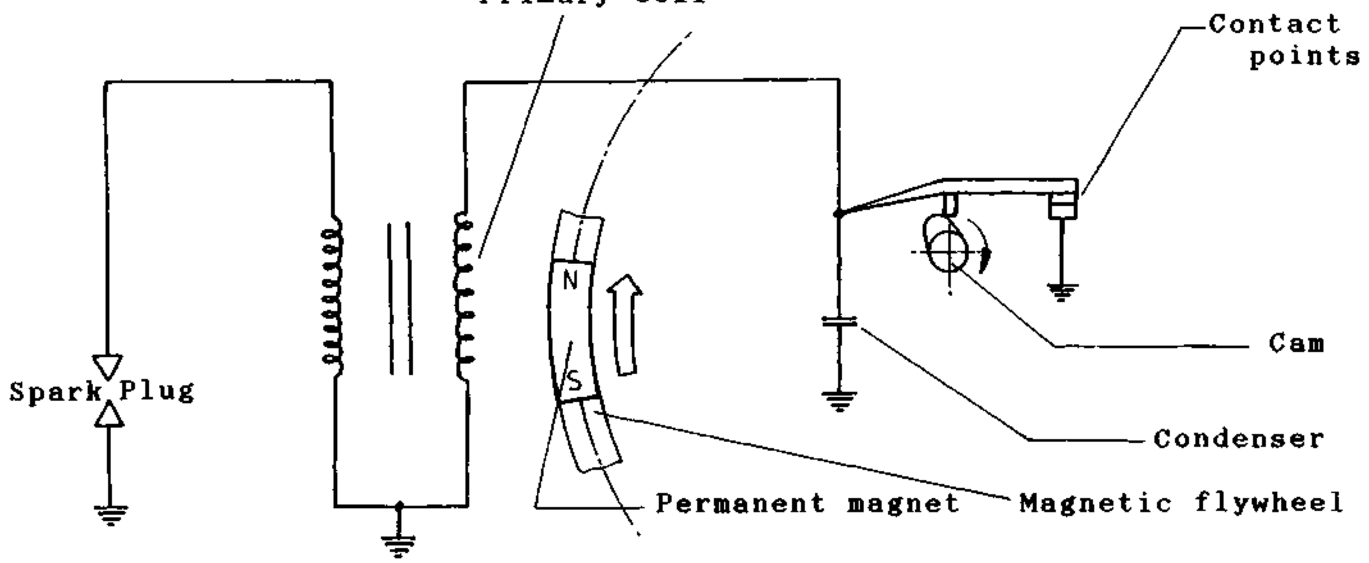

- When the engine is starting, the magnetic flywheel rotates causing the magnetic field of permanent magnet to cut the primary coil, and thereby generates current flowing in the primary coil.
  As the gap of contact point is closed, the generated current is flowing to the ground by the contact points.

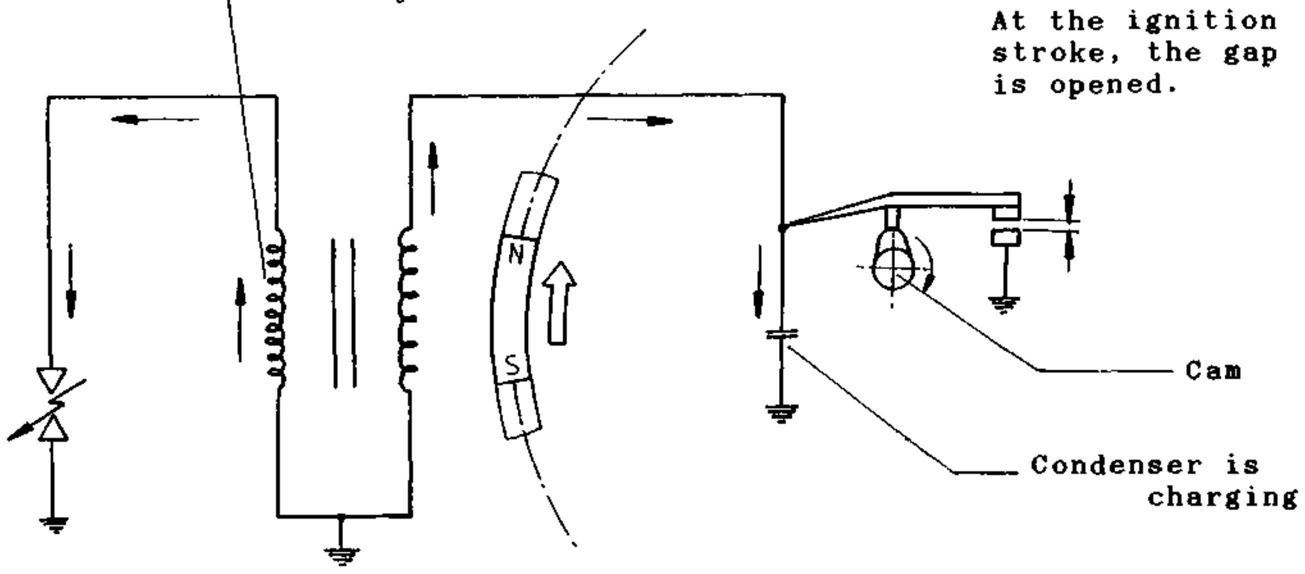

- At the ignition stroke, the cam mounted on the magnetic flywheel opens the gap of contact points. The current flowing to ground is impossible. The condenser is charging by the time the gap is opening. This will prevent arcing between contact points.
- A sudden interruption of current flowing in the primary coil causes the magnetic field to collapse and cut the secondary coil.
- Thus, the high current voltage is generated in the secondary coil and enable arcing between the electrodes of the spark plug.

2.2 Contact point ignition system

Complete the sentences or underline the correct options.

1. Ignition system generally used in small gasoline engine is -battery/magneto type.
2. Current which flows in the ignition circuit is generated by ___________________ .
3. Magneto ignition system is classified into _____ types, they are ____ .
4. Please name all parts of the ignition system.

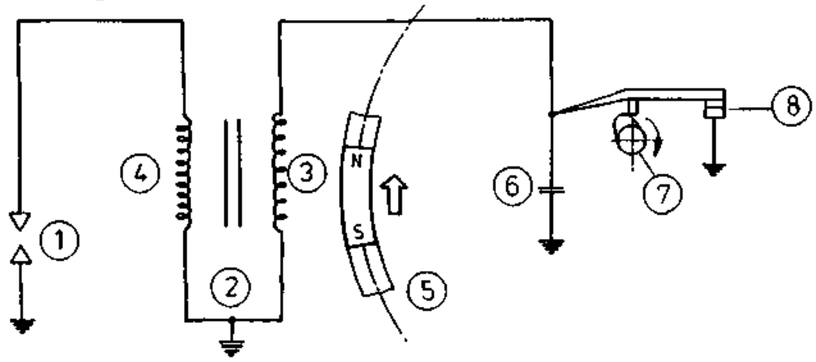

1.	5. ....
2.	6. ....
3.	7. ....
4.	8. ....

5. Contact point is for _______________________________________ .
6. The device that opens/closes the contact point is __________ .
7. Condenser/Ignition coil is for converting low current voltage to high current voltage.
8. The primary coil will be induced when the gap of contact point is closed/opened.
9. When the current flowing in the primary coil is interrupted suddenly, the magnetic field will _________________________ .
10. The secondary coil shall generate high current voltage for the spark plug when the gap of contact is beginning to open/close.

2 Contact point ignition system

Complete the sentences or underline the correct options.

1. Ignition system generally used in small gasoline engine is ~~battery~~/magneto type.
2. Current which flows in the ignition circuit is generated by magnetic flywheel .
3. Magneto ignition system is classified into 3 types, they are Contact point, Transistor and CDI .
4. Please name all parts of the ignition system.

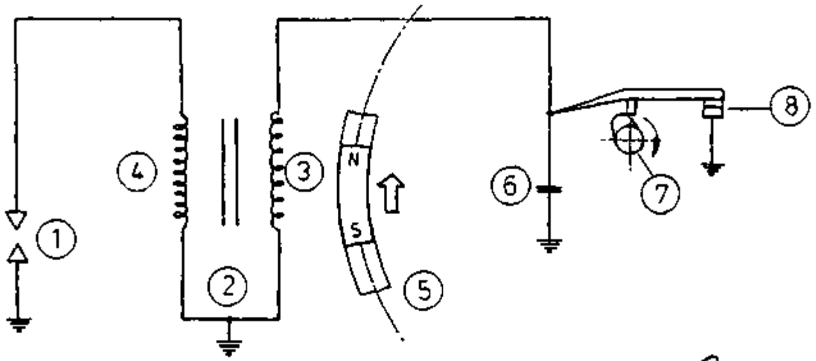

1. Spark plug
2. Ignition coils
3. Primary coil
4. Secondary coil
5. Magnetic flywheel
6. Condenser
7. Cam
8. Contact points

5. Contact point is for interrupting current flow in primary coil.
6. The device that opens/closes the contact point is the cam .
7. ~~Condenser~~/Ignition coil is for converting low current voltage to high current voltage.
8. The primary coil will be induced when the gap of contact point is closed/~~opened~~.
9. When the current flowing in the primary coil is interrupted suddenly, the magnetic field will collapse .
10. The secondary coil shall generate high current voltage for the spark plug when the gap of contact is beginning to open/~~close~~.

2.3 Transistor ignition system

2.3.1 Components of transistor ignition system and their function

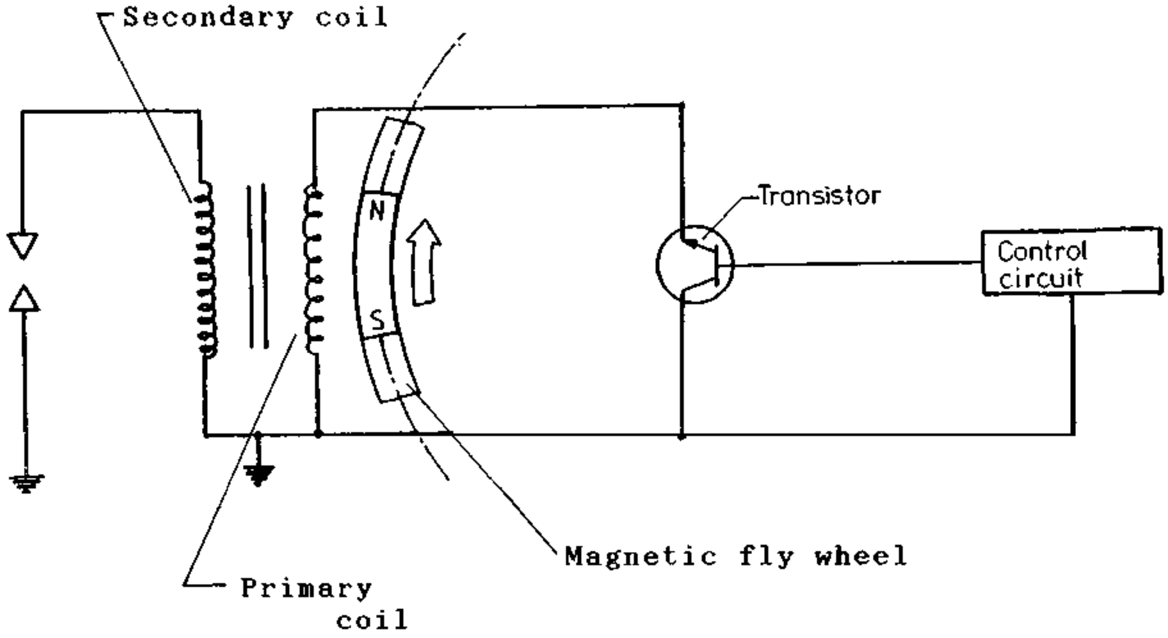

Transistor (TR)

- acts as on/off switch, like the contact points. But, a transistor can do the task contact-free.

Control circuit

- acts like the cam in opening-closing the contact points, it controls the opening/closing of the transistor.

2.3.2 Function of transistor ignition system

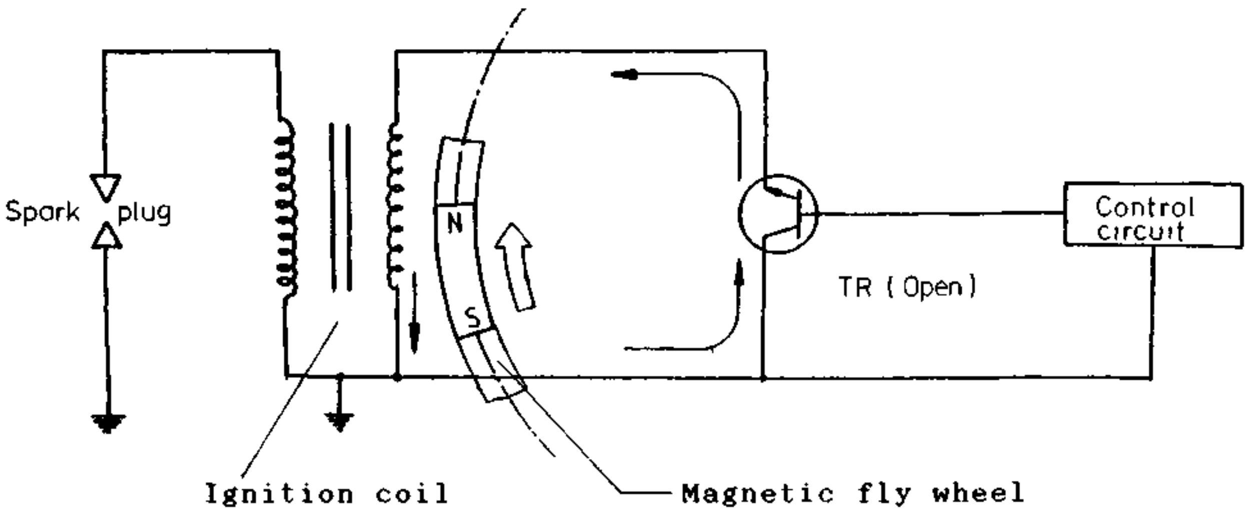

When starting the engine, magnetic fly wheel will rotate. As the magnetic field of permanent magnet is approaching the primary coil, current is induced and flowing through the transistor and thereby coming back to the primary coil, generating a magnetic field.

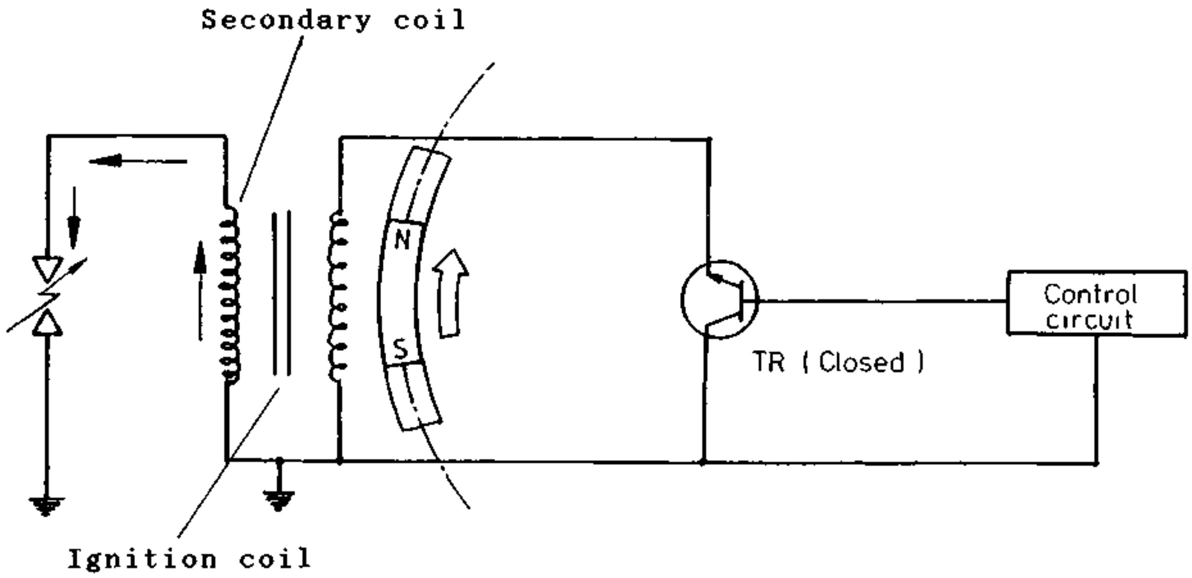

As the magnetic fly wheel turns until the ignition stroke, the induced voltage is increasing sufficiently for the control circuit to activate the Transistor to cut the flow of current to the primary coil. The magnetic field in the coil is, thus, collapsing and thereby inducing the high voltage current in the secondary coil, to flow to the spark plug.

2.4 Capacitive discharge ignition system (CDI)

2.4.1 Components of capacitive discharge ignition system and their function

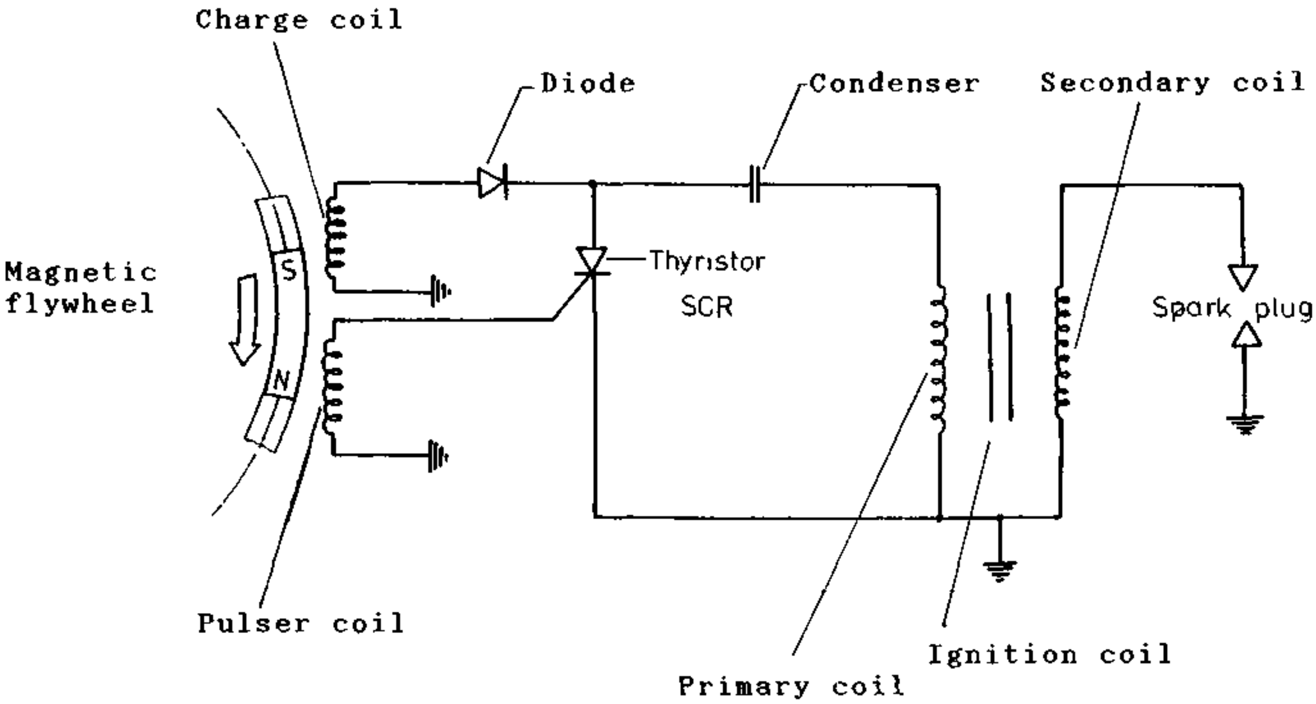

Components	Functions
1. Primary coil	- generates alternating current
2. Diode	- converts alternating current to direct current
3. Condenser	- charges and discharges current
4. Thyristor or SCR SCR = Silicon Control Rectifier	- closes/opens the circuit, acts like the contact points of the contact point ignition system. The current can flow from A to K only when G is activated.
5. Pulser coil	- generates a current to activate the SCR to open the circuit.

2.4.2 Function of CDI ignition system

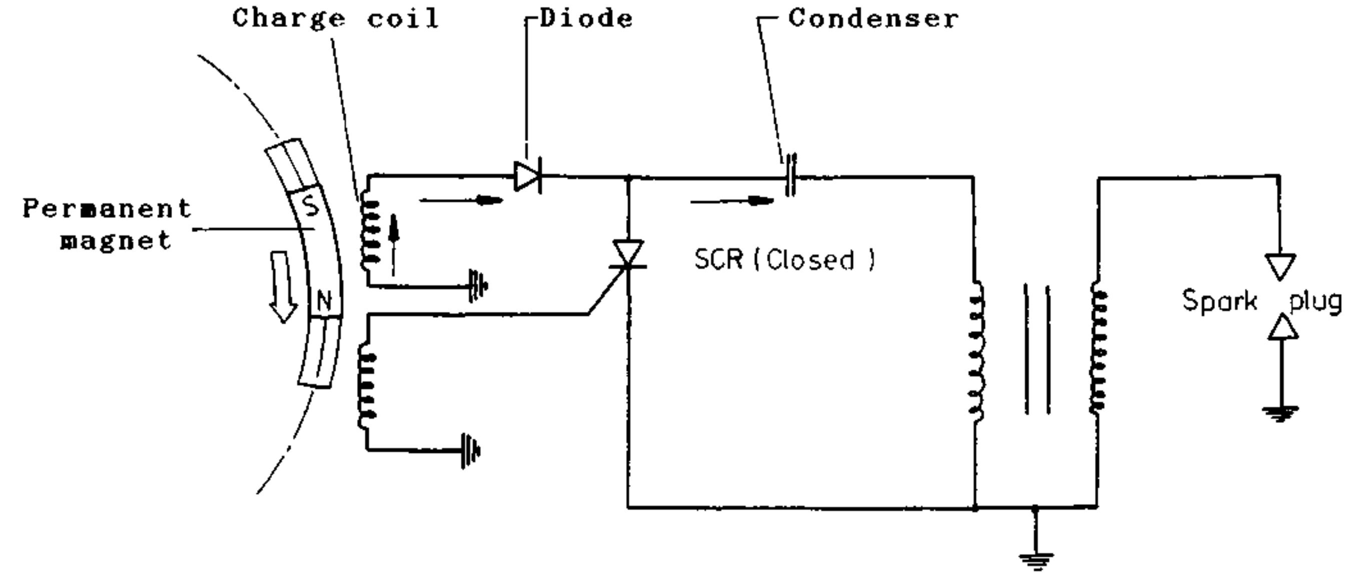

When starting the engine, the magnetic flywheel will rotate.
As the magnetic field of the permanent magnet cuts the charge coil, alternating current is induced and flows to the diode. The diode will rectify it into direct current and the condenser will store it.

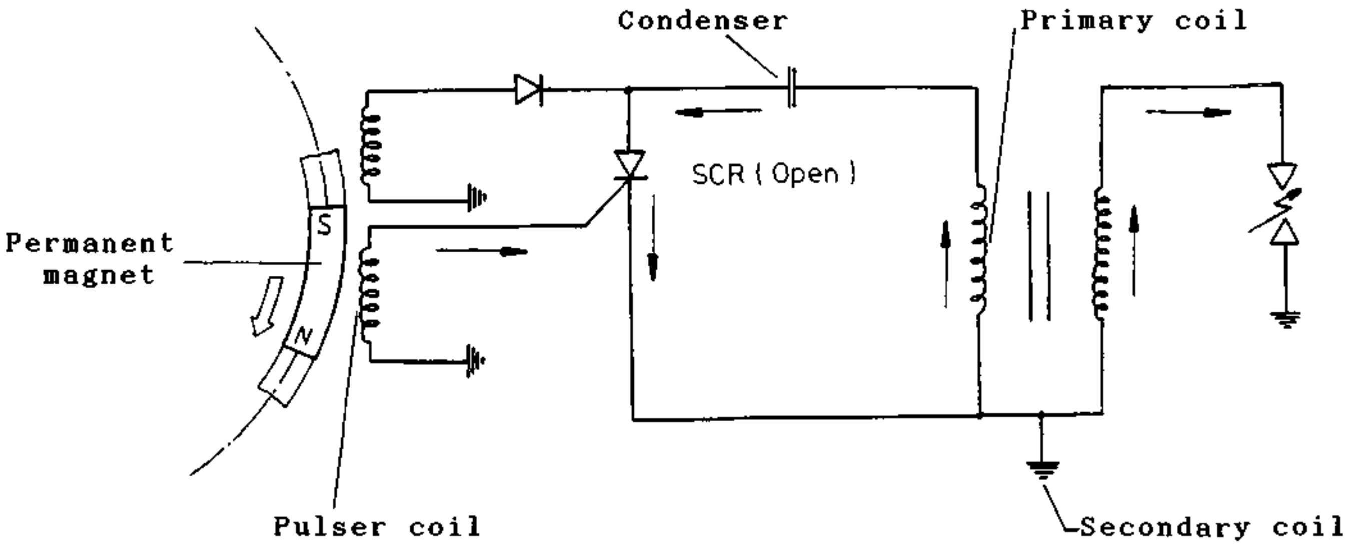

As the magnetic flywheel turns until the ignition stroke, its magnetic field cuts the pulser coil and current is generated.
The generated current will trig the SCR, causing the condenser to discharge its stored current to flow through SCR and through the primary coil to ground. This will induce the high current voltage in the secondary coil which flows to the spark plug causing arcing between the electrodes of the spark plug.

2.5 Advantages and disadvantages of CDI and transistor ignition systems

Advantages:

1. Reduced maintenance, no need of adjustment
2. Prolong life of a spark plug
3. No wearing of contact points
4. Easy starting, because higher ignition voltage
7. Constant high performance over the working life.

Disadvantages:

1. Expensive.
2. Electronic devices are not repairable.

2.3 and 2.4 Transistor and CDI ignition systems

Fill in the blanks and underline the correct answers.

1. Name various parts and complete the circuit diagramme of the transistor ignition system.

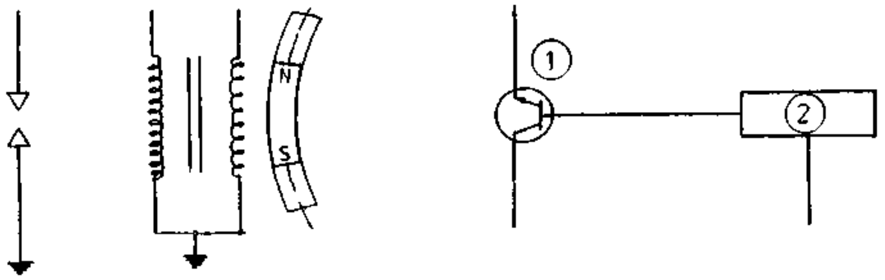

1. ....
2. ....

2. The Transistor is for ....

3. In a Transistor ignition system, the device which is

   equivalent to the cam is ....

4. The Control circuit will activate the Transistor to cut the current flow when the voltage is increasing/decreasing.

5. What happens, when the Transistor cuts the current flow to

   the primary coil? ....

   ....

6. Name the parts of the CDI system.

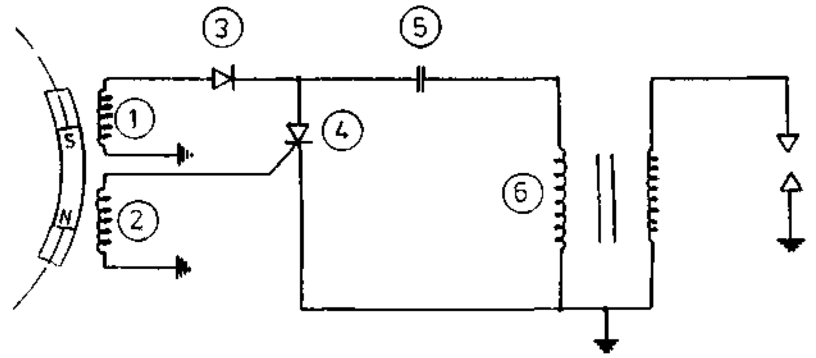

1	4 ....
2	5 ....
3	6 ....

2.3 and 2.4 Transistor and CDI ignition systems

Fill in the blanks and underline the correct answers.

1. Name various parts and complete the circuit diagramme of the transistor ignition system.

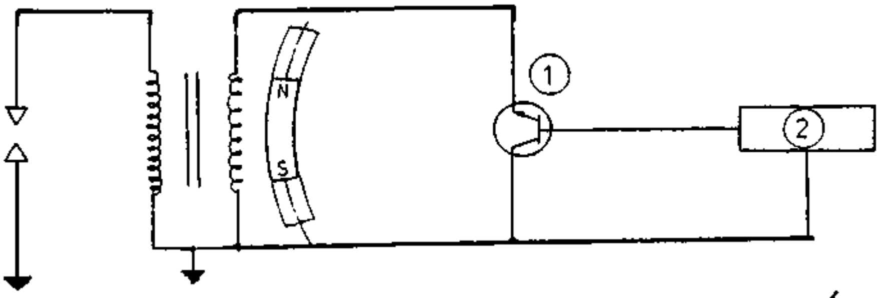

1. Transistor........
2. Control unit......

2. The Transistor is for opening/closing the current flow of primary coil
3. In a Transistor ignition system, the device which is equivalent to the cam is the Control unit..............
4. The Control circuit will activate the Transistor to cut the current flow when the voltage is increasing/~~decreasing~~.
5. What happens, when the Transistor cuts the current flow to the primary coil? The magnetic field is collapsing and generating high voltage in the secondary coil......
6. Name the parts of the CDI system.

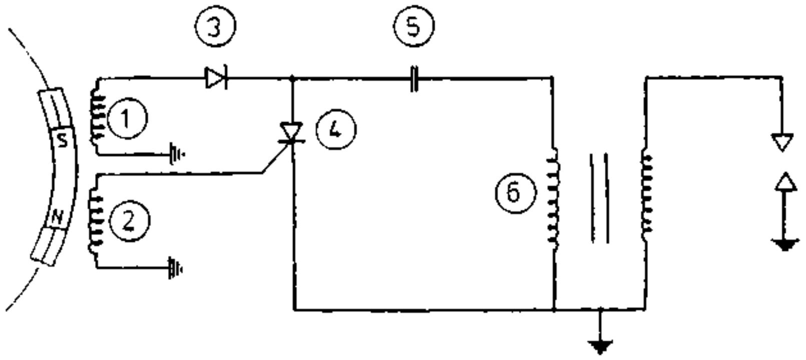

1 Charge coil.....
2 Pulser coil........
3 Diode.............
4 Thyristor (SRC)
5 Condenser.......
6 Primary coil.....

7. The device in the CDI system, which performs the same function as the contact points is ....

8. The Pulser coil/Charge coil is producing the current that triggers the SCR to open the circuit.

9. From the circuit of item 6:

   As the permanent magnet is moving past the coil 1, -alternating/direct- current will be generated and flowing through the diode by which it is changed into -alternating/ direct- current and storing in ....

10. When the SCR opens the circuit, the current as released by the condenser will flow through ....

11. High voltage current will flow to the spark plug when the magnetic wheel is cutting- the charge coil/the pulser coil.

12. Advantages of both the CDI and transistor ignition systems are:

    1. .... 3. ....

    2. .... 4. ....

13. Disadvantages of both the CDI and transistor ignition systems are:

    1. ....

    2. ....

7. The device in the CDI system, which performs the same function as the contact points is the Transistor...

8. The Pulser coil/~~Charge coil~~ is producing the current that triggers the SCR to open the circuit.

9. From the circuit of item 6:

   As the permanent magnet is moving past the coil 1,

   -alternating/~~direct~~- current will be generated and flowing through the diode by which it is changed into -~~alternating~~/ direct- current and storing in the condenser............

10. When the SCR opens the circuit, the current as released by the condenser will flow through the primary coil..............

11. High voltage current will flow to the spark plug when the magnetic wheel is cutting- ~~the charge coil~~/the pulser coil.

12. Advantages of both the CDI and transistor ignition systems are:

    1. Reduced maintenance..
    2. Longer live of spark plug
    3. No wearing of contact points
    4. Easy starting.........

13. Disadvantages of both the CDI and transistor ignition systems are:

    1. Expencive..
    2. Electronic devices ...not repairable.........

2.6 Maintenance and repair

2.6.1 Assemble and disassemble the ignition system

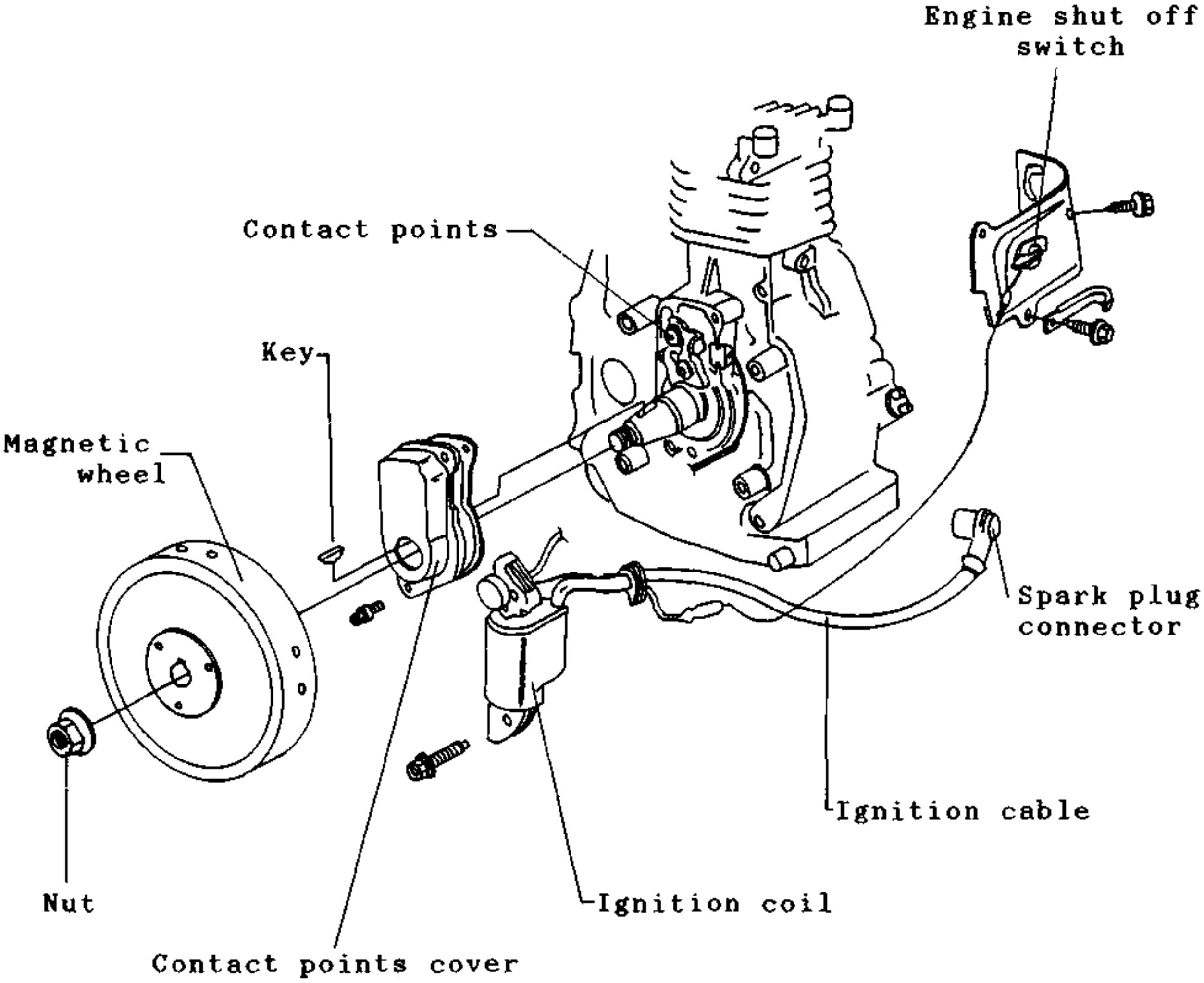

Removing:
- Special tool should be used to remove the magnetic wheel.
- Do not hammer the magnetic wheel, otherwise it will be damaged or spoiled.

Refitting:
- Clean the magnetic wheel completely before refitting.

Remark:
- The magnetic wheel nut must be tighten with a torque wrench at the correct torque according to the manufacture's manual.
- The specified torque = 6.0 - 7.0 kgm

2.6.2 Inspect, clean and adjust spark plugs

Inspecting conditions of a spark plug:

Conditions of electrodes	Cause	Remedy
dry and light brown	- normal engine operation	
dry and black	- fuel mixture too rich	- readjust the idle mixture screw - inspect choke and air filter
	- wrong heat range	- switch to hotter plug, e.g. from BP 7 ES to BP 6 ES
wet and black	- Oil leaking into the combustion chamber may be caused by worn piston rings or others	- inspect and repair piston rings, piston and cylinder
burned and eroded	- wrong heat range	- switch to colder plug, e.g. from BP 6 ES to BP 7 ES
white spot deposit	- aditive deposits from leaded fuel	- switch to hotter plug

Cleaning and adjusting a spark plug:

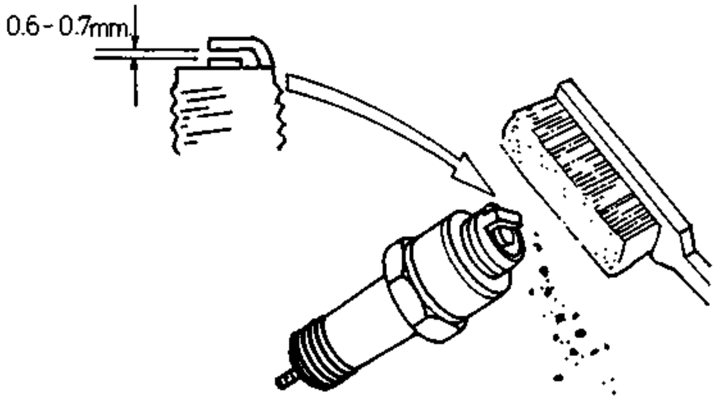

- clean the electrodes with a steel brush.
- adjust the spark plug gap according to manual

  (Standard spark plug gap = 0.6 - 0.7 mm)

2.6.3 Inspect the ignition coil

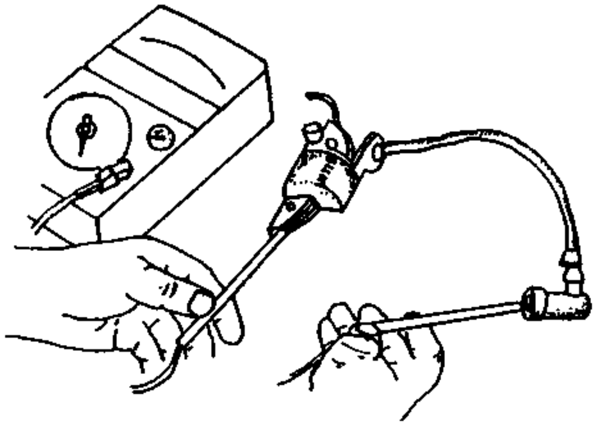

- disconnect the spark plug connector
- measure between the spark plug connector and the ignition ciol base with an ohmmeter

  standard resistance = 6.6 KΩ

Condition of ignition coil	Causes
Resistance of the primary coil is too low	- short circuit in coil
Resistance of the primary coil is too high	- dirty coil
Resistance of the secondary coil is too low	- short circuit in coil
Resistance of the secondary coil is too high	- dirty terminal

2.6.4 Inspect CDI and transistor ignition system

Primary coil:

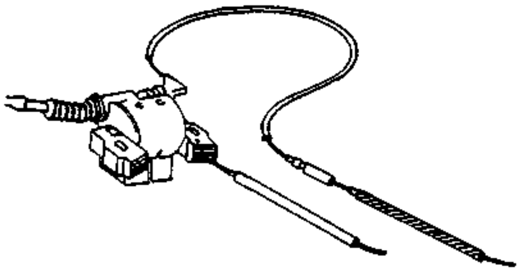

Use ohmmeter to check between the black cable (engine stop) and the core.

Standard resistance of primary coil:

for HONDA Model GX 110, 120, 140, 160	= 1.2 - 0.2 Ω
For HONDA Model GX 240, 340	= 0.7 - 0.9 Ω

Secondary coil:

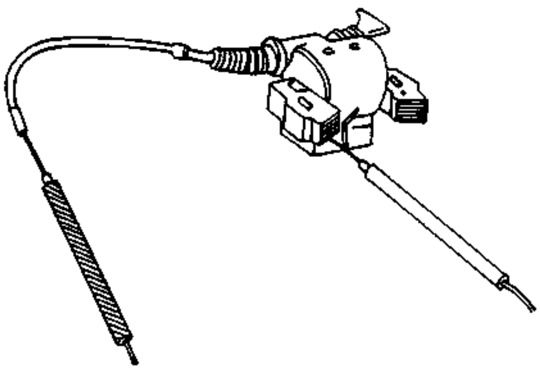

- Remove the spark plug lead
- Use ohmmeter to check between the spark plug lea and the core.

Standard resistance of secondary coil:

for HONDA Model GX 110, 140	= 12 - 2 KΩ
for HONDA Model GX 120, 160	= 6.5 - 8 KΩ
for HONDA Model GX 240, 340	= 6.3 - 7.7 KΩ

2.6.5 Inspect condenser

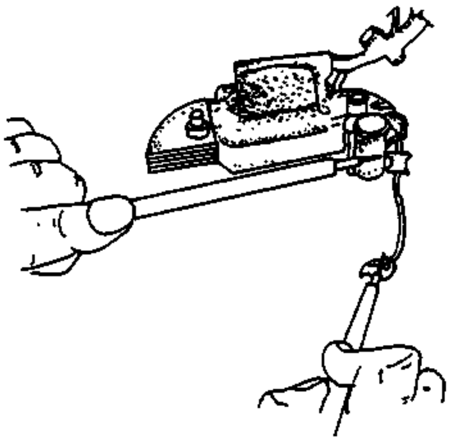

- measure the resistance of the condenser between positive and negative terminals
- if the indicater rises a little and falls back, the condenser is alright
- if the indicater does not rise or fall, it is damaged

Standard capacitive = 0.24 μF

Remark: If the contact points wear abnormally, then the condenser must be replaced.

Conditions of condenser	Faults
Too large capacitive	- Contact points are eroded
Too small capacitiv	- Contact points are eroded

2.6.6 Inspect and adjust contact points

Conditions of contact points:

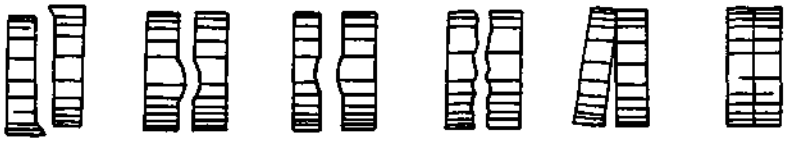

- Light gray contact points are normal.

- If burned, eroded or pitted, contact points must be replaced.

- If colour is normal and worn a little, then file them smooth.

Adjusting the contact points:

- Insufficient gap will cause contact points arcing and burning.
- Excessive gap will reduce the dwell angle of the contact points and thereby ceasing the ignition at high-speed.

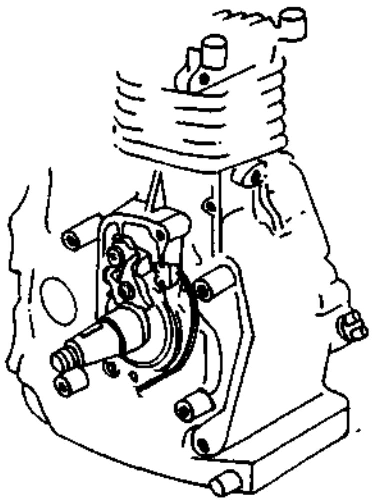

Operating steps:

- Turn the crank shaft until the cam opens the contact points fully.

- Measure the gap by using feeler gauge.

- Readjust the gap if it is not correct according to the manual.

(Standard contact point gap = 0.4 - 0.5 mm)

2.6.7 Adjust the ignition timing

Ignition timing	Faults
1. Advanced ignition	- Engine is knocking
	- Engine runs back
2. Retarded ignition	- Difficult to start
	- Engine lacks power
	- Engine is overheated

Adjusting the ignition timing:

a) by using timing tester

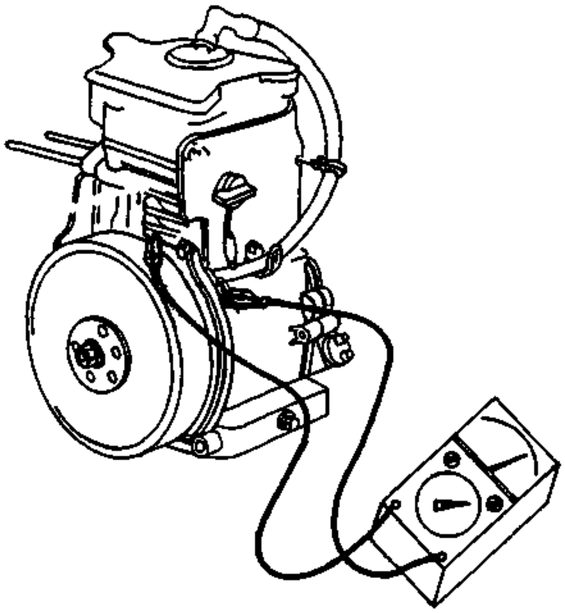

- Connect one lead of the timing tester to ground.
- Connect another lead of the timing tester to contact point terminal (ignition terminal of switch key)
- When the timing tester is switched on, sound should be heard if the contact points open, or vice versa.
- The position at which the contact points open, must be inlined with F, otherwise readjusting the ignition timing is needed.

b) by using special tool to identify the "F" mark

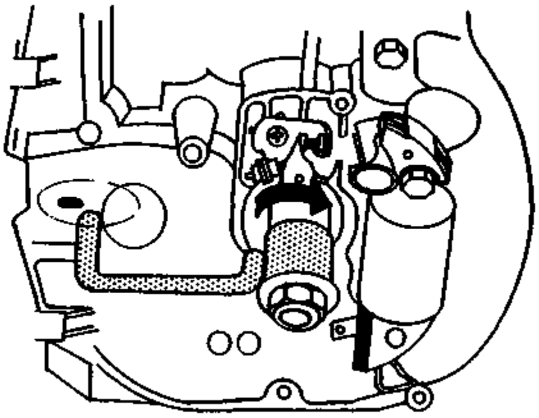

- Remove the magnetic wheel and the cover of contact points.
- Install the special tools to the crank shaft and tighten the nut.
- Turn the engine clockwise.
- At the position where the contact points open, the mark on the special tool must be inlined with the F mark.
- If it is out of inlined, then loosen the screw of the contact point base, and readjust it according to the mark.

c) Without using a special tool

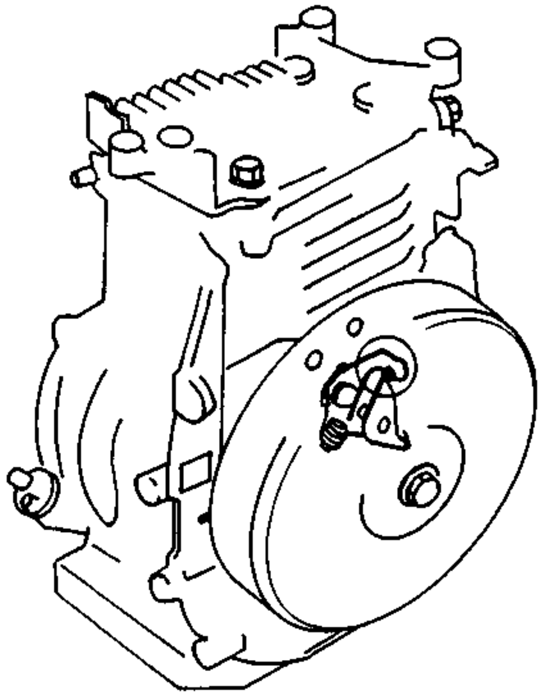

- Remove the magnetic wheel and the contact point cover, then reassemble the magnetic wheel temporarily to its position.
- Now the opening - closing of the contact points can be seen.
- Turn the magnetic wheel clockwise, at the point where the contact points are opening, the F mark on the magnetic wheel must be inlined with the mark of the engine.

2.6.8 Adjust gap between ignition coil and magnetic wheel

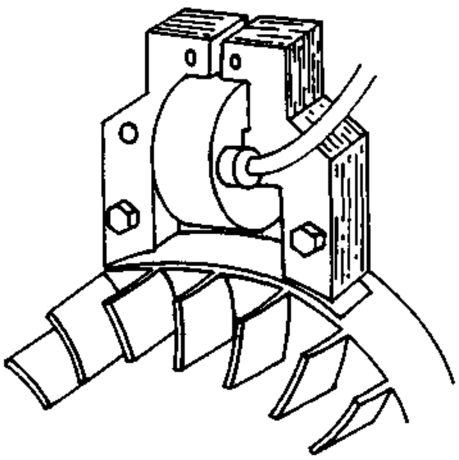

- Turn the engine until the permanent magnet is underneath the ignition coil
- Measure the gap by feeler gauge.

Standard gap = 0.4 - 0.2 mm.

If it is outside the standard value, then loosen the screw of the ignition coil and readjust the ignition coil up or down until the required gap is obtained.

2.6.9 Trouble shooting

Fault	Possible causes	Remedy
Engine cranks normally,but will not start	1. Low voltage circuit is broken.	- Inspect connections of ignition coil and contact points.
	2. Contact points sticking.	- Readjust.
	3. Burned contact points.	- Clean or replace.
	4. Incorrect ignition timing.	- Inspect and readjust the ignition timing.
	5. Damaged condenser.	- Replace the condenser.
	6. Damaged ignition coil	- Replace the ignition coil.
	7.	- Inspect ignition coil and spark plug cable.
	8. Foulded spark plug	- Clean and readjust or replace.
Engine lacks power	1. Incorrect ignition timing	- Inspect and readjust the ignition timing.
Engine is overheated	1. Retarded ignition timing	- Readjust the ignition timing.
Engine is back fired	1. Incorrect ignition timing	- Readjust the ignition timing.
	2. Wrong heat range of spark plug	- Use correct heat range.
Engine is knocking or pinging	1. Incorrect ignition timing	- Readjust the ignition timing.
	2. Incorrect contact point gap	- Readjust the contact points gap.

Tools: A set of wrenches, special tool for removing magnetic fly-wheel, Torque wrench, Filler gauge, Ohmmeter, Smooth file, Timing tester, a special tool for setting the position F, Air gun with hose

Equipement: Steel brush, Brass brush, Cleaning pan, Cloth

Manufacturer: .... Model ....

Type of ignition system : ....

Standard torque for magnetic flywheel : .... Nm

Standard resistance of ignition coil : ....

Standard inspection for C.D.I and transistor module :

- Primary coil : ....
- Secondary coil : ....

Standard capacitive of condenser : .... µF

Standard gap between ignition coil and magnetic flywheel .... mm

Standard gap between contact points .... mm

Sequence of operations	Inspection
1. Prepare tools and equipment	Condition of spark plug.
2. Remove spark plug.	☐ Normal ☐ Damaged
3. Clean spark plug.	☐ Use steel brush
4. Check and adjust electrode.	Obtained electrode gap
5. Remove starting unit.	☐ Normal
6. Remove blower cover and other obstruction.	☐ To be readjusted
7. Remove magnetic flywheel.	Use of tools.
	☐ Use special tools
	☐ Others ....
8. Remove all parts of ignition system.	Conditions of general parts.
	☐ Perfect ☐ Imperfect

Sequence of operations	Inspection
9. Check ignition coil.	Obtained reading .... ☐ Normal ☐ Damaged
10. Check CDI and transistor module.	Obtained reading ☐ Primary coil .... ☐ Secondary coil .... ☐ Normal ☐ Damaged
11. Check condenser	Condition of condenser ☐ Normal ☐ Damaged
12. Check contact points	Condition of contact points ☐ Normal ☐ Damaged
13. Reassemble those parts in their reverse order.	Reassemble ☐ Complete ☐ Incomplete
14. Adjust clearance between ignition coil and magnetic flywheel.	Standard clearance ...... mm.
15. Adjust gap of contact point.	Standard gap of contact points ...... mm.
16. Adjust ignition timing.	Ignition timing adjustment ☐ Use timing tester ☐ Others ....
17. Reassemble all parts.	Reassemble of all parts. ☐ Complete ☐ Incomplete
18. Clean and store toos-equipment.	☐ Complete ☐ Incomplete

Note : ....

....

....

....

3. Speed control system

3.1 Task of governor

- to maintain constant engine speeds during running under varying loads.

3.2 Types and function of governor

Governors can be classified into 2 types:

3.2.1 Pneumatic governor

Constant engine speed is controlled by means of air flowing from the blower upon the blade of governor, which is connected to throttle plate mechanism.

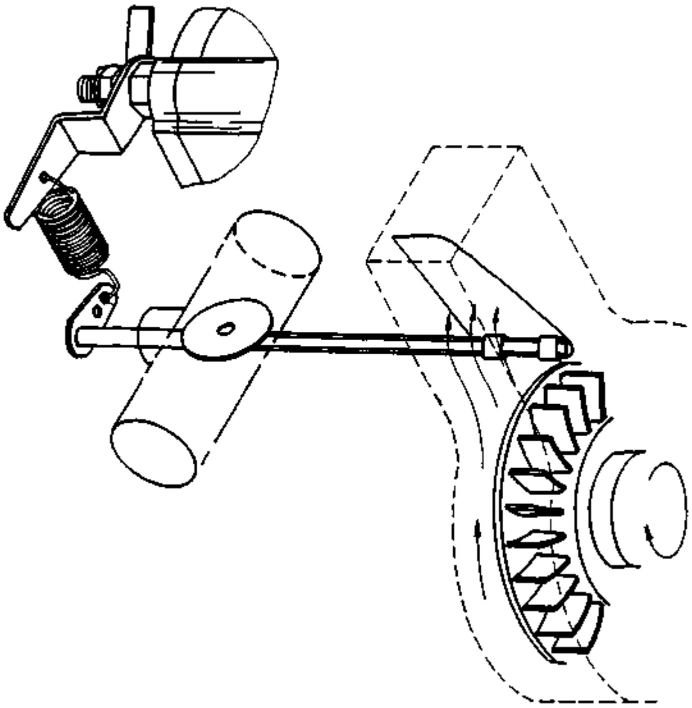

- As the engine speed increases, the flow of air is also increasing accordingly, and thereby turning the governor blade to turn the throttle plate in the direction to which the engine speed decreases until the throttle plat spring balances the force on the governor blade.

- When the engine is subjected to increasing load its spee will be decreasing. Thus, the air-force on the governor blade is also decreasing relatively, and surrendering to the force of throttle plate spring.
Therefore, the engine speed will be maintained constantl at every changing load.

3.2.2 Mechanical governor

This type of governor is operated by means of centrifugal force of the fly weights.

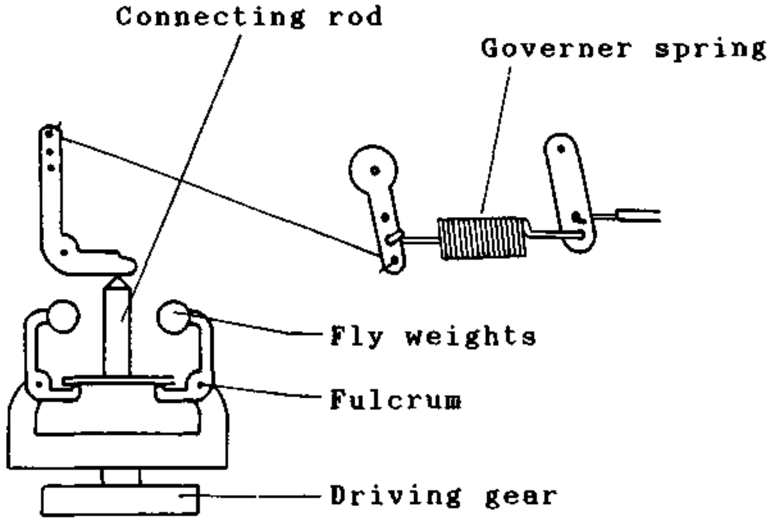

- As the engine speed decreases, the centrifugal forces of the flyweights are also decreasing, and thereby opens the linkgage of the throttle plate further. Thus, the engine speed increases to match a particular load.

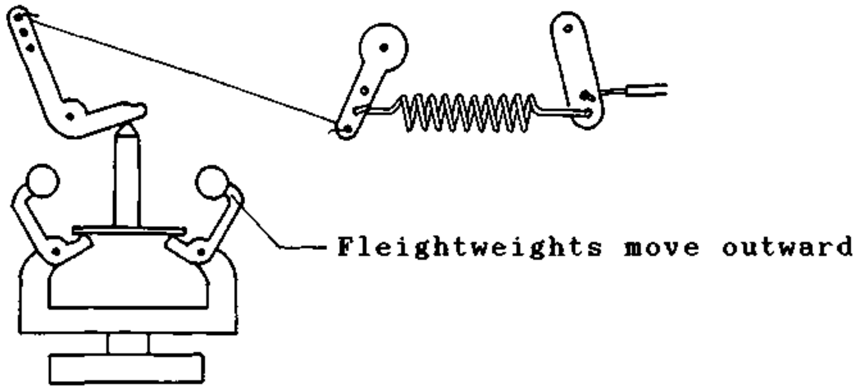

- As the engine speed increases, the fly weights move away further and thereby reducing the opening of the throttle plate. Thus, the engine speed is coming down. Therefore, the engine speed will be maintained constantly at every changing load.

Fill in the blanks and underline the correct answer.

1. Governor is for ....

2. Governor is classified into ..... types, i.e. ....

   ....

3. At the engine stops, the position of the throttle plate will be -fully opened/ fully closed-.

4. The tensioning force of spring will tend to -increase/decrease- the engine speed.

5. Governor that has fly weights is of the .... type.

6. As the engine speed is on the increase, the flyweights will be -retracted/expanded-.

7. When the centrifugal forces of the flyweights are reducing, the throttle plate will be progressively -opened/closed-.

Fill in the blanks and underline the correct answer.

1. Governor is for maintaining constant engine speed.......
2. Governor is classified into .2.. types, i.e. Pneumatic.. governor a. Mechanical governor.......................
3. At the engine stops, the position of the throttle plate will be -~~fully opened~~/ fully closed-.
4. The tensioning force of spring will tend to -increase/~~decrease~~- the engine speed.
5. Governor that has fly weights is of the mechanial type.
6. As the engine speed is on the increase, the flyweights will be -~~retracted~~/expanded-.
7. When the centrifugal forces of the flyweights are reducing, the throttle plate will be progressively -opened/~~closed~~-.

3.3 Repair and maintenance

3.3.1 Adjusting the pneumatic governor

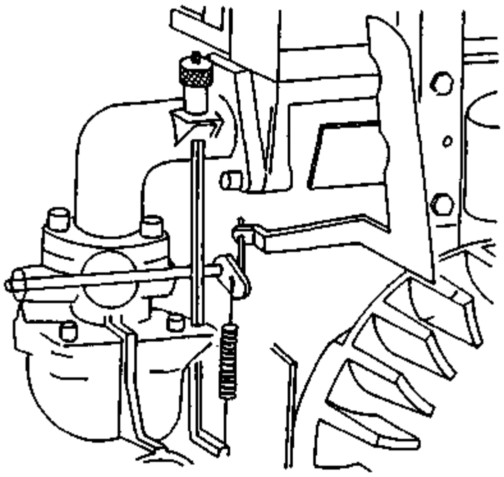

Sequence of operations:

1. Screw on the governor spring fully.
2. Start the engine.
3. Unscrew the governor spring gradually until the required engine speed is obtained.

Remark: - The further the screw is tightened the lower the engine speed.
- The further the screw is loosened the higher the engine speed.

3.3.2 Adjusting the mechanical governor

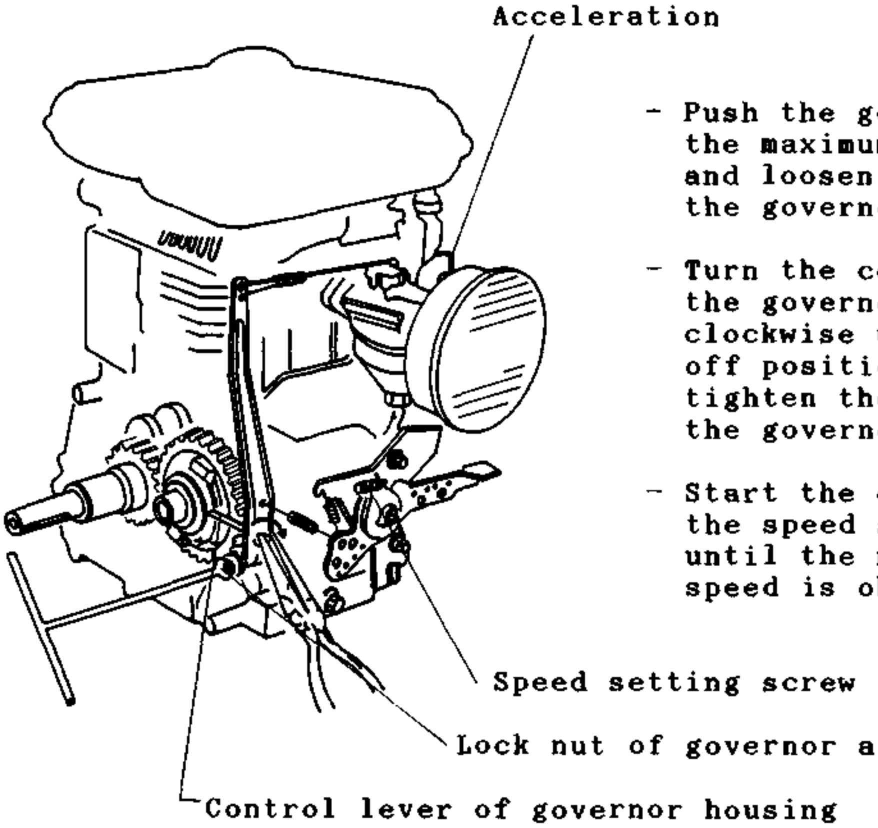

- Push the governor arm to the maximum speed position and loosen the lock nut of the governor arm.
- Turn the control lever of the governor housing clockwise until stop (shut off position), then tighten the lock nut of the governor arm.
- Start the engine; adjust the speed setting screw until the maximum engine speed is obtained.

Standard maximum speed 4000 rev/min.

Tools: a set of wrenches, air gun with hose
Equipement: Benzene, oil can, cleaaning tray, cloth

a) Pneumatic governer

Manufacturer .... Model ....

Sequence of operations	Inspection
1. Remove the blower cover.	- Condition of blower cover
2. Remove the governor unit. Caution : Be aware of mixing up positions of governor mechanism	- Condition of governor spring Normal Weakened Others ....
3. Reassemble in reverse order.	

b) Mechanical governer

Manufacturer .... Model ....

Sequence of operations	Inspection
1. Remove carburetter and governor arm. Caution beware of benzene	- Tension of the throttle plate spring. Normal Weakened
2. Remove governor unit from the carburetter.	- Straighteness of the governor arm Normal Bent
3. Reassemble in reverse order	

Remember: The short end of the throttle plate spring is on the carburetter side.

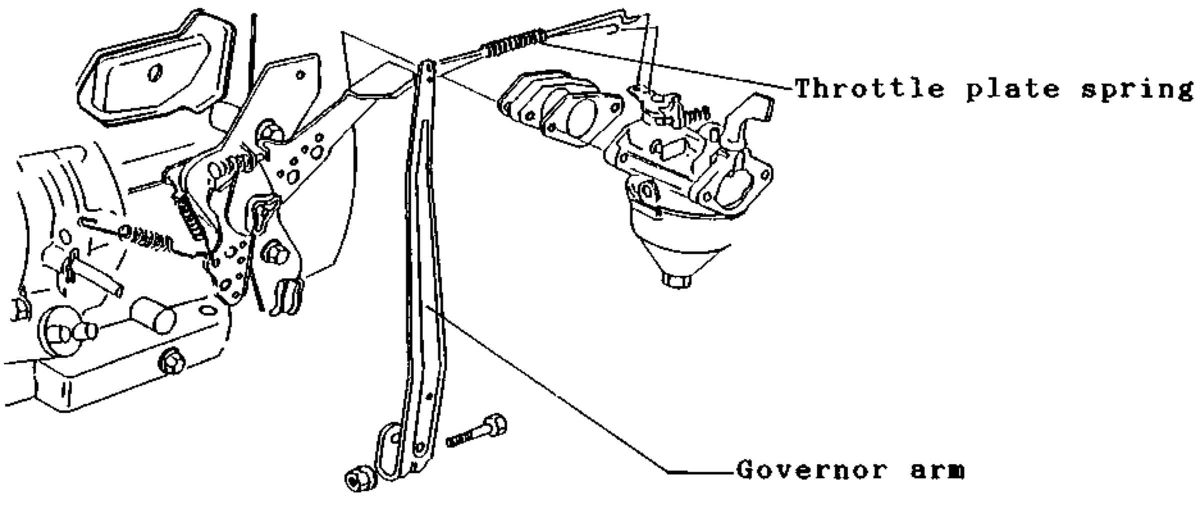

4. Valve mechanism

4.1 Task of valve mechanism

to open/close intake air-fuel mixture and exhaust gas in and out the cylinder, according to various strokes of engine.

4.2 Types and function

Valve mechanism is classified into 2 types:

4.2.1 Overhead valve

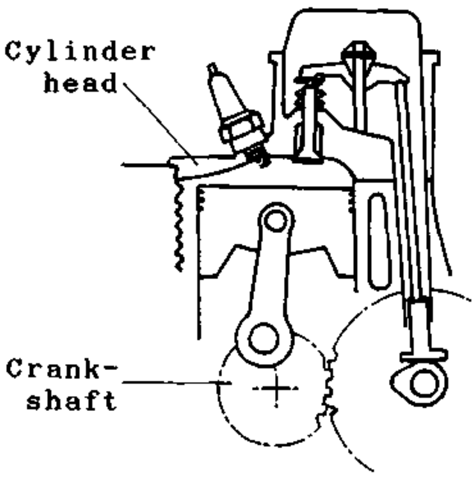

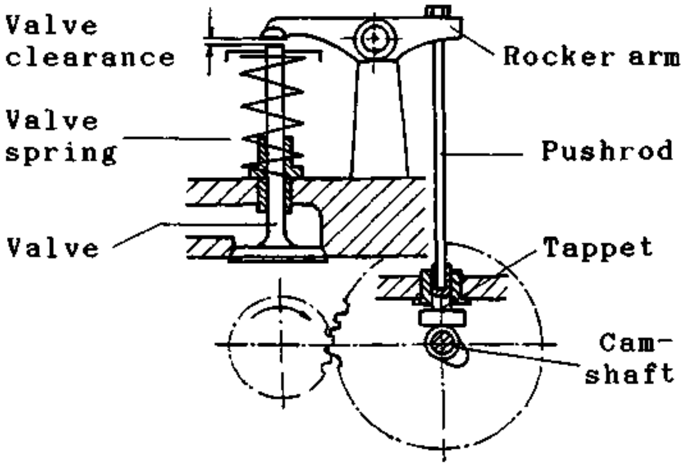

Crankshaft speed : Camshaft speed = 2 : 1

As the camshaft is driven by the crankshaft gear, the tappet is left and thereby the push rod pushes the rocker arm. The valve is, thus, opened as the pushing force of the rocker arm prevails that of the spring. When the cam turns beyond its lift the valve is closed under the force of valve spring.

Opening/Closing of valves is timed according to various strokes of the engine.

Advantages	Disadvantages
1. Low intake flow resistance.	- Complicated cylinder head.
2. Improved engine power.	- Engine is tall.
3. Valve servicing is easy.	- High number of parts of valve mechanism.

4.2.2 Side Valve

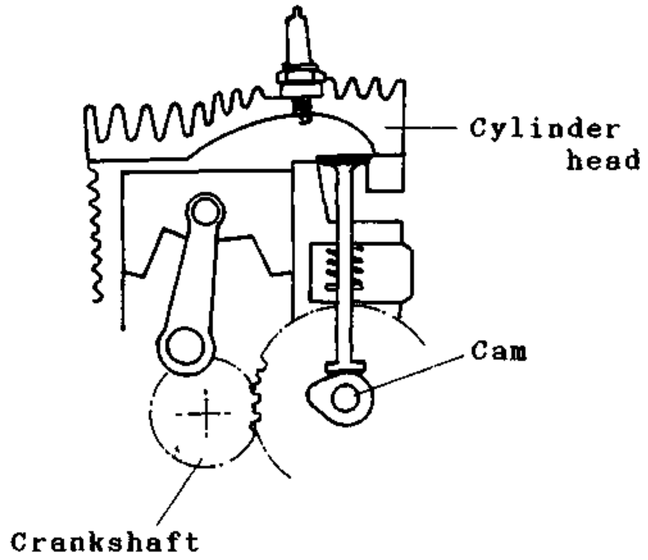

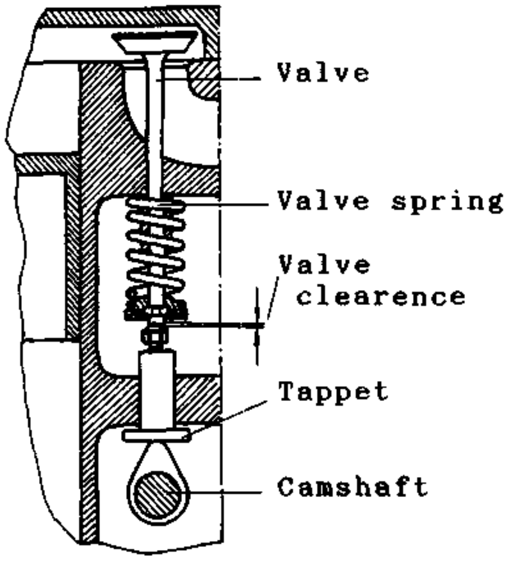

- As the camshaft is driven by the crankshaft gear, the valve is pushed to open by the cam via the tappet.

Advantages	Disadvantages
1. Valve arrangement is easy.	- High intake and exhaust flow resistance.
2. Small number of parts of valve mechanism.	- Cambustion chamber is not compact.
	- Inefficient engine power.

Complete the statements.

1. Valve arrangement for 4 stroke small engines can be accomplished in ..... ways, that is ....

2. Name various parts of the valve mechanism.

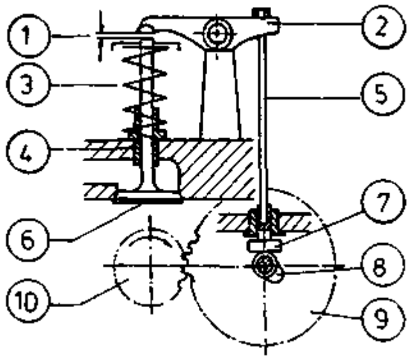

1 .... 6..................

2 .... 7 ....

3 .... 8 ....

4 .... 9 ....

5 ....10 ....

3. Crankshaft speed : camshaft speed = ... : .....

4. As the engine makes 1 complete turn, the intake valve will open and close for ..... time whereas the exhaust valve does the same for ..... time.

5. Both intake and exhaust valves can be opened or closed by means of ....

6. The advantages of the overhead valve engine are :

   1. ....
   2. ....
   3. ....

7. The advantages of the side valve engine are :

   1. ....
   2. ....

Complete the statements.

1. Valve arrangement for 4 stroke small engines can be accomplished in 2 ways, that is Side valve and Overhead valve
2. Name various parts of the valve mechanism.

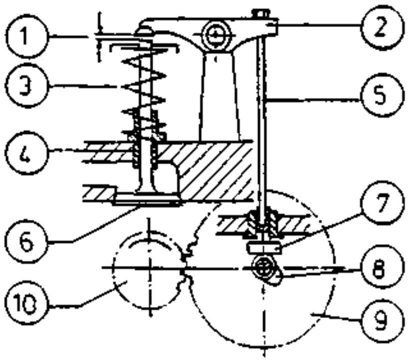

1 Valve clearance
2 Rocker arm
3 Valve spring
4 Valve guidance
5 Pushrod
6 Valve
7 Tappet
8 Cam
9 Timing gear (cam)
10 Timing gear (crankshaft)

3. Crankshaft speed : camshaft speed = 2 : 1
4. As the engine makes 1 complete turn, the intake valve will open and close for 1 time whereas the exhaust valve does the same for 1 time.
5. Both intake and exhaust valves can be opened or closed by means of Cam, Tappet, Pushrod and Rockerarm.
6. The advantages of the overhead valve engine are :
   1. Low intake flow resistance
   2. Improved engine power
   3. Valve service is easy
7. The advantages of the side valve engine are :
   1. Valve arrangement is easy
   2. Small number of parts

4.3 Compression reduction mechanism

4.3.1 Purpose of compression reduction mechanism

To reduce compression in the cylinder during engine starting, thus, the power to start the engine is at minimum..

4.3.2 Components and function

This mechanism will open the exhaust valve during the starting string is pulled out.

a) When starting the engine

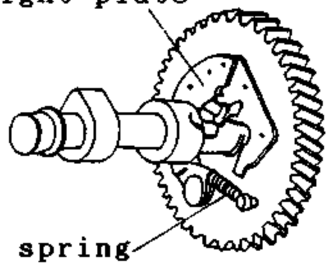

When the engine is at rest, the counter weight plate is kept in its original position by means of the retracting spring.

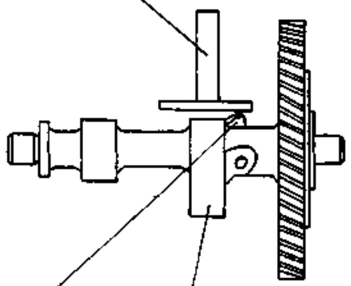

The compression reduction cam is on its peak which is above the heel of the cam.

When the starting string is pulled out, the compression reduction cam will slightly raise the valve tappet to reduce compression. This arrangement will ease the stert of the engine due to the engine can run fast.

b) During engine running

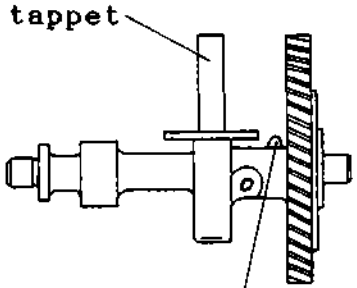

When the engine is running at the speed of 800 rev/min, the counterweight plate is forced outward by the centrifugal force.

The compression reduction cam is thereby pulled down and away from the valve tappet.

4.3 Compression reduction mechanism

Complete the statements or underline the correct answers.

1. The purpose of compression-reduction is ....
   ....
2. Compression -reduction can be accomplished by -opening/closing- the .... valve.
3. Name various parts of the compression-reduction mechanism.

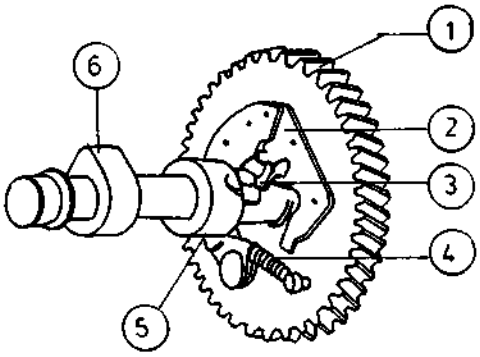

1. ....
2. ....
3. ....
4. ....
5. ....
6. ....

4. When the starting string is pulled, the .... will lift the tappet and the .... is opened to allow the exhaust gas to escape.
5. As the engine is running, the centrifugal force of the counter-weights will be -increasing/decreasing- and causing them to -expand/retract.

4.3 Compression reduction mechanism

Complete the statements or underline the correct answers.

1. The purpose of compression-reduction is to reduce compression in the cylinder during engine start.
2. Compression -reduction can be accomplished by -opening/closing- the exhaust....... valve.
3. Name various parts of the compression-reduction mechanism.

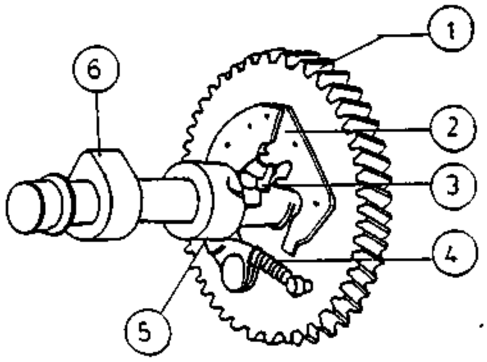

1. Timing gear
2. Counter weight plate
3. Compression reduction cam
4. Retracting spring
5. Cam for exhaust valve
6. Cam for intake valve

4. When the starting string is pulled, the compression redc. will lift the tappet and the exhaust valve. is opened to allow the exhaust gas to escape.
5. As the engine is running, the centrifugal force of the counter-weights will be -increasing/~~decreasing~~- and causing them to -~~expand~~/retract.

4.4 Repair and maintenance

4.4.1 Removal and refitting of valve mechanism

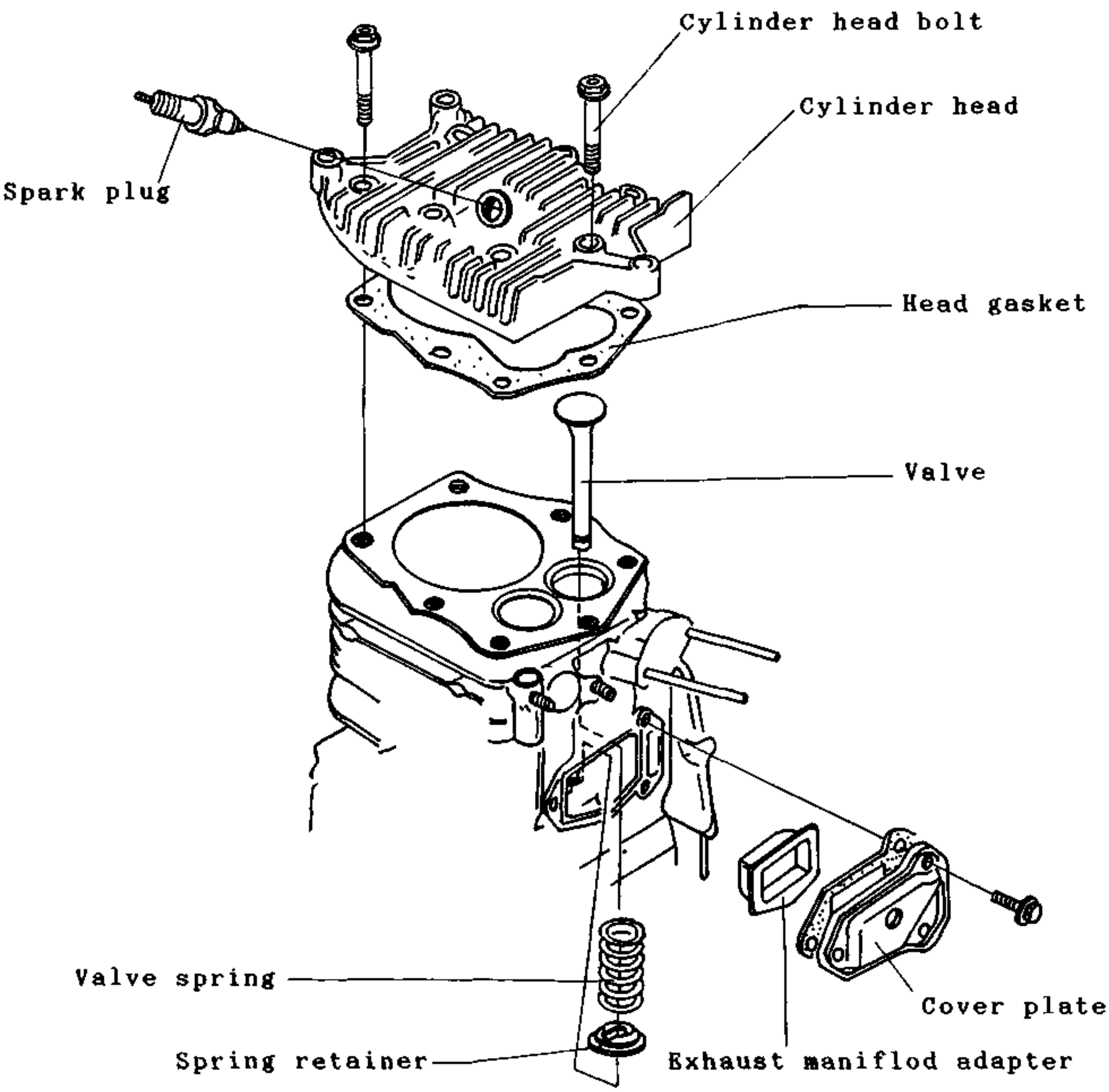

Remark : For valve mechanism removal, cylinder head and valves must be removed accordingly to the specified numbers and reassembled in their reverse order.

4.4.2 Removal/Reassemble of the cylinder head

a) Removing cylinder head

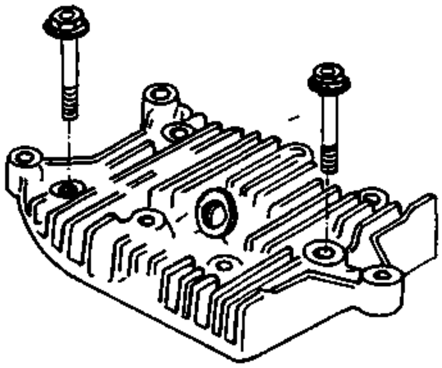

- Loosen all bolts in reverse order
- During loosening, gradual torque settings must be distributed over each bolt.

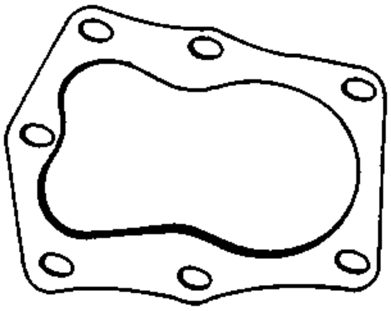

- Mating surface of the gasket, between the cylinder head and the cylinder block, must be cleaned and of no traces.

b) Cleaning cylinder head

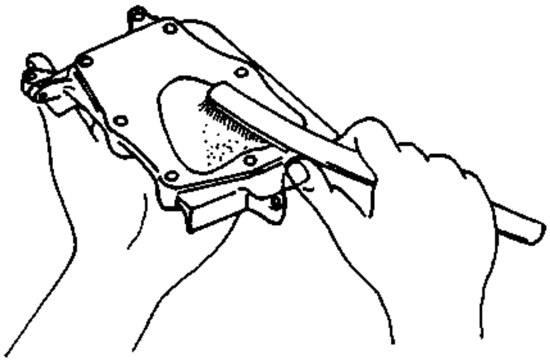

- Decarbonize the combustion chamber and clean with benzene and dry with air gun.

Remark:

In removing carbon deposits, a broken piece of saw blade which is ground unsharp may be used.

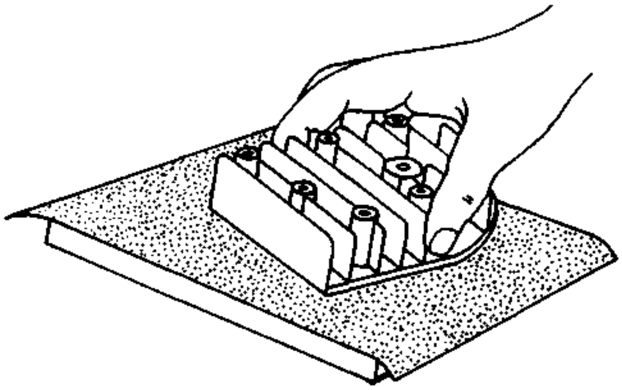

- In case, the cylinder head is distorted or bent, then grind its mating surface with fine grain sand paper (No. 400), which places on a smooth, flat surface level.

Remarks:
- Contaminated dirt on fins of the cylinder head causes poor heat dissipation.
- After scraping and cleaning the fins, the cylinder head must be cleaned with benzene and dried with air gun.

c) Refitting the cylinder head

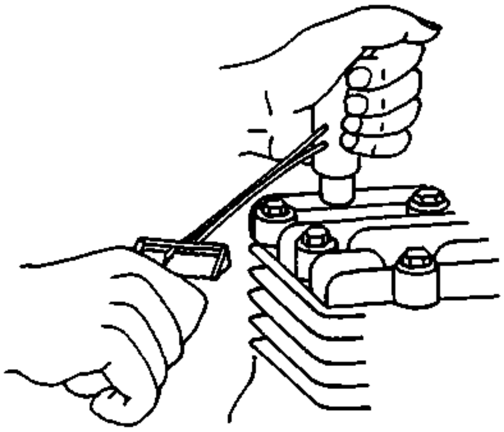

- Tighten the cylinder head bolts in their reverse sequence by using the torgue wrench.
- The required tightening torque must be distributed gradually over successive settings.

  Remark: Required tightening torque 24 - 26 Nm

4.4.3 Removal/Reassemble of the valves

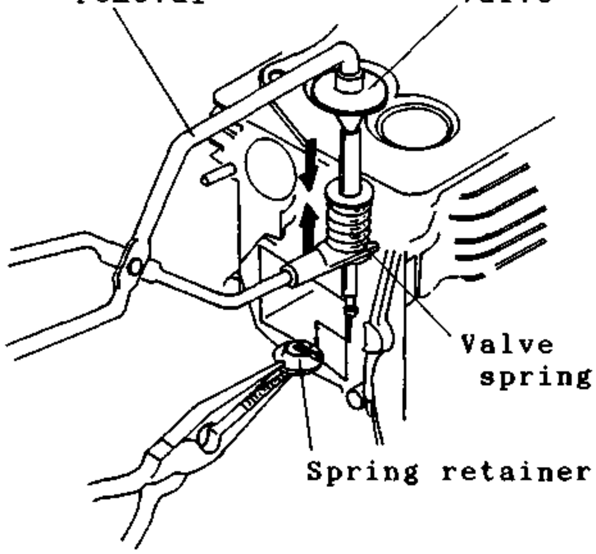

Removal:

Press the valve spring with pliers and remove the spring retainer, then release the pliers and remove valve and valve spring.

Reassemble:

Insert valve and valve spring, press the spring with pliers and insert the valve retainer.

Caution: Check, if the spring retainer is in the right position!

4.4.4 Valve spring

a) Measuring length of valve spring

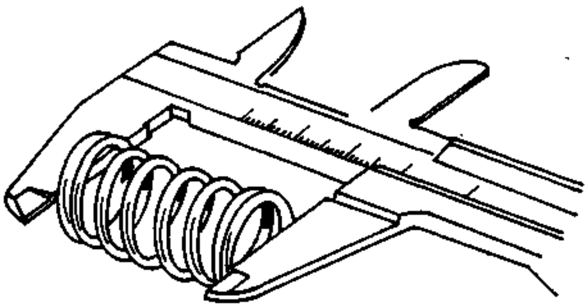

- If the length of spring is shorter than the specification then the spring is weakened.

Standard lenght	36.7 mm
Minimum length	35.2 mm

a) Checking squareness

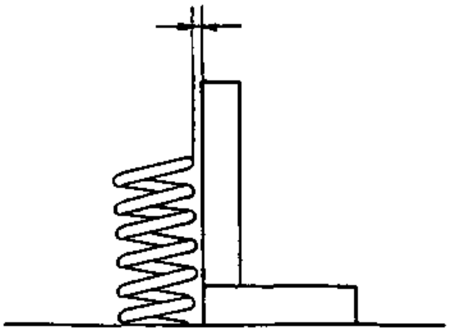

- Turn the spring around itself against the square and observe any diviation.

  Remark: Deviation should not exceed 2 mm

c) Checking strength of spring

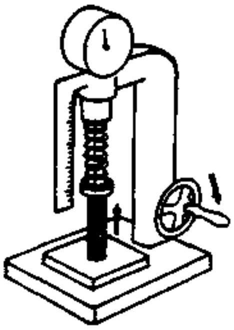

- Set the height of the tester to the specification and read the obtained valve on the dial

4.4.5 Valve

a) Measuring diameter of valve stem

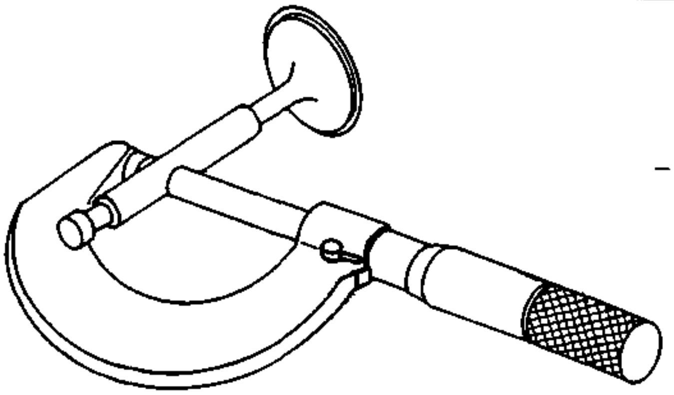

- Compare the obtained reading with that of the manual.

b) Checking straightness of the valve stem

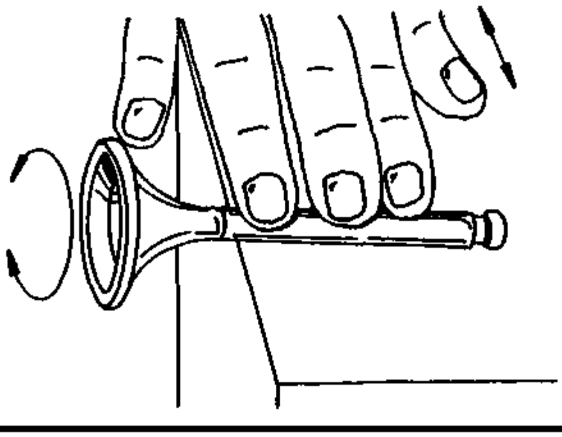

- Roll the valve stem over the surface level, notice for any bending. Replace if it is bented.

c) Checking valve face, margin, and valve stem

Valve margin ...

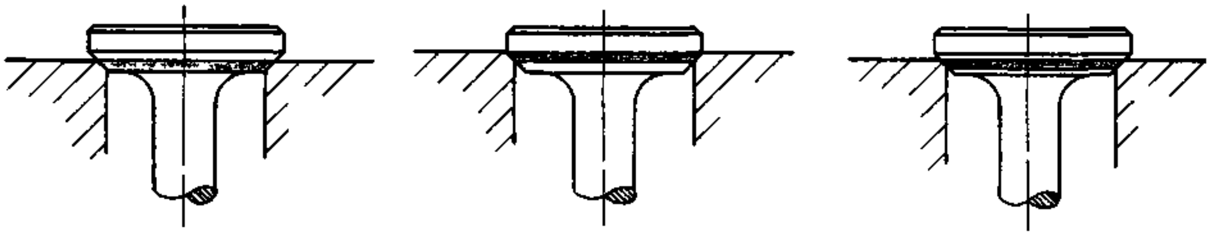

- to high
- to low
- correct

If valve foot is not smooth, then grind it with oil stone.

4.4.6 Valve seat

a) Measuring width of valve seat

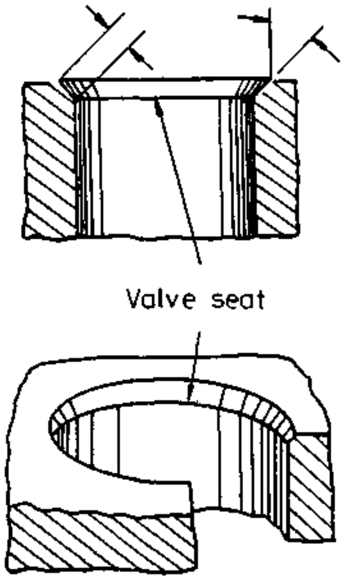

- Measure width of valve seat with vernier caliper.
- Recut the valve seat with the valve seat cutter, if its widt is less than that of the specification.

a) Valve cutting

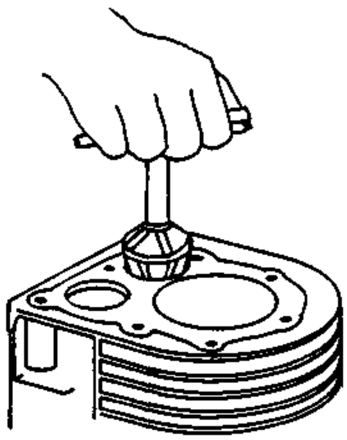

- cut the valve seat with 90 valve seat cutter.
- Recut the valve seat with the smooth cutter.
- Final cut with the 90 valve seat cutter.

b) Valve grinding

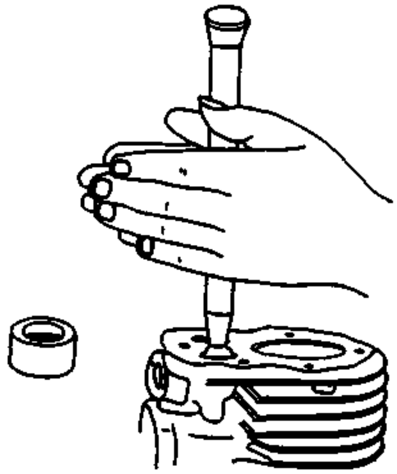

- Smear the vlave seat lightly with carborundum paste.
- Hold the valve by the rubber of the grinding tool. Turn the grinding tool to tub the valve face against valve seat.
- Clean the ground valve seat and valve face.

4.4.7 Valve guide

a) Measuring bore of the valve guide

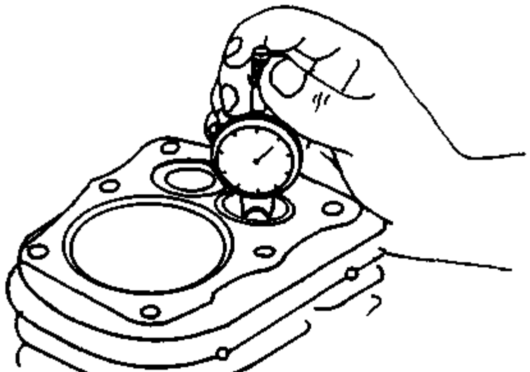

- Measure the bore with the dial indicator.
- Replace the valve guide if the obtained reading is beyond that of the specification.

b) Removing valve guide

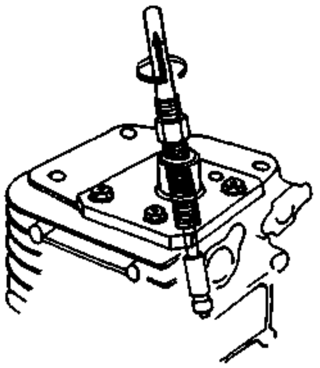

- Mount the special tool to the cylinder head by tightening 3 nuts.
- Screw in the valve guide extractor and screw on the nut underneath the valve guide.
- Unscrew the valve guide extractor until the valve guide is out.

c) Guide and its bore

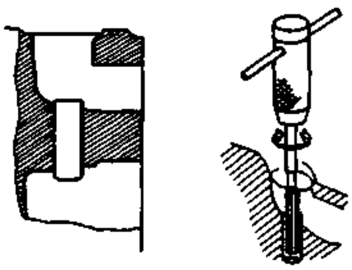

- Screw in the extractor to pull the valve guide.
- The valve guide must be pulled in and positioned correctly.
- Remove the nut and the extractor.

d) Reassembling valve guide

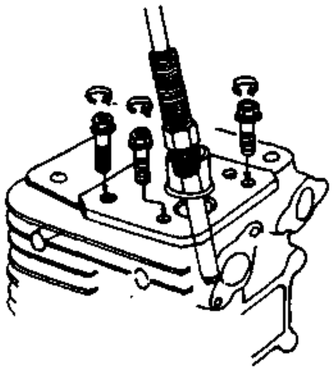

- Reverse the valve guide extractor.
- Fix the flange to the cylinder head and screw on the nut tightly.
- Insert the valve guide onto the extractor and hold it with the nut.
- Oil must be applied to the valve guide and its bore before reassembling.

4.4.8 Valve adjustment

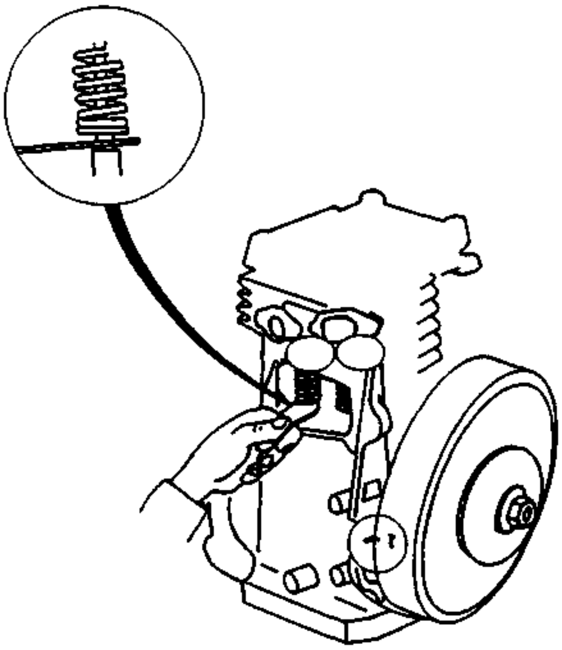

- Turn the engine until the piston is at the top of compression stroke.
- Measure the valve clearance by the feeler gauge.
- Adjust the valve clearance to the specification.

Valve clearance specification 0.04-0.12 mm

- Excessive valve clearance : change valve or tappet
- Insufficient valve clearnace : grind valve stem with oil stone.

Tools: a set of wrenches, Spark plug wrench, Torque wrench, Socket wrench and handle, Feeler gauge, Vernier caliper, Spring strength tester, dial indicater

Eqwuipement: Benzene, Oil caan, Cleaning pan, Cloth, Brass brush, Sand paper (400), broken saw blade, Oil stone

Manufacturer .... Model ....

Type of valve arrangement ....

Compression-reduction mechanism ☐ Yes ☐ No

Torque for cylinder head hold-down screw ....Nm

Standard lenght of valve spring .... mm

Limited deviation of valve spring squareness .... mm

Standard strength of valve spring ....

Standard diameter of valve stem .... mm

Standard width of valve seat .... mm

Standard bore of valve guide .... mm

Standard valve clearance .... mm

Sequence of operations	Inspection
1. Prepare tools and equipment.	
2. Close fuel valve and disconnect fuel hose.	
3. Remove fuel tank.	
4. Remove blower cover and any obstruction.	
5. Remove cylinder head by loosening from the outmost screw toward center.	
6. Remove head gasket.	- Condition of head gasket ☐ Normal ☐ Damaged
7. Clean cylinder head. Remark: If the cylinder head is bent or distorted, grind it with sand paper over the surface level.	- Condition of cylinder head ☐ Normal ☐ Dirty ☐ Craked ☐ Bent, disorted

Sequence of operation	Inspection
8. Remove carburetter.	
9. Remove side cover plate.	
10. Remove valve springs.	
11. Remove vlaves.	
12. Clean valve unit and valve seats and arrange them in good order.	
13. Check length of valve spring.	- Obtained reading .... mm. ☐ Normal ☐ Damaged
14. Check squareness of valve spring.	- Obtained reading .... mm. ☐ Normal ☐ Damaged
15. Check strength of valve spring.	- Correct to specification
16. Measure diameter of valve	- Obtained reading .... mm. ☐ Normal ☐ Worn
17. Check straightness of valve	☐ Normal ☐ Distorted, bent
18. Check valve face.	☐ Normal ☐ Worn
19. Check margin of valve seat.	- Obtained reading .... mm. ☐ Normal ☐ Worn
20. Check width of valve seat.	- Obtained reading .... mm. ☐ Normal ☐ Worn

Remark: If excessive wear on valve seats, then recut the valve seats and regrind it.

21. Check bore of valve guide.	- Obtained reading .... mm. ☐ Normal ☐ Worn

Remark: If excessive wear on valve guides then remove and replace the valve guides by using the special tool. I

22. Reassemble all components in their reverse order.	Reassembling ☐ Complete ☐ Incomplete
23. Adjust valve clearance.	- Standard valve clearance .... mm.
24. Clean and store all tools and equipment.	Note: ....

5. Crankshaft mechanism

5.1 Components and functions of crankshaft mechanism

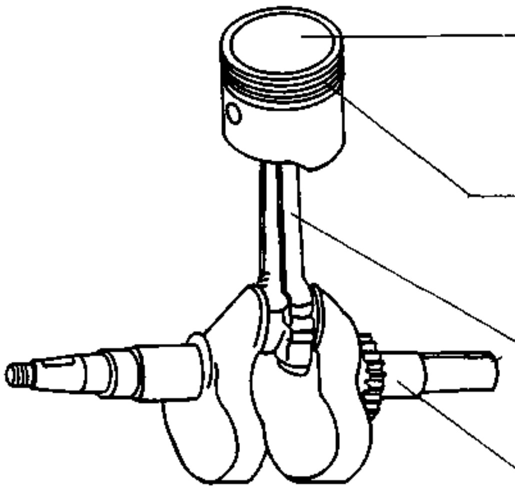

Piston:
Moving up-down in the cylinder according to various engine strokes.

Piston rings:
A series of seals to prevent leakage of combustion gas and scrape oil in cylinder.

Connecting rod:
Transmitting force from piston to crankshaft.

Crankshaft:
Converting reciprocating force into rotating force.

5.1.1 Piston and piston rings

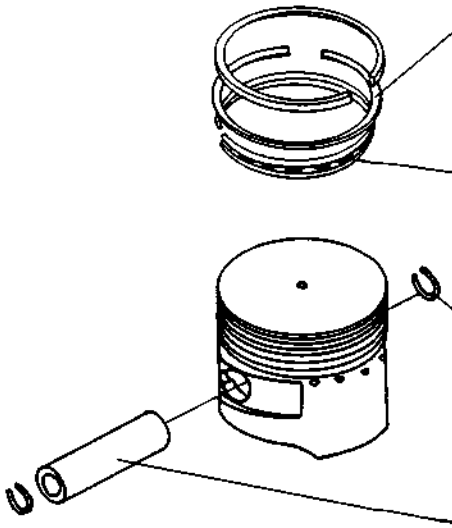

Compression rings:
Are acting like seals to prevent leakage of combustion gases. There are 2 of them.

Oil control ring:
Scrapes excess oil from entering into the combustion chamber. There is 1 ring.

Lock ring:
Keep the gudgeon pin centered in the connecting rod.

Gudgeon pin:
Links the piston to the connecting rod.

5.1.2 Connecting rod and connecting rod bearings

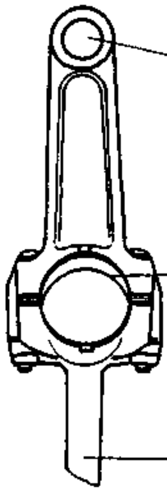

Small-end bearing:
The upper end of connecting rod has a bush bearing for connecting with the gudgeon pin.

Big-end bearing:
The lower end of connecting rod has bearing shells for connecting with the crankshaft.

Oil splasher

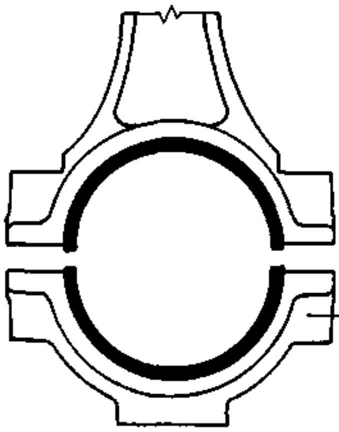

The big-end bearing shells split in two halves. The upper shell fixes with the connecting rod, the lower one with the connecting rod cap.

Connecting rod cap

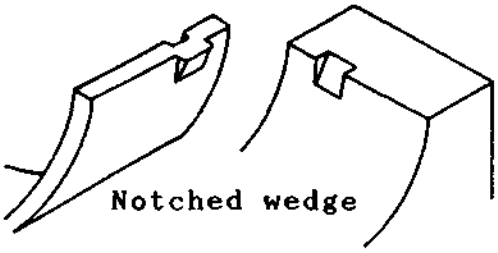

The bearing shells are positioned by the notched wedges and grooves on the connecting rod and connecting rod cap.

5.1.3 Crankshaft

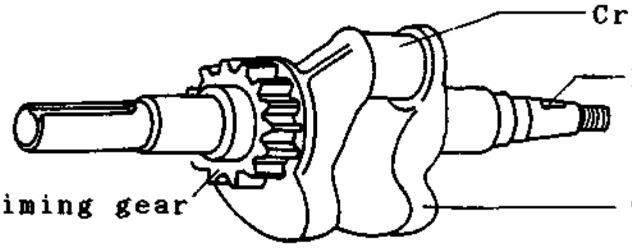

- Crankpin journal is for connecting with the connecting rod.
- Timing gear is for driving the camshaft.
- Key way is for connecting with the magnetic wheel.
- Counterweight is for damping the engine vibration.

1. Name the parts of the crankshaft mechanism.

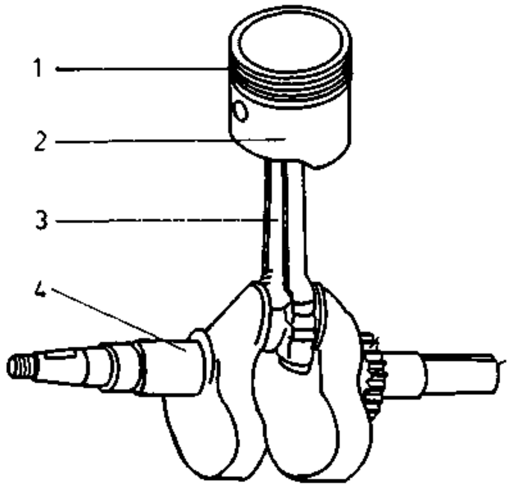

1. ....
2. ....
3. ....
4. ....

2. Make a cross in front of the correct statements

... 1. The part of the piston that bears the impact force mostly is the piston skirt.

... 2. Piston rings act as a series of seals to prevent leakage of combustion gases.

... 3. Compression rings and oil control ring are exchangeable.

... 4. Connecting rod transfers the force from piston to crankshaft.

... 5. Big-end bearing shells can be inserted to connecting rod with regardless of their pisitions.

... 6. Crankshaft converts reciprocating motion into rotary motion.

... 7. Timing gear of the crankshaft is for setting the ignition timing.

1. Name the parts of the crankshaft mechanism.

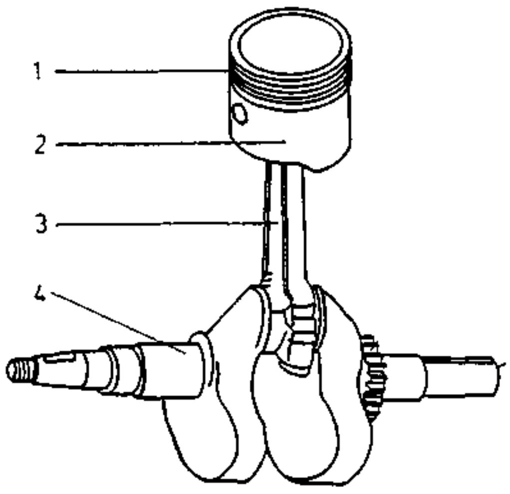

1. Piston rings..........
2. Piston................
3. Connecting rod.......
4. Crankshaft..........

2. Make a cross in front of the correct statements

... 1. The part of the piston that bears the impact force mostly is the piston skirt.

.X. 2. Piston rings act as a series of seals to prevent leakage of combustion gases.

... 3. Compression rings and oil control ring are exchangeable.

.X. 4. Connecting rod transfers the force from piston to crankshaft.

... 5. Big-end bearing shells can be inserted to connecting rod with regardless of their pisitions.

X. 6. Crankshaft converts reciprocating motion into rotary motion.

... 7. Timing gear of the crankshaft is for setting the ignition timing.

5.2 Repair and maintenance

5.2.1 Testing the compression

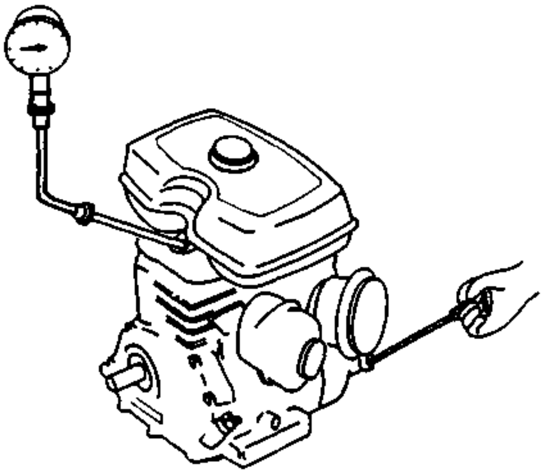

Sequence of operations:

- Remove the spark plug.
- Install the pressure gauge in the spark plug hole.
- Pull the string to crank the engine hardly for several times, and read the pressure.

Standard minimum compression = 6 bar

Caution:

- During spark plug removal, be aware of dust falling into the cylinder.
- Pressure gauge should be cleaned before installing.

5.2.1 Dismantling-Reassembling components of engine

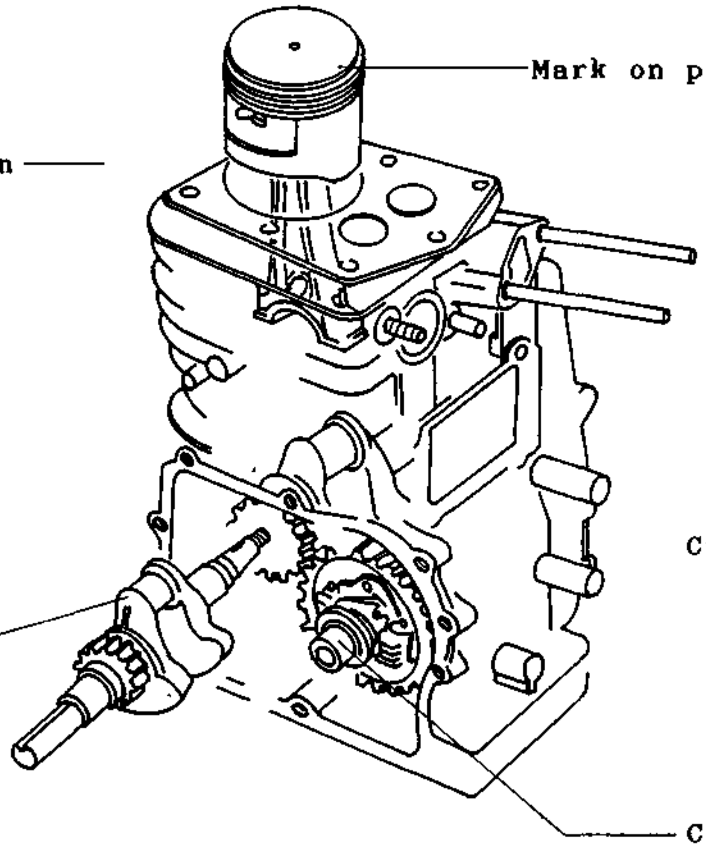

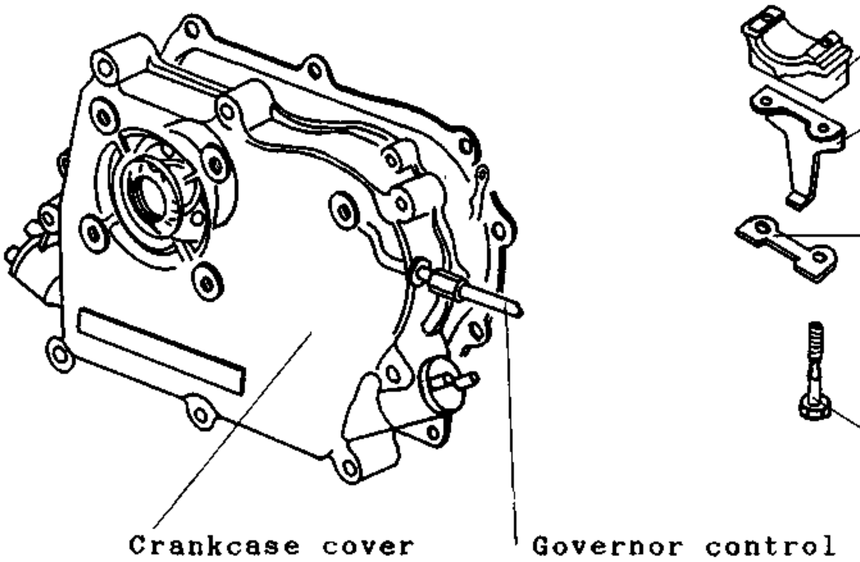

a) Crankcase cover

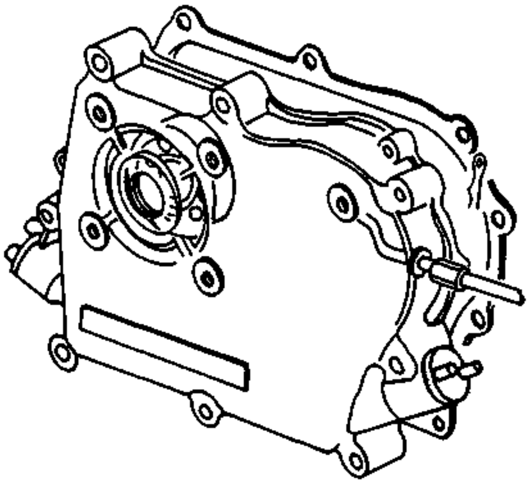

Removal:

1. Remove key on crankshaft if any.
2. Remove all screws of crankcase cover.
3. Tap the crankcase cover around gently with a plastic head hamer.
4. Remove the crankcase cover slowly.

Caution: Gasket may tear off and seal be damaged.

b) Camshaft

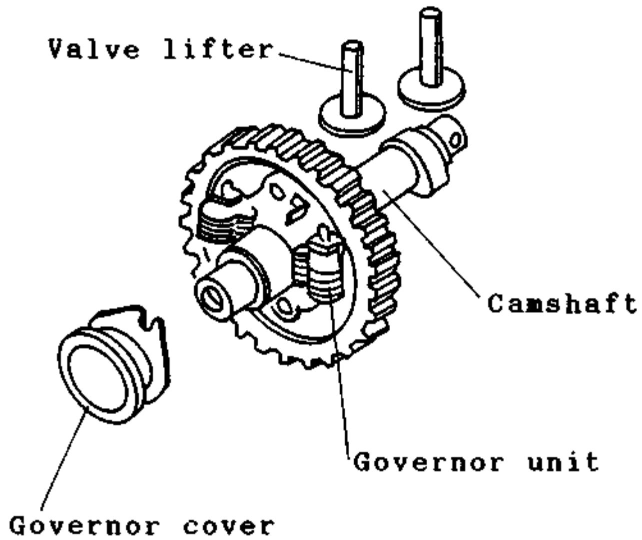

Removal:

1. Turn the crankshaft until the piston is at the top of the compression stroke.
2. Pull the camshaft assembly out.
3. Remove the valve lifters.

Remark: Governor unit is fixed to the camshaft assembly.

c) Connecting-rod cap

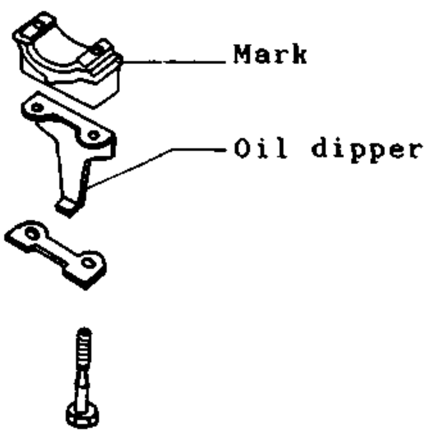

1. Make a mark onto the connecting-rod cap to prevent mixing up.
2. Unscrew the connecting rod bolts after flatten the cap washer.

Caution: position of oil dipper

3. Remove the connecting rod and cap.

Standard torque	9 - 11 Nm

d) Piston unit

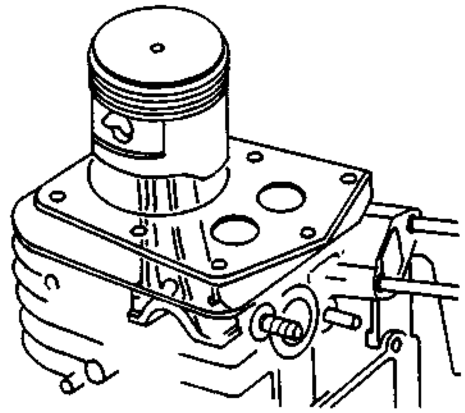

Removal:

Push the piston assembly upward

Reassemble:

The arrow mark must be directed toward the valves.

e) Crankshaft unit

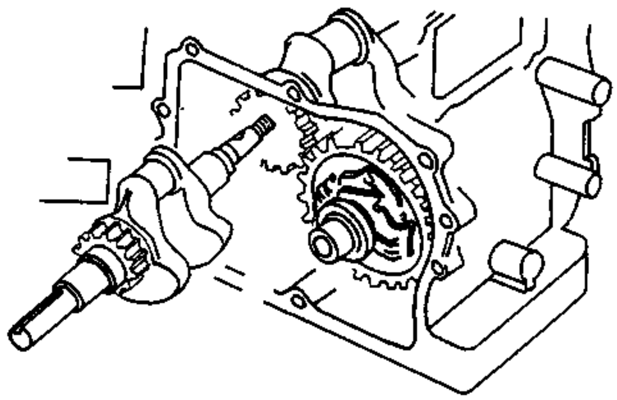

Caution: Do not drop the crankshaft.

f) Piston rings and gudgeon pin

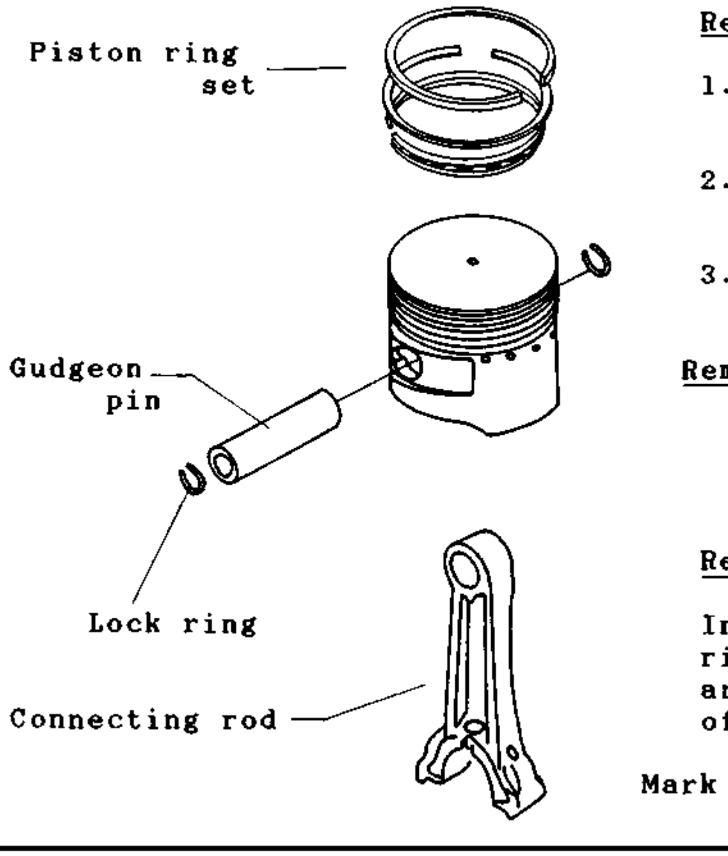

Removal:

1. Remove piston rings with a special tool.
2. Take out one of the loc ring.
3. Push out the gudgeon pin by hand or with hammer.

Remark: Remove piston rings before the gudgeon pin, otherwise, piston ring may brake

Reassembling:

Install piston Gudgeon pin rings in correct order and arrange their ends at 120 offset.

5.2.3 Inspecting the piston and piston rings

a) Measure diameter of the piston skirt

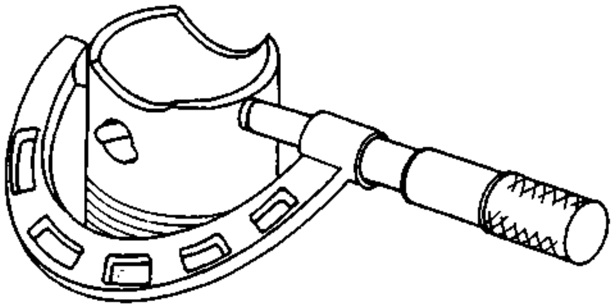

Model	Nom. size	Limited size
G150	64 mm	68.88 mm
G200	67 mm	66.88 mm

b) Measure thickness of compression rings and oil control ring

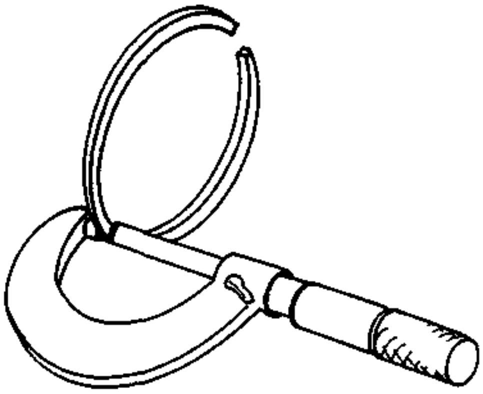

Nominal size	Limited size
Top compression ring 2 mm	1.87 mm
Second compr. ring 2mm	1.87 mm
Oil control ring 2mm	2.87 mm

c) Measure side clearance of piston ring

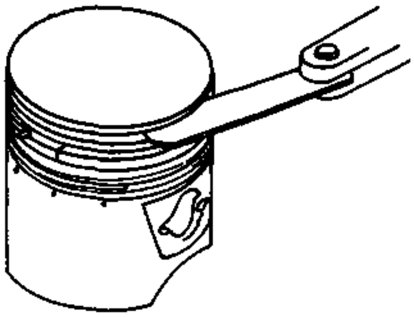

All piston rings must be installed correctly before measuring.

Nominal size	Limited size
all rings 0.01-0.05 mm	0.15 mm

d) Check piston ring end gaps with feeler gauge

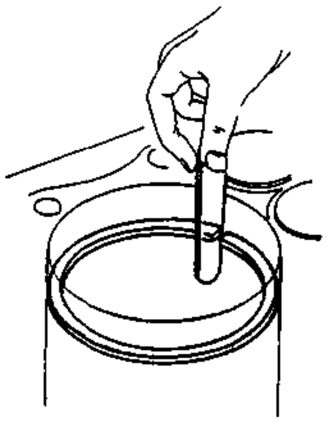

Insert all piston rings into the cylinder before measuring.

Nominal size	Limited size
all rings 0.2-0.4 mm	1 mm

5.2.4 Checking gudgeon pin and gudgeon-pin hole

a) Check gudgeon-pin hole

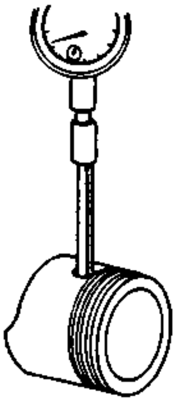

Inside micrometer

Nominal size	Limited size
15 mm	15.04 mm

b) Measure diameter of the gudgeon pin

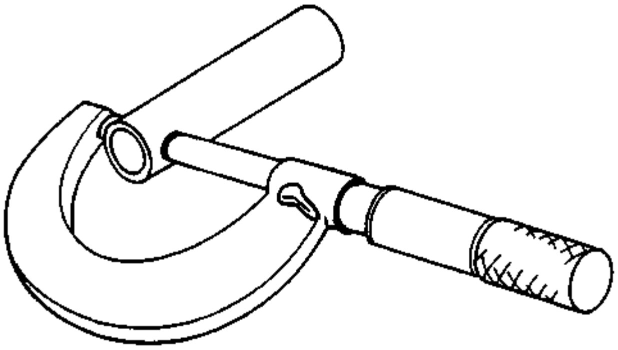

Nominal size	Limited size
15 mm	14.954 mm

c) Measure bore of the small-end connecting rod

Inside micrometer

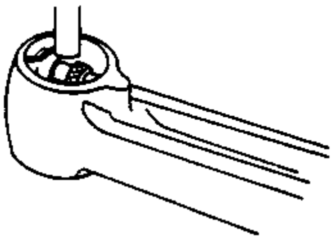

Nominal size	Limited size
15 mm	15.07 mm

5.2.5 Checking crankshaft and crankshaft bearings

a) Measure diameter of crankpin journal

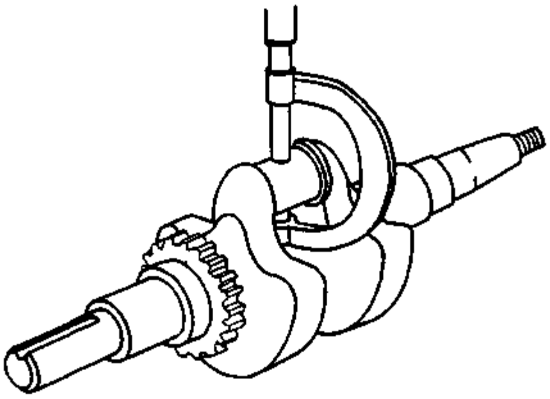

Nominal size	Limited size
26 mm	25.917 mm

b) Inspect surface conditions of both, crankshaft and seals with eyes.

c) Inspect condition of the big-end bearing shells with eyes for any sign of wear.

d) Measure connecting rod side clearence with feeler gauge.

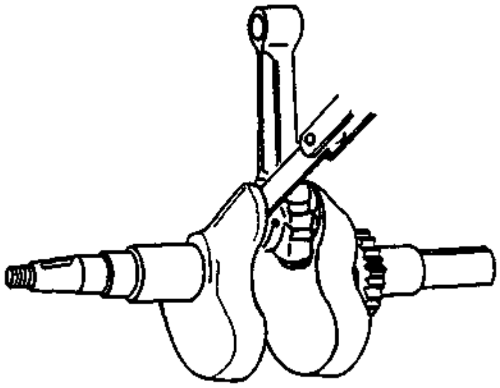

Nominal size	Limited size
0.1-0.8 mm	1.2 mm

Remark: Any parts of beyond the limited size it must be replaced.

5.2.6 Checking the cylinder

Measure diameter of cylinder with inside micrometer.

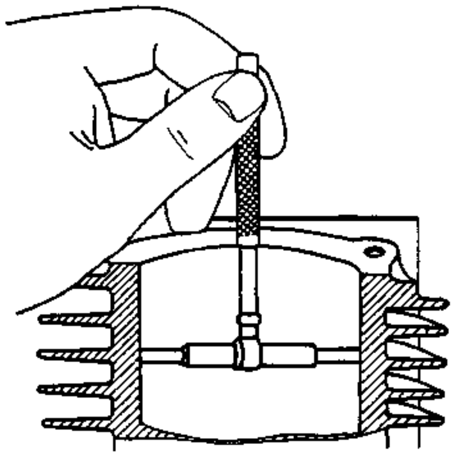

Nominal size		Limited size
G150	64.0 mm	64.165 mm
G200	67.0 mm	67.165 mm

Remark: Measuring should be carried out in several locations

6. Lubrication system

6.1 Tasks of the lubrication system

Lubrication system will supply oil to various moving parts of an engine, in order to ...

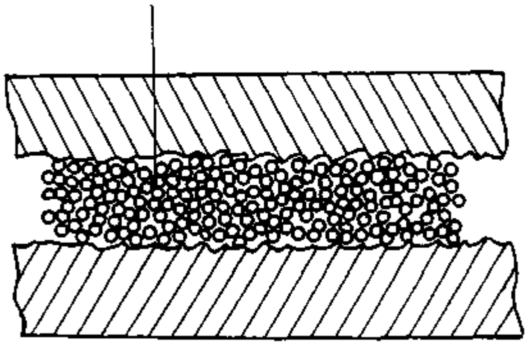

- reduce friction between moving parts,
- dissipate heat from various parts,
- absorb shock load between shaft and bush bearing,
- act like a sealing between piston rings and cylinder,
- act as cleaning agent.

6.2 Splash-type lubrication

This type of lubrication is mostly used in small engines, due to its simple construction and the simplest lubricating method.

6.2.1 Components and their function

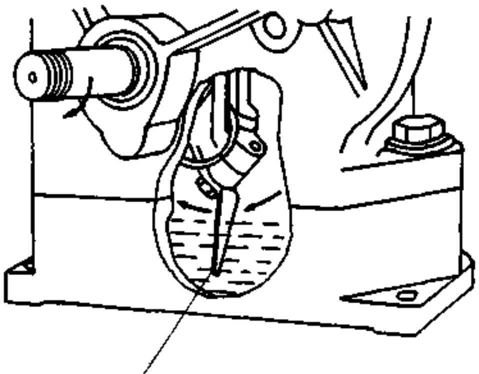

- Oil dipper will splash oil from the sump during the downward rotation of the crankshaft, to the cylinder wall and other parts.

Advantage:

- Small number of parts and simple construction

Disadvantage:

- Insufficient lubrication may occur to various part in case there is inadequate amount of oil in the sump.

Complete the statements!

1. Lubrication means ....

2. The tasks of the lubrication systems are:

   1. ....

   2. ....

   3. ....

   4. ....

   5. ....

3. Parts of small engine which need lubrication are ....

   ....

4. Most used lubrication system in small engines is the ..... type,

   because ....

5. Disadvantage of the lubrication system used in small engines;

   ....

   ....

Complete the statements!

1. Lubrication means Supply oil to the moving parts of the engine.

2. The tasks of the lubrication systems are:
   1. reduce friction between moving parts
   2. dissipate heat from various parts
   3. absorb shock load between shaft and bush bearing
   4. act like a sealing between pistonrings and cylinder
   5. act as cleaning agent

3. Parts of small engine which need lubrication are crankshaft mechanism, valve mechanism and cylinder

4. Most used lubrication system in small engines is the splash type, because due simple construction.

5. Disadvantage of the lubrication system used in small engines:

   Insufficient lubrication when there is inadequate amount of oil in the sump.

6.3 Repair and maintenance

Inspecting/changing oil:

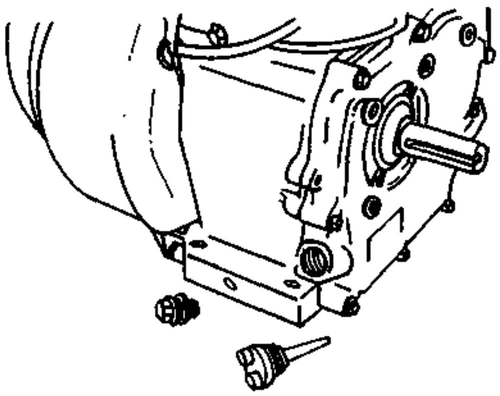

- Unscrew both the drain plug and oil refil screw plug to drain out old oil.
- Screw in the drain plug and refil with new oil upto the specified level.

Capacity of oil sump 0.7 litre

Recommended oil: SAE 2100 W-30

- The engine must be in horizontal position when checking oil level.
- Close the screw plug tightly with the aid of screw driver.

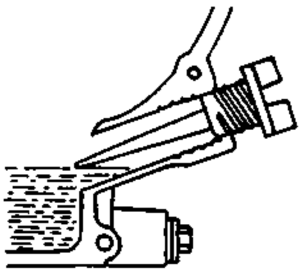

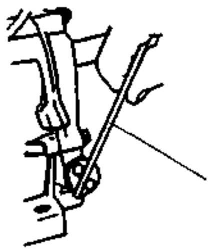

Tools: A set of wrenches

Equipement: Equipement tray, Cloth, Oil, Oil pan

Manufacturer .... Model ....

Oil grade ....

Capacity .... litre

Sequence of operation	Inspection
1. Prepare tools and equipment.	
2. Run the engine for 5 minutes.	
3. Stop the engine and drain oil.	- Condition of oil ....
4. Refil new oil upto the specified level.	- Capacity of oil .... litre - Grade ....
5. Start the engine and observe for oil leakage.	☐ Leakage ☐ No leakage
6. Stop the engine and recheck oil level.	- Oil level ☐ Correct ☐ Incorrect
7. Clean and store tools and equipment.	- Tools ☐ Complete ☐ Incomplete

Note : ....

....

....

....

7. Cooling system

Air cooling system....

is the most used system in small engines because it is easy to place, light in weight, has asmall number of parts and low production costs.
Its tasks are:

- to dissipate heat as generated by friction
- to control dissipating heat within certain range of working teperature for efficient engine performance

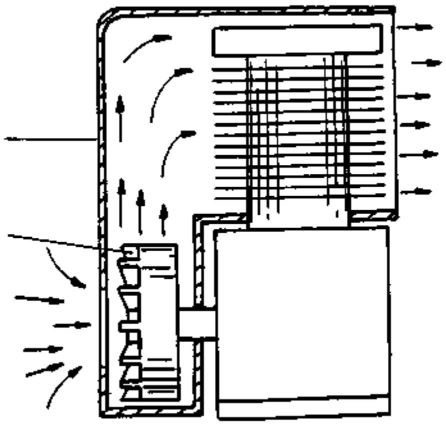

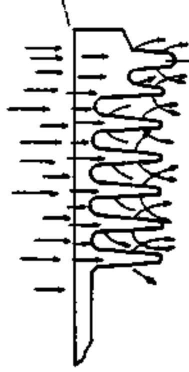

- The system uses air as a cooling medium to transfer heat from engine to surrounding air which has lower temperature.
- For engine with air cooling system, the exterior of cylinder will be in forms of fins and spaces which increases area of air contact.
- To be of efficient the blower cover is used to direct air blowing.
- As the engine runs, the blower blade attached on the flywheel will suck in cool air and blow it along the cover to cool down the cylinder wall.

Complete the statements!

1. The tasks of the cooling system are:

   1. ....

   2. ....

2. Small gasoline engines generally use .... cooling system, because ....

3. Small gasoline engines generally have their cylinder head and cylinder block made in the forms of .... This is for ....

4. Components of cooling system of most small gasoline engines consist of ....

5. Blower cover is used for ....

Complete the statements!

1. The tasks of the cooling system are:
   1. To dissipate heat as generated by friction.......
   2. To control temperature within a certain range...

2. Small gasoline engines generally use .air.... cooling system, because it is easy to place, light in weight, has a small number of parts and low production costs.

3. Small gasoline engines generally have their cylinder head and cylinder block made in the forms of ..fins and spaces..... This is for increasing the area of air contact.....

4. Components of cooling system of most small gasoline engines consist of . lover,. lower-cover and fins..............

5. Blower cover is used ~~for~~ to guide the air...............

7.1 Repair and maintenance

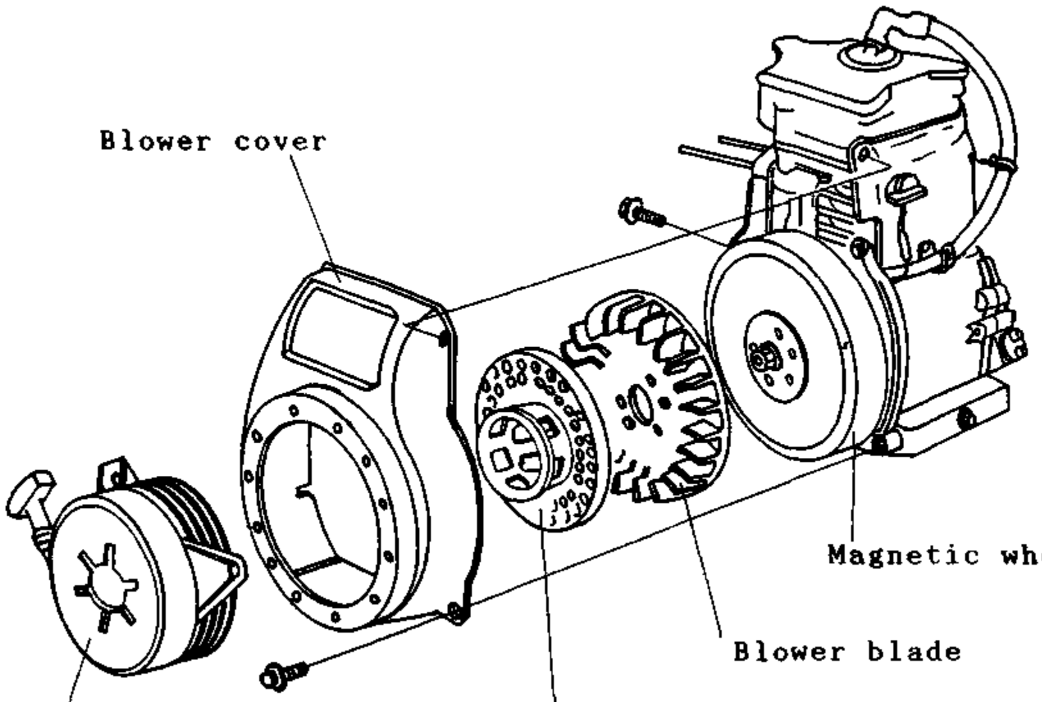

- The starting unit must be cleaned before assembling the blower cover.

- The blower blade must be fixed to the magnetic wheel at the correct position which is guided by the pilot pin of the magnetic wheel. Be aware of cracking the blower blade.

Tools: A set of wrenches

Equipement: Tray, cloth, benzene

Manufacturer.......................... Model ....

Type of cooling system ....

Sequence of operations	Inspection
1. Prepare tools and equipment.	
2. Close fuel valve, disconnect fuel hose and remove fuel tank.	
3. Remove starting unit. Remark: Notice the position of starting unit.	
4. Remove blower cover.	- Condition of blower cover ☐ Normal ☐ Damaged
5. Remove starting pulley. Remark: Notice the position of starting pulley.	
6. Remove blower blade.	- Condition of blower blade ☐ Normal ☐ Damaged
7. Clean blower blade, fins of cylinder head and cylinder block, and blowe cover.	
8. Reassemble those components	
9. Clean and store tools and equipment.	- Tools-equipment ☐ Complete ☐ Incomplete

Note : ....

....

....

8. Starting system

8.1 Types of starting systems

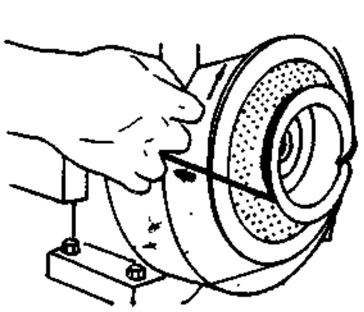

Conventional type

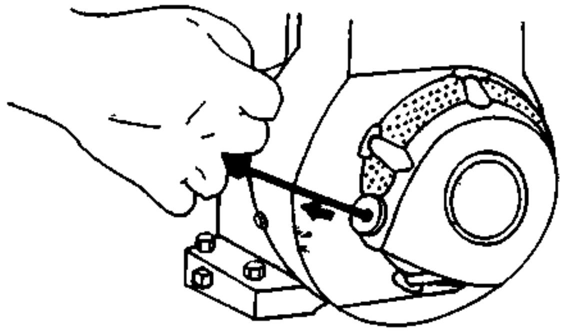

Built in starting unit

8.2 Repair and maintenance

a) Removal and reassemble starting unit

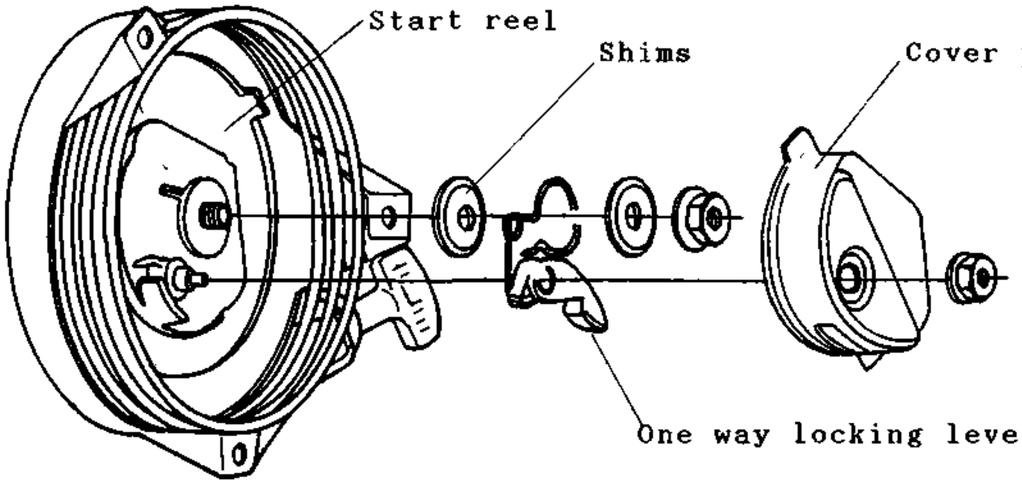

b) Assembling starting string

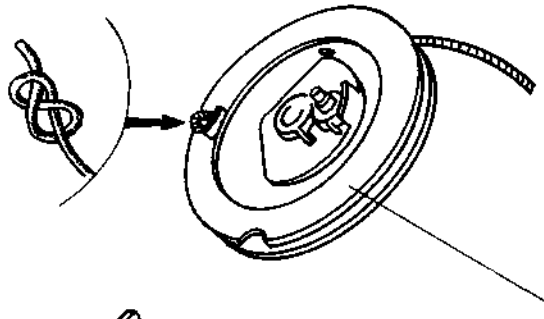

- Thread one end of the string through the hole of the start reel and make a knot.

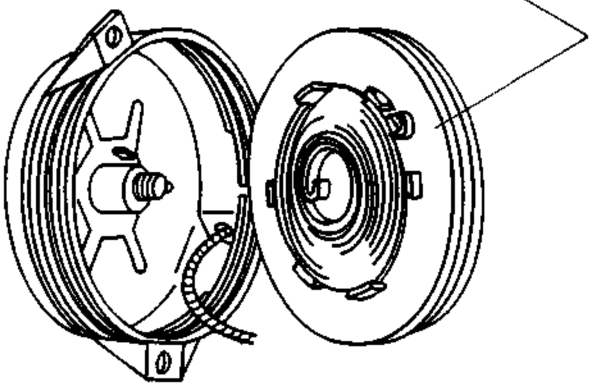

- Wind the string on the start reel (in the direction of spring). Thread the other end of string through the spring housing. Refit the start reel to the spring housing.

Starting spring housing

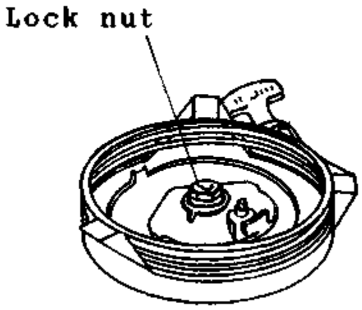

- Reassemble the spring plate and screw on the lack nut. Tighten it to the specified torque.

Spring plate

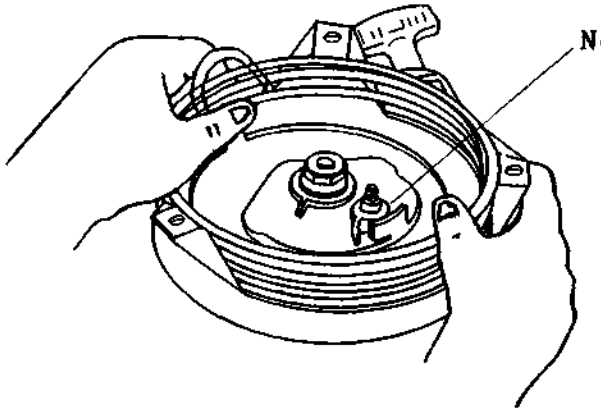

- Turn the start reel for about 1 1/2 turns to wind up the rest of string from the notch of the start reel.

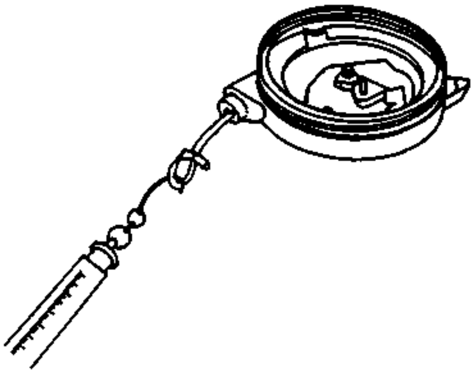

- Check tensioning of the starting string by using a spring scale. The reading should be about 0.6–1.4 kg. Adjustment of tension can be accomplished by tightening or loosening the start reel.

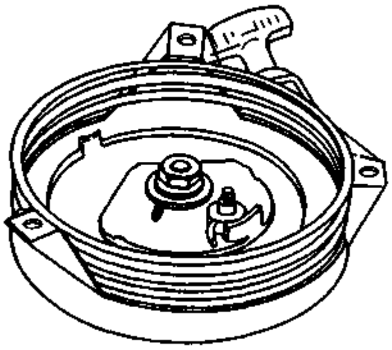

- Refit the handle to the starting string and tie it. Assemble the spring to the ratchet of the start reel. Inspect function of the ratchet.

- Reinstall the start reel cover.

Tools: A set of wrenches

Equipement: Tray, cloth, grease

Manufacturer .... Model ....

Type of starting system ....

Sequence of operations	Inspection
1. Prepare tools and equipment.	
2. Remove starting unit from blower cover.	
3. Dismantle components of starting unit.	- check/repalce parts
4. Clean all parts of the starting unit.	- grease moving parts
5. Reassemble components of the starting unit.	
6. Refit the starting unit	- check performance
7. Inspect its function	
8. Clean and store tools and equipment.	

Note : ....

....

....

....

9. Exhaust system

9.1 Purposes of exhaust system

a) To relief exhaust gas from the combustion chamber.

b) To improve engine power.

c) To reduce expanding noise of exhaust gas.

9.2 Components and their function

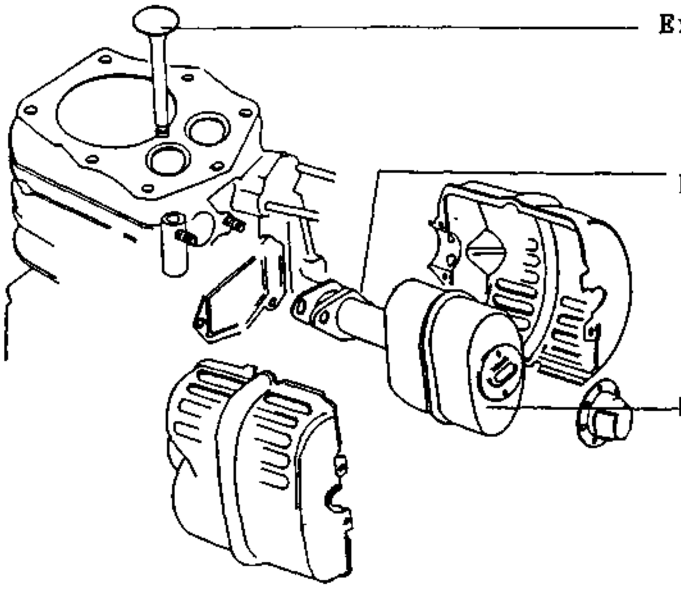

Exhaust valve:
Controles the flow of exhaust gas according to the strokes of the engine.

Exhaust manifold:
Acts as passage for the exhaust gas.

Muffler:
- Reduces noise of the exhaust gas.
- Smoothes the flow of exhaust gas.

There are two kinds of mufflers:

a) Straight-through muffler

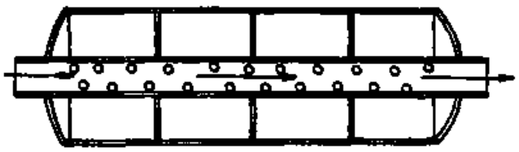

The exhaust gas flows like a stream both inside and outside the muffler, causing turbulence.

Hard flow of exhaust gas will reduce engine power.

b) Reverse-flow muffler

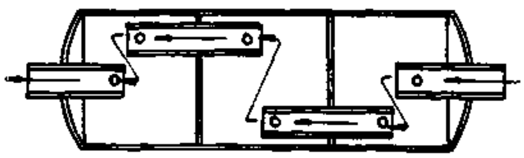

The exhaust gas will expand inside each compartment of the muffler as it flows. This wil minimize the level of noise considerably when it comes out to the atmosphere.

Turbulence of exhaust gas is reduced, thus, noise is also reduced.

Complete the statements!

1. Purposes of exhaust system are :

   a) ....

   b) ....

   c) ....

2. Name various parts of the exhaust system.

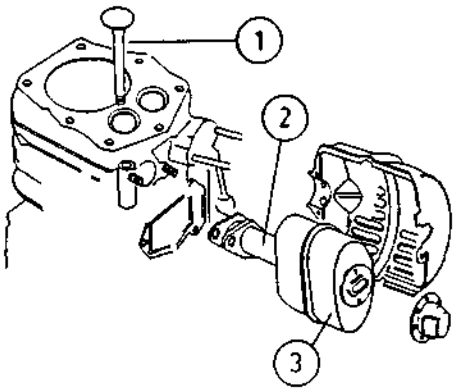

1. ....
2. ....
3. ....

3. The muflfer can reduce noise of exhaust gas, due to ....

   ....

4. There are .... muffler-designs, which are ....

   ....

5. Small gasoline engines generally use the ....muffler-type

   because ....

Complete the statements!

1. Purposes of exhaust system are :
   a) To relief exhaust gas from the combustion chambre
   b) To improove engine power
   c) To reduce expanding noise of exhaust gas

2. Name various parts of the exhaust system.

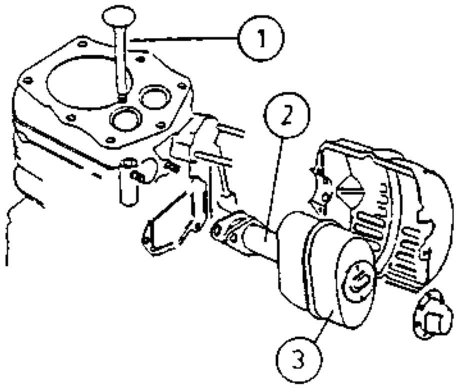

1. Exhaust valve
2. Exhaust manifold
3. Muffler

3. The muflfer can reduce noise of exhaust gas, due to turbulence and expansion

4. There are 2 muffler-designs, which are Straight-through and Reverse-flow muffler.

5. Small gasoline engines generally use the Reverse muffler-type, because noise is reduced and engine power improoved.

SOURCE BOOK

FOR TEACHING, LEARNING AND ENJOYING PHYSICS

SOURCE BOOK

IDEAS FOR TEACHING PHYSICS TO BEGINNERS

WITH LOCALLY AVAILABLE MATERIALS

IDEAS FOR TEACHING, LEARNING AND ASSESSMENT BY DOING

MZUMBE BOOK PROJECT
P.O. Box 19 MZUMBE,
MOROGORO • TANZANIA

This source book is the result of a workshop held at Morogoro Secondary School (Tanzania) from July 15th to 26th 1991. The workshop was organised by the Ministry of Education and Culture in cooperation with the Goethe-Institüt (German Cultural Institute).

Workshop Administrative Coordinator:

Ignatius Sarikoki, Ministry of Education and Culture, Tanzania

Workshop Technical Coordinator:

Hans Schmidt, Darmstadt, Germany

Editing Coordinators:

J.B.A. Mihigo, Mzumbe Book/Project
Manfred Schiess, Rastatt, Germany

This workshop project was sponsored by:

- Ministry of Education and Culture, Tanzania
- Ministry of Education and Culture, Hessen, Germany
- Goethe-Institüt, Dar es Salaam

This low-priced edition for Tanzania is sponsored by:

- Canadian Organization For Development Through Education (CODE)
- Partnership Furtherance With the Third World (APDW), Karlsruhe, Germany

Editorial committee:

J.M. Waryoba, A.S. Mrutu, B.W. Faustine, M.J. Mbuji,
J.M. Sekulu, J.B.A. Mihigo, G. Emmanuel, B. Enjiku,
I. Tabaro, D. Pietz, M. Schiess

The editors thank Dr. W. Kemp, C. and G. Stieghorst for their valuable comments and help in proof-reading.

Special Technical assistance was sponsored by:

- German Didacta Association, Frankfurt, Germany (Deutscher Didacta Verband, e.V.)
- Merck Ltd., Darmstadt, Germany.

Type set by B.B. Sallim, Mrs. A. Mihigo

Graphic design by R. Kanyawana, C. Mdachi, P. Ndunguru

Darkroom technique: M. E. Mwano, Miss. E. Mwombeki

Production Supervisor: C. Mazunda

ISBN 9987 552 11 0

Printed and Bound by

Mzumbe Book Project
P.O. Box 19 Mzumbe
Morogoro - Tanzania

List of Participants:

Alinanuswe W.P. Mwakabanje
Loleza Secondary School

Daudi Mbungu
Tambaza Secondary School

Busanji Wilson Faustine
Kilakala Secondary School

Charles Philemon
Jangwani Secondary School

T.J. Msami
Weruweru Secondary School

M.J. Mbuji
Minaki Secondary School

U.S. Mohamed
Usagara Secondary School

J.D.K. Bulemo
Azania Secondary School

Pastory B. Rwamwasi
Pugu Secondary School

Bonus P. Ndimbo
Songea Boys Secondary School

Raphael R. Malisa
Old Moshi Secondary School

H. Mgonja
Same Secondary School

Samwel N.J. Mwakasonda
Tabora Boys Secondary School

Mrs M. Muyenge
Mzumbe Secondary School

George Emmanuel
Morogoro Secondary School

Detlef Pietz
Iyego Secondary School, Murang'a, Kenya

Jones M. Waryoba
Institute of Curriculum Development, Tanzania

J.M. Sekulu
Kleruu Teachers Training College

Dr. Manfred Spohr
Dar es Salaam Teachers Training College

A.S. Mrutu
Ministry of Education

D.D. Ben Enjiku
Institute of Teacher Education - Uganda

Ignatius Tabaro-Sinaruhamagaye
National Curriculum Development Centre - Uganda

Foreword

Children come to school with rich knowledge about their environment. They gained this knowledge through observation and imitation. For example, they know how to construct toy cars by perfectly applying the physical laws. They also know how to carry a heavy load on the head and how to lift a heavy stone. They can do all this without studying Physics. Through such learning by doing they absorb easily the knowledge needed to solve everyday problems.

Science and Physics for that matter is borne in the nature around us. Scientists observe, explain and formulate the results into abstract laws for further investigation of other problems. We are all born with the ability to be investigators, however, we have to learn how to do it. This learning should start with phenomena the child is familiar with and not with abstract definitions what science is.

The rich practical knowledge of the students can be used as a springboard for teaching science not only to beginners by getting the pupils to have a critical look at and ask analytical questions about their environment. This requires a practical approach in teaching. By this approach students learn to be investigators by finding the applied principles in the things around them. Students should learn to see the daily environment with the eyes of an analytical scientist. This makes them also aware of the resources to be found in their country.

Physics as a natural science deals with the investigation of matter. However, the investigation of matter can be done by using a practical approach only.

Children are eager to talk or ask questions about things they are familiar with rather than about abstract theoretical knowledge taken from books.

Furthermore, the teaching of science with locally available materials makes learning by doing accessible, even when conditions for teaching are not conducive.

This is the message of this book. It shows that the most common materials are often sufficient for stimulating experimental lessons. Experimenting is a difficult job for a less experienced teacher. However it can also be fun for him. Most of the experiments described in this book can be performed in a very short time and without long sessions of preparation.

The described experiments are not only for school purposes, but also for other people interested in this subject.

It is my sincere hope that this book will contribute to the building up of a broad line of people in our country who are interested in learning more about Physics.

LET US ENJOY PHYSICS BY DOING
L.K. MSAKI
Acting Commissioner for Education

Preface

This source book is addressed to people who are concerned with teaching Science at the Junior Secondary School level. This includes Teachers, Teacher Training College Tutors and University Lecturers. Nevertheless, the book can be useful to Science Club Masters and Students who want to experiment on their own. The main audience are the teachers and tutors who work in inadequate teaching and learning conditions trying to encourage students to develop capabilities to master and use science in their daily life.

This source book contains therefore experiments and activities which can be performed in any classroom and in a very short time with a few low or even no cost materials. Moreover, these practicals do not require a long preparation time.

Such easy to carry out experiments for and through beginners have a long standing tradition in the history of teaching science. They are called *handy experiments* because they can be performed "by hands" only without any difficulties.

You will find in this source book ideas and suggestions which are not normally found in textbooks. We assume that the teachers know most of the traditional experiments which are found in the usual textbooks. Therefore there is no need to repeat them here. The reader will welcome the ideas on how to modernize his teaching since this book provides him not only with the "how to do it" but also with the "what to do" information.

Going through this book, the reader will find that many traditional experiments can be performed as handy experiments too. They are more illustrative and more appealing to students than "black box experiments" with sophisticated equipment. They encourage the students' creativity to invent other experiments and stimulate their natural curiosity to understand the physics behind the experiments.

The suggestions of this source book are stimulants to modern teaching and learning, i.e. *teaching and learning by doing.* They should be supplemented with the teachers' own ideas, students' ideas and ideas from other sources. This source book is a result of a workshop which drew participants from Uganda, Kenya, Germany and Tanzania.

We acknowledge with gratitude the professional, technical and financial assistance of all who have contributed to publish this source book particularly to the Ministry of Culture of the State of Hessen (Germany) and the Goethe-Institute for sponsoring the workshop.

Last but not least, we thank Morogoro Secondary School for hosting the workshop from which the source book resulted.

A.S. NDEKI
Chairman of the Executive Committee
Mzumbe Book Project

Contents

How to Use This Book

This source book may be used in connection with the series of textbooks called "Enjoy Physics", volume I and II, produced by the same publishers, the MZUMBE BOOK PROJECT. These books have been written with great emphasis on the use of materials which can easily be obtained from our environment. However, this source book may be also used without these textbooks.

Many students think that Physics is a very tough subject and they actually fear it. If you as a Physics teacher use the approach suggested in this source book, you can be quite sure that your students will lose their fear. They will become interested and creative in Physics. They will like and even enjoy your Physics lessons. This way they will be able to develop those talents which are needed for real development to take place.

Being a Physics teacher, this book will help you to master the simple techniques described in order to be able to make simple apparatus, models and other teaching aids. After this you may want to transfer the skills to your pupils so that they may help you in making the required items.

The experiments described in this book are simple and can be carried out even in the absence of a Physics laboratory. The Physics kit described in the appendix is meant to be self-contained. However, first you may select only a few experiments from each section. Therefore, we have listed the materials needed for each single experiment in the appendix. Of course, each kit needs all the *materials* listed on p.111 and these were omitted in the list of materials of the various experiments (see p.112).

Perhaps your students might become interested to prepare the materials for further experiments described in this source book. Thus, after some time you might be able to carry out most of the experiments suggested.

For heating purposes an improved, sootless kerosene burner has been developed which any "fundi", who makes normal "vibatari", is able to produce, see p. 109.

Being a Student, this book may also help you in the designing and carrying out of physics projects. If you produce your own Physics kit, this will provide you with a kind of minilab at home.

Using it, you can train yourself on the practical and investigating aspects of Physics. Therefore, you will enjoy Physics and develop your talents in this subject. This way, Physics may contribute to self-substained development by improving the daily life of the people.

An experiment has several important phases which we have usually outlined in this source book. The symbols are as follows:

P: The *procedure:* what and how to perform the experiment and/or how to build the apparatus.

Q: *Questions* which the investigator may ask himself or a teacher may ask his students in order to guide them to the proper observations and explanations.

At this stage the dedicated investigator or student should stop reading and try to answer the questions himself after carrying out the experiment. If he/she has the self-discipline needed to do this, he/she will certainly gain a lot.

O: The *observations* are described here. So you may check *after* you have made your own observations if you did not miss an important point.

E: The *explanation* of the observations is outlined here. Physics always aims for explaining observations. Only if he can explain his observation, the scientist usually will be able to predict the outcome of other experiments. This leads to the knowledge of the laws of physics. Then he/she may also become creative enough to apply a certain physical law in a machine or an apparatus which he/she invents. This way development takes place.

A: Some *applications* of the phenomenon under investigation in the respective experiment may be given here. Thus, the interested student will easily recognise and appreciate the close relationship between Physics and Technology. The latter cannot exist without the former.

We warmly welcome your criticism, suggestions and opinions about this book. Please, fill in the questionnaire at the end of this volume and send it to us. Please write to us to improve future editions of this book:

Team of the source book and "Enjoy Physics"

Mzumbe Book Project
P.O. Box 19,
Mzumbe - Morogoro
Tanzania.

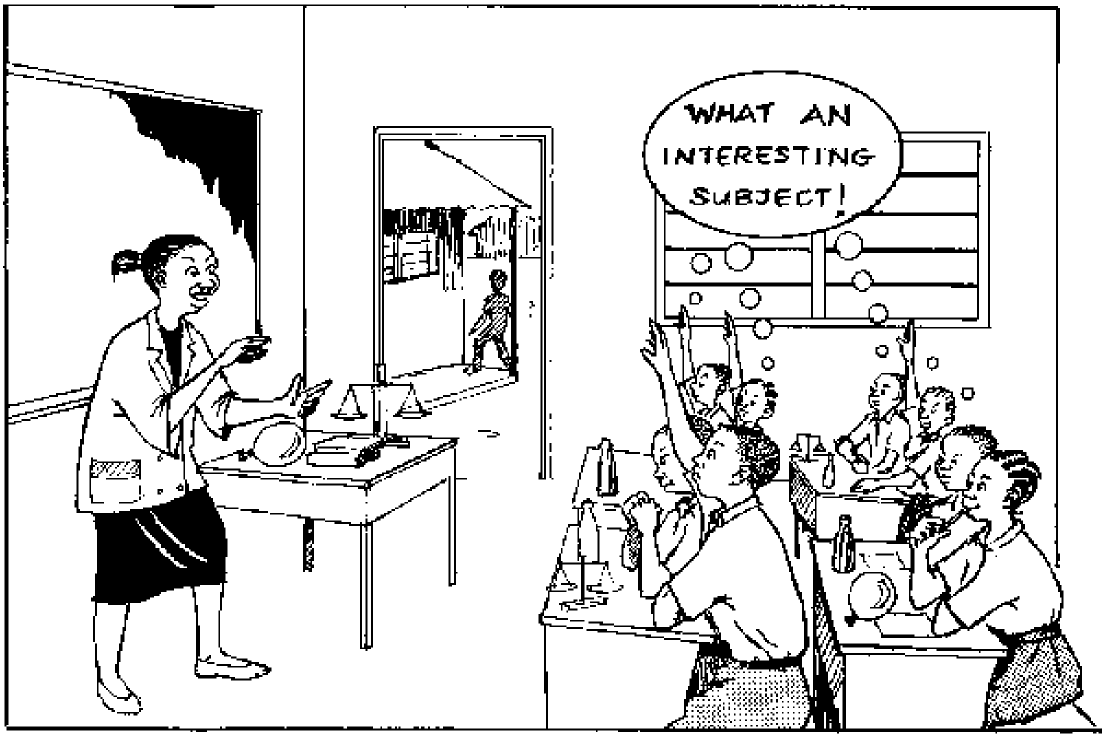

1. What is Physics?

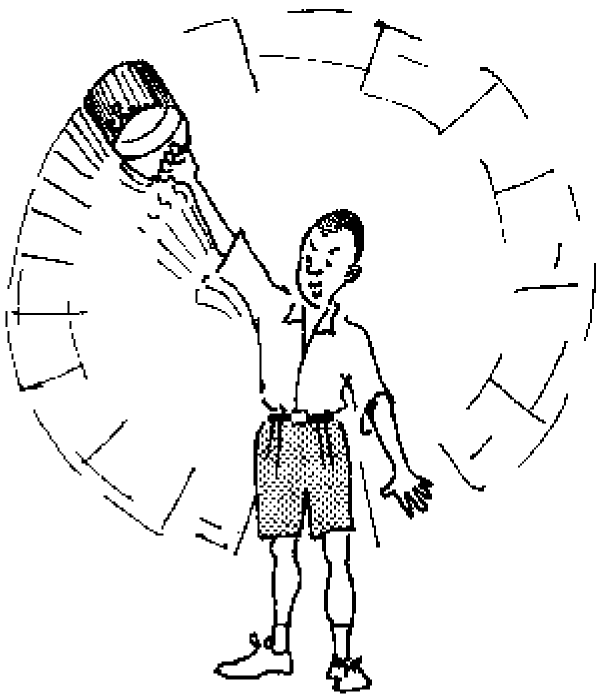

1.1 What is Physics?

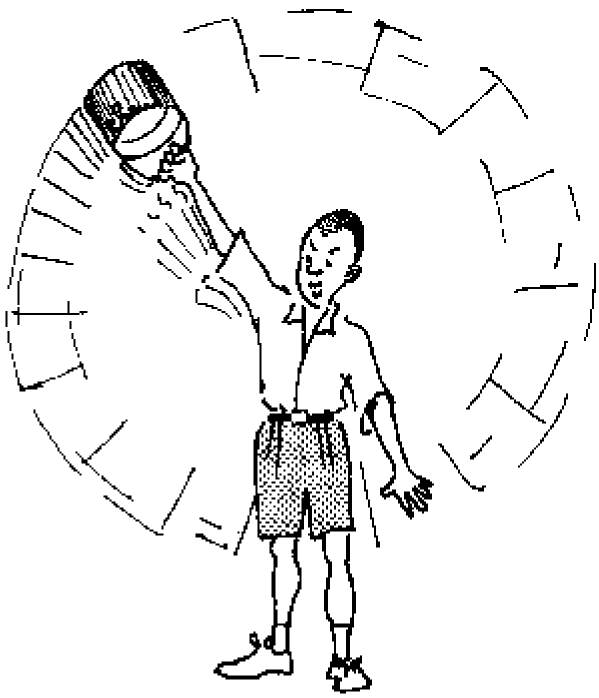

A bucket of water is sufficient to start investigating the effect of centripetal forces. Fill the bucket with various quantities of water and you will learn even more by doing. Increase the number of revolutions of the bucket.

Physics must not be a boring, tough subject, just good for exams and to be understood by a few "experts" (nly. Physics should not happen in books only. It is everywhere where things are. The teaching of science without experiments is just like a ngoma without dancers.

Pupils learn more and better by doing. Stimulate them to investigate their environment through easy to carry out experiments. Ask the pupils to make a list of physical phenomena which can be observed in their environment. Let the pupils enjoy physics. This sourcebook shows how this can be achieved.

1.2 Laboratory Techniques

Imagine you would buy different kinds and different quantities of meat. The butcher will have to weigh and then calculate the price for each kind of meat and produce the total bill. Thus, measuring and the collection of data happen nearly everyday in our life.

The tailor takes the measurements of his customer and of the material needed for a suit. The milkman measures the volume of the milk sold. The technician measures with a calliper the diameter of a screw and even at school the time of each period is measured. Especially in engineering precise measurements are indispensable.

Therefore physics as a subject has to introduce even beginners to the principles of measuring and data collection. "I have no measuring instruments in my school," you may say. Really? Let the students enjoy physics starting with measurements which are easy to carry out and the construction of measuring instruments. For a lot of hints see chapter 2.

1.3 Basic Mechanics

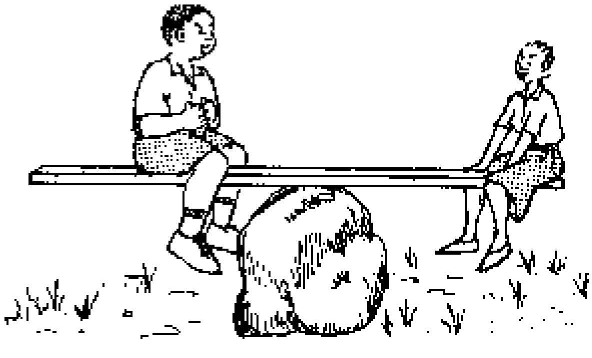

Have you observed children balancing a plank like a seesaw? They know how a big and a small child can balance although they are of different weight.

Usually they do not know what a fulcrum, a load distance and a moment of force is. However, such basic mechanics dominate an essential part of our daily life. We encounter motion, friction, inertia, work and power almost every day. We also learn in a practical way about density, pressure of fluids or gases. Work, energy, power and other physical phenomena look very abstract in books but happen every day. Also the movement of earth, moon and the planets which determines the lengths of our days, months and years, has to do with basic mechanics such as motion, mass attraction and centripetal forces.

Ask the students to discuss where such basic mechanics phenomena can be observed. Discussing only? No! There are plenty of meaningful experiments. For these, see chapter 3.

1.4 Matter

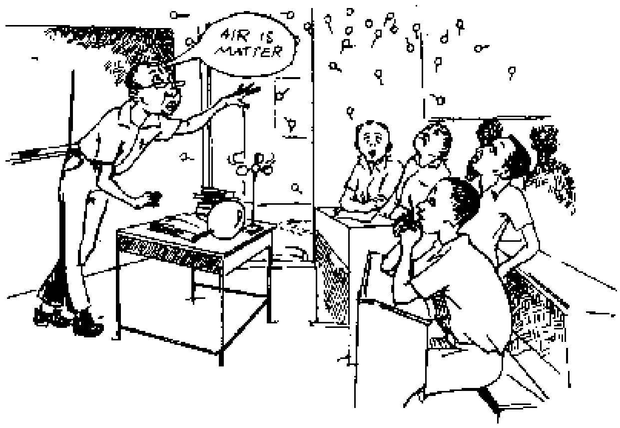

A chair can be touched. Water in a bucket also. But air? Can you imagine that while you are reading these lines your nose is punched more than 100 billion times by air molecules?

The environment around us, whether in solid, liquid or gaseous state is made up of billions of tiny particles which are either molecules or atoms. These particles which constitute air are so tiny, that we cannot see them even by a powerful microscope. However, the students can be given an idea of the particle structure of matter by indirect evidence.

Discuss with the students from which evidence we can conclude the existence of particles and ask them to write an essay about this. You may think, there are no experiments possible about states of matter, diffusion, molecular forces and other properties of matter? Failed! For details see chapter 4.

1.5 Thermal Physics

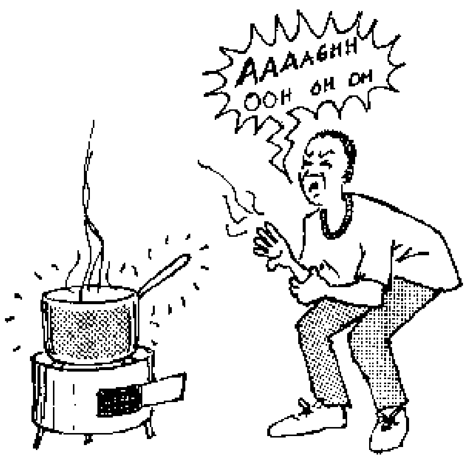

Would you ever touch the handle of a hot pan? Not me. Would you put margarine just aside of the pot? Not me. Would you hold your hand right above the hot water? Not me. This is because, we know a lot about thermal physics by daily experience. But we do not always relate this knowledge with what we learn at school about heat conduction, heat radiation or heat convection as is the case in the examples mentioned above.

Thermal physics has also to do with thermal energy and the measurement of temperatures, with calorimetry, change of states, expansion, etc. Ask the students to talk about everyday thermal phenomena and to write about these. Why should we teach this topic by talk and chalk only, if there are illustrative experiments which do not require a lot of equipment and which are not time consuming in their preparation and performance? See chapter 5.

1.6 Wave Motion

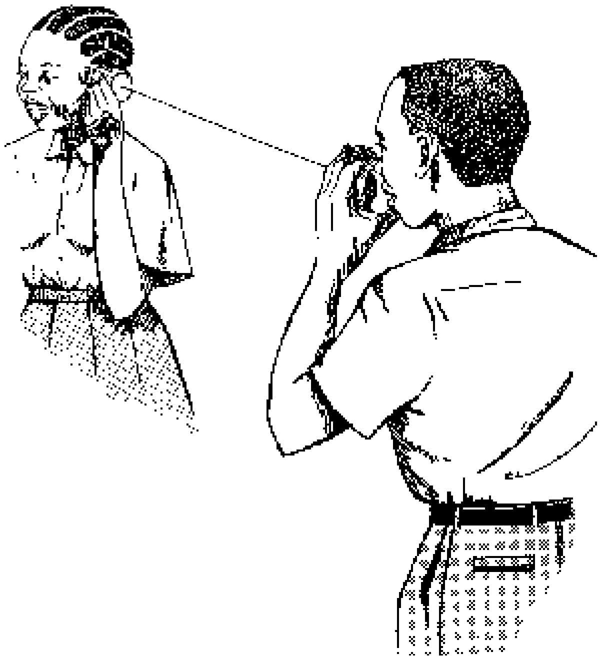

Communication through spoken words has to do with the transport of waves. Telephone and radio are well known. But do we think about waves when we hear a music band, when a craw is croaking or when children are playing with a string telephone?

However, children know how to construct a good string telephone. Two tin cans are needed, also a string which is tied with a knot in a hole at each can. The string should be stretched and not be slack. It should not be heavy. All this is everyday knowledge about the transport of sound waves.

But teaching about waves does not mean only sound waves. We already have mentioned electromagnetic waves. Water waves we notice in a water puddle as well as in a cup of tea.

Produce waves in physics not only by talking. Meaningful and simple experiments are possible on many themes of this topic. No time? Hand experiments are always brief, illustrative and can be carried out with everyday things. Get ideas by reading chapter 6.

1.7 Geometrical Optics

When we hear about optics, the optician, eye glasses and lenses come into our mind. But that is not all what optics is about. Optics is also about the reflection of an image in a mirror or in a water puddle. The water surface is like a mirror. The image to be seen is inverted and it seems to be as far behind the water surface as the object is in front of it. Perhaps there are no curved mirrors at your school to teach about concave and convex mirrors. No problem. Take a polished spherical spoon and you will be able to perform an interesting lesson. If you have no equipment for an introduction to the principles of how lenses work, this is no problem too. Take a fused and water filled transparent bulb and you can be sure about the admiration of your students about your creativity in teaching physics by doing. Certainly not all themes can be taught by simple qualitative hand experiments only. But you may be astonished to see how many there are for eye catching demonstrations. For details, see chapter 7.

1.8 Electricity and Magnetism

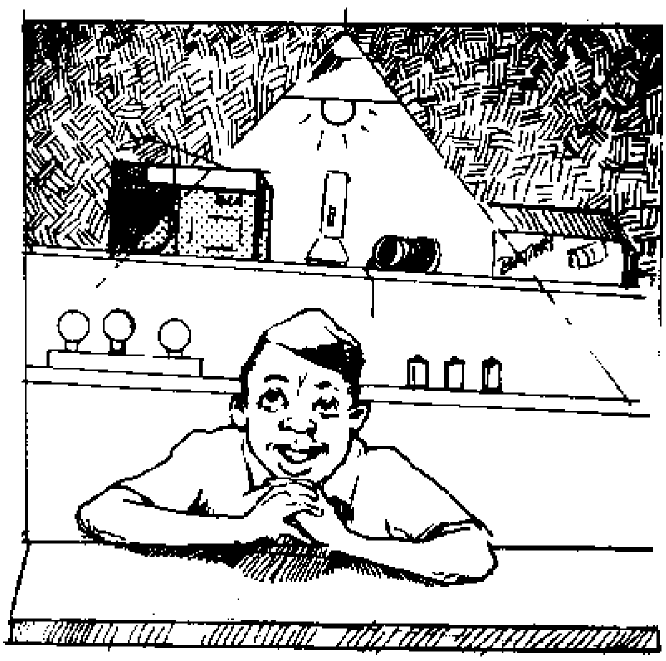

Effects of electricity can be observed nowadays nearly everywhere. A light bulb lights the room, a radio enchants our ears and a torch helps to find our way in the darkness and last but not least we do owe a cool soft drink to a refrigerator. The understanding on how electric apparatus work is essential nowadays.

But electricity does not only mean a current flows in a circuit. It means also static electricity or a lightning during a thunderstorm. The topic electricity is closely related to magnetism. Without magnets electric motors would not work. Loudspeakers work with magnets and even a simple bicycle dynamo has one. In harbours you can see how "attractive" magnets can be to lift heavy loads. Do you think that the teaching of electricity by doing is difficult, needs a lot of equipment and is even dangerous? Brief and attention attracting experiments wanted? Only look on chapter 8.

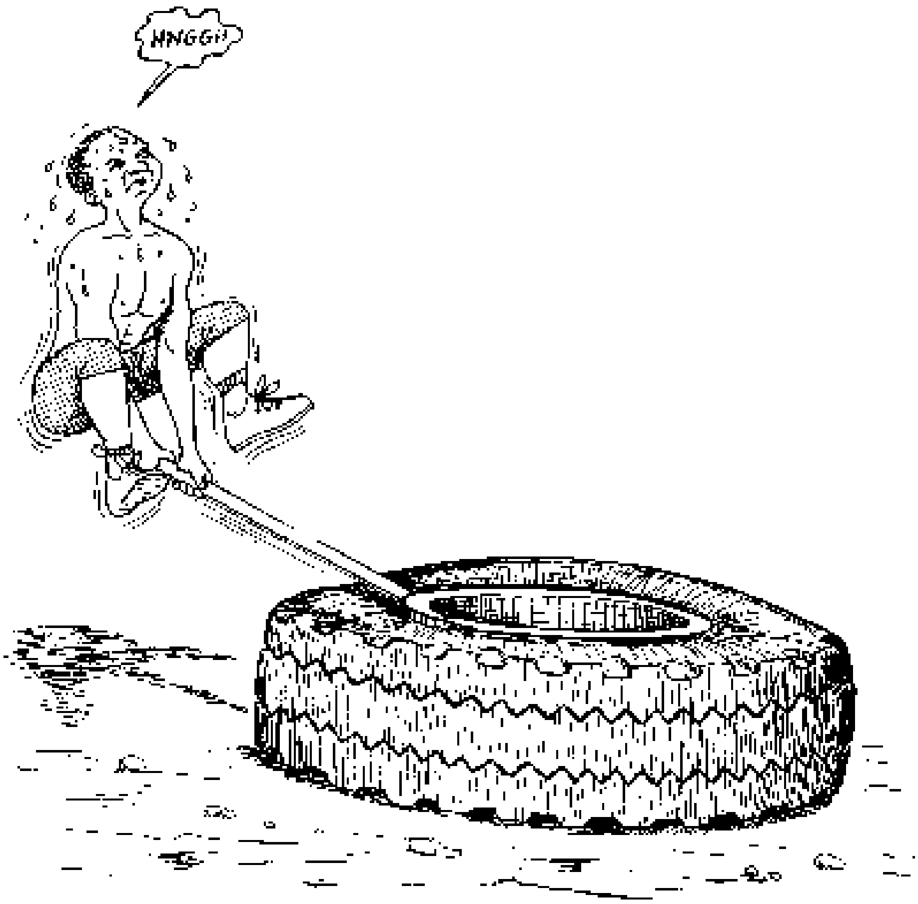

2. Laboratory Techniques

2.1 Collection of Data

Man's progress is due, in large part, to his ability to measure and hence collect data with greater and greater precision. Young pupils should learn, generally, about how to obtain data by carrying out simple experiments. They should be introduced to the basic measurements of mass, distance and time. They should be trained in recording and in graphical analysis of data.

2.1.1 Data on Weighing

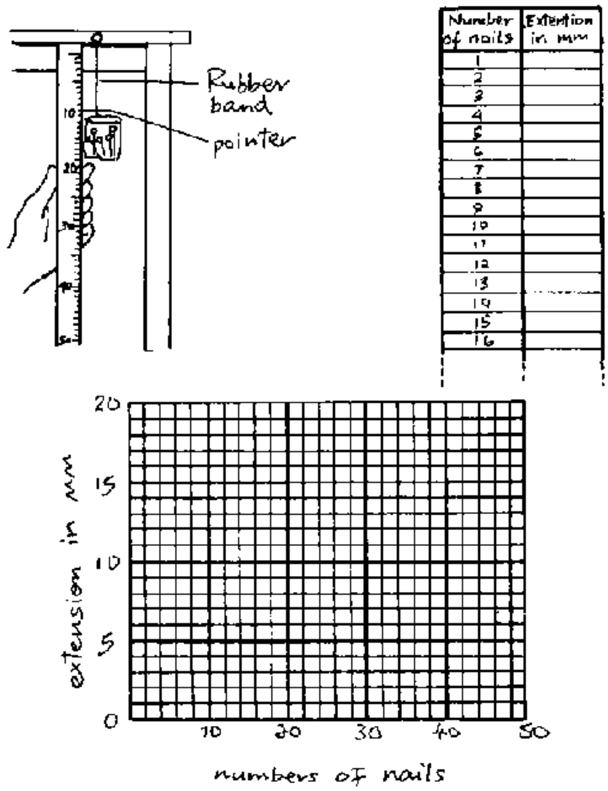

A rubber band is fixed at one end and is attached both to a wire hook at the other end (which serves as a pointer) and a small plastic bag (e.g. for wrapping groundnuts). Fill the bag with nails in succesive small numbers (which you count) or other objects of similar weights. Let the pupils measure the extension of the rubber band, each time they add more nails, record the readings and ask them to draw a graph (see the figure).

2.1.2 Data on Distance

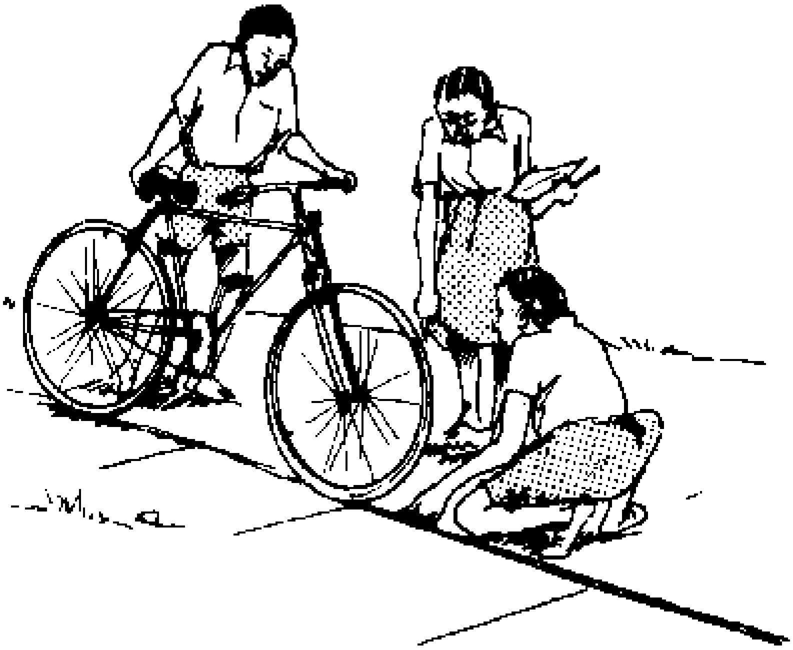

TURNS	DISTANCE

Make a mark on the tyre of a bicycle or a car at a point just next to the surface of the pavement. Turn the tyre to move straight forward along the pavement and measure and record the length of one turn. This is the distance covered when the mark is about to make contact with the pavement again. Let the pupils repeat the experiment several times in each case with the tyre allowed to roll a few more turns. The distance is calculated in each case and a graph is drawn.

2.1.3 Data on Time

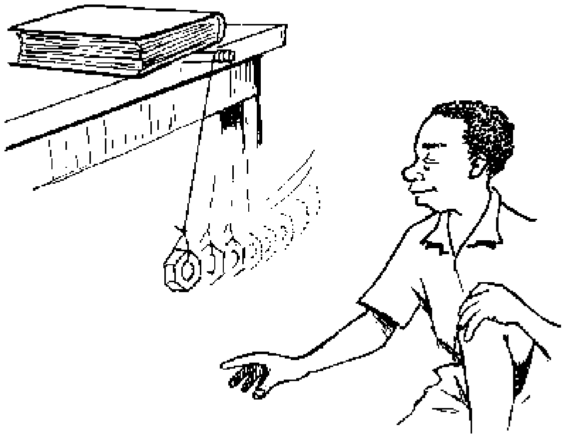

LENGTH OF PENDULUM	SWINGS		
	5 CM	10 CM	15 CM
50 cm			
75 cm			
100 CM			

Fix a thin thread somewhat off the edge of a table and hang e.g. a nut at a distance of 50 cm on it. You have made a pendulum. Hold the (nut) pendulum and pull it to one side, so that it is horizontally displaced by 5 cm. Start counting the number of oscillations (back and forth) that take place in one minute. Record your result as shown. Repeat the experiment by horizontally displacing the nut by 10 cm and 15 cm consecutively. Try to find out the length of a pendulum which happens to oscillate just 60 times in one minute.

2.1.4 Data on Velocity

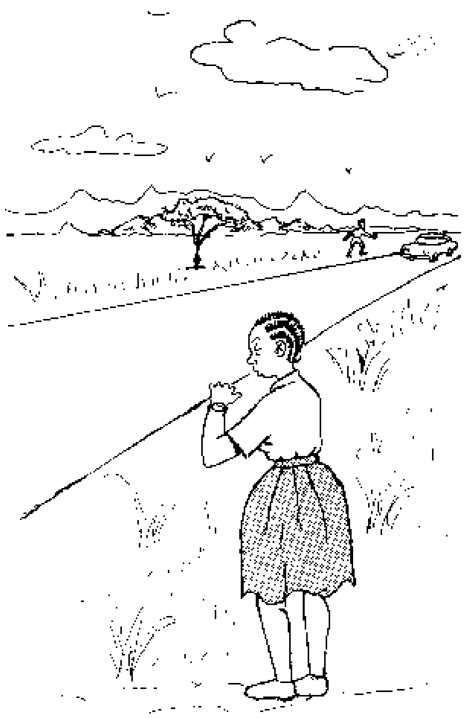

Mark a distance of 100 metres along a nearby road or playground. Note the time taken for a car, a bicycle or a sprinter to cover the distance as follows. One pupil waves down his hand as either the car, bicycle or sprinter crosses the 0 metres mark. Another pupil with a watch, starts timing at the same time. A third pupil at the 100 metre mark waves down his hand as the moving object crosses the 100 metre mark and at this instant the timekeeper stops his watch.

Pupils record the time taken for each case and figure out the respective velocities.

2.1.5 Simple Beam Balances

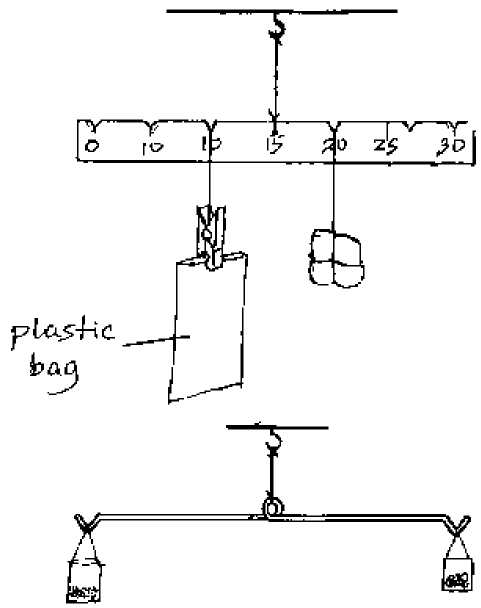

A balance for teaching moments and equilibrium can be made from a ruler or a thin wooden bar. A balance for introducing equilibrium consists of a wire with a loop for hanging in the centre and with two hooks at the ends.

2.1.6 Sensitive Laboratory Balance

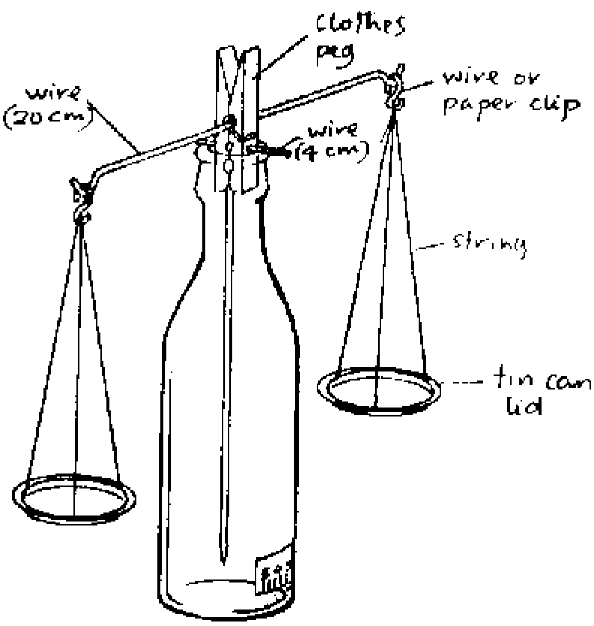

Drill a hole through a clothes peg below the spring for a wire or nail to pass through. Fix a wire right in the spring as a balance beam, and another one in the mouth of the peg as a pointer. (The shorter the pointer, the more sensitive the balance). Fit the arrangement in a wide mouth glass bottle or a plastic bottle marked with a scale.

2.1.7 Weights

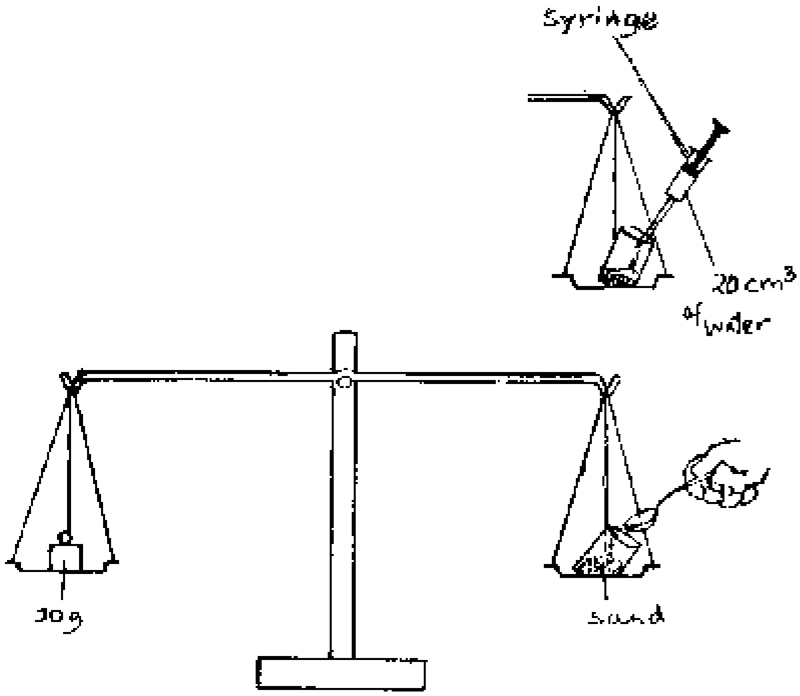

(a) Fill small plastic bags with sand or small stones and compare them with standard weights. Label and seal the bags with a small flame.

(b) Where there are no standard weights, use syringes or measuring cylinders to fill plastic bags with equal amounts of water. Use the fact that 1 cm^3 of water has a mass of 1 gram.

2.1.8 Weighing Pans

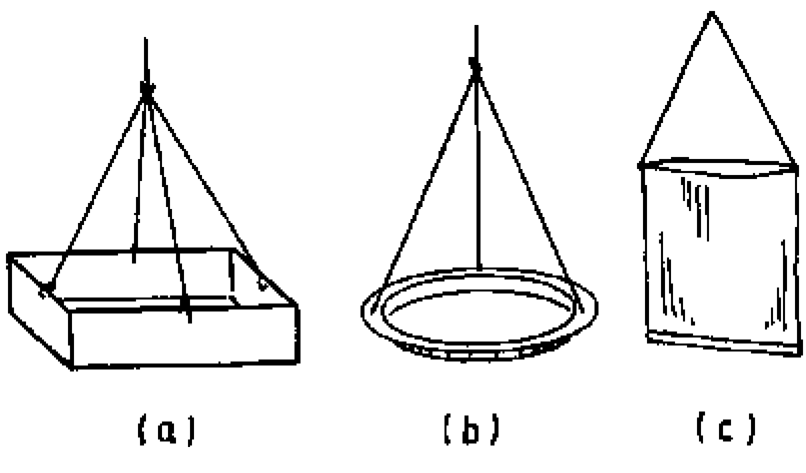

Weighing pans can be made from match boxes (a), plastic lids (b), or even small plastic bags (c) as used for wrapping ground nuts.

2.1.9 Measuring Liquids

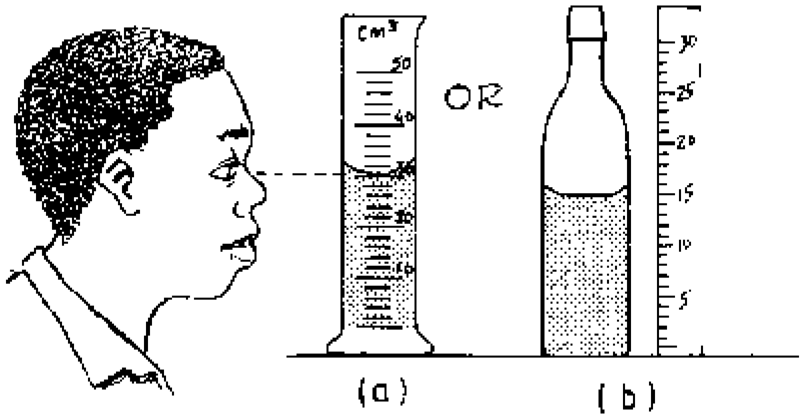

The volume of liquids can be measured by accurately reading the meniscus (a). The principle can be taught with a transparent bottle and a ruler (b).

2.1.10 Measuring Different Densities

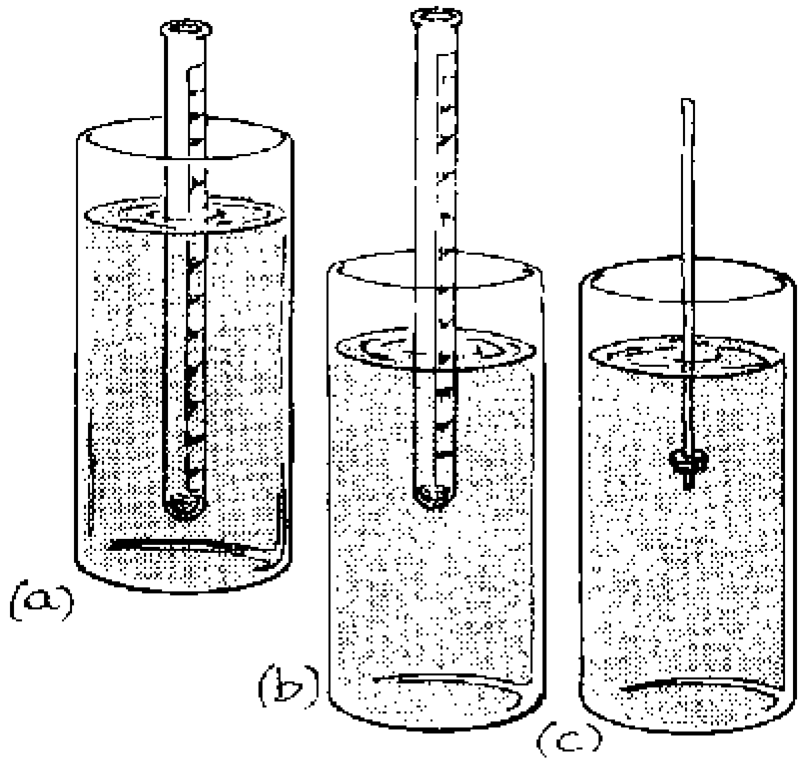

Fill a test tube with sand to keep it upright in water (b). Place a paper scale inside or fix a nut or a stone at one end of a wooden stick. Make regular marks (scale) along the wooden stick (a). Dip the tube or wooden stick in water (b), oil (a), (or kerosene, ethanol, etc.) and record in each case the extent to which the device sinks.

2.1.11 Measuring Irregular Bodies

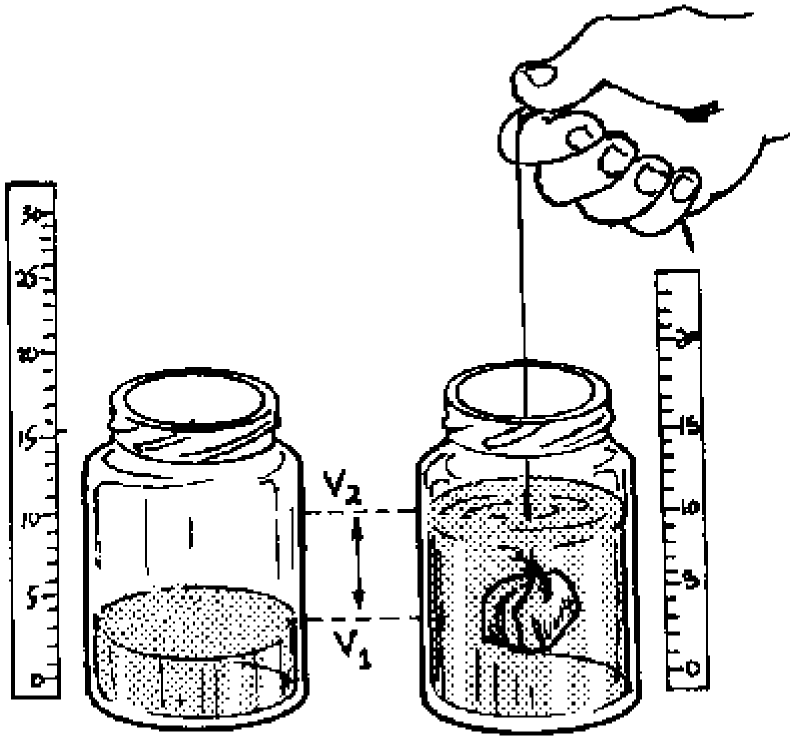

The volume of an irregular body (stone) can be measured by hanging it on a thin thread and dipping it completely in a measuring cylinder containing water. The difference in the volumes of the water read before and after completely submerging the irregular body is its volume. Only the principle is shown here.

2.1.12 Measuring Long Distances

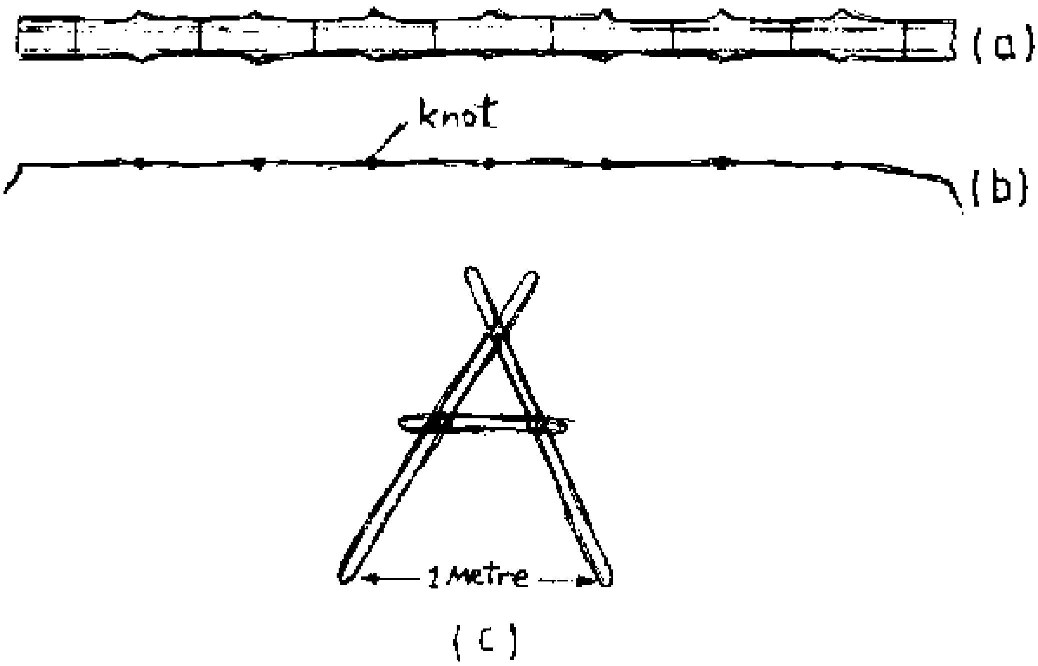

Measuring devices can be made from wooden sticks (a,c) or from strings by making knots at definite intervals (b). The sticks can be arranged closely together in succession to measure distances on uneven ground.

2.1.13 Wind Direction

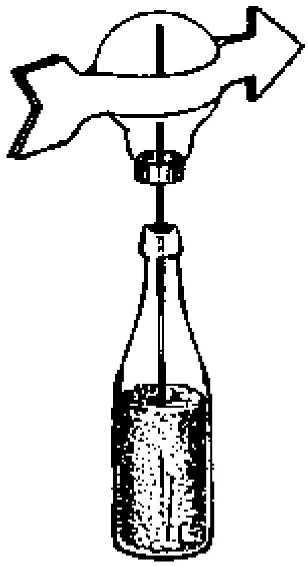

Take an opened fused bulb (for opening see appendix), place a piece of stiff wire so that the bulb turns with low friction on the tip of the wire. Fix two paper arrows folded around the bulb. Dip the wire in a sand filled bottle as a support. The device works excellently.

2.1.14 Wind Speed

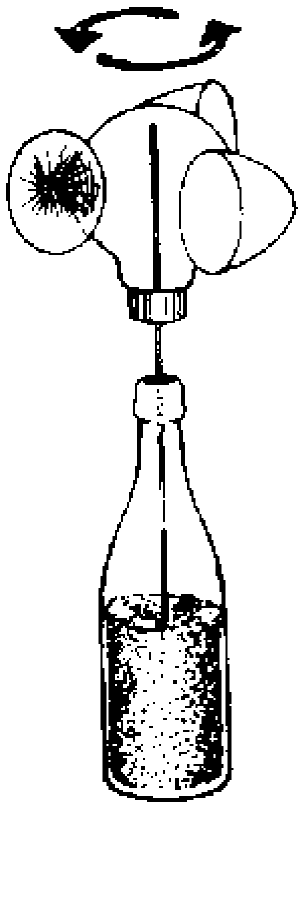

Fold 3 cones from round paper disks (preferably from cement bags or other resistant paper). One cone should be painted outside in a different colour for a better counting of the number of revolutions. Glue the cones to the bulb. Insert a piece of stiff wire which can be dipped in a sand filled bottle as a support (see experiment 2.1.13).

2.1.15 A Simple Current Indicator

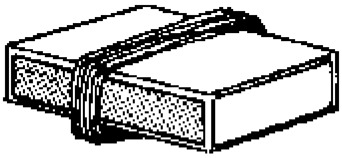

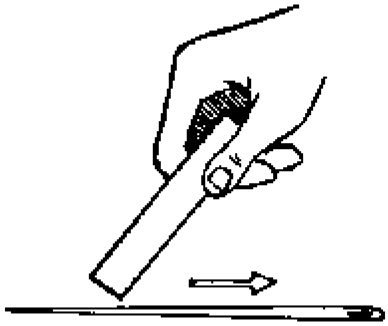

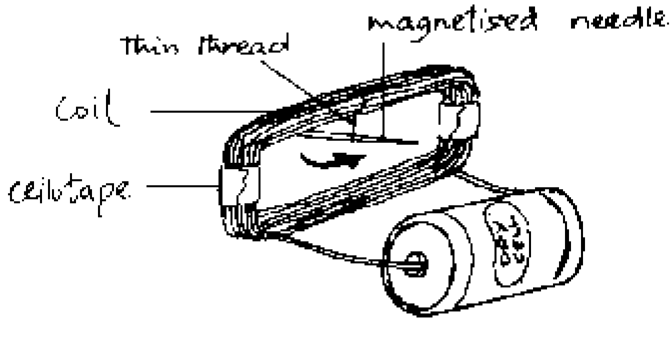

Wrap about 10 turns or more of insulated wire (from a used motor coil or as used for electric bells) round a match-box in order to get the required shape of the coil. Suspend a magnetised steel needle (or a magnetised piece of a bicycle spoke) with a thin thread inside the coil. You can magnetise the needle with a magnet (taken from the loudspeaker of an old radio) by moving it along for about 30 times always in the same direction. When a current flows through the coil, it deflects the needle. A change of the poles changes the deflection.

3. Basic Mechanics

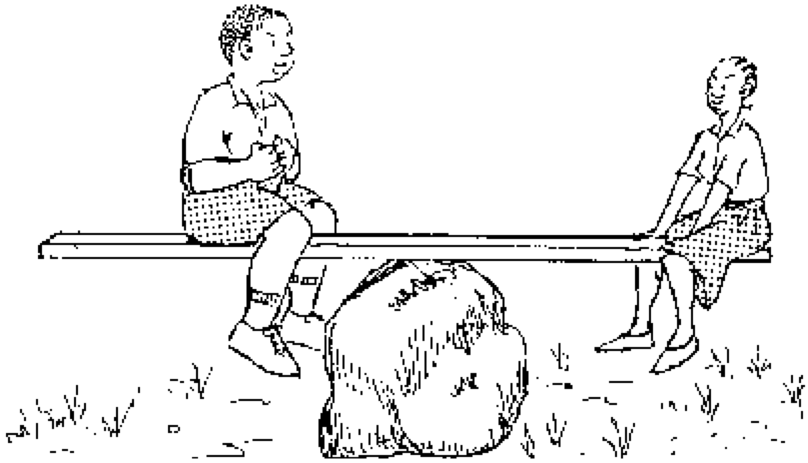

3.1 Rectilinear Motion

This section introduces the uniform and the accelerated rectilinear motions, i.e. those having constant velocity and constant acceleration.

Definitions:

Displacement = distance measured along a straight line
Velocity = displacement ÷ time taken
Acceleration = change in velocity ÷ time taken

Uniform and accelerated motions play an important role in the movement of cars, buses, trains, ships and aeroplanes.

3.1.1 Uniform Motion

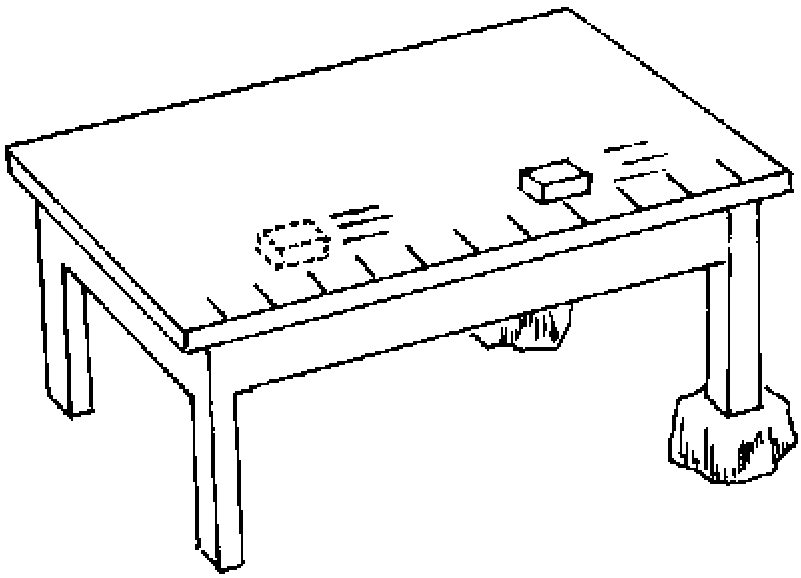

P: Place chalk marks along the long side of a smooth table or plank at an equal distance of 10 cm. Then tilt it so that a matchbox loaded with a stone will just not start to move. Then give the box a little push so that it will move.

Q: Does it need always the same time from one mark to the next?

O: If not, change the inclination of the table or plank until it does.

E: If so, this is a *uniform* rectilinear motion: the velocity is constant, there is no change in velocity, thus the acceleration is zero.

A: Where does this motion occur in daily life? **-** For example, a bus, a train or a boat going at constant speed on a straight line path.

3.1.2 Accelerated Motion

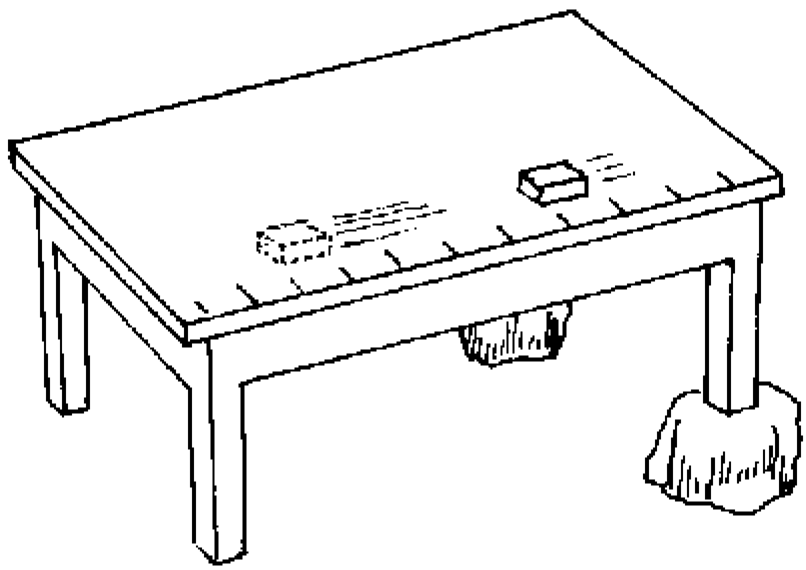

P: Tilt the smooth table or plank more than in experiment 3.1.1.

Q: How is the time which the matchbox needs to cover the distance between two marks? Is this time getting shorter when the box moves down?

E: If so, this is an *accelerated* motion. Its velocity changes as the box moves down. Its velocity *increases.* Thus, it is an accelerated rectilinear motion.

A: Where do such motions occur in daily life? - For example, a stone falling down; a bus accelerating after the stop; a bus breaking before a stop.

3.2 Forces

What is a force? *A force is a push or a pull on a body.* It can be recognised by its effects on a body which are:

Change in velocity of a body (accelerating, breaking, changing the direction of the movement); Deformation of a body (changing its shape or size).

3.2.1 The Effects of Forces

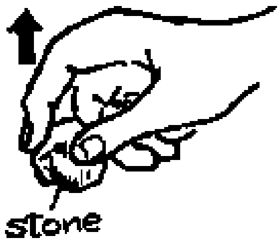

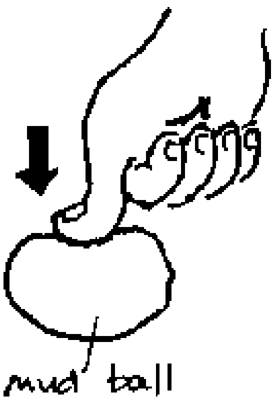

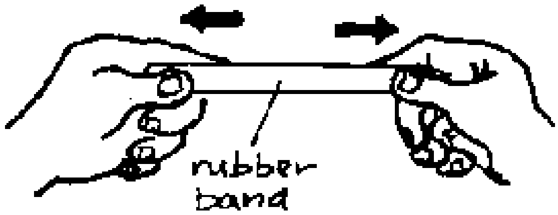

P: Show the effects of forces by pushing, pulling, lifting, turning a stone; by stretching a rubber band.

Q: How can you group these effects of force?

E: Pushing, pulling, lifting, turning *change the velocity of a body.* - Compressing and stretching *change the shape or size of a body.*

A force changes the velocity or the shape of a body.

3.2.2 Making a Newton Balance

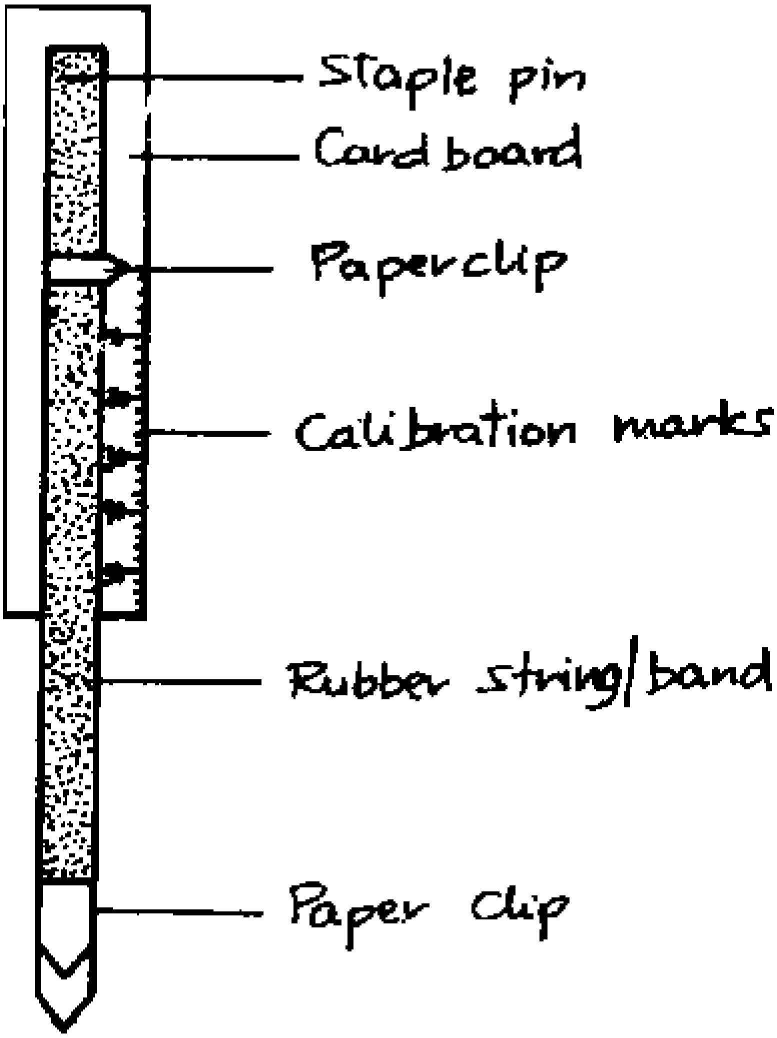

Forces are measured with a Newton balance.

P: Take a strip of card board or a wooden lath. Using incisions or a nail fix a rubber band on it. (The stronger the rubber band, the larger the force you can measure.) Attach one paper clip as a pointer as shown in the figure. Then fix some paper clips as a hook at the bottom end of the rubber band.

Now *calibrate* the balance in *newtons* using either a standard set of weights (e.g. borrowed from the lab of a well equipped school) or another Newton balance: a weighing piece of 1 g mass has a weight of 0.01 N; one of 10 g mass has a weight of 0.1 N; one of 100 g mass has a weight of 1 N and so on. Draw marks accordingly on the scale of the balance.

H: Never apply such a big force that the pointer does not go back to the zero mark when the force ceases.

3.2.3 Direction of Forces

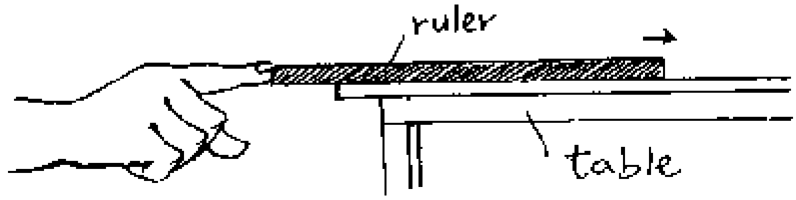

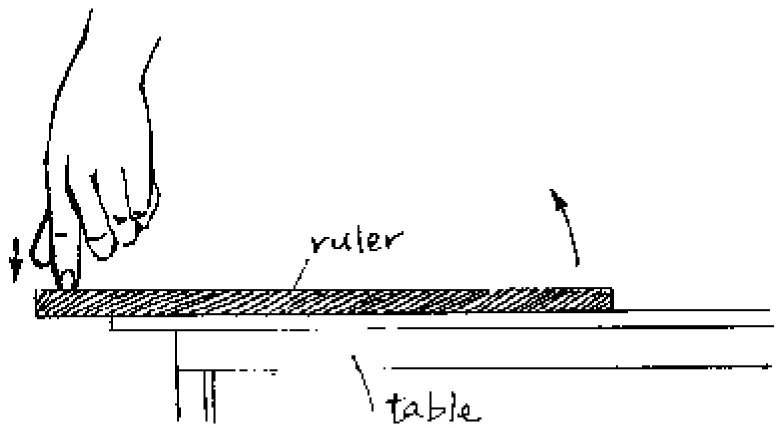

P: Show that the direction of a force is important for the effect of a force by applying a force on a stick in various directions, see the figure.

3.2.4 Forces as Vectors

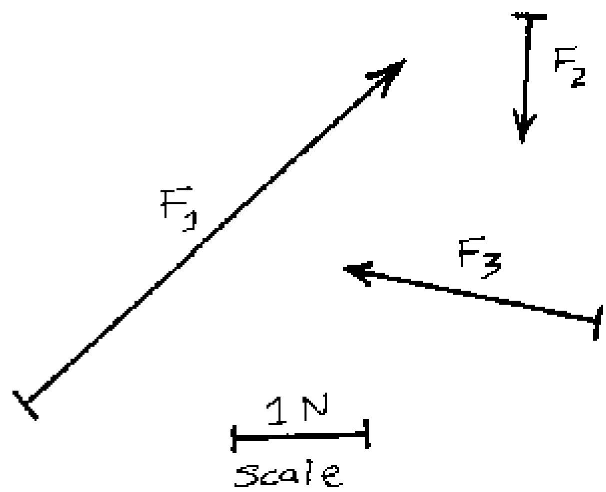

Quantities which have both direction and magnitude are called vectors.

Thus, for example, force, displacement, velocity and acceleration are vectors.

Vectors are drawn as arrows whose length gives the magnitude.

Draw some forces like those in the above figure and a scale on the blackboard and ask the students to give the direction and magnitude of these forces.

3.2.5 Measuring Forces

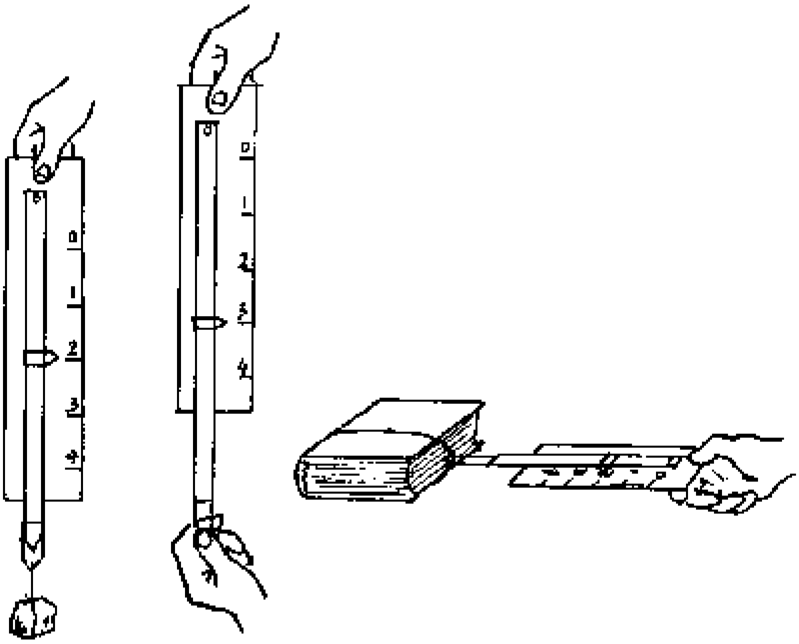

P: Using your Newton balance measure various forces like the force needed to lift different stones, the force needed to pull a book sliding over your desk, the force to stretch a spring, etc.

3.2.6 Drawing Forces

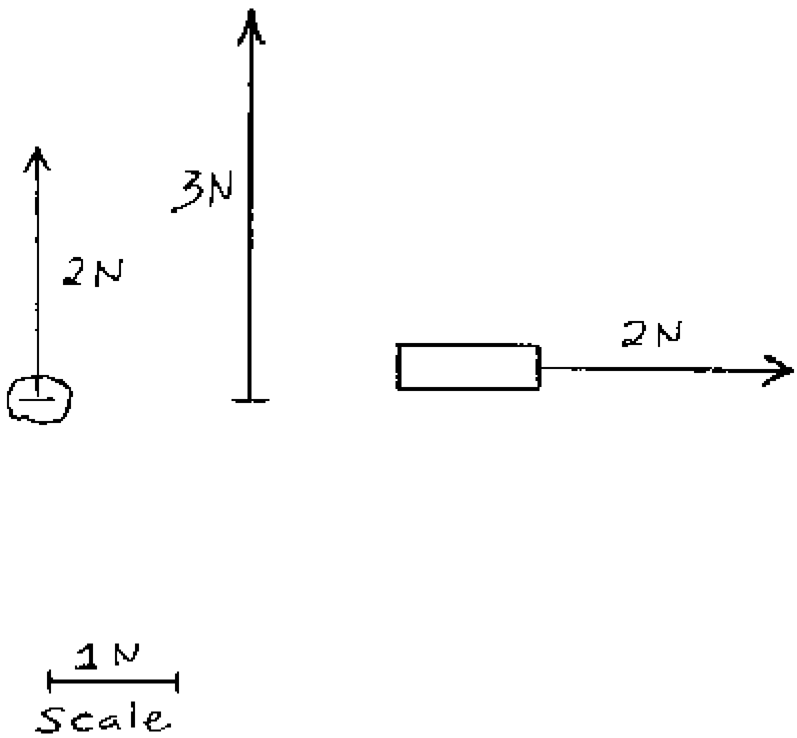

P: Ask the students to draw all the forces which you have measured in experiment 3.2.5 as vectors in their notebook.

3.3 Weight and Mass

The *weight* of a body is the pull of the earth on it. Thus, weight is a *force* measured in newtons. It is a *vector* directed to the centre of the earth. It is measured by the Newton (spring) balance.

The *mass* of a body is a measure for the quantity of matter in that body. Thus, it is a *scalar* which *stays everywhere the same* while the weight of body will decrease when its distance to the centre of the earth increases. It is measured by the beam balance.

3.3.1 Weight as the Pull of the Earth

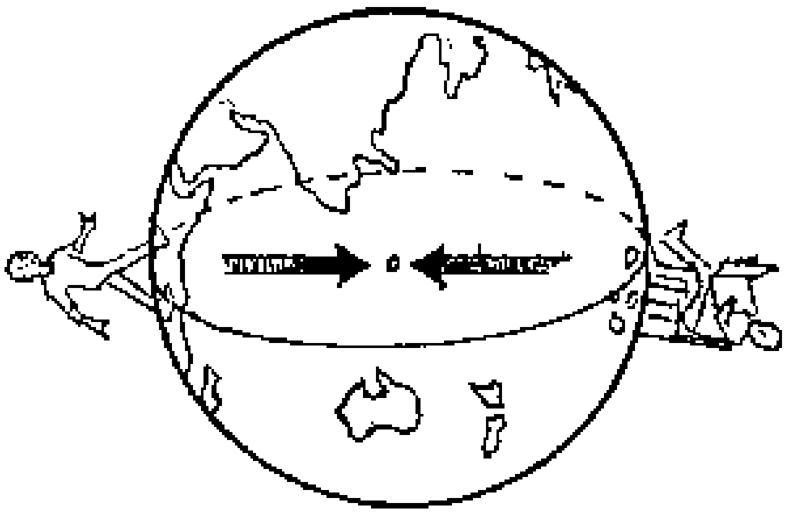

P: Hold a stone at the level of a table plate and release it.

Q: What do you observe?

O: It will fall down to the floor.

E: It changes its velocity, i.e. a *force* must act on it. This force is the pull of the earth on the stone. This pull is always directed to the centre of the earth. Thus, the weight has magnitude and direction. It is a *vector.*

Hence, as the figure shows, the weight of people in different regions of the world has different directions. However, it is *always directed to the centre of the earth.*

The *magnitude* of the weight of the same body is *not* everywhere the same. The further away from the centre of the earth the body will be, the less its weight will become.

3.3.2 Mass as the Quantity of Matter

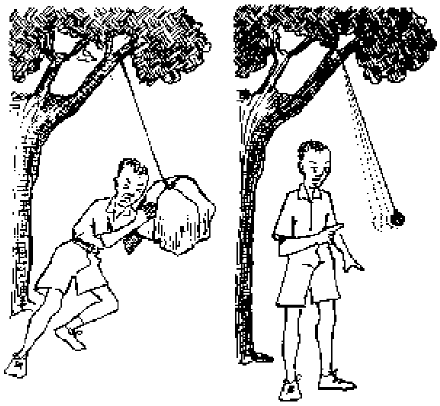

P: (a) Suspend a large and a small stone using long pieces of string (e.g. from a branch of a tree). Try to push the two stones. Then try to stop them.

Q: Which stone is harder to push? Which is harder to stop?

P: (b) Take a ball and a stone or brick of similar size. Throw both.

Q: Which is harder to throw?

O: (a) The larger stone is harder to push and to stop than the small stone.

(b) The stone or brick is harder to throw than the ball.

E: The greater the mass of a body, the more it resists to any change in its velocity. We say, the greater the mass of a body, the greater its *inertia.*

The quantity of matter of the same body, and hence its mass, is everywhere (e.g. on the earth, on the moon, etc) the same. Mass has no direction, thus it is a *scalar.*

3.3.3 Weight is Measured by the Newton (Spring) Balance

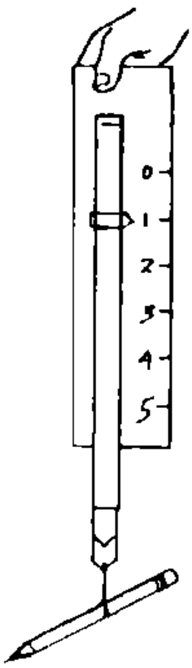

Since weight is a force, it is measured by the Newton (or spring) balance.

P: Take a Newton balance (see p. 15) and measure the weight of a pencil, a book, etc. in newtons.

3.3.4 Mass is Measured by the Beam Balance

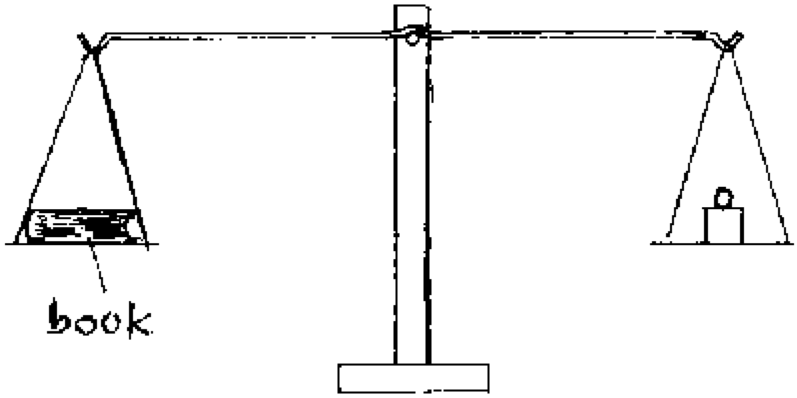

The mass of a body is measured by the beam balance.

P: Take a beam balance and a set of weighing pieces (see p. 10) and measure the mass of a pencil, a book, etc. in grams (g).

3.3.5 The Surprising Pencil

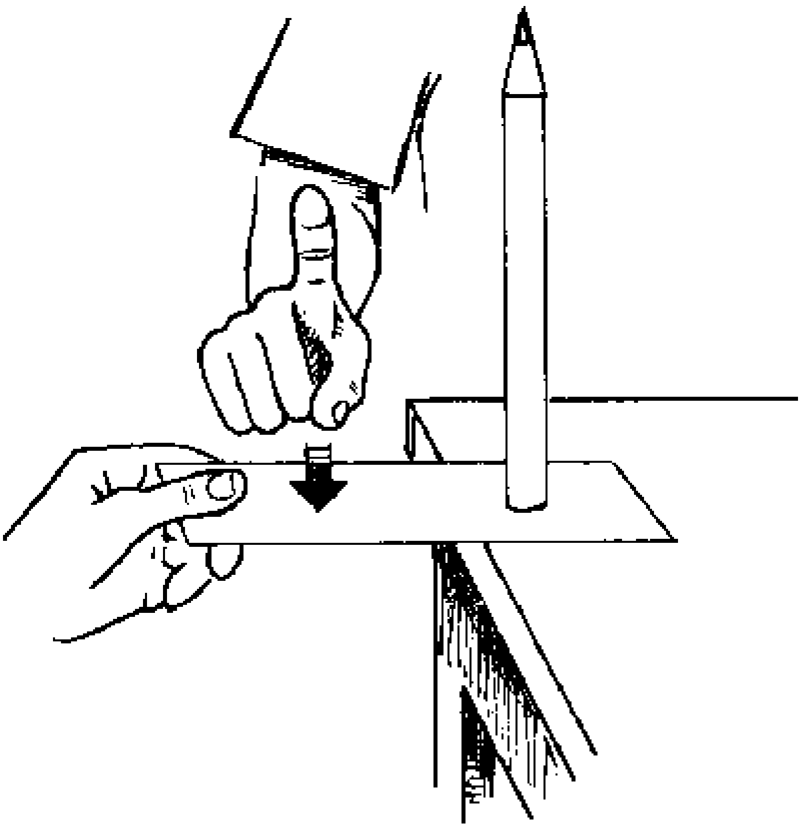

P: Stand a pencil upright on a strip of paper near the edge of a table. At once hit the strip with your finger so that it leaves the table, see the figure.

Q: What happens? How do you explain this?

3.3.6 The Standing Passenger in the Pick-up

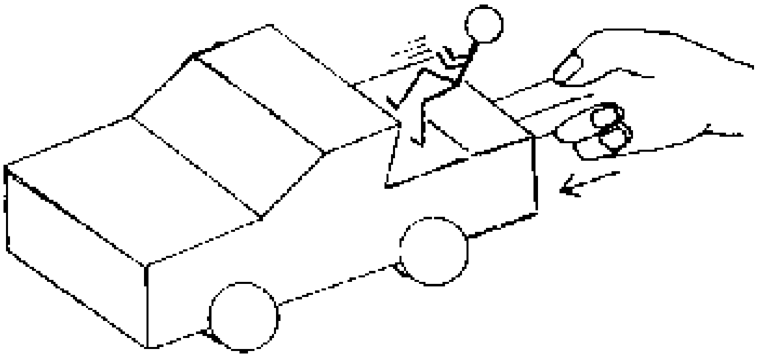

P: Take a toy pick-up or a box (representing a pick-up) and place a *freely standing* passenger (made of card or wood) in it. Strongly accelerate the pick-up. Make it turn a corner. Finally slop the pick-up suddenly.

Q: What happens to the standing passenger in each case? Why?

3.3.7 Kicking a Brick

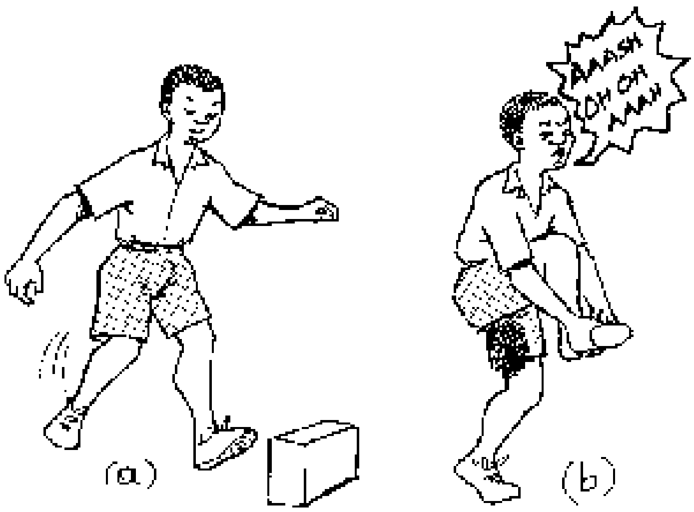

P: Ask students to draw the figure on a display chart.

Q: Why does the student feel great pain after he kicked the brick? Would the same happen, if he kicked the same brick on the moon?

E: He feels pain because the brick has a greater mass, and hence a greater inertia than a football. The same would happen at the moon, because the mass, and hence the inertia of the brick, is the same on the moon.

3.3.8 Car Crash

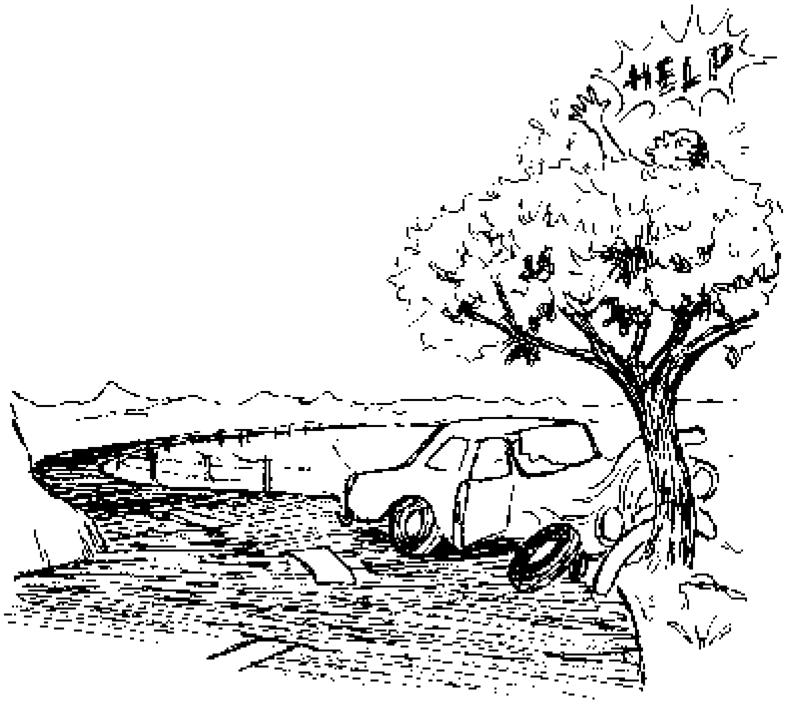

P: Make a display chart of the figure.

Q: Why did this car get so badly damaged?

E: The big mass of the car has great inertia. Thus, a great force exerted by the tree was needed to stop it suddenly. This force deformed the car.

3.3.9 The Weight Changes

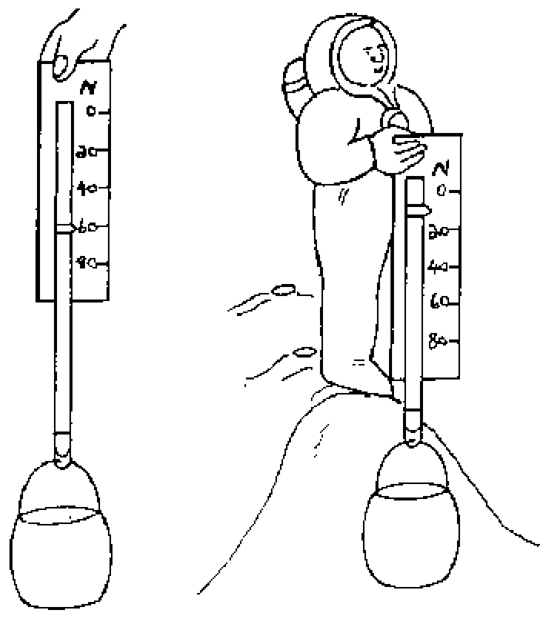

(a) On the earth (b) On the moon

P: Make a display chart of the figure.

Q: Why is the weight of the same bucket of sand less on the moon than on the earth?

E: The weight of a body depends on the place where the body is. It is *not* everywhere the same.

3.3.10 The Mass Stays the Same

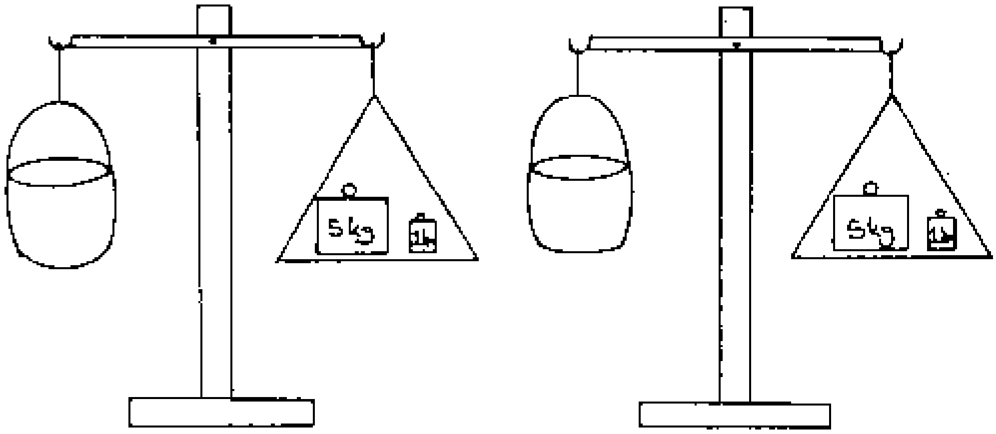

(a) On the earth (b) On the moon

P: Make a display chart of the figure.

Q: Why is the mass of the bucket of sand the same on the earth and on the moon?

E: The quantity of matter of the bucket has not changed, hence its mass has not changed.

3.4 Centre of Gravity and Stability

This section deals with the moment of a force, the centre of gravity (centre of mass) and stability.

Moment of a force = force x perpendicular distance from the pivot

In equilibrium: total clockwise moment = total anti-clockwise moment

The *centre of gravity* (centre of mass) *is the point in which the total weight of the body seems to act.*

The stability of a body depends on the position of its centre of gravity (COG).

A body is in *stable* equilibrium if a small movement would rise its COG.

A body is in *unstable* equilibrium if a small movement would lower its COG.

A body is in *indifferent* equilibrium if a small movement would keep the COG at the same level.

3.4.1 Moment of a Force

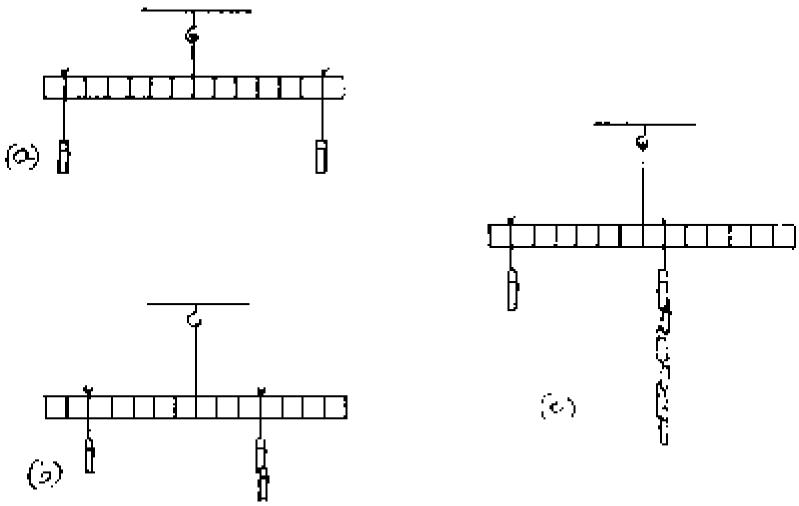

P: Cut a piece of cardboard 40 cm x 3 cm and attach a supporting string exactly at the middle of it in a hole near the top (see figure). Mark six 3 cm spaces on each side of this middle point *(fulcrum).* Suspend this balance e.g. from the back of a chair and balance it by cutting off a little from the heavier side. Tie pieces of thread of about 20 cm length into loops about 7 cm long to support the weights. Use e.g. *equal* clothes-pegs as weights and balance them in many ways (see fig.).

Multiply weight x distance (from the fulcrum) for each side of the balanced beam.

Q: Prepare a table for several weights and distances from the fulcrum.

E: A force acting at a distance from a fulcrum has a *turning* effect which is called *moment* or torque. It can be calculated:

Moment = force x perpendicular distance (from the force to the fulcrum)

Our table shows that *the clockwise moment must be equal to the anti-clockwise moment in order to achieve equilibrium.*

A: The beam balance (see p. 10), the roman steelyard and other levers (see section 3.10).

3.4.2 Centre of Gravity (COG)

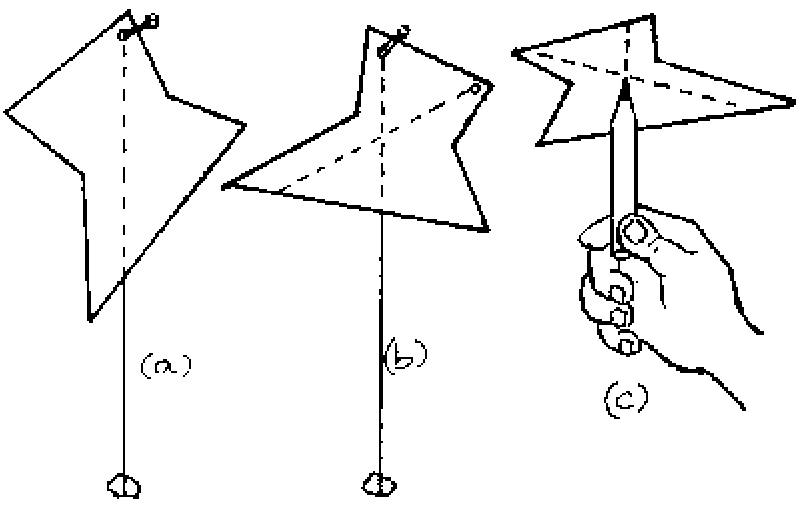

P: (a) Cut a piece of card into an odd shape (see fig.(a)). Suspend it from a nail and attach a string with a stone. Mark the position of the string using two crosses. Join these using a ruler to form a pencil line.

(b) Repeat (a) but fix the nail in another position on the card (see fig.(b)). Where the two pencil lines meet is the *centre of gravity* of the card.

(c) Now support the card with the tip of a pencil below the centre of gravity.

Q: What do you notice about the stability of the position of the card?

E: The position of the card remains stable as long as it is supported in the centre of gravity because now all the moments of the weights of all the mass particles of the card balance.

3.4.3 The Funny Jumper

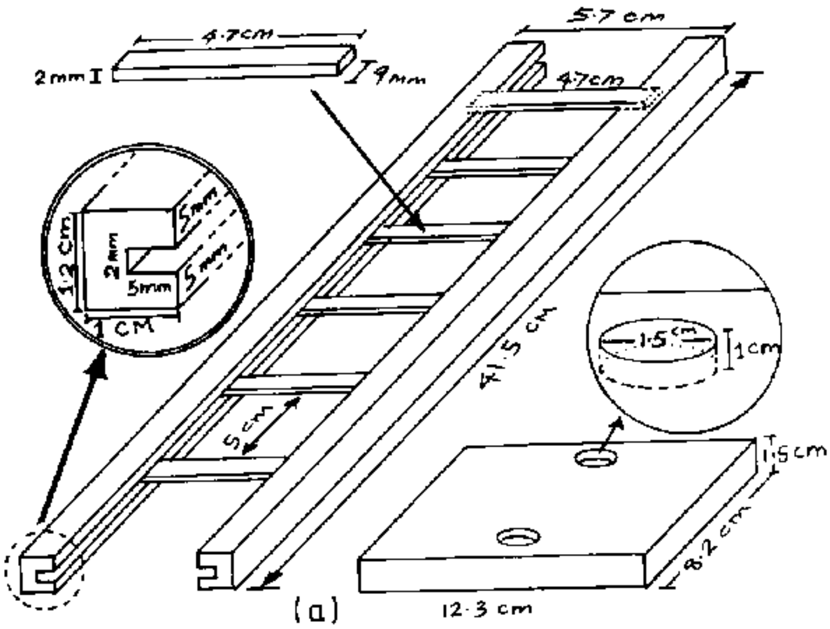

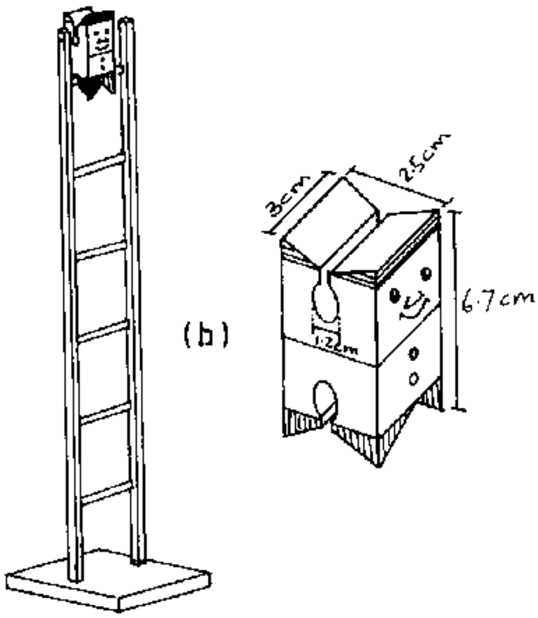

P: Ask a carpenter to make the funny jumper according to fig.(a) and (b). Place the jumper *feet down* on the uppermost step of the ladder.

Q: What happens? Why?

O: The jumper jumps from one step to the next down the whole ladder.

E: First the centre of gravity of the jumper is above a step of the ladder. This is an *unstable equilibrium since* the COG is lowered when the jumper turns round to hang on that step. However, due to the slot it has, it then falls down to be *above* the next step. Thus, the process is repeated until the jumper meets the ground level.

3.4.4 Balancing Nails

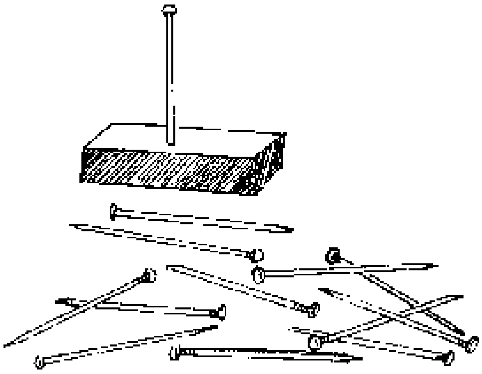

(a)

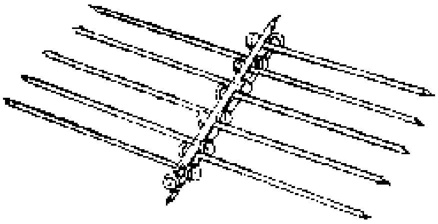

(b)

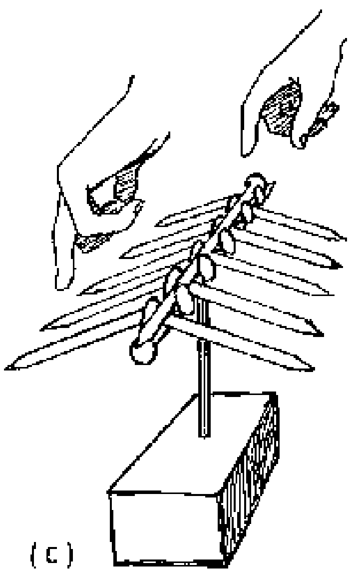

(c)

P: Give the students 2 inch nails (see fig.(a)) and ask them to balance them all on top of the nail which was fixed on the piece of wood. In doing this, the nails must neither be bent nor glued together etc.

This may be a challenging riddle for the students!

E: This riddle can be solved by arranging the nails according to fig.(b) when lying on the table. Then lift this arrangement carefully to the top of the first nail and balance it there. The COG is now lower than the supporting head of the first nail. Thus, a *stable equilibrium* is reached.

3.4.5 The COG of a Ruler

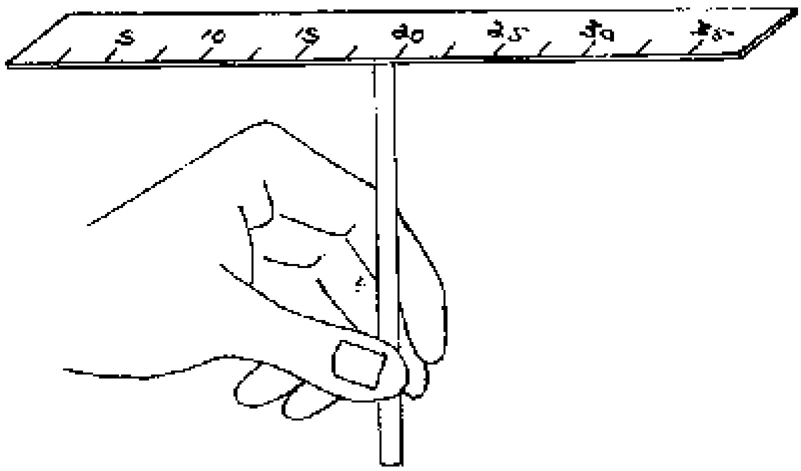

P: Find the centre of gravity of a ruler by balancing it on the tip of a pencil.

Q: Where does the COG of the ruler lie? Why?

3.4.6 Candle Balance

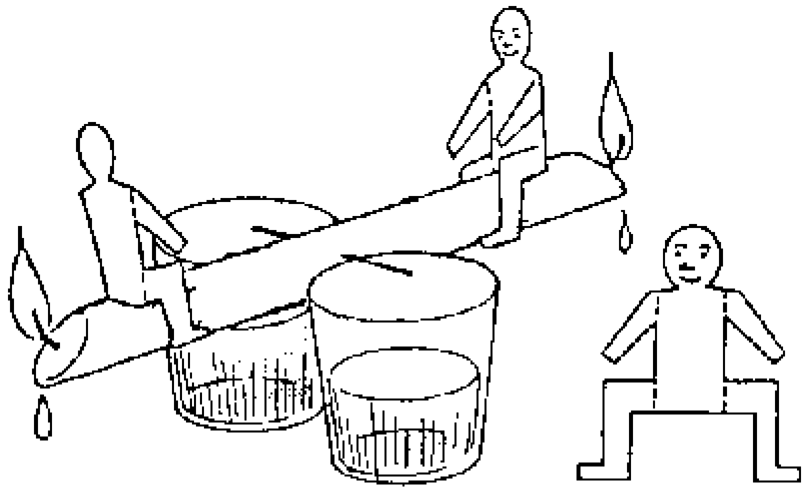

P: Construct a candle balance as shown in the figure.

Q: What happens? Why?

3.4.7 Balancing Coins

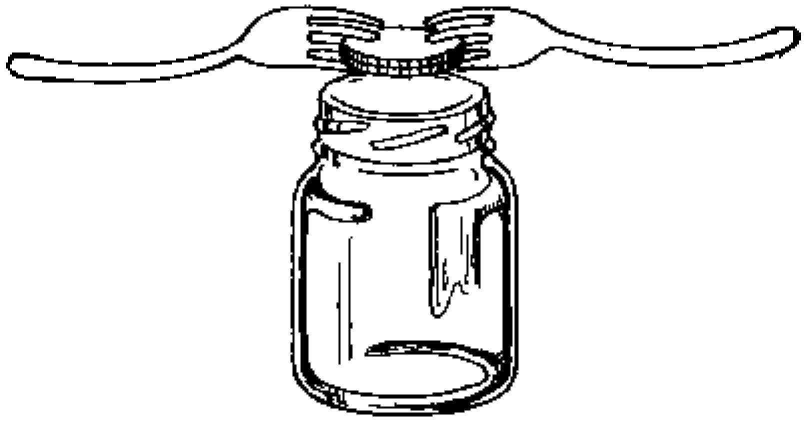

P: Take two coins and attach two forks to them as shown in the figure. Balance this arrangement on the rim of a jam glass.

Q: Why do the coins not fall down?

3.4.8 Riddles

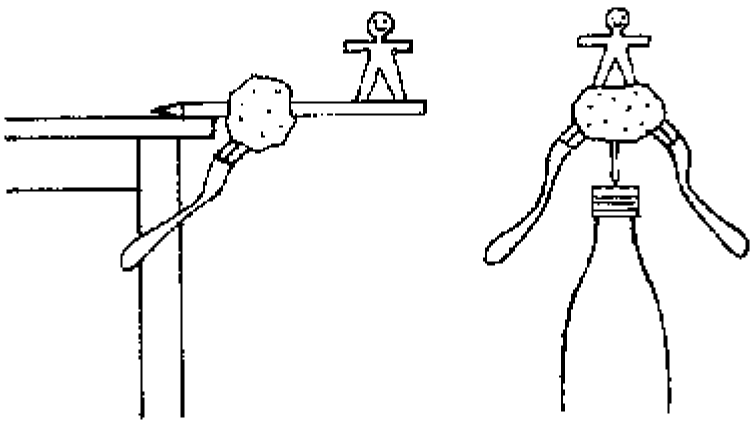

P: Produce the arrangements shown in the figures (a) and (b).

Q: Why do they not fall down?

3.5 The Force of Friction

The force of friction always opposes motion. Friction may be reduced by lubrication. Rolling friction is less than sliding friction. The rougher a surface, the greater the force of friction.

Friction plays an important role in daily life. Without friction we would be unable to start walking.

Any woven material would decompose because it is held together by friction of the threads only. However, we have to reduce friction in the bearings of moving parts of vehicles and other machines in order to save fuel.

3.5.1 Friction Produces Heat

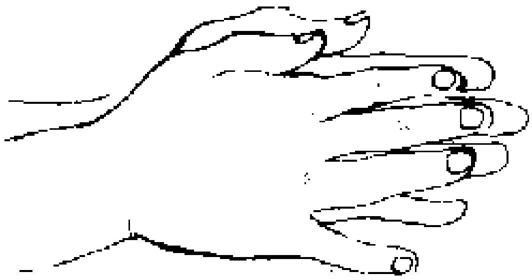

(a)

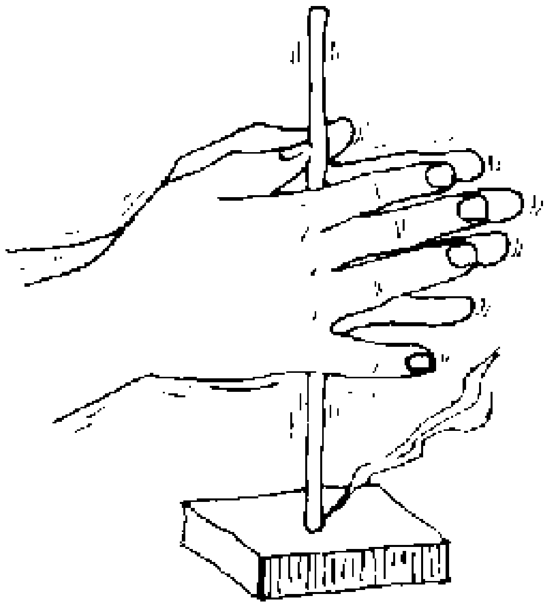

(b)

P: Rub your hands.

Turn a stick very quickly between your hands and press its tip onto a piece of wood.

Q: What do you feel on your hands?

What do you observe on the piece of wood?

How do you explain this?

O: The hands become warm, the piece of wood starts smoking and finally burning.

E: Friction produces heat which can light wood if great enough.

A: Lighting a fire without matches.

3.5.2 Friction and the Kind of Surface

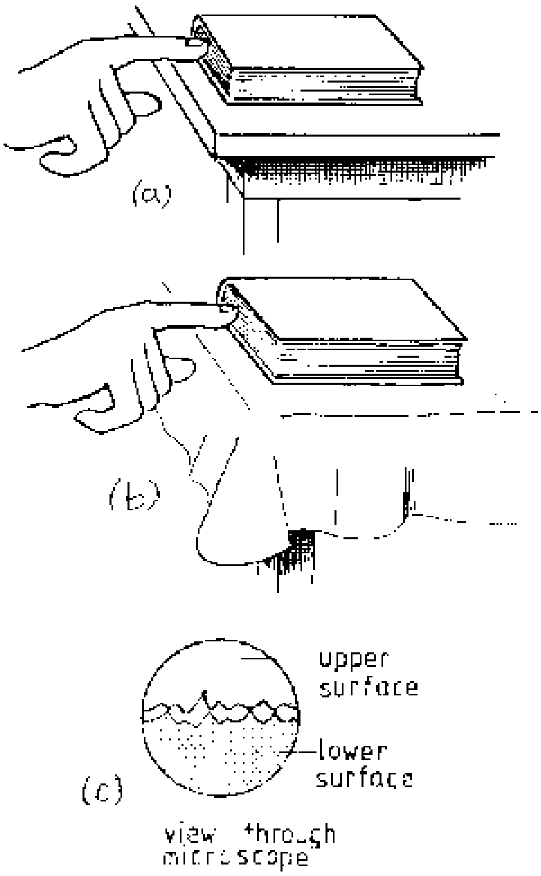

P: Pull a book on a bare table surface and then on a piece of cloth.

Q: On which surface is it harder to pull? How docs the force of friction compare on the two surfaces? How can we explain friction?

O: It is harder to pull the book on the cloth than on the bare surface of the table.

E: The rougher the surfaces are which slide on each other, the greater the force of friction is. The "mountains" and "valleys" of the surfaces tooth and hence cause the force of friction, see figure (c).

3.5.3 Lubrication

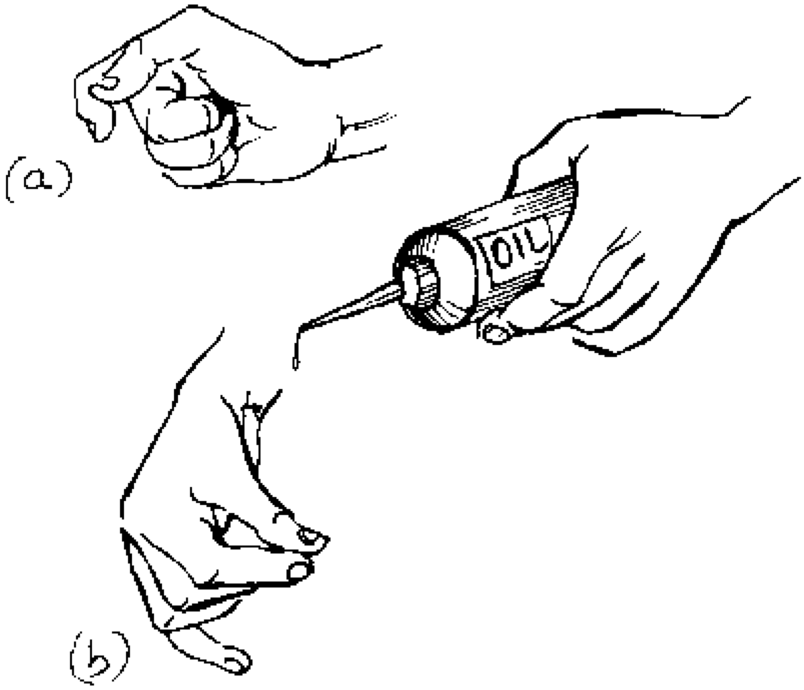

P: Rub your thumb and a finger together. Then place a drop of cooking oil or margarine on your thumb and repeat rubbing.

Q: How do the forces of friction (needed for the rubbing) compare in the two cases? Hence, what can be done to reduce friction?

A: Lubrication of bearings etc. to reduce friction.

3.5.4 Rolling and Sliding Friction

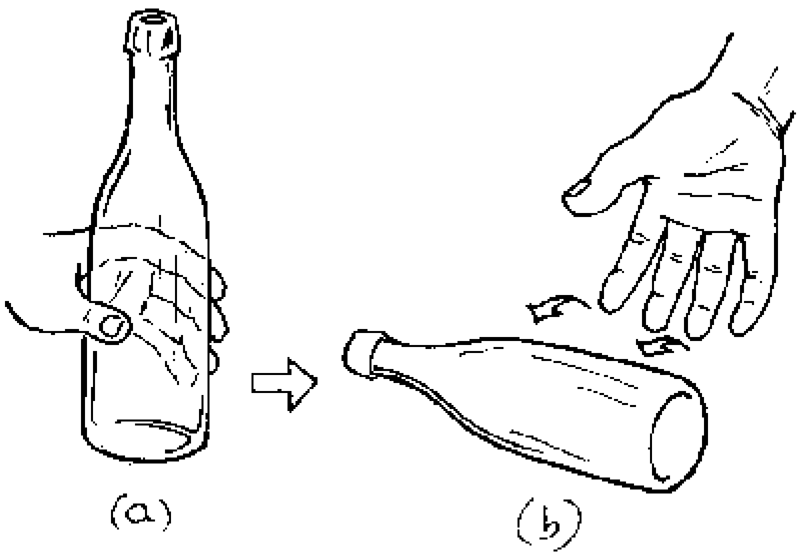

P: Slide a bottle or tin and roll it.

Q: How are the forces of friction in each case?

3.5.5 Rolling Friction

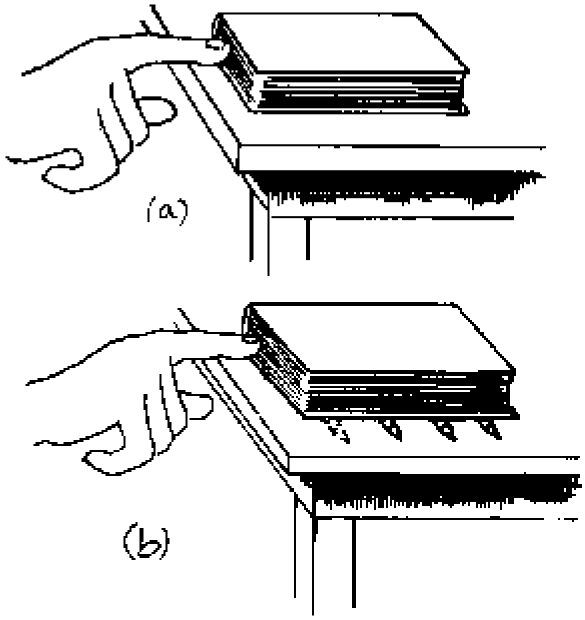

P: Pull a book over a table. Put some round pencils or drinking straws between the book and the table.

Q: How do the forces of friction compare now?

A: Roller bearings, ball bearings.

3.5.6 Where Friction is Needed

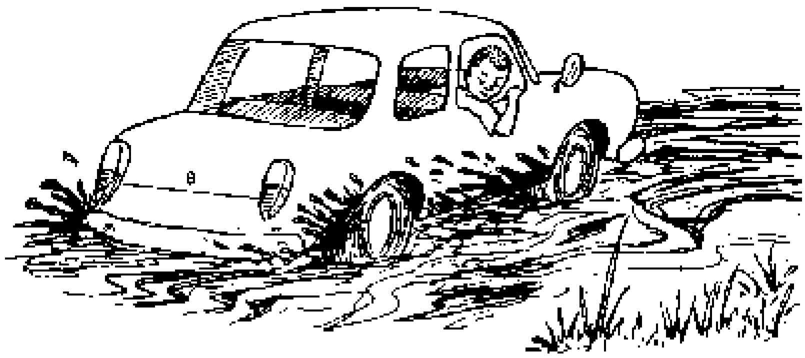

P: Ask students to draw the figure on a display chart.

Q: Why does the car *not* move even though the wheels turn?

E: There is not enough friction between the tyres and the road to get the car moving.

3.6 Density

The density of a substance tells us which mass the unit volume of that substance has got. Thus, it is defined as follows:

Density = mass + volume.

For any pure substance the density is constant at constant temperature and pressure.

Hence, density may be used to identify substances.

3.6.1 The Density of a Solid

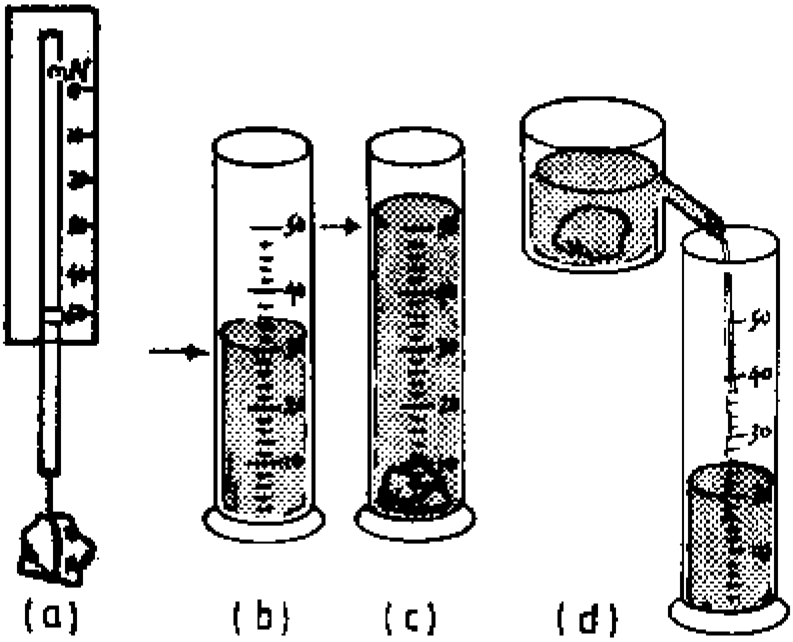

P: Attach a stone to a thread and determine the weight of the stone using a Newton balance, see fig.(a). Calculate the mass of the stone. Fill a measuring cylinder partly with water and record the volume, see fig.(b). Now immerse the stone fully in the water and record the new volume, see fig.(c). The difference in volume gives the volume of the stone. Alternatively, you can produce an overflow can from a tin using aluminium foil to make the overflow pipe, see fig.(d). Make the joint of pipe and tin water-tight using glue. Now calculate the density of the stone.

E: Assume that the stone has a weight of 0.5 N. Then its mass is

$$0.5 \text{ N} \div 10 \text{ N/kg} = 0.05 \text{ kg} = 50 \text{ g}$$

(Of course, the mass could be measured using a beam balance.)

Assume that the volume of the water displaced by the stone is 20 cm^3. Then the density of the stone is

$$50 \text{ g} \div 20 \text{ cm}^3 = 2.5 \text{ g/cm}^3$$

A: The determination of density can help to identify a certain substance, e.g. to answer the question: "Is a certain ring really made of gold?"

3.6.2 The Density of a Liquid

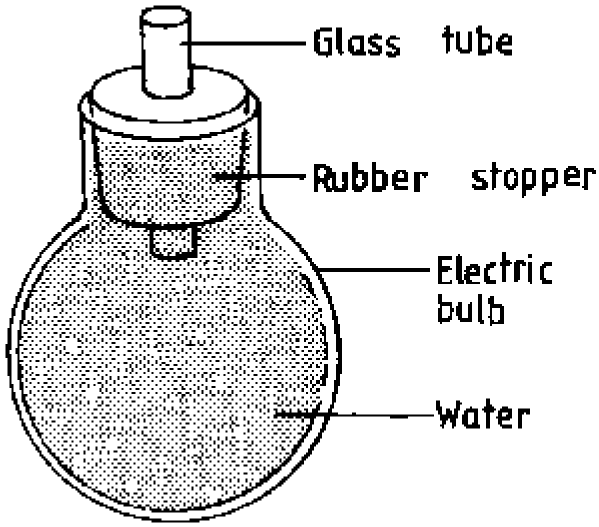

P: Prepare a density bottle from a worn out electric bulb fitted with a rubber stopper. Weigh the bulb with its stopper in air, then weigh it when filled with water and then when filled with liquid A, whose density is required. Determine the respective masses. You may use the beam balance described on p. 10.

Q: Determine the mass of the water and of the liquid. Calculate the volume of the density bottle and the density of liquid A.

E: E.g: Mass of empty density bottle = 15 g

Mass of density bottle with water = 68 g

Mass of density bottle with liquid A = 45 g

Then: Mass of the water = 68 g - 15 g = 53 g

Thus: Volume of density bottle = 53 cm^3

Mass of liquid A = 45 g - 15 g = 30 g

Thus: Density of A = 30 g ÷ 53 cm^3 = 0.56 g/cm^3

H: Be very careful when opening the worn out bulb, see appendix.

3.7 Pressure in Liquids and Gases

The pressure in liquids and gases is caused by their weight. It is defined as follows:

Pressure = force ÷ area

The laws of pressure govern many technical devices like barometers, manometers, pumps, etc.

3.7.1 What is Pressure?

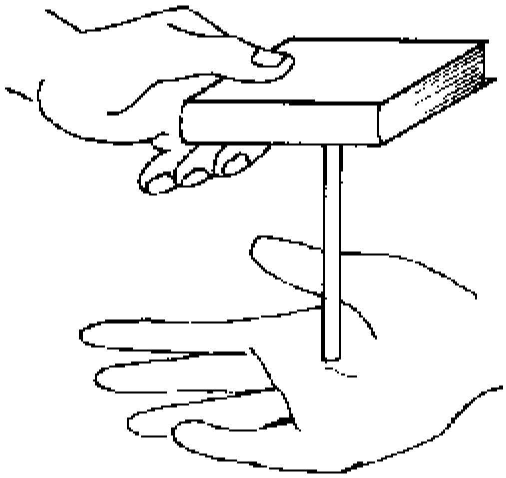

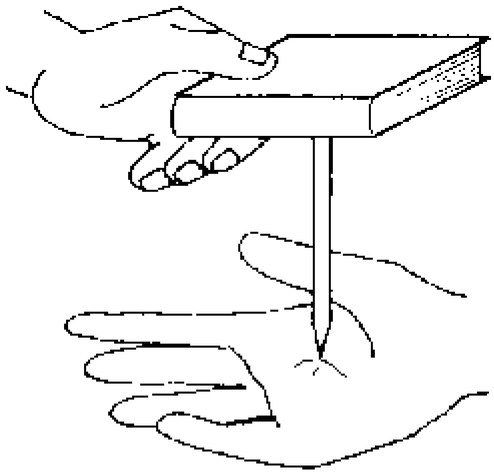

P: Ask a student to support a book as shown in figure (a). Then turn the pencil upside down as shown in figure (b).

Q: What will the student feel? Why?

O: In case (b) the student will feel pain on the hand supporting the pencil.

E: In case (b) the force with which the pencil acts on the hand is the same (equal to the weight of book plus pencil) as in case (a) but the pressure on the hand has increased very much since the area on which the pencil touches the hand has decreased so much. Hence, the students will understand that pressure = force ÷ area.

A: Large area feet of elephants; wide tyres of tractors; wide chains of caterpillar machines.

3.7.2 Liquid Pressure Increases with Depth

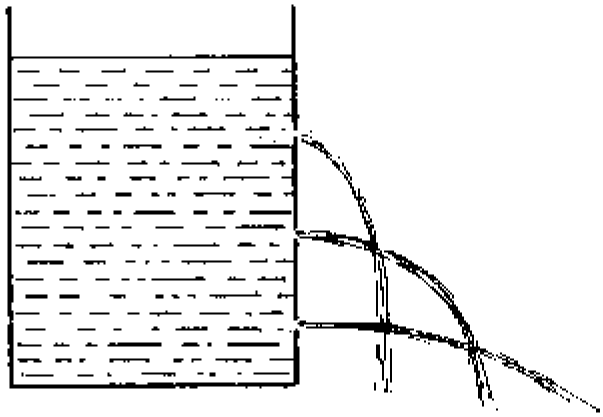

P: Pinch 3 holes into a tin according to the figure. Fill the tin with water up to its rim. What do you observe?

Q: How does the pressure change with the depth of the water? Why?

O: The water shoots the faster out of a hole, the greater the depth of that hole from the surface of the water in the tin.

E: The increasing speed of the water from the top to the bottom holes shows that the water pressure increases with the depth of the water. This is so because the weight of the water on top of a certain water particle acts on that particle causing pressure.

3.7.3 Carrying a Load on the Head

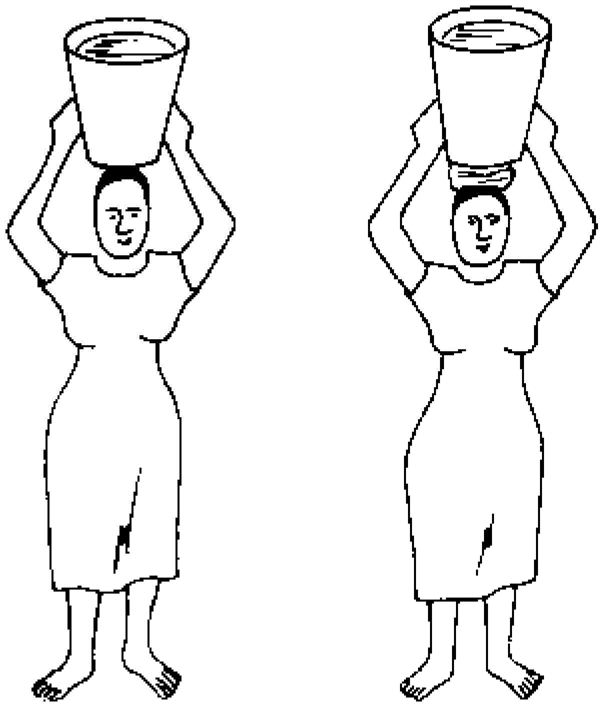

(a) (b)

P: Carry a bucket of water on your head without (fig. a) and with a "ngata" (fig. b).

Q: What difference do you feel? Why?

3.7.4 Liquid Pressure Acts in All Directions

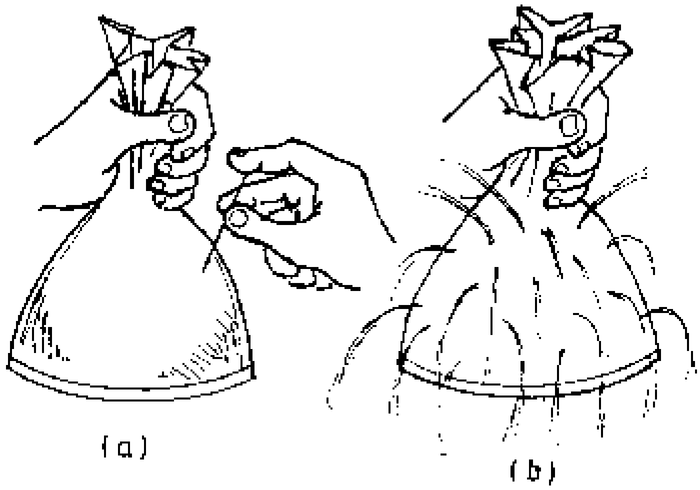

P: Pinch some small holes into a plastic bag using a needle. Fill it with water and squeeze the bag gently.

Q: In which directions does the pressure of the water act? Why?

O: The pressure acts in all directions.

E: The particles of a liquid can easily move behind each other while those of a solid are in fixed positions (see chapter 4.2).

3.7.5 Air Pressure: The Crashing Can

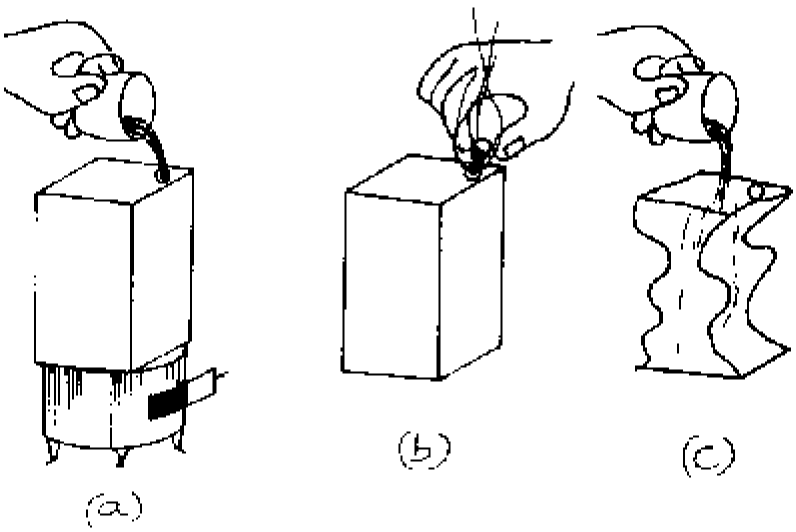

P: (a) Fill one cup of water into the large tin can. Then heat the *open* can to boiling.

(b) Remove the can from the fire and close it *immediately* air-tight.

(c) Now pour cold water on the can.

Q: What happens? Why?

3.7.6 Air Pressure

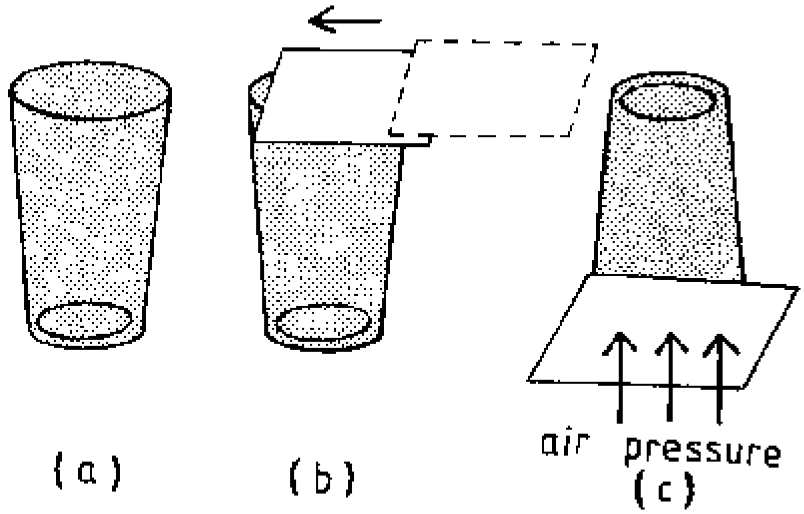

P: Fill a drinking glass up to the rim with water. Then push a smooth card or a sheet of smooth plastic from the side to close the glass so that no air bubbles are included. Then turn the glass upside down.

Q: Why will the card not fall off?

3.7.7 A Barometer

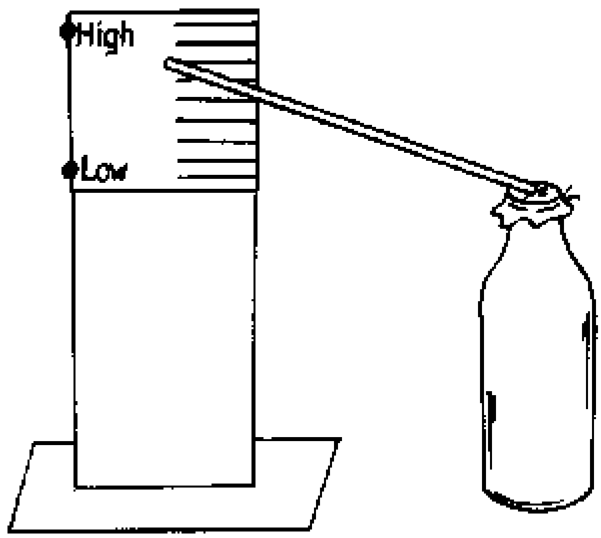

P: Assemble a barometer by closing a bottle *air-tight* by using a piece of plastic bag and a string. Glue the strow onto the middle of the piece of plastic and point the straw to a scale (see fig.)

Q: How does this barometer work, when the air pressure increases or decreases respectively?

3.7.8 A Manometer

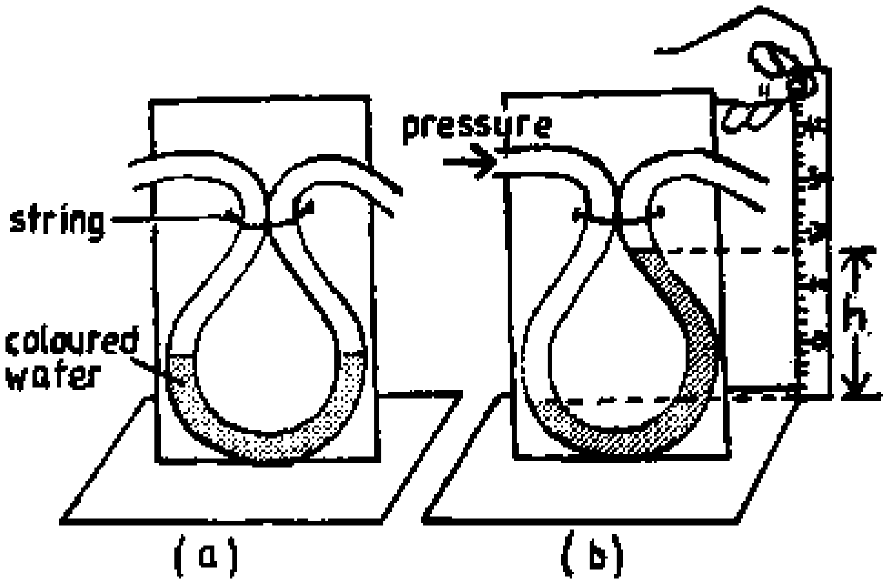

P: Make a manometer according to the figure. Use it to measure the water pressure at various depths of the tin of experiment 3.7.2, see p.26.

3.7.9 The Siphon

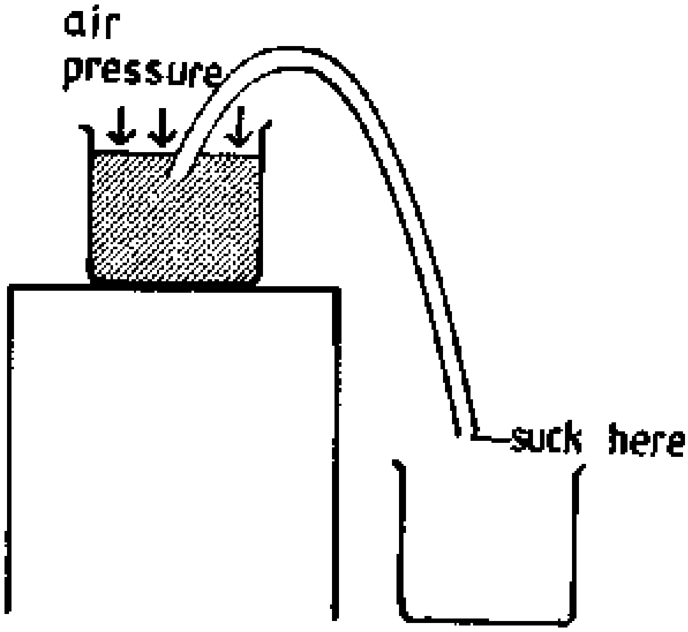

P: Arrange two glasses and a plastic or rubber tube as shown in the figure. Suck at the lower end of the tube.

Q: What happens? Why?

3.7.10 The Syringe

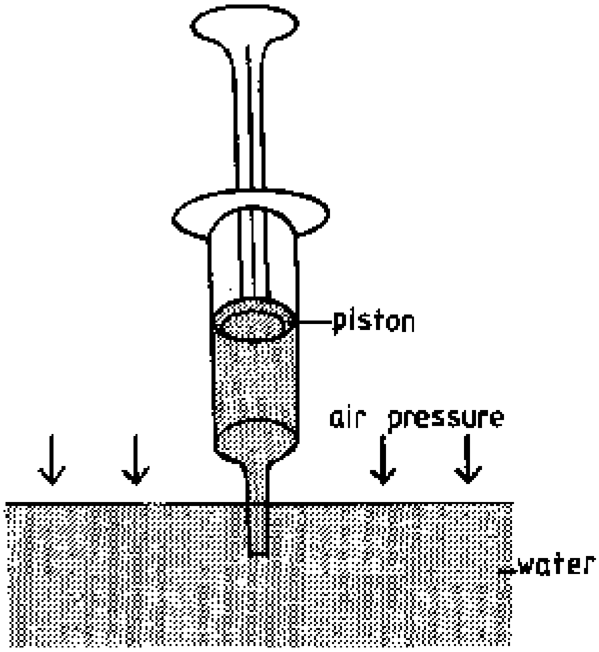

P: Obtain a one-way-syringe from a hospital. Suck water in as shown in the figure.

Q: Why does the water rise in the syringe?

3.7.11 The Bicycle Pump

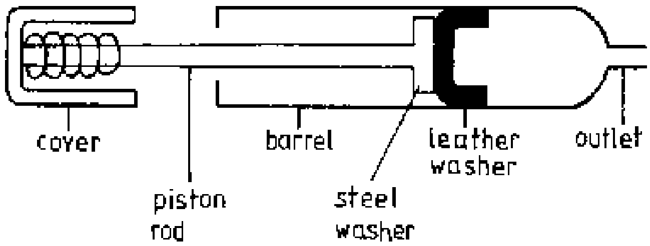

(a)

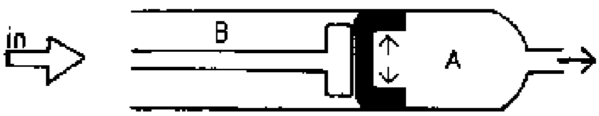

(b)

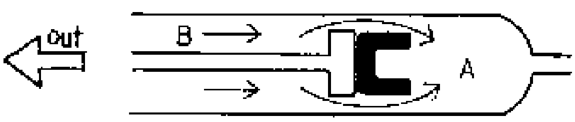

(c)

P: Using a bicycle pump, pump air into a bicycle tyre. Ask students to draw a display chart of the above figure.

Q: Which stroke is easier, the inward or outward one? Why? Explain what happens in these strokes.

O: The outward stroke is easier than the inward.

E: *Inward stroke* (see fig. b): The air in region A will be compressed, and in turn it will press the leather washer against the barrel to make it air tight. Consequently air will be forced into the tube.

Outward stroke (see fig. c): The air in A decreases in pressure. Atmospheric air from B pushes the leather washer inwards and hence enters region A.

3.7.12 The Force Pump

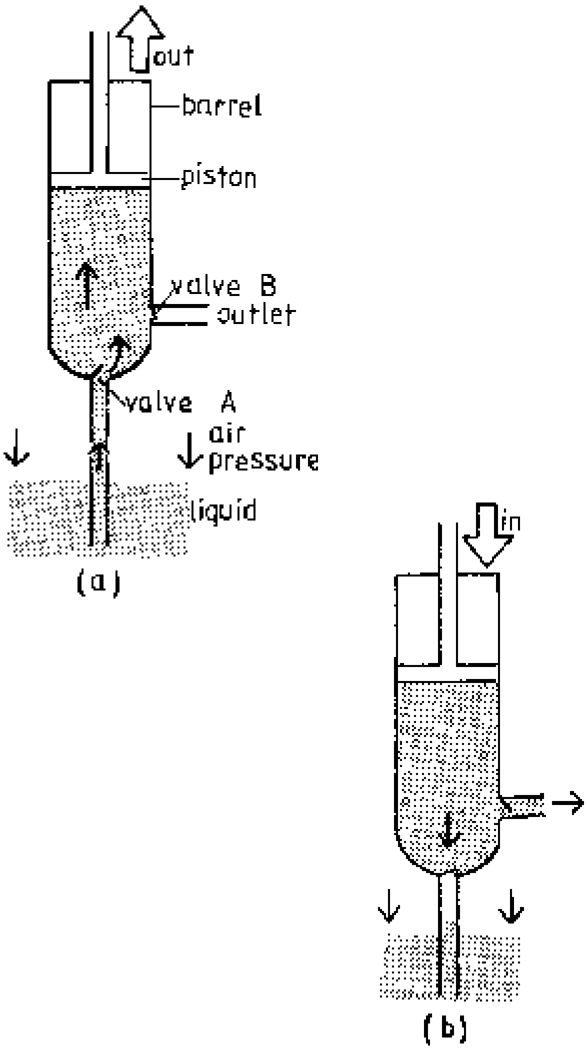

P: Ask students to draw a display chart of the force pump according to the above figure.

Q: Explain how the force pump works using the display chart.

E: *Outward stroke* (see fig. a). When the piston is raised, the liquid pressure in the barrel becomes less than the air pressure. Hence, the air pressure opens valve A and pushes the liquid up into the barrel. It closes valve B.

Inward stroke (see fig. b). When the piston is lowered, valve A closes and valve B opens because of the higher pressure of the liquid in the barrel. Consequently the liquid is forced through valve B to the outlet.

A: Force pumps are used to pump water from shallow wells in villages. Since the air pressure pushes the water up, the maximum depth from which the water can be lifted is less than 10 m

3.7.13 The Lift Pump

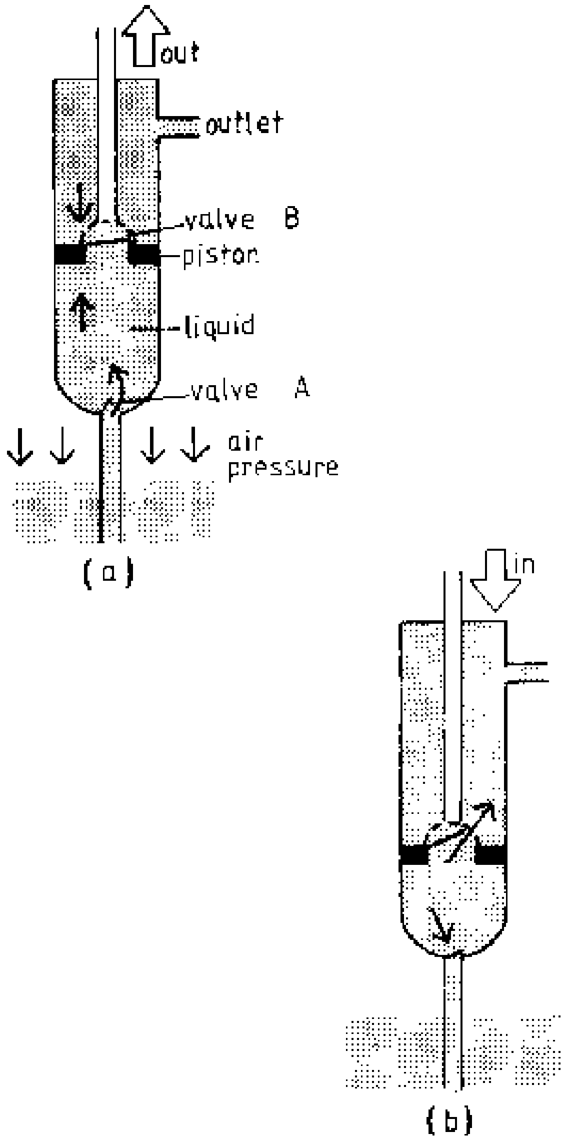

P: Ask the students to draw a display chart of the lift pump (see the above figure).

Q: Explain how the lift pump works using the display chart.

E: *Outward stroke* (see fig. a): The rising piston pushes the water on its upper side out of the outlet since valve B (on the piston) is closed. At the same time the air pressure pushes the water through the open valve A up the barrel.

Inward stroke (see fig. b): When the piston goes down, valve B opens and water flows from below to the top of the piston, while valve A is closed.

A: The lift pump is used to raise liquids from containers, e.g. tanks of kerosene etc.

3.7.14 The Hydraulic Press

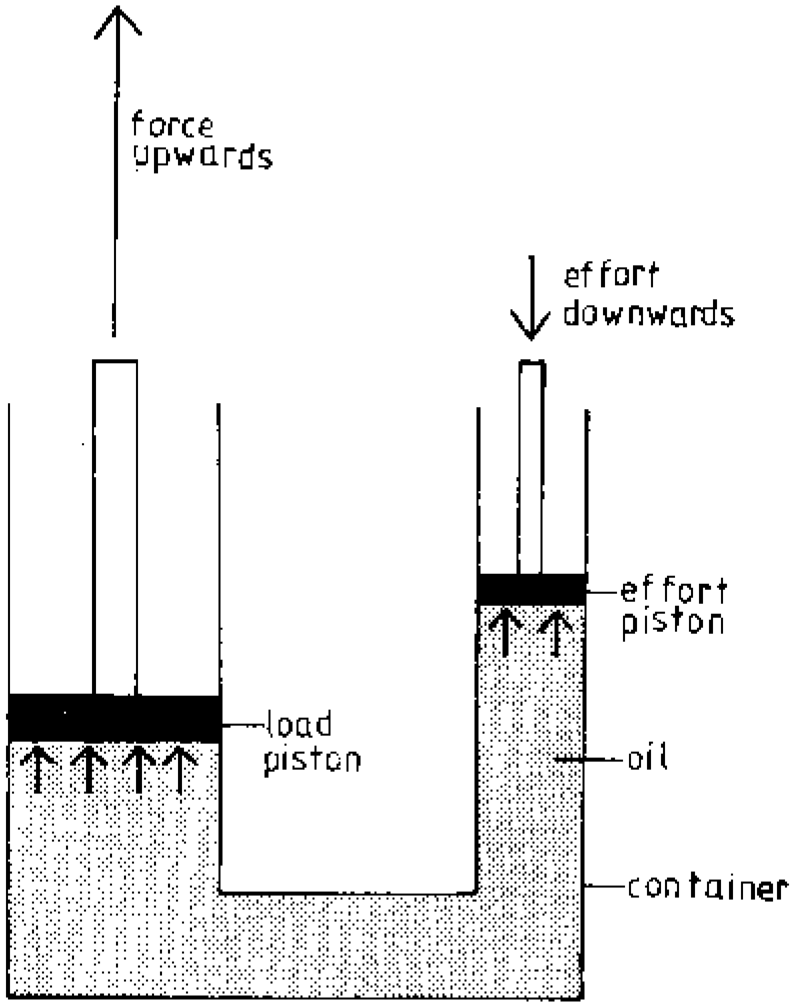

P: Ask the students to draw a display chart of the hydraulic press according to the above figure.

Q: Explain - using the display chart - how the hydraulic press works.

E: A hydraulic press consists of a container which has one end wider than the other. Load and effort pistons are fitted in its ends respectively. Note that the load piston has a larger surface area than the effort piston.

When the effort piston is forced downwards, the pressure of the liquid, e.g. oil, is transmitted equally in all directions in the whole liquid.

Therefore, the pressure at the load piston is the same as that one at the effort piston. Yet, since force = pressure x area and the area of the load piston is greater than that of the effort piston, the force at the load piston is greater than that at the effort piston. Thus, *small effort will raise a big bad.* However, the distance moved by the effort will be larger than that moved by the load.

A: Hydraulic systems are used in brakes, pressing bales of cotton, lifting heavy loads (e.g. vehicles in garages), etc.

3.8 Archimedes' Principle and the Law of Floatation

Archimedes' principle states that the *upthrust* (buoyancy) of a body immersed in a liquid is *equal to the weight of the liquid displaced* by the body. When a body *floats* then *the weight of the liquid displaced is equal to the weight of the body* (Law of floatation).

3.8.1 Upthrust

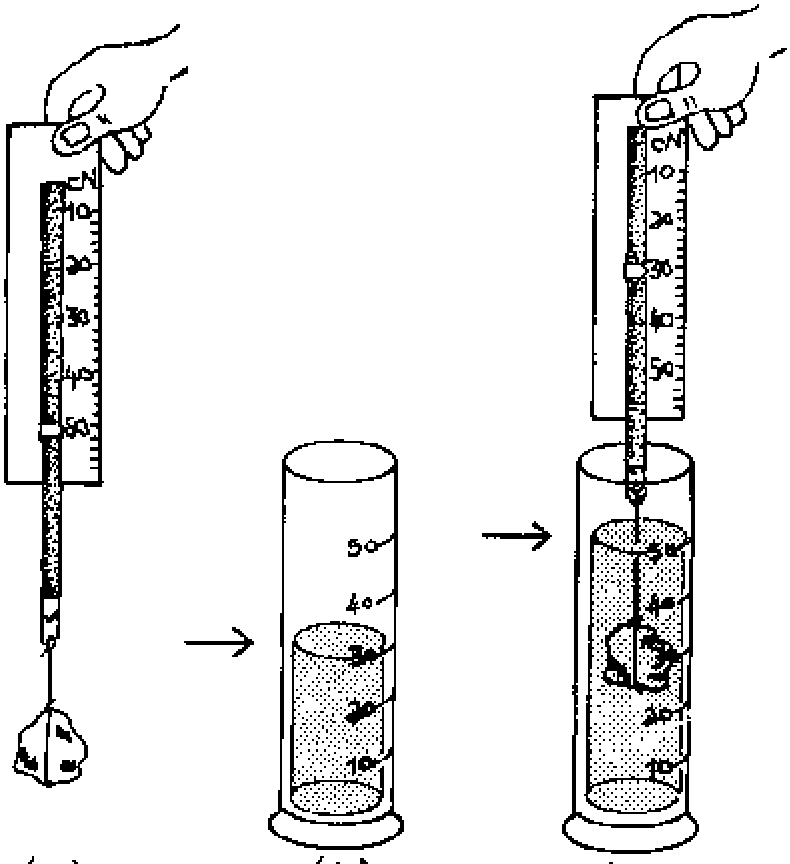

(a) (b) (c)

P: (a) Attach a stone to a thread, and fix it on a Newton balance (see p. 15). Note the weight of the stone.

(b) Fill a measuring cylinder partly with water and record the reading.

(c) Immerse the stone fully into the water (without touching the bottom of the cylinder) and record the reading of the spring balance. Record the reading of the water level too.

Q: How much is the volume of the stone? What is the weight of the water displaced, if 1 cm^3 of water weighs 0.01 N? By how much did the weight of the stone decrease when it was immersed in the water? What can you conclude about the upthrust?

O: For example, let the weight be 0.2 N. You observe that the decrease in weight when the stone is immersed is also 0.2 N, which is equal to the upthrust.

E: Thus, you have verified *Archimedes' principle.*

3.8.2 The Law of Floatation

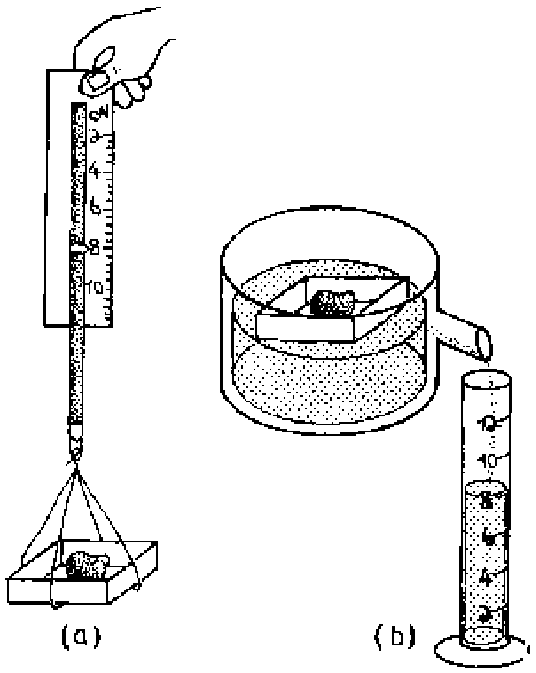

P: Load a matchbox with a small stone so that it still floats in water. Weigh the matchbox and . stone using a Newton balance to obtain its weight (see p. 15).

Fill the overflow can (see p.25) with water and allow the matchbox with stone to float on it. Let the overflow run into a measuring cylinder. From the volume of the overflow find its weight.

O: For example, the weight of stone and matchbox be 0.08 N. Then you will observe that the weight of the overflow will also be 0.08 N.

E: Thus, you have verified the *law of floatation.*

3.8.3 The Cartesian Diver

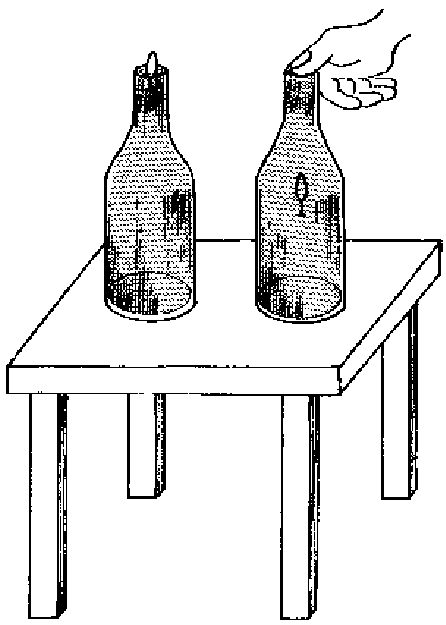

P: Fill a bottle to the rim with water. Load a small piece of styrofoam with a small nail so that it just floats in the bottle. This is the "diver". Close the bottle with your thumb airtight and apply pressure.

Q: What do you observe? Why?

O: According to the pressure exerted by your thumb, the diver will sink or rise.

E: Styrofoam has very many tiny pores which are full of air. Thus, when the pressure of the water increases, the air is compressed, its volume decreases, but its mass remains constant Hence, its density increases, the diver sinks.

When the pressure is released, the air expands, its density decreases, the diver rises.

H: Do not allow the diver to stay for a long time in the water. Always remove it immediately from the water when your experiment is finished. Otherwise it will suck in water (since the styrofoam contains capillaries; see exp. 4.4.6, page 51) and sink even without the application of pressure.

3.8.4 The Hydrometer

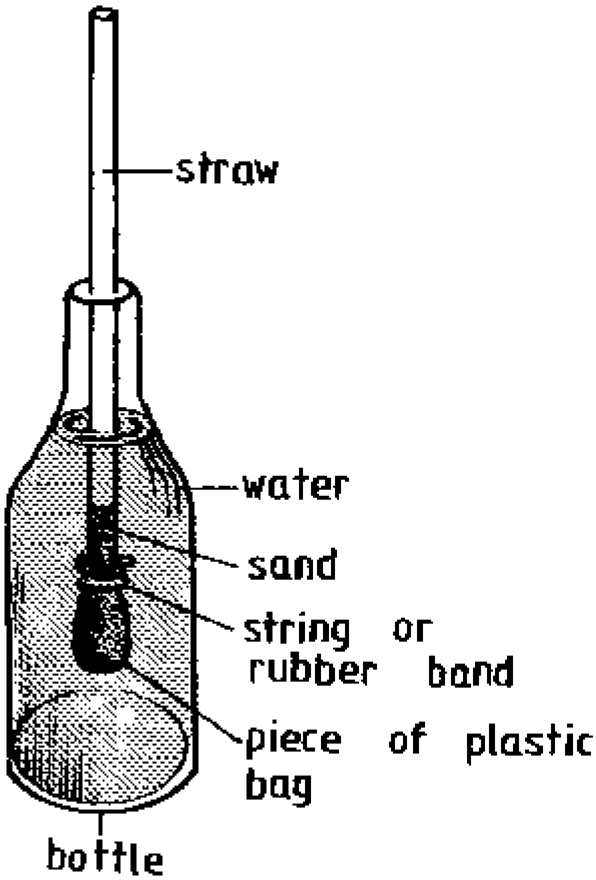

P: Prepare a hydrometer by using a drinking straw. Close one end of the straw by wrapping it with a piece of a plastic bag water-tight using a rubber band or a thread.

Fill clean sand into it until it floats in a vertical position in fresh water. Mark the water level on the straw. Label it 1.0 (since water has a density of 1.0 g/cm^3). Take the distance of this mark from the bottom of the straw to be x cm. Now you may put marks for liquids with other densities by calculating their distance 1 cm from the bottom of the straw by using the formula:

$$1 = x \div (\text{density of liquid})$$

For example, if x = 9.4 cm, you calculate the position of the mark for a density of 0.9 g/cm^3:

$$1 = 9.4 \text{ cm} \div 0.9 = 10.4 \text{ cm}$$

i.e. you place the 0.9g/cm^3 mark at the distance of 10.4 cm from the bottom of the straw, and so on. Place marks from 0.6 to 1.2 g/cm^3.

H: You might have to compress the sand at the bottom of the straw using a stick (or put a nail inside) in order to make it float vertically.

A: Use the hydrometer to measure the density of e.g. kerosene, sea water and pure milk. Thus you can discover the wateringdown of milk by measuring its density using the hydrometer.

3.8.5 An Egg in Water

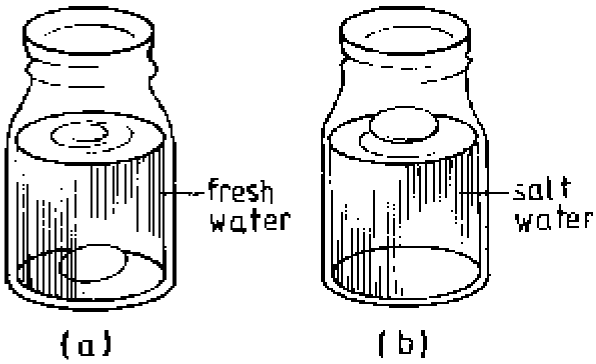

P: Place a fresh egg in water. Observe. Now dissolve salt in the water while stirring until the egg floats.

Q: Why does the egg float in the salt water?

E: The density of salt water is higher than that of fresh water. Thus, the weight of the displaced salt water becomes equal to the weight of the egg. Hence, the egg floats in salt water of a sufficient salt content.

3.8.6 The Floating Candle

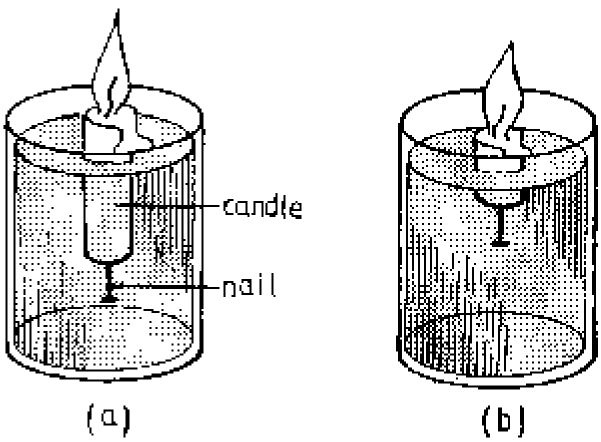

P: Put a nail into the bottom end of a candle so that the candle just floats with its top a bit above the surface of the water.

Light the candle and watch it as it burns up.

Q: Why does the candle continue to float even though it constantly loses weight as it burns up?

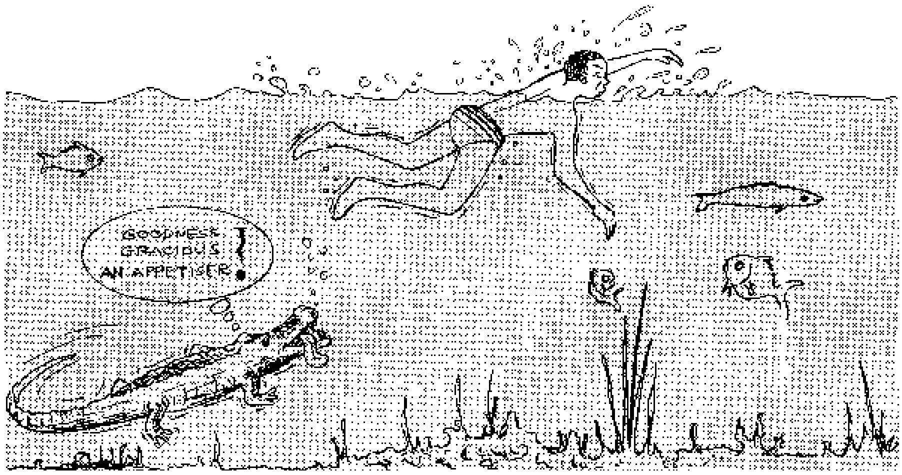

3.9 Work, Energy and Power

To pull a heavy cart is tiring work. In physics *work* is defined as follows:

Work done = force x distance moved in the direction of the force.

Unit: 1 N x m = 1 J (joule)

Energy is the ability of doing work. Hence, its unit is also 1J.

Power is the rate of doing work, i.e. work per unit time. Its unit is 1 joule/second = 1 watt (1 W)

3.9.1 Work Done by Lifting

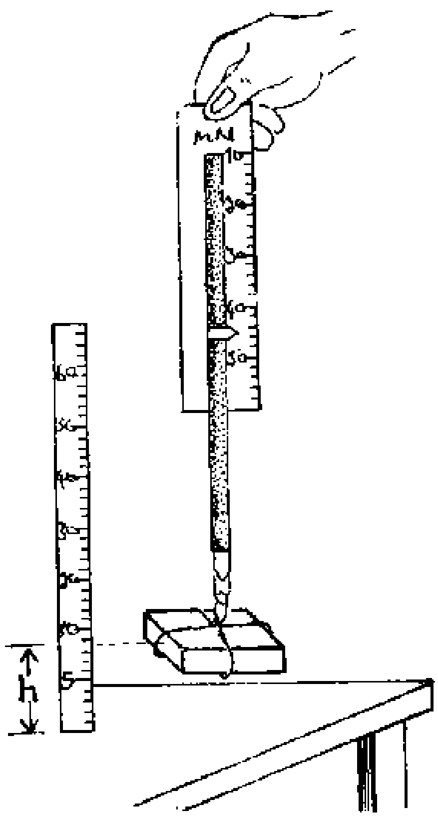

P: Raise a block of wood from the table using a Newton balance (see p. 15). Read the balance when you lift the block at *constant* velocity, not when starting or stopping. Compare this force with the weight of the block. Measure the vertical distance the block is raised.

Q: Calculate the work done when the block was raised by the vertical distance h.

E: The force which lifts the block at constant velocity is equal to its weight in magnitude but has the opposite direction. Thus, the *work done by lifting* is

Work done = weight x vertical distance

3.9.2 Work Done by Friction

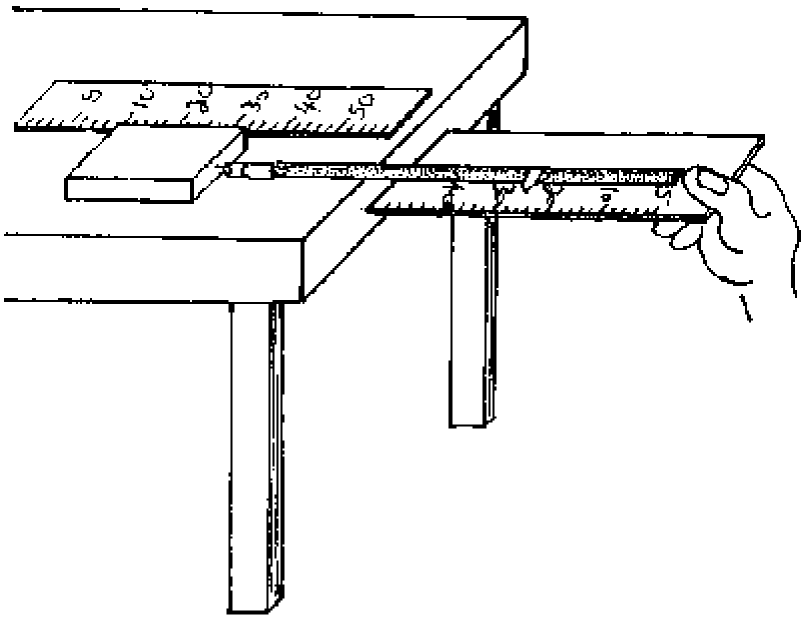

P: Place a block of wood on a table. Pull it with constant velocity using a Newton balance. Measure the distance moved by the block.

Q: Calculate the work done from the reading of the balance and the distance measured.

E: The force which pulls the block at constant velocity is equal to the force of friction in magnitude but has the opposite direction. Thus, the *work done by friction* is

Work done = force of friction x distance moved

3.9.3 A Catapult

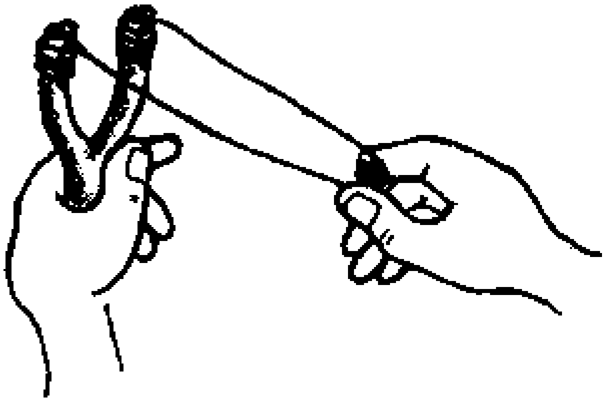

P: Tie a rubber band to the ends of a branched stick. Place a stone in the middle of the rubber band and stretch the band by pulling the stone towards you. Then release it.

H: Be very careful that nobody will be hit by the stone!

Q: What do you observe?

What kind of energy does the stretched rubber band, what the flying stone possess?

3.9.4 The Principle of a Steam Engine

P: Fill some water into an opened electric bulb (see appendix) and close it *slightly* by a stopper. Then holding it with a strip of paper heat it using e.g. a kerosene burner until the water boils.

Q: What happens to the stopper? What energy changes take place?

3.9.5 A Pendulum

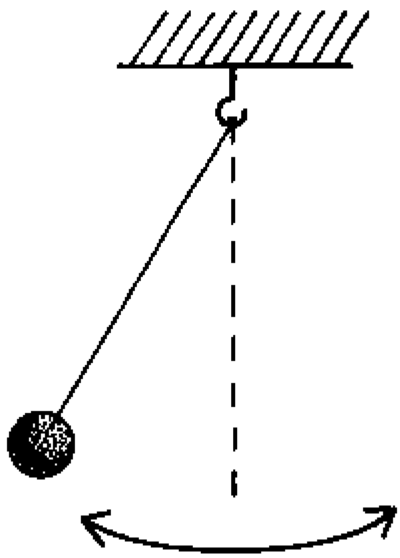

P: Suspend a stone on a long string. Displace it sidewards.

Q: What do you observe? What changes in energy take place?

E: When the pendulum is displaced sidewards by your hand, *chemical energy* of your food is changed into *potential energy* of the pendulum. When the pendulum swings back, it converts the latter into *kinetic energy* which is changed again into *potential energy* on the other side of the oscillation and so on.

3.9.6 Potential Energy in a Clothes-Peg

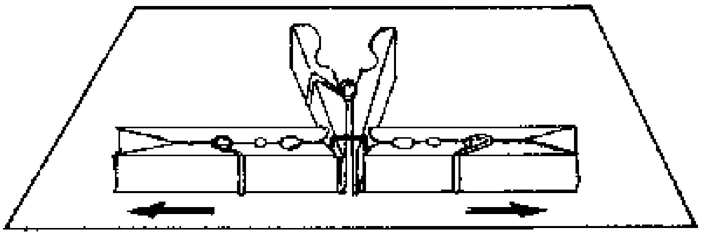

P: Tie the handles of a spring clothes-peg together with *one* loop of thread. Place this peg at the middle of a smooth table and place two other pegs beside it, one against each end of each handle. Bum the thread.

Q: What do you observe? What changes in energy take place?

3.9.7 Energy and the Funny Jumper

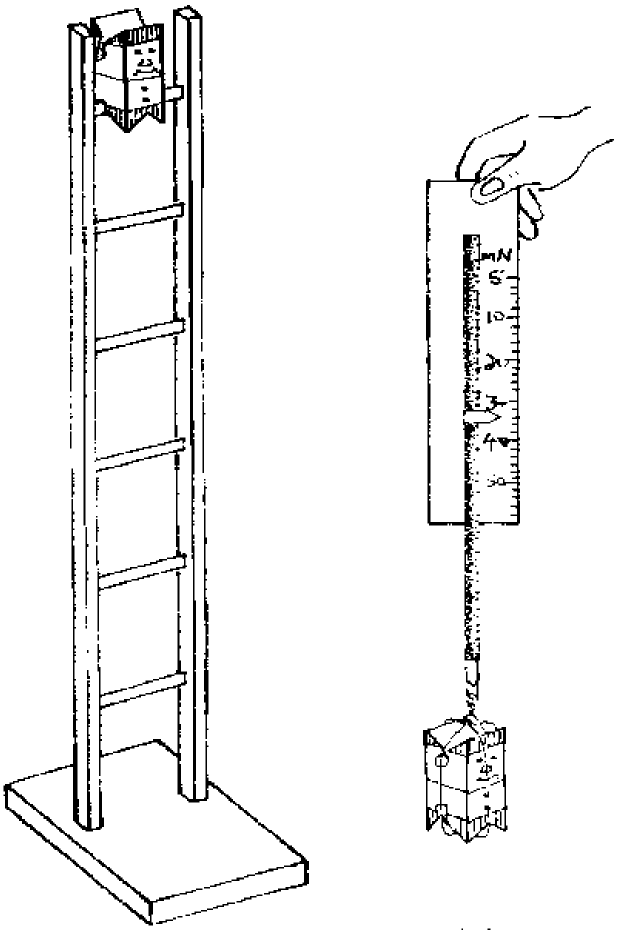

(a) (b)

P: Set up the funny jumper (see p.21). Weigh the jumper using a Newton balance.

Q: Calculate the potential energy of the jumper when it is on the uppermost step of the ladder. Where does this energy go when it jumps down step by step?

E: The *potential energy* of the jumper is equal to its weight times the height of the uppermost step above ground. As the jumper jumps down, this energy is converted into *kinetic energy* (energy of motion) which in turn is converted into *heat* by friction.

3.9.8 Power

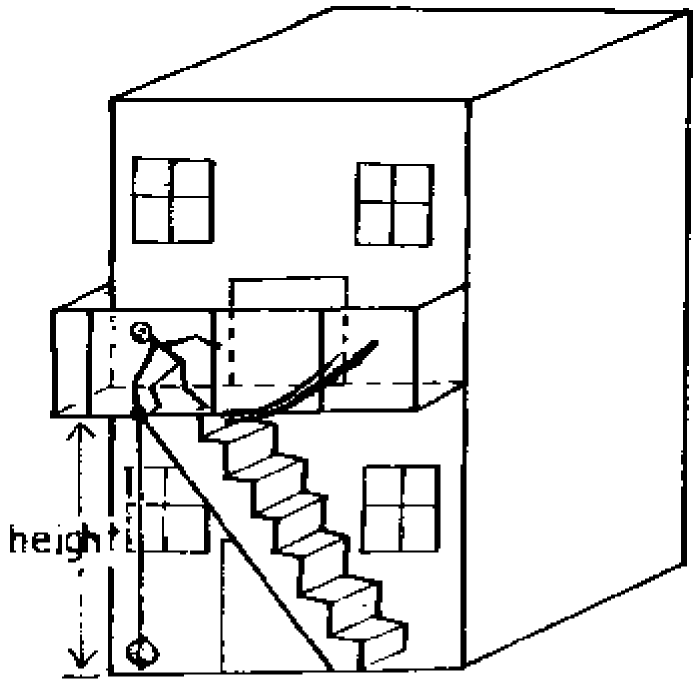

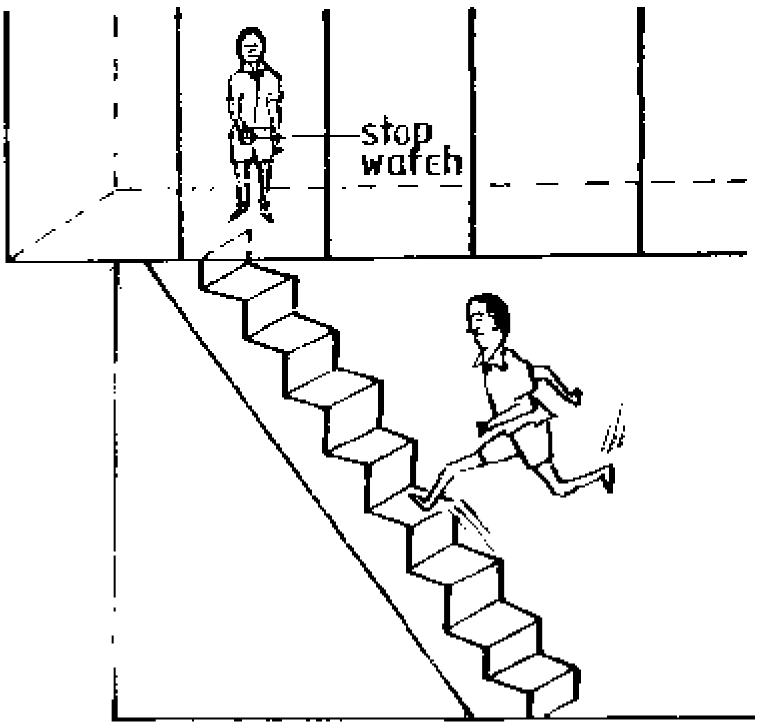

P: Measure the vertical height above ground of the first floor of a storey building. Run up to that floor as fast as you can while your friend times you with a watch. Take your weight (probably in a hospital).

Q: Calculate your maximum power.

E: Using your weight and the height of the first floor above ground, first calculate the potential energy (PE) of your body when it is on the first floor:

PE = weight x height

This is the energy which you had to give out in order to raise your body to that height.

Now calculate your power by dividing that energy by the time (in seconds) you needed for running up.

3.10 Simple Machines

Simple machines use the principles of Physics to give us mechanical advantage, e.g. to *lift a heavy load using a small effort.* Examples are levers, wheel and axle, pulleys, the inclined plane etc.

Mechanical advantage (MA) = load ÷ effort. It depends on friction.

Velocity ratio (VR) = distance moved by effort ÷ distance moved by load. It does not depend on friction.

Efficiency = output ÷ input - work done on the load ÷ work done by the effort = MA ÷ VR. It depends on friction.

3.10.1 Levers

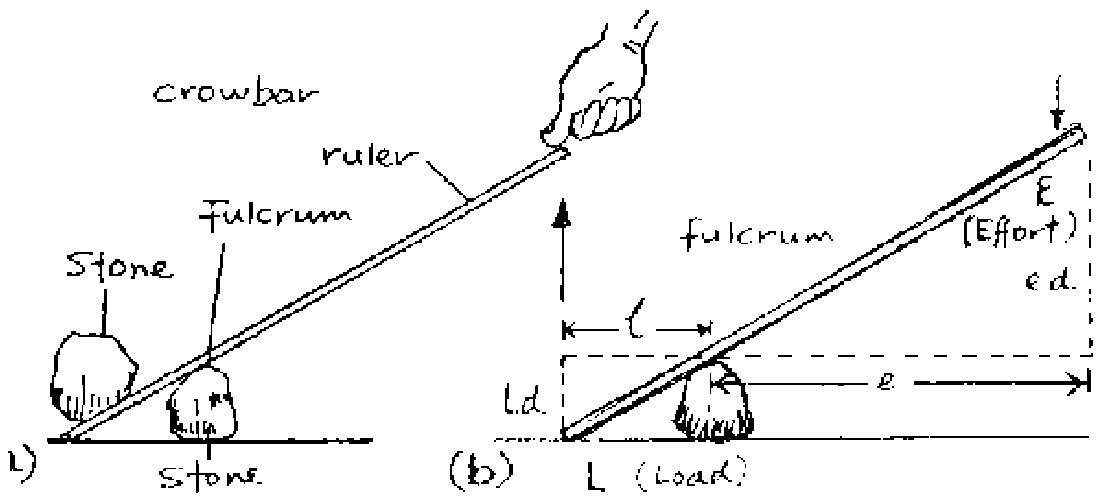

P: Make a lever using your ruler and a tipped stone. Use it to lift a heavy stone or brick.

Q: Do you feel the mechanical advantage? Derive a simple formula for MA (assuming there is no friction) using moments of forces (see p.20).

O: The effort is less than the load but the distance moved by the effort (d.e.) is longer than the distance moved by the load (d.l.).

E: Taking moments of forces (see fig. b) we obtain (neglecting friction):

$$L \times 1 = E \times e$$

A:

$$\frac{L}{E} = \frac{e}{l}$$

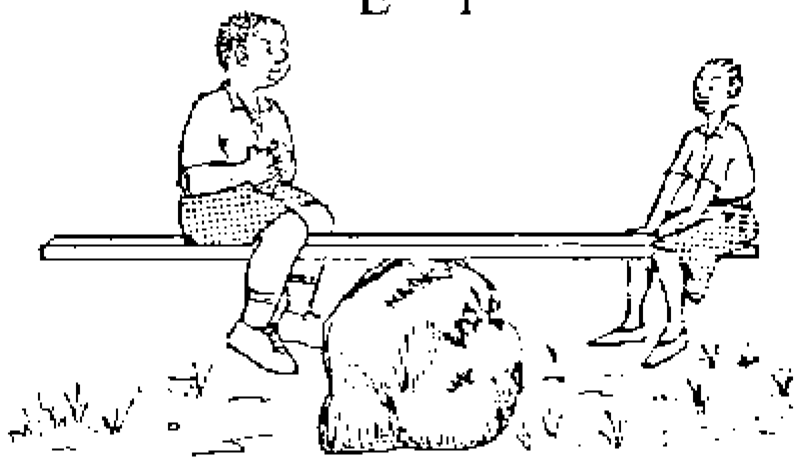

The seesaw, pliers, the wheelbarrow, tweezers, the bottle opener, the forearm, the roman steelyard, etc. are all levers.

3.10.2 The Roman Steelyard

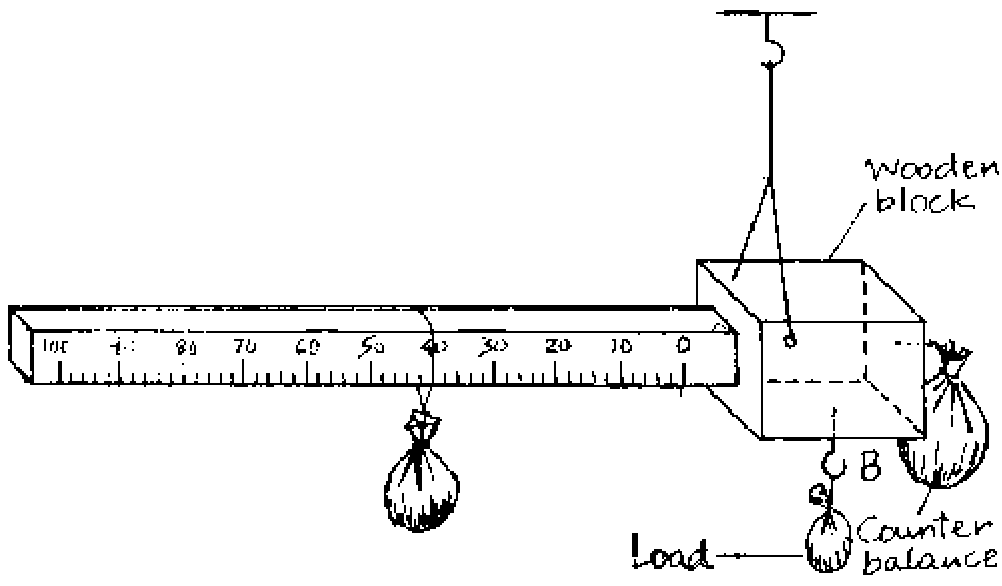

P: Make a roman steelyard according to the figure using wood.

Calibration: Suspend the roman steelyard in air. Then suspend e.g. a 100 g mass on the assumed zero mark. Hang a counterbalance mass on the other side (as shown) so that the whole system balances horizontally. Then hang a standard mass, e.g. 50 g on B and adjust the 100 g along the rod so that the whole system balances horizontally. Mark this point for the standard mass used (e.g. 50 g). Repeat this procedure for other masses (e.g. 100, 150, 200 g, ...).

How to measure an unknown mass (load): Suspend the load (whose mass you want to determine) from B. Then adjust the 100 g mass along the beam so that the whole system balances horizontally. Read and record the mass of load.

H: The whole system should be suspended freely in air and it must be balanced *horizontally* in each step.

A: Used in weighing cotton, bags of coffee etc.

3.10.3 The Single Pulley

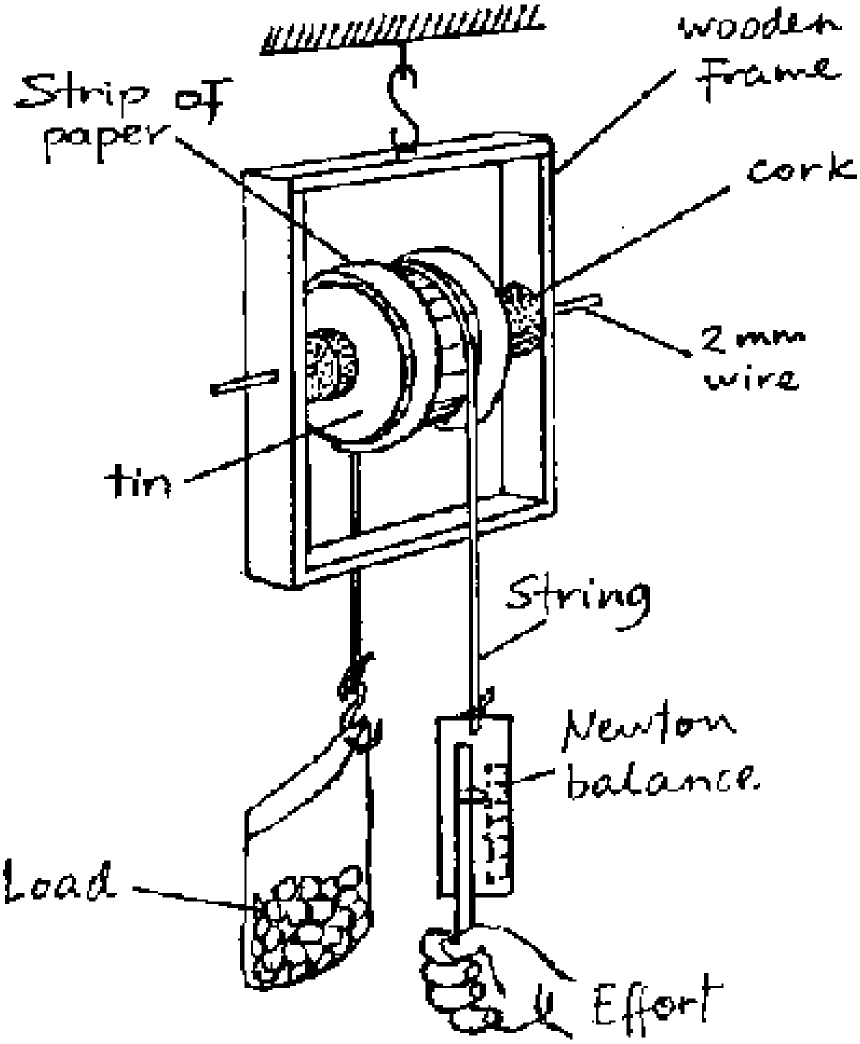

P: Produce a pulley by boring holes in the centre of the top and the bottom of a small tin. Take a wire of 2 mm diameter as an axle and fix it in a wooden frame as shown in the figure. Attach strings and use it to lift a load (which should be much heavier than the pulley). Use a Newton balance to measure load and effort.

Q: What is the MA of the simple pulley? What is the advantage of it?

E: A single pulley has an MA of 1, i.e. the effort is as big as the load is (including friction it is even bigger). Yet, the advantage is that the pulley *changes the direction* of the force. You can easier lift a heavy load by pulling downwards (assisted by your weight) than by pulling upwards.

3.10.4 The Two Pulley System

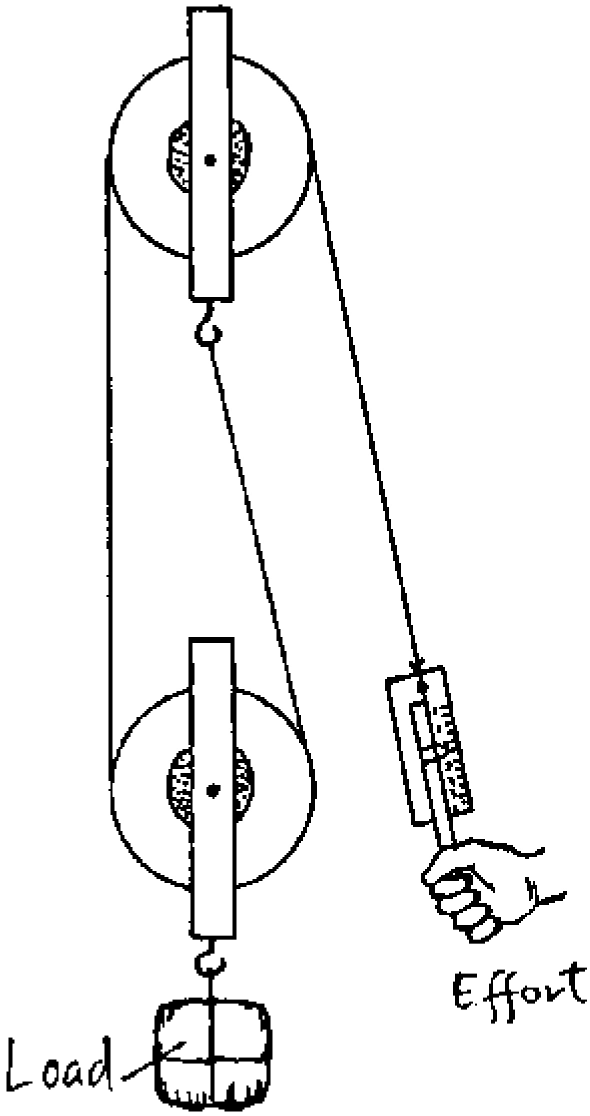

The two pulley system is the simplest *block and tackle* which gives a real MA when used to lift heavy loads.

P: Connect two single pulleys as shown in the above figure. Use this system to lift the same load as in experiment 3.10.3. Measure the effort using a Newton balance.

Q: What do you feel when lifting the load directly and when using this pulley system? How is the MA now (if you neglect friction and the weight of the lower pulley)? How far does the effort move, when the load moves, e.g. a distance of 20 cm?

O: It is easier to lift the load using this system: the effort is smaller.

E: Neglecting friction and the weight of the lower pulley, the MA will be 2, i.e. the load is twice the effort. However, in practice it is less due to the factors mentioned.

The effort moves 40 cm when the load moves 20 cm.

A: Cranes (e.g. in harbours) use (even more complex) pulley systems to lift very heavy loads.

3.10.5 A Riddle

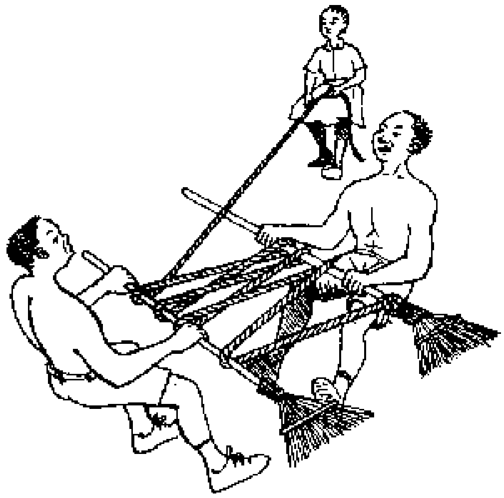

P: Ask two strong boys and a girl to take two (broom) sticks and a rope and to arrange themselves as shown in the figure.

Q: Will the girl be able to pull the two strong boys together or can the boys resist the pull of the girl?

O: The girl wins. Why?

E: This is an arrangement of "broomstick pulleys". Thus, the girl needs much less effort to pull the heavy loads of the two boys! However, the girl will have to move farther than the boys do.

3.10.6 The Inclined Plane

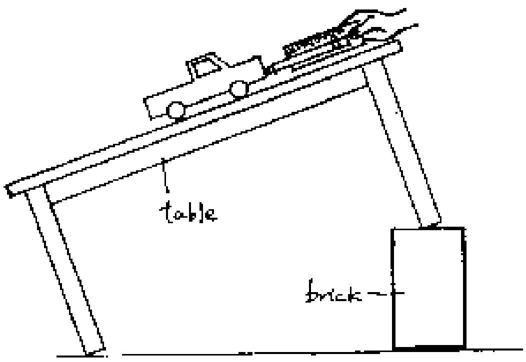

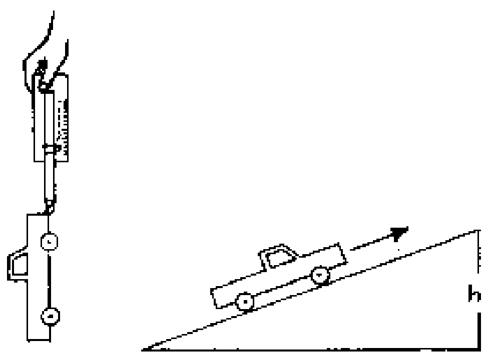

P: Tilt a smooth table by placing bricks underneath its legs on one end of the table (see fig. a). Ask students to bring their toy cars.

Weigh a toy car using a Newton balance. Now pull this toy car up the inclined plane of the table using a Newton balance to measure the effort.

Q: Is the effort smaller than the load (weight of the toy car)? How is the velocity ratio = (distance moved by effort along the slope) ÷ (distance moved by the load *vertically*)?

E: The effort is smaller than the load. The MA depends on the inclination of the plane as does the VR which is greater than 1.

A: Hills, slopes and ramps are examples of inclined planes, screws apply the same principle. The Egyptians used inclined planes do build their pyramids as people do sometimes nowadays to carry the building materials when building a two or three storey house.

3.11 Astronomy - The Solar System

Astronomy is the study of bodies in the universe and of their motion, e.g. the study of the solar system. The sun has nine planets going around it. The planets differ in size and relative distances from the sun. They are kept in their almost circular paths by the *gravitational force* of the sun which acts as *centripetal force.*

3.11.1 Model of Sun-Earth-Moon

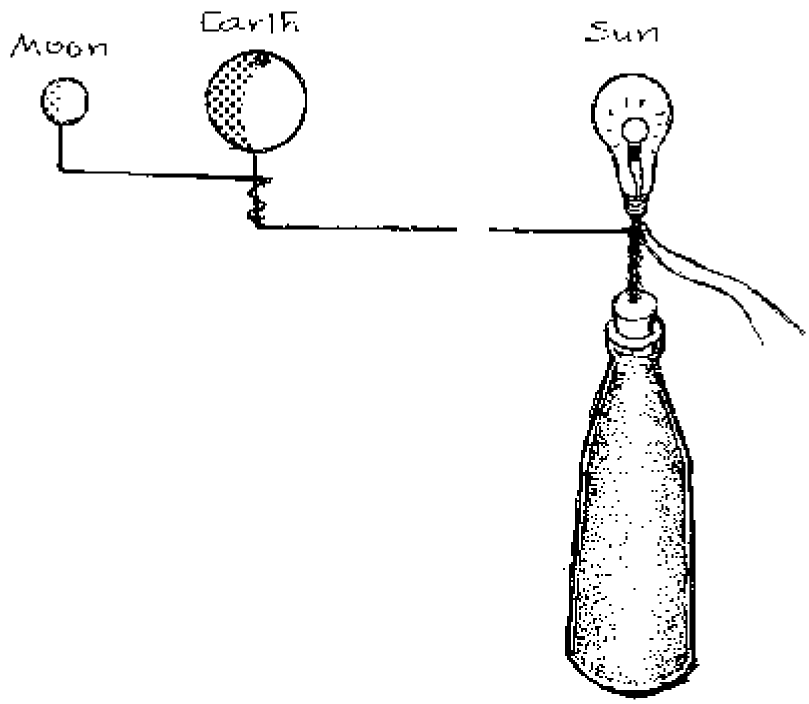

P: Pierce a seed and a small fruit with wires. Join an opened bulb (see appendix) to a bottle filled with sand using a wire. Join the three wires so that they allow rotation. The seed, fruit and bulb represent moon, earth and sun respectively. The bulb may be lit using a torch bulb and battery.

E: The model can be used to show the movement of the earth and the moon around the sun and earth respectively. It can also show the eclipse of the moon and the sun, when the earth shades the moon or the moon shades a part of the earth respectively.

3.11.2 Centripetal Force

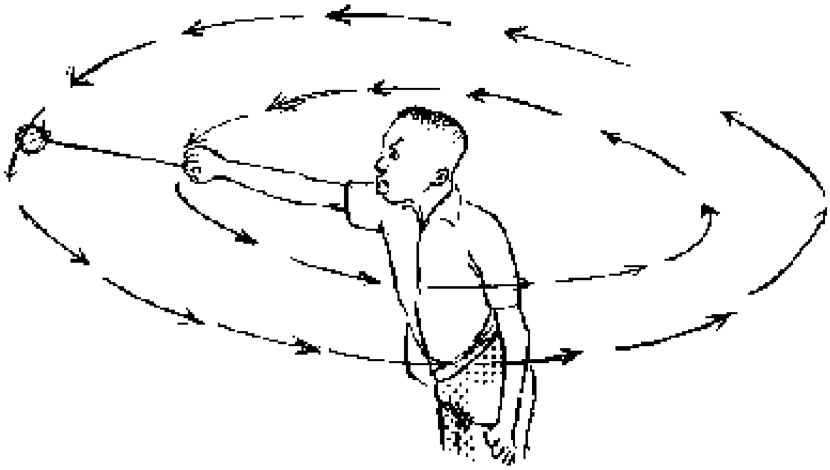

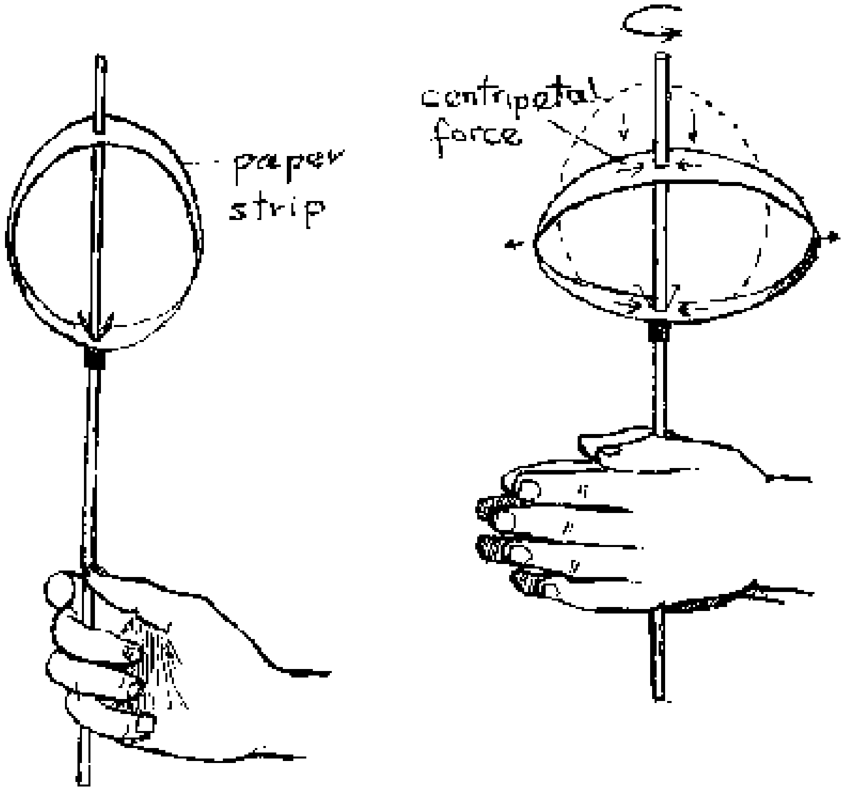

Due to its inertia a body will move along a straight line when *no* force acts on it. What force keeps the planets on their circular paths?

P: Tie a ball or stone to a thread and whirl it around as shown in the above figure.

Q: What force keeps the stone on its circular track?

E: There acts a force along the thread (which you feel in your hand) called the *centripetal force* which forces the stone to the circular path. Thus, a centripetal force must also act on each planet to keep it on its circular path.

3.11.3 Demonstrating the Solar System

P: Place a chair at the centre of the football field of your school to represent the sun. Now ask nine students to go around the chair in circles to represent the planets. The radius of each circle should correspond to the distance of the respective planet from the sun.

For example, if you use a scale of 1 cm representing a distance of 1 million km from the sun, then (see the table below) the radius of the mercury path must be 58 cm, that of the venus 107 cm, that of the earth 149 cm and so on. (Of course, in this scale, the sun would be a ball of 2 cm diameter, the earth only a grain of sand).

Q: What will be the radii of the paths of Jupiter, Uranus and Pluto respectively in this model?

E: They will be 7.8 m, 28.5 m and 58.7 m respectively.

Planet	Distance in millions of km from sun
Mercury	58
Venus	107
Earth	149
Mars	227
Jupiter	773
Saturn	1418
Uranus	2853
Neptune	4469
Pluto	5866

3.11.4 Gravitational Force

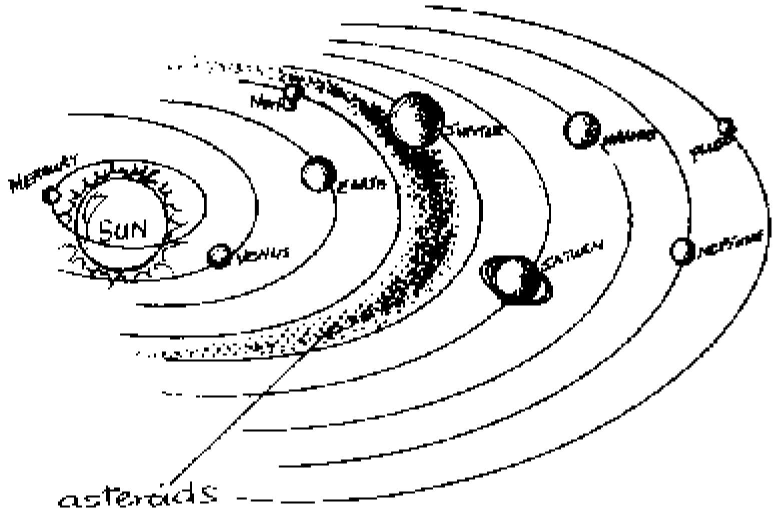

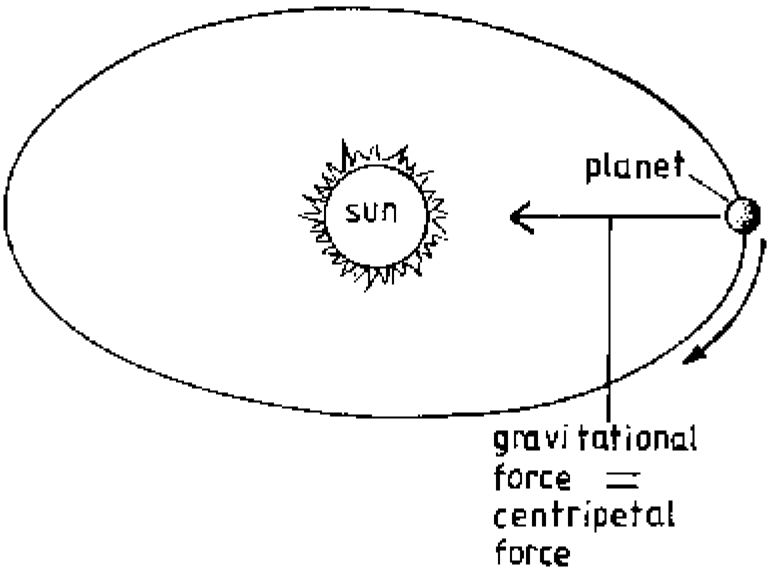

How do we call the force which acts as the centripetal force for the planets? Obviously, the planets are not tied to the sun by a string as the stone in experiment 3.11.2 is tied to your hand.

There must be a force acting through the empty space tying the planets to the sun. This force is the pull of the mass of the sun on the mass of the respective planet. It is a force of attraction between the two masses which we call *gravitational force.* Thus, the gravitational force between the sun and a planet acts as centripetal force (always directed towards the sun) to keep the planet in its circular path. (You can feel the gravitational force of the earth causing the *weight* of a body on the earth. Due to this gravitational pull of the earth, e.g. a stone falls down to the earth where released.)

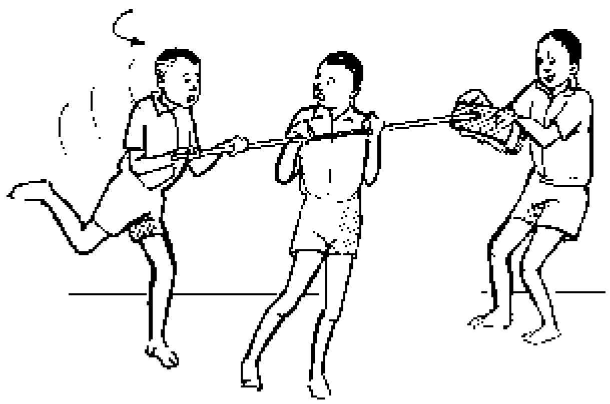

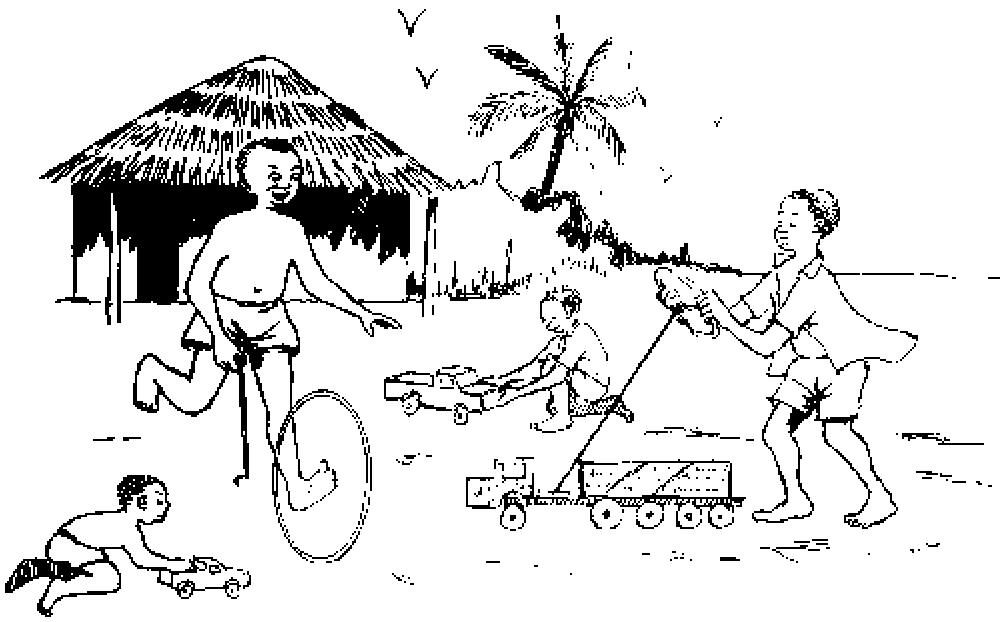

4. Matter

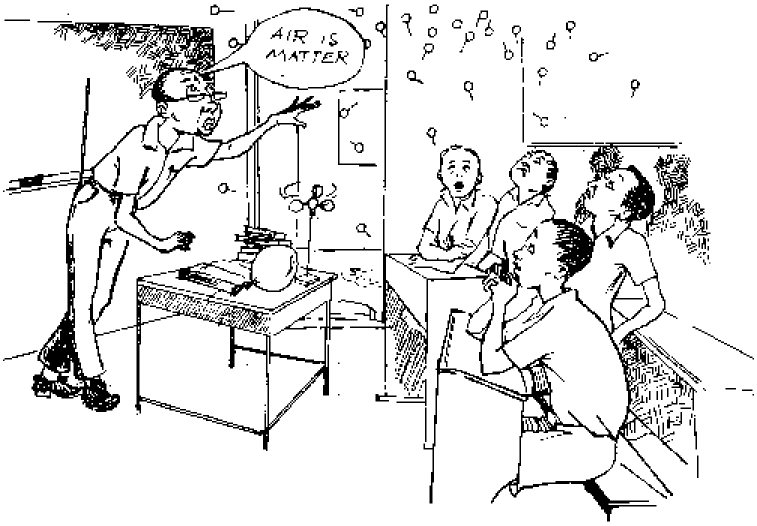

4.1 The Particle Model of Matter

Matter is anything which occupies space and has mass. It consists of very *small* particles called atoms or molecules which take part in chemical reactions. The particles possess kinetic energy. Therefore they are in constant vibration. The energy content increases with the increase in temperature. Hence, the motion of the particles increases with the temperature. Forces exist which hold the particles strongly together in *solids,* while they can easily move past each other in *liquids* and *gases.*

4.1.1 Salt is Made of Particles

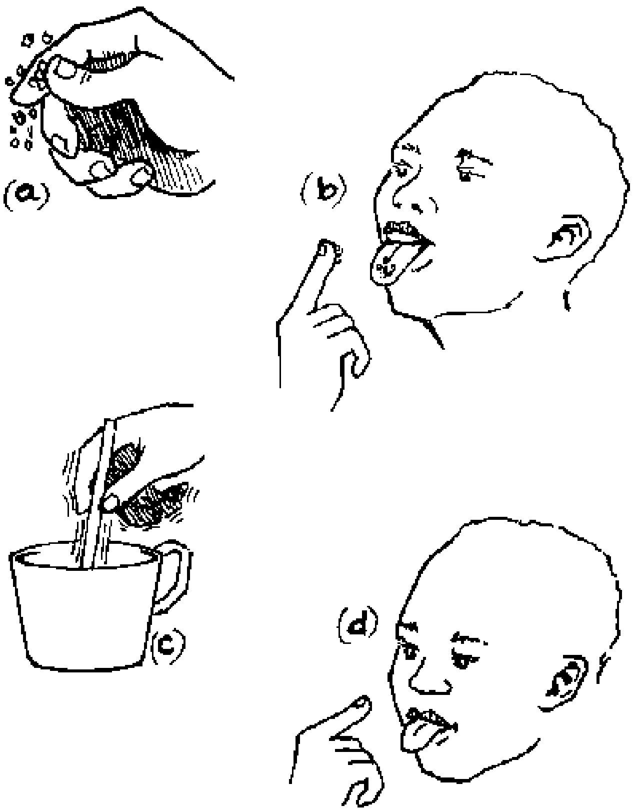

P: Take some salt (or sugar) crystals and roll them between your fingers in order to feel their hardness. Taste the crystals.

Take a small amount of boiled water and taste it.

Put salt (or sugar) crystals into the water and shake. What happens? Taste again.

Q: Describe and explain your observations.

O: Salt crystals are often of cubical shape. They are quite hard.

The crystals dissolve in water. The solution tastes like salt (or sugar).

E: Sugar or salt in water exists as very tiny invisible particles that can be identified by tasting.

4.1.2 Water is Made up of Particles

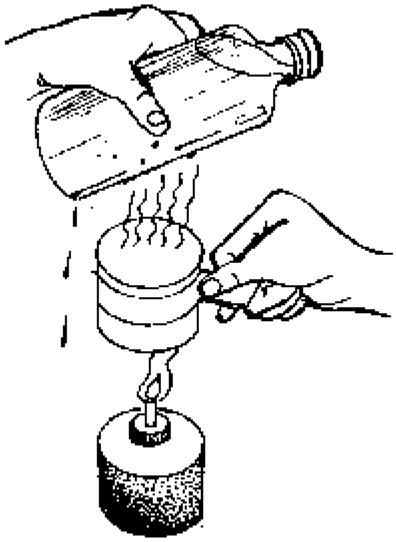

P: Pour a small amount of water into a tin can and heat it until it boils. Fill a bottle with cool water and hold it above the tin can.

Q: What do you observe?

O: Water drops form on the outside of the cool bottle wherever it is touched by the steam of the boiling water.

E: Water particles escape from the boiling water as vapour and condense on the lower surface of the bottle to form water droplets.

The formation of drops from vapour is an indirect evidence that water is made up of small particles.

4.1.3 Size of Particles

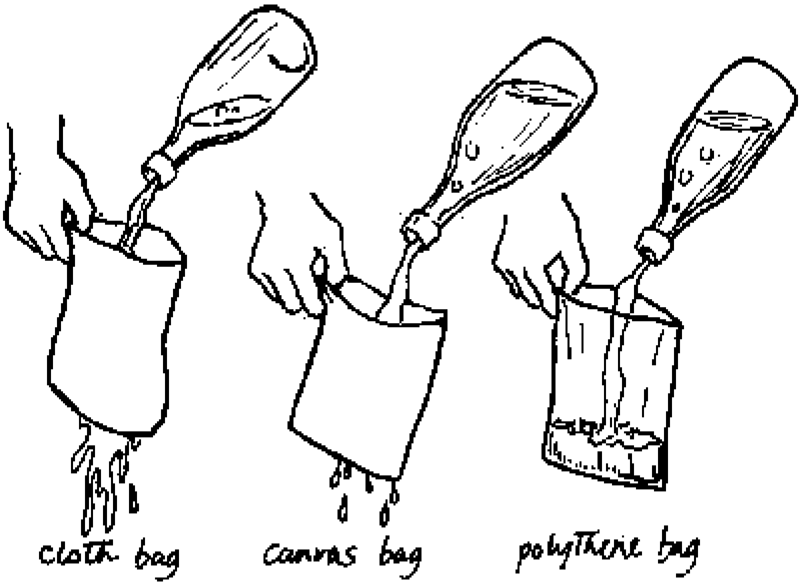

P: Make bags from cotton cloth, canvas cloth and polythene sheet Fill water into the bags.

Q: What do you observe?

E: Water passes through cotton and canvas but not through polythene. This is because polythene has too small pores to allow water particles to pass through.

4.1.4 Feeling Particles

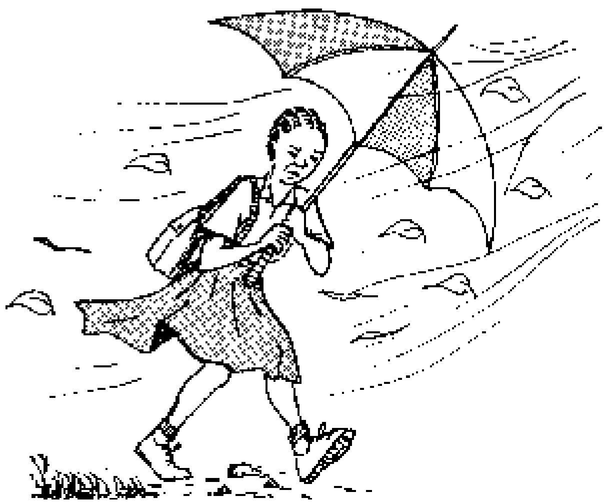

P: A wind is blowing vigorously towards a student carrying an open umbrella.

Q: What will she feel?

E: The umbrella is forced down by the wind pressure. This is due to the current of air particles (wind).

4.1.5 Smelling Particles

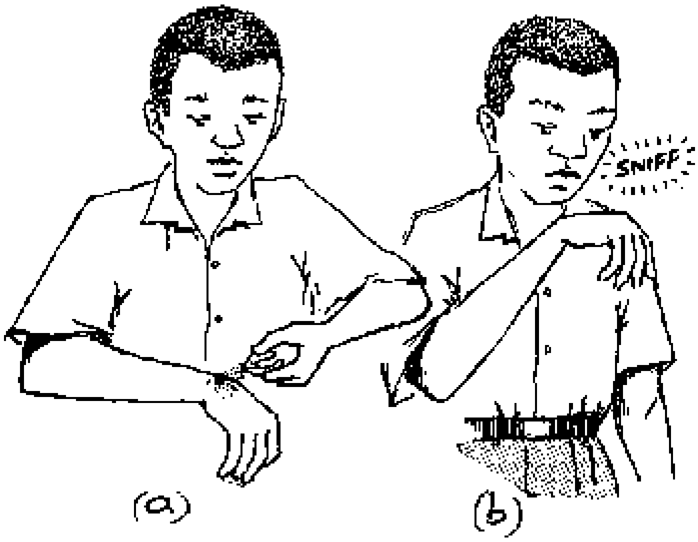

P: Let a student squeeze an orange peel.

Q: What can he sense?

E: He smells the orange, because invisibly tiny particles from the orange peel spread by diffusion to his nose.

4.1.6 Weighing Particles

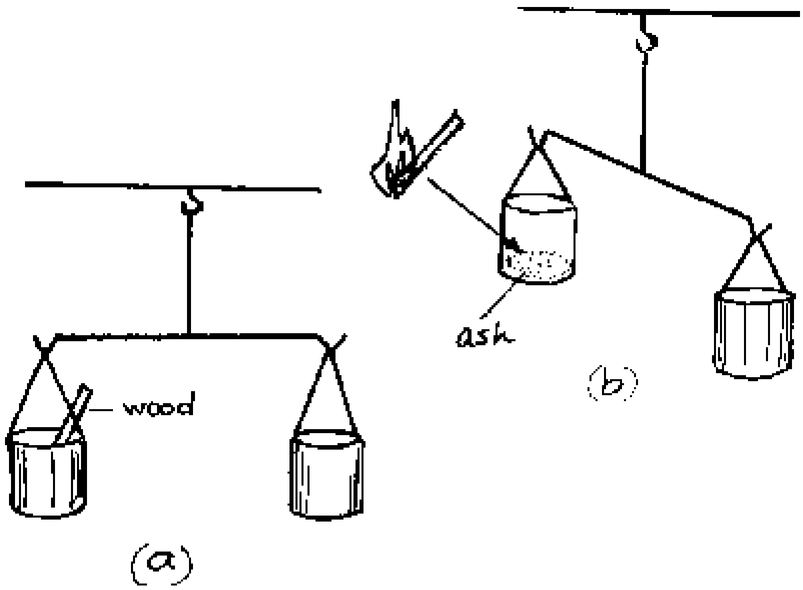

P: Ask students to weigh pieces of wood. Record the weight. Burn the pieces of wood and weigh the ash.

Q: Is there any difference between the weight of the wood and the ash?

E: The weight of ash is less than that of wood. The loss in weight is due to particles which escaped as soot and gas.

4.2 States of Matter

Matter exists in three states namely: solid, liquid and gas. The three states can be converted into one another by heating and cooling. In *solids* the particles are very close together and have a definite order. In *liquids* the particles are slightly farther apart than in solids and can move past each other. In *gases* the particles are in fast random motion. The three states differ mainly in the thermal energy each contains and as a consequence in the volume which equal masses of the same substance occupy.

4.2.1 Changes of State

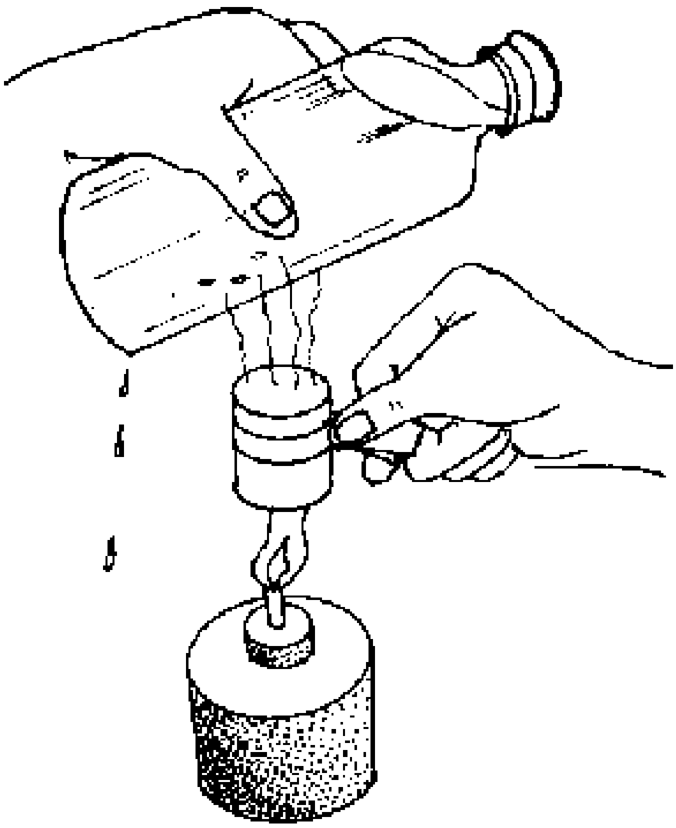

P: Heat pieces of candle wax carefully in a spoon or in a tin and hold a glass filled with cold water above it.

Q: What do you observe?

O: On heating, the solid melts to form a liquid and then by further heating the liquid evaporates as a vapour which is in gaseous state. The gas then condenses at the cold surface. This is similar to experiments performed with water (see 4.1.2, 5.3.1 and 5.3.2).

4.2.2 Explaining the States of Matter

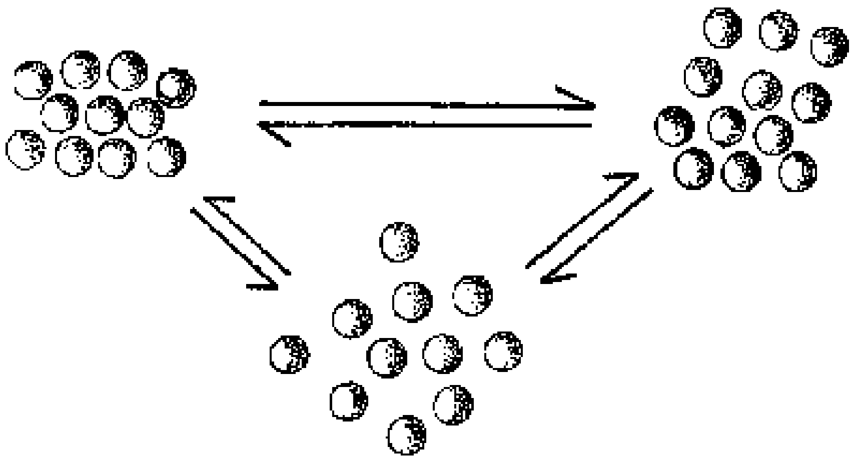

P: The three states of matter can be explained by simple models as shown in the figures above.

Q: What do the pictures represent?

E: Very close pupils or balls represent the particles in the *solid* state. Farther apart pupils or balls represent the particles in the *liquid* state. They move past each other. Fast and randomly moving pupils or balls represent the particles in the *gaseous* state.

4.3 Motion of Particles

Particles are in random motion. However, they cannot be seen. How do we get to know about their motion? The existence of the molecular motion can be deduced by indirect evidence through observation of *diffusion.* The movement of one kind of substance through a volume already occupied by another substance is known as diffusion. More direct evidence for molecular movement in gases or liquids comes from *Brownian movement.* Small visible particles can be seen in an irregular movement. From this we conlude that rapidly moving invisible gas molecules collide with them.

4.3.1 Diffusion in Liquids

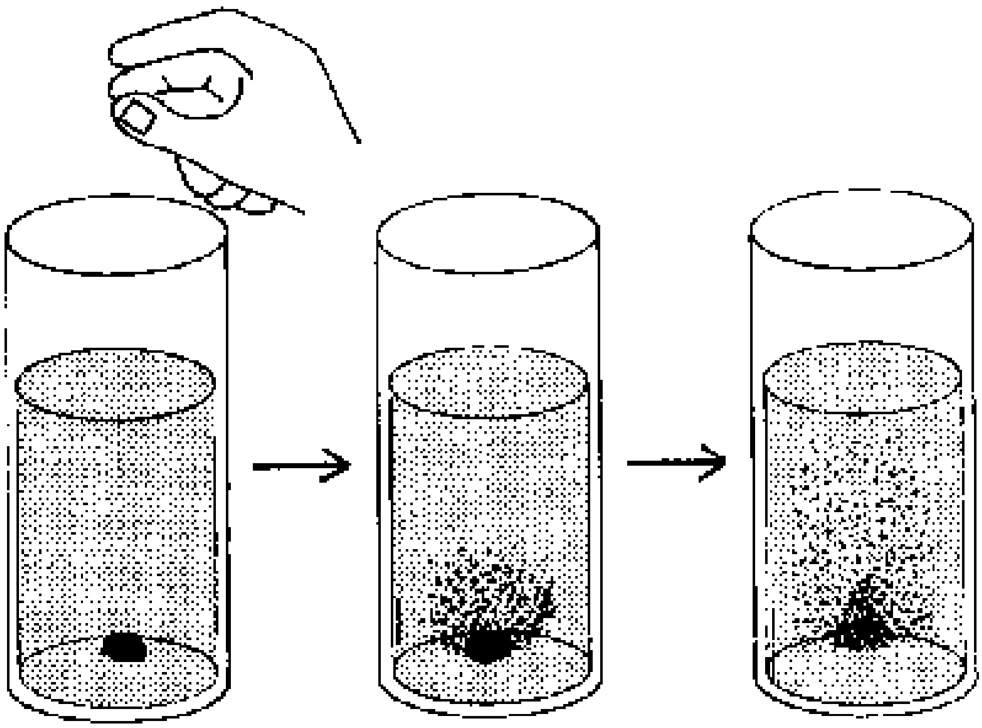

P: Put a crystal of potassium manganate (VII) (permanganate) into a jar containing water. Set the jar and observe.

Q: What do you observe?

O: The purple colour of potassium manganate(VII) (permanganate) will be found to spread gradually throughout the water.

E: This spreading out is due to the motion of the particles of potassium manganate(VII).

This process is called *diffusion.*

H: This is a slow process. Therefore allow the jar to stand for same days.

4.3.2 A Model on Motion

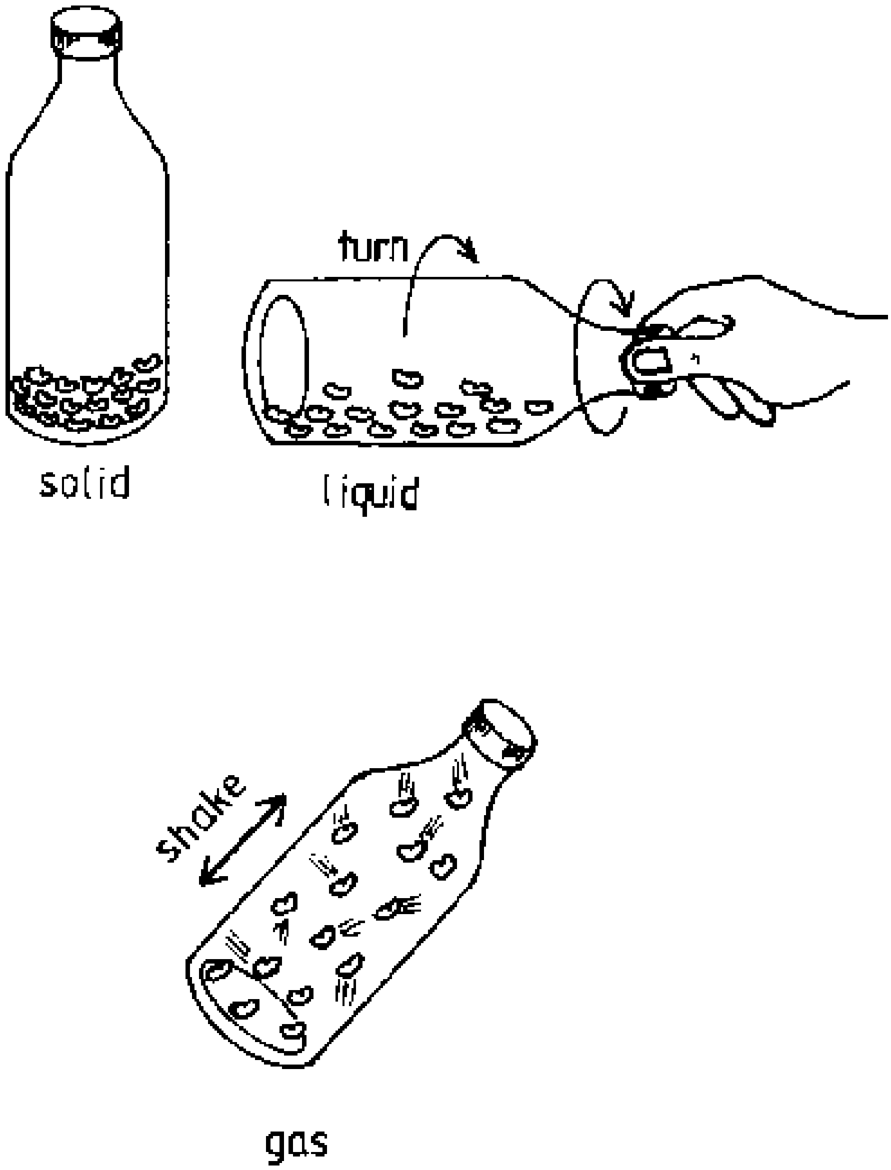

P: Put some dry beans, rice or stones in a transparent bottle. Hold the bottle still (a), then turn it (b). Then shake it vigorously (c).

Q: Which activity corresponds to which state of matter?

E: The movement of particles in *solids* is small and hence the particles are in a fixed order. In *liquids* the particles move past each other and have lost the stiff order. In *gases* the particles move very fast and randomly. They have now no order at all anymore. Hence, the observations in (a), (b) and (c) represent solid, liquid and gaseous state respectively.

4.3.3 Diffusion in Daily Life

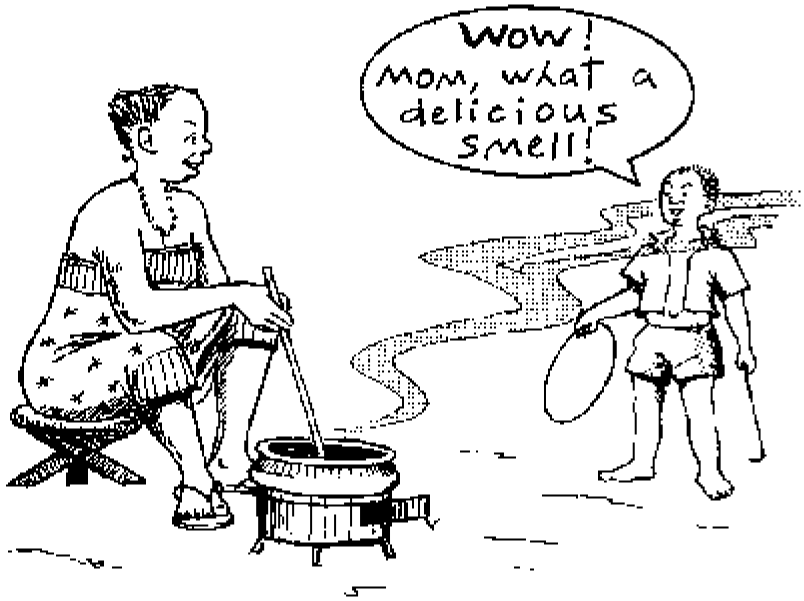

P: Pass near a place where people are roasting meat or cooking.

Q: What do you smell? Why?

E: The smell is sensed even at a distance, because the particles which produce the smell spread by *diffusion.*

4.3.4 Diffusion and Pollution

P: Pass near a polluted area (e.g. latrine, burning heaps of litter, a filling station).

Q: What do you smell?

E: Many hazardeous substances spread to the environment by *diffusion.* (Hazardeous substances in any state of matter in our environment mean *pollution.*)

4.3.5 Brownian Motion

P: Observe a beam of light through dust in a dark room.

Q: What do you observe? Why?

E: The dust particles can be seen moving randomly. This demonstrates *Brownian motion.* What is seen is the consequence of the bombardment of the dust particles by invisible air particles. This is an indirect evidence for the existence of particles in the air.

4.3.6 Model on Brownian Movement

Imagine there would be standing a tall adult person around whom small children are in a continuous random movement. The tall person would be punched permanently by the children and hence would be jerkily moved.

4.4 Cohesion and Adhesion

There are two types of *forces between particles.* Forces between particles of the same material are called *cohesive forces* while those between particles of different materials are called *adhesive forces.* Cohesive forces hold the molecules in a water drop together. Nevertheless they are weak, so that the molecules can be easily separated, for example, when we jump into water or when it is heated. Paints and all kinds of glues are based on the effects of adhesive forces.

4.4.1 Exploring Cohesion and Adhesion

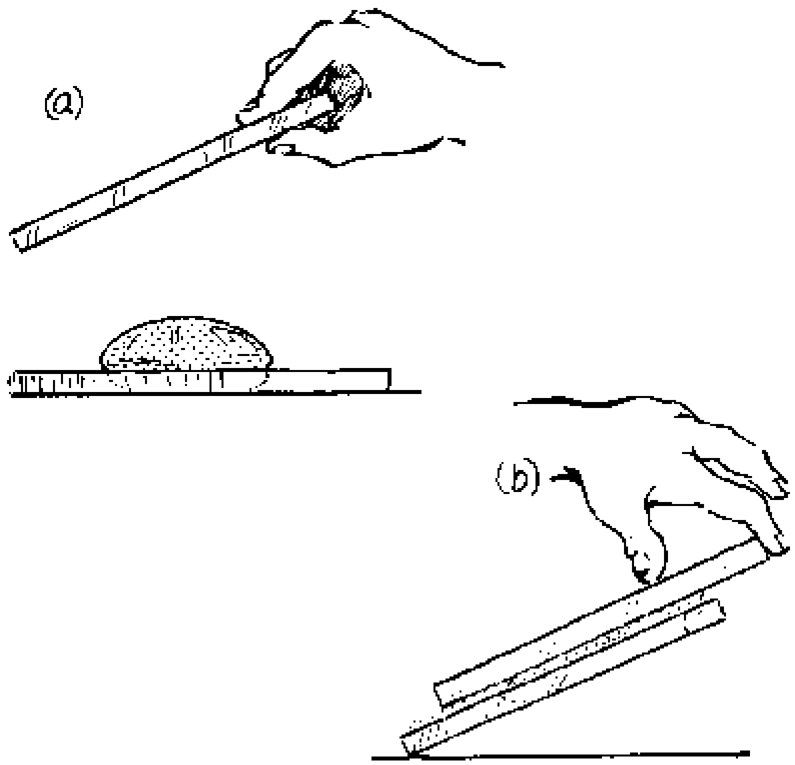

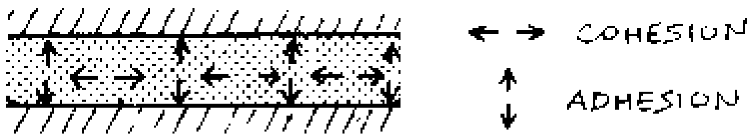

P: Drip water on a clean glass sheet (a).

Q: What happens?

P: Place a second glass sheet on the wet first sheet and try to lift it, see fig.(b).

Q: What do you notice?

E: (a) Water spreads to form a patch on the first glass surface because *adhesive forces* attract water molecules to the glass surface.

(b) A strong force is applied to separate the two glass sheets because the adhesive forces between glass and water are large.

4.4.2 Water Drops from the Tap

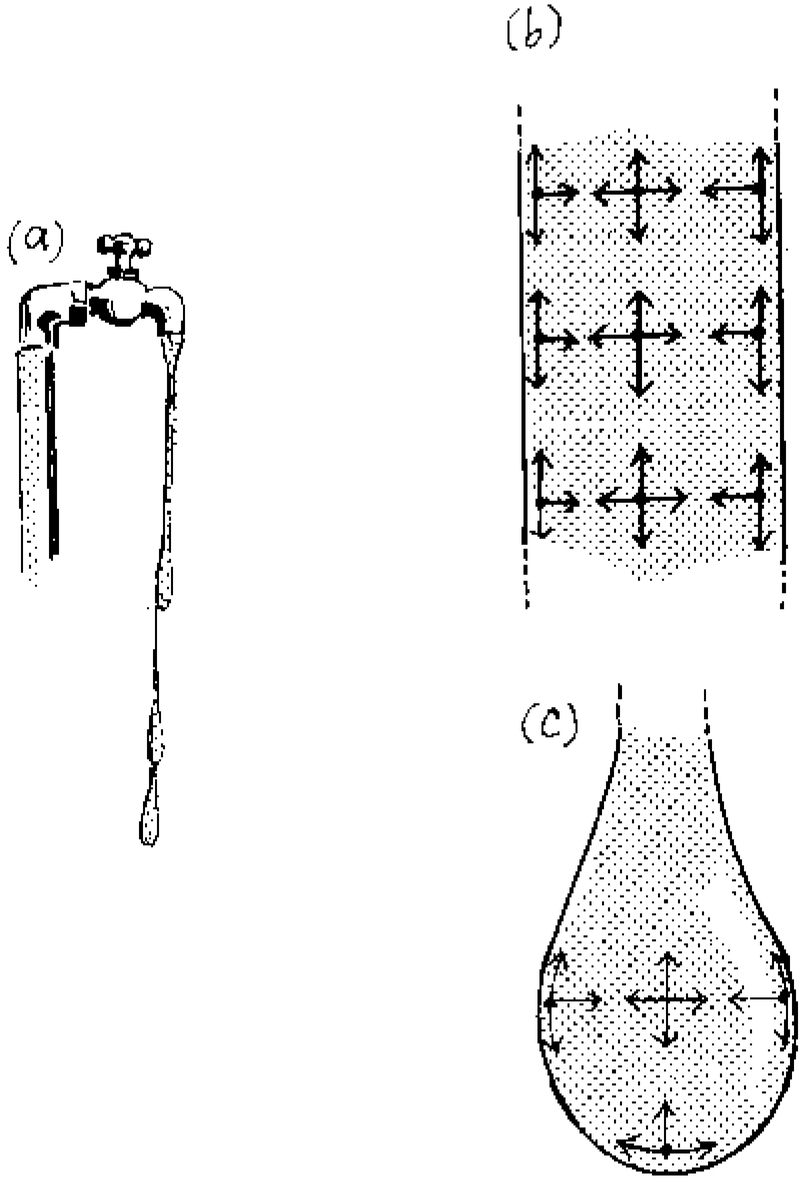

P: Let a thin stream of water flow from a water tap.

Q: What happens?

O: The water stream grows thinner and thinner as it moves further down and finally breaks to form drops.

E: Considerably strong *cohesive forces* exist as the stream starts to flow, but as the stream grows thinner the cohesive forces are overcome by the accelerating force of gravity and hence the stream is breaking down to drops. The molecules of the resulting drops are still held together by cohesive forces.

4.4.3 Surface Forces

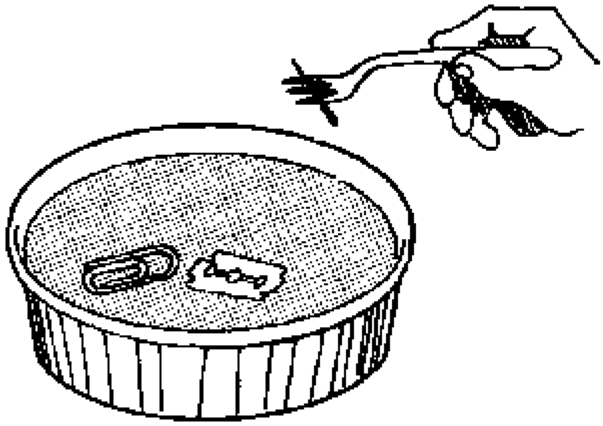

P: Carefully float a needle, a razor blade, a clip and a pin on a water surface as shown.

P: What do you observe?

E: The surface of water behaves like a thin elastic membrane. This is due to forces of cohesion called *surface tension.*

H: The pin can be easily floated with the help of a fork.

4.4.4 More on Surface Forces

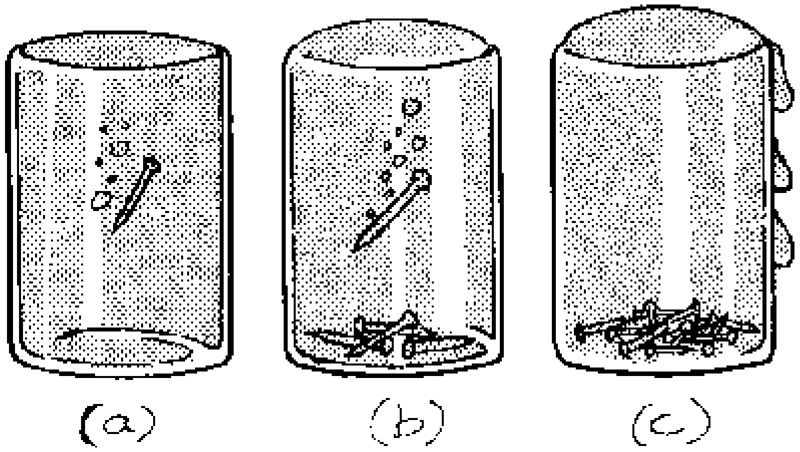

P: Carefully fill a transparent glass vessel with water to the rim. Add nails, one at a time, to the water and count the number of nails sunk just as water begins to spill over.

Q: Explain your observations.

E: The water surface bulges out but does not break immediately because of strong *cohesion forces* between the water particles.

4.4.5 Affecting Surface Tension

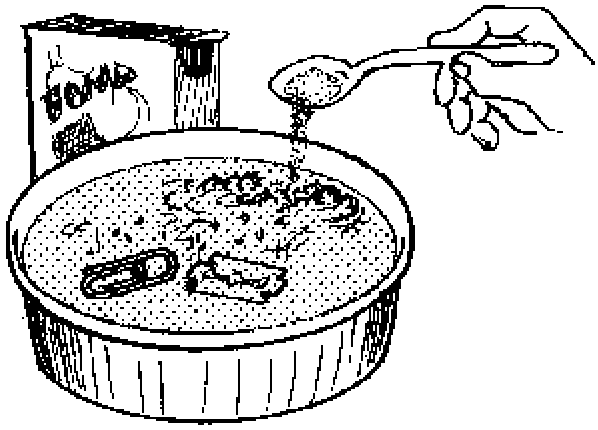

P: Repeat experiment 4.4.3 using detergent or soap solution instead of water.

Q: What do you observe?

E: Soap lowers the *surface tension* of water and therefore the bodies sink.

4.4.6 Capillary Rise

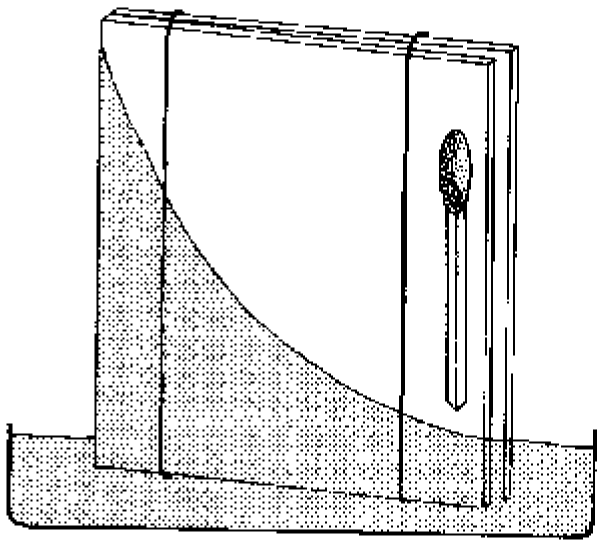

P: With the help of a rubber band and a matchstick, arrange two clean glass sheets as shown in the diagram. Place the arrangement in a plate containing some water.

Q: What do you observe?

E: Water rises to different heights along and between the glass sheets. This is *capillary action.* Water rises more where the glass sheets are closer together (see also 4.4.7).

4.4.7 Measuring Capillary Rise

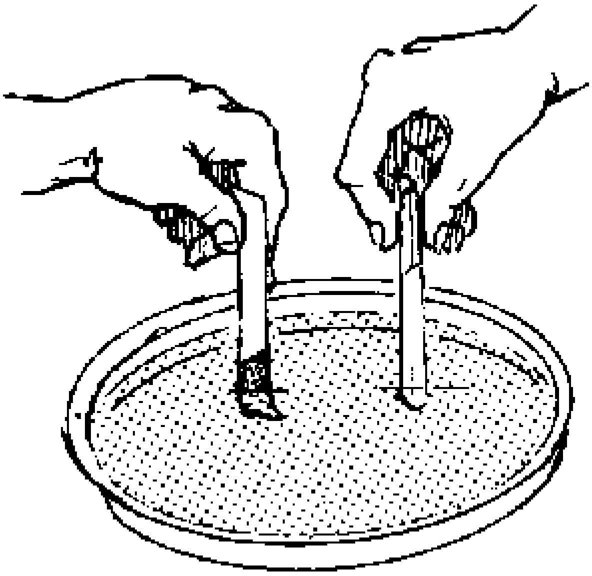

P: Hang a strip of newspaper and place a chalk-stick in a vessel containing water. Leave the arrangement for some time and measure the capillary rise in each with a ruler.

Q: Explain the causes of the differences in capillary rise.

E: Due to smaller capillaries water rises faster in the chalk-stick than in the paper.

H: Test other substances too.

4.4.8 Automatic Irrigation

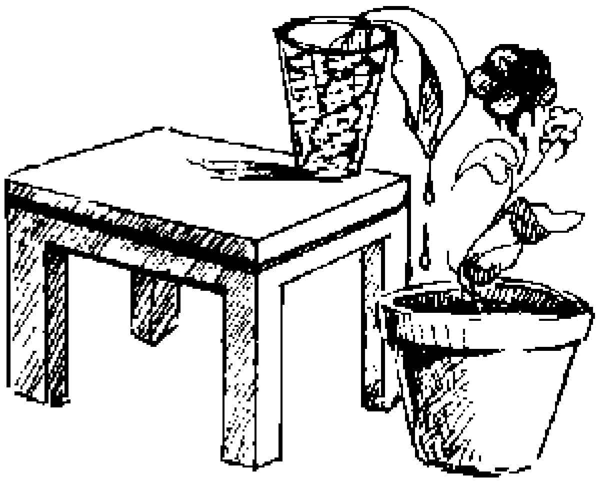

P: The knowledge of capillarity can be used to provide an automatic irrigation. Students can perform irrigation by dipping a porous material such as paper or cotton cloth in water.

4.4.9 Inclined Water Transport

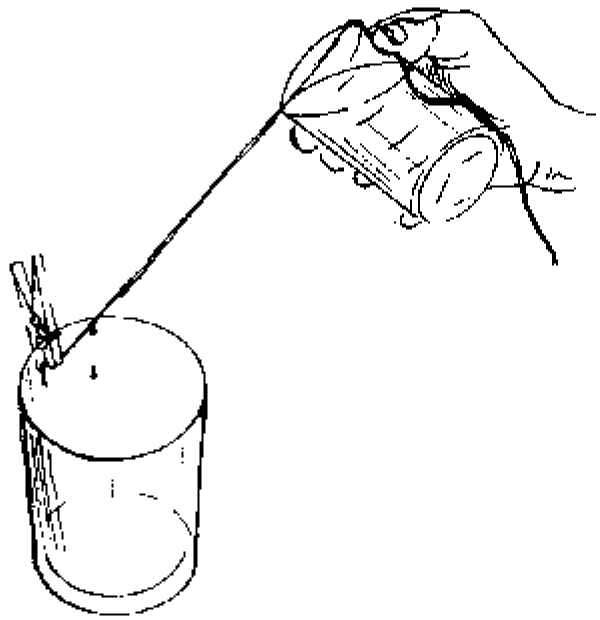

E: When *adhesive forces* are greater than *cohesive forces,* drops of water can be made to move down along an inclined thread.

4.4.10 Weak Adhesion

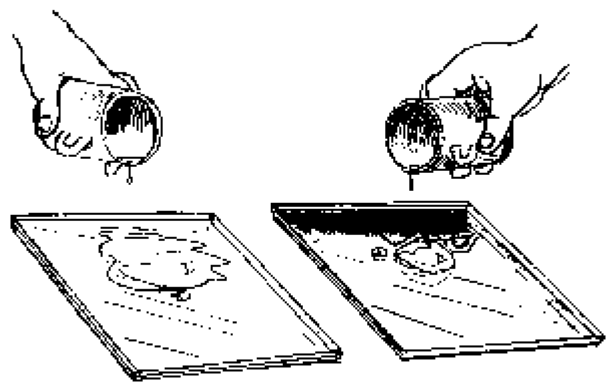

P: Put a few drops of water on a clear glass surface (a) and on a sooty or greasy surface (b).

Q: What do you observe?

E: The shiny surface gets wet because the *adhesive forces* between water and glass are very great. The sooty or greasy surface does not get wet because adhesive forces between water and these surfaces are very weak.

4.5 Elasticity and Viscosity

Elasticity is the ability of a substance to recover its original shape after a distorting force is removed. *Hooke's law* on elasticity states that the extension of a spring is directly proportional to the load applied provided the elastic limit is not exceeded. Most materials are elastic. It is important to know the behaviour of a material when acted by forces before we can use it for a particular job.

Viscosity is the frictional force exerted by a fluid. The flow of liquids is influenced by this force. Where the frictional force is greater, the liquid flows less readily and is said to be more viscous and vice versa.

4.5.1 Elasticity in Solids

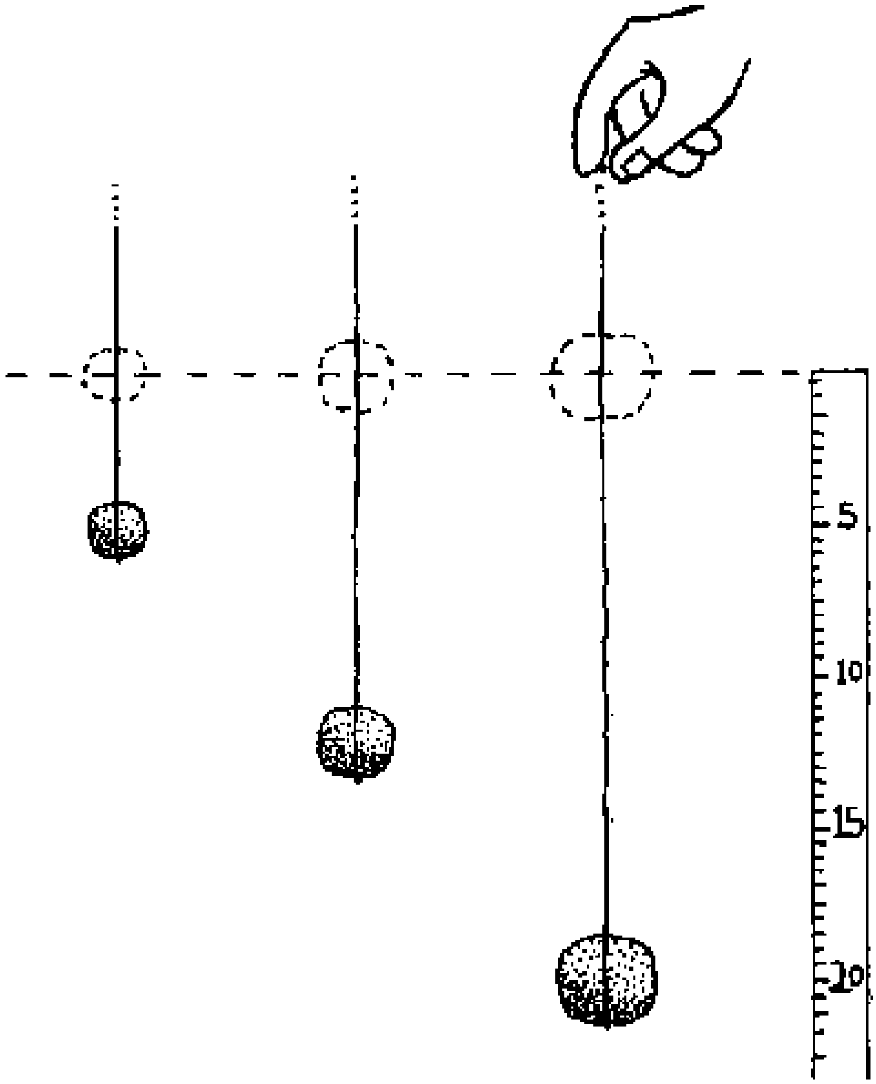

P: Attach various masses (e.g. 1 g, 2 g, 3 g) to a rubber band or a spring and measure the extension for each mass attached. Remove the masses in succession and record the corresponding readings.

Q: What happens when the masses are removed one after the other?

Plot a graph of extension (y-axis) against mass (x-axis).

E: The graph obtained shows that the extension is proportional to the mass which is *Hooke's Law.*

4.5.2 Viscosity in Liquids

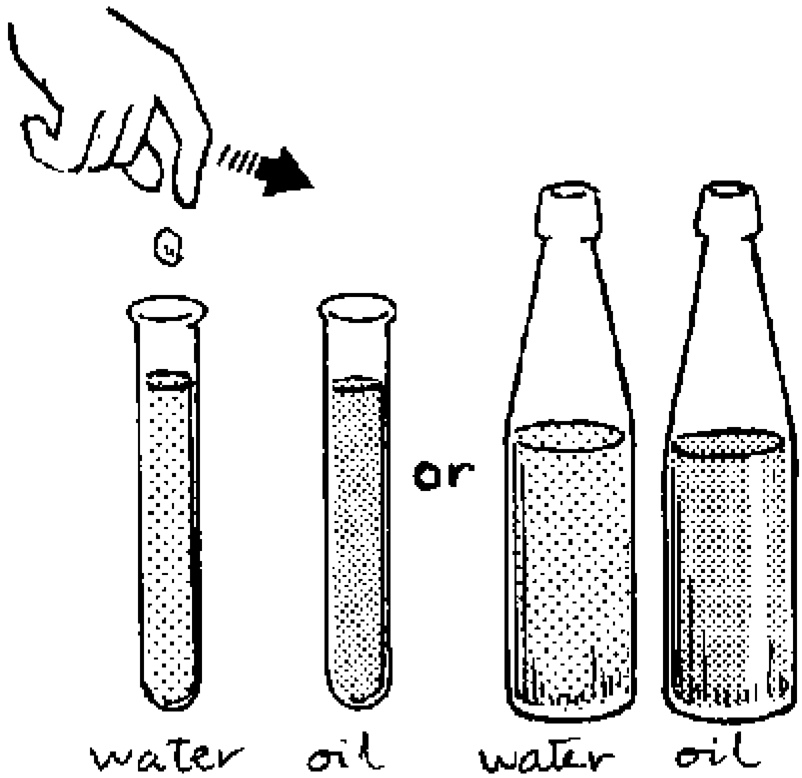

P: Fill one test-tube or a tall bottle with water and another with oil, both to the rim. Put a small stone into the water and record the time taken by the stone to reach the bottom. Repeat the experiment using oil.

Q: In which liquid does the stone take longer to reach the bottom?

E: The stone takes longer to reach the bottom in the vessel containing oil because oil has a higher *viscosity* than water.

5. Thermal Physics

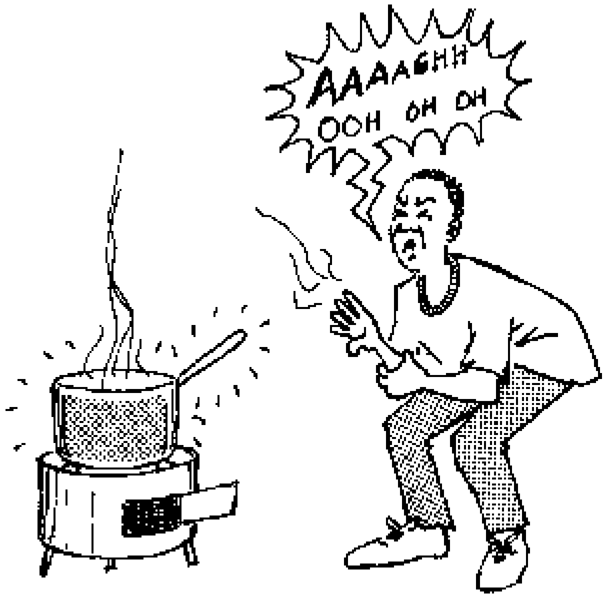

5.1 Thermal Energy and Temperature

Thermal energy is a form of energy which can easily be produced by converting other forms of energy. Thermal energy is commonly called *heat.* The quantity of heat absorbed by a body generally causes an increase in its temperature. The *upper fixed point* of a thermometer is the temperature of the steam of pure water boiling at standard atmospheric pressure. It is 100°C. The *lower fixed point* is the temperature of pure melting ice at standard atmospheric pressure. It is 0°C. *Absolute zero* is the coldest possible temperature which is -273°C. This corresponds to the zero degree on the kelvin scale.

5.1.1 Sources of Thermal Energy

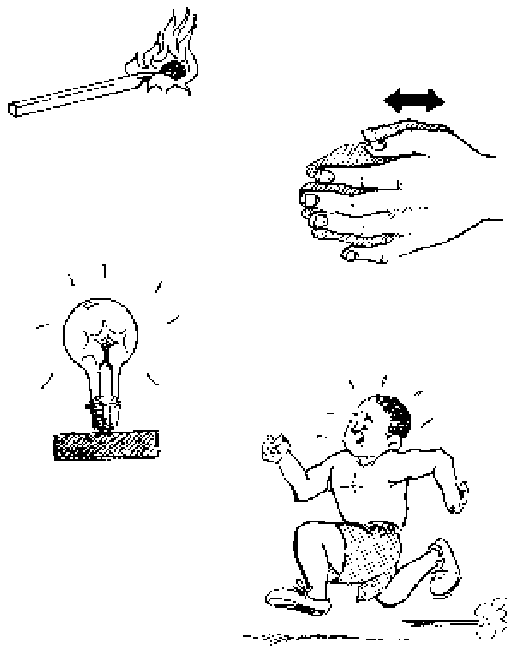

P: Ignite a match stick. Rub your hands very vigorously. Switch on an electric bulb. Run as fast as you can a certain distance or up a staircase.

Q: Which forms of energy are converted to thermal energy in each case?

E: (a) A match stick burns converting *chemical energy* into *thermal energy.*

(b) An electric bulb gets heated because *electric energy* is converted to *thermal energy.*

(c) The hands get hot, because *mechanical energy* is converted to thermal energy.

(d) We feel hot, because our body converts the *chemical energy* of the food partially to *thermal energy.*

5.1.2 Principle of a Thermometer

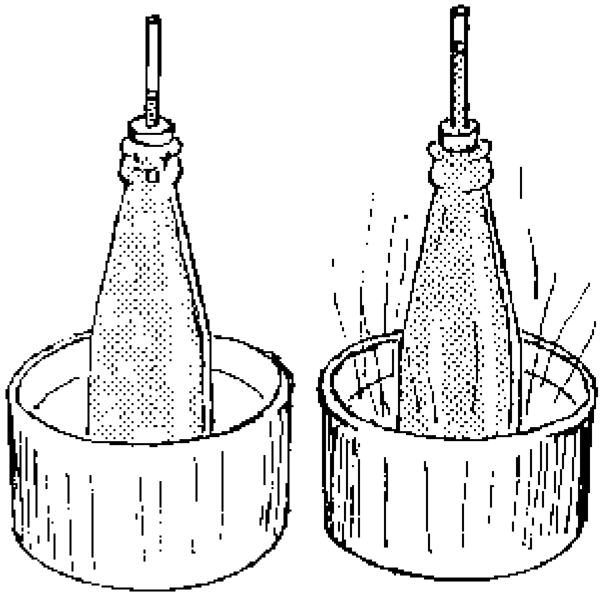

P: Fill a small bottle (about 0.5 litre) with coloured water up to the rim. Tightly fix a stopper which is carrying a narrow transparent tube (e.g. an empty ball pen tube) into the mouth of the bottle. The liquid level should be just visible above the stopper. Then put the bottle into hot water or heat it gently.

Q: What happens to the liquid level in the tube? Why?

E: The liquid level rises, because the liquid is expanding on being heated.

A: The principle of expansion of liquid is used in clinical thermometers. In the clinical thermometer the expansion of mercury is used to measure the body temperature. Obtain a clinical thermometer and discuss its scale. Ask the students to draw a diagram of the thermometer. Some out-door thermometers contain coloured alcohol instead of mercury. The expansion of alcohol is six times greater than that of mercury. Mercury is often used in thermometers for measuring higher temperatures than alcohol because it has a higher boiling point than alcohol.

__5.1.3 Fixed Points__

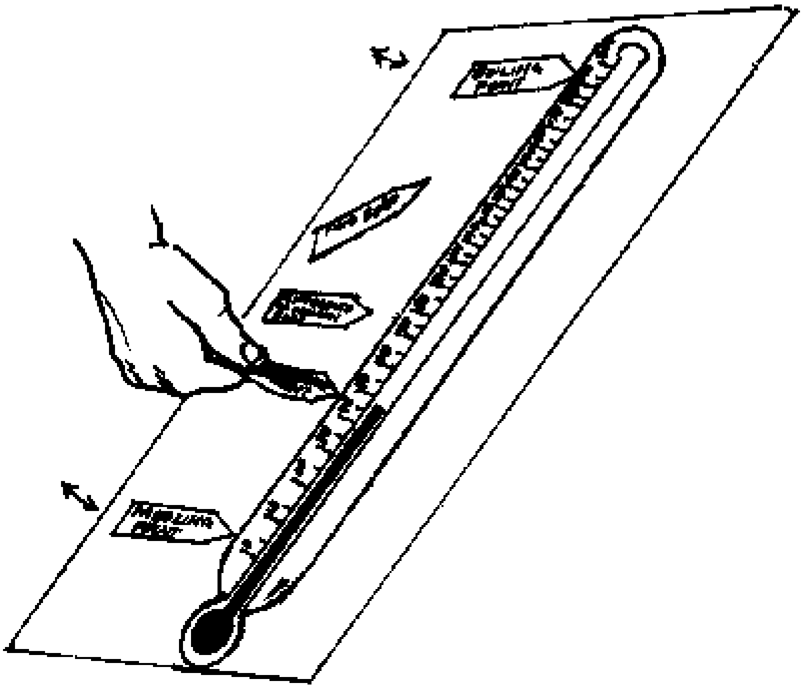

P: Draw a large diagram (a display chart) of a thermometer on a paper (paper from cement bags is suitable). Cut out paper arrows for indicating the characteristic fixed points for water and other substances. The pupils can be asked to indicate (using the arrows) the appropriate fixed points on the diagram.

__5.1.4 Specific Heat Capacity of Liquids__

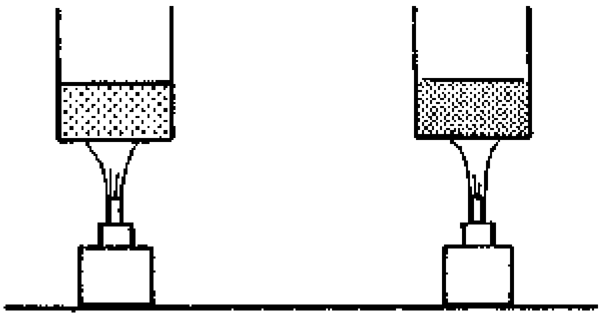

P: Heat equal masses of different liquids (e.g. water and oil) in two identical containers using a "kibatari" (kerosine lamp) for the same length of time.

Q: What difference in temperature can you feel with your finger?

E: The temperature of the oil is higher, because it needs less energy to raise the temperature of one gram of oil by 1°C than that of water. Thus, using the same amount of heat and mass, the temperature of oil must be higher.

H: Great care must be taken when heating oil, for it can catch fire (and you should not put your finger in it, if you have heated it for a long time).

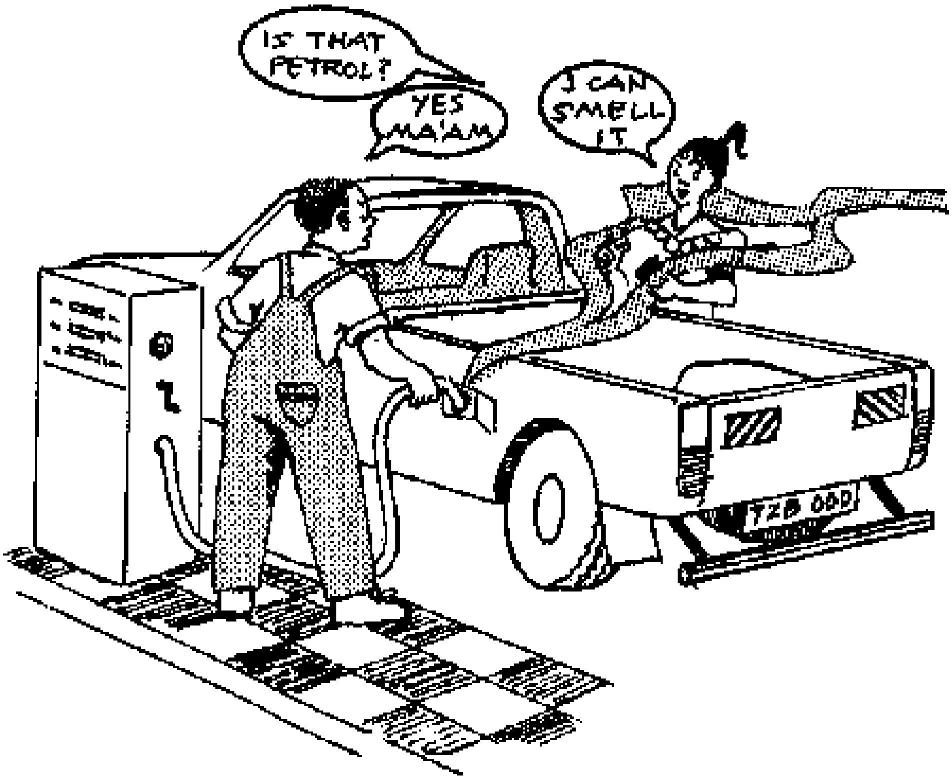

5.1.5 Thermal Energy

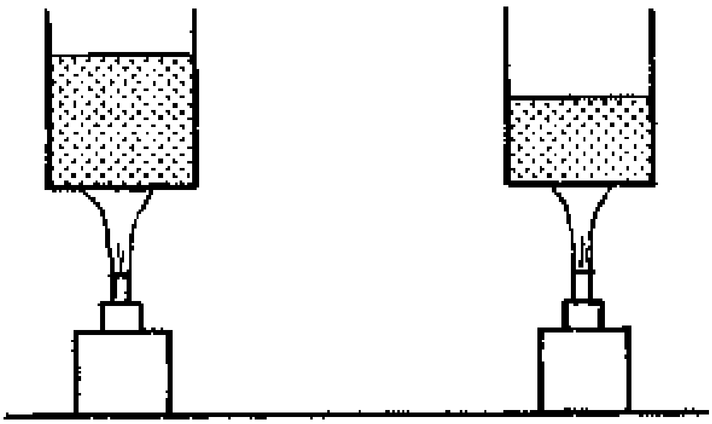

P: Heat different quantities of water using a "kibatari" (kerosine lamp) in two identical containers (e.g. tin cans) for the same length of time. Dip your finger into the two containers of water.

Q: What differences in temperature can you feel?

E: The temperature of the smaller quantity of water is higher, because it received more thermal energy per gram of its mass than the larger quantity. So for the same heat input the temperature rise of the smaller quantity of water will be greater.

5.1.6 Application of Specific Heat Capacity

P: Using your hand find out how fast a water puddle and a heap of sand warm up during the day. Find out again how fast they cool during the night.

E: A heap of sand heats up faster during the daytime and cools down faster during night, because sand has a lower specific heat capacity than water. (Specific heat capacity of water = 4200 J/kg°C; of sand = 800 J/kg°C).

5.2 Thermal Expansion

Solids, liquids and gases expand when heated and contract when cooled. Expansion and contraction occur in all directions. The kinetic theory explanation is, that the particles vibrate with large amplitudes when heated, forcing each other a little further apart. Cooling reduces the amplitude of vibration and brings the particles closer together. *Water* has an anomalous expansion. Its highest density is at 4°C. Therefore in cold regions water at this temperature always sinks to the bottom of lakes. This is why in cold regions the water at the bottom of the lakes does not freeze.

5.2.1 Expansion Apparatus

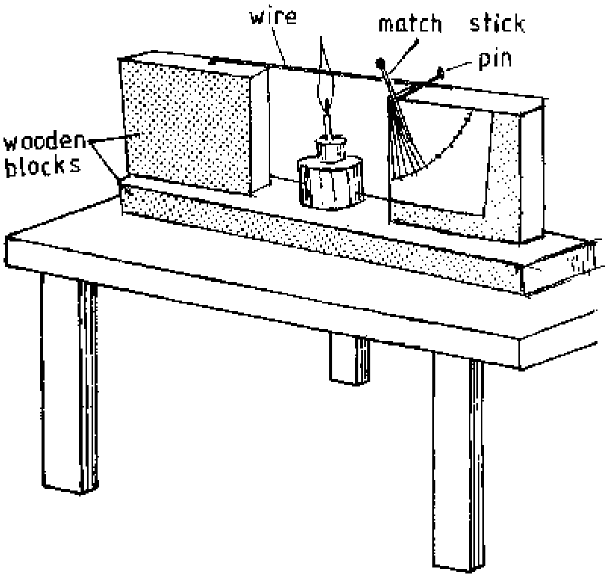

P: Place a metal rod horizontally with one end fixed firmly on a wooden block. Insert the pin through a match stick and place it under the rod as. shown in the figure. Heat the rod from below with a candle or a "kibatari" (kerosine burner).

Q: What do you observe?

E: The match stick turns in the clockwise direction, because the rod expands causing the pin to roll forward and the match stick to turn. H: For the best results the pin should lie on a smooth surface. A wire of 2 mm diameter or a bicycle spoke can be used for the metal rod.

5.2.2 A Simple Model for Explaining Expansion

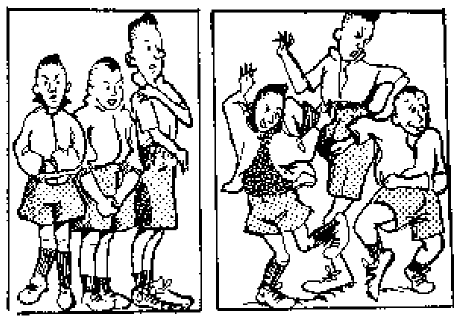

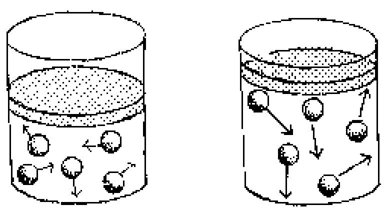

P: Expansion can be explained by a simple human model: When a group of pupils stands still, they are close together and they do not need much space. But if they start to dance or even to run about, each of them needs more space and the group as a whole takes more space. The particles in a body are like the pupils in the group, they only move far apart when they are heated and hence need more space.

5.2.3 Expansion of a Coin

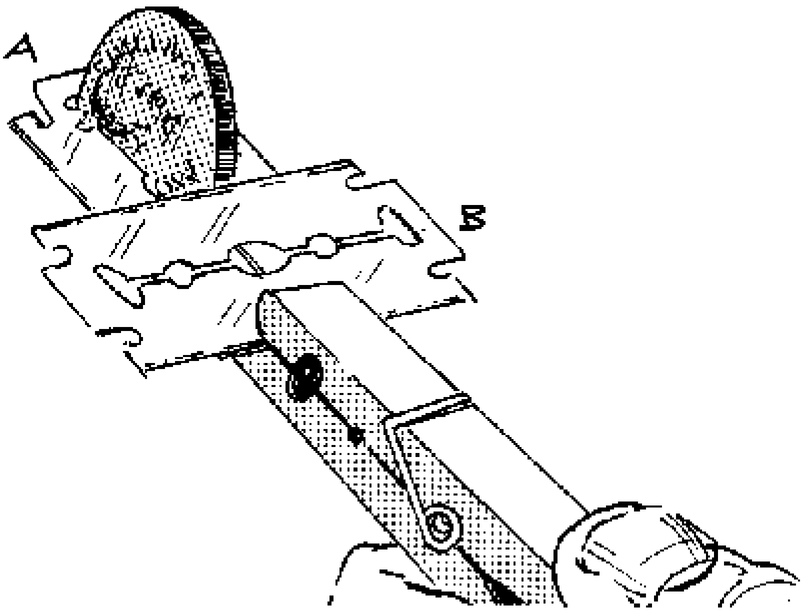

P: Place a coin into the slit of a razor blade A. Slide a second blade B so that the coin just passes through the slit. Firmly clamp the blades together with pegs or clips. Now remove the coin and heat it in a flame and try to pass it through the slit again.

Q: What happens?

E: The coin does not pass through, because it has expanded due to heating.

5.2.4 Expansion of a Wire

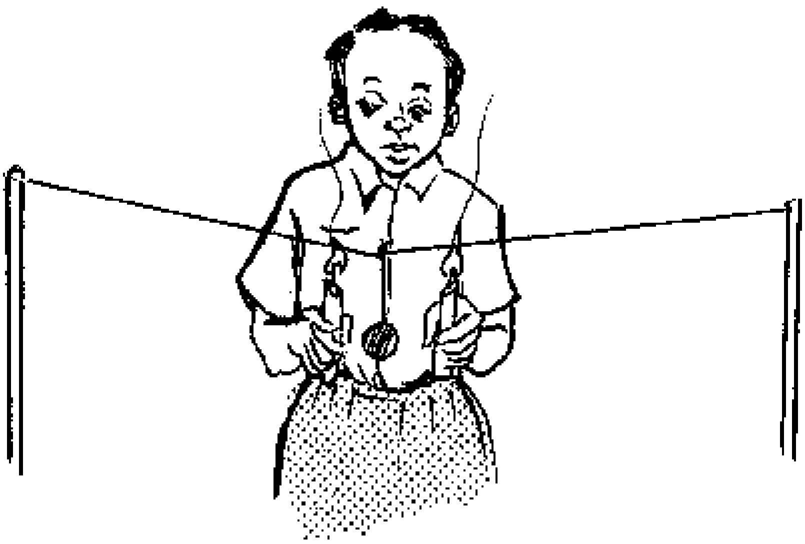

P: A thin copper wire is firmly fixed between two chairs and a weight is hung in the middle to stretch the wire. Then heat the wire along its length.

Q: What happens to the weight?

E: The weight sags further down, because the heated wire expands and hence increases in length.

5.2.5 Applied Expansion

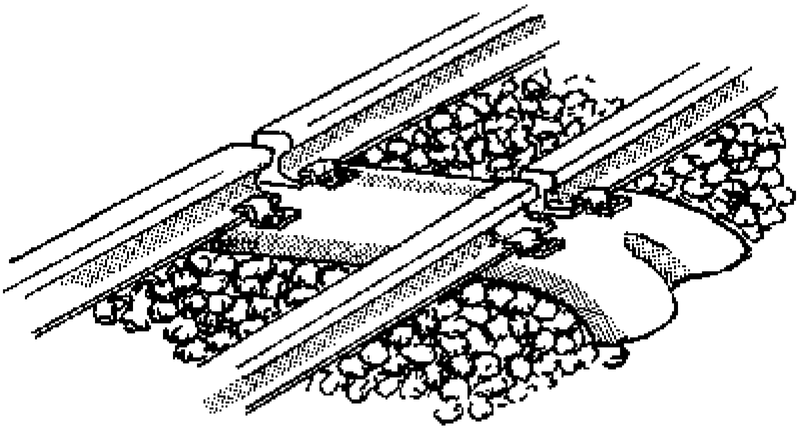

Steel railway lines have gaps at the end of each length of rail. Clicks can be heard as the wheels go over them.

Q: Why are the gaps necessary?

E: The gaps are needed to allow the rails to expand without bending during hot days. The gaps are called *expansion gaps.*

5.2.6 Bimetal Principle

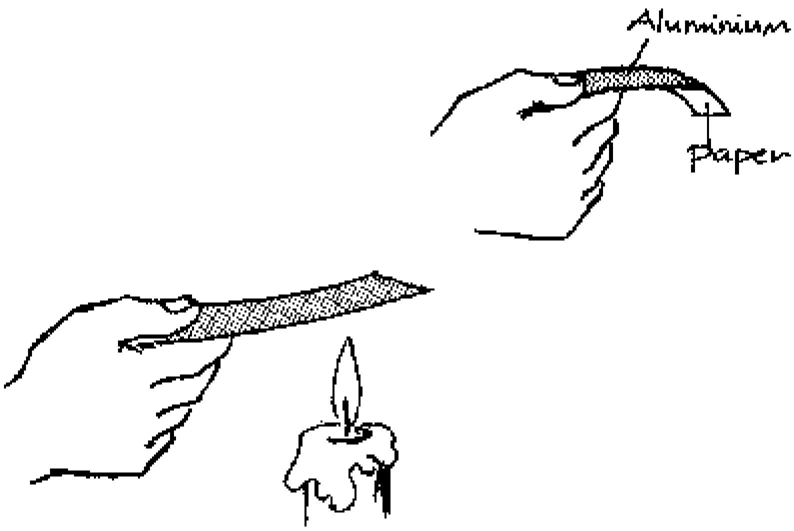

P: A bimetallic strip is made of two different metal strips like iron and brass or iron and aluminium joined together. To show the principle of a bimetallic strip, cut a one centimeter strip of aluminium paper from a cigarette packet and hold it close to a flame.

Q: What happens?

E: The strip bends towards the paper side, because aluminium expands more than paper.

5.2.7 Expansion of a Liquid

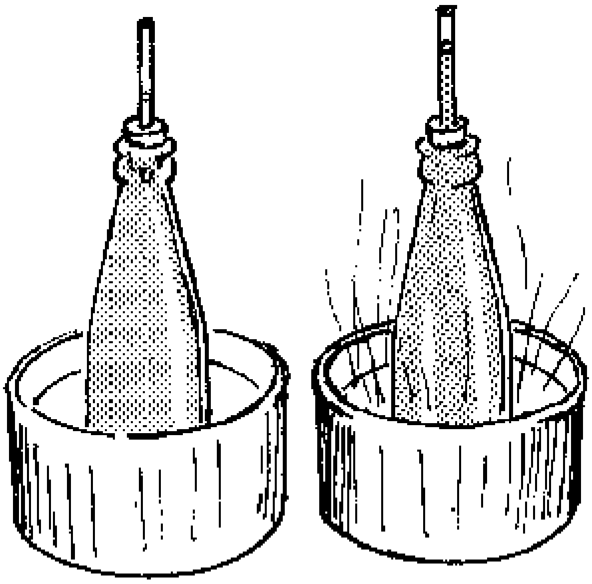

P: Fill a bottle up to the rim with coloured water. Tightly fix a cork bearing a transparent plastic tube (an empty ball point pen tube). Place the bottle into hot water.

Q: What happens?

E: The liquid rises along the tube, because it is heated by the hot water and expands along the tube.

5.2.8 Allowing for Liquid Expansion

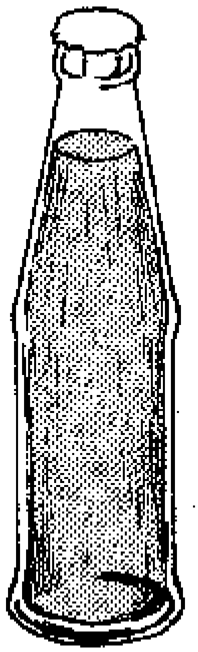

P: Observe the top of soda or beer in a corked bottle.

Q: Why does the bottle contain a small amount of gas trapped above the soda or beer?

E: The space is to allow the expansion of soda or beer when the bottle is stored in a warm place.

5.2.9 The Jumping Coin

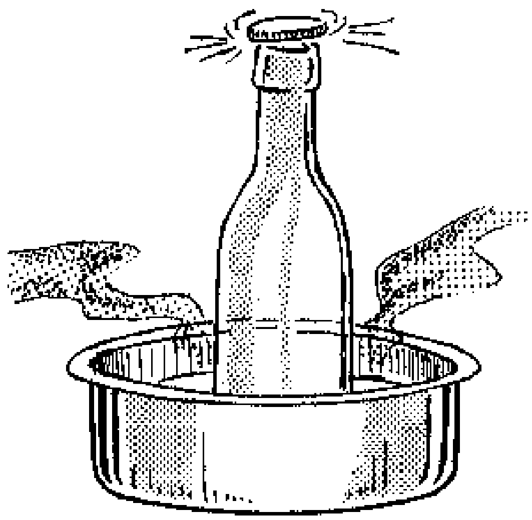

P: Wet the rim of a bottle with water and cover it with a coin (e.g. a shilling coin). Place the bottle into a hot water bath.

Q: What happens to the coin after a short time?

E: The coin vibrates opening and closing the bottle. This is because when the air inside the bottle expands, it pushes up the coin and when the air escapes, the pressure inside drops and the atmospheric pressure pushes down the coin.

5.2.10 Contraction of Air

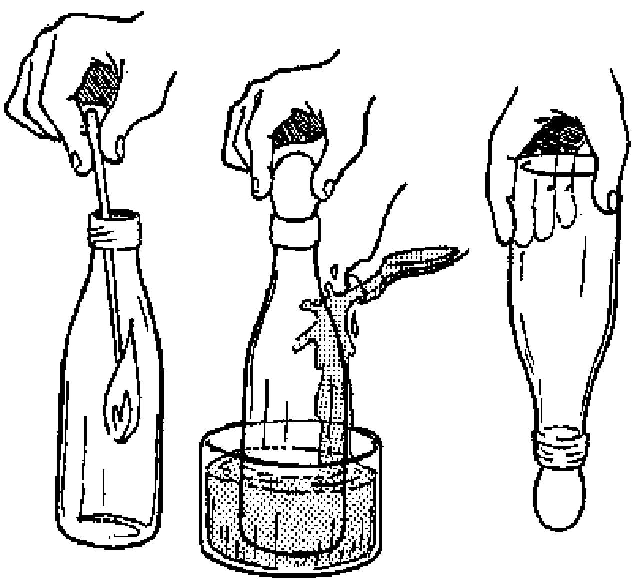

P: Place an "empty" bottle into a hot water . bath or burn some paper or a wooden stick in it. After it has warmed up, close the bottle either with your thumb or a boiled and peeled egg. Now immerse the bottle in cold water.

Q: What do you observe?

E: The thumb or egg will be held by the bottle, because on cooling the bottle the air inside contracts and creates a lower air pressure inside.

5.3 Changes of State

There are three states of matter, *solid, liquid* and *gas.* Matter can be converted from one state to another:

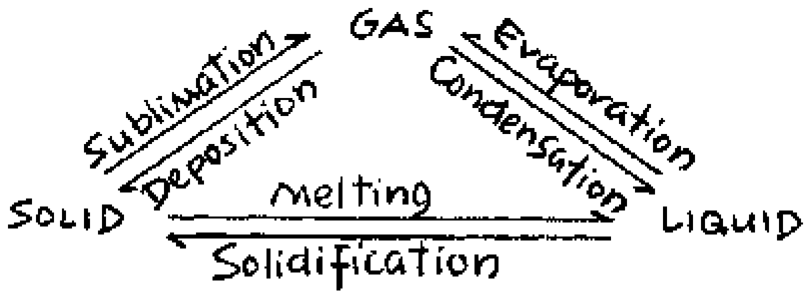

Every pure substance has *characteristic fixed points* at which one state changes into another one. That depends on the temperature. The water cycle in the atmosphere illustrates the change of state of water.

5.3.1 Changes of State of Water

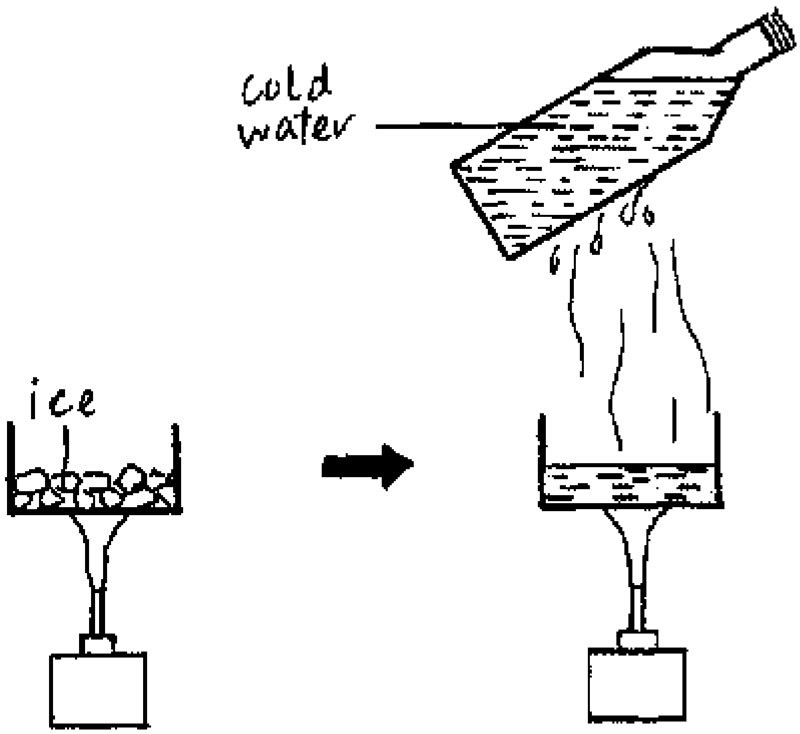

P: Heat ice in an open can for a few minutes and hold a glass bottle filled with cold water above the can.

Q: Which changes of state can you observe?

E: The ice changes from solid to liquid *(melting)* in the can. The liquid changes to gas *(boiling)* and the steam changes to liquid on the cold surface of the cold bottle *(condensation).*

5.3.2 Rain and Hailstone Formation

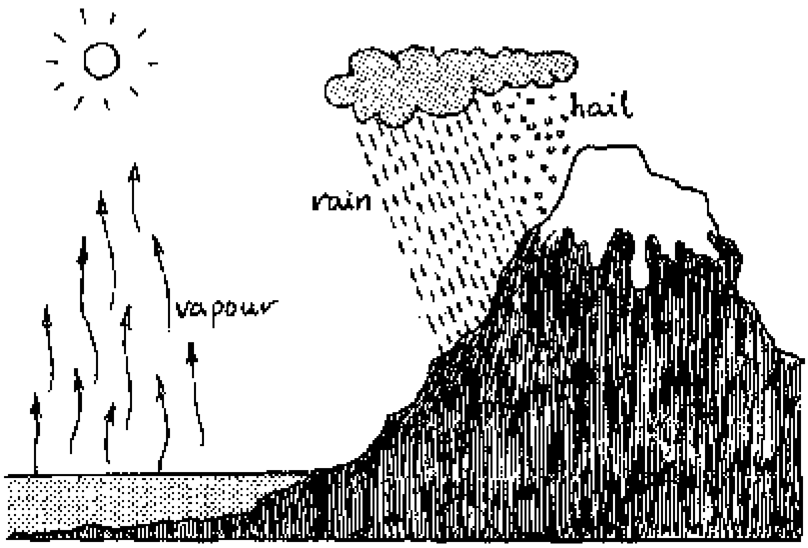

P: Rainfall is a common occurence all over the country and sometimes the rain is accompanied by hailstones which destroy our crops.

Q: Can you explain how rain and hailstones are formed?

E: The sun heats the sea and lakes. The water evaporates and rises up in the air. The vapour cools and condenses into water droplets forming a part of the clouds. At higher altitudes where temperatures are very low, bigger drops of water are formed which fall as rain. At times bigger drops of water turn into ice (solid) and fall as hailstones.

5.3.3 Evaporation

P: Pour some spirit or petrol on the back of your hand.

Q: Explain what you feel as the spirit evaporates.

E: The back of the hand feels cold, because evaporation of the spirit needs energy which it absorbs from the skin.

5.3.4 Evaporation

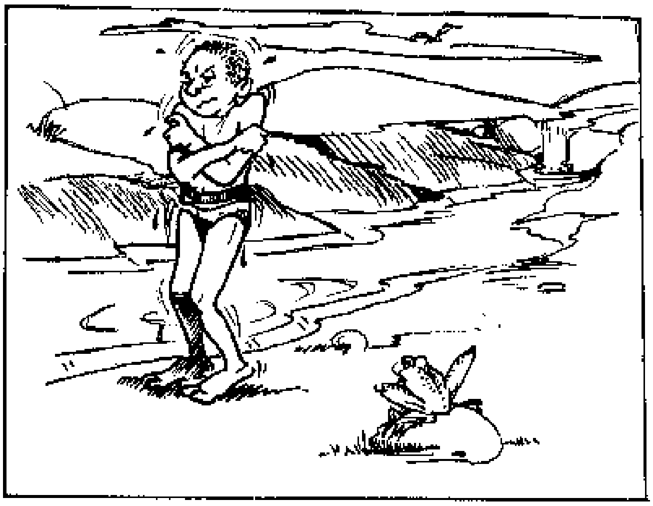

P: A boy plunges himself into a pool of water and then gets out.

Q: Explain the change of the temperature of his body.

E: He feels very cold (chilly) because the evaporation of water from his body absorbs heat from his skin making him feel cold. This explains why we feel very cold when we stand in a draught of air after sweating.

5.3.5 Cooling Water

P: Touch the blackboard with a wet hand.

Q: Observe the trace for some minutes.

P: In many houses water is kept in fired clay pots *(chungu).* Water pots have very tiny pores through which minute amounts of water ooze out.

Q: Explain how water is cooled in these clay pots.

E: Some water passes through the tiny pores and evaporates. The energy needed for the evaporation is taken from the pot and water and hence the water cools down.

5.3.6 The Refrigerator

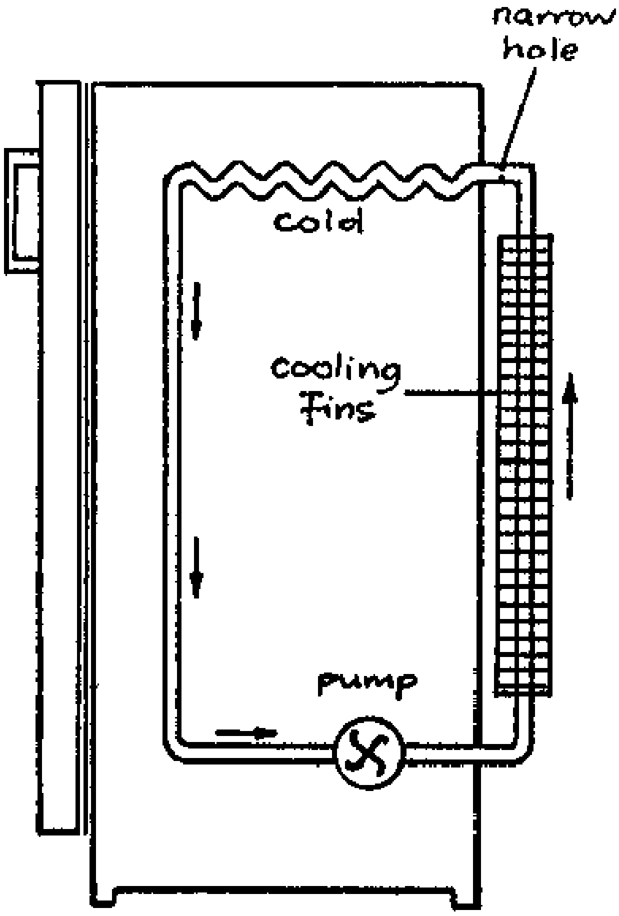

E: Some urban households have got refrigerators. In the refrigerator a special liquid is circulated through a pipe. In one portion of the pipe the liquid evaporates at a low pressure. The energy for the evaporation is taken from the pipe which cools the inner part of the refrigerator. In the pipe at the back the vapour condenses to a liquid under high pressure, thus giving out heat. Therefore cooling fins on the outside have to transmit this heat to the air.

5.3.7 Pressure and Melting Point

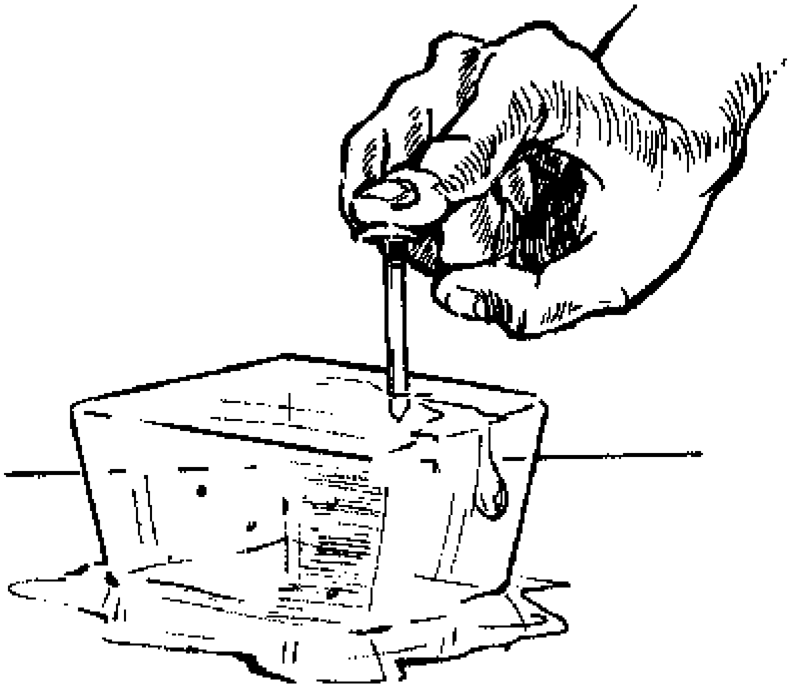

P: Steadily press a nail or a screw into a block of ice without heating it.

Q: What happens?

E: The nail penetrates into the ice because the pressure causes the ice at the tip of the nail to melt. (This is so, because water has less volume than the same mass of ice.) But when you release the pressure on the nail the water freezes again and "glues" the nail into the block of ice.

5.3.8 Impurities and Melting Point

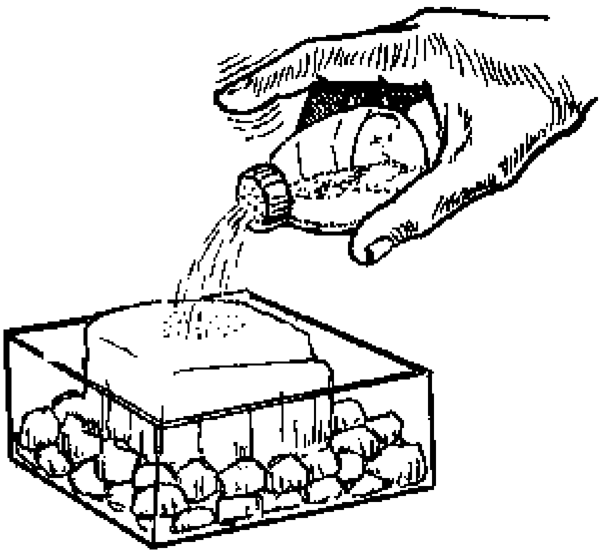

P: Place some pieces of ice in a glass container and sprinkle some salt on the ice. Stir the mixture and measure the temperature.

Q: What do you observe?

E: The ice pieces melt at a lower temperature than 0°C. *Impurities* (e.g. salt) *lower the melting point of ice.*

5.3.9 Pressure and Boiling Point

P: Some people who go for mountain climbing expeditions take pressure cookers with them for cooking on the peak of a mountain.

Q: Can you explain why?

E: The air pressure decreases with the altitude and water will boil at a lower temperature on the peak of a mountain. Generally, *the lower the pressure on the water, the lower its boiling point.* Thus, food would need a very long time to be cooked e.g. on the top of Mount Kilimanjaro. So for food to cook faster we need to use a pressure cooker so that the temperature inside increases to cook the food faster.

5.3.10 The Pressure Cooker

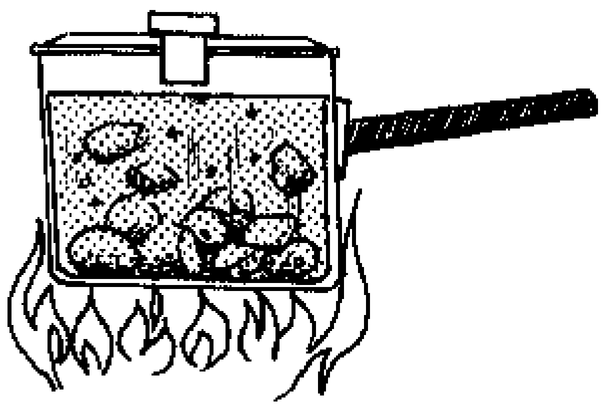

P: Demonstrate how a pressure cooker works.

Q: Explain how it helps to save energy costs.

E: Under the high pressure in such a pot the water boils at a higher temperature of about 120°C. At this temperature food like beans need only about one hour (instead of 3 hours in a normal pot) to cook and become soft. Therefore the pressure cooker uses less fuel to cook and hence saves fuel.

5.4 Transfer of Thermal Energy

Heat can be transfered in three ways:

Conduction of heat is the transfer of heat through a material from one point to another, whenever there is a temperature difference between the two points.

Convection of heat is the transfer of heat energy due to the movement of the material particles of the medium.

Radiation of heat is the transfer of heat energy from one place to another without the use of any material medium.

5.4.1 The Football Model Of Thermal Energy

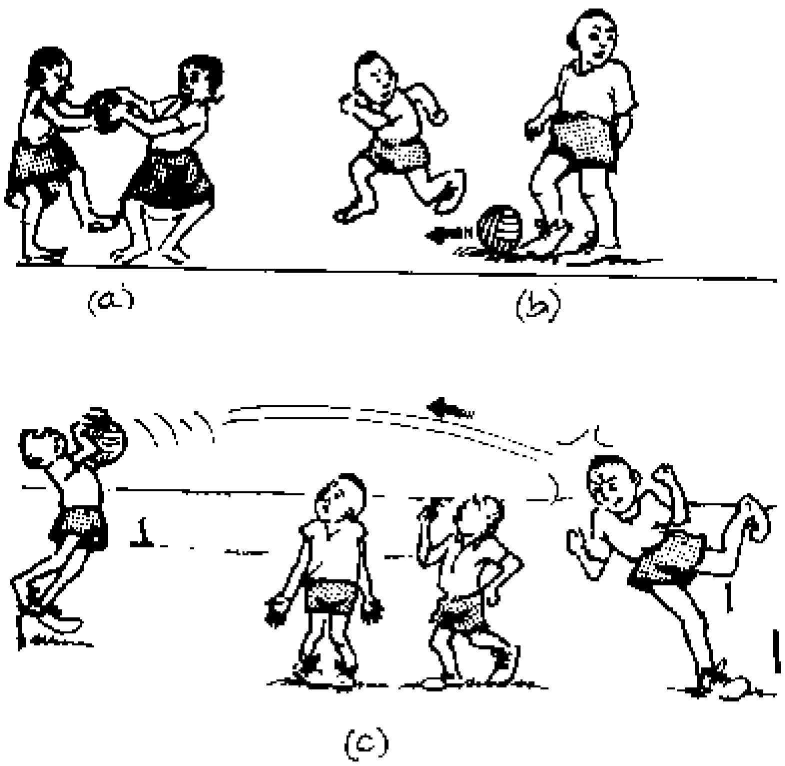

Heat conduction is likened to a football being passed from one player to another just as heat passes from one molecule to another in conduction of heat as shown in figure (a).

Convection is likened to a football being taken by one player from one point of the playground to another one just as heat in a gas or liquid is transported by a particle from one point to another in convection of heat as in figure (b).

Radiation is likened to a football being kicked by one player from one point at the playground to another one without the use of intervening players just as heat is transmitted from a hot object to another without any medium by radiation of heat as in figure (c).

5.4.2 Candle Flame and Heat Transfer

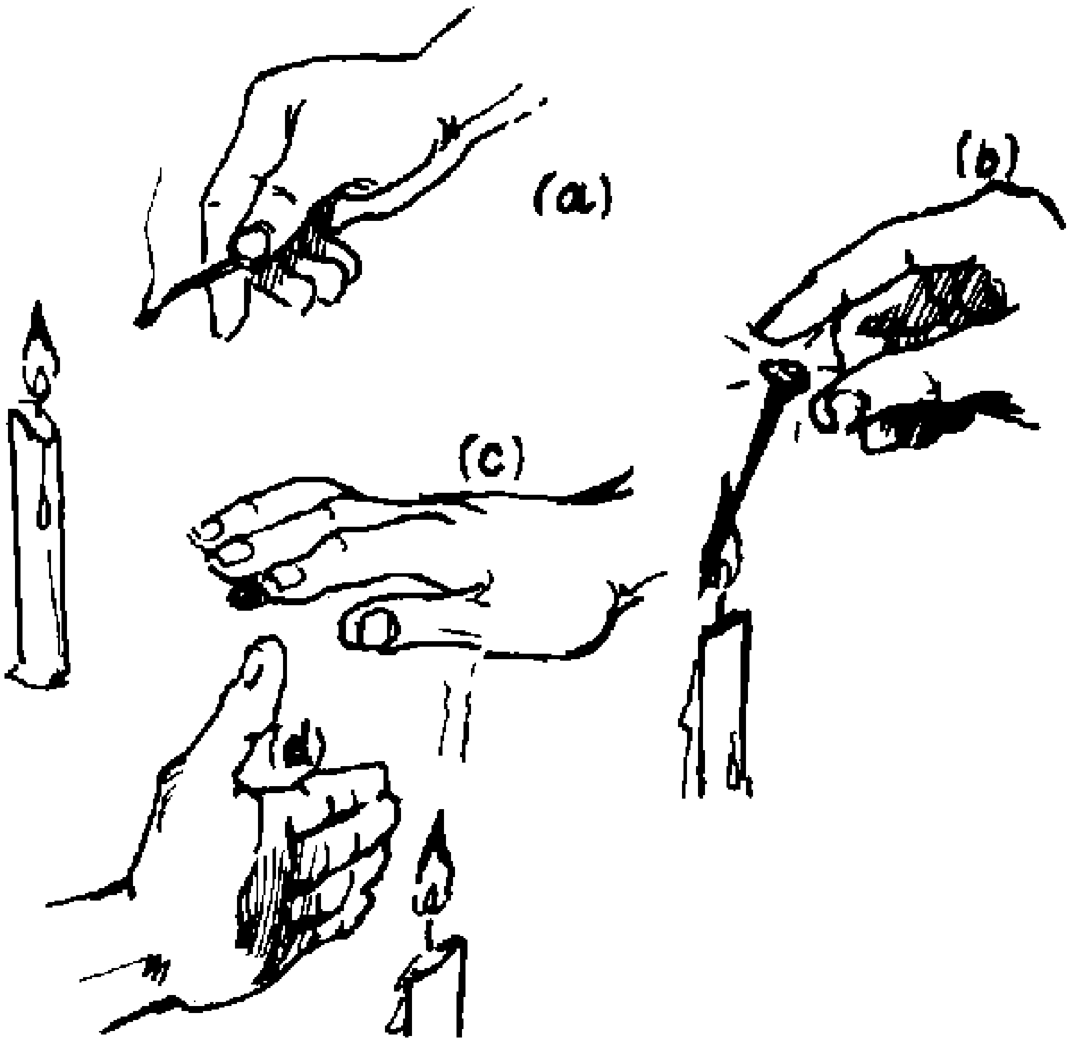

P: (a) Light a candle and demonstrate three ways of heat transfer by a simple hand experiment.

(b) *Conduction:* Stick one end of a nail into the flame.

Q: What do you feel?

(c) Convection: Place your hand at a distance above the flame.

Q: What do you feel?

(d) Radiation: Place your hand at the same distance on the side of the flame.

Q: What do you feel?

O: In each case heat is transmitted to your hand.

P: To check the *amount of heat transfered per unit time* by convection and radiation, hold a new match stick above and on the side of the flame and find out how long it takes to ignite the match stick in each case.

H: Any burner can be used instead of the candle. Non-luminous flames will produce the best results.

5.4.3 Solids as Conductors

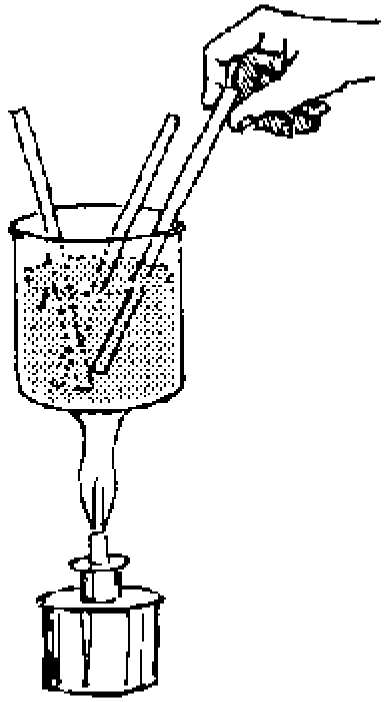

P: Heat water in a container until it is about to boil. Place metal, wooden and plastic rods of the same dimensions vertically into the water. Touch the exposed ends of the rods after 3, 4 and 5 minutes.

Q: What do you conclude about the conductivity of each rod?

E: The metal rod is a good conductor but the plastic and wood arc bad conductors.

A: Plastics and wood are used as handles of saucepans; the saucepans and other cooking pots arc best made of good conductors of heat e.g. metals.

5.4.4 Conduction by a Metal Rod

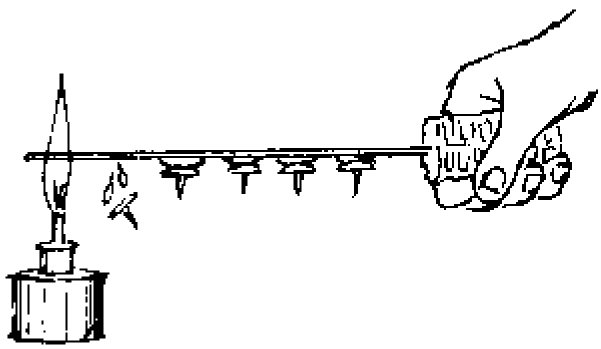

P: Fix several small stones with molten candle wax along a metal rod at a regular interval. Heat one end of the rod.

Q: What do you observe?

E: The stones will fall off one after another starting from the end being heated, because heat is conducted slowly along the rod from the heated end.

5.4.5 Liquids as Conductors

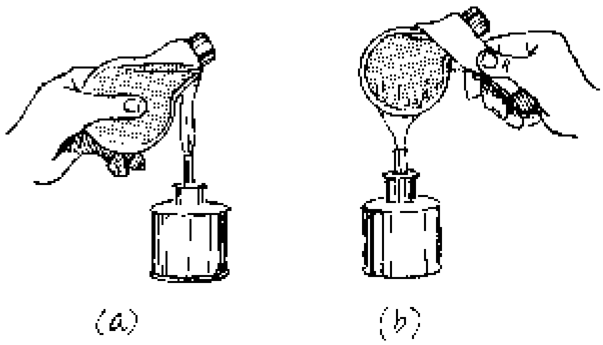

P: Fill a test tube or an opened bulb (see appendix) with water. Heat the water just below the top. Feel the bottom of the test tube with your hand, see figure (a).

Q: Explain what you feel.

E: The bottom of the test tube stays cold because water is a bad conductor and does not conduct the heat to the bottom.

Q: What would happen if you held the test tube at the top and heat it at the bottom? (see figure (b)).

5.4.6 Convection of Heat

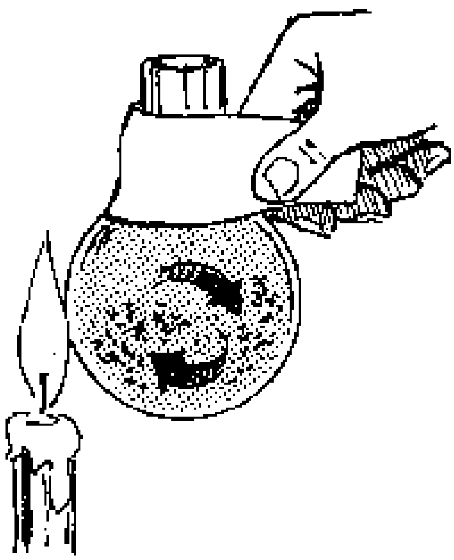

P: Fill a round flask or opened bulb (see appendix) up to the neck with water. Sprinkle a pinch of fine saw dust on the water. Heat one side of the flask only.

Q: What do you observe in the flask?

E: You will see a *convection current* being formed in the flask. The warm water rises and the cooler water sinks down to the bottom as seen by the movement of the saw dust.

5.4.7 Breeze as a Convection Current

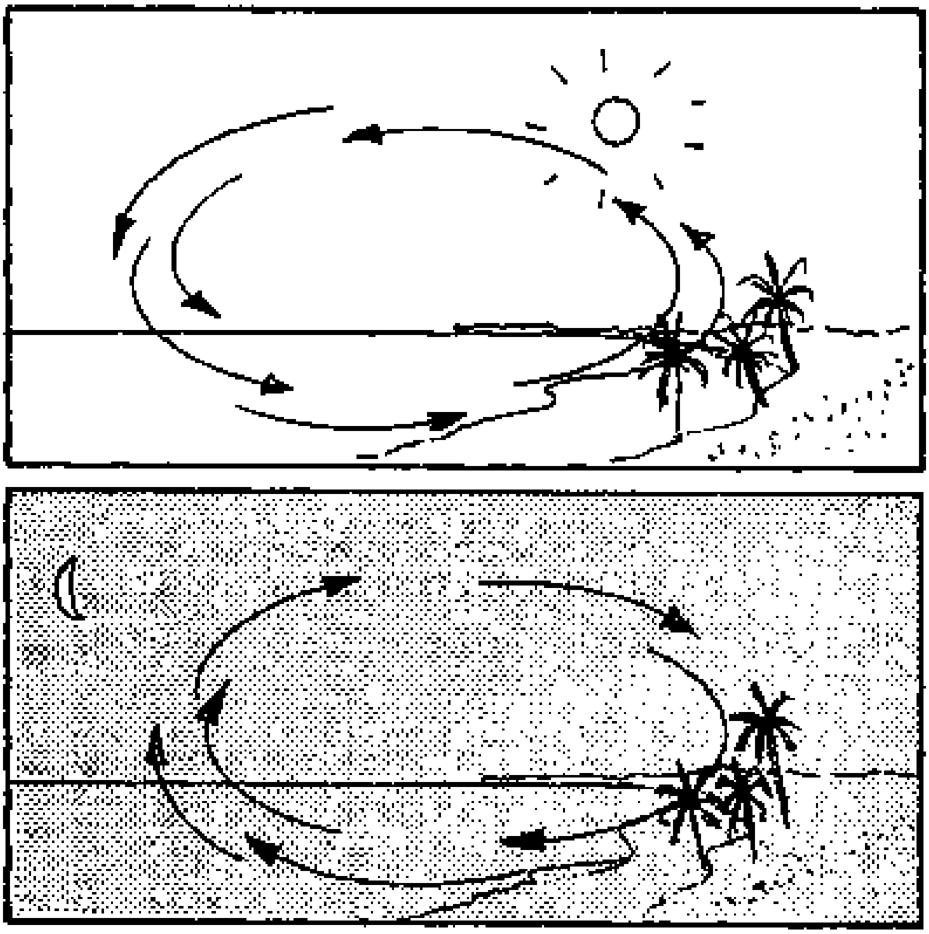

O: At the coast and on lake shores a gentle air stream (breeze) always blows. The direction of the breeze during the day is different from that at night.

Q: How can you explain this?

E: *During daytime* the land warms up faster than the sea. The warm air rises over the land and colder air from the sea flows to the land. This creates a breeze from the sea to the land. *During night,* the water stays warmer than the land, air over the water rises, colder air from the land flows to the sea. This creates a breeze from the land to the sea. The general effect is that the breeze from the sea keeps the daytime temperature on the land lower than expected from the hot sun, whereas the breeze from the land makes the night temperatures cooler than expected.

5.4.8 Good and Bad Radiators

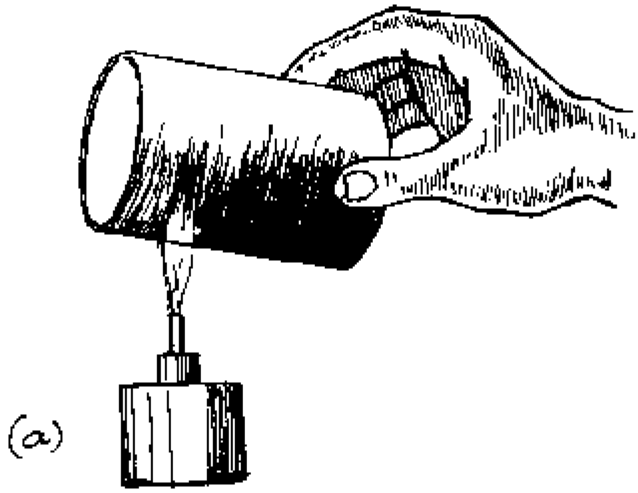

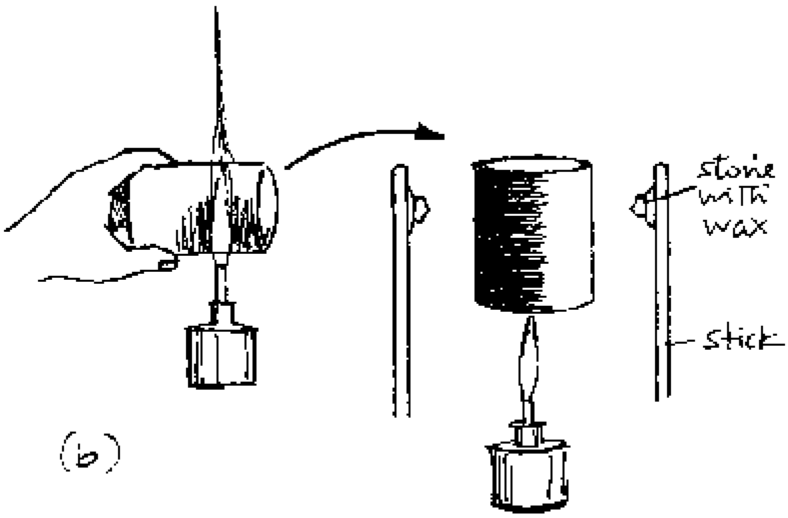

P: Paint one half of the outside of an open can black and leave the other half shiny (see figure (a)). Place a wooden stick near each side of the can. Stick a small stone with candle wax on each stick. Heat the bottom of the can.

Q: What do you observe?

E: The candle wax opposite the blackened surface begins to melt earlier than the wax opposite the shiny surface. This shows that *a black surface is a better radiator than a shiny surface.*

H: Soot and black shoe polish will do for the black paint.

5.4.9 Good and Bad Heat Absorbers

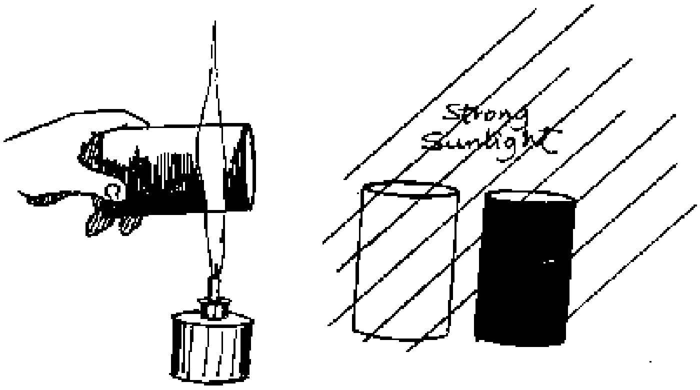

P: Take two shiny and identical cans and paint the outside of one black (soot can do). Place both of them in the sun or place them at equal distances from a fire for some time (about half an hour). Then find out how hot each can feels.

Q: Which can heats up more quickly?

E: The can with a *black surface absorbes heat more quickly than* the one with *a shiny surface.*

A: It is wiser for people in hot areas to wear bright clothes and paint their houses white - so that they absorb less heat. What colour should a petrol tank be painted? Give your reasons.

5.4.10 The Thermos Flask

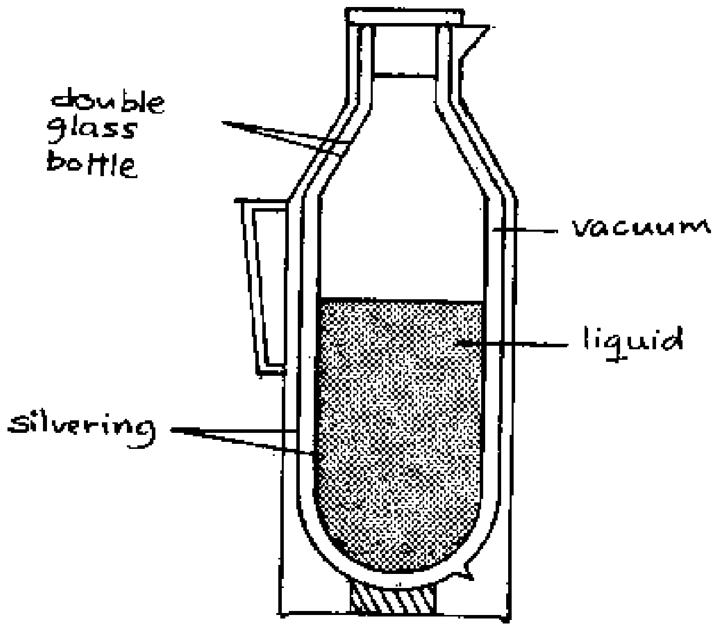

P: The thermos flask is a double walled glass bottle with a vacuum between the walls. Both the inner and outer surfaces of the walls are silvered so that they are shiny.

Q: How does the flask keep hot tea hot or cold water cold?

E: A vacuum is a bad conductor of heat and does not allow convection of heat The vacuum prevents heat loss or gain by conduction and convection. The silvery walls reduce heat absorption and heat loss by radiation.

6. Wave Motion

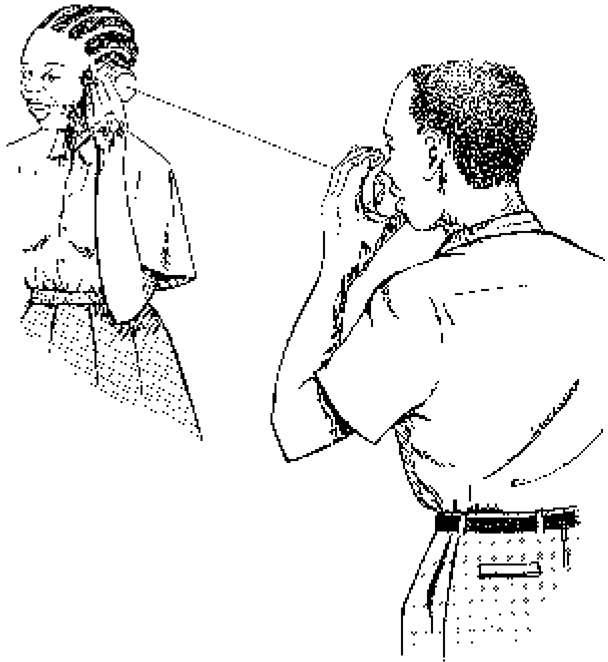

6.1. Production of Waves

If a stone is dropped in a still pool of water, concentric circles spread out from the point where the stone enters the water. These concentric circles are an example of a travelling disturbance. A travelling disturbance is called a *wave.*

In *transverse waves* (e.g. water waves) the vibration of the particles is *perpendicular* to the direction of the propagation of the waves. In *longitudinal waves* (e.g. sound waves) the vibration of the particles is *in the direction* of the propagation of the waves.

Only *energy is transported by a wave.* The oscillating particles of the medium, which transmits the wave, do *not* travel with the wave.

The *frequency* gives the *number of oscillations per unit time.*

6.1.1 Transverse Wave Using a Rope

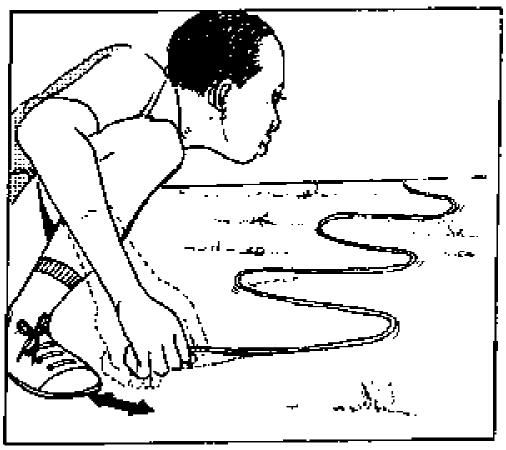

P: Take a piece of rope of about 6 m length. Hold it at one end and jerk it sideways.

Q: What do you observe? Draw a sketch.

E: The disturbance produced by jerking travels along the rope making *crests* and *troughs.* The jerking of the rope acts as a source of disturbance which travels along the rope. The direction of motion of the wave is *perpendicular* to the direction of jerking. Thus is a *transverse wave.*

6.1.2 Tracing a Wave Using a Pendulum Container

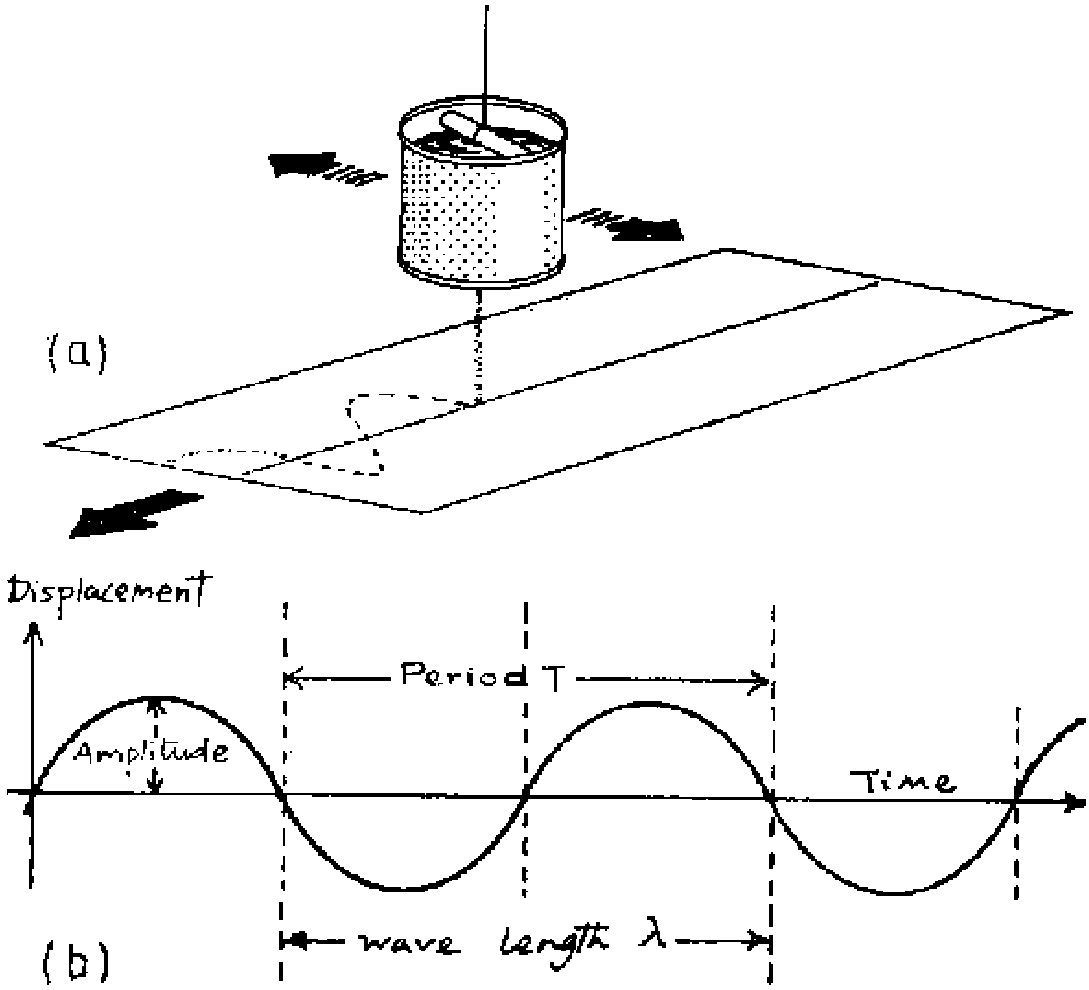

P: Take an empty tin opened at one end. Make a small hole at the other end using a sharp nail. Suspend it using a string so that the bored end faces downwards. By gluing or pinning prepare a 30 x 200 cm sheet of an old newspaper. Fill the suspended tin with coloured water (e.g. using ink) or fine sand (dry). Pull the tin to one side and leave it to oscillate freely. While it is oscillating steadily, pull the paper under the tin with *constant velocity.*

Q: What do you observe? Draw a sketch.

E: When the tin is pulled sidewards, it tries to go back to the equilibrium position and overshoots. As it oscillates the jet from the tin draws a sinus trace on the paper passing underneath it. The resulting trace shows a *transverse wave.*

6.1.3 Sound from a Ruler

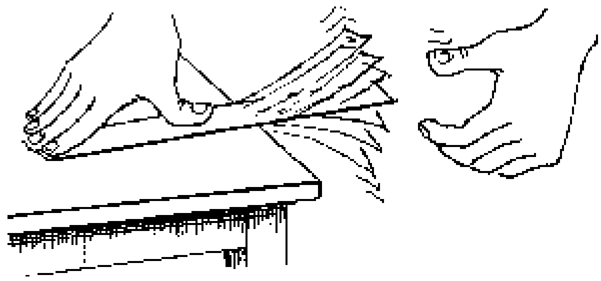

P: Clamp a ruler on a table with its free end protruding. Cause the free length to vibrate and listen to the sound. Repeat this for different protruding lengths of the ruler. Four different lengths are enough.

Q: How does the sound and vibration relate to the protruding length of the ruler?

E: When the vibrating length is reduced, a higher pitch sound is heard and the vibrations become faster and faster. When the vibrating length is increased, a lower pitch sound is heard and large masses of air are set into vibration with large amplitude. Consequently a loud sound is heard. Conversely, short lengths cause small masses of air to vibrate with small amplitudes producing a low sound.

6.1.4 A Transverse Pendulum

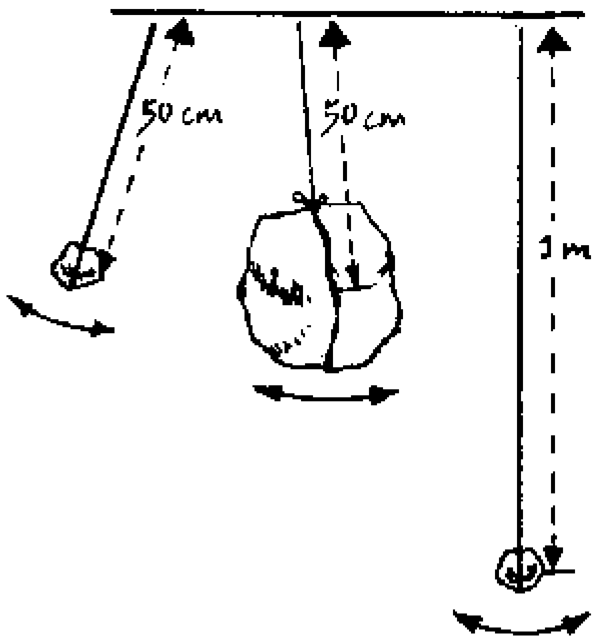

P: Tie a stone to one end of a thread of 50 cm length. Fix the other end of the thread and cause the pendulum to oscillate. Make sure that the displacement is not more than 10°. Record the time for 20 oscillations and find the frequency. (Frequency = number of oscillations ÷ time taken). Change the stone to a heavier one and repeat the procedure. Change the length of the thread to 100 cm and repeat the procedure.

Q: What do you find?

E: The frequency is independent of the mass, but depends on the length of the thread.

6.1.5 A Longitudinal Pendulum

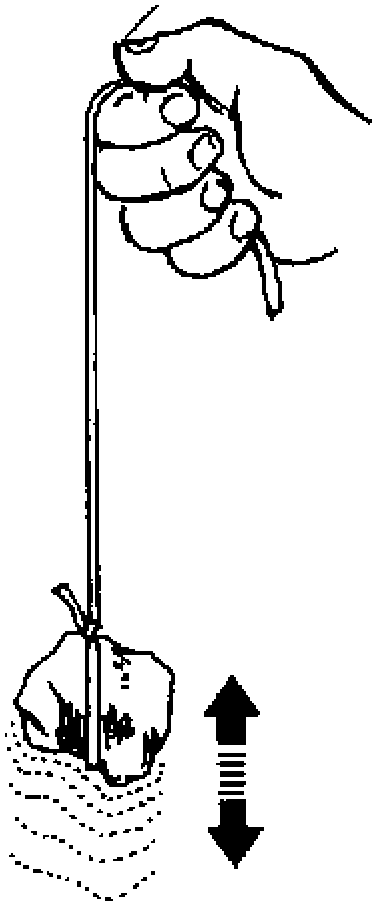

P: Tie a stone to one end of a rubber band and hold the other hand as shown above. Lift the stone up and release it so that it oscillates. Record the time for 20 oscillations. Find the frequency. Repeat the procedure by varying the length of the rubber band and the mass of the stone.

Q: What do you observe?

E: The frequency is independent of the mass but depends on the length.

6.1.6 Sound Vibrations

P: Cover one end of an open tin with a membrane (paper). Fasten it using a string. Spread fine dry sand on the membrane. Speak a soft and a loud sound from the bottom into the tin while your friend is watching the sand.

Q: What does he/she observe?

O: The louder the sound, the larger the amplitude of the vibrations.

E: The air underneath the membrane has been disturbed by the sound waves which in turn disturb the membrane and make it vibrate. This experiment shows that sound travels as a vibration.

6.1.7 Knocking a Water Tank

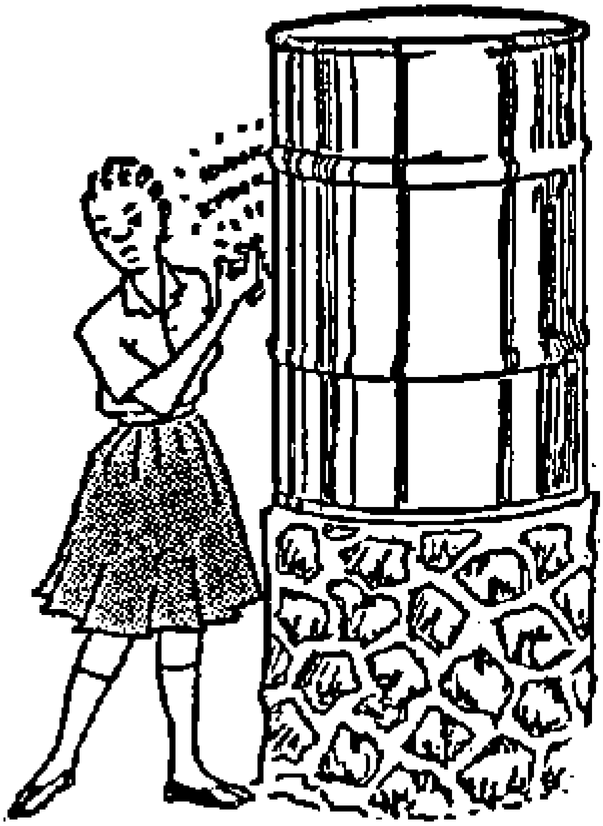

P: Gently knock the side of a wa(...)um from the top downwards to the bottom and listen to the tones (see the figure).

Q: What do you hear?

O: The knock causes the drum to vibrate. At the top, the knocking sets air inside the drum into vibrations giving a loud sound; at the bottom the knocking sets water inside the drum into vibrations giving a soft sound.

A: This can be used to check the presence of liquids in tanks or larger containers.

6.1.8 Waves on a Water Surface

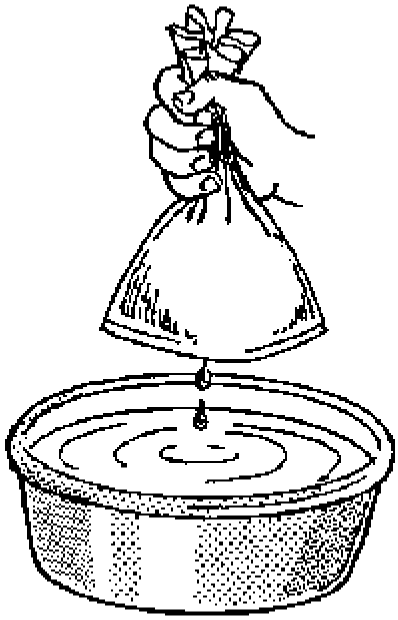

P: Allow the surface of coloured water in a bucket to come to rest. (Ink can be used to colour the water.) Fill a plastic bag with water and make a small hole at its bottom. Raise the bag so that drops of water fall on the surface of the coloured water.

Q: What do you observe?

O: You will see circular waves spreading out rapidly. The drops disturb the water. The disturbance spreads out in concentric circles from the centre. The concentric circles observed are water waves.

6.1.9 Transfer of Energy

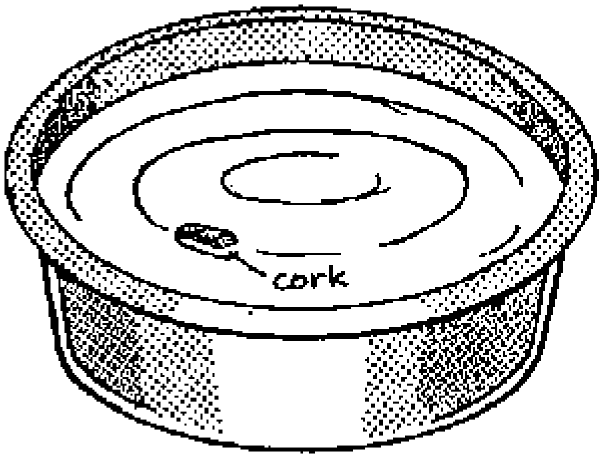

P: Put a small piece of light material (e.g. light wood, polystyrene) on the surface of water in a bowl. With a dropper (see 6.1.8) release a few drops of water onto the centre of the water surface. Avoid wind.

Q: What do you observe?

O: You will see water waves moving from the centre outwards but the pieces of light materia will not travel with the waves.

E: Energy travels with the wave. However, the particles of the wave-transmitting medium (e.g water) do *not* travel with the wave, they only oscillate up and down.

6.1.10 Transfer of Energy

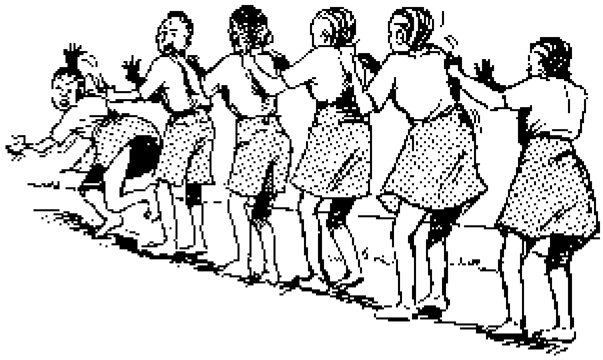

P: Line up a group of students and ask each student to place his/her hands on the shoulder of the student in front with the elbows kept bent. Tell the last student to push forward.

Q: What do you observe when one after the other student pushes?

O: A longitudinal wave moves through the queue.

6.2 Propagation of Waves

Sound does not travel through a vacuum but it requires a *medium* for its propagation. Denser media are better transmitters of sound than less dense media.

Thus, sound travels faster and better in water, wood or strings of various materials than in air.

6.2.1 The String Telephone

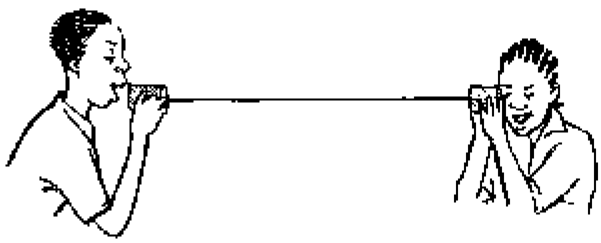

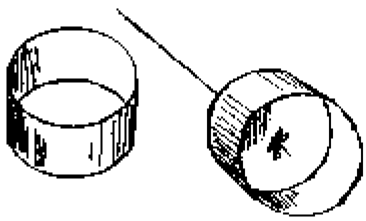

P: Punch a small hole at the centre of the bottom of each of the two empty cans. Connect the cans with a long string knotted inside each can. Hold the cans so that the string is stretched. Talk into one can while your friend is listening (he/she may close the other ear with a finger). Ask your friend to talk to you also and listen to him.

Q: What do you hear?

O: You will hear each other distinctly. Sound has travelled through the string (as a medium) from one can to the other.

6.2.2 Sound Waves in Air

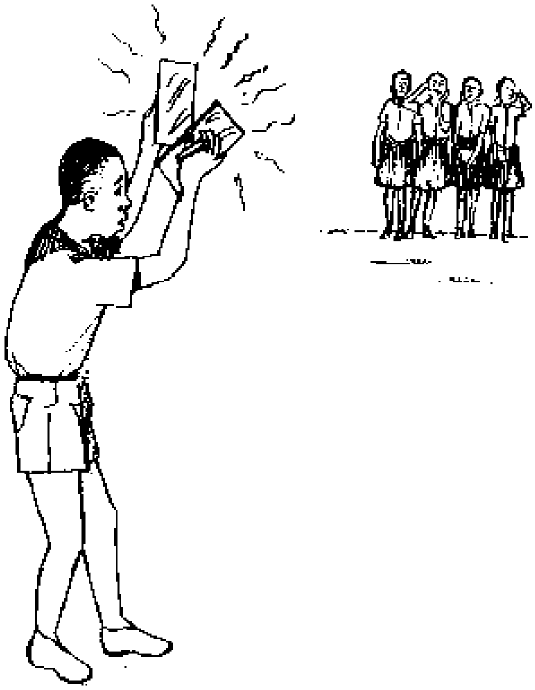

P: One student is standing about 100 m from the class and making sound by clapping two metal pieces (two lids) together.

Q: What do you hear?

O: You will hear a sound. The sound you hear has been transmitted from the source to you by air as a medium.

6.2.3 Sound in a String

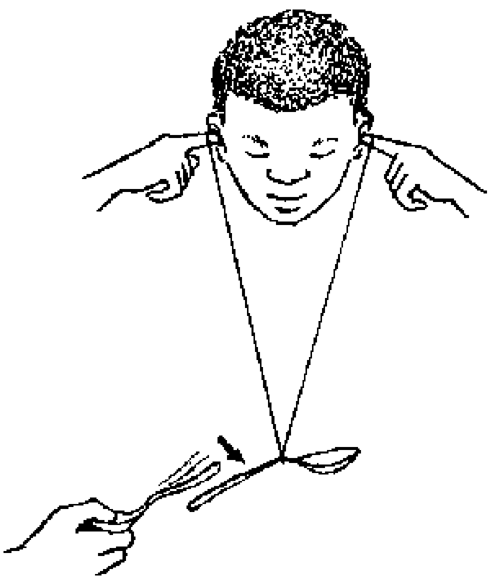

P: Tie a metallic teaspoon at the middle of a one metre long cotton thread. Wind each end of the thread around a fingertip (see figure). Press the fingertips into your ears. Bend down so that the string and the spoon hang freely. Let someone hit the spoon slightly with a nail or another spoon. Listen to the sound.

O: You will hear a chime sound like that of a church bell.

E: Sound travels through the string to your ears. Sound travels better in strings than in air.

6.2.4 Sound in Wood

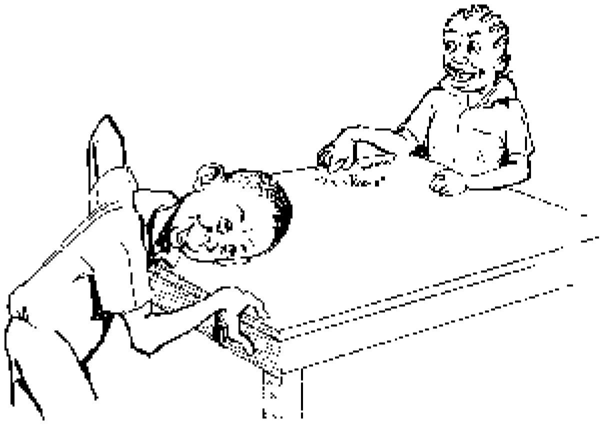

P: Place your ear against one edge of a table while your fiend is knocking the opposite edge slightly. Repeat the experiment by scratching the table slightly. Listen to the sound through air and the sound through the table.

Q: Describe what you hear.

O: The sound travelling through the table is heard more distinctly than when heard through the air.

E: Hence sound travels better in wood than in air.

6.2.5 Sound in Metal

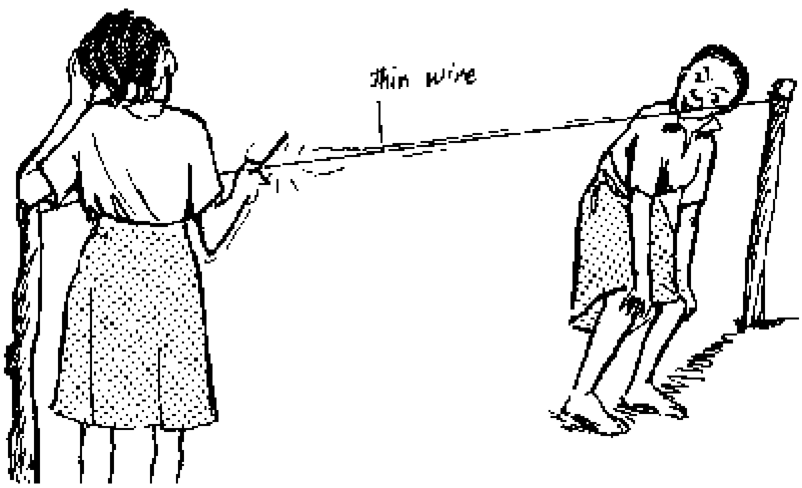

P: Take a long thin wire and fix it to two posts placed about 5 m apart. Tell your friend to be at one end. Then scratch the other end of the wire. Scratch the wire again while your friend has placed his/her ear against the wire on his/her side.

Q: Ask your friend what he/she hears.

O: Your friend will hear nothing unless he/she places his/her ear against the wire.

E: Sound travels better in metal than it does in air.

6.2.6 Sound in Water

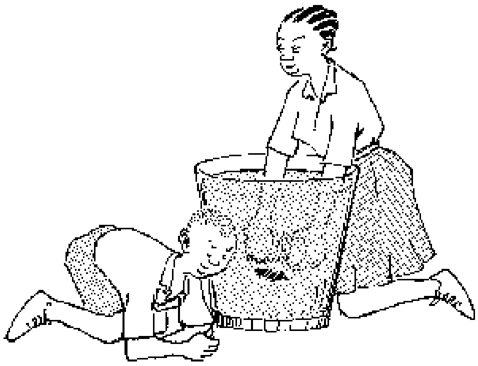

P: Fill a plastic bucket with water. Take two stones and knock them against each other *in the water,* while another person has put his/her ear close to the bucket.

Q: What does he/she hear?

O: He/she will hear the sound coming through the water more loudly.

E: Sound travels better in water than in air.

6.3 Reflection of Waves

When a travelling wave meets a smooth barrier it is reflected. When a wave is reflected, the angle of incidence is equal to *the angle of reflection.*

When a wave is constantly reflected the same way back as it comes to the obstacle (e.g. a wave reflected on the fixed end of a string), a *standing wave* is produced.

Reflected sound is called an *echo.* Ships use *echo-sounding* to determine the depth of the ocean.

6.3.1 Reflection of Water Waves

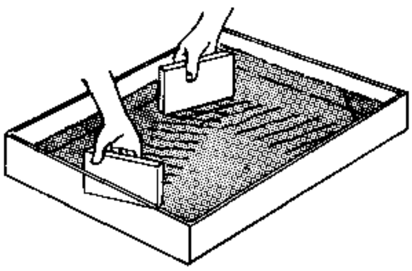

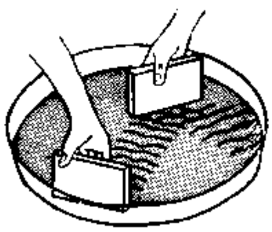

P: Place a straight metal or plastic barrier in the dish containing coloured water. Touch the surface of the water with a rectangular block of wood repeatedly in equal time intervals.

Q: What do you observe?

O: Parallel waves move across the dish and rebound from the barrier.

E: This behaviour is known as *reflection of waves.* When the angle of inclination of the barrier is changed, the angle of reflection remains the same as the angle of incidence. The barrier is acting as a reflector just as a mirror is a reflector of light.

6.3.2 Reflection of Sound Waves

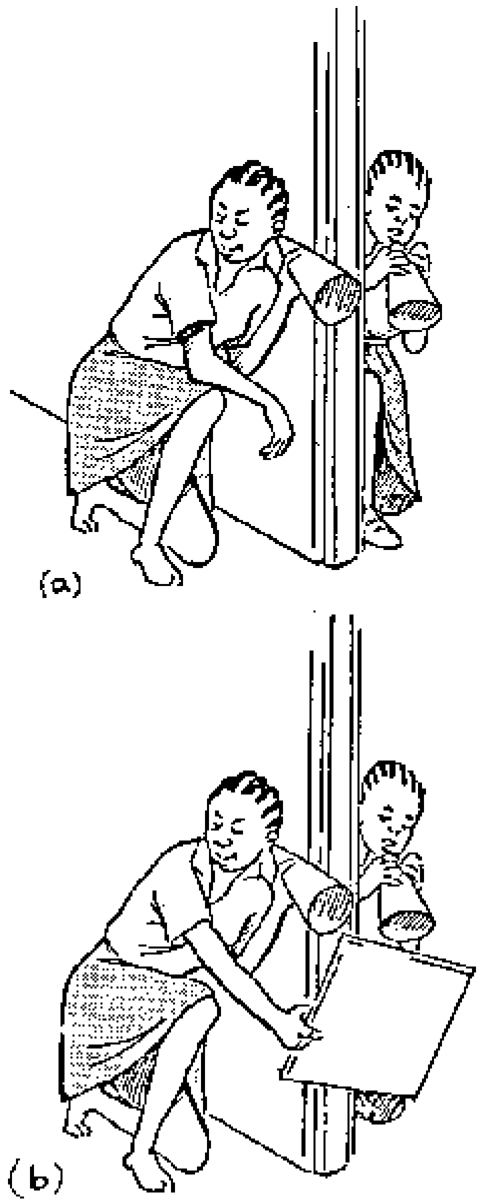

P: You and your friend should stand on both sides of a wall beside an opened door. Ask your friend to whisper into a cone and listen through the other cone, see figure (a).

Q: Do you hear anything?

O: No sound is heard.

P: Repeat the above procedure while holding a smooth cardboard as shown in figure (b). Change the position of the smooth cardboard.

Q: What do you hear?

O: Distinct sound is heard. This is because the whispered sound has been reflected by the smooth cardboard towards the listener.

6.3.3 Reflection in a Rope

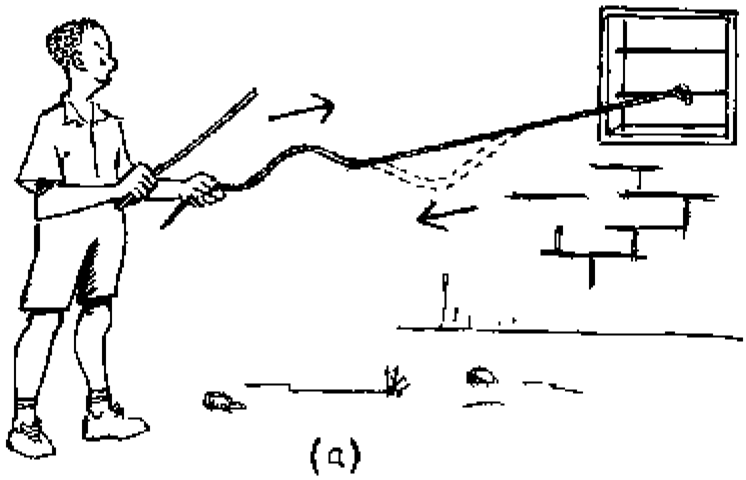

(a)

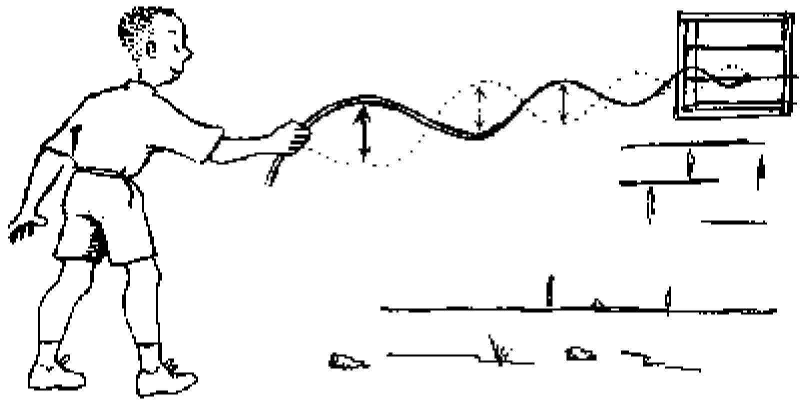

(b)

P: Tie a rope of about 4 metres length on a fixed bar of a window as shown in the diagram. Hit the rope by a stick.

Q: What do you observe?

P: Repeat the procedure above by jerking the rope up and down.

Q: What do you observe now?

O: (a) An impulse travels along the rope and comes back.

E: When the impulse hits the fixed end of the rope, it bounces off and comes back again as shown by the dotted line in the diagram. The reflected impulse has the same shape as the incident impulse, but is inverted, see figure (a). ? Thus, when a wave is reflected on the fixed end of the rope, a *standing wave* is produced, see figure (b).

6.3.4 Reflection in a Hose Pipe

P: Take a long piece of an empty garden hose pipe. Listen at one end of the pipe while your friend is whispering into the other end of the pipe.

Q: What do you hear?

O: The sound is heard more distinctly.

E: When your friend is whispering,, he is sending sound waves into the pipe which are reflected on the walls of the hose pipe. These waves are directed to the other end of the hose pipe where they can be heard.

A: Similarly light can be reflected in a glass fibre. Thus, light pulses may be transmitted by glass fibres. This is used for telephone television etc.

6.3.5 Reflection of Sound Waves: Echoes

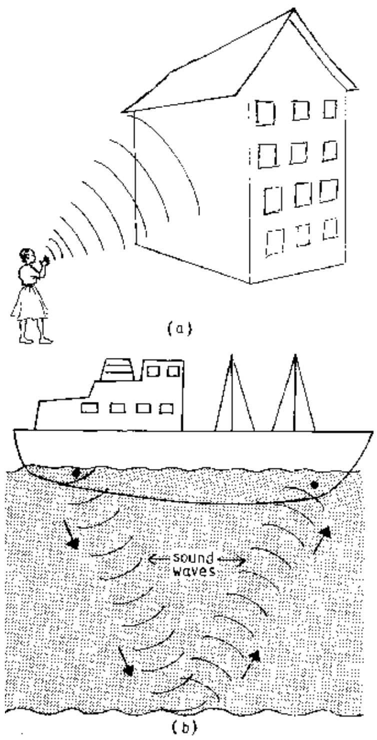

P: Stand near a tall building and call out loudly, see figure (a).

Q: What do you hear?

O: After a short time, the call is heard again.

E: The sound waves have been reflected from the wall of the building. The reflected sound which is heard is called an *echo.*

A: Echoes are used by bats in (ultra sound) navigation. Also echoes are used to determine shoals of fish and the depth of oceans, a phenomenon called *echo-sounding* see figure (b).

6.3.6 Reflection of Sound Waves

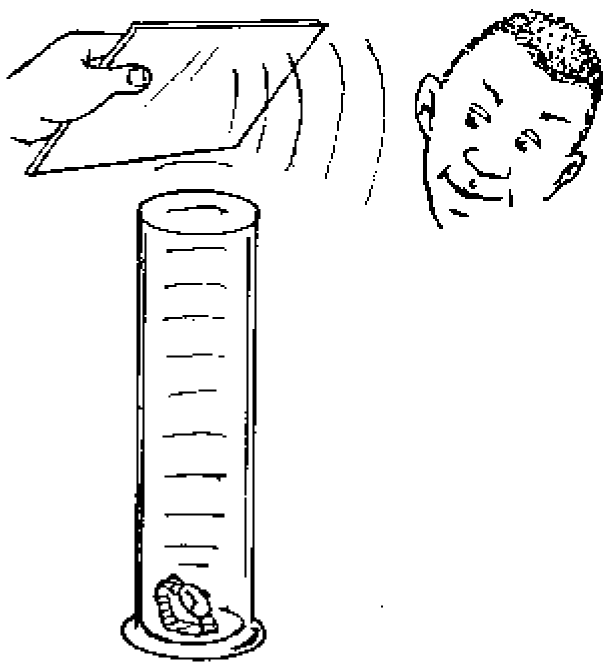

P: Take a tall cylindrical container and put a mechanical clock in it. Place your ear close to the side of the container. Listen to the sound from the clock. Then place a cardboard at slant position about 5 cm on top of the container and listen again (change the position of the board).

Q: What do you hear?

O: In the absence of the cardboard no sound is heard. But in the presence of the cardboard the tick-tack sound is heard.

E: This is because the sound from the clock travels vertically up and is reflected by the cardboard towards the observer.

6.4 Music and Musical Instruments

The human voice is produced by the vibration of the vocal cords. Changes in tension and length produce changes in pitch or tone of the voice. *The less the length and the higher the tension of a cord, the higher the pitch of the tone produced.* The same principle is used to produce music with a *guitar* or a *violin.* The *marimba* and the *xylophone* use sticks or bars of various length or thickness to produce tones of different pitch. The *flute,* the *bottle orchestra* and the *organ* use air columns of various length.

6.4.1 Sonometer (One - String Guitar)

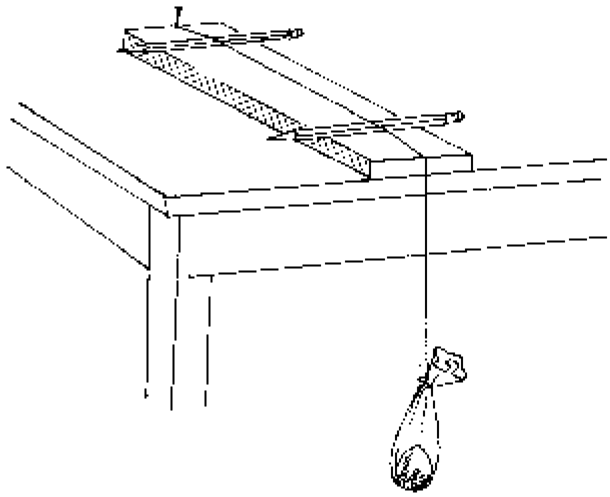

P: Place a soft board on a table. Fix a string with a nail to one end of the soft board. Tie the heavy mass of a stone to the other end of the thread so that the mass hangs below the edge of the table. Insert two pencils under the thread so as to raise the thread off the board. Pluck the thread between the two pencils. Vary

(a) the distance between the two pencils;
(b) the mass hanging.

Q: What do you hear?

O: (a) A higher tone is produced if the distance between the two pencils is reduced.

(b) A higher tone is produced if the mass is increased.

E: The tone which is produced by the vibrating string depends on its vibrating length and the tension of the string.

6.4.2 Bottle Orchestra

P: Take four equal bottles. Leave the first bottle empty. Fill the second bottle a quarter of its volume, the third a half, and the fourth three quarters of its volume with water and blow into the bottles one after another and listen to the tones produced.

Q: Do you notice any difference in sound?

O: The shorter the air column the higher the tones.

A: The organ (used in some churches); the flute.

6.4.3 Marimba

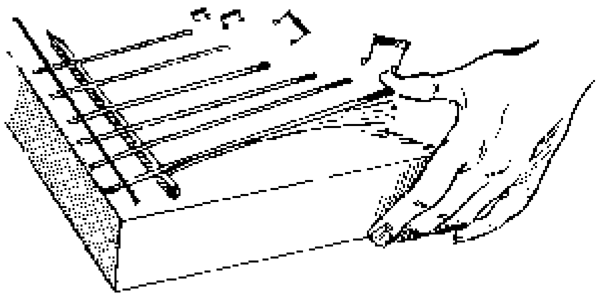

P: Cut bicycle spokes into different lengths. Arrange them on a piece of wood and fix them to it by putting another spoke across them as shown in the figure. Lift the fixed spokes by inserting a pencil under them to raise the free ends of the spokes off the wood. Pluck the free ends one after another and listen to the tones produced.

Q: What do you notice?

O: The plucking causes the spokes to vibrate and produce sound. The longer the spoke, the lower the tone.

A: Grand pianos produce lower notes than normal ones.

6.4.4 Simple Flute (Bamboo Flute)

P: Take a straight bamboo tube of about 1.5 cm diameter and 30 cm length. Clean the knots inside. Dry it until its colour changes to yellowish-brown. Make a mouth-piece and a row of holes as shown in the figure. Blow air into the mouth-piece while closing some of the holes with your fingers.

Q: What do you hear?

O: Different tones are produced by the flute as you remove fingers from different holes.

The pitch of the tones depends on the distance of the first open hole from the mouthpiece, i.e. the closer the hole is to the mouth-piece, the higher the tone produced.

E: Thus, the tone produced is determined by the vibration of air in the column between the mouth-piece and the first uncovered hole.

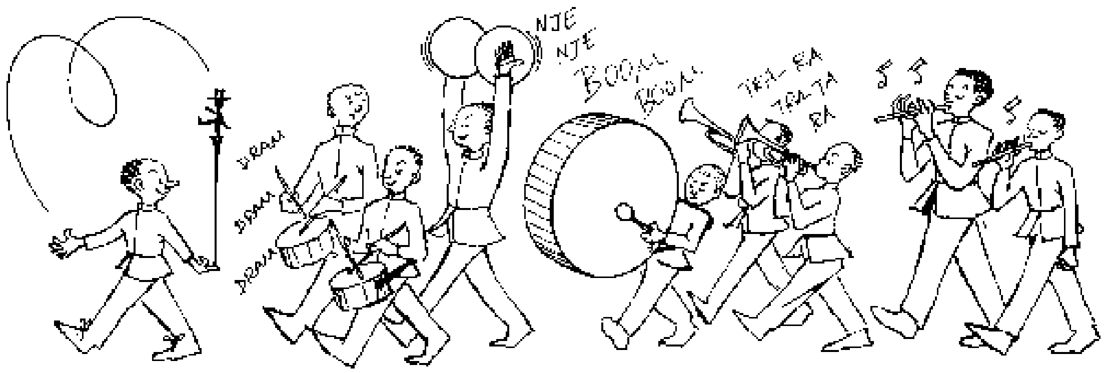

6.4.5 The Violin

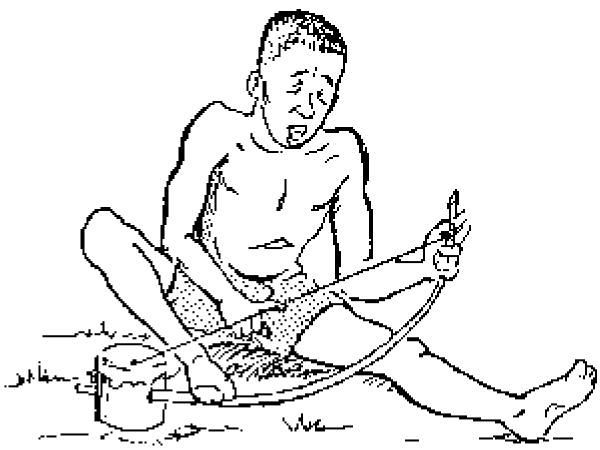

P: Make two holes diametrically opposite each other near the upper open end of a tin and then pass a flexible wooden stick through them so that it just protrudes from the can on one side. Bore a small hole at the centre of the bottom of the can. Fix one end of a string at the hole and tie the other end to the end of the stick which is bent into a bow as shown in the diagram. Make the string tight. Pluck the string repeatedly with a finger as if playing a guitar.

(a) Change the tension by further lightening the string.

(b) Change the length of the vibrating portion of the string by touching the upper end with your finger.

Q: What do you hear?

O: (a) The pitch of the tone produced increases with the tension of the string.

(b) The pitch of the tone produced increases with the decrease of the length of the string.

H: Knotting the string on a nail held horizontally in the bottom of the can helps to anchor the string.

6.4.6 The Xylophone

P: Make a wooden box with the bottom and the top side open. Take timber bars of different types and thickness. Drill four holes into each bar and pass two strings to hold all the bars together on the top of the open box. Beat the bars in turn by using two sticks.

Q: What do you hear?

O: Different sizes of bars give different tones and different types of materials of the same thickness give different tones.

7. Geometrical Optics

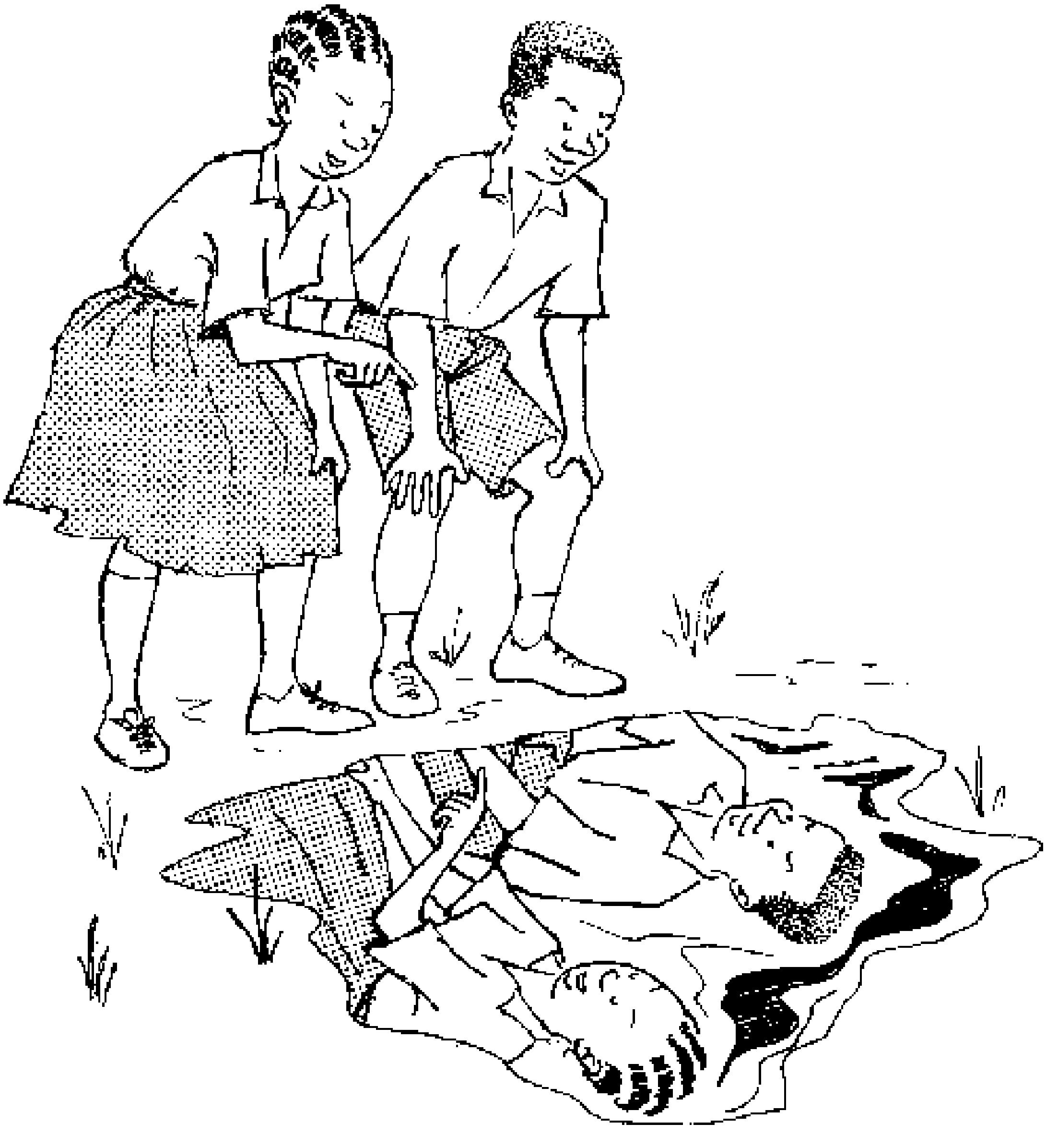

7.1 Nature and Propagation of Light

Light is the energy which is given off by very hot bodies in the form of electromagnetic waves and makes objects visible to our eyes. Light travels in straight lines. Thus, we may use *ray diagrams* in order to explain the *formation of the image in the pinhole camera* or the *formation of shadows* of an object.

7.1.1 Light Travels in Straight Lines

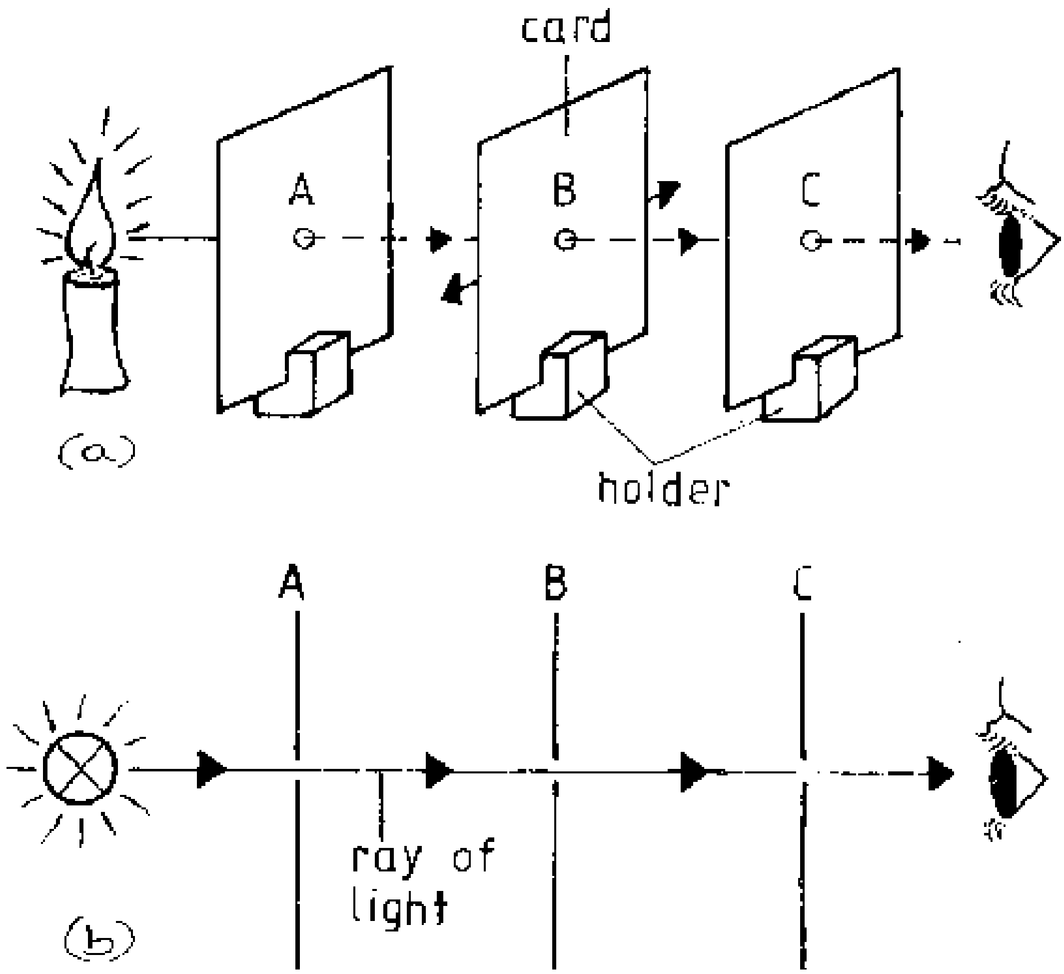

P: Make small holes on pieces of cardboard A, B and C. Place them in front of a source of light as shown. Pass a thread through the holes and pull it at both ends to make it taut. Adjust the cardboards so that all the three holes are in line. Remove the thread. Bring a candle near card A and look through the hole in card C. Record your observations.

Displace anyone of the cards so that the holes are not in alignment.

Q: What do you observe? How can you explain this?

E: The light can be seen from end C only if all the three holes are in line. Displacing any of the cards obscures the ray of light and hence you cannot see the ray as you look from card C.

Hence *light travels in the straight lines.*

Figure (b) shows the same arrangement as figure (a) using symbols which are like the cross-section of the actual apparatus. We call such a figure a *ray diagram.*

7.1.2 The Pinhole Camera

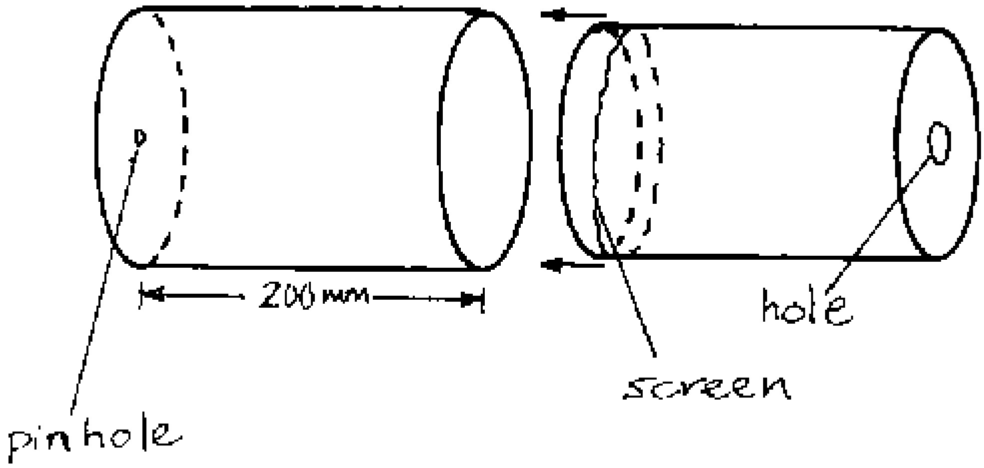

(a)

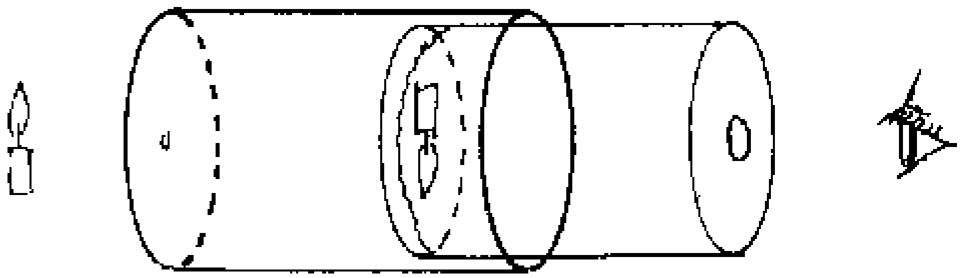

(b)

The pinhole camera is a camera made by using a tin or box with a pinhole at one end.

P: Roll a piece of manila card to make a cylinder. Glue a circular piece of card on one open end of the cylinder and puncture a hole at its centre using a pin. Make a second cylinder which fits tightly into the first cylinder. Cover one end of the second cylinder with a plain paper. The paper acts as a screen for the image which will be formed. Close the other end of this cylinder with a card. At the centre of the card produce a hole of about 2 cm diameter. Through this hole you will observe the image. The card prevents light to enter from this side because the image may be too dim to be seen, if light enters from the side of the observer.

7.1.3 Using a Pinhole Camera

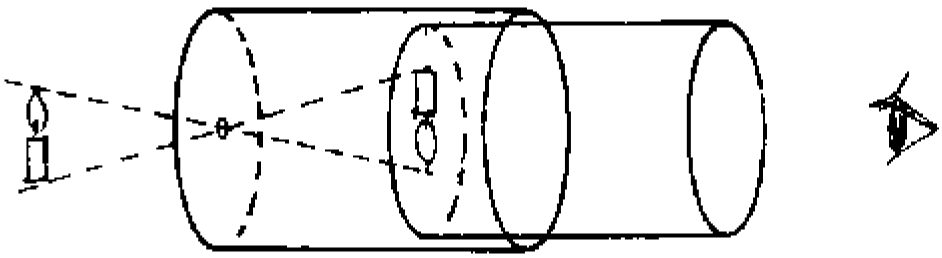

(a)

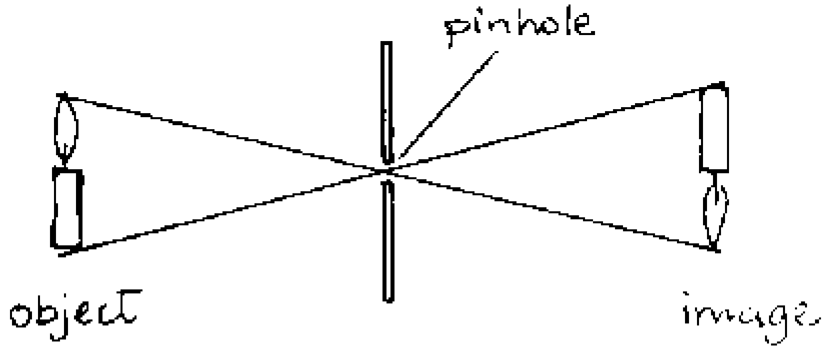

(b)

P: (a) Observe a burning candle using the pinhole camera. Adjust the pinhole-screen distance in order to get a clear, sharp image of the candle.

(b) Change the distance between the screen and the pinhole by steadily pulling the inner cylinder. Observe what happens to the image.

(c) Move the camera slowly away from the candle, and observe what happens to the image.

(d) Make the hole wider. Observe the image.

E: (a) The cone of rays reaching the pinhole from the object (candle) decreases with the distance of the hole from the object. Thus, the image becomes smaller and less bright. It is always an *inversed and real image. An image is real if it can be caught by a screen, since the rays really meet in the various point of the image.*

(b) When the distance between screen and pinhole is increased the image on the screen becomes larger and more blurred.

(c) The image becomes larger and more blurred when the object is closer to the hole and becomes smaller and sharper when the object recedes.

(d) When the hole is made larger the image on the screen becomes larger and more blurred. Generally, *an optical image is sharp when all the rays, coming from one point of the object* to the screen, *meet at one point of the image.* If the rays, coming from one point of the object to the screen, hit several points of the screen, the image is blurred.

7.1.4 Shadows Using one Light Source

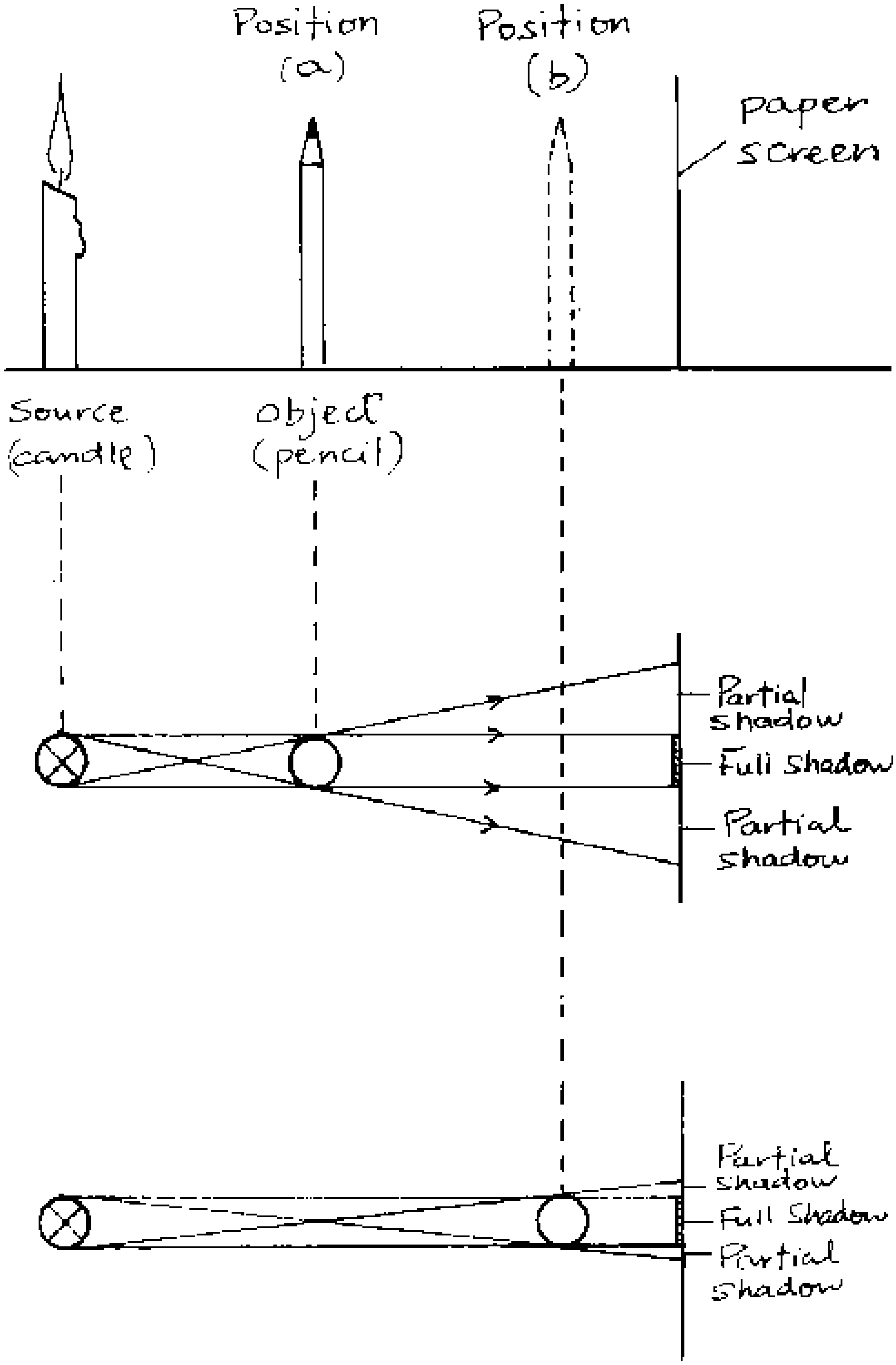

P: Hold a pencil between a source of light (e.g. candle) and a white paper. Observe the shadow formed on the paper (screen).

Gradually move the pencil closer to the screen and observe the change in the shadow.

Q: How does the shadow change?

Explain this with the use of ray diagrams.

E: The shadow becomes sharper as the obstacle (pencil) approaches the screen.

The figures show that *full shade* exists only on those points of the screen, which are *not hit at all by rays* coming from any light source. Wherever points of the screen receive rays from a *part* of the light source only (but *not* from the whole source), there is *partial shade.*

7.1.5 Shadows Using two Light Sources

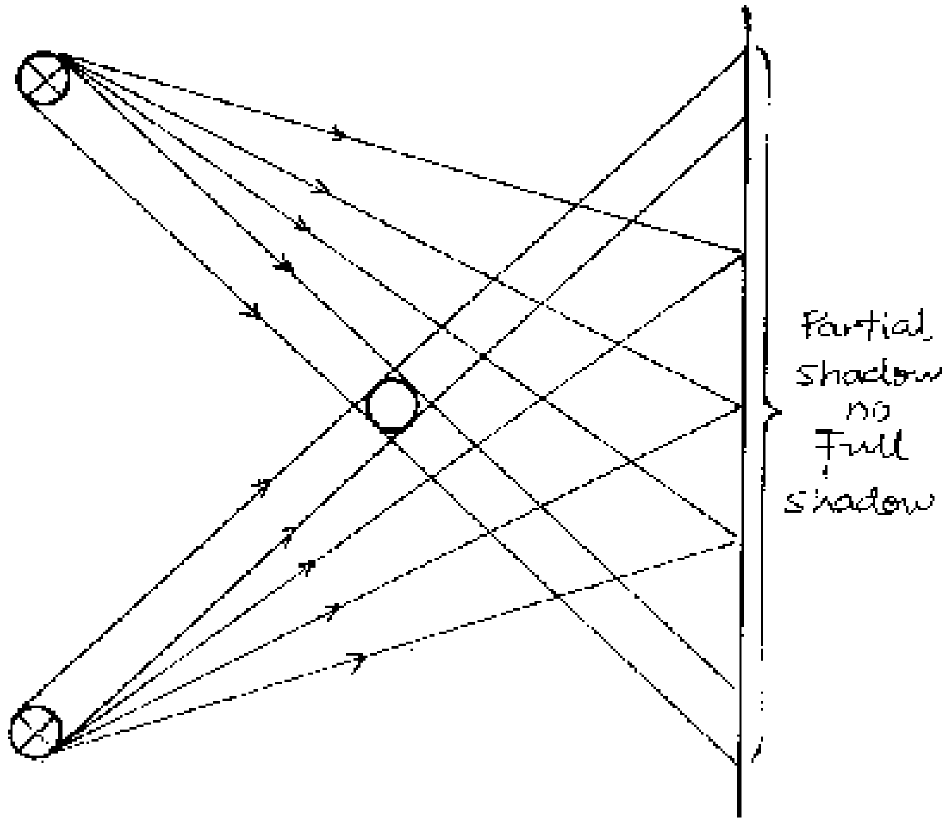

P: Repeat the above experiment using two candles and one pencil. Observe the shadows formed.

Q: Explain the results and discuss the formation of shadows by a point source and extended source of light.

E: The figure shows that all the points of the screen which do *not* receive rays from candle 1, *do receive* rays from candle 2 and vice versa. Thus, full shade does not exist in this experiment (except the object is brought very close to the screen).

7.1.6 Rays in the Smoke Box

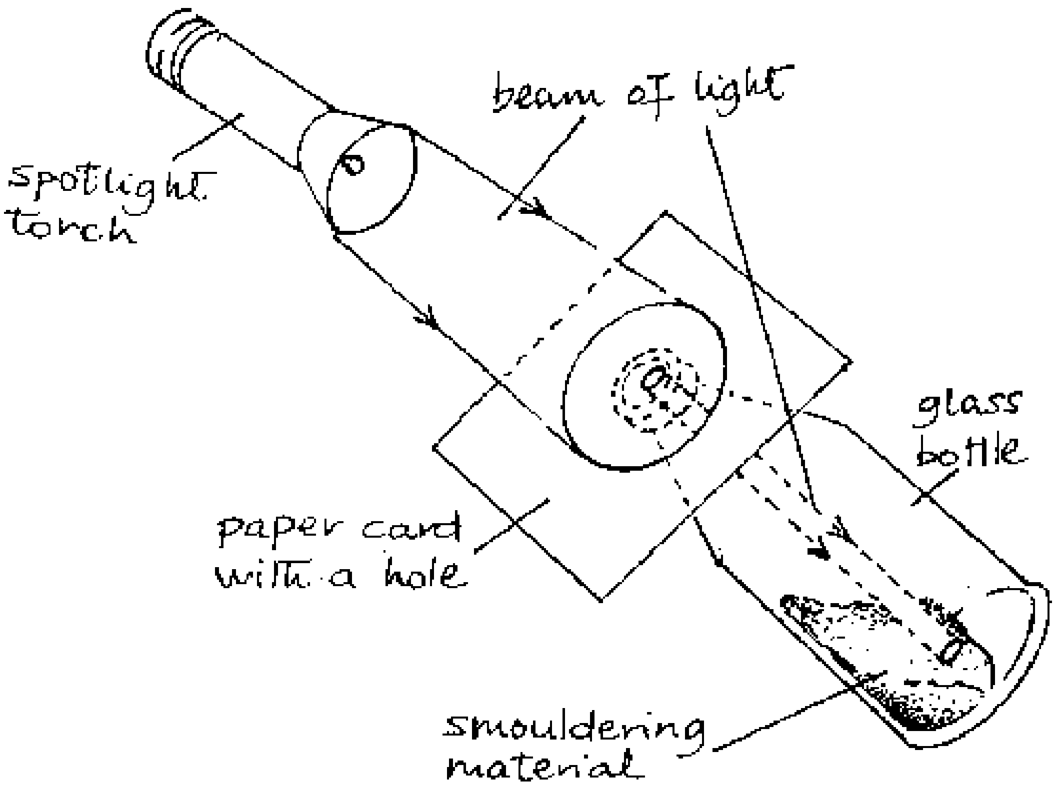

P: Make a smoke box using a glass bottle and some smouldering material e.g. damp paper, cotton wool etc., as shown in the figure.

Produce parallel and divergent beams of light by using small and larger holes in the papercard covering the mouth of the bottle. In a dusty room, parallel, convergent and divergent beams of light can be visible when the floor is swept.

Sunlight or torchlight may be used as a source of light.

Q: How is it possible for smoke or dust to make beams of light visible? Why are sunlight rays parallel?

E: The smoke particles reflect some of the light in all directions and hence make it visible.

Sunlight rays are parallel when they reach the earth, because the earth is 150 million km away from the sun.

7.1.7 Beams of Light

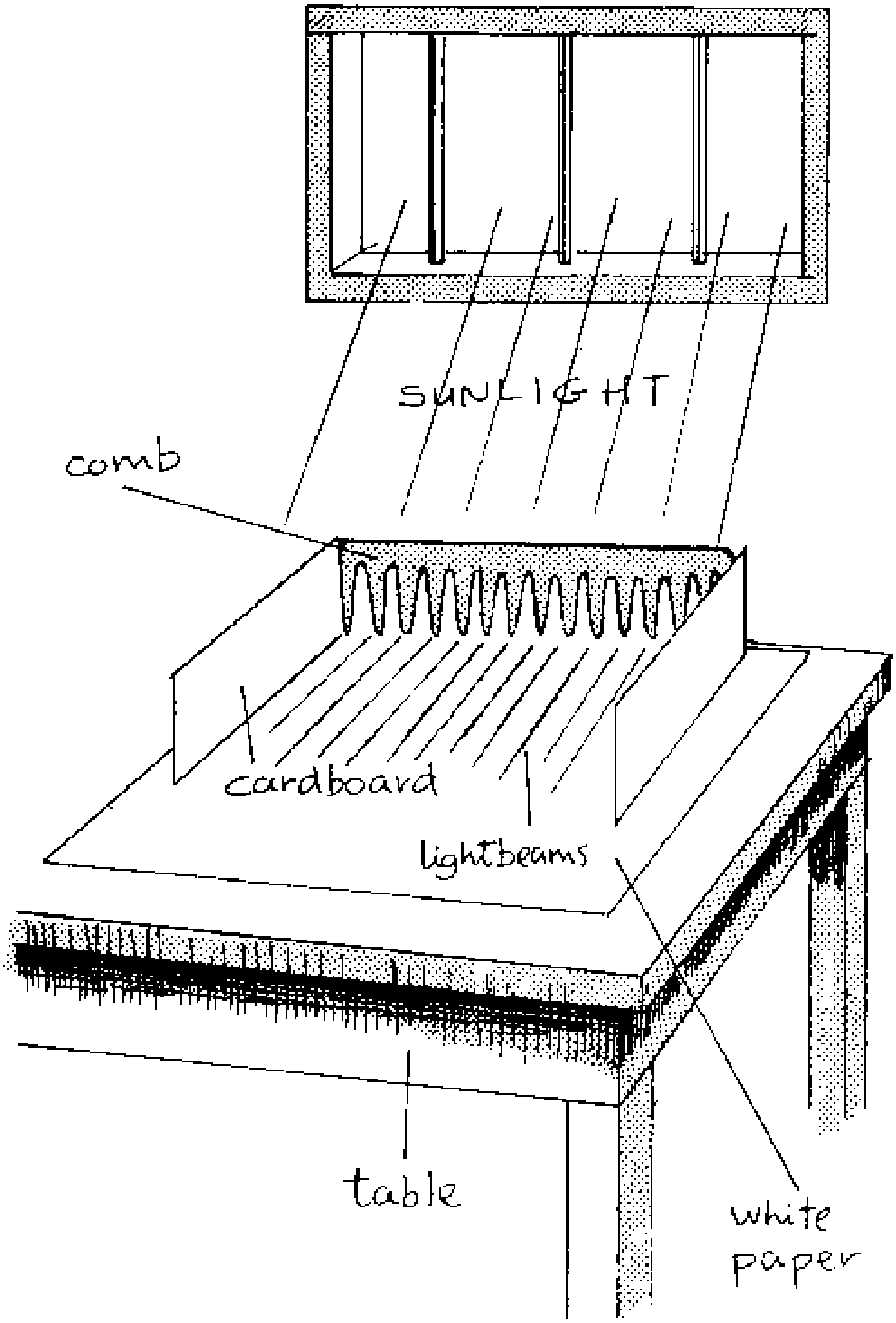

P: Hold a comb on a white paper placed on a table. Place pieces of cardboards by the sides of the comb (see diagram).

Q: What do you observe on this white paper? Explain.

Trace the beams of light which become visible on the white paper. Explain what is meant by the words "rays" and beam of light.

E: A *ray* is the direction of the path taken by light. A collection of rays forms a *beam.*

Since the sunlight consists of parallel rays, *parallel* beames of light will be observed on the white paper.

7.1.8 Shadow Formation by Point and Extended Sources of Light

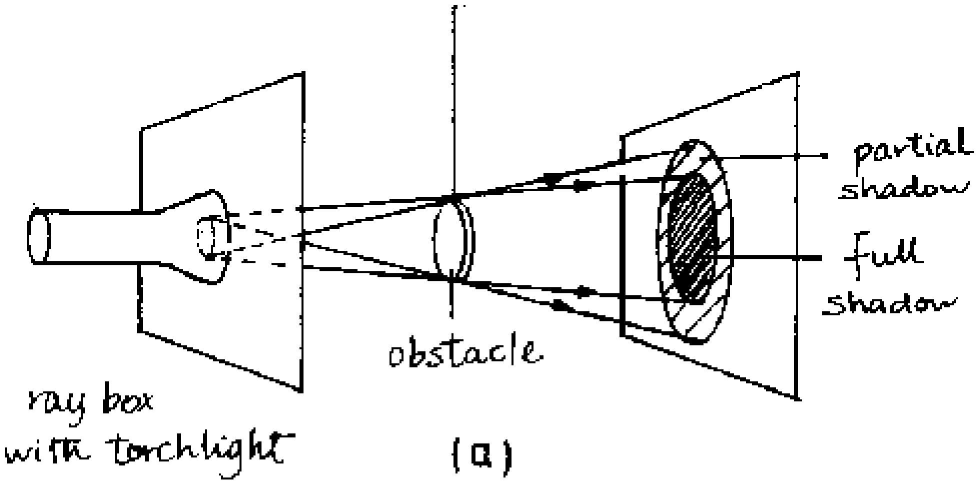

(a)

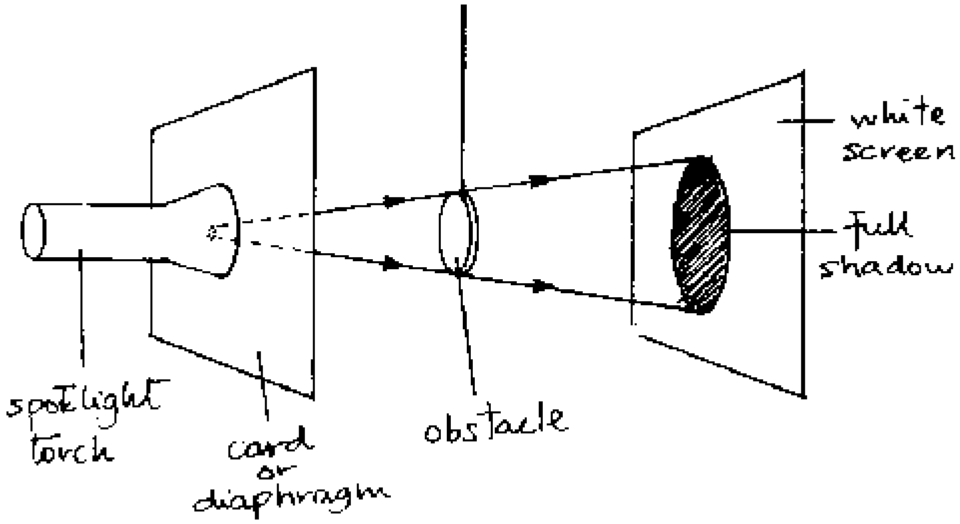

(b)

P: Place a torch light behind a cardboard with a hole in it. The assembly is called a *ray box.* Observe the shadow formed by an obstacle placed in the light from a ray box with a large hole (see fig. a).

Change the hole of the ray box to a very small size and note the shadow formed by the same obstacle on the same screen (see fig. b).

Repeat the above experiments with sunlight.

Q: In which case do you get

(i) full and partial shadow?
(ii) full shadow only?
(iii) Sharper shadows?

Explain why the shadows formed by sunlight are not typical of your results in these experiments.

What do these experiments suggest about the way light travels?

E: All the experiments give evidence that light travels in straight lines.

Single *extended light sources* give partial and full shadows.

Single *point sources* give mainly full shadows. Sharper shadows are obtained when an obstacle intercepts parallel rays, i.e. rays from a distant source. Though the sun is an extended source, its rays reach the earth parallel and therefore produce sharp shadows.

7.2 Reflection of Light

When light strikes a surface separating two different media, part of it is thrown back to the original medium. This phenomenon is called *reflection.*

If the surface is smooth, reflection is regular, otherwise it is diffuse. The position of the object determines the position and attribute of the image.

The *law of reflection* states:

The *angle of incidence is always equal to the angle of reflection.* These angles are always measured *against the normal* of the reflecting surface.

This is sufficient to construct *ray diagrams* for plane mirrors. For *spherical mirrors* the following rules are helpful for the construction of ray diagrams:

(i) *Rays parallel to the axis are always reflected through the principal focus* F.

(ii) *Rays passing through C* (the centre of curvature of the mirror) *are reflected back along their own path.*

(iii) *Rays passing through the principal focus* F *are reflected parallel.* (Reverse light path of (i).)

The distance of F from the mirror surface is called the *focal length* f. For spherical mirrors the *radius of curvature* r is always equal to 2f: r = 2f.

7.2.1 The Kaleidoscope (Inclined Mirrors)

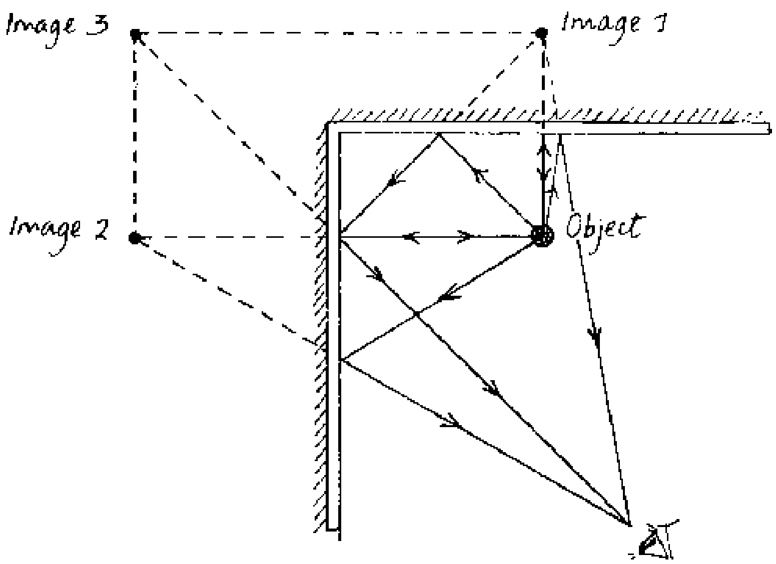

P: Arrange two plane mirrors to meet each other at right angles as shown. Confirm that three images of one object (candle) can be seen simultaneously. Refer to figure.

Repeat the experiment with mirrors at angles of 60° and 30° to each other.

Q: How many images can be seen in each case?

O: When mirrors are at 60° to each other, five images are seen, at 30° eleven images are observed. When the mirrors are parallel to each other, there is a large number of images.

H: Note that the number of images = (360° ÷ angle between the mirrors) - 1

A: The kaleidoscope arrangement is used in shops and pavillions to display items.

7.2.2 The Focus of a Concave Spherical Mirror

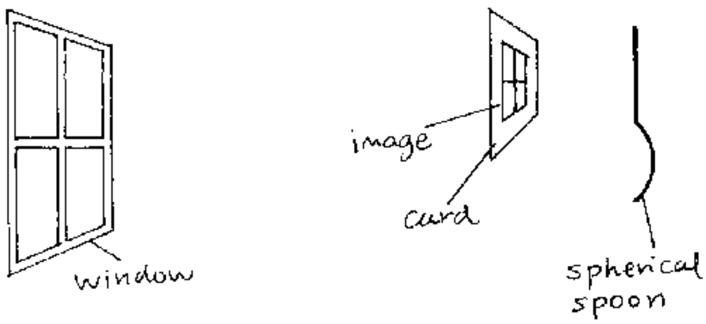

P: A simple concave mirror is the face of a shiny spherical spoon. Hold the curved mirror and a white card in front of the mirror as shown in the figure. Point it towards a distant window, so that it throws the image of the window on the white card. Move the mirror back and forth to find a position where it gives you a clear image on the white card. Note the image distance (the distance from the mirror to the card).

Q: Draw a ray diagram for this experiment. How are the rays coming from the distant window? What does the image distance give in this case?

E: Since the window is distant, its rays meet the mirror parallel. Hence, they are reflected through F. Thus, the image distance recorded give f, the focal length of the mirror.

7.2.3 The Radius of Curvature of a Concave Spherical Mirror

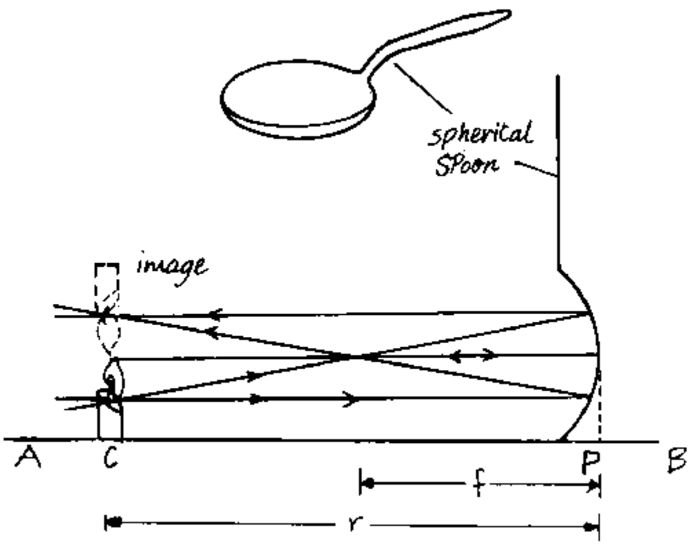

P: Draw a line AB on a white sheet of paper. Place a concave mirror on the paper with its centre vertical above point P. Light a candle and place it in front of the mirror on line AB, see in the figure.

Move the candle back and forth along line AB to get a point C on AB, where the inverted image of the candle coincides with the object candle. Point C is a *point of no parallax* because when you move your head slightly to the left or right, the object and image remain inseparable.

Q: Measure the radius of curvature CP = r. Compare your values of f and r. What do you find out?

Draw ray diagrams to show how the mirror forms images of an object placed at different positions. How would the mirror work best as a shaving mirror?

E: The ray diagram shows that C is the centre of curvature and hence r = 2f.

Ray diagrams show that (i) the *concave mirror* produces a real, inverse and magnified image, if the object is farther away than F from the mirror.

(ii) If the object is nearer to the mirror than F, the image appears to be behind the mirror and is hence virtual. However, it is erect and magnified. In the latter case the mirror works best as a shaving mirror.

A: Shaving mirror, dentist's mirror, floodlight (case (ii)); if the object (bulb) distance = f: torch, car headlight.

7.2.4 Convex Spherical Mirror

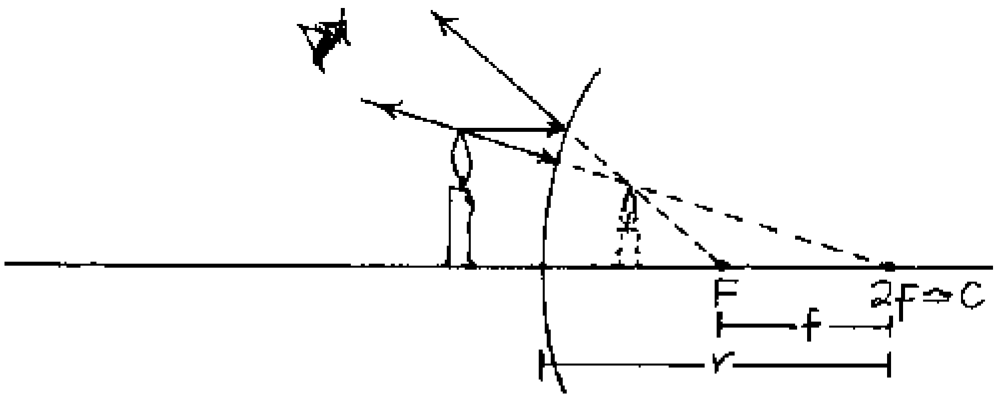

Arrange the back of a spherical spoon (a convex spherical mirror) and a lighted candle on a white sheet of paper. Locate the image formed by use of a needle or a lighted candle held behind the mirror. The image position is the point of no parallax (see 7.2.3) between the image and the locating needle or candle.

Mark the position of the object, the mirror and the image. Measure the object size, the object distance and the image distance.

Draw the ray diagram to show how the convex mirror forms an image (see the figure).

E: The image seen is always virtual, erect and reduced in size.

A: The convex spherical mirror is used as a rearview mirror in cars because it gives a broad field of view.

7.2.5 Candle in Water Experiment

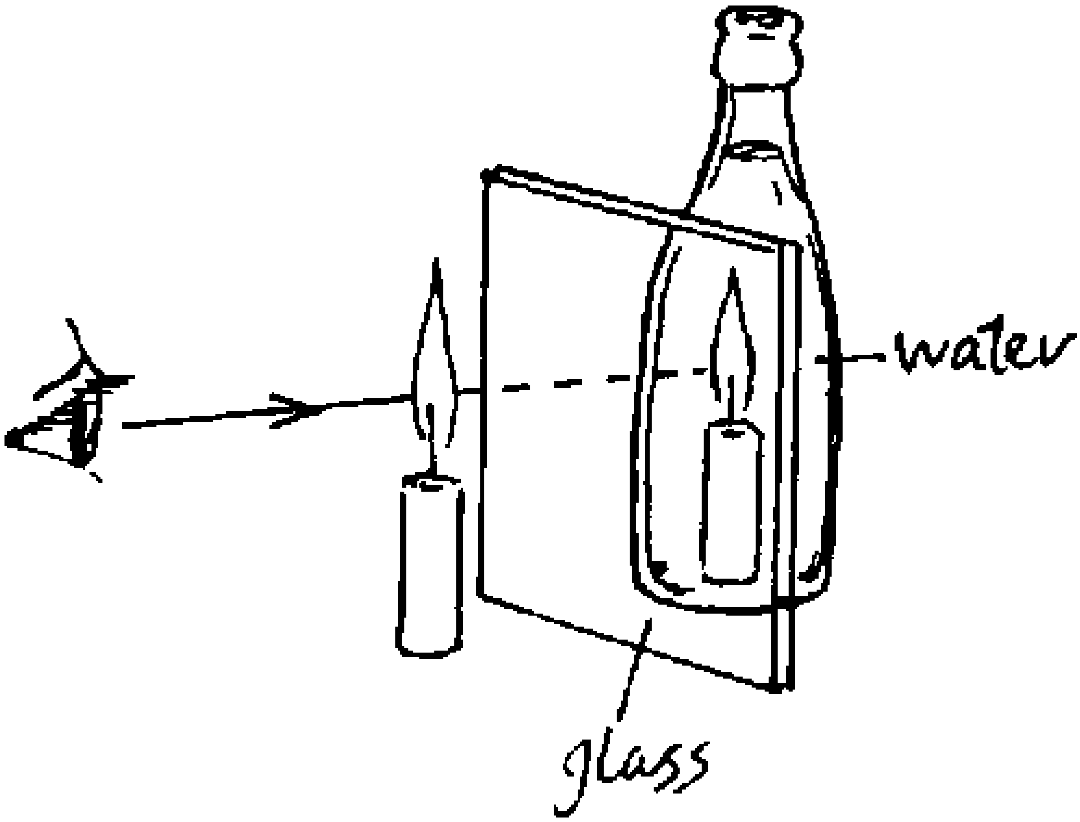

P: Place a transparent glass-pane mid-way between a lighted candle and bottle full of water. View the bottle through the glass-pane from the side of the candle.

Q: At what position do you see the image of the burning candle?

O: The candle appears to bum in the water in the bottle.

Explain this observation using a ray diagrams.

7.2.6 The Periscope

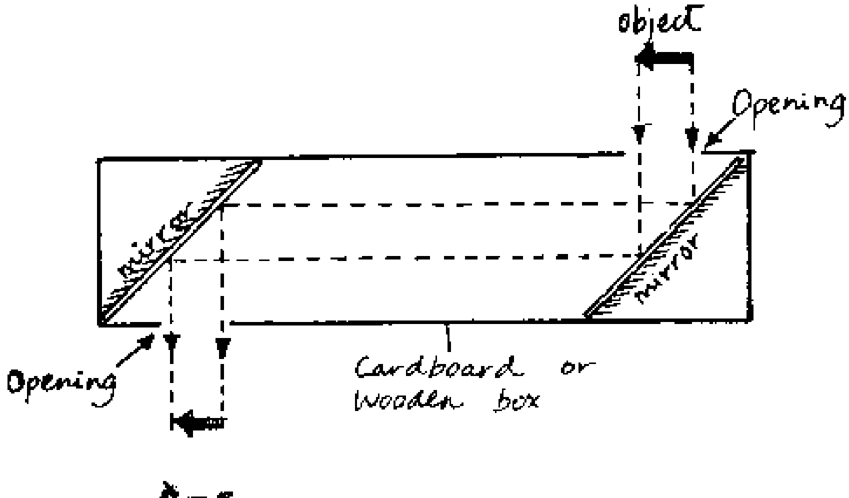

(a)

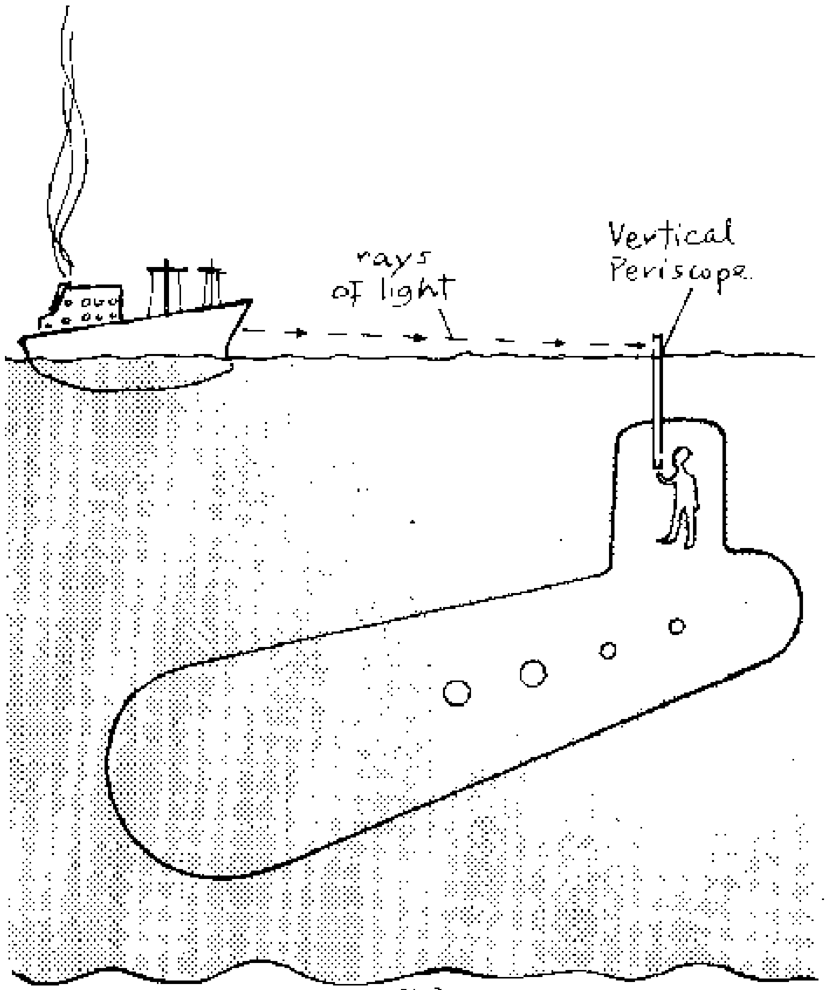

(b)

P: Arrange two mirrors in a rectangular box as shown in figure (a). This instrument is called a *periscope* and allows to observe objects behind corners.

Q: Observe objects placed behind obstacles.

How do they appear?

Write the word OPTICS on a paper and use it as an object. How does the image appear?

Compare your observations with experiment 7.2.7.

A: The periscope is used in dived submarines to see what is above the water surface, see figure (b).

7.2.7 Reversed Image

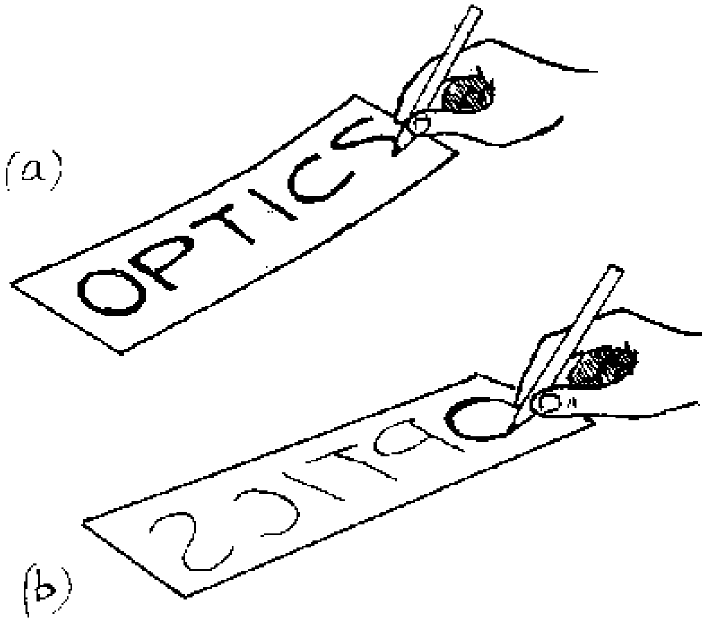

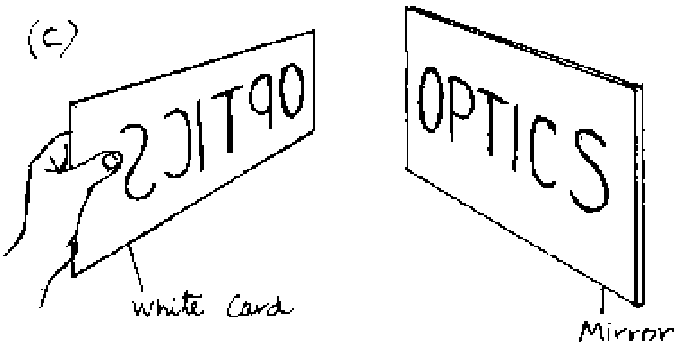

P: Write the word OPTICS on an ordinary piece of paper, see figure (a). Turn the piece of paper and retrace the faint word appearing on its back, see figure (b). You will obtain the *mirror-writing* of the word OPTICS. The latter is a reversed image of the former.

Place the piece of paper in front of a plane mirror (see figure (c)).

Q: What do you see? Repeat using the word at the back side of the paper. What do you see? Compare your observations with those under section 7.2.6. What do you conclude about the mirror image?

E: Mirror images are reversed images, i.e. the left and right side of the object are interchanged.

7.3 Refraction of Light

Refraction is the change in direction of light as it passes from one medium into another of different density. Refraction is used in lenses to produce images in cameras, microscopes, telescopes, etc. *Total internal reflection* takes place on the boundary between an optically denser medium (e.g. glass) and an optically less dense medium (e.g. air), when the angle of incidence in the denser medium is greater than the *critical angle.*

7.3.1 The Rising Coin

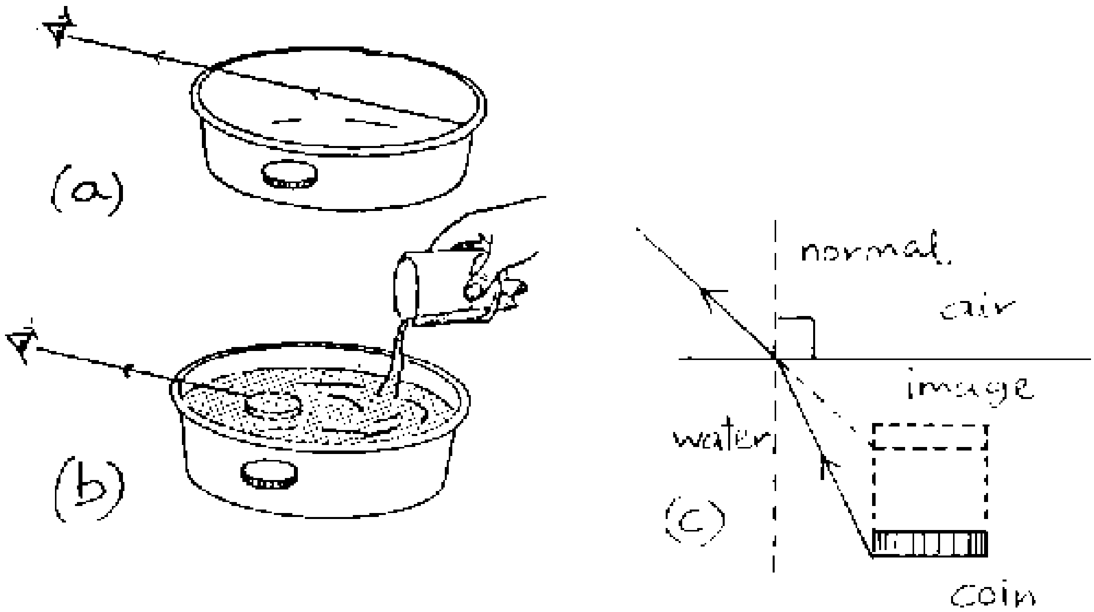

P: Put a coin in the lid of a jam jar.

Hold the lid up to almost level of your eye, until you just cannot see the coin in the bottom of the lid. Gently pour water in the lid to cover. the coin completely. The coin will be visible to you again, see figures (a) and (b).

Q: Explain your observation with the use of a ray diagram.

E: The ray diagram of figure (c) shows that we can only see the coin because the light rays coming from it are deflected at the water surface away from the normal of the water surface.

P: Lower the lid and look at the water vertically from above

Q: Where does the coin appear now?

Explain the observation.

O: When viewed vertically from above the coin appears to be at the bottom of the lid. However, the bottom seems to have rised because of the refraction of those rays which reach the water surface under an angle of incidence different from 0°.

P: View the coin from different directions.

Q: How does its position seem to change?

E: When viewed at an angle from the vertical the coin appears to be raised above the bottom of the lid, therefore as the viewer changes position the coins position also seems to change because of the refraction.

7.3.2 Total Internal Reflection

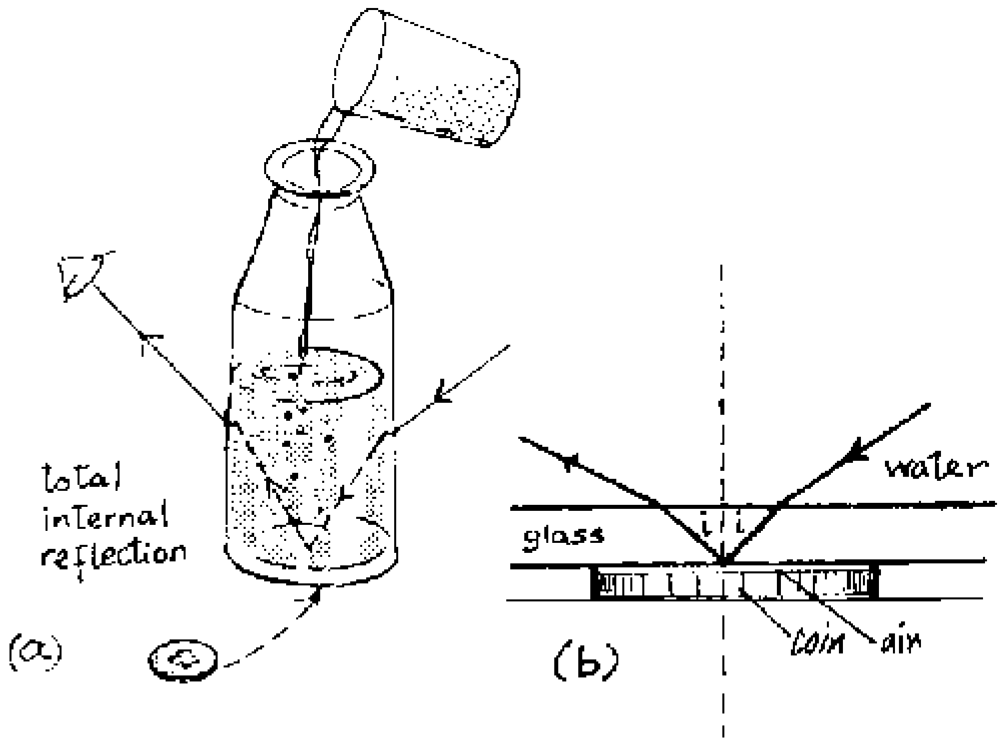

Place a transparent bottle on a coin and look at the coin from above at an angle from the normal. The coin can be seen. Pour water into the bottle slowly. There is a level at which, when you look at the coin, it disappears from sight, see figure (a).

This phenomenon is called *total internal reflection.* It is a special type of refraction. In our experiment, it takes place at the bottom of the bottle where the glass borders the air (above the coin). Total reflection only takes place on a boundary between an optically denser (e.g. glass) and an optically less dense medium (e.g. air) when the angle of incidence in the denser medium is greater than the *critical angle.* In our case the light rays coming from the right side into the glass of the bottom of the bottle are totally reflected and then coming to your eye, see figure (b). These rays are *not* refracted to the air outside the bottom of the bottle because their angle of incidence i is larger than the critical angle for a glass/air boundary which is 42°. These totally reflected rays are so strong that they completely cover the relatively weak rays coming from the coin. Hence, the coin cannot be seen any longer.

A: Prisms in binoculars, etc., see 7.3.6.

7.3.3 Bending a Pencil with Water

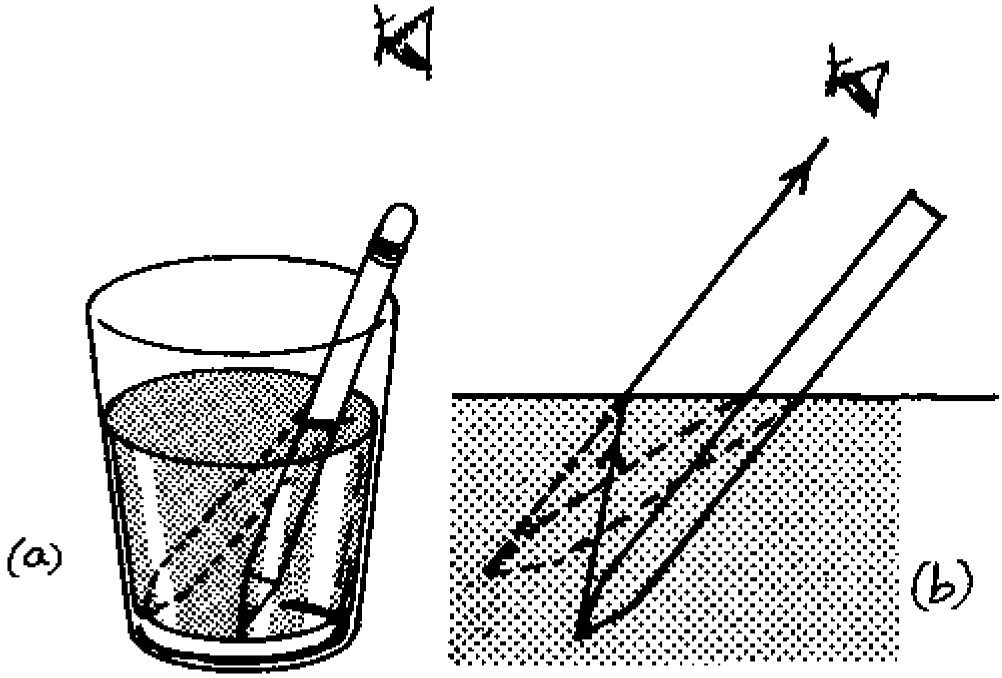

P: Pour water in a glass. Place a pencil in the water at a slant position, see figure (a). Look at the pencil through the surface of the water sidewise along its length and note what you see. Explain your observation by using a ray diagram.

E: Figure (b) gives the ray diagram which explains the observation that the pencil seems to be bent by refraction.

7.3.4 The False Pin

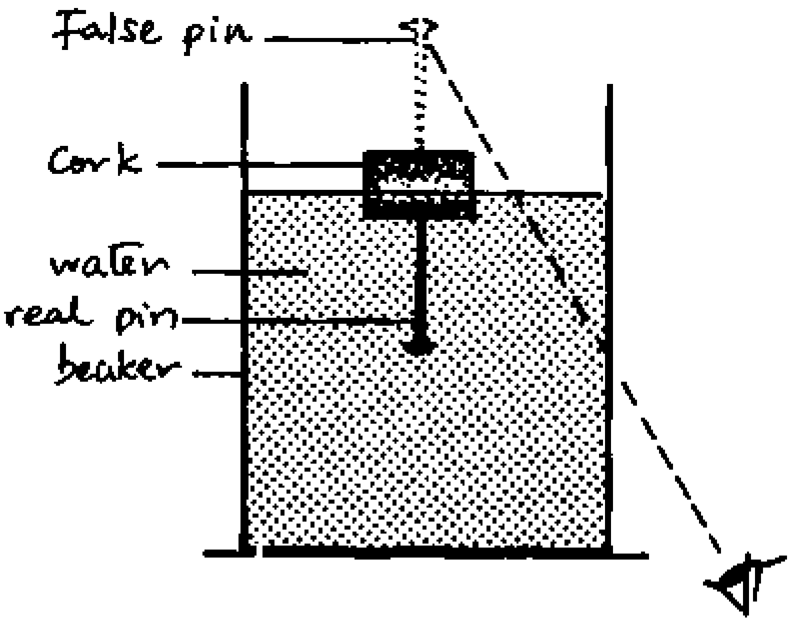

P: Stick a pin (office pin) into the underside of a small cork and allow it to float in a beaker full of water.

Hold the beaker above your head and look up through the side of the beaker at an angle from the vertical.

Q: What do you see?

O: You will see the real pin below the cork and a fake pin above the cork.

7.3.5 Explaining the False Pin

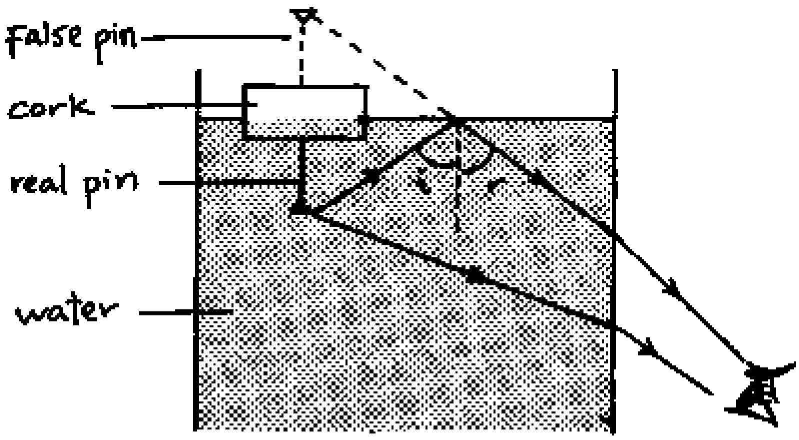

Draw a ray diagram and explain how the false pin appears on top of the cork.

E: Some rays from the pin towards the eye are refracted at the glass-air boundary making the pin visible to the eye.

Other rays from the pin undergo total internal reflection at the water-air boundery. The reflected rays are refracted at the glass-air boundary before they reach the eye. Hence the eye sees a virtual image of the pin on top of the cork as shown in the figure.

Hence both the real pin and the false pin can be seen by the observer.

7.3.6 Total Internal Reflection in Prisms

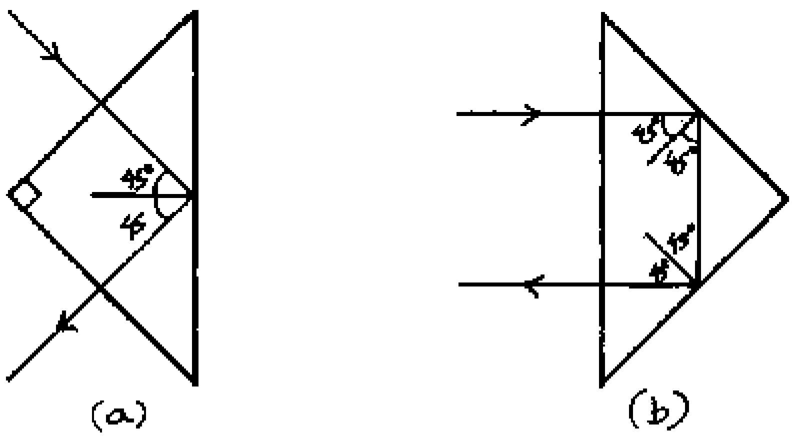

P: Total internal reflection occurs when light falls on a glass prism with angles of 45°, 45° and 90°. This is because a ray falling normally on any face of such a prism hits the inside face at 45°, and this is greater than the critical angle of glass/air (about 42°). In figure (a) the ray is turned through 90° and in figure (b) through 180°.

A: Totally reflecting prisms are used in periscopes (instead of mirrors) and in binoculars.

7.4 Lenses and Optical Instruments

Any transparent material bounded by at least one curved surface acts as a lens. Common examples of lenses are made of glass. By their action on rays of light lenses can be put into two groups: the converging and the diverging lenses. *A converging (convex) lens* is thickest at its centre whereas this is where the *diverging (concave) lens* is thinnest. The action of a lense is due to the refraction of the rays on its curved boundaries. For the construction of *ray diagrams* for *thin* lenses the following rules are helpful:

> *For both types of lenses: rays passing through the centre of the lens travel straight on,* see figure (a).
>
> *For convex (converging) lenses: rays parallel to the axis are refracted through the principal focus* F, see figure (b).
>
> *For concave (diverging) lenses: rays parallel to the axis are refracted away from the nearer principal focus* F, see figure (c).

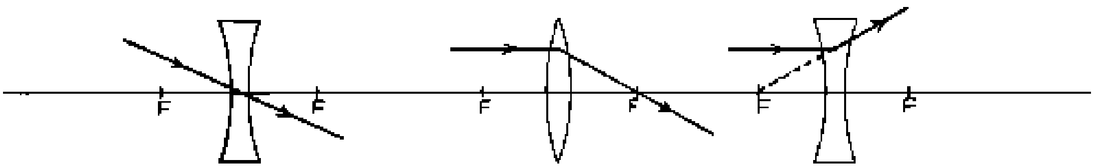

(a) (b) (c)

7.4.1 Action of a Convex Lens on Parallel Rays

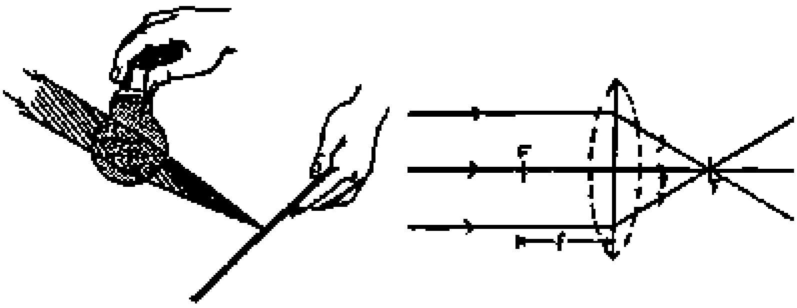

(a) (b)

P: Hold a water filled opened bulb (see appendix) or a concave lens into the direct sunlight and focus the light on one spot of a paper.

E: The distance between the centre of the bulb or lens and that spot on the paper is called the *focal length* f. We can draw a ray diagram for this experiment, see figure (b). The focal points are denoted as F. The action of the lens or bulb on the rays is explained by refraction of the rays on its curved surfaces.

H: The bulb is *not* a *thin* lens. Hence the focus is not as sharp as with a thin lense.

7.4.2 Action of a Concave Lens on Parallel Rays

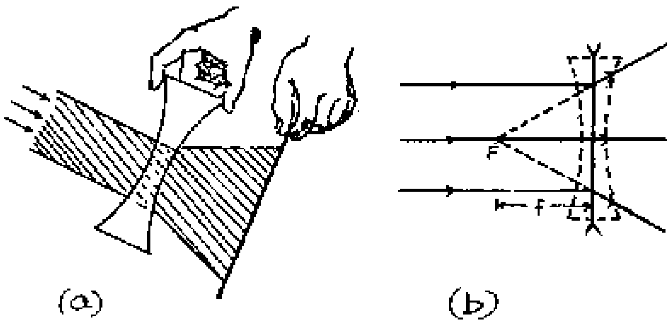

P: Try to repeat experiment 7.4.1 using a concave lens. If that is not available, the base of a soda bottle or a thin film of water on a wire loop also can serve as a concave lens.

Q: What do you observe? Do you find a focal point?

O: No focal point can be found.

E: This lens *diverges* the light and hence no real focus exists.

However, the ray diagram (see fig. b) shows that a *virtual* focal point can be found on the same side of the lens on which the light source is.

7.4.3 How to Construct a Simple Box Camera

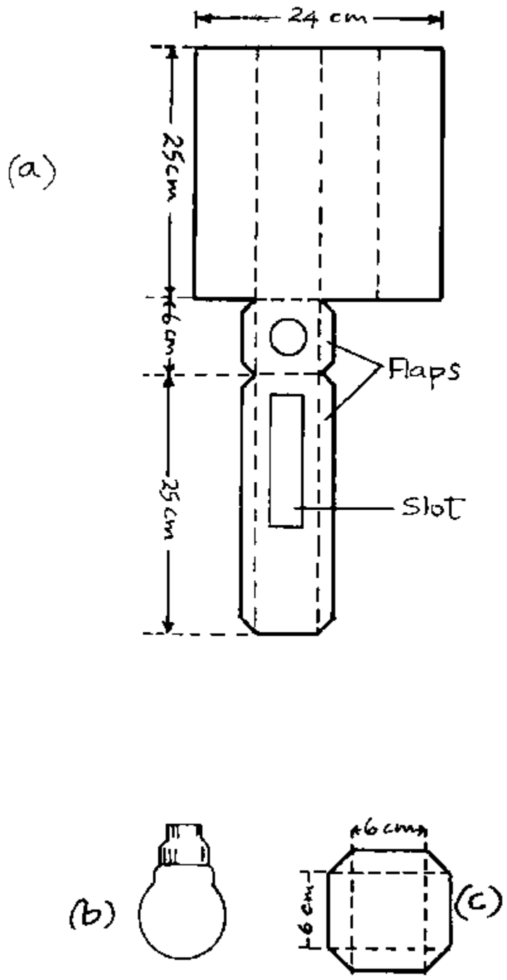

P: (i) Cut a piece of manila sheet according to the plan of a rectangular box in figure (a).

(ii) Open the bulb seal of a transparent used up electric bulb and remove the filament. Then fill it with water to make the water lens (see appendix).

(iii) Fold the manila sheet cutting (figure (a)) along the dotted lines. Fit the water lens on the slot and close the box by gluing the flaps.

(iv) Cover the open end with a piece of plain paper or (better) parchment paper as a screen using glue (see figure c).

(v) Close the slot using a sliding manila sheet cover, having dimensions of 6 cm by 30 cm with a hole to fit the bulb at its centre.

H: Make sure that the box is light-tight (light-proof).

7.4.4 Using the Simple Box Camera

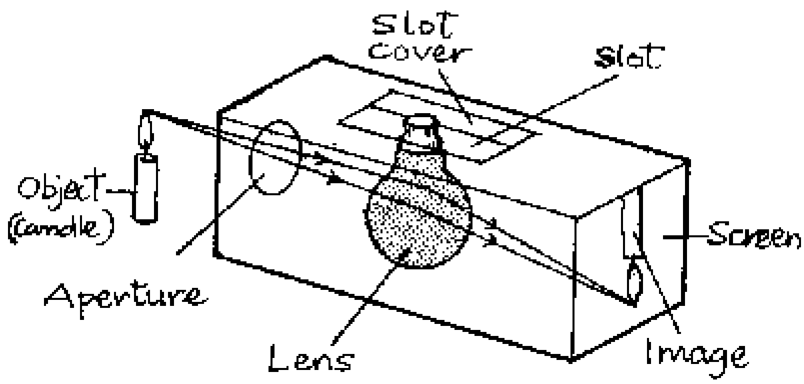

P: Use the simple box camera to produce images of illuminated objects like a candle, a window etc. Change the position of the lens (bulb) so that you obtain a sharp image on the screen.

(i) Find the focal length f of the lens (bulb) by focussing a distant object (e.g. a distant window) on the screen. Then the image distance v is equal to f. Measure the image distance v on top of the camera from the centre of the bulbs neck to the screen.

(ii) Choose a large object distance u of a lit candle (the distance between the centre of the lense (bulb neck) and the candle) and adjust the lens so that you obtain a sharp image on the screen.

(iii) Now decrease the object distance by moving the camera towards the object and adjust the image distance each time.

(iv) Note u and v at which the image size becomes larger than the object size.

Q: Why is v = f in case (i)? How is the image distance v in each case? How is the size of the image (e.g. of the candle flame) as compared with the size of the object in each case? What kind of image do you obtain?

E: (i) v = f because the rays coming from a distant object are parallel.

(ii), (iii) The size of the image grows larger as the object distance u decreases. First the image size is smaller than the object size. When u = 2f, then the image size is equal to the object size. All images are *real* because they appear on a *screen.*

(iv) When 2f > u > f, then the image size is larger than the object size. When u < f, no *real* image can be observed.

H: The bulb is no thin lens hence the image will not be as sharp as with a thin lens which may be obtained from TAN OPTICS, P.O.B. 1929 Moshi, Tanzania.

A: (iii) Photographic cameras, (iv) projectors for movies and slides.

7.4.5 Ray Diagrams for the Box Camera

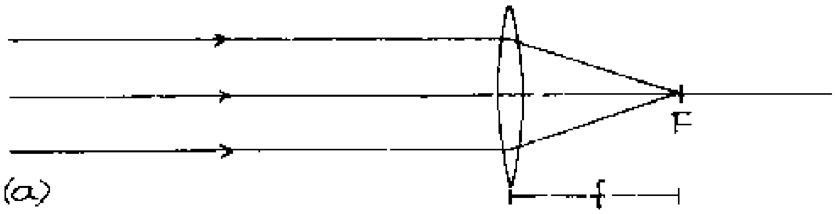

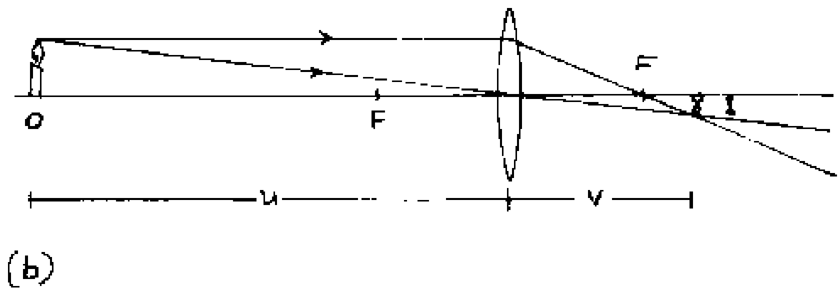

P: Ask the students to draw ray diagrams using thin converging (convex) lenses for the cases (i) to (iv) of experiment 7.4.4.

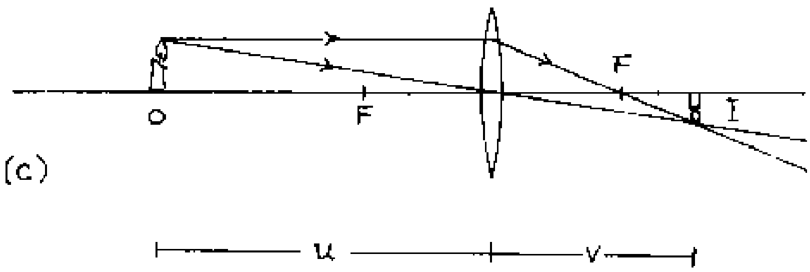

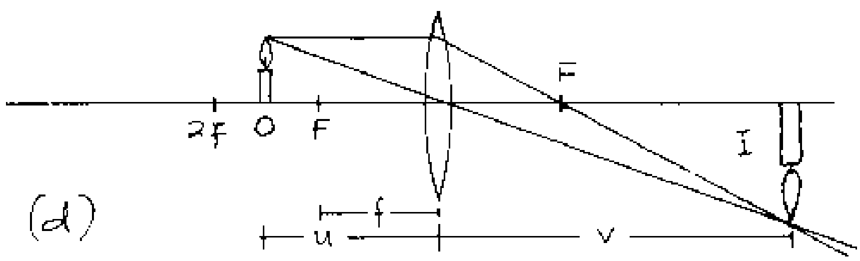

E: See figures (a) to (d) which correspond to the cases (i) to (iv) of experiment 7.4.4.

7.4.6 Magnification

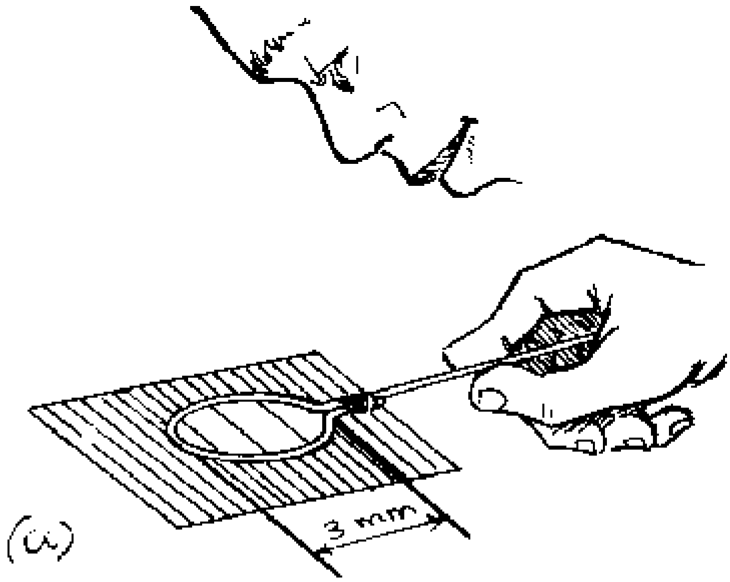

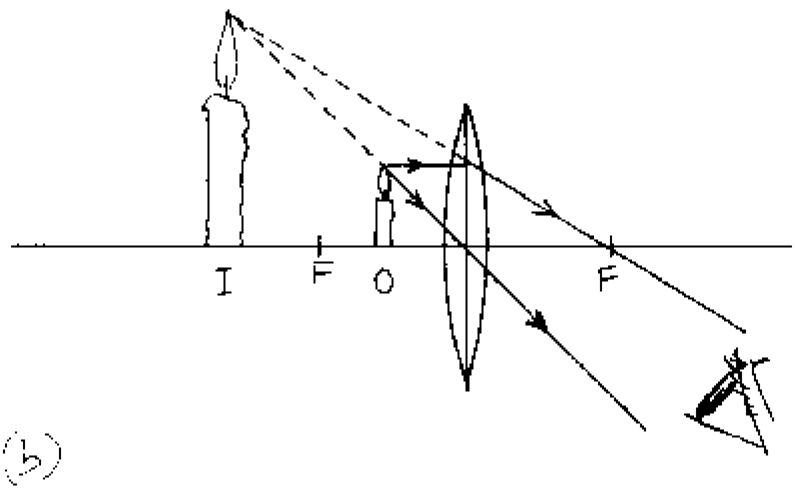

P: Produce a magnifying glass by making a loop as shown in figure (a) using paper clip wire (e.g. winding it around the tip of a ball point pen). Dip this loop in. water and use it as a magnifying glass by observing letters in a book etc. Thus, this water drop lens acts as a convex lens.

Q: Explain the magnification by drawing a ray diagram. What kind of image is formed?

E: See fig. (b), the image is larger than the object. However, this image is *virtual* because it cannot be obtained on a screen. In a virtual image the light rays do not meet really in the image point. They only seem to meet there because the eye and brain of the observer are accustomed the assume that the light rays travel in straight lines only. Yet the real rays were refracted by the lens which causes the image to appear in the eye of the observer. The object distance u must be less than f: u < f.

H: A bulb filled with water can also be used.

A: Magnifying glass, eye lens of compound microscopes, telescopes etc.

7.4.7 Simple Microscope

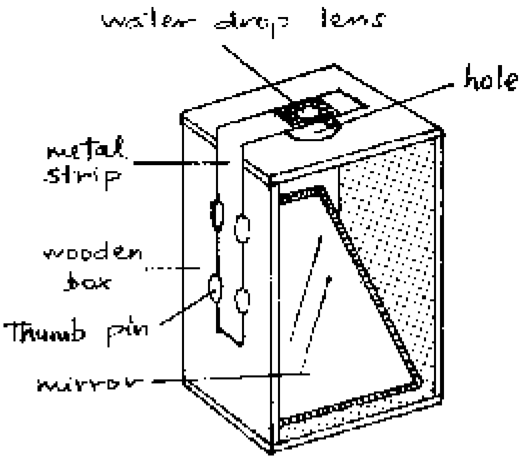

(a)

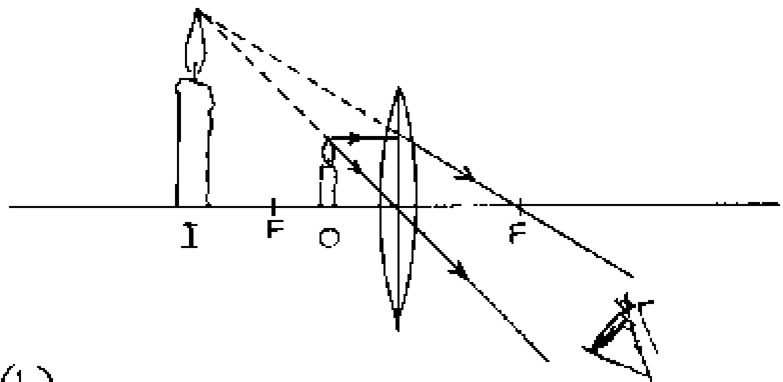

(b)

P: Produce a simple microscope according to the above figure. Adjust the mirror so that sun rays will be reflected to the hole below the lens. Place a transparent object (e.g. wing of a fly) on the hole and adjust the metal strip so that the water drop lens has less distance from the object than its focal length.

Q: How does the lens act here? What happens when you bring it even nearer to the object? Draw a ray diagram.

E: The lens acts here as a magnifying glass. When the object distance decreases further, the magnification will increase. The ray diagram is the same as in the last experiment.

7.4.8 Mirror Reflex Camera

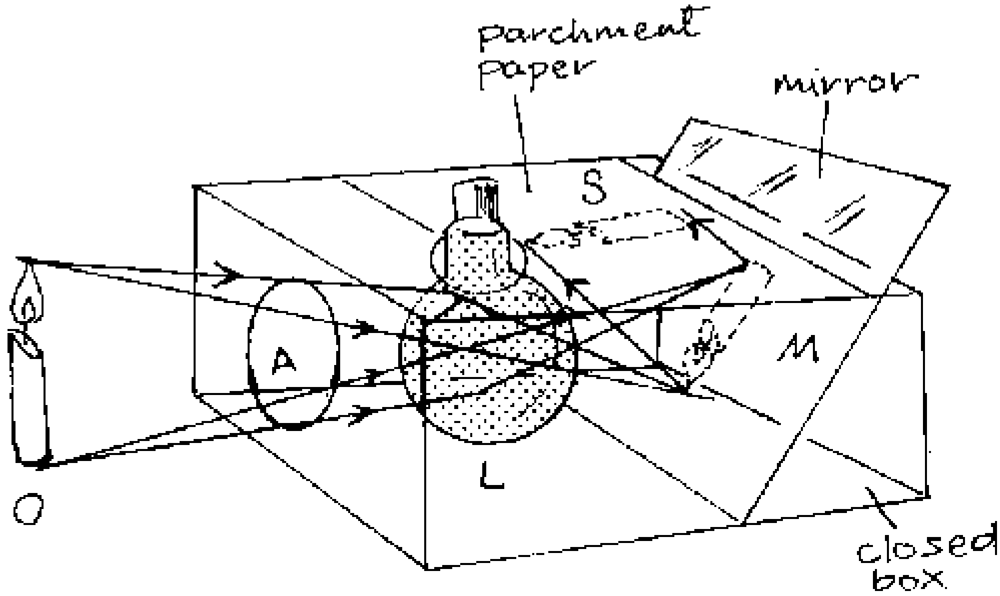

P: Modify the box camera (see p.90) according to the above figure using a mirror and another sheet of parchment paper to provide the top screen. Now this camera can serve as a model of a mirror reflex camera.

Q: Explain how a mirror reflex camera works.

E: In the mirror reflex camera the film is there where the screen is in the box camera (see p.90). The screen on top is just to view the same image (and to focus it) which will be produced on the film when the mirror has been removed. Thus, when taking a snap with the mirror reflex camera, the mirror is turned so that the image falls on the film instead on the top screen.

7.4.9 Display Chart of the Eye

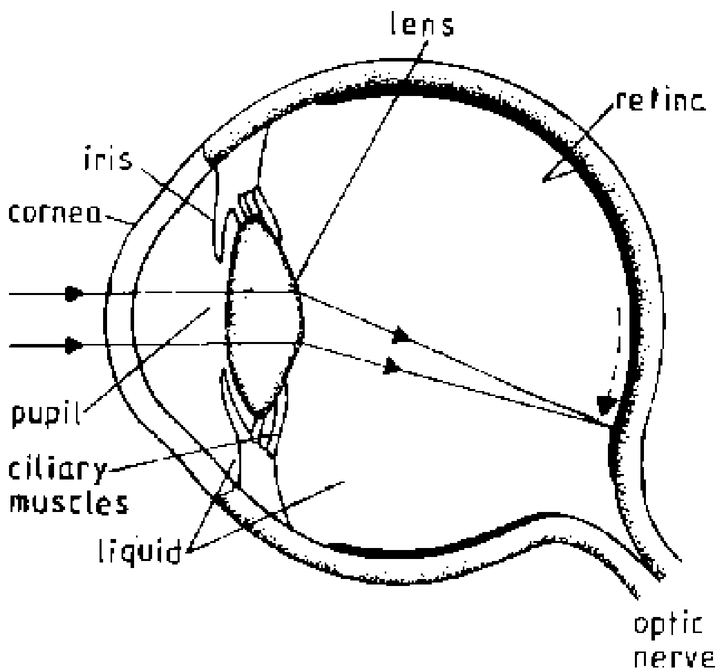

The eye possesses an convex lens which focusses the light on a sensitive membrane (called retina). In difference to the camera the eye lense changes its curvature and hence its focal length in order to focus the light from objects of different object distance. The focal length varies according to object distance while the image distance is kept constant and is roughly equal to the diameter of the eye, see the figure.

P: Draw a display chart of the above figure.

7.4.10 The Long-Sighted Eye

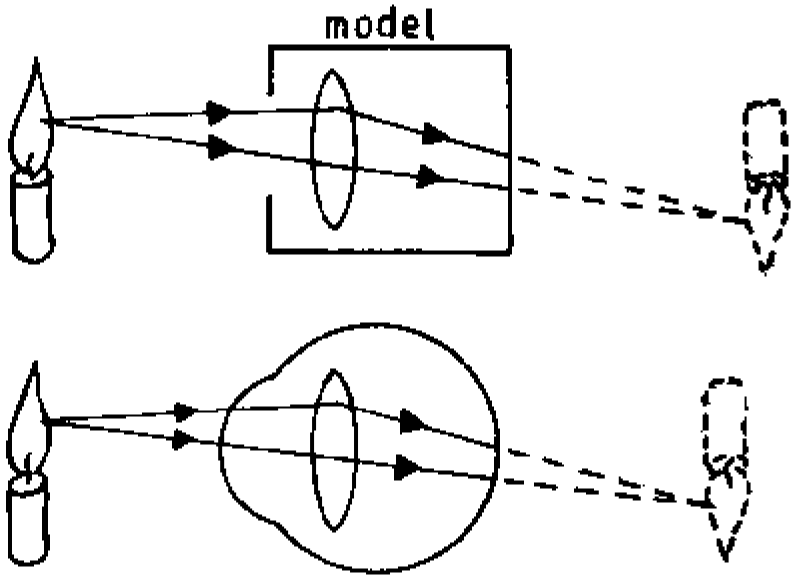

(a)

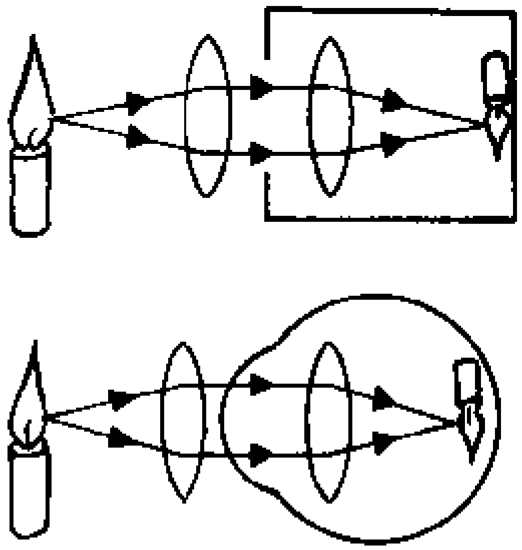

(b)

The long-sighted eye cannot focus near objects. The rays from a near object are focused *behind* the retina, see figure (a).

P: Make a *model of the long-sighted eye* by fixing the lens of the box camera (see p.90) so that it focusses a near candle *behind* the screen.

Q: How can you amend this sight defect in your model (without changing the image distance because that is *constant* in the eye)?

E: You need to place a convex lens of suitable focal length in front of the eye model in order to focus the near candle on the screen (retina), see figure (b). Thus, a long-sighted person needs spectacles having converging lenses.

7.4.11 The Short-Sighted Eye

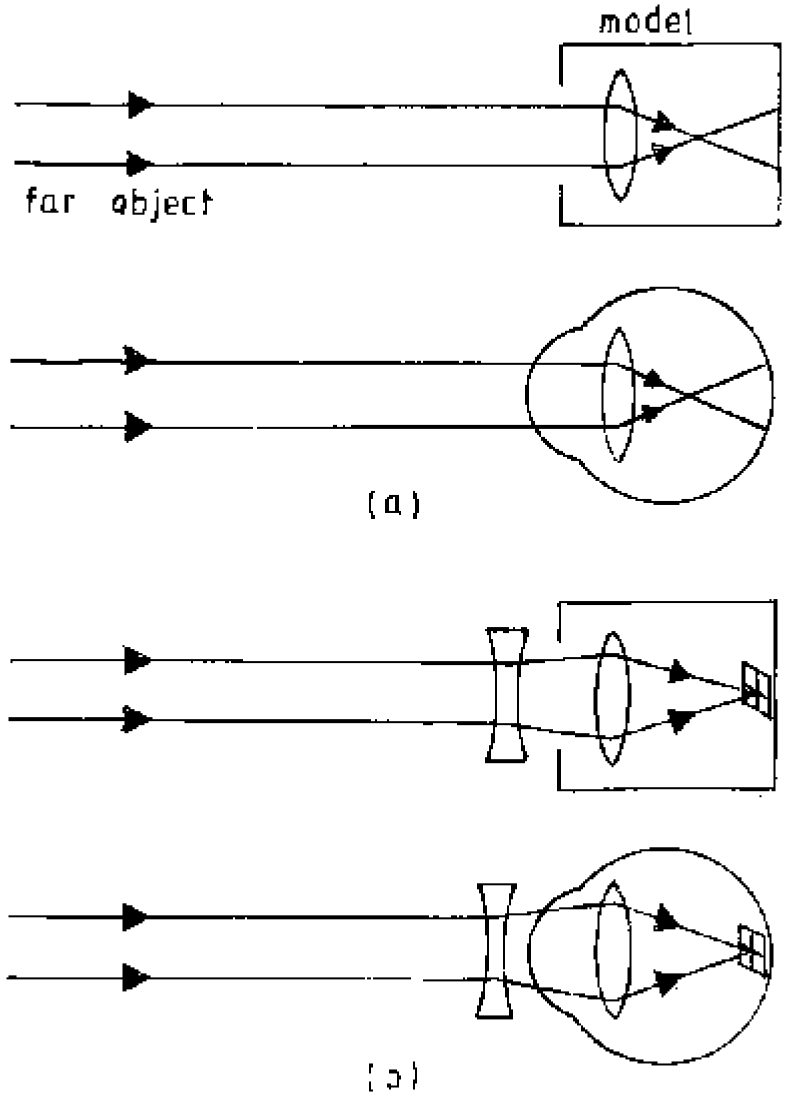

The short-sighted eye cannot focus distant objects. They are focussed *in front* of the retina, see figure (a).

P: Make *a model of the short-sighted eye* by fixing the lens of the box camera (see p.90) so that it focusses a distant candle *in front* of the screen.

Q: How can you amend this sight defect in your model (without changing the image distance because that is constant in the eye)?

E: You need to place a concave lens of suitable focal length in front of the eye model in order to focus the distant candle on the screen (retina), see figure (b). Thus, a shortsighted person needs spectacles having diverging lenses.

7.4.12 Persistence of Vision

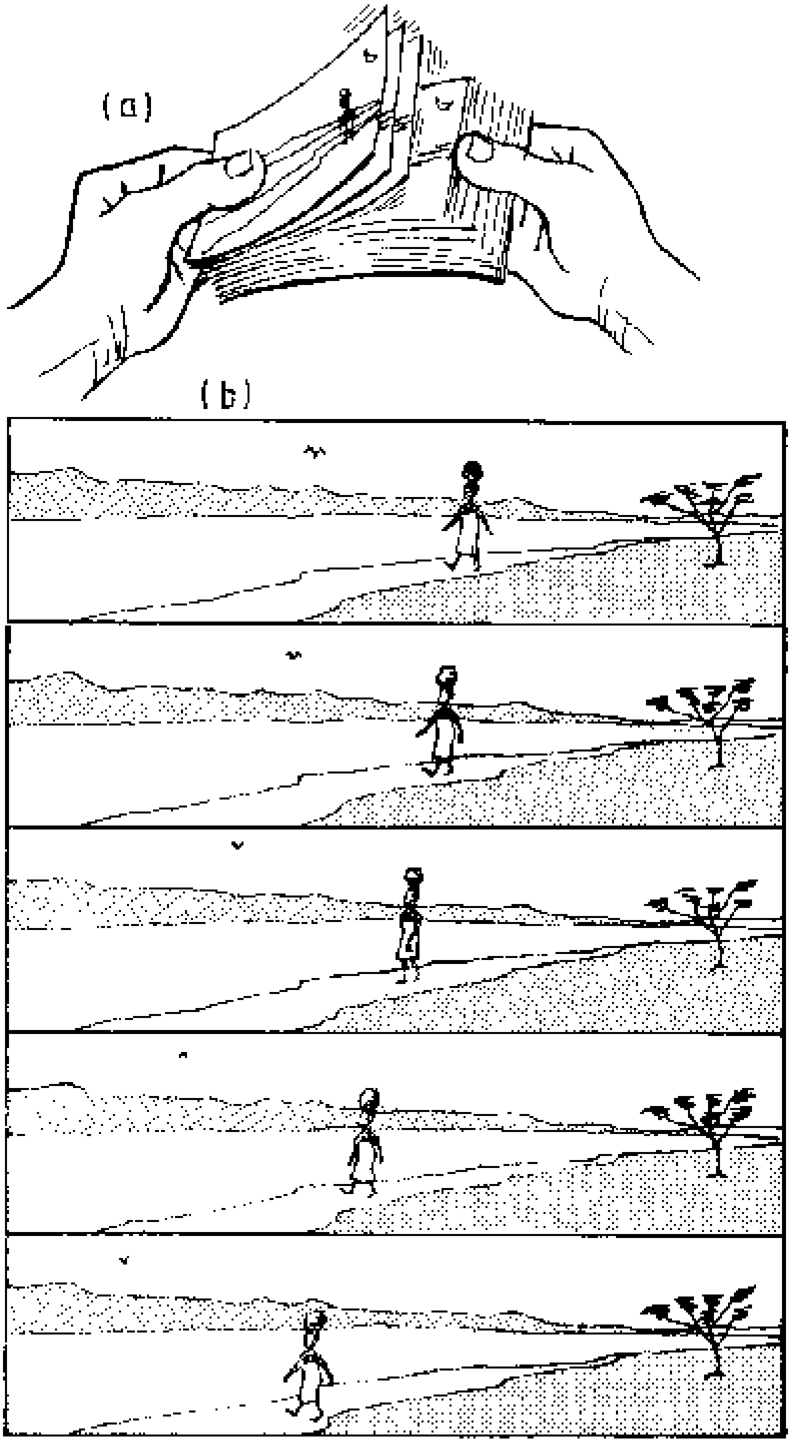

An image lasts on the retina for about one tenth of a second after the object has disappeared as can be shown by flipping cards having motion pictures as shown in figure (a).

A: The effect makes possible the production of motion pictures. 24 separate pictures each slightly different from the previous one, are projected on to the screen per second and give the impression of continuity.

P: Make eight motion pictures of a walking woman as shown in figure (b). Arrange them subsequently and hold them so that each picture comes to vision after the previous one within a short time.

Q: What do you observe?

E: The woman appears to walk.

A: Movies, television, videos.

7.5 Dispersion and Colours

The separation of white light into its component colours is called *dispersion.* Each colour has a particular value of refractive index. Hence by passing light through a glass prism, each colour is refracted through different angles.

7.5.1 Dispersion by a Glass Prism

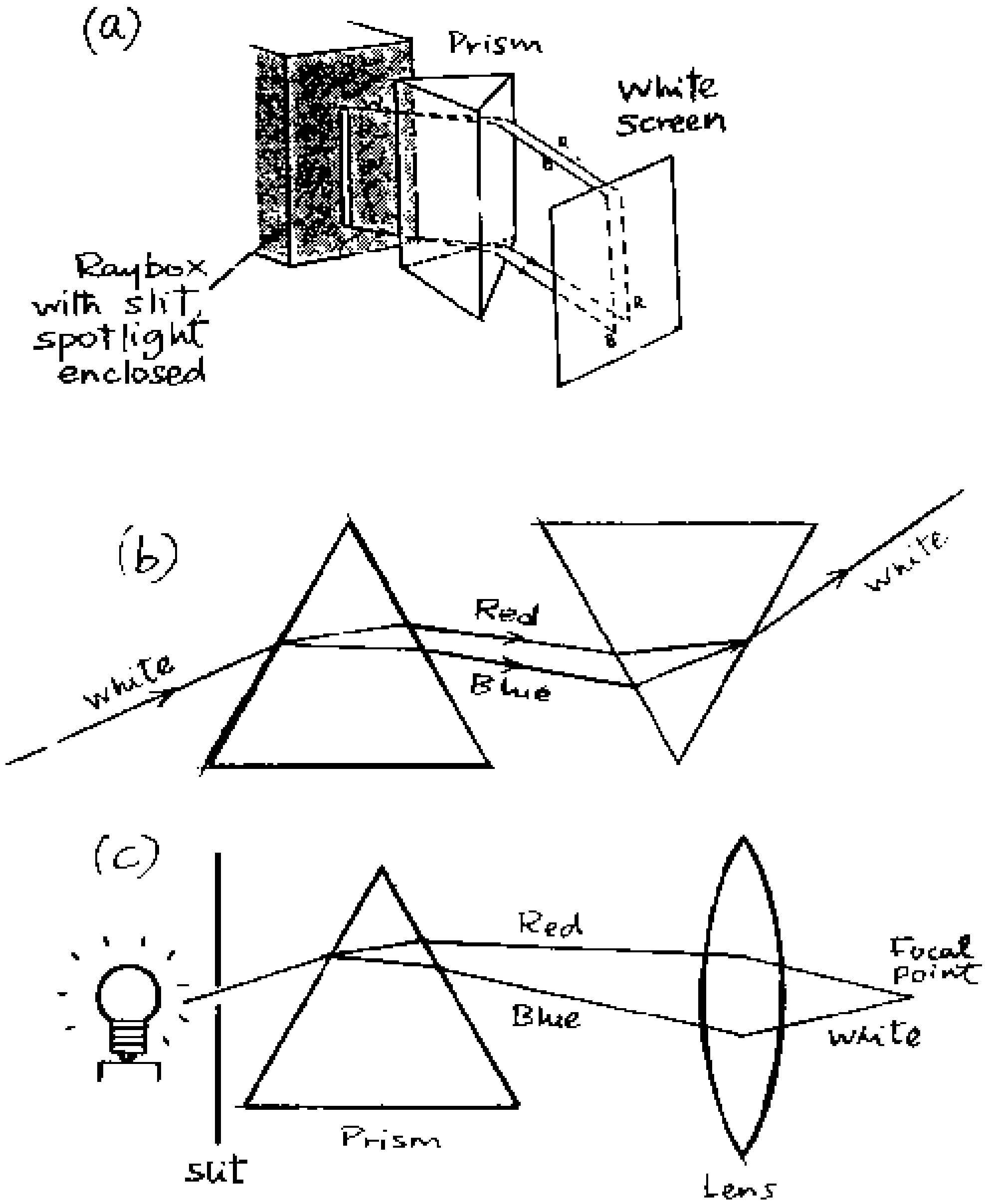

P: Arrange a glass prism, a narrow source of white light and a screen as shown in figure (a). Adjust the angle at which the ray hits the prism and the screen so that you catch the dispersion colours *(spectrum)*

Q: Which colour of light is most refracted by the prism? Which colour is least refracted by the prism?

E: The prism splits white light into its component colours. Blue light is refracted most and is observed nearest to the base of the prism. Red light is least refracted.

With the use of a second prism or a converging lens the separated light colours can be recombined to form white light, see figures (b) and (c).

7.5.2 Dispersion with a Mirror in Water

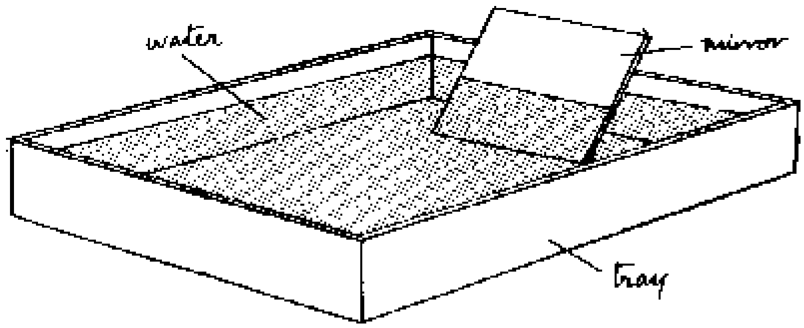

(a)

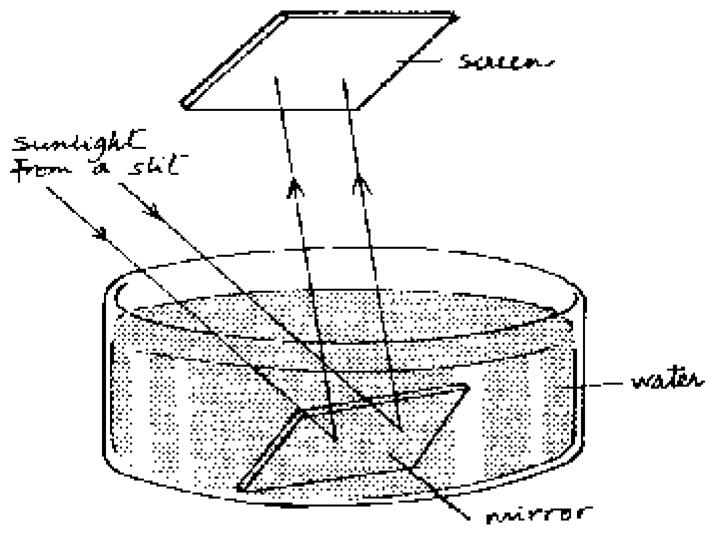

(b)

P: Place an inclined mirror in a container half full of water. Allow a light to strike at the slanted face of the mirror. Look through the submerged portion of the mirror, see figure (a).

Q: What do you observe?

O: The dispersion colours (spectrum).

P: Use the arrangement of figure (b) to obtain the spectrum on a screen.

Q: How do you explain the formation of this spectrum?

E: The refraction of the incident colours on the surface of the water and of the reflected rays again makes the water act as a "water prism".

7.5.3 Rainbow Colours from a Water Hose

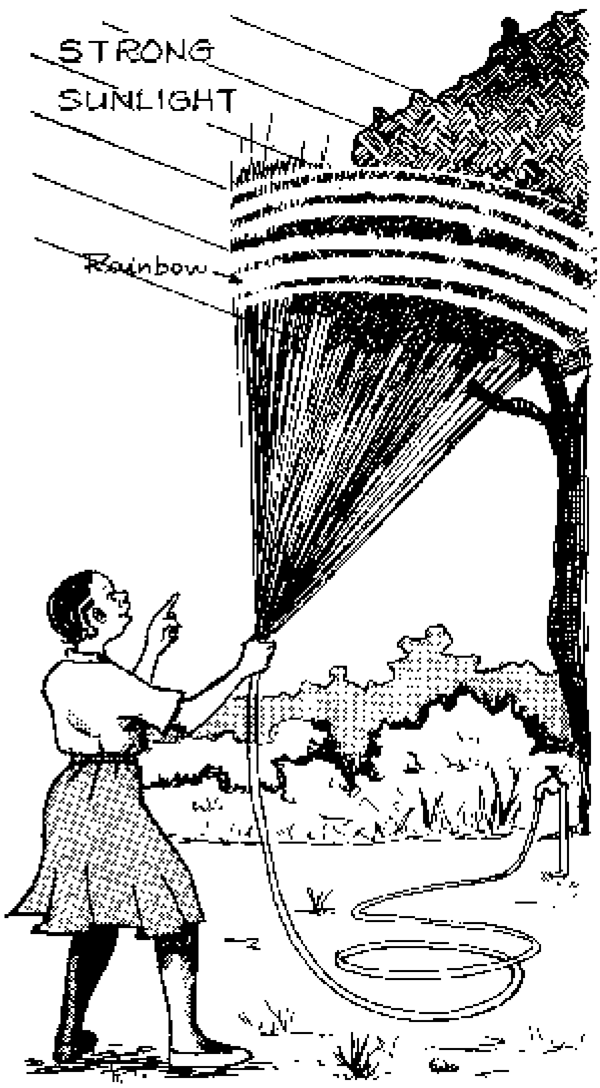

P: Early in the morning or late in the afternoon of a bright sunny day spray water from a hose pipe against a dark background of trees with your back towards the sun, see the figure.

Q: What do you see? How can it be explained?

O: You will observe the colours of the rainbow in the spray from the hose.

E: The rainbow is a result of the dispersion of light rays striking water droplets.

7.5.4 Colour Mixing: Newton's Disk

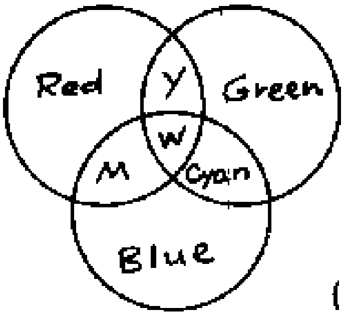

(a)

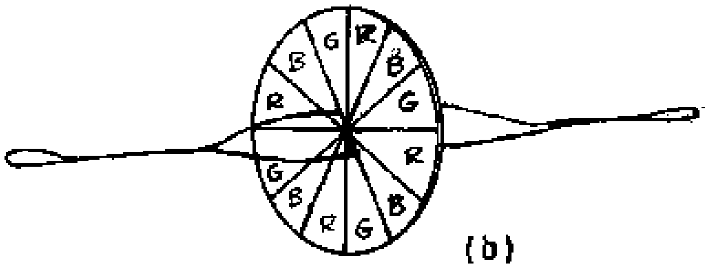
(b)

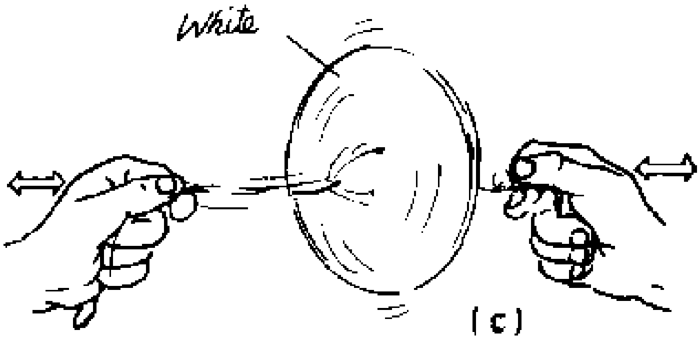

(c)

There are colours of light which when mixed in varying intensities will produce all other colours, but they themselves cannot be produced by mixing other colours. When mixed in appropriate intensities, they will also produce white light. These are the *primary colours* of light. The three primary colours of white light are *blue, green and red.* Hence BLUE + GREEN + RED = WHITE, see figure (a).

Y = yellow, M = Magenta and W = White.

Secondary colours are formed by adding two primary colours, e.g. Red + Green = Yellow.

So yellow is a secondary colour of red and green.

P: Paint twelve equal sectors of a disk made from white cardboard with red, green and blue colours arranged in that order, see figure (b). Tie a string through the two holes around the centre of disk. Swing and pull the string ends with both hands, see figure (c). The disk will start spinning to and forth.

Q: What do you observe on the disk?

O: The spinning disk appears whitish.

E: The colours of the light reaching the eye at short time intervals mix to white light due to the *persistence of vision.*

8. Magnetism and Electricity

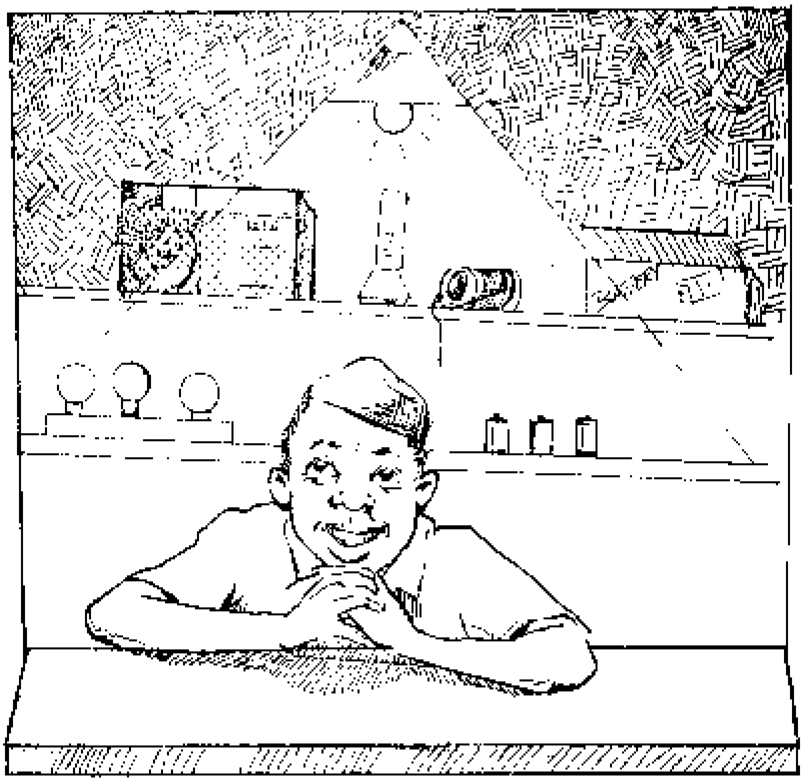

8.1 Magnetism

There are some materials which can attract iron. These kind of materials are said to have *magnetic properties.* The earth is a very weak magnet. Hence, a freely suspended magnet can be used as a *compass.* The end of a magnet pointing to the north is called the north (N-) pole, the end pointing to the south is called south (S-) pole. Thus, each magnet has a N-pole and a S-pole. Magnets can be found, for example, in loudspeakers and bicycle dynamos. Magnets are remarkable because they exert a force on iron or other magnets at a distance without any medium being in between. *Unlike poles attract each other, like poles repel each other.*

8.1.1 Distinction of Magnetic and Non-Magnetic Materials

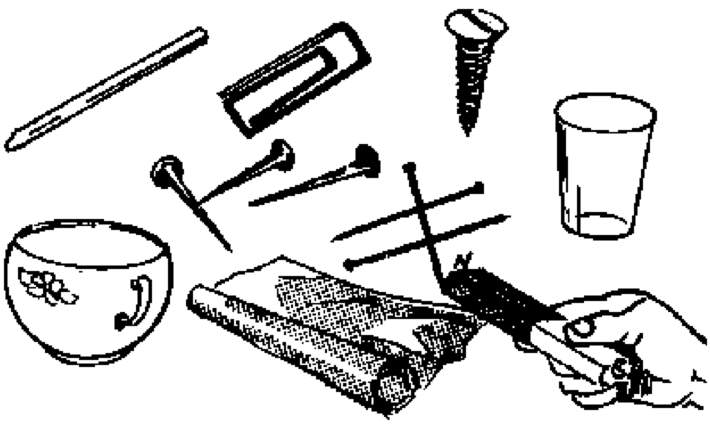

P: Arrange the materials shown in the diagram above on a table. Bring a magnet close to each material.

Q: What happens to each material?

E: Those materials which are attracted by a magnet are called magnetic substances. Those which are not attracted are called non-magnetic substances.

A: One can use a magnet to distinguish magnetic materials from non-magnetic materials. For example, you can find out if dry sand collected from outside contains magnetic materials by pushing a magnet through the sand.

H: The materials used in this experiment should include copper, iron, aluminium, plastic, porcelain, wood, nickel etc. if ever possible.

8.1.2 Interaction between Magnets

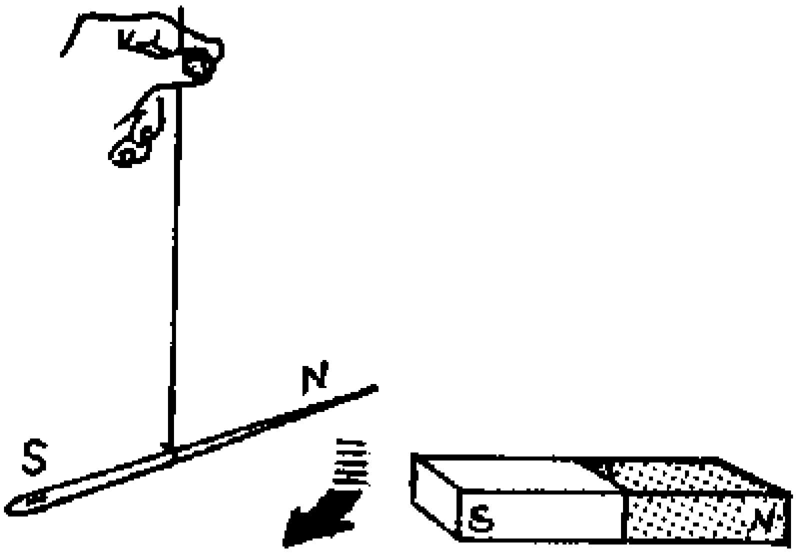

P: Suspend a magnetized steel needle (see experiment 8.1.3) and a bar magnet, one at a time. In each case mark the end pointing to the north as N-pole, and the end pointing to the south as S-pole.

Bring the N-pole of the magnet near the S-pole of the suspended needle.

Bring the S-pole of the magnet near the S-pole of the needle.

Now bring the N-pole of the magnet near the N-pole of the needle.

Q: What do you observe in each case?

O: You will observe that the N-pole of the magnet attracts the S-pole of the needle; the S-pole of the magnet repels the S-pole of the needle; and the N-pole of the magnet repels the N-pole of the needle. So we say *unlike poles of magnets attract each other and like poles repel each other.*

H: In case bar magnets are not available a magnetised piece of steel can be used instead of a bar magnet, see experiment 8.1.3.

8.1.3 Magnetisation by Single and Double Touch Method

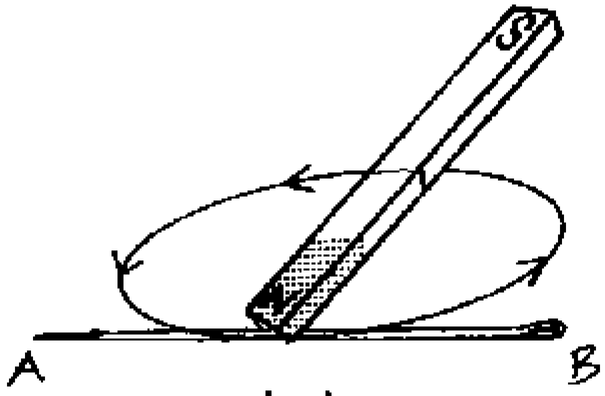

(a)

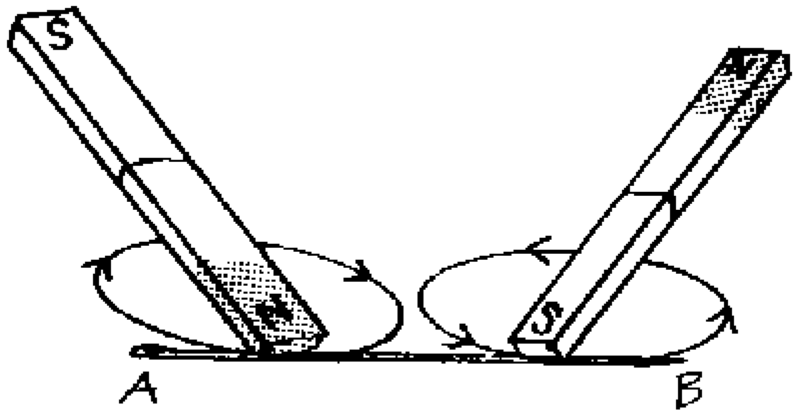

(b)

P: Move one pole of a bar magnet many times along the needle as shown in figure (a).

Now move the magnet along another needle as shown in figure (b). Do this several times, each time starting from the middle of the needle.

Q: Are the two needles magnetized? If so what are the poles of the needles?

O: Both needles are magnetised. The end A of the first needle is a N-pole and end B is a S-pole. The end A of the second needle is S-pole while end B is a N-pole.

H: The first needle has been magnetised by the single touch method and the second one has been magnetised by the double touch method.

8.1.4 Magnetic Ducks

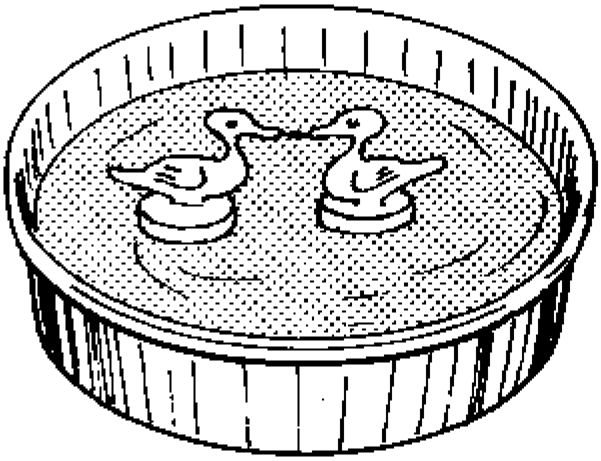

P: Magnetize one pin (or needle). Fix the pin or needle on the beak of one the paper ducks. Fix an unmagnetised pin on the beak of the second duck. Place the ducks to float in a bowl of water.

Q: What do you observe?

O: The beaks of the ducks come together as if they were kissing each other.

E: This is because the end of the magnetised pin in the beak of one duck attracts the end of the unmagnetized pin in the beak of the second duck.

H: To make the ducks, cut four pieces of paper in the shape of a duck and stick two of them together to make a duck. Fix each duck on a piece of wood so that it can float.

P: Magnetise both pins which are inserted into the beaks of the ducks and observe what happens.

8.1.5 Magnetisation by Electric Current

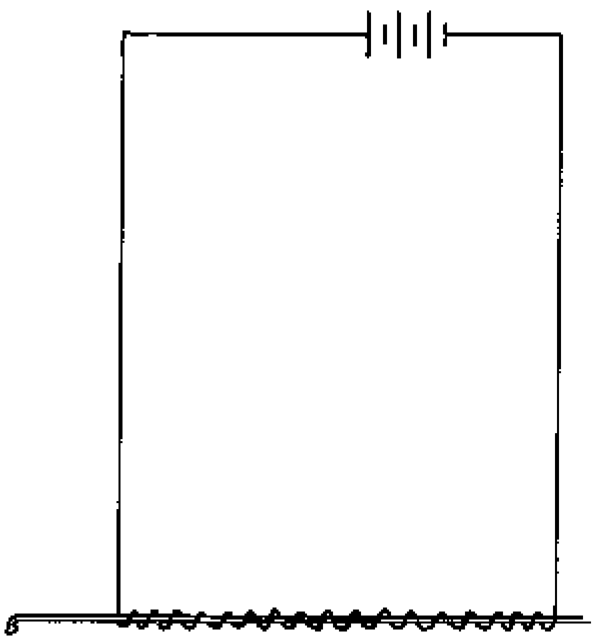

P: Make a coil by winding about fifty turns of isolated wire around a bicycle spoke. Connect the coil to two or three radio cells, see the figure. After a few minutes disconnect the battery and remove the spoke from the coil. Dip the spoke into iron filings.

Q: What do you observe?

E: The iron filings are attracted by the end of the spoke. The electric current in the coil has magnetized the spoke.

H: Steel can be magnetized by this method but soft iron *cannot.*

8.1.6 Demagnetisation of a Magnet

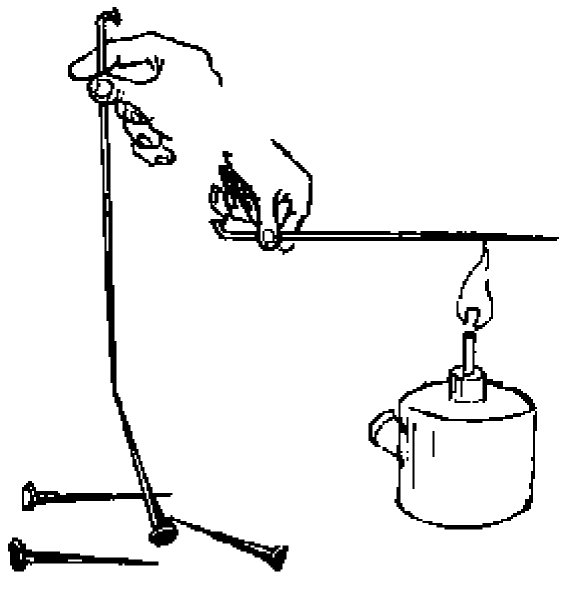

(a)

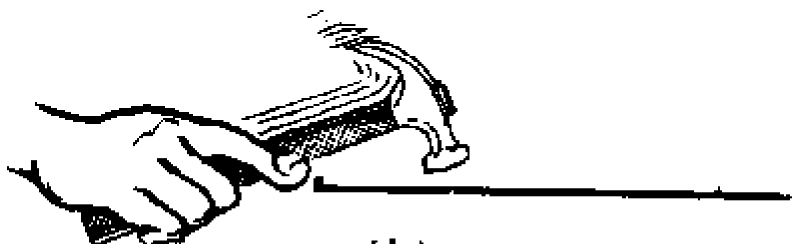

(b)

P: Magnetise a bicycle spoke and check if it attracts small nails or iron filings. Heat the spoke in a flame as in figure (a) and check again if it attracts the nails. Get another magnetised spoke and hammer it several times as shown in figure (b). Check if the spokes still retain their magnetism.

Q: What has happened to the spokes?

E: Heating and hammering of the spokes has destroyed the magnetism of the spokes.

H: Magnets should not be kept in hot places or dropped otherwise they may lose their magnetism.

8.1.7 Magnetic Field Pattern

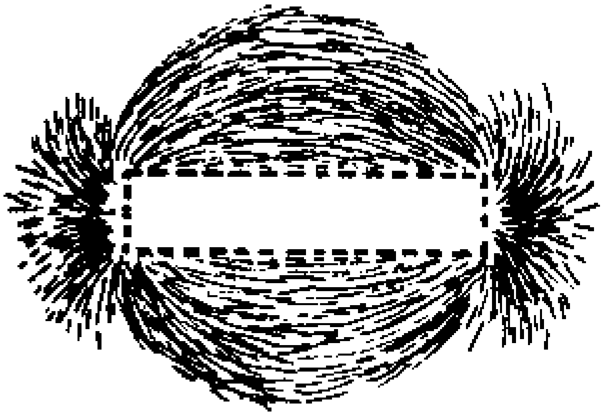

P: Place a cardboard on top of a permanent magnet Sprinkle iron filings on the cardboard. Tap the cardboard gently several times.

Q: What pattern do you observe being formed by the iron filings? Draw a sketch diagram of the pattern formed.

O: The iron filings form a pattern as shown in the figure above. The iron filings are aligned along lines called *magnetic field lines* or lines of magnetic force.

H: Instead of iron filings small bits of iron wool may be used.

8.1.8 Making a Simple Compass Using a Knitting Needle

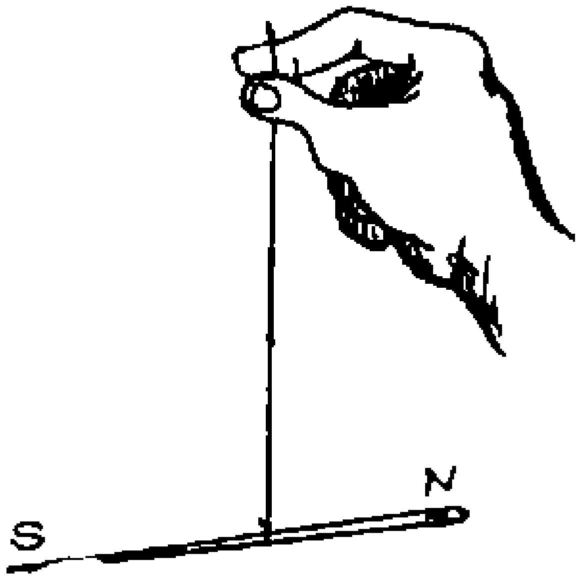

P: Suspend a magnetized knitting needle using a cotton thread. Allow the needle to settle and lable the N-pole and S-pole of the needle.

Turn the suspended needle through various angles and release it.

Q: What do you observe?

E: You will notice that the needle will always return to settle in the N-S direction.

The suspended magnetised needle can act as a simple divice to find the north-south direction.

A: Such a divice which shows the N-S direction is called a *compass.*

8.1.9 Making a Simple Compass Using a Razor Blade

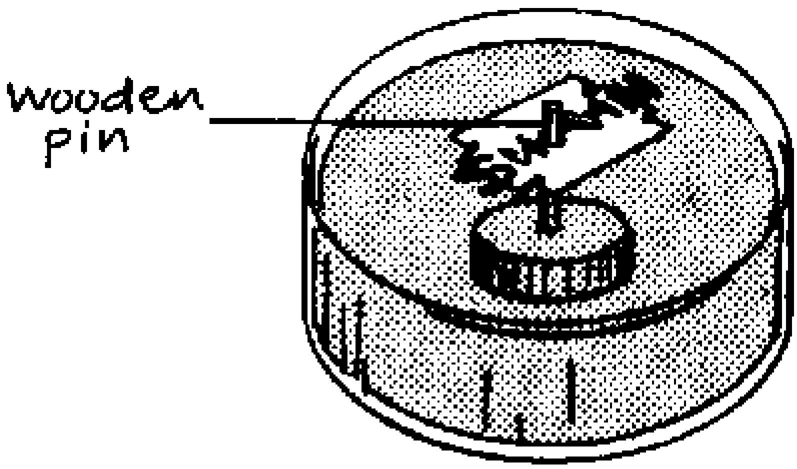

P: Fix a wooden pin vertically in a bowl of water. Slip a magnetised razor blade along the pin and carefully place it on the surface of the water so that it can rotate using the pin as an axle. Allow the blade to come to rest and mark its N-pole and S-pole.

First gently rotate the bowl. Then rotate the blade through any angle and leave it

Q: What do you observe in each case?

O: In the first case the blade will continue to lie in the N-S direction. After the blade has been rotated, it returns to lie in the N-S direction.

A: This arrangement can be used as a simple compass.

8.1.10 Testing for Magnets

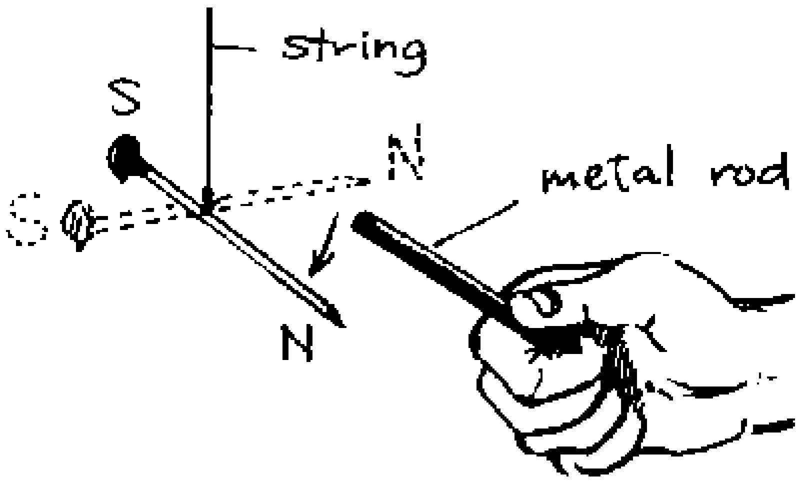

P: Bring the first end of a metal rod close to one pole of a suspended magnetized steel nail. Bring the second end of the metal rod close to the same pole of the suspended steel nail.

Repeat the above procedure with an iron rod which is magnetized.

Q: What do you observe with the magnetised and with the unmagnetised rod respectively?

O: With the unmagnetised rod both ends are attracted by the pole of the suspended magnet With the magnetised iron rod, one of its ends will be repelled. This follows from the fact that like poles repel and unlike poles attract.

A: This is used to distinguish magnets from unmagnetised iron.

8.2 Electrostatics

When plastic materials, e.g. plastic pens, combs and rulers are rubbed with fur, woolen clothes, or hair, they acquire negative *electric charges.*

When materials made of glass are rubbed with silk or polyester clothes, they acquire positive charges.

The charges acquired are stationary (static). The study of stationary electric charges is known as *electrostatics.*

Like electric charges repel each other, unlike charges attract each other.

8.2.1 Charging by Rubbing (Friction)

(a)

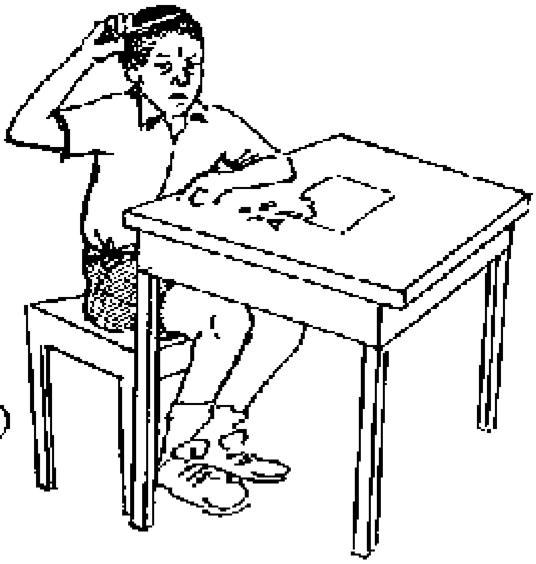

(b)

P: Rub a plastic pen on your hair, on woolen or synthetic clothes and bring it near small pieces of paper or pieces of thread.

Repeat the experiment by rubbing a glass bottle with a piece of "baibui" (made of silk) or polyester.

Q: What do you observe?

O: The plastic pen or glass bottle picks up small pieces of paper or thread.

E: The plastic pen becomes negatively charged and the bottle becomes positively charged. Thus they both attract pieces of paper.

A: The roller in a photocopying machine is charged positively. It attracts the paper which is being photocopied. Thus the paper sticks on the roller.

H: Changing by rubbing is more effective if you use dry materials during a dry day. Most of the time, electrostatic experiments won't work on a humid day.

8.2.2 Laws of Electrostatics

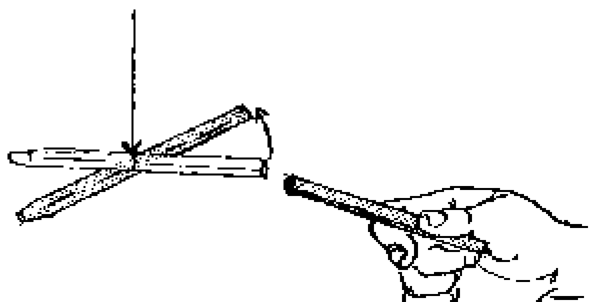

(a)

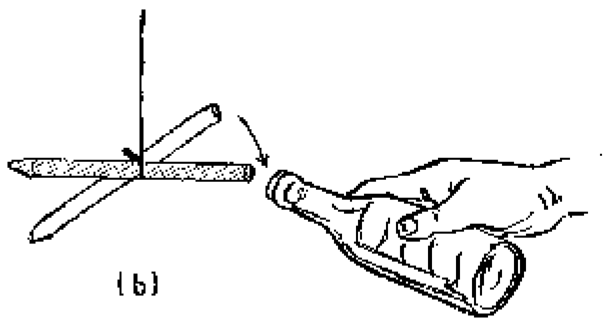

(b)

P: Rub a plastic pen on your hair or on a woolen or synthetic cloth and bring it near a suspended plastic pen (also charged by rubbing it on your hair).

Repeat the experiment by bringing a glass bottle charged by rubbing with silk or polyester material near the freely suspended *charged* plastic pen.

Q: What do you observe in both cases?

O: In the first experiment the two plastic pens repel each other; and in the second experiment, the plastic pen is attracted by the glass bottle.

E: The existence of the same types of charges (negative) on the plastic pens causes repulsion. When the positively charged bottle (glass) is brought near the plastic pen, attraction occurs.

This experiment demonstrates the electrostatic law: *like charges repel and unlike charges attract each other.*

8.2.3 Simple Electroscope

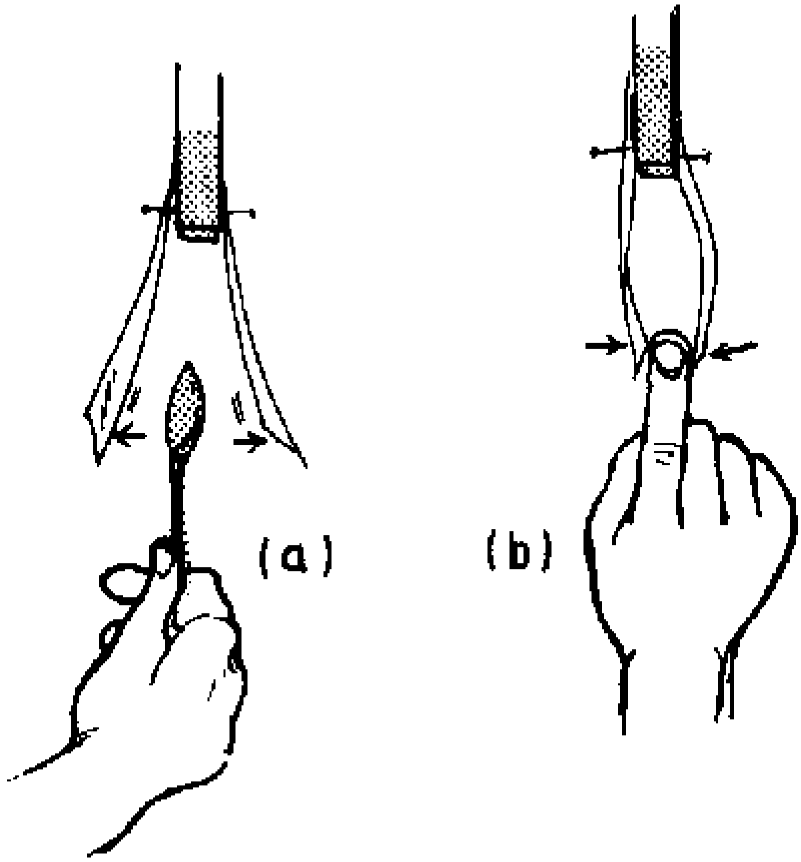

P: Cut two strips of polythene sheet. Fix the strips to a piece of wood as shown in the figure. Charge the strips by rubbing them with a clean duster.

(a) Introduce a charged plastic spoon between the charged strips.

(b) Introduce your finger between the charged strips.

Q: What happens to the strips?

O: The charged polythene strips repel each other.

(a) The strips are repelled further with the charged plastic spoon between them.

(b) The finger attracts the strips because the body is earthed. So it becomes positively charged relative to the two strips.

H: The polythene strips can be obtained from the transparent covering of a cigaratte package.

A: The electroscope.

8.2.4 Electrostatic Induction

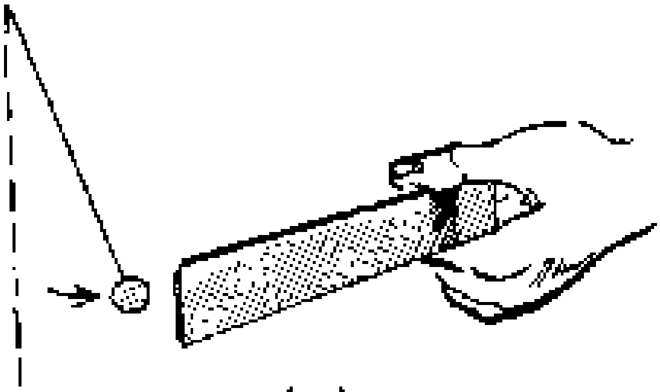

(a)

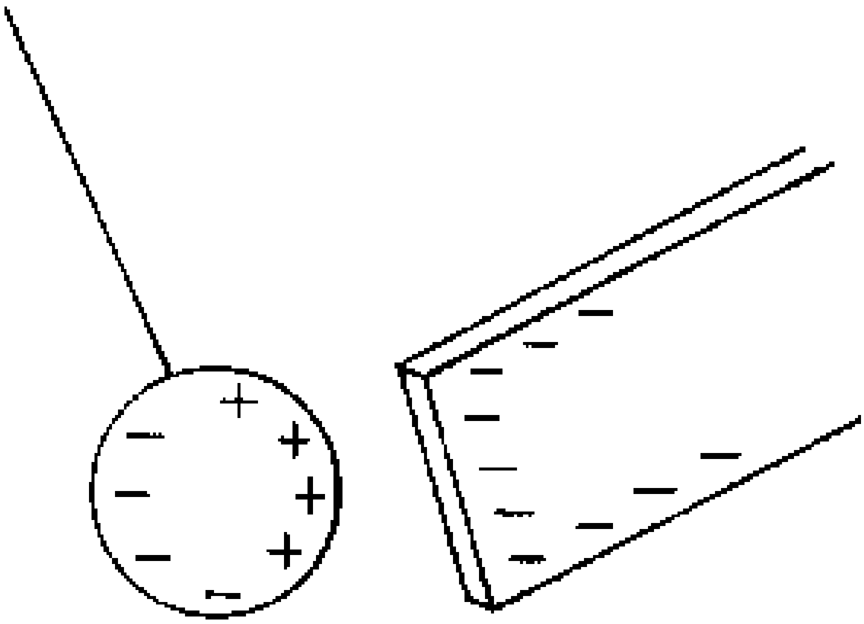

(b)

P: Make an aluminium ball (by using aluminium foil) and suspend it freely using a cotton thread. Bring a charged plastic ruler (negatively charged) near the aluminium ball without touching it.

Q: What do you observe?

O: The aluminium ball is attracted by the charged plastic ruler.

E: The force of attraction occurs due to the fact that the negative charge on the plastic ruler repels some of the electrons in the aluminium ball away from the side of the spherical surface near the ruler. Therefore the surface near the ruler gets positive charges and so the aluminium ball is attracted by the plastic. The other side of the aluminium ball becomes negatively charged, see figure (b). The process taking place in the aluminium sphere is called *electrostatic induction.*

8.2.5 Attraction of a Thin Stream of Water by a Plastic Object

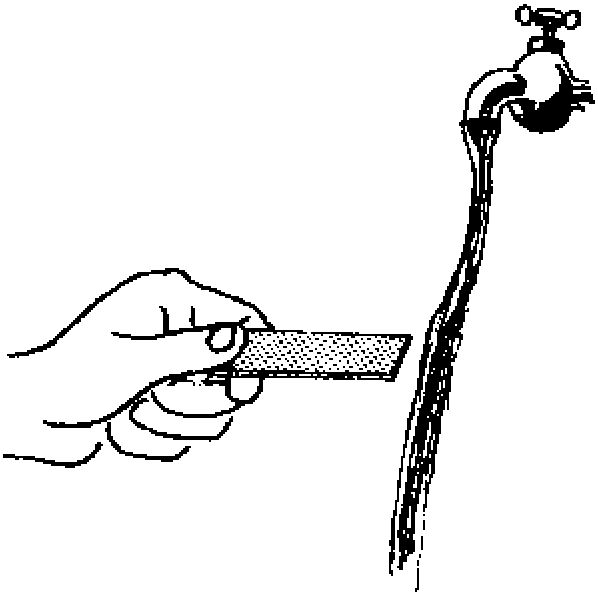

P: Charge a plastic object rubbing it on a woolen cloth. Then hold it near (but not touching) a thin stream of water from a tap.

Q: What happens?

O: The thin stream of water *is attracted by the plastic object.*

E: The negative charge on the plastic object causes the water stream to be attracted.

(For teachers only: The water is *not* charged. This effect is due to the dipole nature of the water molecules. The pupils cannot understand this yet in form one or two. Since the *water molecules* are *dipoles,* they have a positively and negatively charged end, yet the total charge of the molecules is zero since the two charges balance. When the charged object comes near the water stream, the oppositely charged end of the water molecules is attracted, the other end repelled. Thus, the molecules turn so that the attracted end gels nearer to the charged object than the repelled end. Since the electrostatic forces become weaker with the increase in distance to the charged object, the attracted end of the water molecules is more attracted by the charged object than the other end is repelled. Hence, the water molecules are always attracted. It does not matter whether the object is positively or negatively charged).

8.2.6 Charged Air Balloon

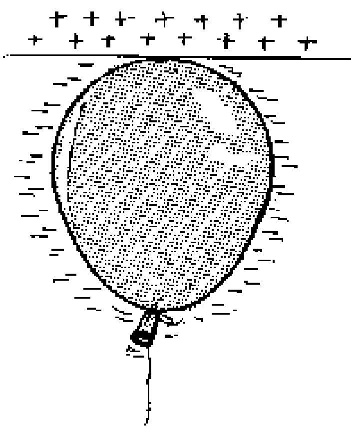

P: Rub a balloon on a woolen or synthetic cloth or hair and then place it against the ceiling.

Q: What do you observe?

O: The charged air balloon sticks to the ceiling.

E: This happens because the negative charge on the balloon repels some of the electrons in the ceiling away from the surface. This leaves the surface positively charged and so the negative balloon is attracted by the ceiling,

H: The experiment should be carried out during dry weather. Otherwise moisture in the air will neutralize the charges and the balloon will not stick to the ceiling. Holding the balloon with bare hands may also neutralize the charge. Try using dry paper.

A: Why do gramophone records tend to gather a lot of dust?

8.3 Electric Current

When electrons flow through a conductor they may, for example, light a bulb, heat a wire and produce a magnetic field. The flow of electrons in such a conductor is called an *electric current.* Materials, which allow a current to pass, are called *conductors.* Materials which do not allow a current to pass, are called *insulators.*

Note: If your house or school has got electricity, *never use the mains for performing the following experiments. The voltage there is quite high and could easily kill you.*

8.3.1 Conductors and Insulators

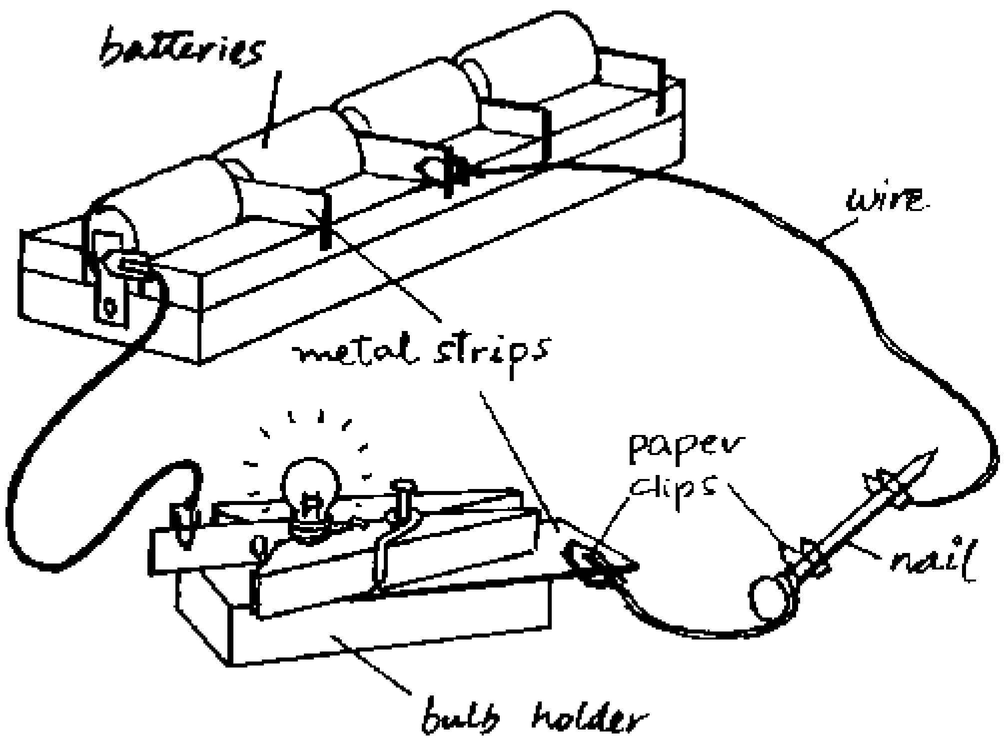

P: Connect a nail, a bulb and two cells with wires as shown in the figure. Successively replace the nail with cotton thread, a plastic spoon (or any plastic material), wood, aluminium foil (from a cigarette packet), paper and a piece of graphite from a pencil.

Q: What happens to the bulb in each case?

O: The bulb lights for some materials and does not light for others.

E: The bulb lights when current is allowed to flow through it and does not light when no current passes. The materials, which allow current to pass are called good *conductors* and those, which do not allow current to pass, are called poor conductors *(insulators).*

H: How to construct the bulb holder and the cell holder, refer to the figure. Note that metal plates are fixed at the end of the cells as a cell holder. For the lamp holder the metal plates are fixed on the side of the bulb and under the bulb.

Metals like copper, aluminium, iron etc. are used for connecting electric circuits. Plastics, wood, porcelain, etc. are used as insulators.

8.3.2 The Electric Circuit

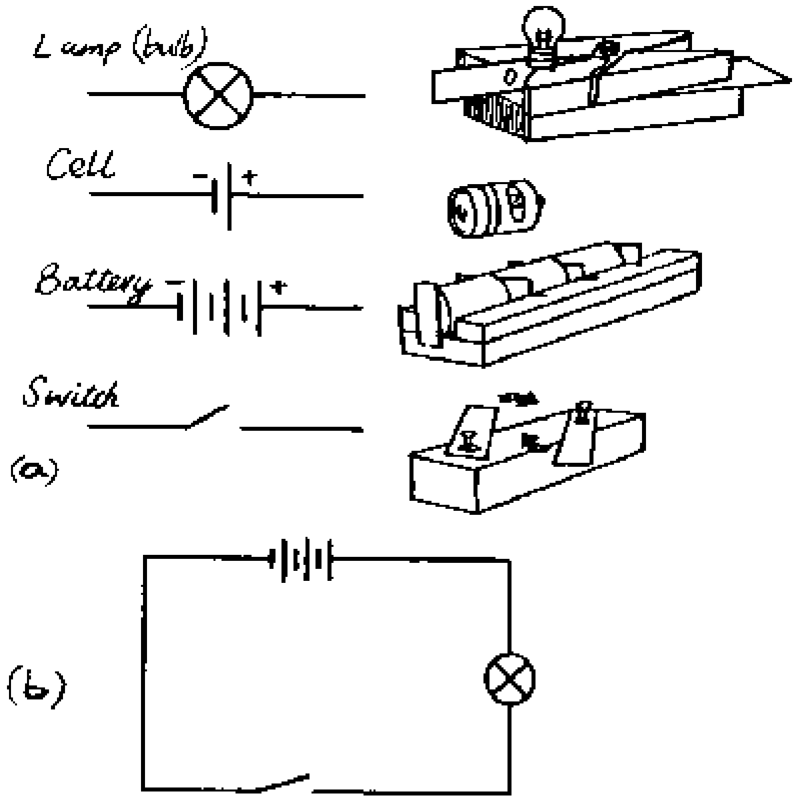

P: On the left side of diagram (a) we have placed the symbols used for a bulb, a cell, a battery of three cells, a switch. Connect a battery of three cells, a switch and a bulb with wires as shown in the circuit diagram (b). Close the switch.

Q: What do you observe at the bulb when the switch is closed?

E: When the switch is closed, the current flows through the bulb from the positive terminal of the battery to the negative terminal. Note, that this is *the conventional* current which flows from the positive to the negative terminal.(Of course, actually *electrons* flow in the wires from the negative to the positive terminal.) The switch makes a continuous path possible and hence the current can flow. This continuous path is called an electric circuit. In an *electric circuit diagram* we always use symbols. Every component of the circuit has its own symbol.

8.3.3 Bulbs in Series and Parallel

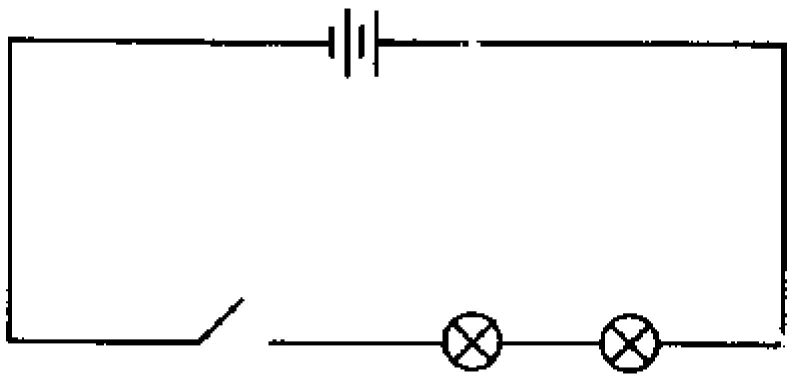

(a)

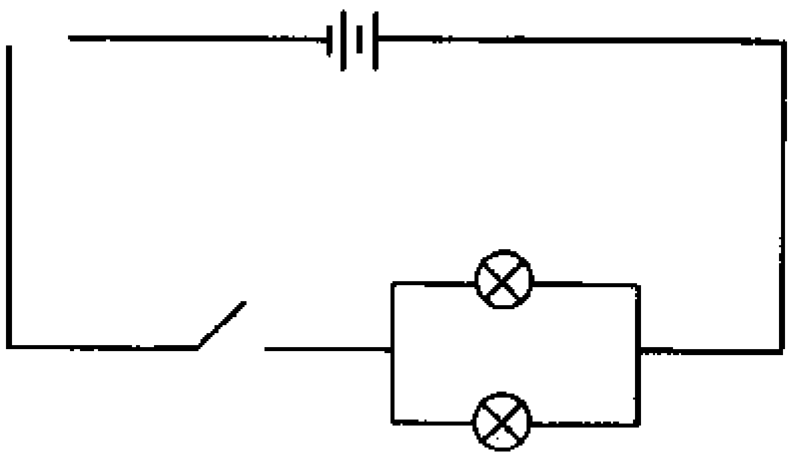

(b)

P: Connect two bulbs as shown in circuit diagram (a) so that they are in one line (series). Close the switch and observe the brightness of the bulbs. Now connect the bulbs side by side (parallel) as shown in circuit diagram (b). Close the switch and observe the brightness of the bulbs.

Q: What difference do you observe in the brightness of the bulbs when they are connected in series and when they are parallel? Explain your observations.

O: The bulbs are brighter when they are parallel than when they are in series.

E: More current passes through each bulb when they are parallel than when they are in series. The reason is that the full voltage of the battery lies on each bulb when the bulbs are connected parallel. When they are in series only half the voltage of the battery lies on each bulb.

A: In domestic wiring bulbs are connected parallel so that they obtain the right voltage.

8.3.4 Cells In Series and Parallel

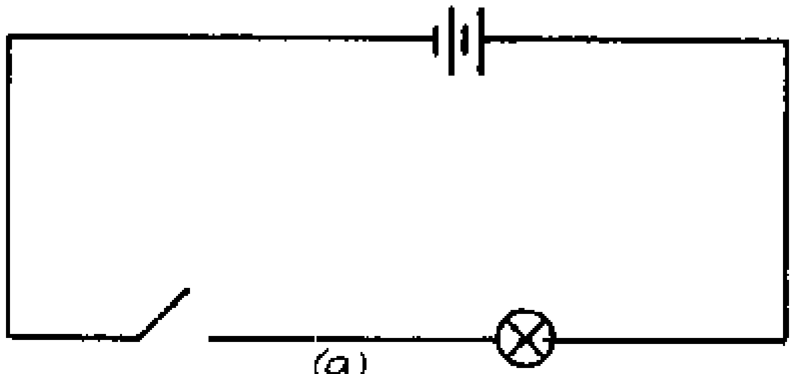

(a)

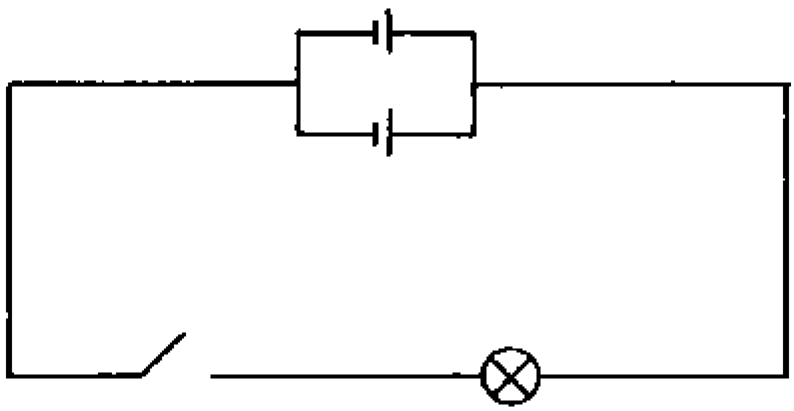

(b)

P: Connect two dry cells in series, that is the positive terminal of one to the negative terminal of the next as shown in circuit diagram (a). Connect the two cells parallel, that is the positive terminal of one to the positive terminal of the other and the negative terminal of one to the negative terminal of the other as shown in circuit diagram (b).

Q: What difference do you observe in the brightness of the bulb when the cells are connected in series as in circuit (a) and when they are connected parallel as in circuit (b)? Explain your observations.

O: The bulb is brighter when the cells are connected in series than when they are connected parallel.

E: More current passes through the bulb when the cells are connected in series than when they are connected parallel. The reason is that the *voltage* of the two cells add when they are in series. When they are parallel, the voltage stays the same as that of one cell.

A: In torches and car batteries cells are connected in series to get the required voltage. In cars 12 volts are needed, thus 6 cells are connected in series since one car cell has only 2 volts.

8.3.5 Ohm's Law: Increasing the Resistance

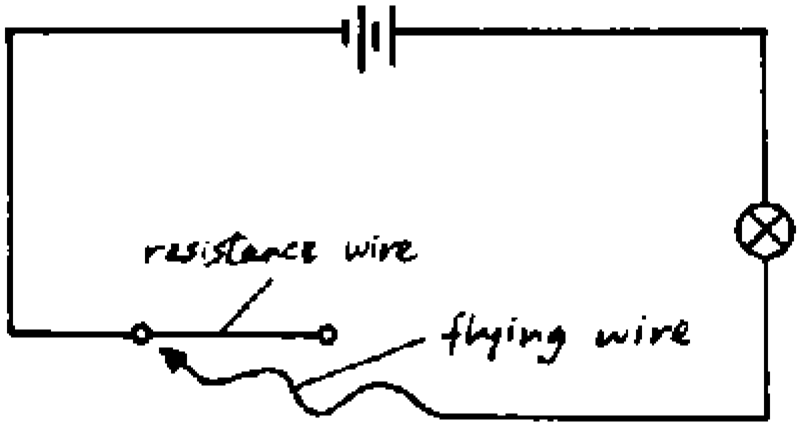

P: Connect the circuit as shown in the diagram. Slide the free end of the flying wire along the resistance wire.

Q: What happens to the brightness of the bulb?

O: The bulb becomes dim when the flying wire is placed at the free end of the resistance wire.

E: As the length of the resistance wire increases, the brightness of the bulb decreases. The current passing through the bulb decreases as the length of the wire increases, since the resistance of the wire increases.

A: Rheostats are long coiled wires used to vary the current in circuits.

H: For the resistance wire you can use a long steel wire from steel wool.

8.3.6 Ohm's Law: Increasing the Voltage

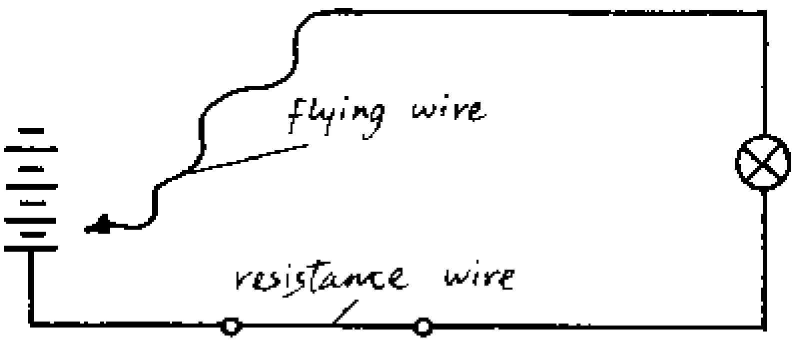

P: Connect the circuit above. Starting with the free end of the flying wire connected to one cell, successively increase the number of the cells.

Q: What difference in brightness of the bulb do you observe as the number of cells connected are increased?

O: The bulb becomes brighter when more cells are used than when one cell is used. The brightness increases with increase in the number of cells.

E: The current passing through a circuit increases with increase in the number of cells since the voltage increases accordingly.

8.3.7 Heating Effect of an Electric Current

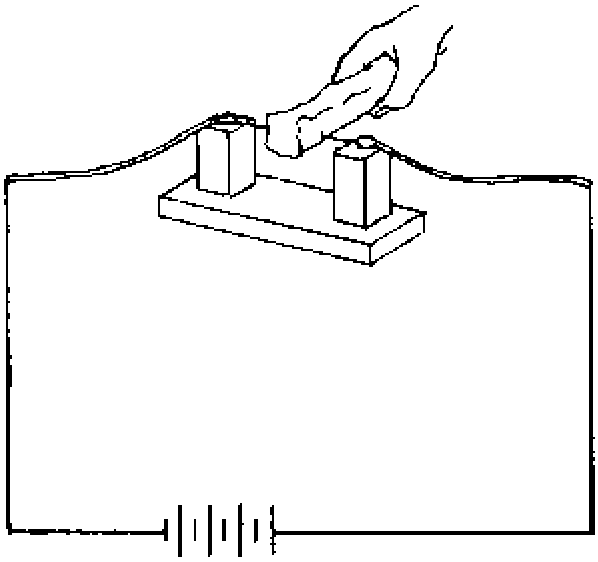

P: Set up the circuit as shown. Press a piece of styrofoam (polystyrene) gently across the steel wire.

Q: What happens to the styrofoam?

O: The styrofoam piece is easily cut.

E: The electrical energy has been converted to . heat energy which melts the styrofoam.

A: Electric iron, electric kettle, electric cooker etc.

8.3.8 The Fuse

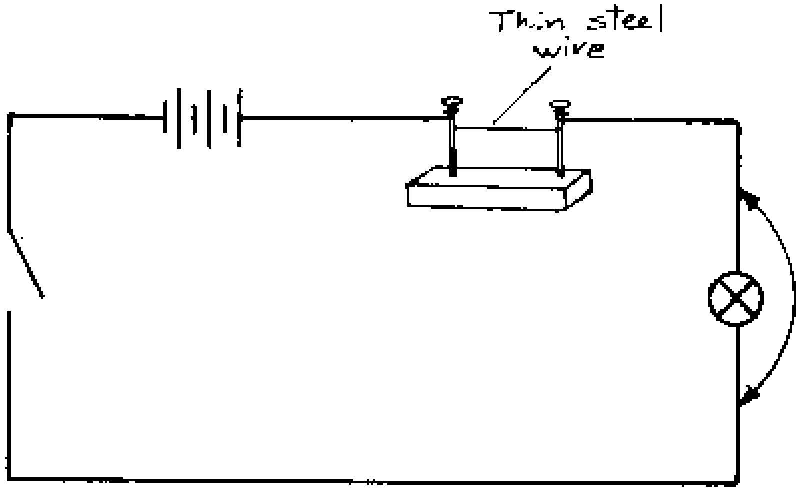

P: Connect the circuit as shown in the diagram. Close the switch. Make a short circuit by connecting a copper wire across the bulb.

Q: What happens to the thin steel wire connected across the nails?

O: The steel wire melts (fuses) and the bulb stops lighting. This is because a large current passes through the thin steel wire. The wire acts as a fuse.

A: A fuse is used in electrical appliances and domestic wiring to cut off large currents in electric circuits which could start fires.

8.3.9 Chemical Effect of an Electric Current

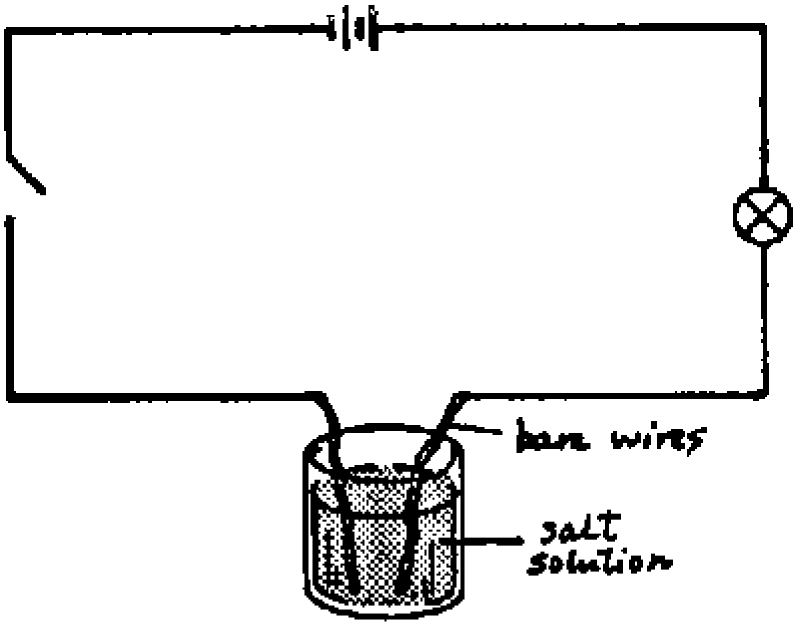

P: Connect the circuit shown in the diagram and close the switch so that an electric current passes through the salt solution.

Q: What do you observe in the salt solution?

O: Bubbles are produced on the bare wires in the salt solution.

E: When electricity is passed through a liquid like a salt solution, a chemical reaction takes place which gives off gas bubbles. This process is known as *electrolysis.*

A: Electrolysis is used in electroplating and coating of iron with different metals.

8.3.10 Magnetic Effect

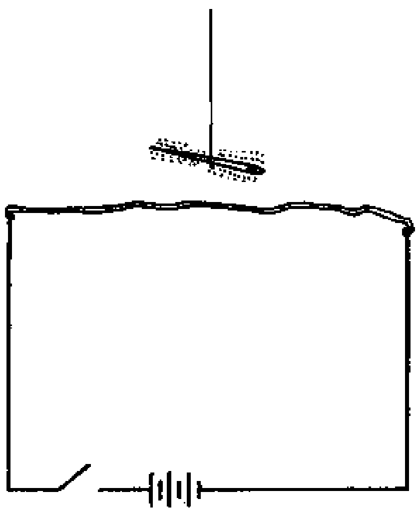

P: Connect the electric circuit as shown in the figure. Suspend a magnetized needle with a piece of cotton thread just above the wire. Close the switch *only for a very short time.*

Q: What happens to the magnetised needle?

E: The magnetised needle is deflected, because the wire has produced a magnetic field.

A: Electromagnets.

8.3.11 An Electromagnet

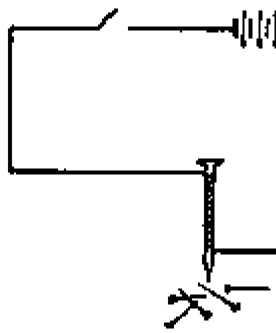

P: Wind about fifty turns of insulated wire around a nail. Connect the ends of the wire to the cells. Place one end of the nail close to office pins lying on the table and close the switch. After a while open the switch.

Q: What happens to the pins?

O: The pins are attracted to the nail, when the switch is closed, and fall off when the switch is opened.

E: When the switch is closed the current flows through the coil and magnetizes the nail. The magnet formed is known as *electromagnet.* The nail is made of soft iron. Thus it loses the magnetism when the current is switched off.

A: Used in harbours for lifting heavy loads with iron containers. In electric motors.

8.3.12 The Force on a Current in a Magnetic Field

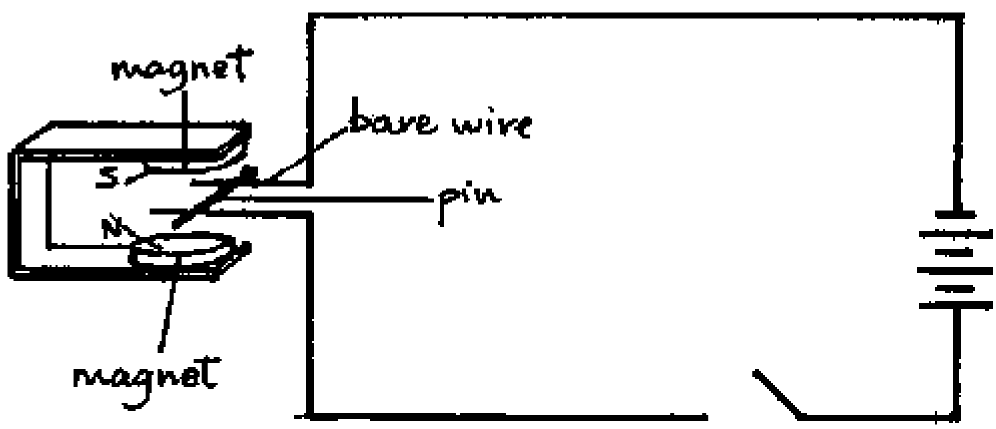

P: Connect the circuit as shown in the diagram. Place a nail across the straight bare wires between poles of the magnet and close the switch, *for a short time only,*

Q: What happens to the nail?

O: The nail rolls along the straight wires, because a force is produced on the current in the nail by the magnetic field.

A: Electric motors and loudspeakers.

8.3.13 Opening a Dry Cell

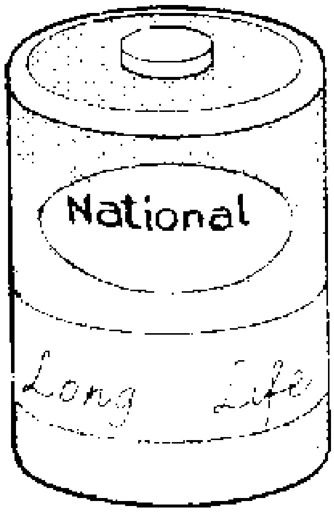

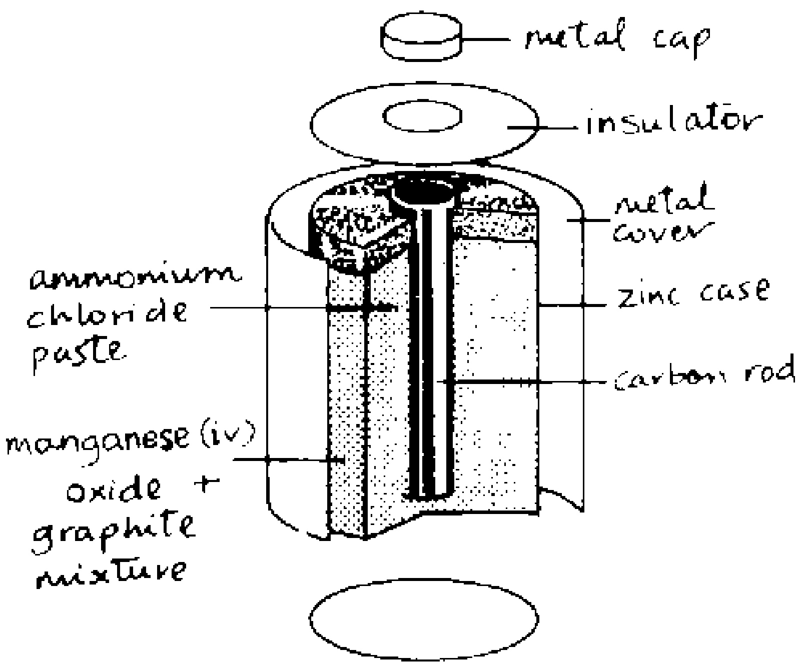

P: Open a dry cell. Examine it carefully.

Q: What do you see in the broken dry cell?

O: You will see a black rod at the centre of the cell surrounded by a black substance covered by eaten up zinc.

E: The black rod at the centre is a carbon rod (graphite). The black substance contains manganese(IV) oxide and ammonium chloride paste.

The electrical energy is produced by a chemical reaction between the zinc and the ammonium chloride paste.

8.3.14 The Bicycle Dynamo

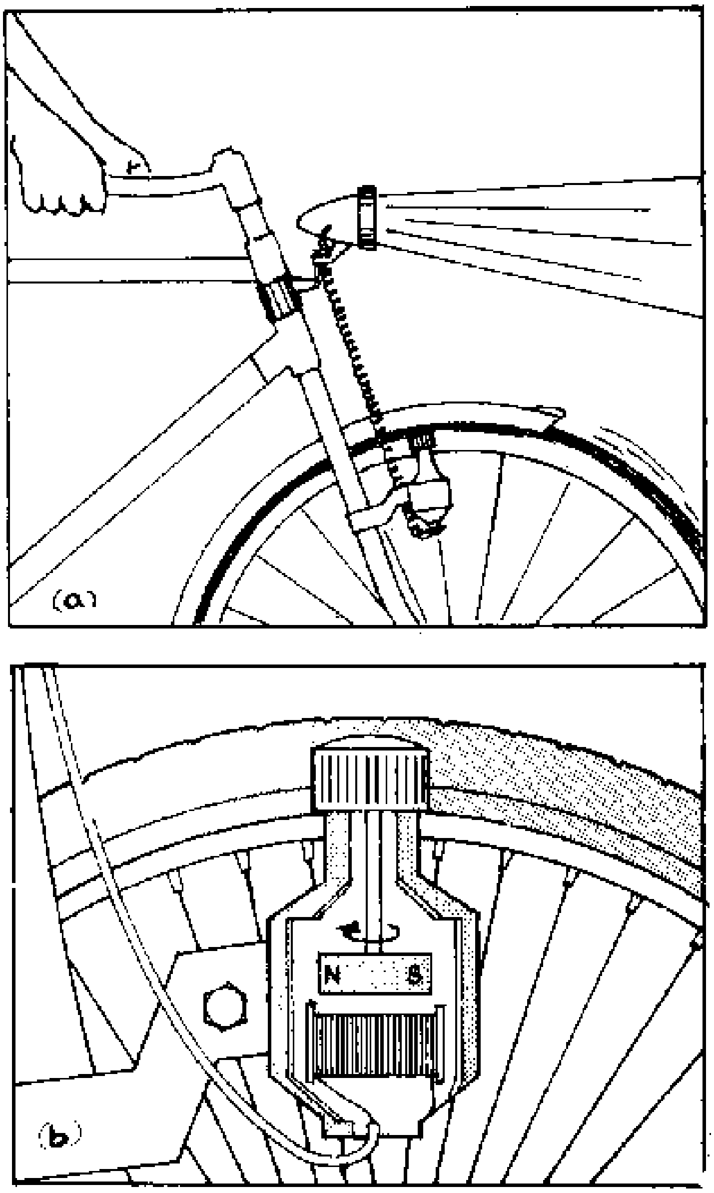

P: Connect a bulb to a bicycle dynamo by using connecting wires. Turn the wheel of the bicycle very fast and then slowly.

Q: What do you see when the wheel is turned very fast and when it is turned slowly?

O: When the wheel is turned very fast, the bulb gives a bright light, and when it is turned slowly, the bulb gives a dim light.

E: Inside a dynamo there is a magnet and a coil, see figure (b). When the wheel is turned, it makes the magnet rotate. The rotation of the magnet near the coil produces a current in the coil. The amount of current produced increases with the speed of rotation of the magnet.

A: Electric Generators.

Appendix

A Sootless Kerosene Burner

Spirit for burners is not always available, but kerosene can be purchased nearly everywhere. For the heating of tins or other things a sootless *kibatari* (kerosene burner) will do.

With a simple and cheap additional device which the same 'fundi' can make who produces the normal *kibatari,* you can get a nearly sootless flame. The principle behind is to improve the draft of the air stream in order to obtain a *more complete combustion* of the kerosene. The flame of the kibatari should bum in contact with a metal wall, which acts as a catalyst.

The basic device consists of 4 parts:

(a) A *perforated inner chimney* is made from a tin which is about 1.3 cm wide and 7 cm long. If the diameter of this tube is too small, the flame will not burn; if it is too wide the effect will be small. The holes can be made with a nail and should have a diameter of 2 mm. There should be 3-4 holes per square centimetre.

(b) An *outer chimney* which serves at the same time as a wind shield. The holes below are about 5 mm in diameter.

(c) Both chimneys fit together in a *per forated soda bottle cap* as shown.

(d) Ask the fundi to solder another soda bottle cap around the *wick holder (d).* This holds the chimneys better.

The flame is optimized by adjusting the length and shape of the wick: it should have contact with the perforated tube. With this burner temperatures of about 650°C can be achieved.

(a)

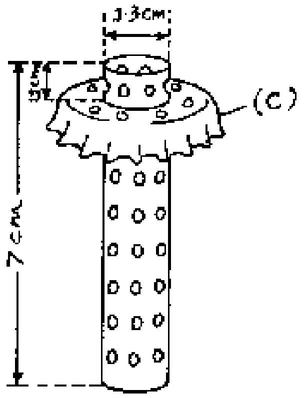

(b)

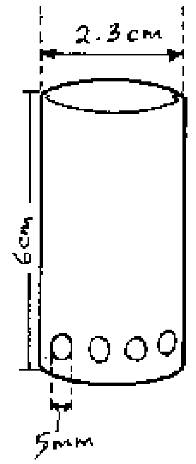

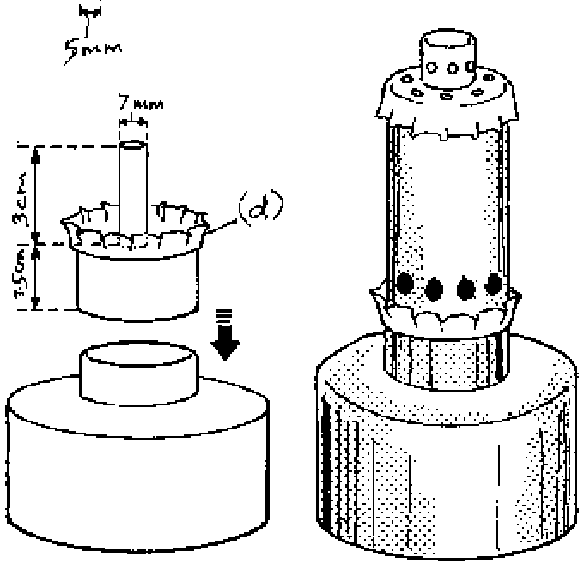

Test Tubes and Flasks

A cheap substitute for expensive test tubes and reaction flasks are opened worn out electric bulbs. They resist the temperature of an alcohol or kerosene burner, but *not* the temperature of a bunsen burner. Heat the bulbs carefully and do *not* use them for aggressive substances like *concentrated* acids and hydroxides.

Bulbs can be opened with pliers and a round file or even with a pointed long nail. Wrap your hand with a piece of cloth. Never hold the bulb to be opened at its glass, hold it only at its socket, see figure (a).

Special clamps are not needed. Fold a sheet of paper and you have the cheapest test tube or bulb clamp, see figures (c).

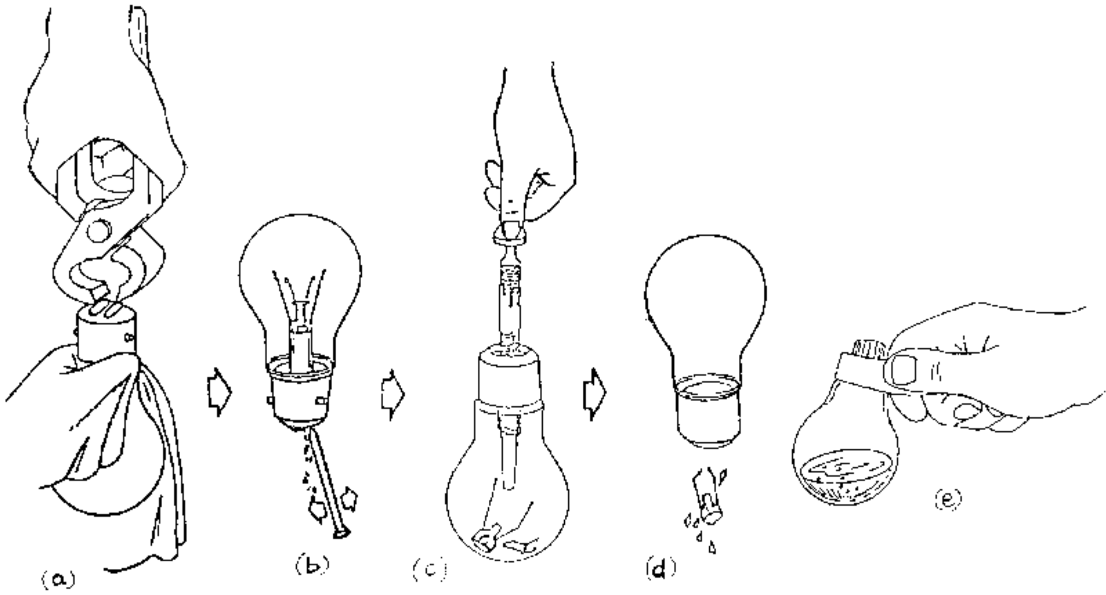

List of Materials

This is the list of materials needed for a workshop on "Teaching Physics to Beginners with Locally Available Materials."

It is assumed that the organisers will bring the materials which are needed for each kit and the tools listed below. These, therefore, are not mentioned especially under the numbered experiments below. Common materials like water, etc. are not mentioned.

The materials listed allow to produce the *Physics kit* with which the experiments described in this book can be performed. Each participant of a workshop should produce his/her own kit according to the experiments he/she selects.

Materials (needed for each kit)

Matches
Wooden rulers
Opened (transparent) bulbs (and if possible some test tubes)
Some vibatari (kerosene lamps; if possible with chimneys for a sootless flame).
Cement bag or similar paper
Nails of different diameters
Thumb pins
Office pins
Paper clips
Small and medium size tins for heating
Some transparent bottles with smooth surface
Some transparent glass jars
2-3 candles
Glue

Tools etc. (needed only once)

1 sharp knife
1 combination plier
1 hammer
1 set of weights
1 balance (see p. 10)
1 measuring cylinder

1 magnet (e.g. from a discarded loudspeaker)
1 drill borer for 2-3 mm holes
1 tin opener
1 pair of plate-shears
1 pair of scissors

To be done by craftsmen:

Chimney for sootless kibatari (see p. 109)
Funny jumper (see p.21)
Box with lid and handle for physics kit, sec the figure below

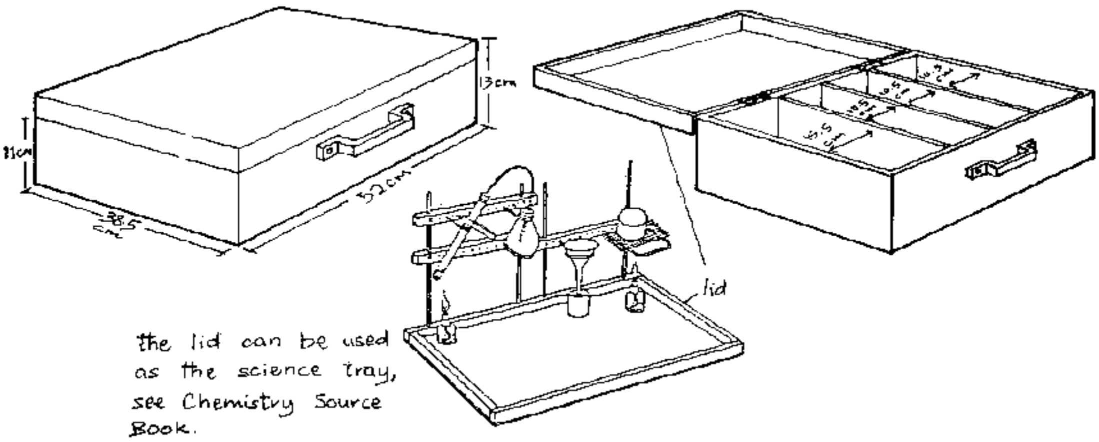

In addition to the materials listed above you need the following materials according to the experiments you choose:

2.1.1 Rubber band, thin wire, small plastic bags (groundnuts)
2.1.2 Bicycle, meter band
2.1.3 Thread, nut or small stone
2.1.4 Watch, meter band (better 10 m thread)
2.1.5 Thread, wooden ruler, small plastic bags, thin wire
2.1.6 Clothes-peg, wire (2 mm), thread
2.1.7 Plastic bags (groundnuts)
2.1.8 Small plastic bags (groundnuts)
2.1.9 -
2.1.10 Wooden stick, kerosene
2.1.11 -
2.1.12 5 m string
2.1.13 -
2.1.14 -
2.1.15 Sewing needle (or a piece of bicycle spoke), insulated wire, 1.5 V dry cell
3.1.1 Matchbox, smooth table or plank, some bricks, a small stone
3.1.2 The same as 3.1.1
3.2.1 A stone, a rubber band, a ball of mud
3.2.2 Card board or wooden lath, rubber band
3.2.3 -
3.2.4 -
3.2.5 Newton balance, see p. 15
3.2.6 -
3.3.1 Stone
3.3.2 A large and a small stone, string, ball
3.3.3 Newton balance, see p. 15
3.3.4 Beam balance, weights, see p. 10
3.3.5 A pencil, a strip of paper, (table)
3.3.6 A toy pick-up or an open box, some card
3.3.7 A large paper

3.3.8 A large paper
3.3.9 A large paper
3.3.10 A large paper
3.4.1 Sheet of cardboard, thread, 7 equal clothes-pegs
3.4.1 Sheet of cardboard, stone, string, pencil
3.4.3 -
3.4.4 14 nails of 2-inch length, piece of wood
3.4.5 Pencil
3.4.6 A candle, some card
3.4.7 A coin, 2 forks
3.4.8 A potato, 2 forks, pencil, bottle, some card, string
3.5.1 Wooden stick, a flat piece of wood
3.5.2 Book, table, piece of cloth
3.5.3 Oil or margarine
3.5.4 -
3.5.5 Book, about five round pencils or drinking straws
3.5.6 Large paper
3.6.1 Stone, thread, Newton balance (see p. 15), measuring cylinder
3.6.2 Rubber stopper, piece of glass or transparent plastic tubing, beam balance, (see p. 10
3.7.1 Book, pencil
3.7.2 -
3.7.3 Bucket, a 'ngata'
3.7.4 Plastic bag
3.7.5 Large tin with air-tight lid, e.g. a charcoal stove, small tin or cup
3.7.6 Drinking glass or jam glass, smooth card or plastic sheet
3.7.7 Bottle, plastic bag, string, straw
3.7.8 A piece of transparent plastic tubing, string
3.7.9 Plastic or rubber tube
3.7.10 One way syringe from a hospital
3.7.11 Bicycle pump, large paper
3.7.12 Large paper
3.7.13 Large paper
3.7.14 Large paper
3.8.1 Stone, thread, Newton balance, measuring cylinder
3.8.2 Matchbox, small stone, Newton balance, overflow can (see p.25), measuring cylinder
3.8.3 Bottle, small piece of styrofoam
3.8.4 Drinking straw, a piece from a plastic bag, thread, bottle or test tube
3.8.5 Salt, egg
3.8.6 Candle
3.9.1 Wooden block, Newton balance, thread
3.9.2 Like 3.9.1
3.9.3 Rubber band, stone, branched stick
3.9.4 Stopper, used bulb, paper, burner
3.9.5 Stone, string
3.9.6 3 clothes-pegs, thread, matches
3.9.7 Funny jumper (see p.21)
3.9.8 String (to measure height), stone, watch
3.10.1 Heavy stone, tipped stone
3.10.2 Wooden block and bar, some weights (see p. 10), string
3.10.3 Wooden lath, wire (diameter 2 mm), 1 cork, card, string
3.10.4 Two pulleys (see 3.10.3), string, Newton balance
3.10.5 Two broomsticks, rope of about 5 m length
3.10.6 Table or plank, some bricks, toy car, string, Newton balance
3.11.1 Wire (2 mm), thin wire, 1 seed, 1 small fruit, 1 bulb (1 torch bulb, battery, connecting wires), 1 bottle
3.11.2 Stone, string
3.11.3 Long string for measuring distances
3.11.4 -
4.1.1 Some salt
4.1.2 -

4.1.3 Pieces of cotton, canvas cloth, small polythene bag
4.2.4 Orange peels
4.2.5 Umbrella or big plastic sheet
4.1.6 Simple balance (see 2.1.5)
4.2.1 -
4.2.2 -
4.3.1 Some potassium manganate(VII) (permanganate; or other solid colouring agents)
4.3.2 -
4.3.3 -
4.3.4 -
4.3.5 -
4.3.6 -
4.4.1 2 clean glass pieces (of a broken window)
4.4.2 -
4.4.3 Razor blade, fork
4.4.4 -
4.4.5 Some detergent or soap
4.4.6 2 glass sheets of about 10 cm x 10 cm, rubber bands or string
4.4.7 Stick of chalk, plotting paper or newspaper
4.4.8 Piece of cloth
4.4.9 Thread
4.4.10 -
4.5.1 Rubber band, plastic bags (groundnuts)
4.5.2 2 tall small bottles (or test tubes)
5.1.1 -
5.1.2 Small bottle, cork stopper, empty ball point tube
5.1.3 Large sheet of paper, ruler, writing facilities
5.1.4 Some oil
5.1.5 -
5.1.6 -
5.2.1 2 Wooden blocks, 30 cm wire (about 2 mm diameter), pin needle
5.2.2 -
5.2.3 2 razor blades, 1 clothes-peg
5.2.4 Thin copper wire (from used motor coil)
5.2.5 -
5.2.6 Aluminium paper from cigarette packages
5.2.7 The same as 5.1.2
5.2.8 -
5.2.9 Soda or beer bottle
5.2.10 The same as 5.2.9, plus tin for a water bath
5.3.1 Some ice
5.3.2 -
5.3.3 Some spirit or petrol
5.3.4 -
5.3.5 -
5.3.6 -
5.3.7 Piece of ice
5.3.8 Some salt, piece of ice, plastic dish (or plate)
5.3.9 -
5.3.10 -
5.4.1 A ball (from children)
5.4.2 -
5.4.3 Wire, plastic rod, wooden rod (all of similar size)
5.4.4 30 cm wire (2 mm diameter)
5.4.5 -
5.4.6 Saw dust
5.4.7 -
5.4.8 Shiny tin, 2 wooden sticks
5.4.9 2 identical shiny tins
5.4.10 -

6.1.1 A rope of about 6 m length
6.1.2 Tin, string, some newspaper, glue, ink or fine sand
6.1.3 Table or chair
6.1.4 Thread, stones of different masses, watch
6.1.5 Rubber band, stones of different masses, watch
6.1.6 Tin, paper, string
6.1.7 Water tank, etc
6.1.8 Ink or potassium manganate(VII) (permanganate), a plate, plastic bag
6.1.9 Piece of cork, light wood or polystyrene, dropper (see 6.1.8), plate
6.1.10 -
6.2.1 2 empty tins, string
6.2.2 2 pieces of metal
6.2.3 2 spoons, string
6.2.4 Table
6.2.5 Some metres of a thin wire, two poles
6.2.6 Plastic bucket, 2 stones
6.3.1 Plate or tray, straight metal, plastic or wood barrier, rectangular block
6.3.2 Wall or door, 2 paper cones, a sheet of cardboard
6.3.3 A window with burglar bars, rope of about 5 m length, a stick
6.3.4 A garden hose pipe
6.3.5 Tall building or wall
6.3.6 Tall tin or jar, a clock, a sheet of cardboard
6.4.1 A soft board, thread, 2 pencils, various stones
6.4.2 4 equal soft drink bottles
6.4.3 A wooden block (better: a box), bicycle spokes
6.4.4 A bamboo tube (1.5 cm x 30 cm)
6.4.5 Empty tin with lid, wooden stick, string
6.4.6 Wooden box, timber bars of different wood and thickness, 2 sticks
7.1.1 Wooden blocks as stands, cardboard, candle
7.1.2 Manila sheet, string
7.1.3 Candle, pinhole camera (see 7.1.2)
7.1.4 Pencil, candle, white paper
7.1.5 2 candles, otherwise like 7.1.4
7.1.6 Glass bottle, damp paper etc., (torch), some cards
7.1.7 Comb, white paper, piece of cardboard
7.1.8 Torch, piece of card, piece of white card or paper as screen, pencil
7.2.1 2 plane mirrors, candle
7.2.2 Spherical spoon or concave mirror, white card, candle, sheet of white paper
7.2.3 Like 7.2.2 plus candle, sheet of white paper
7.2.4 Spherical spoon or convex mirror, candle, white paper, needle
7.2.5 Transparent glass-pane, candle, bottle
7.2.6 2 mirrors, rectangular box
7.2.7 Paper, plane mirror
7.3.1 Coin, lid of a jam jar
7.3.2 Transparent bottle, coin
7.3.3 Glass or jam jar, pencil
7.3.4 Pin or needle, cork, glass or jam jar
7.3.5 -
7.3.6 -
7.4.1 Convex lens or opened bulb (see p. 110), paper
7.4.2 Concave lens or soda bottle bottom or wire loop of 8-10 mm diameter
7.4.3 Manila sheet, opened bulb (see p. 110) or convex lens, parchment paper
7.4.4 Simple box camera (see 7.4.3), window or candle
7.4.5 -
7.4.6 Thin wire or opened bulb (see p. 110)
7.4.7 Wooden box, metal strip, plane mirror, thin wire loop of 3 mm diameter
7.4.8 Box camera (see p.90), plane mirror, parchment paper
7.4.9 Large sheet of paper
7.4.10 Box camera (see p.90), convex lens
7.4.11 Box camera (see p.90), concave lens

7.4.12 Some paper
7.5.1 Glass prism, white paper as screen, second glass prism or convex lens
7.5.2 Plane mirror, dish, white paper as screen
7.5.3 Hose pipe
7.5.4 White card, blue, green and red pencils or felt pens, string
8.1.1 Magnet (e.g. from discarded loudspeaker) plus materials listed on p.98
8.1.2 Magnet, magnetised steel needle (see 8.1.3), thread
8.1.3 Needle, magnet
8.1.4 Needle, magnetised pin or needle (see 8.1.3), paper, small pieces of wood or cork
8.1.5 Bicycle spoke, thin insulated copper wire (from old motor coil), 3 radio batteries, insulated wire, iron filings or bits of steel wool
8.1.6 The same as in 8.1.5 plus burner
8.1.7 Paper, bar magnet or magnetised steel needle, iron filings or bits of steel wool
8.1.8 Magnetised knitting needle (see 8.1.3), thread
8.1.9 Wooden pin, bowl, magnetised razor blade
8.1.10 Metal rod or needle, 2 magnetised needles or steel nails, thread
8.2.1 Plastic pen, piece of paper
8.2.2 2 plastic pens, thread, glass bottle, silk (e.g. baibui) or polyester material
8.2.3 Polythene sheets from transparent covering of a cigarette package or a plastic bag, piece of wood
8.2.4 Small piece of aluminium foil, cotton thread, plastic ruler or pen
8.2.5 Tap with water, plastic pen, woolen cloth
8.2.6 Balloon, wooden or synthetic cloth
8.3.1 2 radio cells, torch bulb, connecting wires, 2 metal strips, clothes-peg, plus materials listed on p. 104
8.3.2 Torch bulb, 8 metal strips, 3 radio cells, insulated wire for connecting
8.3.3 2 radio cells, 2 bulbs, 2 bulbholders (see 8.3.1), switch (see 8.3.2), insulated wire
8.3.4 2 radio cells, bulb holder (see 8.3.1), switch (see 8.3.2), insulated wire
8.3.5 2 radio cells, bulb, bulb holder, resistance wire or long wire from steel wool, insulated wire for connections
8.3.6 4 radio cells, insulated wire, torch bulb, cell holder, bulb holder
8.3.7 Styrofoam, 8 cm steel wire (from steel wool), insulated wires, 4 radio cells, some pieces of wood
8.3.8 3 radio cells, very thin steel wire (from steel wool), torch bulb, switch, insulated wire, piece of wood
8.3.9 2 radio cells, bulb, bare copper wire, insulated wire, switch, salt
8.3.10 3 radio cells, switch, 1-2 mm copper wire, insulated wire, needle, thread
8.3.11 3 radio cells, switch (see 8.3.2), insulated wire, thin insulated wire (e.g. from a motor coil)
8.3.12 4 radio cells, switch, insulated wire, 2 magnets or U-magnet, wooden stand for the magnets
8.3.13 Worn out radio cell
8.3.14 Bicycle with dynamo and headlight

Questionnaire

Questionnaire About "Sourcebook
for Teaching Physics to Beginners with Locally Available Materials"

(Please tick the relevant answers)

Teacher ☐ O'Level student ☐

Other occupation ....

Male ☐ Female ☐ Domicile village ☐ Town ☐

Country ....

I have used the Sourcebook for private studies ☐
in my occupation ☐

I like ....
....

I dislike ....
....

The book helped me ....
....

I think the following parts should be omitted
....
....

I would like to see the following topics added to the book when a new edition is made ....
....

Further comments: ....
....

Please send to: **Mzumbe Book Project,**
P.O. Box 19 Mzumbe,
Morogoro - Tanzania.

This book .....

• emphasizes learning Physics by doing without which no scientific development can take place.

• describes how to make a Physics Kit which is a minilab by itself. It can be used to equip schools which luck laboratory equipment for Physics with locally available materials.

• Students can even make their own Physics Kit and use it as a home lab to promote their talents in Physics.

• promotes creativity and shows that creative Physics lessons can take place in any scientific development.

• tries to make teachers and students aware of the resources available in heir environment which may be used for the teaching and learning of Physics and other science subjects.

ISBN 9987 552 11 0
Low priced edition

Mzumbe Book Project
P.O. Box 19 MZUMBE, MOROGORO - TANZANIA

CODE/OCED

Sponsored by:
Canadian Organization for Development through Education

BIOLOGY
SOURCE BOOK
FOR ENJOYABLE TEACHING AND LEARNING

SOURCE BOOK

IDEAS FOR TEACHING BIOLOGY TO BEGINNERS WITH LOCALLY AVAILABLE MATERIALS

IDEAS FOR TEACHING, LEARNING AND ASSESSMENT BY DOING

MZUMBE BOOK PROJECT

P.O. Box 19, MZUMBE,
MOROGORO - TANZANIA

This source book is the result of a workshop held at Morogoro Secondary School (Tanzania) from July 13th to 25th 1992. The workshop was organised by the Ministry of Education and Culture in cooperation with the Goeth - Institut (German Cultural Institute).

Workshop Administrative Coordinator:

Ignatius Sarikoki,
Ministry of Education and Culture, Tanzania.

Subject Coordinator:

Hans Schimidt,
6106 Erzhausen, Germany.

Editing Coordinators:

J.B.A. Mihigo, Mzumbe Book Project.
Andy Byers, VSO (Cumbria).

Editorial Committee:

C. Gunze, M. Sawaya, V.J. Mushi, R. Dumba,
M.S. Shuma, J. Bower, A.S. Mrutu, S. Kunambi.

Graphic Design Team:

C. Mdachi, S. Simon, P. Ndunguru, Andy Byers.

Invaluable ideas and comments contributed by:

Mr. M. Sawaya and Mr. A.S. Mrutu (Inspectorate, Ministry of Education and Culture, DSM), Mr. C. Gunze (Institute of Curriculum Development, DSM), Mr. Steve Byers (Myers Grove School, Sheffield, Gt. Britain) and Mr. Julian Tetlow (British Council).

This workshop project was sponsored by:

- Ministry of Education and Culture, Tanzania.
- Ministry of Education and Culture,
- Hessen, Germany.
- Goeth e-Institut, Dar es Salaam.

This low-priced edition is sponsored by:

- Canadian Organisation for Development through Education (CODE).
- Partnership Furtherance with the Third World (APDW), Karlsruhe, Germany.
- Voluntary Service Overseas (VSO).

Special technical assistance was sponsored by:

- Fa, Merck, Darmastadt, Germany.

Type set by Mrs A.R. Mihigo

Darkroom tecinique:

M.E. Mwano, E. Mwombeki.

ISBN 9987 552 12 9

List of Participants:

Sr. A. Joseph
St. Peter's Seminary, Morogoro.
B.S. Matee
Jangwani Secondary School, DSM
C. Masatu
Butimba Teacher's Coollege, Mwanza
C.S. Mwinuka
Kleruu Teacher's College, Iringa
Robinah Dumba
Institute of Teacher Education, Kyambogo, Uganda.
E. Kabare
Mzumbe Secondary School, Mzumbe
E.M. Lyimo
Mgulani Secondary School, DSM
G.L. Mwipopo
Kleruu Teacher's College, Iringa
H.L. Kimaro
Moshi Secondary School, Moshi
I.M. Kibanga
Kleruu Teacher's College, Iringa
MAI. Philip
Mawenzi Secondary School, Moshi
M.I. Kilato
Forodhani Secondary School, DSM
M.S. Abdallah
Mpwapwa Teacher's College, Mpwapwa
G.J. Mumgambo
Korogwe Teacher's College, Korogwe
N. Mwaikambo
Lugalo Secondary School, DSM
N. Foya
Tegeta Secondary School, DSM
S. Kunambi
Morogoro Secondary School, Morogoro
N.J. Shuma
Arusha Secondary School, Arusha
J. Bower
Muni National Teacher's College, Arua, Uganda
A. Byers
Netherhall School, Maryport, Cumbria, Gt. Britain
C. Gunze
Institute of Curriculum Development, DSM
V.J. Mushi
Inspectorate, Ministry of Education and Culture,
DSM
M. Sawaya
Inspectorate, Ministry of Education and Culture
DSM
A.S. Mrutu
Inspectorate, Ministry of Education and Culture,
DSM

Printed and Bound by

Mzumbe Book Project
P.O. Box 19 Mzumbe
Morogoro - Tanzania

Contents

Foreword

Biology is about the living world. It concerns the structure and organization of living things and how they work. It is becoming increasingly obvious that such a knowledge is essential in order to derive the maximum benefit from our environment without damaging it for ever. Debates on such issues now range from local to global level, and increasing public awareness and media coverage of environmental matters has served to focus attention on the importance of Biology more than ever before.

In the past, Biology as a subject was often regarded as academically inferior to and intellectually less demanding than the other pure sciences. However, recent advances in areas such as biotechnology and genetic engineering have shown this to be totally untrue. Even at its simplest levels, Biology is a fascinating subject, dealing as it does with ourselves, our surroundings, the complex interaction between physical and chemical processes.

Biology is essentially a practical subject based on enquiry, observation and experimentation. This book follows that theme throughout, whilst also drawing on the natural curiosity of the young person. By emphasizing the use of locally available materials, the text becomes a starting point for a learning process, which is easily related to the familiar surroundings of the pupil! Thus Biology ceases to be an abstract topic and becomes relevant to everyday life. Another major feature of this approach is "learning by doing," that is the active involvement of the pupils, and a movement away from traditional and considerably less effective teaching strategies such as the familiar "chalk and talk education". This book is intended to provide a stimulating source of ideas for both teacher and pupil and above all to make Biology enjoyable. For that reason, the environmental approach can be justified on both psychological and educational grounds. The simplicity of some of the activities and of the local materials used, should not be seen as an inferior substitute for complicated investigations involving expensive and sophisticated scientific equipment. Rather it is an acknowledgment that science is more about developing an enquiring mind, than memorizing facts (following the pattern from the simple to the complex, from the familiar to the unknown). Furthermore the science of Biology is all around us, and so, even more than in other sciences, its teaching should not be restricted to the classroom. The shamba, the village or the school compound can provide fruitful areas of study and rich sources of material. For this reason many of the activities can be done by the pupils without assistance, even at home.

It is hoped that this book will have a wide appeal to pupils, teachers, student teachers and teacher trainers, and its use will contribute not only to the improved teaching and learning of Biology but to a general awareness of the importance of Biological issues in every aspect of modern life.

L.K. MSAKI
Commissioner for Education

Preface

This sourcebook is addresssed to all those who are concerned with the teaching of Science at the Junior Secondary School level. This includes the Teachers, Teacher Training College Tutors and University Lecturers. Nevertheless, the book will also be useful to Science Club Organisers, the Student or Anyone who wants to experiment on their own. The main audience is the teacher and tutor who work in inadequate teaching and learning conditions trying to encourage students to develop skills to understand, control and wisely use science in their daily life.

This sourcebook is the result of an International Workshop which drew participants from Uganda, Tanzania, Germany and Great Britain.

This participants developed and tested ideas, experiments and activities which can be quickly performed in any classroom using a few low or even no cost materials. Moreover, these practicals do not require a great deal of preparation.

Such easy and enjoyable activities and experiments have a long standing tradition in the history of teaching science. They are often called "hand experiments" because most can be performed without commercial equipment but by hands alone.

You will find ideas and suggestions which are not normally found in science textbooks. We assume that teachers are familiar with most of the traditional experiments which are found in the set textbooks. Therefore we feel there is no need to repeat all of them here. The reader will welcome the ideas on how to bring teaching up to date, since this book provides not only "how to do it" and "what to do", but "why" with clear, simple explanations.

Going through this book, the reader will find that many traditional experiments can be performed as "hand experiments" too. They are more illustrative and more appealing to the students than "black-box experiments" with sophisticated commercial equipment. They encourage the students' creativity to invent other experiments and activities and stimulate their natural curiosity to understand the biology of everyday life.

The suggestions in this sourcebook are stimulants to modern teaching and learning i.e. *teaching and learning by doing.* They should be supplemented with the teachers' own ideas, the students' ideas and ideas from other sources.

We acknowledge with gratitude the professional, technical and financial assistance of all who have contributed to publish this sourcebook particularly to the Ministry of Education and Culture of the State of Hessen (Germany) and the Goethe-Institut for sponsoring the workshop.

Last but not least, we thank Morogoro Secondary School for hosting the workshop from which this source book resulted.

A.S. NDEKI

Chairman of the Executive Committee

Mzumbe Book Project

How to Use This Book

This source book may be used with any Biology textbook. It offers such as variety of ideas that any teacher should find something that fits into their own pattern of teaching. Teaching is such a personal art, that it would be wrong to suggest one simple approach to teaching Biology. To enrich Biology learning we must consider *how* to teach the subject as well as *what* we teach.

This book incorporates a selection of activities for lower secondary level (Form 1 and 2) most of which can be carried out with materials to be found around the school and home. These activities do not require a lot of materials and in many cases none. Wherever possible we selected low cost or no cost materials.

With a basic tool kit of just ten items most of the suggested activities and models can be performed or constructed. These ten tools are all available locally (see appendix).

Time is also a limiting factor for many teachers. The preparation for and carrying out of activities may seem to use up the time available for covering the syllabus. For this reason we have, especially selected so called "hand experiments" which can be done in a very short time and with a minimum of preparation or even with none! So the editorial team has considered the reality of daily school life, to overcome difficulties imposed by lack of time and facilities.

It should not be forgotten that work done outside school time is an essential and integral part of biology as is the classroom teaching. The suggested activities can be carried out and enjoyed by science clubs and individuals. However it should be noted that some of these activities need the guidance and supervision of an experienced adult in order to avoid any risk and to derive the utmost benefit. A pupil may not be aware of the risks of a harmless looking experiment. For this reason our book is not directly addressed to the unsupervised pupil.

P: The *procedure* describes what is needed and how to carry out the activity.

Q: These are suggested *questions,* which the teacher may ask themself or the student. A guide to proper observation and explanation.

O: Possible *observations* are described.

E: The *explanation* of the observation is outlined. The teacher should insist that all observations be discussed and as far as possible, explained. This is an integral part of scientific working.

I: Some activities give *additional information.* Important safety precautions are printed in italics.

We warmly welcome your opinions, suggestions and constructive criticisms of the content and layout of this sourcebook. Please fill in the questionnaire at the back of this volume and send it to us. With your help we can improve the future editions of this book.

The Sourcebook Team
Mzumbe Book Project
P.O. Box 19
Mzumbe - Morogoro
Tanzania.

1. Introduction to Biology

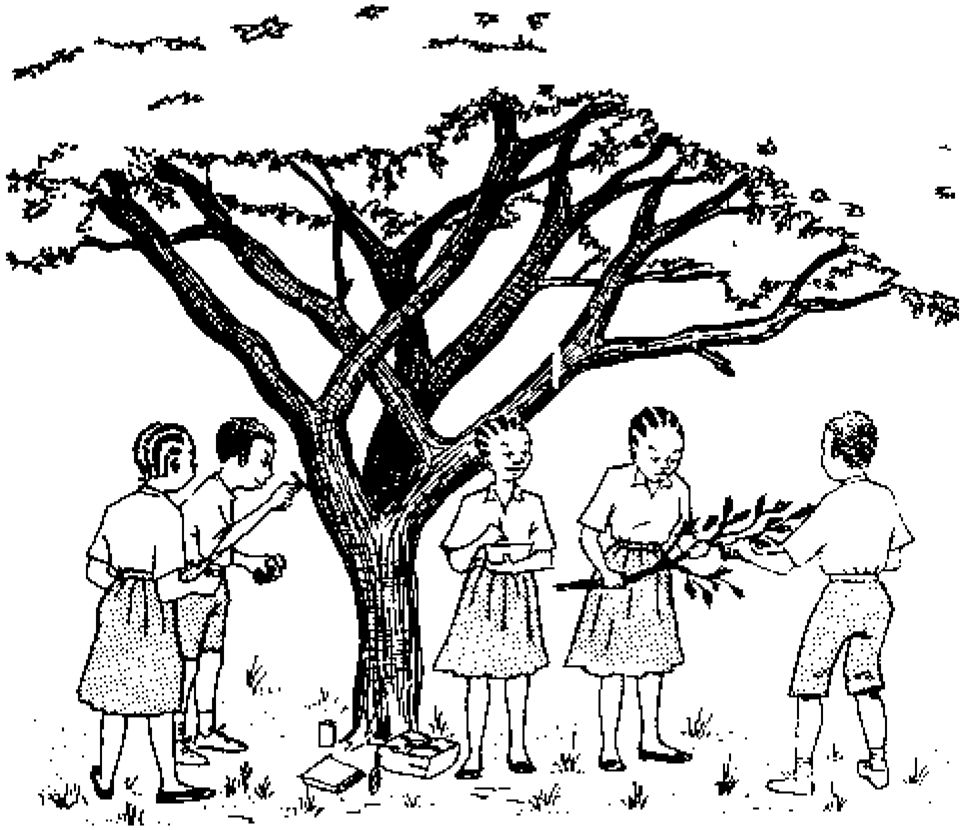

1.1. Characteristics of Living Things

The study of living organisms is called *Biology.* All living things have certain characteristics in common with each other. They are in dynamic equilibrium with their surroundings, constantly taking in some substances and giving out others;. While inside the organism many of these substances undergo changes. This process is called *metabolism* and it enables the organism to maintain a constant internal environment, regardless of external changes. Maintaining such an internal equilibrium is called *homeostasis.*

Seven specific characteristics can be identified, which are shown by all living organisms at some stage during their life. These are growth, respiration, response to stimuli, movement, nutrition, excretion, and reproduction.

Some of these characteristics can be shown by non-living things, but only living organisms carry out all seven of them. In addition living organisms are controlled by a programme of instructions contained in their genes, which can be passed on from one generation to the next. The smallest biological structure which is capable of showing all these characteristics of life is the cell. It can therefore be thought of as the basic unit of life.

1.1.1 Metabolism

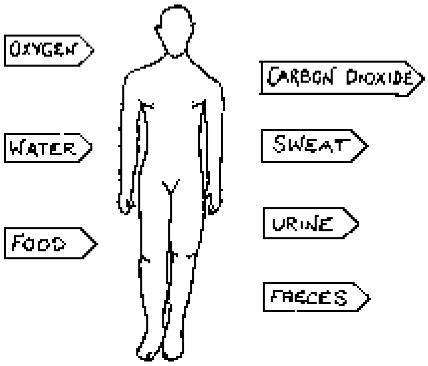

P: Draw an outline sketch of a human being, and make a list of the main substances taken into and given out from the body.

Q: Why are the substances taken in different from those given out?

E: Changes to these substances occur as a result of metabolism. Useful substances are retained by the body while useless ones are removed.

1.1.2 Obvious Characteristics of Living Things

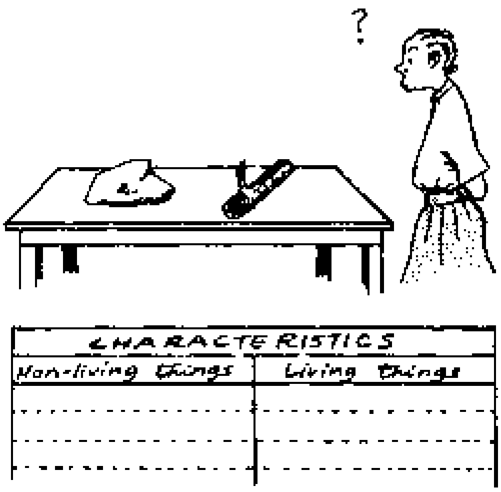

P: Display some non-living things such as a stone, piece of wood, glass of water etc., and list any obvious differences between these things and a living organism (i.e. man). Produce a table from the whole class response.

1.1.3 Other Characteristics of Living Things

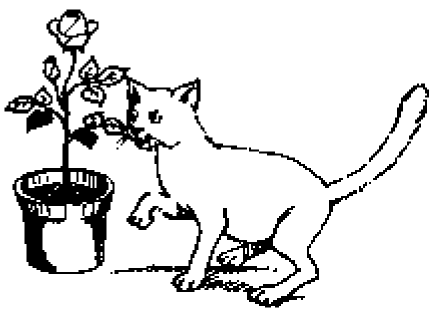

P: Display a potted flowering plant and identify the main characteristics of life. Note that many of these are less obvious in plants than in animals.

1.1.4 Equilibrium in Non-living Things

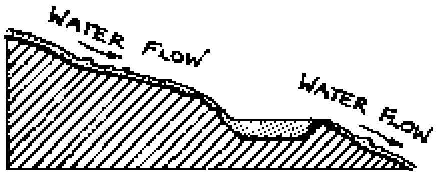

P: Construct a small pond on the school compound with an inlet and an outlet for the water.

Q: What do you observe about the water flow and the water level in the pond?

O: Although the water flows constantly, the level remains the same.

E: Such a phenomenon is called a dynamic equilibrium. Other examples are the flame of a candle and living organisms.

1.1.5 Is a Candle Flame Living?

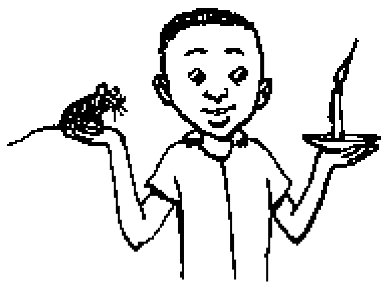

P: Look at a burning candle. The candle flame can be considered as an example of a process in a state of dynamic equilibrium.

Q: What are the similarities and differences between a candle flame and a living organism.?

E: A candle flame is the result of a metabolic process. The candle wax is burnt to carbon (soot) and other gaseous substances. The shape, colour and brightness of the flame remains fairly constant, but only as long as there is a supply of wax and air. The flame is not self-sustained and cannot reproduce itself.

1.2. Variation in Living Things

In Science we are constantly concerned with measuring things in order to make observations and collect data. However, it is a feature of living things that they vary. When we talk about typical features these are based on average data taken from many observations. The differences between individuals determine how they are grouped together or classified. For instance the differences between separate species will be greater than that normally occuring within the same species. These differences are the result of variation, which can be investigated by observing and measuring various examples of "typical features".

1.2.1 Variation in Humans

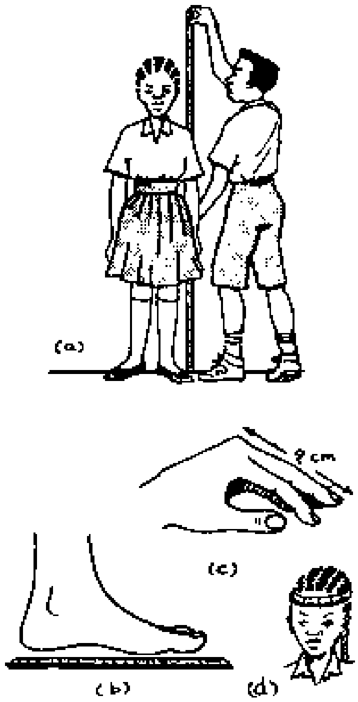

P: Using adults measure (a) their height, (b) length of middle finger, (c) length of foot, (d) circumference of head (taken just above the eyebrows). Adults should be used, since in children, variation will be due to different stages of growth.

Q: What is the range of values (maximum and minimum) and the average values for each measurement taken?

1.2.2 Variation in Leaves

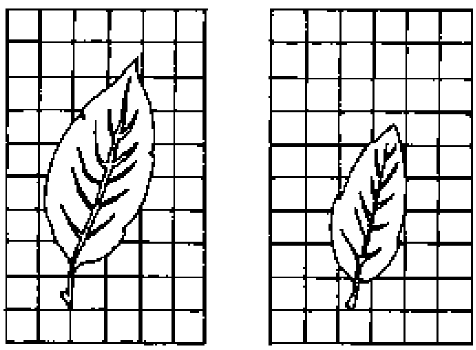

P: Take some leaves from the same plant (or from a plant of the same species) choosing some in the sun and some in the shadow. Measure the surface area of each leaf by placing on squared paper. Count only the squares which are more than half covered. Calculate the average leaf area for each type (i.e. shade leaves and sun leaves).

Q: What are your results?

O: Shade leaves are normally bigger than sun leaves.

E: Shade leaves get less light, so in order to absorb sufficient light for photosynthesis, the surface area is usually larger.

1.3. Collecting and Recording Data

Human progress is due largely to his ability to measure and collect data with ever greater precision and accuracy. Pupils should be taught general skills in obtaining data by carrying out simple experiments. They should be introduced to basic measuring techniques and encouraged to develop skills in the recording and graphical analysis of data. It should be stressed that data be compiled from as many measurements as possible in order to improve their validity.

1.3.1 Data on Height

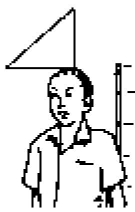

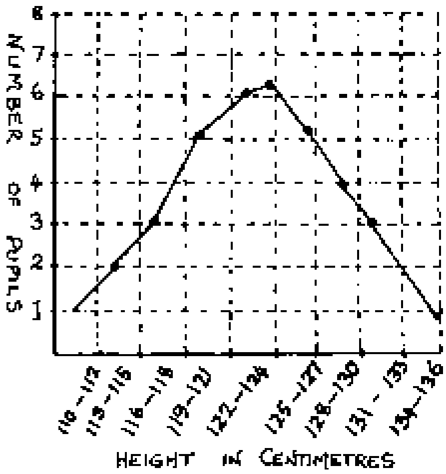

P: Obtain the heights of all the student in the class (in centimetres). Use these heights to divide the students into groups (i.e. 110-112 cms, 113-115 cms etc). Count the number of pupils in each group. Plot a graph of height against numbers.

Q: What does the graph look like and what does this show?

O: A normal distribution curve is obtained showing that a few students are very tall, a few are short, but most of them come somewhere between these extremes.

E: Members of a species can vary in size between a maximum and a minimum value, but most individuals are near the middle of this range.

1.3.2 Analysis of Pulse Rate

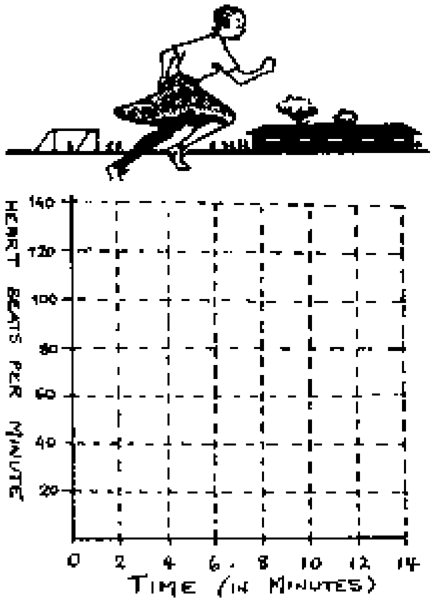

	STRESS					REST					
MINUTES	0	2	4	6	8	10	12	14	16	18	20
FIRST GIRL											
SECOND GIRL											

P: Take the resting pulse rate of ten students, then ask them to run around the school compound for two minutes. Take the pulse of each student at two minute intervals until the pulse returns to normal. For each student plot a graph of pulse rate against time.

Q: Which pulse rate was the highest and which pulse returned to normal most quickly?

O: Each curve of pulse rate will be slightly different

E: This is due to differences in levels of physical fitness of each student. The less fit ones generally reach a higher pulse rate, which takes longer to return to normal.

1.3.3 Growth Measurement

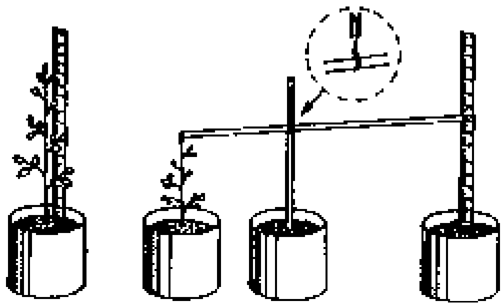

P: Take a seedling in a pot (or use a plant in its natural environment) and attach a fine thread to a light stick (as shown above). Alternatively use the simple method for measuring growth. Make measurements at fixed intervals (say 2 or 3 days). Devise a method of presenting your data graphically.

1.3.4 Weight Increase by Germinating Seeds

P: Place 10 bean seeds between pieces of wet newspaper. Place a second group of 10 beans between dry paper. Measure the weight of each group of beans at daily intervals, and also record any observations.

Q: What are the differences in weight between the two groups of seeds?

O: The soaked beans swell and the weight increases. No change occurs in the beans on dry paper.

E: The beans on the wet paper have absorbed water and started germinating. The dry beans did not.

1.3.5 Obtaining Averages

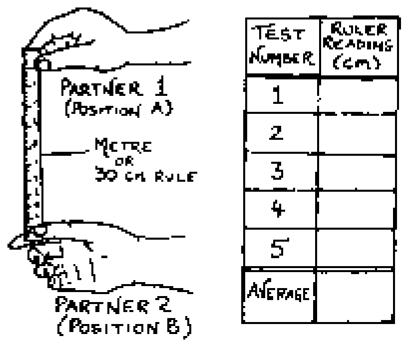

P: Hold a ruler or strip of wood as shown. Ask your friend to place a thumb and forefinger on either side of the ruler at mark O, but without touching it. Release the ruler. Your friend should try to catch it as quickly as possible. Note where the ruler was caught and measure the distance of the point from mark O. Repeat 5 times and take the average.

1.3.6 Keeping a Written Record

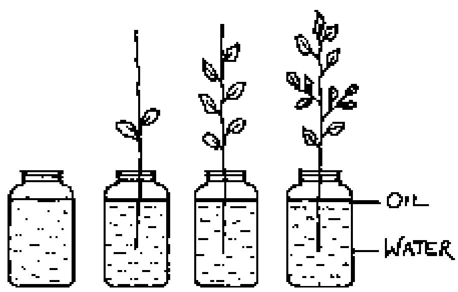

P: Pick branches with different numbers of leaves and place each one in containers with the same volume of water (To avoid loss by evaporation pour some oil on the surface). Record the daily loss of water in each container

O: The more leaves on the branch, the greater the loss of water.

E: Leaves are the organs where most water is lost by the plant

1.4. Scientific Method

Being a scientist is not just a matter of learning a lot of facts. It is more a way of thinking. Being scientific means first making careful observations of objects, organisms or events and then suggesting possible explanations. This explanation is called an *hypothesis.* This should then be tested by designing a suitable experiment or series of investigations. If it does not turn out to be true then a new hypothesis must be proposed and tested by a different set of experiments. As soon as an hypothesis is found to be true it can be applied to other, similar situations.

1.4.1 From Observation to Application

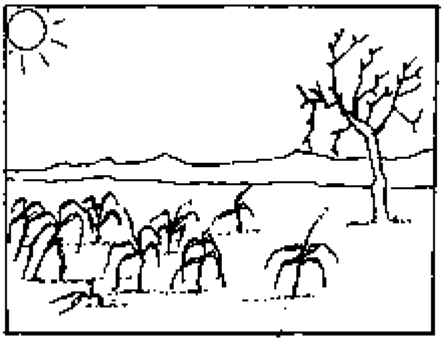

Observation - Without water from rain or by irrigation, the soil around plants eventually becomes dry. This is particularly obvious when plants are grown in pots or other containers. In extreme cases the soil gets so dry that the plant dies.

Hypothesis - the plant requires water, which it absorbs from the soil through its roots. This water is then transported through the plant.

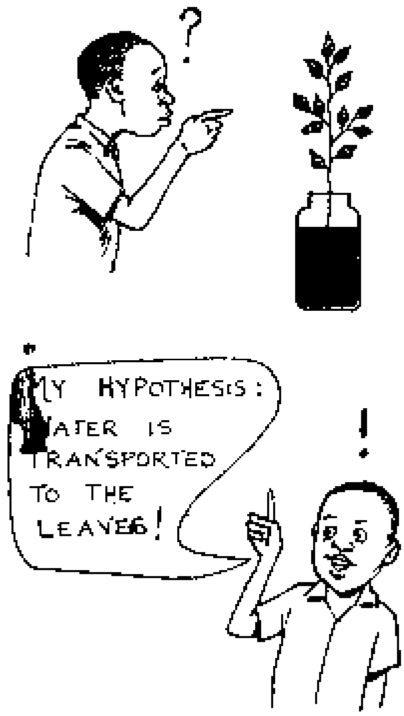

Experiment 1: Place a branch of a non woody plant in a solution of coloured ink.

Observation: After some time the coloured ink is seen in the stem and leaves of the plant. (Also in the petals of the flowers - if they are present). A lot of liquid has been absorbed.

Conclusion: The plant transports water upwards through the stem to the leaves where most of it is probably lost.

Hypothesis: Water is transported to the leaves where it is lost.

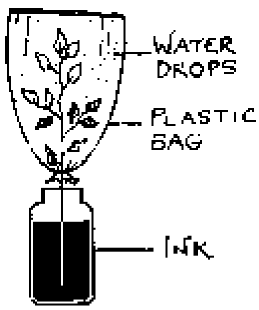

Experiment 2: Using the same materials, as experiment 1, place a plastic bag around one of the branches and tie it tightly to the stem with string or rubber bands.

Observation: Clear (uncoloured) water collects in the plastic bag.

Conclusion: Water evaporates from the leaves and condenses in the plastic bag. The dissolved materials (the colour in the ink) remain in the plant.

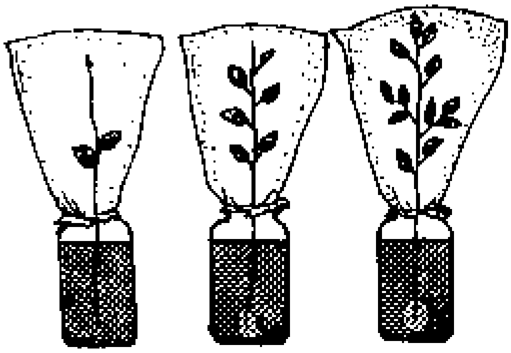

Experiment 3: Using the same materials, place one plastic bag around a single leaf and another around a branch with many leaves.

Observation: More water collects in the bag enclosing the larger number of leaves.

Conclusion: Since water is lost from the leaves of a plant, the larger the number of leaves, the greater the amount of water lost.

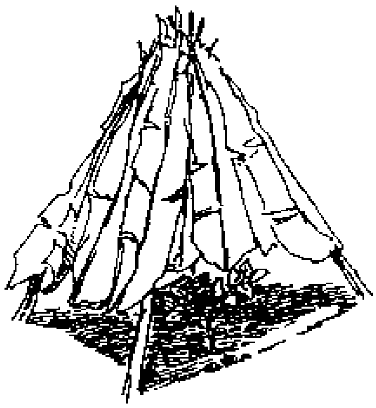

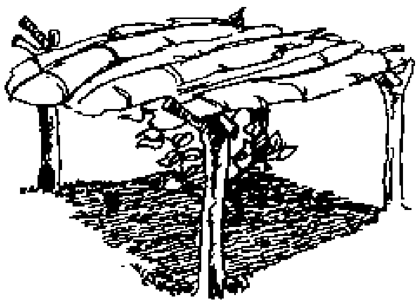

Application. For better growth, plants need to be Supplied with an adequate amount of water. To reduce excessive water losses by transpiration, special methods of cultivation are used. Can you match the above pictures to these methods?

2. Cell Structure and Organisation

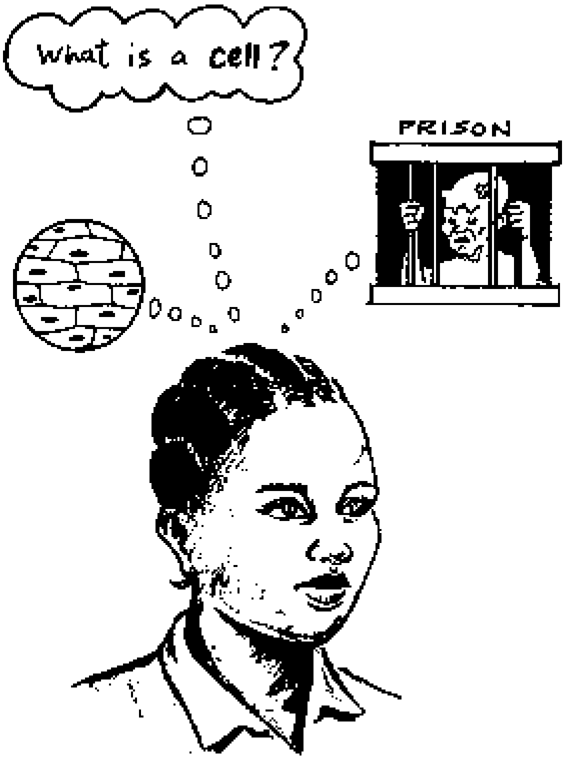

2.1. Cells - Tissues - Organs

Cells are the basic units of all organisms. Some organisms, e.g. protozoa, are composed of only one cell (unicellular), but most consist of very many cells (multicellular). Certain features like cell membranes, cytoplasm and nucleus are common to all cells. Most cells are specially adapted in their size, shape and chemistry to carry out particular functions (for example animal and plant cells). There is a constant movement of substances into and out of cells which is controlled by the membrane. Almost all cells are too small to be seen with the unaided eye, and so a microscope is needed to observe them.

Cells of the same function group together to form tissues. Different tissues form organs and different organs form organ systems. All organ systems together make up the complete organism.

2.1.1 Looking at Onion Cells

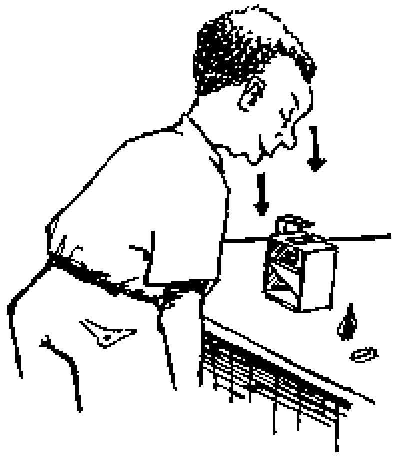

P: Slice an onion into two, lengthways and take out one of the thick leaves from inside it. Cut the inner thin surface of the leaf into squares of 2 x 2 mm. With a pin or needle place one of these squares in a drop of water on a slide or any small piece of window glass. Lower a cover slip carefully on to it and examine the cells with a microscope as described in the appendix. Make a drawing of what you see.

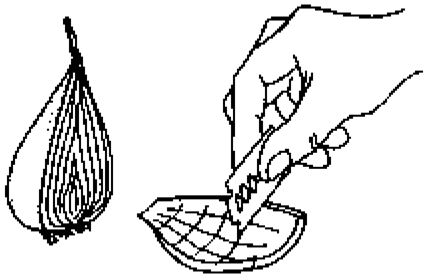

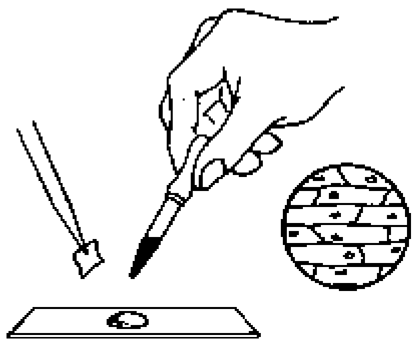

Q: What do the cells look like?

O: Onion cells appear with a dark line around them (the cell wall) and with a dark oval body inside (the nucleus). They are usually packed closely together.

I: The cells can be seen more clearly if a drop of iodine is added to the slide.

2.1.2 Simple Models of Cells

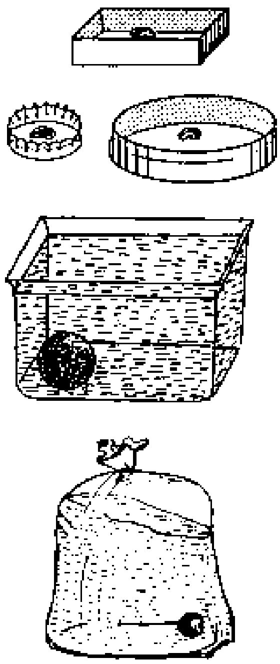

P: Take a small stone or seed and place it in the tray of an empty match box, in a soda bottle top or in any other small container. Prepare a water filled container or plastic bag with seed or stone to represent a nucleus.

Q: What do the sides of the containers, the seed and the space between them represent?

E: The sides represent the cell membrane, the seed, the nucleus and the space between shows the cytoplasm.

2.1.3 Size of Cells

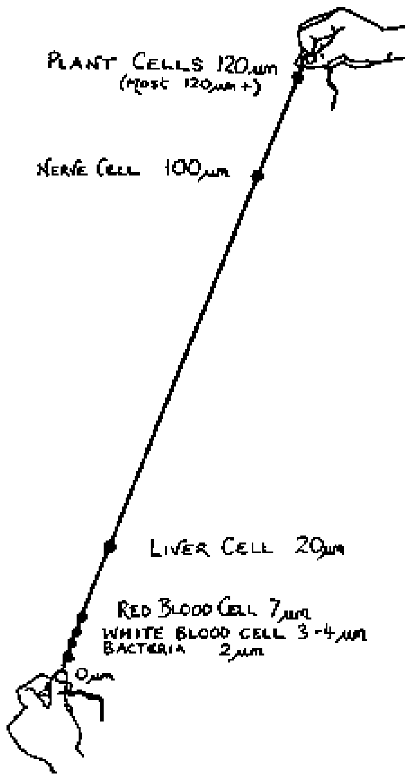

P: Take a piece of string (or chalk a line on the ground) about 60 cm long. Mark distances as shown in the diagram above. The lengths represent the sizes of different types of cells enlarged one thousand times.

Q: How many times bigger is a plant stem cell than a blood cell?

E: 50 times.

I: Although almost all cells are too small to be seen with the unaided eye, they show a wide range of sizes (about the same range as a mouse and an elephant).

2.1.4 Animal and Plant Cells

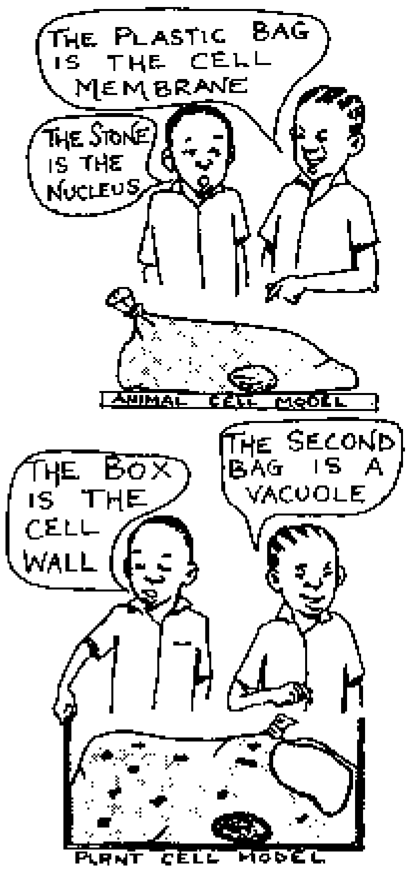

P: Use a plastic bag to represent the cell membrane, a large seed or a stone to show the nucleus and water in the bag for the cytoplasm. For the plant cell place the bag into a cardboard box to show the cell wall. Trapped air or a small air filled plastic bag will act as vacuoles. Small cuttings of leaves can represent the chloroplasts.

Q: What are the main differences between an animal and a plant cell?

E: Plant cells have chloroplasts, cell wall and a large vacuole whereas animal cells do not. Also plant cells are usually larger and have a more definite shape than animal cells.

2.1.5 Breaking Membranes

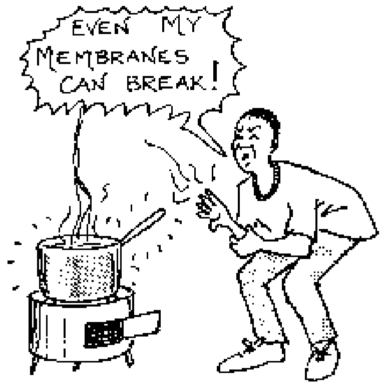

P: (a) Put a grape or an uncut segment of orange in your mouth. Leave it for a few moments without moving your mouth, then chew it slowly. (b) Heat a deep coloured fruit, flower, leaf etc. in water.

Q: Do you taste the fruit before or after chewing? What can you observe about the colour after heating?

O: The fruit can be tasted after chewing and colour is found in the water after heating.

E: The juices containing sugar and other chemicals, which give the fruit its particular flavour, are found inside the cells. They are only released when the membranes are broken, for instance by mechanical forces like chewing and heating.

2.1.6 "Kioski" as a Cell

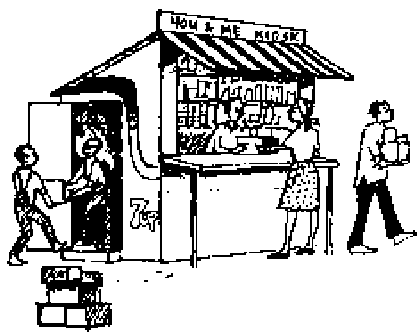

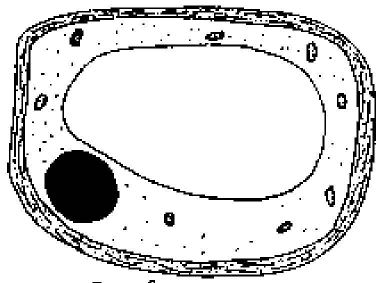

PLANT CELL

P: Observe what happens at a kiosk where goods are sold.

Q: How does the activity at a kiosk compare with a living cell?

E: A kiosk is partly like a cell because

- in a kiosk only specific things move in and out.
- things are taken in and passed out at different rates.
- different types of kiosk sell different goods (just as different cells carry out different functions).

Unlike a cell, the kiosk is not self sustaining and the things given out are the same as those taken in.

2.1.7 Models of Tissues

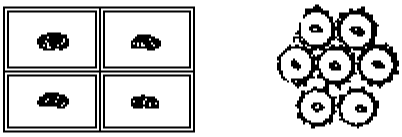

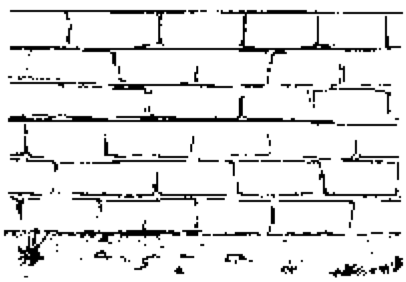

P: Group match box "cells" and bottle tops (see 2.1.2) together to form tissues. Cells and tissues can also be demonstrated by bubbling air through a soap solution with a drinking straw.

Q: How are cells arranged to form tissues?

E: In tissues the cells are all of the same type and are closely packed together like bricks in a wall.

2.1.8 Models of Organs

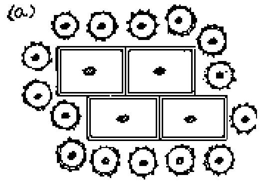

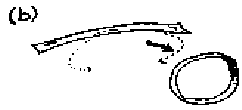

PAPER STRIP MODEL

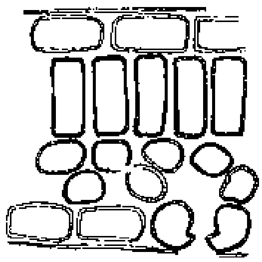

P: Arrange different types of tissues together to form the basic structure of an organ. This can be done by using the tissues formed from match boxes and soda bottle tops (a).

Q: How are tissues arranged to form organs?

I: A model of an actual organ (like a leaf) can be constructed from strips of paper, to show the different types of cells and tissues present (b).

2.1.9 Display of Organs

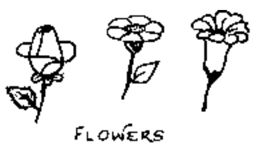

FLOWERS

FRUITS

LEAVES

P: Collect leaves, flowers, seeds and roots from different plants and arrange them in a display. List the function of each structure.

Q: What are the structural similarities between organs performing the same functions?

E: Organs carrying out similar functions are similar in structure, i.e. food storage organs are swollen, leaves are thin and flat, flowers are coloured etc.

3. Classification of Living Things

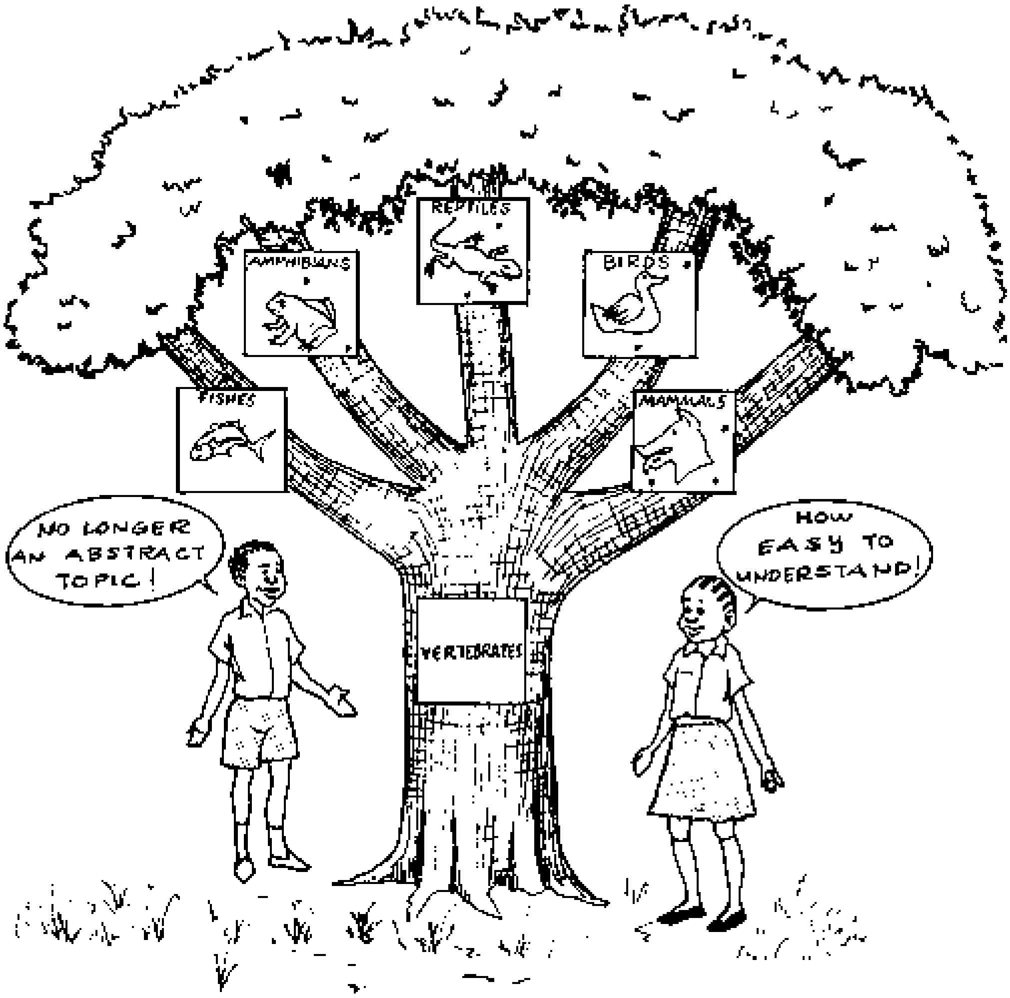

3.1. Biological Classification

Classification is the sorting of things into separate groups in such a way that all items in the same group have certain features in common. Books in a library, types of goods in a shop, vegetables in a market and notes in a bank are all examples of a simple system of classification. Biological classification is more complicated because of the large numbers and diversity of living things, but the general principle is the same. Organisms are placed into groups according to their structure, appearance and the way they live, based on similarities and differences between them. Organisms are first placed into large groups, whose members may only have a few common features, then into increasingly smaller groups where the members have a greater number of similarities. The smallest such group is called a *species.* Organisms of the same species can usually be recognised because they look very similar to each other. Human Beings all belong to the same species. Other examples of a species include a lion, a chicken, a mango tree or a cassava plant. Classifying organisms in this way allows us to recognise them, to study them more easily and to investigate the relationships between them.

3.1.1 Arranging Shapes

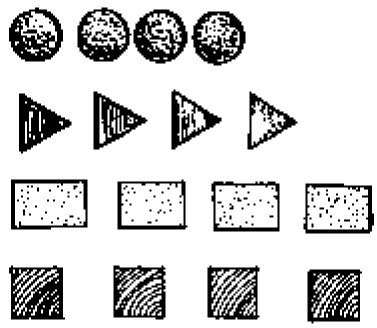

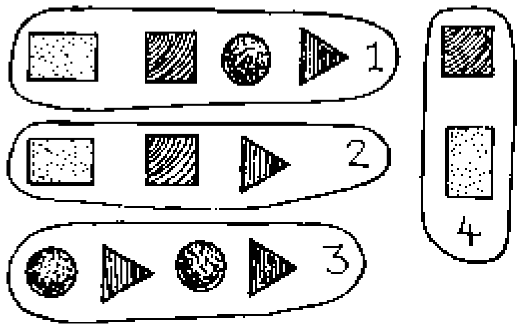

P: Make four of each of the following shapes: squares (3 cm x 3 cm) triangle (3 cm sides) rectangles (3 x 4 cm) circles (3 cm diameter). Mix the shapes and then sort them according to a chosen feature.

Q: How many different ways can you find of grouping the shapes?

O: At least 4 can be found.

3.1.2 Classification at the Duka

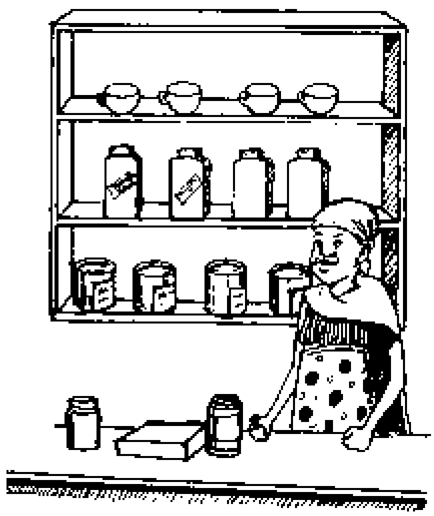

P: Observe how the goods at the local shop are arranged on the shelves

Q: Can you find a pattern in the arrangements on the shelves?

E: The goods will be arranged firstly in large groups, ie. foodstuffs, non-food stuffs (medicines etc.), and then into smaller groups such as foods in tins, foods in bottles, etc..

3.1.3 Find a Missing Person

P: Imagine that you have been asked to find one particular person on earth.

Q: What information would you require?

O: Continent, country, region, district, ten cell block, house, name of person.

E: This procedure can be compared to the process of classifying organisms, firstly in large groups. (equivalent to a continent) then smaller groups (equivalent to country, region etc).

3.1.4 Classification Charts

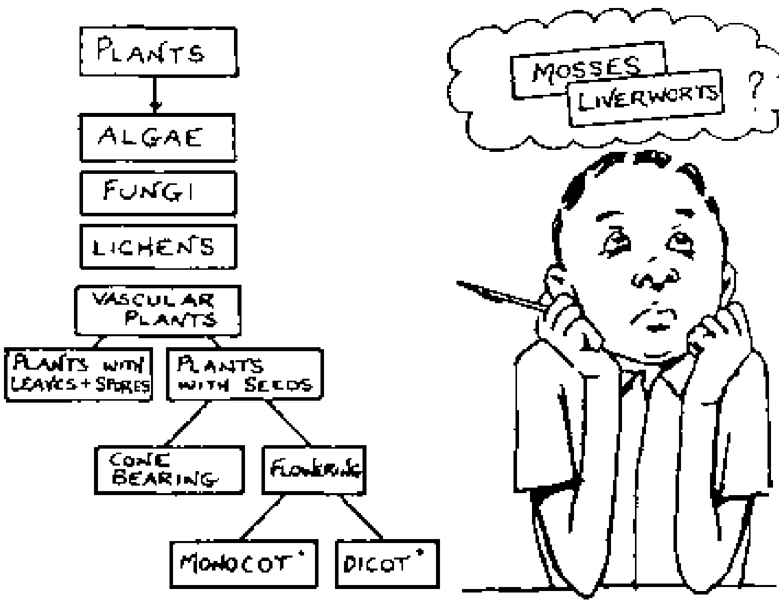

P: Prepare cards giving the names of the main groups of living organisms. Arrange them to show how the living world can be classified into kingdoms, phyla and so on.

E: Kingdoms can be arranged horizontally, phyla vertically.

I: Pictures from magazines or newspapers can be used to illustrate the cards. After mixing use the cards for oral assessment.

3.1.5 Classifying Leaves

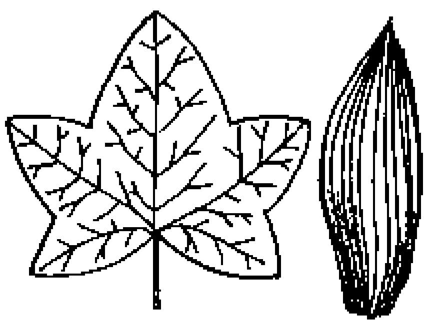

P: Collect leaves from different plants. Make large groups and small groups using as many different characteristics as possible.

Q: How many ways did you find to group the leaves?

E: Characteristics like shape, colour, vein pattern, leaf margin etc. can all be used.

3.1.6 Variety in Insects

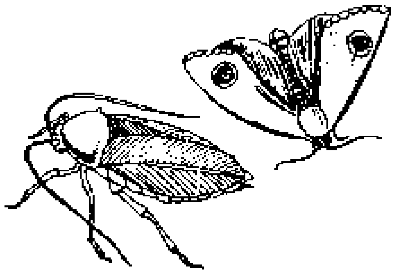

P: Collect at least 5 different types of insect. Identify the obvious external characteristics of each specimen.

Q: What features are common to all insects, and which ones are found only in one particular type?

O: Features like jointed legs, external skeleton, wings and three body regions are found in all insects. Features such as number of wings, shape of wings, shape of body etc., are specific to one type.

3.2. Looking at the Diversity of Organisms

The concept of classification should not be learned by memorising long lists of complicated names, or attempting time - consuming and difficult identification exercises. The diversity of living organisms and the complex interactions between them, should be studied by field work wherever possible. The school compound can provide a rich source of material which is readily accessible. When necessary specimens can be collected and further investigation carried out in the classroom. Please note, however, that removing of organisms from their natural habitat should be restricted to common types and any disturbance of the environment kept to a minimum.

3.2.1 Identifying Trees

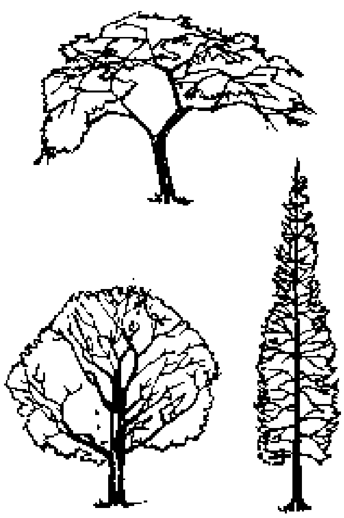

P: Try to find as many different types of trees as possible in the school compound. Make a note of their particular characteristics, such as overall shape, the arrangement of branches, colour of trunk, colour and shape of leaves etc.. Record the names of any trees which you recognise.

Q: Which characteristics are most useful for identifying the trees and which are the least useful?

E: Best features are shape of leaves, types of fruit and flowers. Arrangement of branches, bark colour and size are less useful as they are more variable.

3.2.2 Food Plants

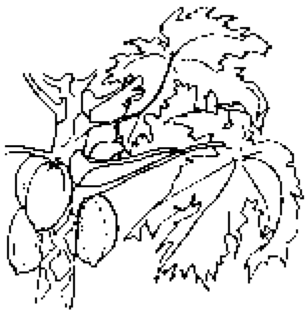

P: Take a walk around your local shambas and record all the types of food plant you see. Make a brief description of each plant. Exchange your description with a friend and see if they can identify the plants you have seen.

3.2.3 Sampling with Squares

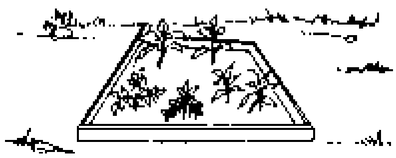

P: Construct a square with 1 m sides from sticks or thin pieces of wood. Choose an overgrown piece of ground on the school compound and place the square on it. Record the names or descriptions of organisms found inside the square.

Q: What differences do you find in the organisms found in different places?

E: The differences will depend on various factors, such as whether the ground is cultivated or not, if it is flat or on a slope, dry or wet and so on.

I: This method can also be used to compare the numbers of organisms found in different habitats. Squares used for sampling are called *quadrats.*

3.2.4 Sampling with Lines

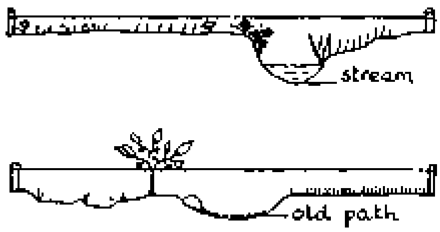

P: Take a piece of string 20m long and divided into 1 m lengths by tying knots. Stretch the string over a piece of ground between two sticks. Working from one end, record all the organisms which the line touches and their distance from the beginning.

E: The organisms found will vary according to the ground over which the string passes. By choosing a site which shows variation, more differences will be found. This technique is called a *line transect.*

3.2.5 Life under a Stone

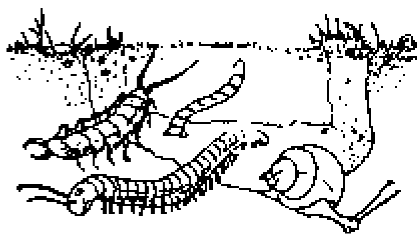

P: Choose a large stone which has not been disturbed for some time. Lift it and record all the organisms you find there.

Q: Can you explain why there are no plants present?

E: No plants will be found since there is no light under the stone. This means this is a very specialised habitat and only certain organisms can live there.

I: Compare the organisms under the stone with those living on top of it (i.e. mosses, lichens and other small plants.)

3.2.6 Life in the Soil

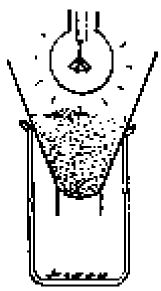

P: Collect about 250g of fresh soil and place in a funnel with a piece of gauze across the neck. Arrange a lamp directly above the funnel and a small container below.

O: Small organisms from the soil collect in the container.

E: Soil organisms usually prefer dark, damp and cool conditions, so the heat and light from the lamp drives them downwards until they drop out of the funnel. The organisms collected can be used to show the range of organisms found in the soil.

3.3. Collecting and Displaying Specimens

3.3.1 Simple Plant Press

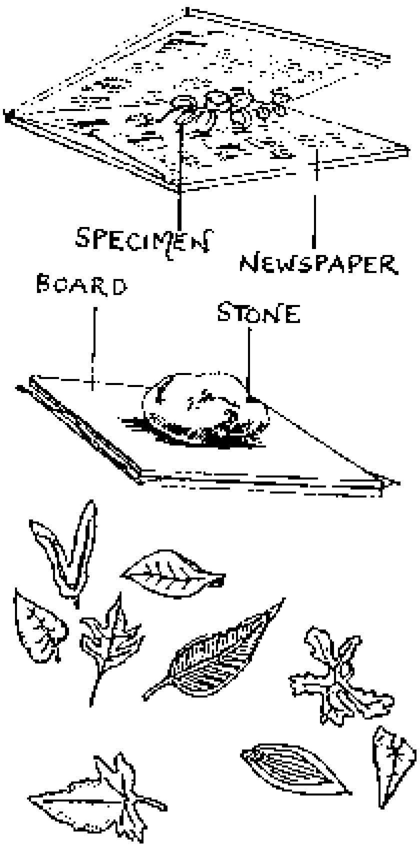

P: Cut two pieces of stiff cardboard, hardboard or thin wood about 30 cm square. Place layers of newspaper between the squares, and arrange the plant specimens between the sheets of paper. Tie together with string or put a heavy weight like a brick or stone on top and leave until the plants are dry.

I: The newspaper may need to be replaced with dry paper to dry the specimens completely.

3.3.2 Making an Herbarium

P: An herbarium is a collection of plant leaves or flowers. After drying in a press they can be fixed to paper with sellotape or glue. Thick paper in a loose leaf file is best, but exercise books can be used instead. Whenever possible give the name of the specimens in English. The place where it was collected and the date should be included. The work of individual pupils can be built into a reference collection or used as a display.

3.3.3 Making a Species Collection

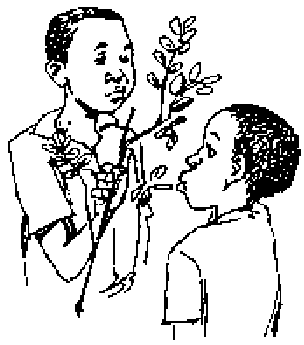

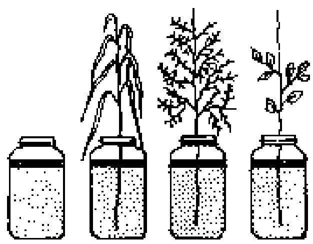

P: Plants which cannot be pressed or other specimens, such as branches of trees, seeds, fruits and small animals can be displayed on a science table or science corner. Many such specimens can be allowed to dry, but if this causes too many changes, they can be kept in jars of water for short periods or in spirit for longer periods.

I: A few drops of domestic bleach in the water will reduce rotting of the specimen by fungi or bacteria. Make sure all specimens are properly labelled and arranged in a systematic and logical way, with a clear indication of what the display is intended to show. This could be organisms in a pond, plants by the roadside, insects found in the home etc.

3.3.4 Collecting Nets

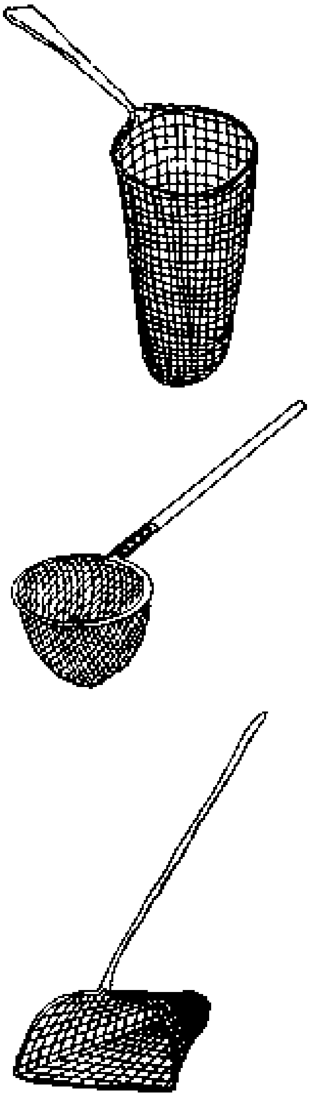

P: A wide mouthed sweep net can be made easily from a stick, some wire and mosquito netting. With this net insects can be knocked off plants. Wire netting is more suitable for water sweep nets.

3.3.5 Pitfall Traps

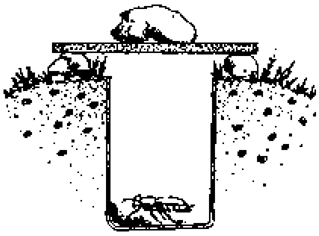

P: A jam jar or tin can be buried in the soil with the rim at ground level. Punch a few holes in the bottom of the tin to let water escape. Cover the tin with wood or a stone to keep rain out. Some fresh food will attract insects.

3.3.6 Sticky Paper Trap

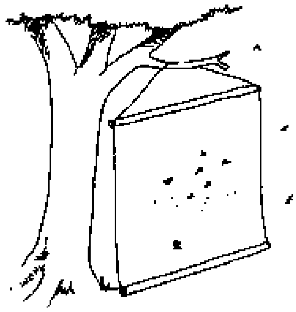

P: Coat a piece of stiff paper with honey, jam or a strong sugar solution. Hang it from a tree. Small flying insects will become stuck to the paper.

3.3.7 Pooter

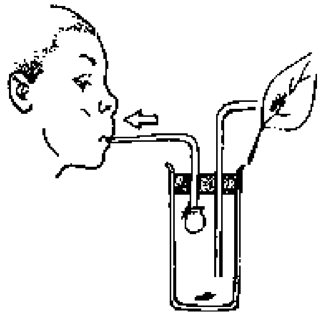

P: A pooter for collecting small animals can be constructed as shown above, from a variety of jars or tins. Cover the tube through which air is sucked with net or cloth to avoid the specimen being sucked into the mouth!

3.3.8 Beating with a Stick

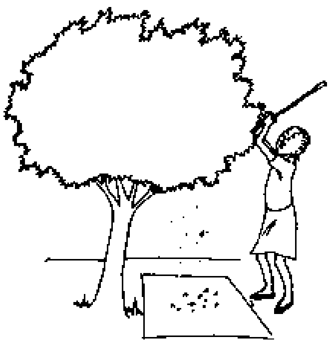

P: Place a white cloth or sheet of newspaper under a tree or bush. Beat the branches with a long stick and the insects fall onto the sheet.

4. Nutrition

4.1. Organic and Inorganic Food Substances

Foods are a mixture of different organic and inorganic chemicals, collectively called *nutrients.* These provide the body with (i) energy (ii) materials for growth and repair (iii) substances for regulating metabolic processes. The main classes of nutrients are carbohydrates, lipids (fats and oils), proteins, vitamins and minerals. Carbohydrates contain the elements carbon (C), hydrogen (H) and oxygen (O), and include sugars, starch and cellulose. With the exception of cellulose, the tough fibrous material found in plant cell walls, they usually provide energy.

Lipids also contain C, H and O, but in different proportions to the carbohydrates. Their main function is storage of energy but they are also important for insulation, protection, formation of hormones and synthesis of cell membranes. Proteins contain C, H and O, but also very importantly the element nitrogen. (They sometimes contain sulphur and phosphorous as well). Proteins are very large and complex molecules, composed of long chains of smaller molecules called amino acids. These provide materials for growth and repair of tissues.

Vitamins are a diverse group of organic compounds which are involved in cell metabolism. They are only required in very small amounts but they are vital for good health. Minerals are small, inorganic ions such as calcium (found in bones), iron (found in red blood cells) and iodine (a component of the hormone thyroxine). Although not really a nutrient, water forms an essential constituent of food. It performs so many functions that life would not be possible without it.

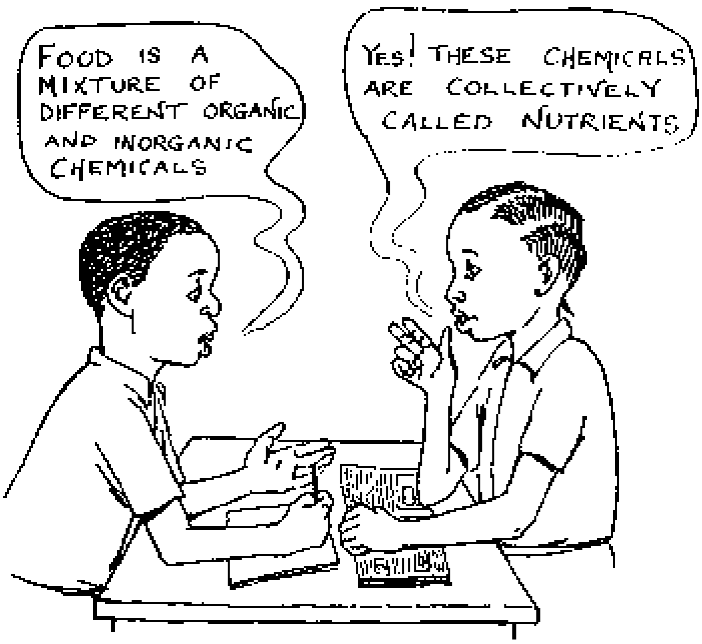

4.1.1 Carbohydrate Collection

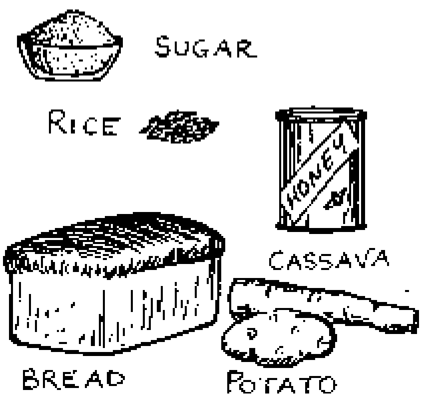

P: Make a collection of food-stuff: containing carbohydrates and display these in a science corner of the classroom. Clearly label all specimens.

4.1.2 Tasting Carbohydrates

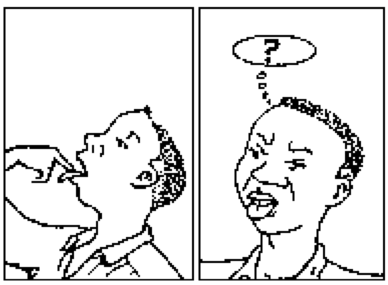

P: Place a little starch on the tongue and note the taste. Next place a little sugar on the tongue and also note its taste.

Q: Describe the taste of starch and sugar

O: Starch is tasteless while sugar tastes sweet.

E: Sugar molecules are small and soluble. They can be detected by the taste buds, to produce a sweet taste. Starch molecules are large and insoluble and cannot be tasted.

4.1.3 Carbohydrate Solubility

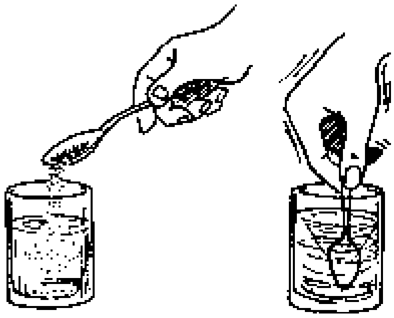

P: Place a teaspoon of sugar in a glass of water and stir. Repeat the experiment using a teaspoon of starch in a glass of water.

Q: What happens to sugar and starch?

O: Sugar dissolves in water while starch does not.

4.1.4 Preparation of Starch from Cassava

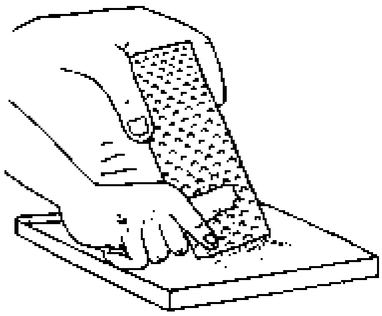

P: Grate the cassava and soak the resulting material in water mixing thoroughly. Strain the liquid from the fibres. Leave the liquid to settle and the starch can be easily seen at the bottom of the container. Decant off the water. Starch could then be dried and stored for future use.

4.1.5 Heating Carbohydrates

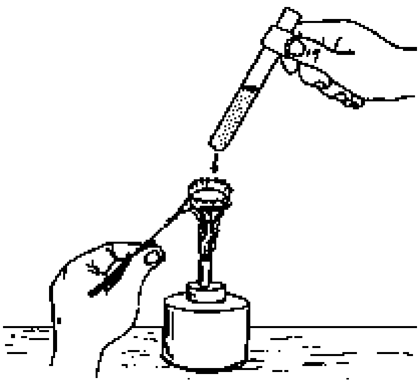

P: Place a small amount of sugar in a bottle cap and heat as shown. Hold a water filled test tube or glass over the vapour from the cap. Repeat the experiment using starch.

Q: What do you observe?

O: Water will condense on the tube and black carbon will remain in the cap.

E: Carbon and water are produced when carbohydrates like sugar and starch break down.

4.1.6 Iodine Test

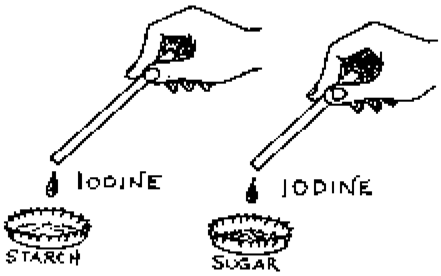

P: Place a small amount of sugar in a bottle cap and a small amount of starch in another. Drop a little iodine into each cap.

O: The starch and iodine produces a blue black colour while there is no colour change with sugar and iodine.

I: Test other foods such as bread, potatoes etc..

4.1.7 Simple Sugars in Plants

P: Plants contain mono and disaccharides. Sucrose (cane sugar or table sugar) is formed from joining together of a fructose molecule and a glucose molecule. Grapes contain glucose. Simple tasting of fruits will confirm the presence of simple sugars by sweetness. Try heating fruits in water to obtain extract.

4.1.8 Simple Sugar Model

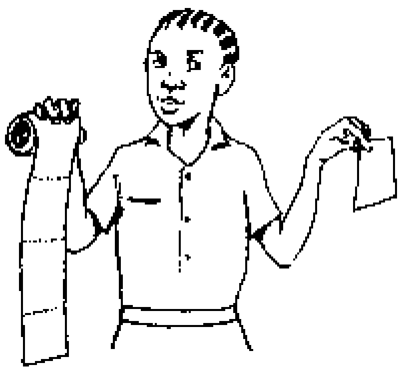

P: To illustrate the long chain structure of polysaccharides use strings of beads, toilet roll or a chain of pupils. Each long chain is formed by smaller units which represent simple sugars.

Can you think of any other simple examples using bottle caps, beans, seeds and stones?

4.1.9 Foods Rich in Fats and Oils

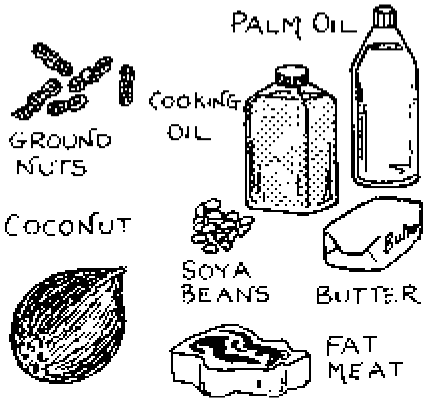

P: Make a collection of foods rich in fats or oils. These could be butter, margarine, animal fat, milk, egg yolk, palm oil, groundnut oil, cod-liver oil and coconut oil

4.1.10 Effect of Fats and Oils on Paper

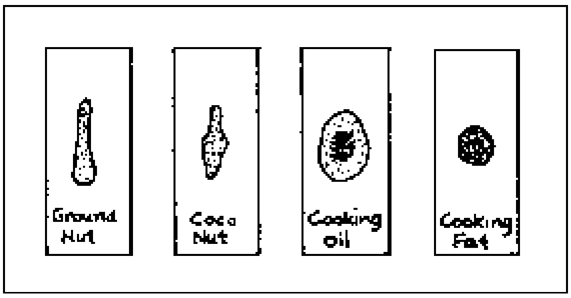

P: Press or rub groundnuts, coconut, cooking oil, milk, butter and cooking fat onto paper.

Q: What happens to the paper?

O: The substances make a grease mark which is transluscent when held up to the light, but looks dark when placed on a desk.

E: The grease marks show the presence of fats and oils in the food items. Simple carbohydrates manufactured by plants can be changed into oils for storage purposes in fruits and seeds.

4.1.11 Orange Peel Oils

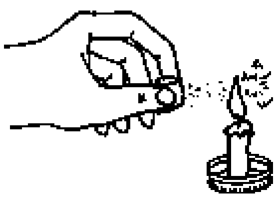

P: Squeeze a fresh orange or orange peel near a flame.

Q: What happens?

O: The spray from the peel burns with bright flashes

E: The peel of oranges contains volatile oils. These do not make a lasting grease spot.

4.1.12 Solubility of Fats and Oils

P: Mix fats or oil with water. Then in a separate container mix fats or oils with a small amount of petrol.

Q: Look through the two liquids is there a difference?

O: Oils and fats dissolve in organic solvents such as petrol or alcohol, but not in water. However, vigorous shaking with water will produce a cloudy or milky emulsion of suspended fat droplets.

4.1.13 Stable and Unstable Emulsions

P: To demonstrate stable and unstable emulsions, add oil to water and shake. In another container add oil and a little soap solution to water and shake.

Q: What is the difference between the two samples?

O: Oil forms a suspension with water which separates later into two layers, while a milky suspension in soap and water persists longer.

E: The soap acts as an emulsifier breaking down the oil into smaller droplets. In human digestion bile acts in a similar way by emulsifying fats and oils.

4.1.14 Dangerous Oils

THIS IS DANGEROUS!

P: Mineral oils are not edible and can be dangerous. Heat carefully small samples of mineral oils.

Q: What do you notice about the smell?

I: *It is dangerous to inhale petrol or mineral oil fumes?*

4.1.15 Hot Oils

P: Hot oils are dangerous. Never add water to hot oil (which boils at 300 degrees C).

Q: Why does adding water make the oil spit?

E: *Water in the oil evaporates so quickly that the vapour causes fat to spit out with it and this may catch fire.*

4.1.16 Protein Collection

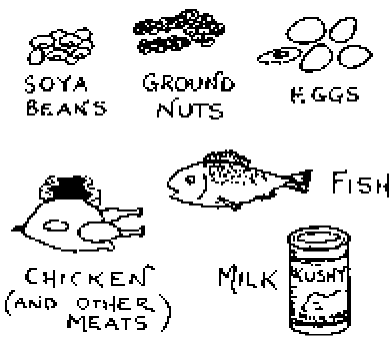

P: All plants contain a certain amount of protein, but some have a high concentration particularly seeds like cow pea, groundnut, soya bean. Collect samples of plant food stuffs and make a display or drawings for the science corner.

4.1.17 Carbon and Water in Protein

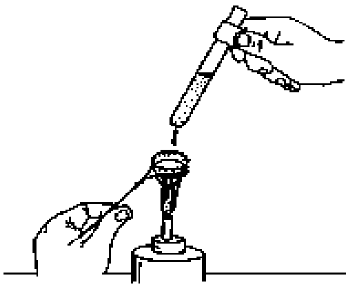

P: Heat pieces of egg-white in a bottle cap. Hold a water filled test-tube over the vapour.

Q: Is carbon present in egg-white? Is water present in egg-white?

O: Water condenses on the test tube. Black carbon deposit will be left in the bottle cap.

E: Protein in egg-white, contains water which evaporates on heating and condenses on the test tube. Carbon remains in the bottle cup.

4.1.18 Protein Contains Other Elements

P: Heat pieces of the white of egg with some limestone (or basic substance).

Q: What do you notice about the smell?

O: A pungent smell is produced.

E: On heating, nitrogen in the egg-white combines with hydrogen to produce ammonia. This has a pungent smell.

4.1.19 Burning Hair and Horn

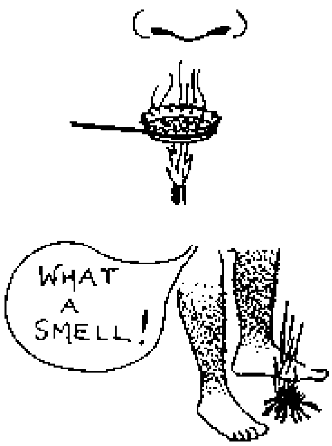

P: Heat some samples of hair and horn over a flame.

O: A pungent smell is produced.

4.1.20 Straightening Hair

P: Some Tanzanian women use a hot comb to straighten their hair.

Q: Why can't we use a cold comb?

E: The protein keratin, which is present in hair, has sulphur bonds between protein chains. Combing the hair with a hot comb can break these bonds temporarily and thus straighten the hair. The bonds soon rejoin and the hair becomes kinky again.

4.1.21 Coagulated Protein

P: Examine an egg before and after cooking. Place a small amount of egg-white in a bottle cap and heat.

Q: The jelly like egg-white turns into a white solid mass.

E: Amino acids and proteins are very sensitive to certain physical changes such as temperature. When heated, protein molecules lose their special properties and become denatured.

4.1.22 Biuret Test for Protein

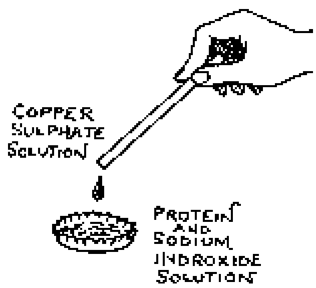

P: Mix a little protein solution with the same amount of 10 per cent sodium hydroxide solution. Add a few drops of 0.5 per cent copper sulphate solution drop by drop, shaking well after each drop.

Q: What colour change do you see?

O: The solution turns purple.

E: Purple colour confirms the presence of protein.

I: Test other foods for protein.

4.1.23 Models of Proteins

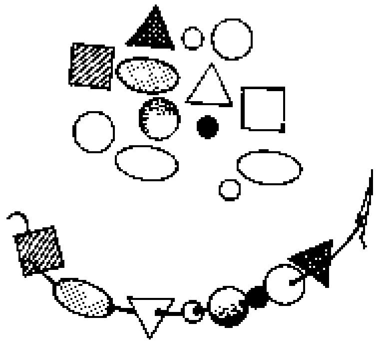

P: Using different types of beads or seeds to represent the different amino acids, string together simple models of protein chains.

Q: How could this also show protein digestion?

E: A pair of scissors could be used to represent an enzyme breaking down protein into amino acids.

4.1.24 Mineral Collection

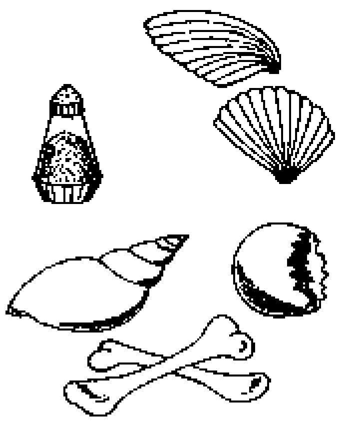

P: Make a collection of sea shells, snail shells, bones, egg shells and other materials from living things rich in mineral salts.

4.1.25 Heating Items rich in Mineral Salts

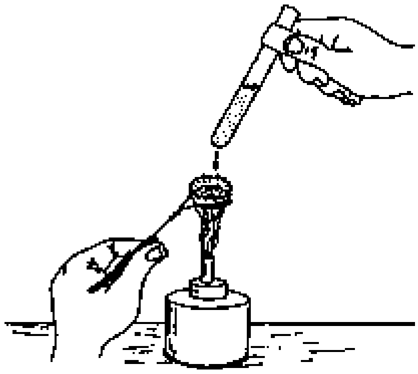

P: Heat some samples of living things rich in mineral salts.

Q: What happens if egg shell is heated?

O: The shell does not burst into flames although burning may occur on the inner surface of the shell where organic membrane is present

E: Calcium present in the egg shell is inorganic and so it does not burn.

4.1.26 Sweat and Tears

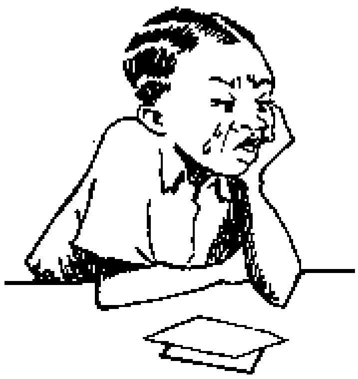

P: Taste your sweat or tears.

Q: What does it taste like?

O: They taste salty.

E: The mineral salts dissolved in these fluids give a distinctive taste.

I: When you have cut yourself what did blood taste of?

4.1.27 Mineral Salts in Wood Ash

P: Mix some ash from plants (wood etc.) with water and heat. Then filter and evaporate off the water.

Q: What is left in the test tube?

O: Salt crystals can be seen

E: Plant materials contain salts which are left in the ash when the organic material burns off.

4.1.28 Foods containing Vitamins

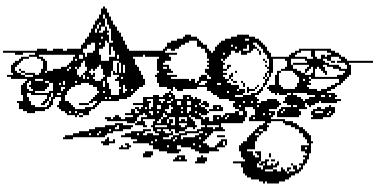

P: Make a collection of foods containing vitamins. These could include eggs, milk, beans and peas, groundnuts and citrus fruits. A vitamin is an organic substance which an animal must obtain in order to be healthy. Vitamins are only needed in small amounts, and part of the need may be synthesized by an animal, although this does not often happen. Different animals require different vitamins. Every vitamin is available from another plant or animal and many can be synthesized in factories.

4.1.29 Baby's Milk

P: Babies fed from a bottle on modified cow's milk need extra vitamin C (e.g. from orange juice) because the vitamin C in milk is destroyed by boiling. All babies need extra vitamin C as they grow (e.g. from cod-liver oil). Proprietary brands of baby milk powders may be harmful if they are mixed unhygienically or in the wrong proportions.

4.1.30 Sunlight Vitamin

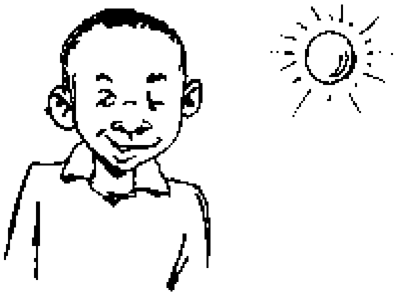

P: Small amounts of Vitamin D can be produced by the body in sunlight. Other sources are milk, eggs and liver. Vitamin D deficiency causes rickets in babies and young children and bone softening in adults. Vitamin D maintains the level of calcium in the blood to form strong bones and teeth.

4.1.31 Vitamin B Group

Q: What happens if our diet is deficient in B group vitamins?

E: Lack of energy is a major symptom of Beri-beri (nerve and muscle wasting) and Pellagra (skin, gut and nerve disorders).

4.1.32 Water as a Solvent

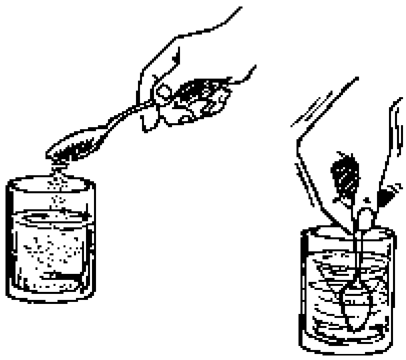

P: Mix a little salt (or sugar) in water.

Q: What happens?

O: The salt dissolves.

E: Mineral Salts and other body nutrients dissolve in water for transport and absorption.

4.1.33 Wilting Plants

P: Look at plants during the dry season or unwatered seedlings after transplanting.

Q: What happens to the plants?

O: The plants and seedlings wilt or droop until supplied with water.

E: Water is essential in maintaining cell turgor and thus plant structure.

4.1.34 Water and Sweat

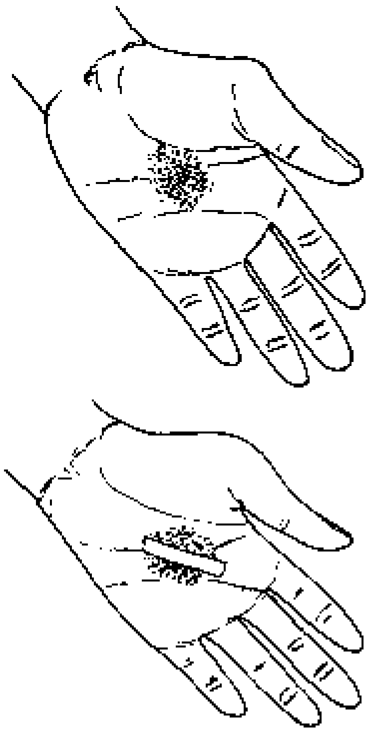

P: Rub iodine solution on to the palm of the hand. Allow this to dry. Place a piece of dry starch paper on to the iodine stained skin. Hold in position for 1-2 minutes. Remove the starch paper and examine it.

Q: What has happened to the starch paper?

O: Dark dots of blue black colour appear on the paper.

E: Dry iodine and dry starch do not react to produce a colour change. Only when water is present does the colour appear.

I: Repeat this experiment after vigorous exercise. Compare the marks with the first test. What can you deduce about and output of sweat by the skin?

4.2. Balanced Diet

Living organisms could be described as machines doing work, the fuel being the food. In addition, like machines, our bodies must first be built up and then have worn out parts replaced. In order to function properly the body needs a balanced diet. A balanced diet should contain adequate amounts of carbohydrates, proteins, fats and oils, mineral salts and vitamins. Although not a nutrient, water is also an essential constituent of food.

4.2.1 Functions of Nutrients

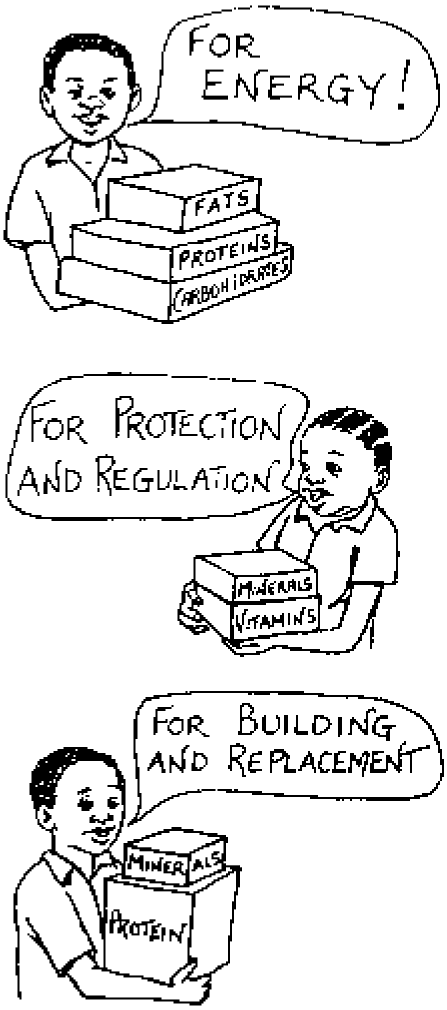

P: Use boxes or containers to represent the five components of food.

Q: Which foods appear under two headings?

E: Proteins and minerals appear under two function headings.

4.2.2 Malnutrition

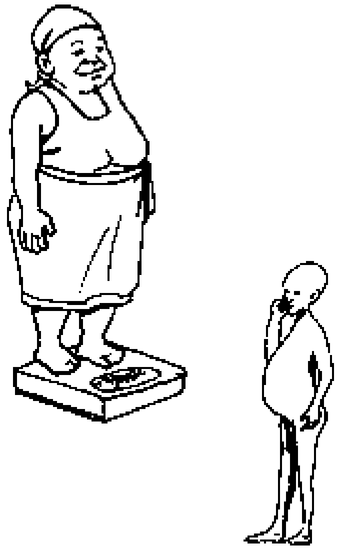

P: Learn how to identify some of the signs of malnutrition (both under and over nutrition)

E: Our food should contain an adequate total amount of nutrients. If it does not, then we suffer from *under nutrition* or perhaps *starvation.* Our diets should contain the correct amount of each nutrient, but if they do not, we suffer from malnutrition. The person who becomes fat because of eating more carbohydrates in the form of sweets and cakes than are needed by the body suffers from malnutrition, that is *over nutrition.*

4.2.3 Reasons For Deficiency Disease

P: Ask the pupils to give reasons why a person may not get a balanced diet

Q: Give three reasons why some people may be malnourished

E: The pupils should be able to state that

a) A shortage of the right kinds of food (such as protein) in certain areas means the normal diet consists of mainly cereals or starchy foods.

b) The low income of some families means that they may be too poor to buy the right kinds of food, such as protein-rich meats, eggs etc..

c) Superstitition and lack of education on concepts of a balanced diet. Local customs can dictate what is eaten and even if suitable foods are available, people may be unwilling to try them. In the past some traditions dictated that pregnant women should not eat eggs even though the protein would help the growing baby's development. Other foods were considered to possess magical properties and to eat them would bring bad luck.

I: Are there any traditional food customs in your area which may affect having a balanced diet?

4.2.4 Daily Energy Needs

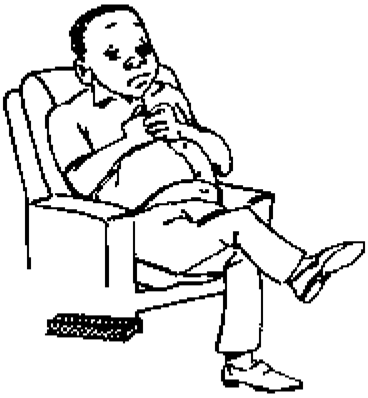

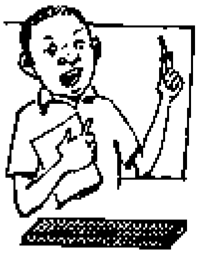

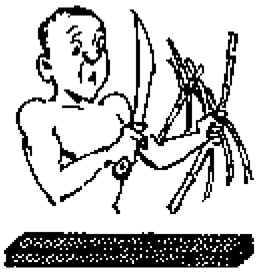

P: Make an illustrated bar chart with paper strips, to show the different energy needs of a sedentary person, a moderately active person and a very active person for an 8 hours working day.

Q: Can you clearly show the different energy needs of different occupations?

E: The very active person needs more energy than a moderately active person who in turn needs more than a sedentary person.

4.3. Digestion in Mammals

Digestion is carried out in the alimentary canal. The alimentary canal is a very long tube which begins at the *mouth* and ends at the *anus.* It has several parts namely buccal cavity, oesohagus, stomach, duodenum, ileum, caecum, appendix, colon and rectum. Each of these parts is modified for specific functions. Associated with the canal are various glands. Food undergoes physical and chemical digestion as it moves along the canal.

4.3.1 Four Types of Teeth

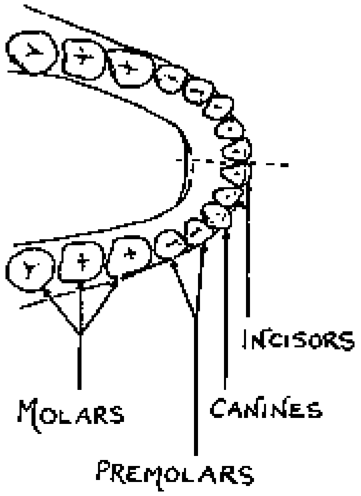

P: Look into a friend's mouth. Examine the teeth and differentiate between them. Count the number of each type present. Try to identify the function of each.

Q: How many are there altogether of each type?

O: There are four types of teeth in the buccal cavity 32 teeth in all.

E: The four different types of teeth perform different functions. The front ones, the incisors, are used for cutting. The canines are used for tearing. The premolars may have one or more points for cutting, or flat surfaces for grinding. Behind the premolars are the molars with flat surfaces for grinding. Molars are not present in young children.

4.3.2 Tooth Models

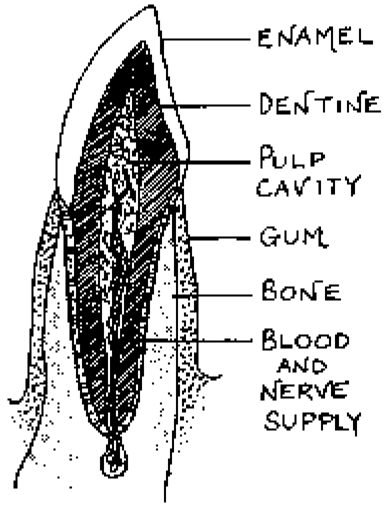

P: Split different types of teeth longitudinally with a sharp knife or tool. Identify the different parts. Using modelling clay or paper mache (soaked paper pieces and paste) make a model using the tooth and text book diagrams as a guide.

Q: Does the tooth cross section exactly match the text book drawing?

O: No. Each tooth is unique.

I: Label your model for display. Try models of different tooth types. Each tooth consists of the *crown,* the *neck* and the *root. A* longitudinal section of the tooth shows the *enamel, dentine* and the *pulp cavity* (which contains nerves and blood vessels). The tooth is cemented to the jaw bone which is covered by the gum.

4.3.3 Dentition in Mammals

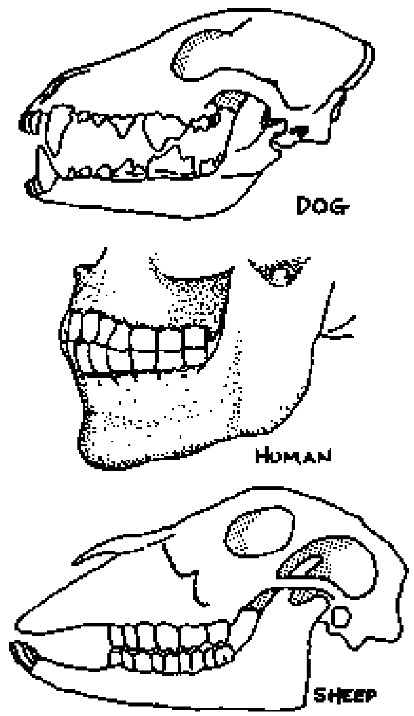

P: Collect examples of dentures and teeth from different animals. Display these to show the dental formulae of omnivores, carnivores and herbivores. Dental formulae of different animal differ with the type of food they eat.

O: Carnivorous mammals are flesh eaters and must be able to kill, tear up and slice the prey, prior to swallowing it. Large fang-like canines and sharp ridges on other teeth act like scissor blades to slice flesh. Herbivorous mammals must be able to crop and grind the tough vegetation. The incisors in the lower jaw are large and chisel shaped. The upper incisors and canines are replaced by a horny pad; the lower incisors and canines act against the pad to crop grass. A gap separates newly cropped grass from that being ground by the premolars and molars.

4.3.4 Human Dentition Model

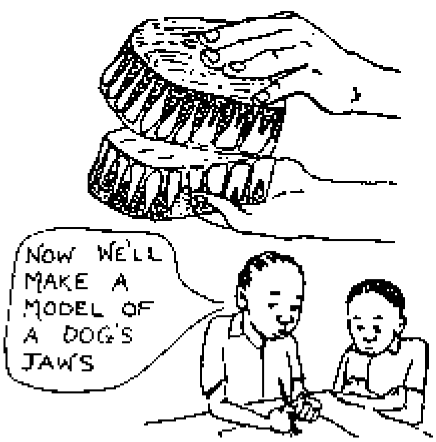

P: Prepare two shaped pieces of wood or cardboard to represent the upper and lower jaw. Make a hinge of rubber on the straight edge between the pieces. Paint, draw or stick a drawing of the teeth around the edge of the wooden shapes.

4.3.5 Dental Formulae Game

MAMMALIAN DENTITION		INCISOR	CANINE	PREMOLAR	MOLAR
CARNIVORE (DOG)	1/2 UPPER JAW	3	1	4	2
	1/2 LOWER JAW	3	1	4	3
OMNIVORE (HUMAN)	1/2 UPPER	2	1	2	3
	1/2 LOWER	2	1	2	3
HERBIVORE (SHEEP)	1/2 UPPER	0	0	3	3
	1/2 LOWER	3	1	3	3

P: Make a table comparing the different dental formulae. Prepare movable cards corresponding to the types of teeth in each dental formula. Mix-up the cards and try to place the correct numbers in the appropriate square. As the numbers are written on movable cards it is easy to correct errors and find the correct solution.

4.3.6 Dental Formulae Cut-Outs

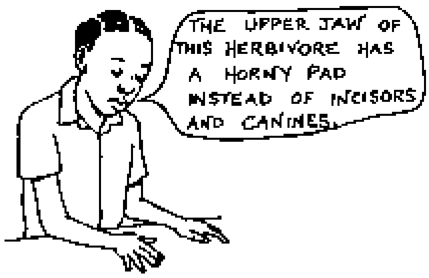

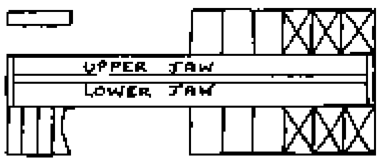

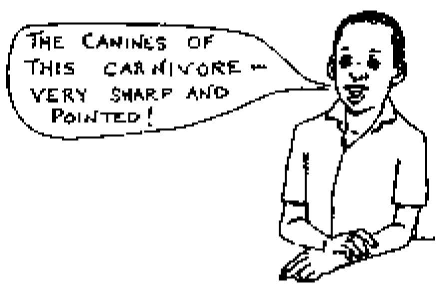

P: Using the illustration in 4.3.3 make large card or paper cut-outs of the teeth shapes of a dog and goat and arrange them along a ruler.

Q: What do you notice?

O: Teeth arrangement in the mouth of a dog and a goat are different.

4.3.7 Functions of Teeth

P: Bite off a small piece of bread and chew it.

Q: In what order are the teeth used?

O: First the front incisors bit off a piece of bread and then the premolars and molars do the chewing.

E: Different teeth have different functions.

I: Try biting off a piece of meat or sugar cane. Are the same teeth involved?

4.3.8 Dental Hygiene

P: Demonstrate the correct way to clean the teeth using a stick or brush.

Q: What errors do some people make when cleaning their teeth?

E: There are many different ways to clean the teeth. A vertical movement of the teeth brush removes food from between teeth and encourages blood flow in the gums.

4.3.9 Tooth Decay

P: Try and obtain a human tooth which has been subject to decay. Boil it in water to sterilise.

Q: How does it differ from a healthy tooth?

O: It may have holes in the enamel, or show signs of bacterial attack in the pulp cavity.

4.3.10 Decaying Tooth

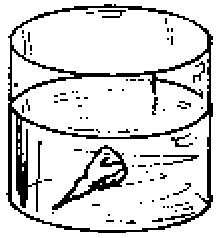

P: Take a mammalian tooth and examine it closely. Then place it in dilute hydrochloric acid for two or three days. Put a similar tooth in an empty container for comparison.

Q: What do you notice about the teeth?

E: The hydrochloric acid has reacted with the tooth enamel digesting part of it.

I: When a person fails to brush their teeth properly, the food that remains on the teeth is acted upon by the bacteria producing acids. These acids eat away the enamel and dentine causing tooth decay.

4.3.11 Nerves in Teeth

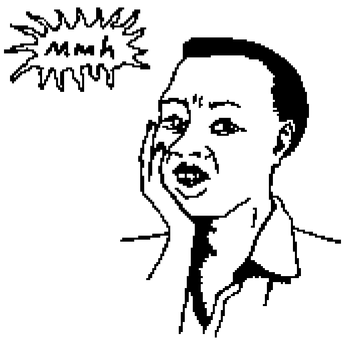

P: Watch someone who has toothache.

Q: What do you observe?

O: They are often in great pain

E: The nerves of the tooth have been attacked making the tooth sensitive.

4.3.12 Licking Lips

P: Try chewing dry biscuits,

Q: How many dry biscuits can you chew *without* licking your lips?

O: It is often hard to prevent the tongue automatically licking the lip's.

E: The tongue is used for ingestion and helps to spread saliva lubricating the lips.

4.3.13 Taste Map

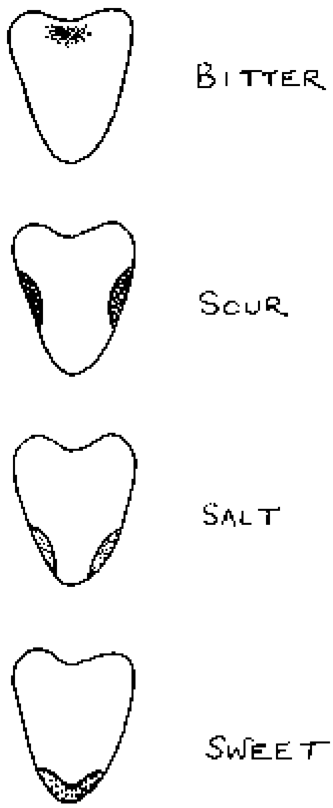

P: Prepare four solutions (sugar/salt/bitter/sour). The bitter solution may contain chloroquine, lemon peel, strong cold tea or coffee. The sour solution may be vinegar or lemon/lime juice. The subject shuts their eyes and holds out their tongue. Using a dropper or matchstick put drops of each solution on different areas of the tongue. The mouth should be rinsed after every test. Each of the four solutions is felt strongly at a specific place on the tongue, where specific taste buds are present. Draw a large map and mark the appropriate strong taste zones.

4.3.14 Tongue and Chewing

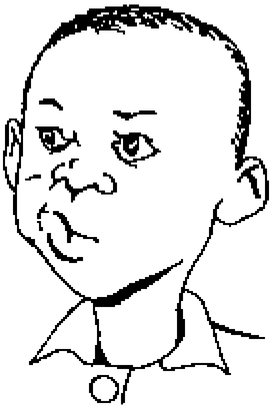

P: Chew some hard seeds or nuts.

Q: What do you notice about the action and position of the tongue?

O: The tongue moves the nuts and pieces of nuts around the mouth to positions where the teeth can break them down.

4.3.15 Multi-purpose Tongue

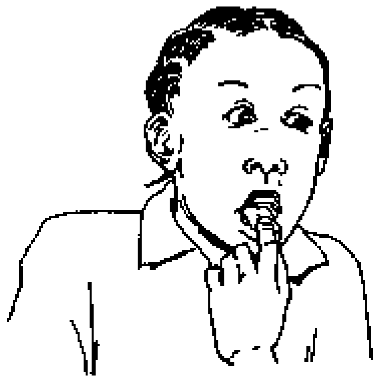

P: Try holding the tip of your tongue and say, "The tongue is used for speaking". Then say each letter of the alphabet and see which sound the same as normal.

Q: Which letters sound different?

E: The tongue moves inside the mouth to form many of our spoken words.

4.3.16 Tongue Rolling

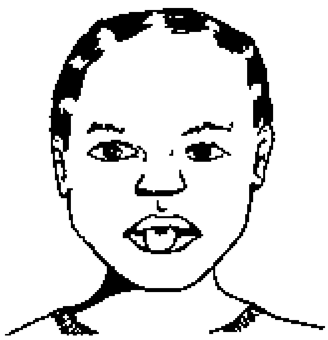

P: Try to roll your tongue as shown in the diagram.

Q: Can everyone in the class roll their tongue?

O: Not everyone will be able to roll the tongue.

E: The ability is inherited. Can your parents, brothers, sisters and relatives roll their tongues?

4.3.17 Production of Saliva

P: Hold up your tongue and look for the ducts of the sub-lingual glands. Squeeze some lemon juice on the tongue.

Q: What do you notice after squeezing lemon juice on the tongue.

O: The lemon juice stimulates the production of saliva.

E: There are three saliva glands in the buccal cavity.

4.3.18 Stimulation of Saliva Production

P: Pass near a place where food is cooking and there is a nice smell.

Q: What happens in your mouth?

O: Saliva is produced.

E: Smell and even the thought of food can stimulate saliva production.

4.3.19 Enzymes in Saliva

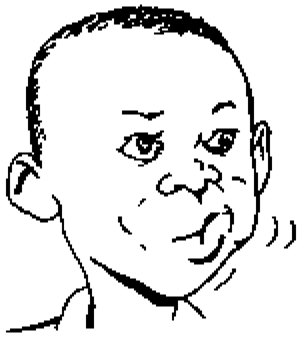

P: Try chewing a piece of dry bread crust *without* swallowing.

Q: What happens to the bread and the taste in your mouth?

O: The bread becomes softer, wetter and sweeter.

E: Saliva breaks down the chains of saccharides (starch) in the bread to form simple saccharides (sugars) which taste sweet.

4.3.20 Action of Salivary Amylase

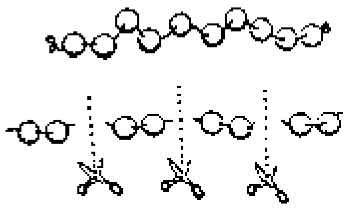

P: The model of starch in 4.1.8 uses a string of beads or seeds to represent simple sugars joined in a long chain. Use scissors to cut up the chain.

Q: What action does cutting with scissors represent?

E: The scissor action represents the action of salivary amylase as it breaks down the long starch chain to simple sugars (maltose).

I: A chain of paper clips or toilet paper could be used as a substitute to a strip of beads.

4.3.21 Invisible Saliva Ink

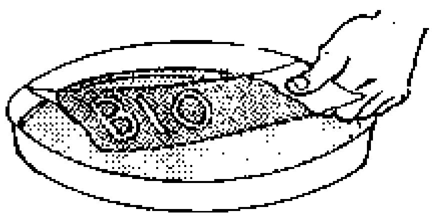

P: Prepare a starch suspension by adding about a teaspoon of maize/cassava flour to half a cup of water. Bring to the boil, then allow to cool and filter (clearer) liquid through a cloth. Soak filter (blotting, news or toilet) paper in the starch suspension and allow to dry. Write your name using saliva on a matchstick. Allow the paper to dry. "Develop" to reveal the hidden writing by dipping in very dilute iodine solution.

E: The saliva digests the starch where it touches the paper.

4.3.22 Salts in Saliva

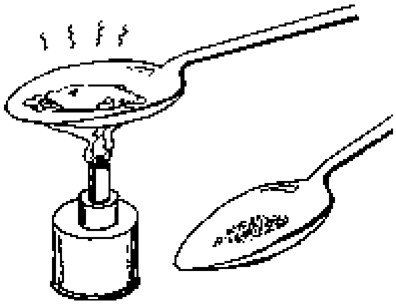

P: Gently heat some saliva on a clean shiny tin or spoon until it is dry.

Q: What do you observe?

O: A white residue is left.

P: Test this residue with a little dilute hydrochloric acid.

O: Bubbles of carbon dioxide are given off.

E: Calcium carbonate is the residue and this reacts with the hydrochloric acid to produce carbon dioxide.

4.3.23 Saliva and Air

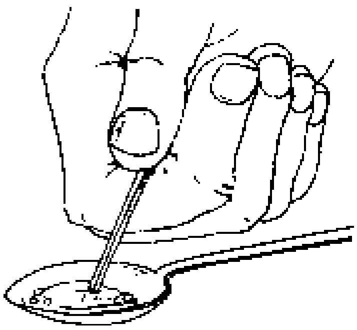

P: Mix some saliva with air on a spoon. Stir gently with a matchstick.

Q: What happens?

O: It goes opaque

E: Hydrogen carbonates (bicarbonates) in the saliva form a precipitate when they come into contact with carbon dioxide in the air.

4.3.24 Saliva as a Lubricant

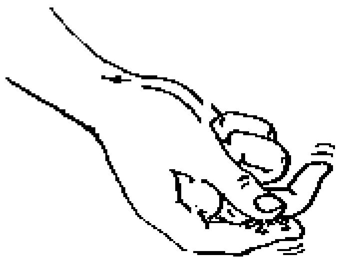

P: Take a sample of saliva and compare it with water for stickness.

Q: How do they compare?

O: Saliva mucus is; slippery

E: Saliva is used to moisten and lubricate food for ease of swallowing.

4.3.25 Touch Reflex

P: Try to touch the soft palate (at the back of the mouth) with your finger.

Q: What happens?

O: The mouth tries to eject the finger as in vomiting.

E: This is a reflex action to remove a foreign body and prevent it entering the oesophagus.

4.3.26 Epiglottis and Palate

P: Use a spoon to press down the tongue and let another student observe the activity of the epiglottis and soft palate during swallowing.

Q: What happens?

O: The epiglottis and soft palate are both open.

E: During swallowing both epiglottis and soft palate close, preventing food entering the trachea and nose.

I: Why is it useful to hold the tongue down while swallowing?

4.3.27 Swallowing Upside Down

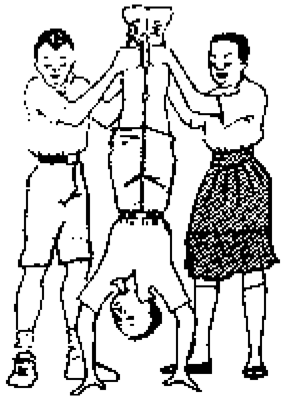

P: Drink a mouth full of water from a cup and swallow it. Then fill your mouth again, (without swallowing) and with the help of two friends do a handstand. Then swallow while upside down.

E: You are able to swallow while upside down, but not as easily. The peristalsis of the oesophagus works against the forces of gravity.

4.3.28 Swallowing with Open Mouth

P: Try to swallow food with an open mouth.

Q: Is it easy?

O: No, liquid may escape from the front

E: The mouth is usually shut and the tongue pressed up when swallowing occurs.

4.3.29 Larynx Movement

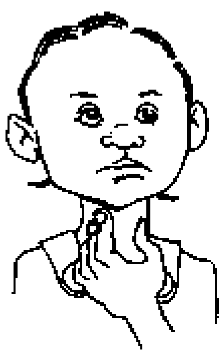

P: Hold your larynx with the fingers of one hand and swallow. Then hold the larynx and breathe in and out

Q: Is there any difference?

E: During swallowing there is more movement around the larynx because of the passing wave action of the muscles.

4.3.30 Food Tube Journey

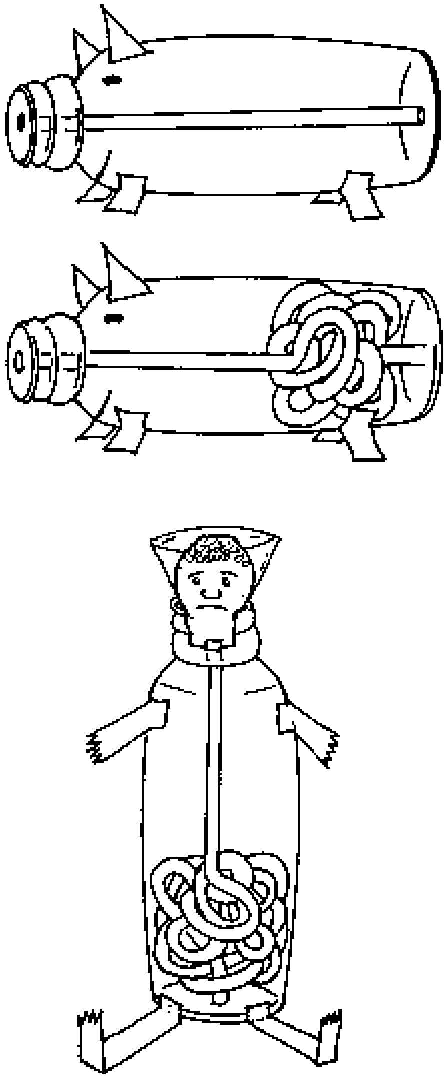

P: Using a bottle and tube construct the model as shown in the diagram. Pour water into the funnel and see how long it takes to pass through the alimentary canal tube.

4.3.31 Peristalsis Model

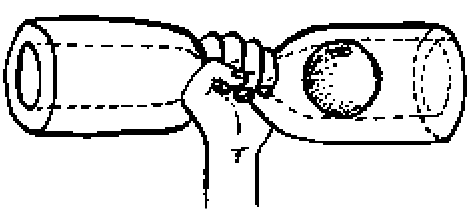

P: Demonstrate peristalsis by pushing a marble or stone down a piece of bicycle inner tubing or a self prepared tube made from plastic bags.

Q: How does this show peristalsis?

O: The tube bulges as the marble moves down its length

E: Circular muscles in the oesophagus wall, (behind the food) contract and relax and so propel the food bolus in a wave like motion to the stomach.

4.3.32 My Stomach is?

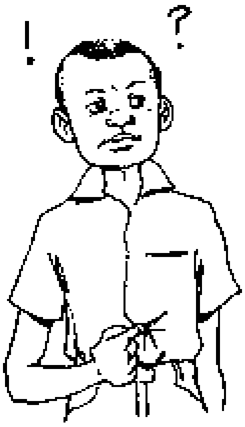

P: Use a finger to point to the approximate position of your stomach and intestines. Move your hands around and point to other organs?

E: By using themselves as a learning aid students can more easily relate the information in the text book to real life.

4.3.33 Indigestion

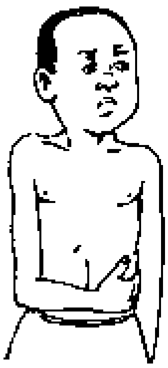

Q: How does it feel to have indigestion?

O: Indigestion can be a pain behind or just below the ribs, or just feeling sick.

E: It may be caused by bacteria from foods not hygienically stored or warmed, too much fat or eating too much.

I: Always cook foods thoroughly, cover from flies and keep stored foods cool

4.3.34 Digestion Question?

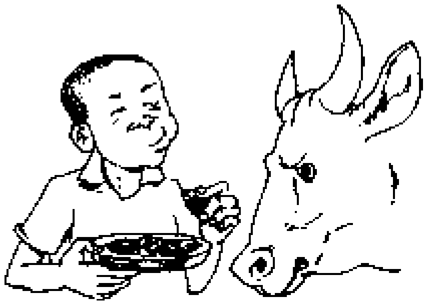

P: Eat a piece of cooked cow's stomach or intestine meat.

Q: I can eat and digest cow's stomach, why don't the acids digest my own?

E: The stomach wall produces mucus - a slimy thin, watery jelly which lines the stomach and protects its walls from it's own digestive juices.

4.3.35 Indigestion Powders

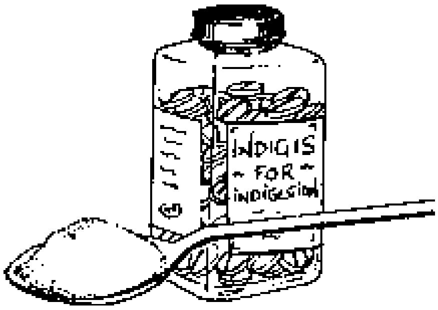

P: A person with acid indigestion will take stomach powder.

Q: How does this help digestion?

O: Sodium bicarbonate (soda) helps ease indigestion problems.

E: Sodium bicarbonate neutralises the acid.

I: Milk or thick soup also help.

4.3.36 Sloshing Stomach

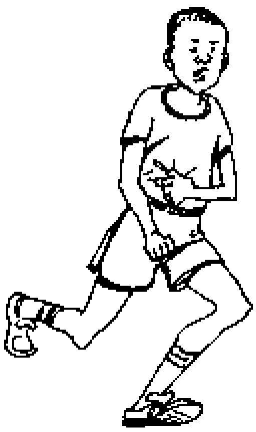

Q: Why do I sometimes hear a sloshing noise from my stomach as I run?

E: This means there is hot gas in your stomach. A burp to release trapped gases helps.

4.3.37 Plastic Stomach Model

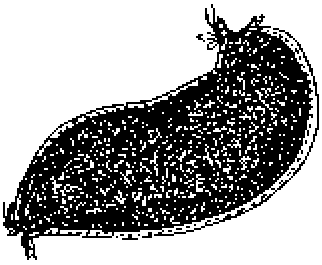

P: Draw the shape of the stomach on a transparent plastic sheet. Cut out four pieces of human stomach shape. Stitch, glue or staple the edges together to make two stomachs. Stuff one stomach model with cotton wool or crumpled up paper.

Q: Observe the size of the two models.

E: The empty model represents an empty stomach and the stuffed model represents a full stomach.

4.3.38 Stomach Volume

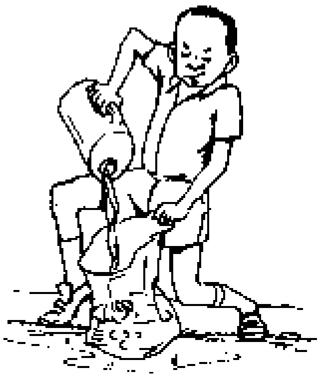

P: Fill a large plastic bag or bucket with 2.5 litres of water. Note the space occupied by the 2.5 litres of water. The human stomach bulges to about this volume to accommodate the water and food. The stomach stores food, mixes it and starts digestion.

4.3.39 Acid Heartburn

Q: What is heartburn?

O: A burning sensation in the oesophagus which is near the heart.

E: Acid in your stomach kills off bacteria in your food and helps digestion of food. The stomach makes mucus (a slimy, thin, watery jelly) which lines and protects the stomach from its own digestive juices. Heartburn is caused as acid splashes up and burns the oesophagus.

4.3.40 Intestine Investigating

P: Ask the pupils to bring parts of the intestine of small animals and investigate the surface which is like soft cloth.

Q: Why is the surface inside the intestine soft?

O: The surface is covered with small villi and microvilli.

E: The small intestine is well adapted for absorption. It has a very large surface area because of its considerable length, its folded walls and its inner surface which consists of numerous finger like projections called *villi.* The surface area is further increased by the epithelial cells (microvilli) covering the villi.

4.3.41 Corrugated Cardboard Villi Model

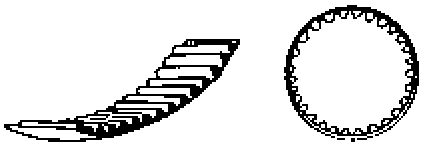

P: Cut a piece of corrugated cardboard approximately 2 cm by 20 cm. Roll it up with the corrugated surface inside.

Q: What is the relationship of the corrugations to the villi?

O: The folds of the corrugated surface correspond to the villi of the ileum. They increase the surface area for absorption of nutrients.

4.3.42 String Villi Model

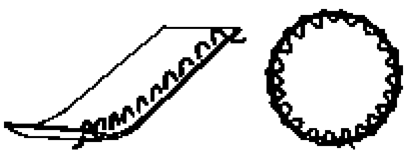

P: Take a strip of cardboard (approx 4 cm x 24 cm). Punch holes through it as shown every 2 cm. Loop some thread through the holes and pull it loosely to form loops on one surface. Roll the cardboard so the loops are inside.

Q: How long is the string forming the loops?

O: The string's length is far longer than the inner circumference of the cardboard. Pull it put and see.

E: This shows how the villi increase surface area for nutrient absorption.

4.3.43 Healthy Eating

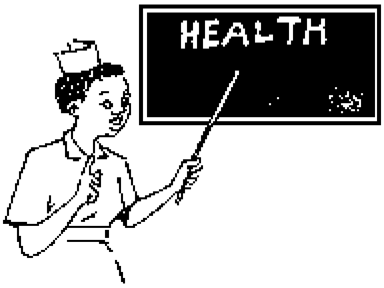

P: Ask a doctor, nurse or health officer to give a talk on medical issues related to the digestive system. Students could make a list of questions which may be given to the doctor before the visit. Medical professionals may bring new insights into your lessons.

4.3.44 Paw Paw Enzymes

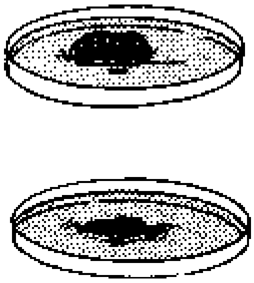

P: Cut two pieces of meat. Place one in a dish with water and another in a dish of paw paw or pineapple juice.

Q: What happens?

O: The meat with juice seems more tender and soft.

E: Enzymes in the paw paw juce denature meat protein and aid digestion.

H: Paw paw is used as a meat tenderiser.

4.3.45 Enzyme Action

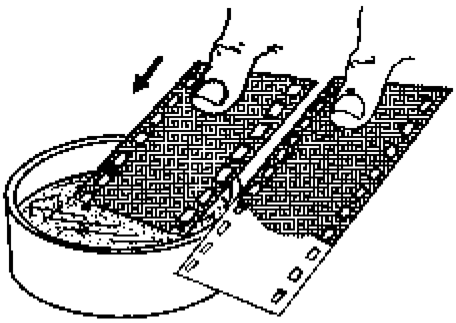

P: Cut two strips of exposed photographic film. Place one in a little water and the other one in the juice of paw paw or pineapple.

O: The film in the juice has lost its coating.

E: The enzymes in the juice digest the gelatin containing the silver salts and the plastic is left clean.

H: Would this affect film storage?

4.3.46 Chewing Cud

P: When a cow eats grass it does not seem to chew before it swallows.

Q: When does a cow chew its food?

O: A cow lies down quietly and chews cud.

E: The cow swallows grass immediately after cutting and then returns it to the mouth by antiperistalsis and grinds it between the back teeth by a side to side movement of the jaw.

H: Sheep and goats also chew cud.

4.3.47 Length of Intestine

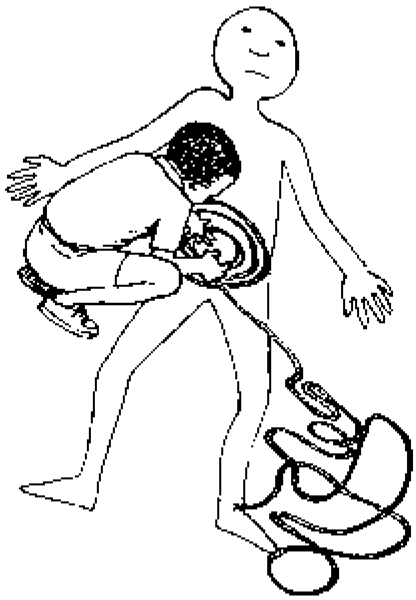

P: Ask pupils to draw on the ground the shapes of different animals. Rabbit, man, cat/dog, pig, cow. Try to draw them life size. Then coil string or strips of paper inside the abdominal cavity area of the animal shape. Here are approximate lengths of intestine: rabbit (1 m) cat/dog (2 - 5 m), pig (24 m), horse (30 m), cow (50 m).

Q: Suggest the reason for the difference in length of the intestine in different animals.

O: Observers may be suprised at the length of some animal intestines.

E: Length of intestine corresponds to the type of diet an animal eats. Herbivores have longer intestines than carnivores while that of omnivores is intermediate in length.

4.3.48 Digestion Game

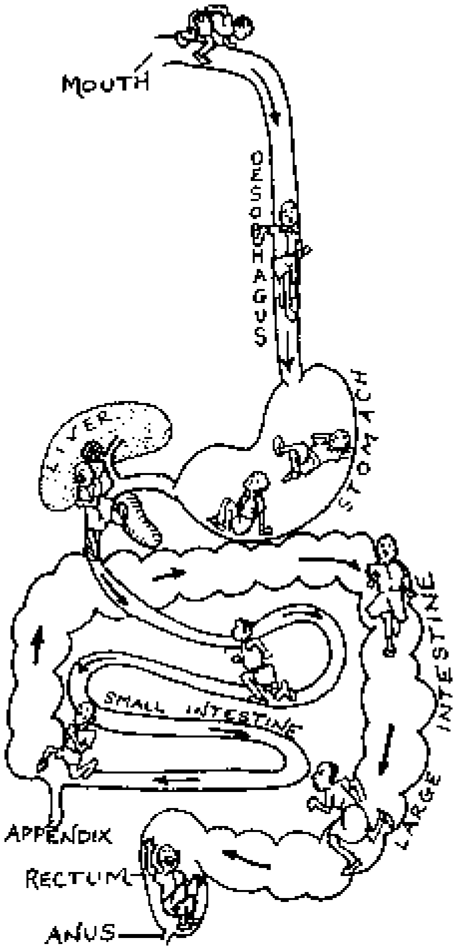

P: Draw a large outline of the digestive system on the classroom floor or mark it out on the playing field, with string and pegs or use stones. Ask the pupil to walk through the outline and describe what happens at the various places. Labels may be added before or during the activity.

4.4. Plant Nutrition

Plants obtain their food by making their own. This type of feeding is known as *autotrophic nutrition.* The process by which plants do this requires water, carbon dioxide, light and a green substance found in plants called chlorophyll. This process is called *photosynthesis.* The first substances manufactured by photosynthesis are simple sugars. These can be converted to starch, cellulose, fats, proteins or any other organic compound needed by the plant. For some of these compounds, additional elements are required, which are obtained as mineral salts from the soil. As well as providing essential compounds for the plant, photosynthessis converts the energy. This can then be used directly by plants themselves, or indirectly by all other living organisms.

4.4.1 Photosynthesis is a Chemical Process

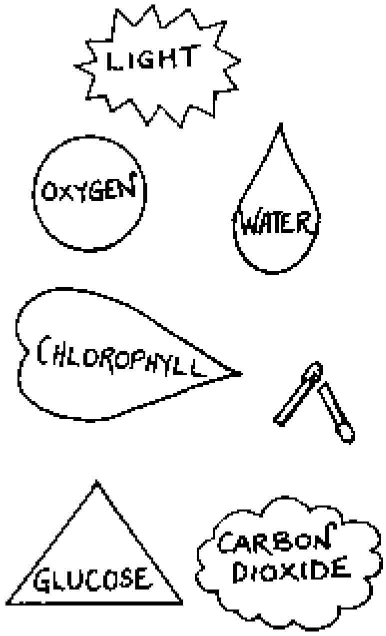

P: Draw and cut out the symbols shown above. Then arrange them in the correct order to show the chemical equation for photosynthesis. Use matchsticks for arrows and + symbols.

I: Repeat the above procedure but replace the words in the shapes with the chemical formulae of the substances involved. These may be written on the reverse side of the first set of cards.

4.4.2 Do Plants Need Light?

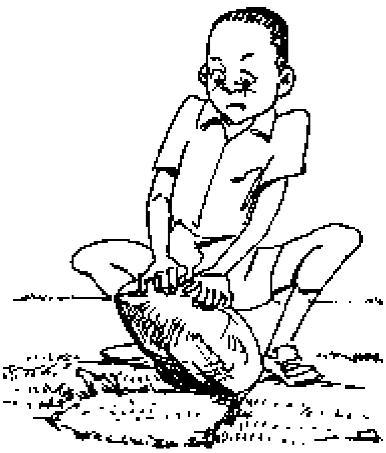

P: Cover an area of grass with a large flat brick or stone or with a black plastic bag so that no light reaches the plants. Examine the grass after a few days. An alternative is to place a black plastic bag over green leaves at the end of a branch and seal it by using string, tape or wire.

Q: What changes take place in the appearance of the leaves?

O: The plants and leaves become pale green or yellow in colour and die eventually.

E: Plants need light for photosynthesis. When they lose their green chlorophyll no more light can be absorbed and they die.

4.4.3 Photosynthesis Produces a Gas

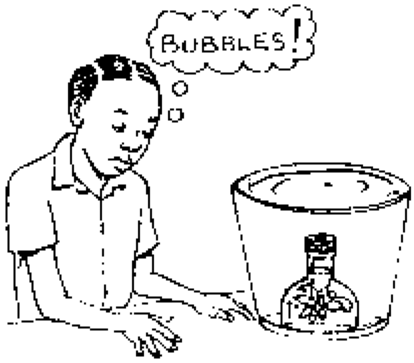

P: Cut the neck from a plastic bottle, leaving the screw cap in place. Place in a large container of water making sure the bottle is completely filled with water. Place some aquatic plants under the bottle and leave for a few days in sunlight.

O: The water level goes down. Oxygen produced by photosynthesis forms as bubbles on the leaves, which rise and collect in the bottle neck.

4.4.4 Chrorophyll Extract

P: Pick about 5, large soft green leaves. Cut these into small pieces and grind with a stone. Add a little water to the pulp and pour the mixture into a glass jar or test tune. Leave to settle.

Q: What do you observe?

O: The solid material settles out, leaving a green solution.

E: The green substance in the water is chlorophyll, which has been released from the cells by mechanical breaking of the cell membranes by grinding.

I: The extraction of chlorophyll works better in alcohol or spirit.

4.4.5 Leaf Pigments

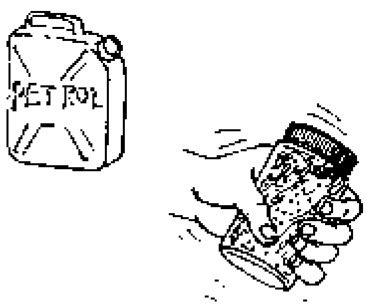

P: Take some chlorophyll extract (see 4.5.4) and mix it with an equal volume of colourless petrol. Shake well.

Q: What do you notice about the colour of the liquid?

O: Some colour from the extract dissolves in petrol leaving it yellow

E: The green colour of leaves is a mixture of several pigments including chlorophyll (green) and xanthophyll (yellow). The yellow colour is more soluble in petrol than in water.

4.4.6 Chromatography

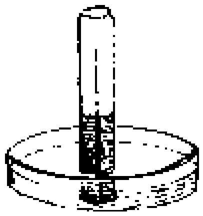

P: Place a few cm 3 of chlorophyll extract (see 4.5.4) in a shallow container. Stand a stick of dry blackboard chalk upright in the extract.

O: The extract rises up the chalk and two colour bands (one yellow and one green) can be seen.

E: By capillary rise leaf pigments are transported with different velocity and thus the green chlorophyll can be separated from the yellow xanthophyll: This process is called chromatography.

4.4.7 Plants make Starch during Photosynthesis

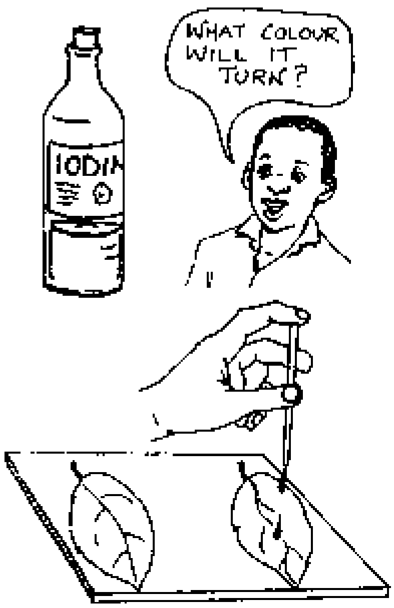

P: Take two plants grown in pots and place one in sunlight and the other in a dark cupboard for 2 days. Pick a leaf from each, but keep them separate. Heat each leaf in some surgical spirit for about 5 minutes to remove some of the green colour. Take each leaf out and lay it on a flat surface. Add a few drops of iodine solution.

Q: What is the result?

O: The leaf from the plant grown in the light became a blue-black colour, whereas the one from the dark was the pale brown colour of iodine.

E: When a leaf is exposed to light, photosynthesis occurs producing sugar, which is then converted to starch for storage. This gives the blue/black colour with iodine. In the dark, no photosynthesis can take place, so no starch is produced.

I: *Never heat spirit directly with a flame or it will catch fire. Place the spirit container in another one filled with water and heat the water container.*

4.4.8 Nutrients from Soil

P: Fill one container (i.e. 250g Tan Bond tin) with pieces of card board or foam packing cut into very small pieces. Fill another container with fertile soil and plant a few seeds (peas, beans or maize) in each one. Water each container with distilled water (prepared by condensing steam from a kettle) or rain water collected in clean jars. Use this water to keep the containers damp throughout the experiments. Examine daily.

Q: What differences do you see in the seedlings in the two containers?

O: Seedlings grown in the container without soil are smaller and less healthy with yellow leaves.

E: As well as water, carbon dioxide and sunlight plants require mineral salts in order to grow and remain healthy. The seedlings grown without soil get only water and so are lacking these salts.

5. Transportation of Materials in Organisms

5.1. Basic Principles of Transportation

Transport is the movement, circulation or flow of substances within living organisms. This can either be with or without a system of tubes (vascular system). The blood circulatory system in animals, and the xylem and phloem in plants are examples of transport systems.

In an individual cell, substances generally move into and out by *diffusion, osmosis* or *active transport.* Diffusion is the free movement of molecules of a substance from regions of high concentration to regions of lower concentration. Osmosis is the diffusion of water molecules through a semi-permeable membrane from a weak solution to a strong solution. Active transport is an energy consuming process, which moves substances through a membrane from a region of low concentration to a region of higher concentration (i.e. the opposite direction to diffusion).

5.1.1 Diffusion in Liquids

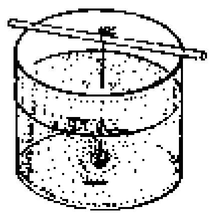

P: Carefully, put a crystal of potassium permanganate at the bottom of a jar containing water. Leave undisturbed and observe at 20 minute intervals. Alternatively, knot a piece of string four or five times to make a compact ball. Wax or grease the string above the knot and soak the knot in iodine solution. Hang it in a jar of water and observe at intervals. Starch solution could be used instead of water in the case of the iodine experiment, thus producing a blue-black colour as a result of diffusion.

Q: What happens to the colour of the water or the starch solution?

O: In both cases the colour of potassium permanganate and iodine spread slowly throughout the solutions.

E: Molecules of potassium permanganate or iodine move from where they are more concentrated to the where they are not found at all, until the concentration in both areas is the same. This is diffusion.

5.1.2 Simple Diffusion Model

P: Arrange two or three different types of seeds or beads in layers in a container. Cover and shake thoroughly.

Q: What do you observe about the distribution of seeds or beads?

O: They are all mixed together.

E: Since they are free to move, the seeds or beads become evenly distributed. This is similar to the process of diffusion.

5.1.3 Diffusion in Daily Life

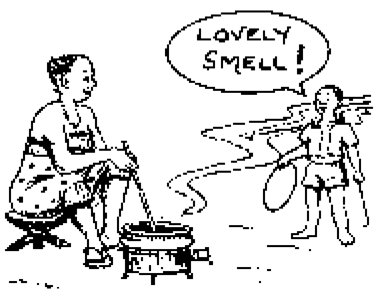

P: Pass near a place where meat is being roasted or food is being cooked.

Q: What do you sense?

O: The smell of cooking food

E: The smell from the food can be sensed even at a distance, because the particles producing the smell spread out into the air by diffusion normally by the joint effect of diffusion and wind.

5.1.4 Diffusion and Pollution

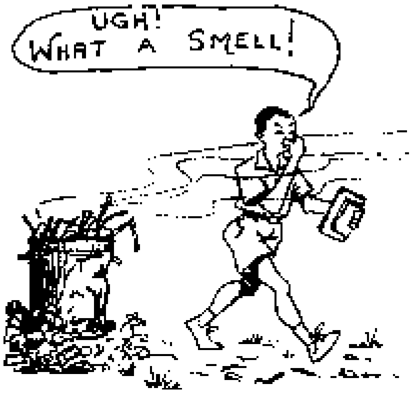

P: Pass near a polluted area (e.g. burning heap of litter, filling station, latrine)

Q: What do you smell?

O: The smell in each case is often unpleasant.

E: See 5.1.3

5.1.5 Osmosis and Active Transport Model

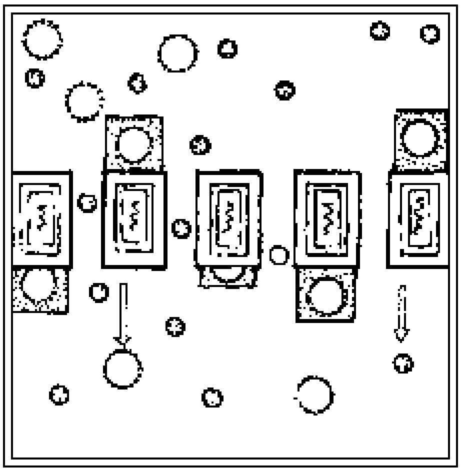

P: Construct the above model using a small cardboard or plastic tray and some matchboxes. The gaps between the boxes should allow small objects to pass (i.e. peas) but prevent movement of larger ones (soda bottle caps). Place ten soda bottle caps and ten peas in one side of the tray and twenty peas in the other side. Shake the tray gently ten times. Count the peas in each side. The matchboxes and the space between them represent a selectively permeable membrane; the peas represent water molecules and the soda caps represent large solute molecules such as glucose. The water molecules can move freely, whereas the glucose molecules cannot. This represents *osmosis.* The process of *active transport* can be demonstrated by placing a soda cap in a matchbox tray and pushing it through the matchbox "membrane". Thus it illustrates that active transport requires energy and is selective for certain substances, since only bodies which fit in the matchbox tray can be carried across.

5.1.6 Osmosis in Plant Cells

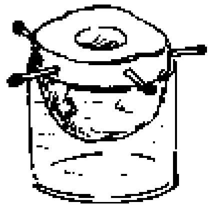

P: Cut a piece of potato or a piece of carrot. Make a shallow hole in the cut surface, and support the potato in a cup or jar. Place a small amount of sugar or salt in the hole. Leave for 3 or 4 hours.

Q: What happens to the sugar or salt in the hole?

O: Water gradually collects in the hole and sugar or salt dissolves.

E: Water is drawn out of the plant cells by osmosis and into the hole. This is because the solution in the cells (the cytoplasm) is weaker than the sugar or salt solution in the hole.

5.1.7 Osmosis and Turgidity

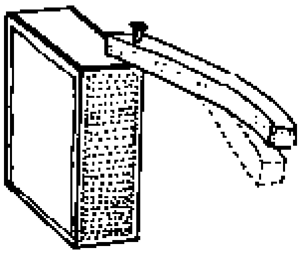

P: Cut some strips of irish or sweet potato about 50 mm long and 5 mm square. Place some in a strong sugar solution (2 or 3 spoonfuls of sugar in half a cup of water) and some in plain water.

Q: What is the difference between the strips?

O: The strip from the sugar solution has lost water by osmosis and so is soft (flaccid). The one in water has not lost water and so remains rigid (turgid).

5.1.8 Changing the Size of an Egg

P: Take two eggs and place them in dilute hydrochloric acid until their shells dissolve (about 12 hours). Find the volume of each egg by submerging in a container of water. Place one egg in distilled water and the other in strong salt solution. After several days remove the eggs and find their respective volumes.

Q: What can you say about the volumes of the eggs at the end of the experiment.

O: The egg in distilled water increases in volume whereas the egg in salt solution decreases in volume.

E: The concentration of the liquid inside the egg is higher than water so water moves in by osmosis. However when placed in salt solution the external solution is now stronger so water moves out of the egg by osmosis.

5.1.9 Bursting Osmosis Box

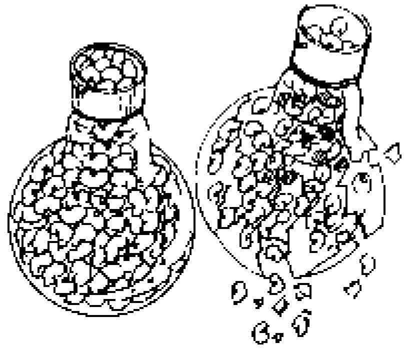

P: Tightly pack a matchbox with dried beans or seeds. Place in a container of water and leave overnight

Q: What do you observe?

O: The seeds swell and burst the box open.

E: Dormant seeds have a low water content. When they start to germinate they take in water by osmosis and increase in size. The forces involved are enough to burst the box.

I: The swelling seeds will even break the glass of a fused bulb.

5.2. Blood and Blood Groups

Blood is a fluid tissue of animals consisting of several different types of cell suspended in a fluid called plasma. The cells include red blood cells, white blood cells and platelets. Blood transports substances from one part of the body to another, helps defend the body against disease and keeps conditions right for the working of our cells.

5.2.1 Red Blood Cell Models

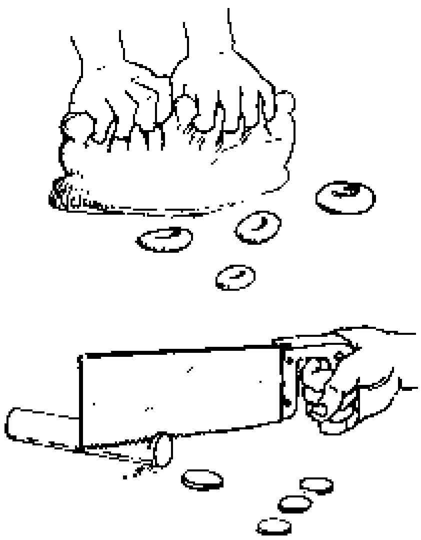

P: (a) Use a modelling material like clay or plastercine to shape red blood cells.

(b) Cut slices of wood from a round straight stick. Use a knife to carve out the concave areas. Paint if necessary.

(c) Cut out circles of thick card board and shade to show concave area.

E: Red blood cells are biconcave discs approximately circular and 7.2 micrometre in diameter. They have no nucleus.

H: Platelet models can be made by cutting red cell models into pieces.

5.2.2 White Blood Cell Models

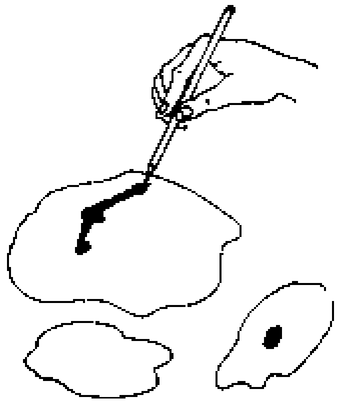

P: (a) Fill a plastic bag with a little water and add a stone or seed to represent the nucleus of the white cell.

(b) Cut the white blood cell from a thin sheet of sponge rubber. Draw on a nucleus.

(c) Cut the shape of the white cell from cardboard or plastic sheet and draw on a nucleus.

Q: Compare these blood cells with red blood cells.

O: White blood cells have no fixed shape are transluscent and are much larger than red blood cells.

E: Their large size helps them to secrete a lot of antibodies and to engulf bacteria or foreign bodies.

5.2.3 How much Blood?

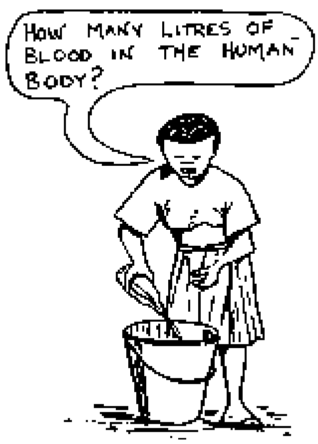

P: Take a bucket full of water and an empty bucket.

Q: Let the student estimate how many litres would represent the amount of blood in the human body?

O: You would need about 5 litres.

5.2.4 Simple Centrifuge

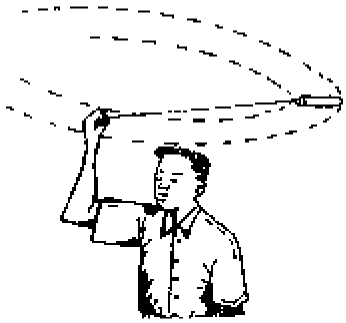

P: Attach a short string to a test tube neck. Half fill the tube with animal blood and seal securely. Spin the tube very quickly around your head. Shorten the string to make the tube circle faster.

E: The red blood cells being heavier than plasma are pushed to the bottom by centrifugal force.

I: *For safety reasons make sure that both seal and string are attached securely and noone will be hurt.*

5.2.5 Red Blood Cell Factory

P: Saw or crack open a fresh bone.

Q: What do you notice about the colour?

O: The ends of the bones may look bright red.

E: Red blood cells are' made in the red bone marrow of short bones such as the sternum and vertebrae.

5.2.6 Blood and Football

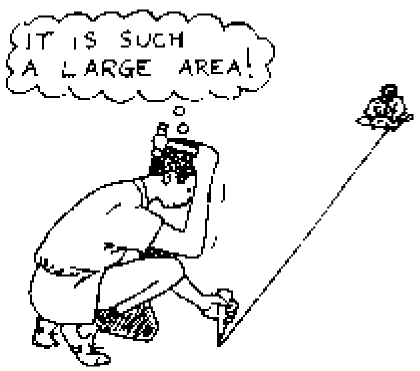

P: Measure out an area 50 metres by 25 metres on the football field or school compound.

Q: What has this to do with blood?

E: This is the area that could be covered if the body's red blood cells were placed side by side one cell deep! (A quarter of the area of a full size pitch).

5.2.7 Around the World

P: Imagine if all the red blood cells in your body were placed side by side in a line.

Q: How far would the line stretch?

O: The line of red blood cells would stretch over four times round the world.

E: Over 20 billion red cells are present in the blood of an teenage human.

5.2.8 Anaemia

P: Pull down your lower eyelid to expose the surface next to the eyeball. Using a mirror observe its colour. If there is no mirror let your neighbour check the colour.

O: The lower side of the eyelid may be pale or red coloured.

E: The paleness indicates that a person is anaemic and they do not have enough red blood cells. The oxygen carrying capacity is reduced causing tiredness. The most common kind of anaemia happens when women and girls lose blood during menstruation and do not eat enough iron-containing foods.

5.2.9 Engulfing Model

P: Use a white handkerchief to represent a white blood cell and a seed or fruit as an invading foreign body. Shape the handkerchief so that it has two arms representing pseudopoda and then bring those arms around the seed or fruit. White blood cells swarm to a site of infection and devour bacteria by engulfing (phagocytosis).

5.2.10 Blood Loss

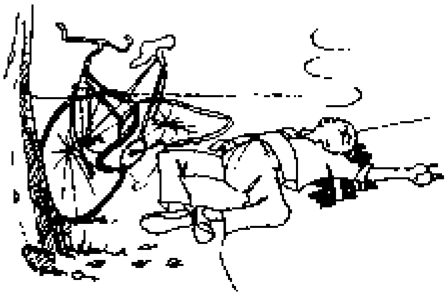

P: In an accident a person may lose blood.

Q: What happens if we lose a lot of blood?

O: We lose consciousness.

E: Death may occur because blood pressure falls, and this slows down the flow of blood around the body. The number of red blood cells falls, so the oxygen-carrying ability of the blood is reduced.

5.2.11 Blood Clotting

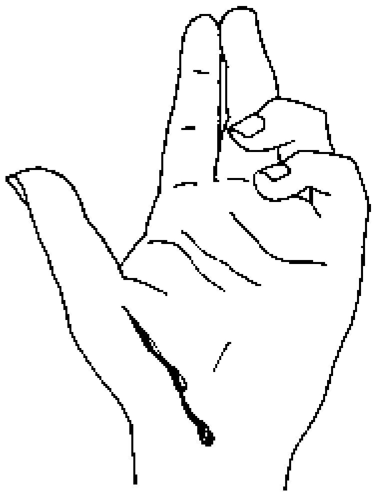

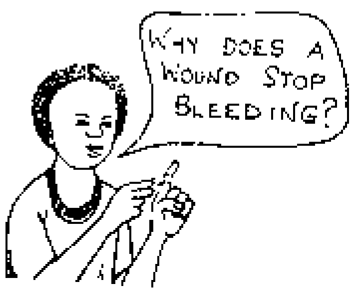

P: When you cut yourself the wound will bleed for a few minutes and then begin to clot.

Q: Why does it stop bleeding?

E: Blood clotting is brought about by a series of reactions. *Platelets* release a substance that converts *prothrombin* to *thrombin. Thrombin* converts *fibrinogen* in plasma into *fibrin* a mesh or network of fine threads. Blood corpuscles are entangled in the network that covers the wound. The resulting clot blocks the wound, prevents bleeding and stops germs entering the body, while white blood cells in the network attack bacteria already present.

5.2.12 Blood Clot Model

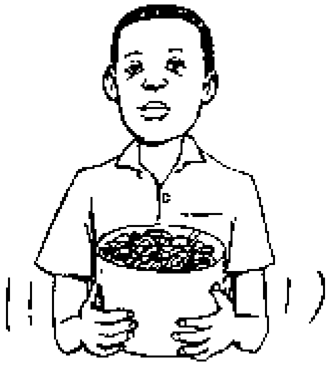

P: Place some red and white beans in a container to represent red and white blood cells. Move them around by gently shaking. Mix thin strips of grass or paper with the beans and repeat the shaking action. The beans are packed more securely by the strips. The strips represent the fibrin network (see 5.2.11)

5.2.13 The Healing Battle

P: Examine a wound a few hours after it occurred.

Q: What do you notice?

O: The area of the wound has swollen in size, it looks red and causes pain.

E: The body is mending and defending itself against the invasion of foreign germs. Heat is produced during these activities and swelling helps to immobilise the wounded area. Pain warns the brain to take care of the wound.

5.2.14 After the Battle

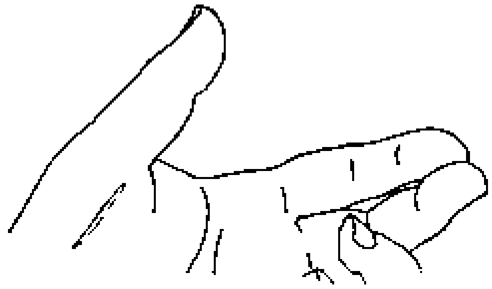

P: A few weeks after cutting your hand or knee the scab (network of fibrin and cells) comes away

Q: What does the wound look like now?

O: The skin of the wound looks healed but a little tender. There may be some clear fluid behind the scab.

E: The skin under a scab may not have a protective layer of dead cells on it. The fluid is plasma serum.

I: If the scab comes off too early the new skin will pull away and bleeding will result.

5.2.15 Slowing Blood Clotting

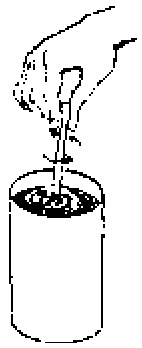

P: Animal blood tends to start clotting soon after leaving the animal. Stir the blood with a rod or stick for 4-5 minutes.

Q: Why do these actions stop Hood clotting?

E: Fibrin collects around the stick

I: Chemicals such as sodium oblate or sodium citrate or heparin also prevent blood clotting.

5.2.16 Finger Nail Indicator

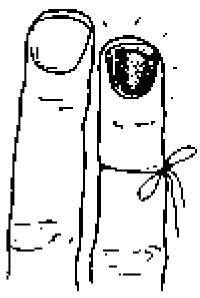

P: Tie a cord or band around your thumb or finger. Examine the nail colour.

Wait for a minute.

Q: Has the nail colour changed?

O: Yes, It has gone a blue-red colour.

E: The oxygen in the end of the finger is gradually being used up giving the blood a blue tint.

I: *Do not leave the cord on your finger too long*!

5.2.17 Haemoglobin's Favourite

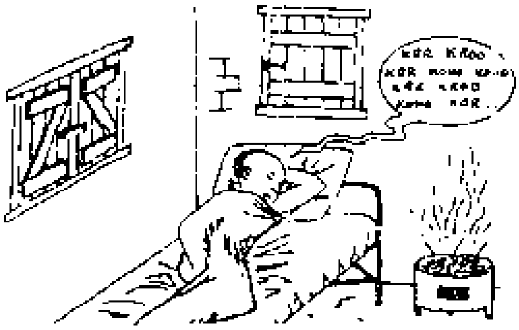

P: Sleeping in a room with a charcoal stove on while the windows are closed may lead to carbon monoxide poisoning.

E: Carbon monoxide is the odourless, colourless, killer component of combustion. Often it is produced when a fuel burning appliance does not work efficiently. Haemoglobin has an even greater liking for carbon monoxide than for oxygen. It combines 300 times more readily than with oxygen. If we breathe it in, less oxygen can combine with the blood, so the tissues are starved of oxygen. Small amounts of CO are found in cigarette smoke.

5.2.18 Immunity

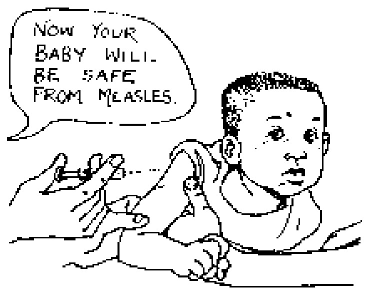

P: Inoculation into the body of a vaccine (which may consist of an old strain of the disease; or the dead organisms or live micro-organism) gives immunity.

Q: What is immunity?

E: The inoculation causes the build up of antibodies which may remain in the body for several years. These antibodies are ready to fight infection by the microorganism at any time.

5.2.19 Antibody and Antigen Reaction

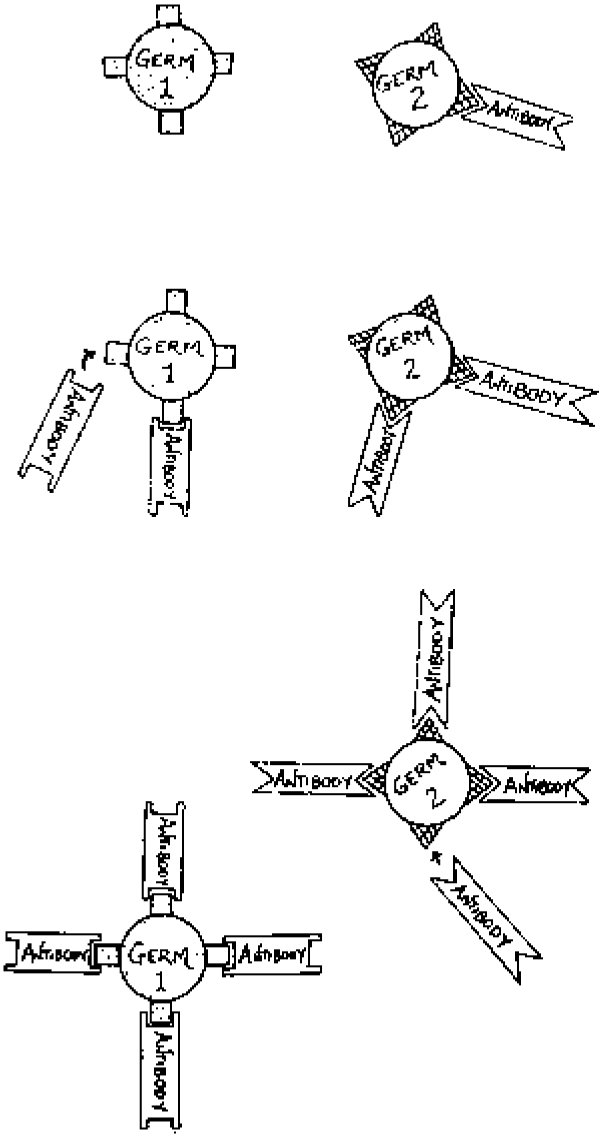

P: Prepare circles of card with different shapes on their edges as shown in the diagram. The circles represent the *germ* and the edge shapes their *antigens.* Now cut strips of card and alter one end of each so it matches the edge shapes of the "germ circles".

Q: How would you use these?

E: The strips of card represent the antibodies produced by the body to combat the antigens of the germs. The antibodes will be able to act on a specific antigen.

5.2.20 Transfusion Card Game

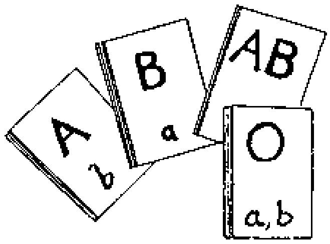

P: Cut out twenty rectangles of card and label five cards for each blood group as shown above. The game is played in the following way: The dealer shuffles the cards and places the pile face down on the table. One card is turned face upwards on the table between two or more players. This card denotes the *patient's* blood group. The next card turned over denotes the *donor's* blood group. Every time a transfusion is possible, the players must call out 'safe'. When the transfusion would be dangerous they call out 'clot'. The first to shout the correct term wins the cards and adds them to their pile. At the end of the game the player with the most cards wins.

5.2.21 Transfusion Checkers

BLOOD GROUP		DONOR A ANTI-B	DONOR B ANTI-A	DONOR AB –	DONOR O ANTI-A ANTI-B
PATIENT	A ANTI-B				
	B ANTI-A				
	AB –				
	O ANTI-A ANTI-B				

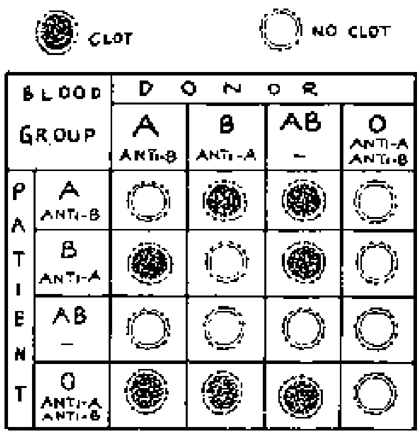

P: Draw out a grid as shown in the diagram. Prepare two types of bottle tops: one type to represent a clot and the other to represent a safe transfusion.

Q: Can you place the tops on the right square to show which blood groups are compatible? Which ones aren't?

E: The main red blood cells contain antigens, classified as blood groups A, B or AB. Blood group O cells do not have antigens. Antibodies in plasma clump blood cells together.

5.3. Blood Circulation

Blood circulation is the continuous flow of blood round the body initiated by the pumping action of the heart. As the heart pumps blood, pulsations can be felt at some points in the body such as wrists and temples. From the heart, blood moves through thick-walled vessels called *arteries,* into very small thin-walled *capillaries* and back through veins. Some animals, such as mammals have a double circulation where blood goes through the heart twice before completing the cycle. As blood moves it carries useful substances such as oxygen from the lungs and food from the intestines to the body tissues. It also removes waste substances like carbon dioxide from the body tissues. Blood is prevented from flowing back by structures called *valves.*

5.3.1 Newspaper Stethoscope

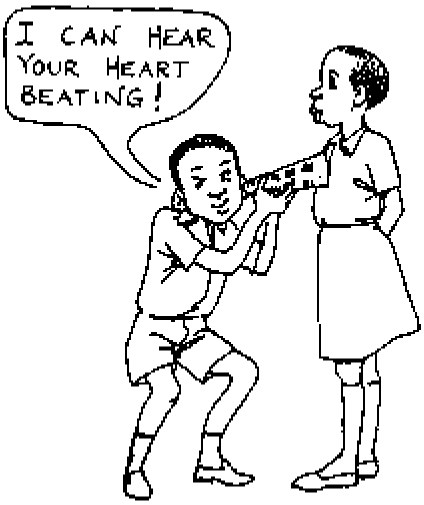

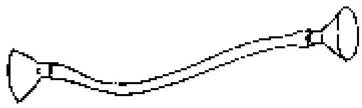

P: Roll a newspaper up into a hollow tube. Place one end of tube against another students rib cage (in the area of the heart).

Q: What do you hear?

O: One can hear the heart beats.

E: A doctor uses a stethoscope to focus the sound from the heart. Another stethoscope idea could use funnels and plastic tube.

I: Try listening after vigorous exercise.

5.3.2 Taking the Pulse

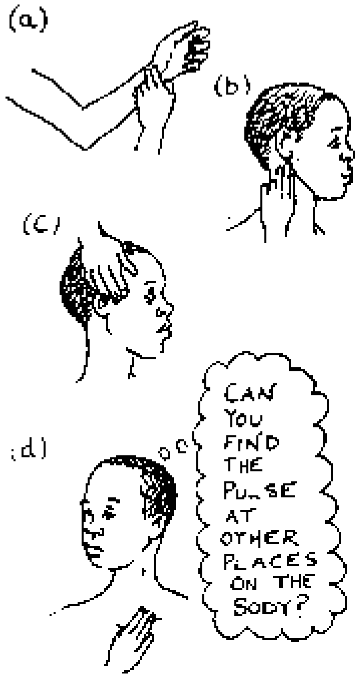

P: There are various places on the body where the pulse may be taken for example (a) at the wrists, (b) under the ear beside the, angle of the jaw, (c) at the temple, (d) above the collar bone.

Q: Can you find the pulse at the various locations?

E: Sometimes you may have to move your finger tips around the area to find the exact location of the pulse or apply a little more pressure.

5.3.3 Listening to Blood Flow

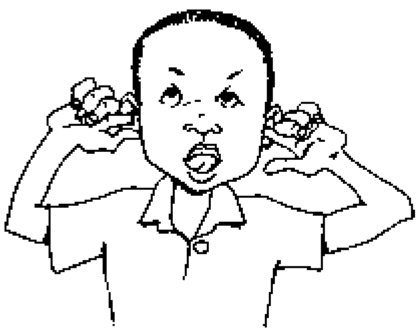

P: Place your index fingers carefully into your ears. This cuts out most external sound. Listen.

Q: What do you hear?

O: A muffled rhythmic beat can be heard.

E: By cutting out external sounds the ears can sense the inner pulse beat of the heart.

5.3.4 Pulse Indicator

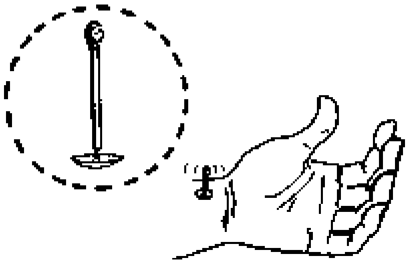

P: Attach a matchstick to a drawing pin and place on the wrist where the pulse is strongest. Chewing gum, clay or a small piece of wood may be used if no drawing pin is available.

Q: What happens to the matchstick?

O: The matchstick moves from side to side

E: The matchstick moves every time a pulse beat passes under the pin.

I: Try using the pulse indicator after vigorous exercise.

5.3.5 Pulse Mirror

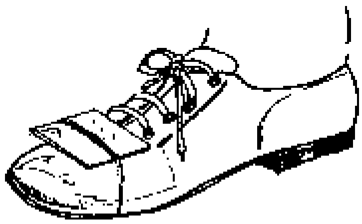

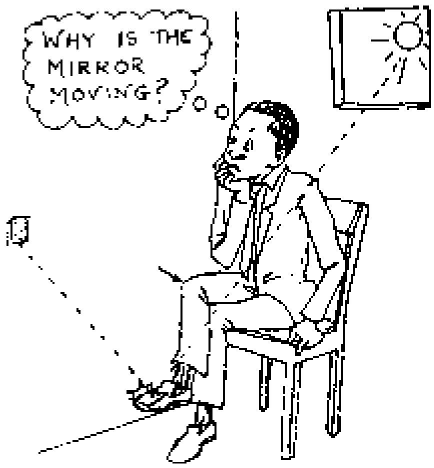

P: Cross your legs as shown above. Attach a small mirror to the shoe of the crossed limb, so that window light or the light of a torch, is reflected by the mirror onto a wall. Sit with crossed legs for a while and observe the patch of reflected light on the wall.

Q: What do you notice about the light reflected onto the wall?

O: The reflected light patch begins to move rhythmically.

E: The crossed leg tends to press on the leg artery and the pulse causes a rhythmic rocking of the lower leg, thus moving the foot and moving the mirror.

5.3.6 Pumping Heart Action

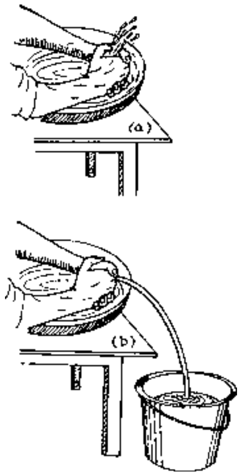

P: (a) Half fill a basin or bucket with water. Place your hands in the water. Open and close your palms pivoting them at the fingers.

(b) Grip your hands and hold a rubber tube in position as shown in the diagram. Open and close your palms again.

Q: What do you observe at the open end of the hands and at the free end of the tube?

O: When the palms are open, water fills the palm cavity and when closed, water is forced out through the rubber tubing.

E: The opening and closing of the palms represent the relaxation and contraction of the heart muscles. Blood enters the chambers of the heart when the muscles relax and is forced out into the vessels as they contract.

5.3.7 Heart Model

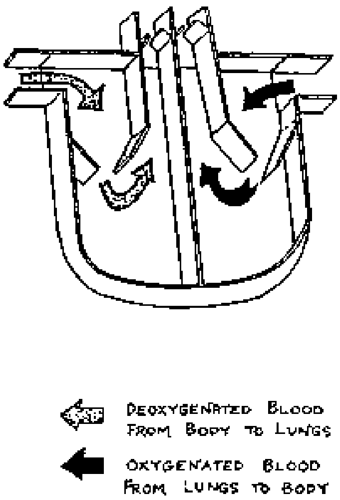

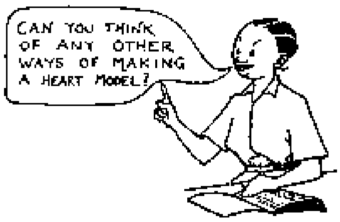

P: Draw a vertical section of the human heart on a piece of hardboard. Cut strips of thick cardboard or stiff paper and glue them on to the board to make a model heart as shown in the diagram. Add arrows. Clay or wood may be used instead of thick paper.

E: The heart is a four-chambered muscular organ. The upper chambers, are thin walled *atria,* which receive blood from the veins. The lower two chambers are the thick-walled *ventricles* which pump blood into arteries.

I: Examine the heart of a large mammal such as a cow or goat.

5.3.8 Ventricle Cross Section

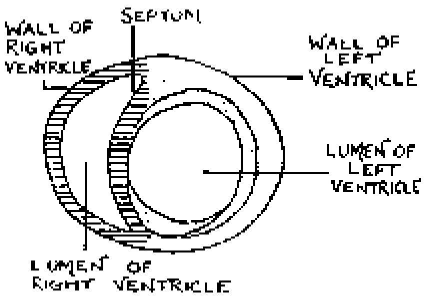

P: Draw and cut out a cross-section though the ventricles from stiff paper.

Q: Are there any differences between the two ventricles?

O: The left ventricle has a thicker wall and larger lumen than the right ventricle.

E: The reason for the difference is that, pumping blood to the nearby lungs, by the right ventricle, takes much less effort than pumping blood to the rest of the body by the left ventricle.

5.3.9 Valves

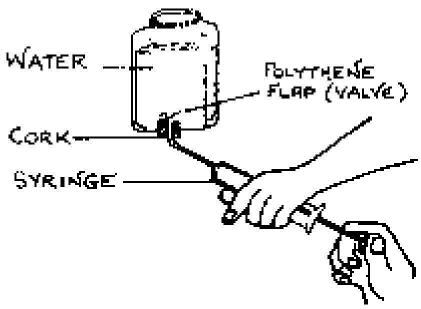

P: Set up the apparatus as shown above. Push in the syringe plunger, then pull it back.

Q: What do you observe?

O: When the plunger is pushed in, the flap opens allowing water into the plastic container. When it is pulled back, the flap closes preventing water from flowing back.

E: The polythene flap acts as a valve allowing forward flow of blood and preventing its back flow.

5.3.10 Valve Models

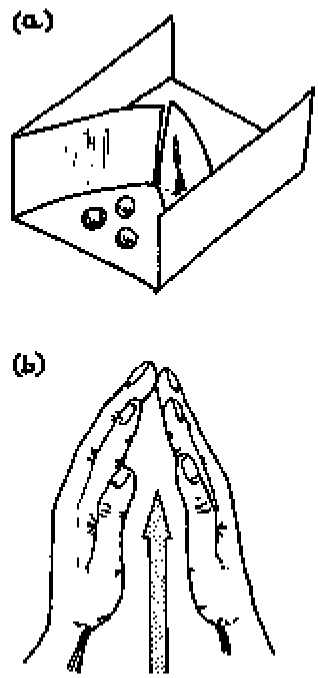

P: Using a card or paper, make a model valve as shown in the diagram (a). Use pebbles or pieces of chalk to show the flow through the valve in the direction shown. Tilt the model backwards.

Q: What do you observe about the flow?

O: The pebbles pass through the valve, but the valve closed preventing the flow going in the opposite direction when the model is tilted backwards.

E: The valves allow flow of blood in one direction only.

I: The action of valves can also be illustrated using touching hands as in diagram (b). Let your neighbour push their hand through the touching fingers in the direction of the arrow.

5.3.11 Pulse Rate and Heartbeat

P: See 1.3.2 and 5.3.2.

5.3.12 Harvey's Experiment

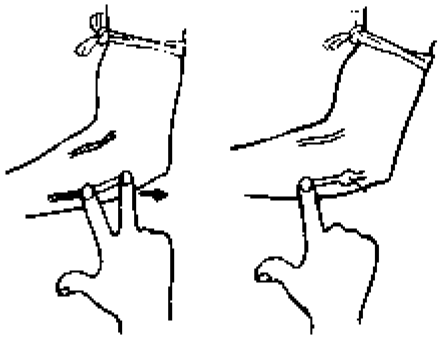

P: Carefully tie a piece of cloth round the upper arm. *Keep this tied for only a short time.* Surface veins fill with blood. Harvey found he could empty a vessel by placing a finger on the raised vessel and pushing the blood out and up the arm with another finger. When he released the finger nearest the heart, the blood did not fill up the vessel again.

5.3.13 Circulatory System Game

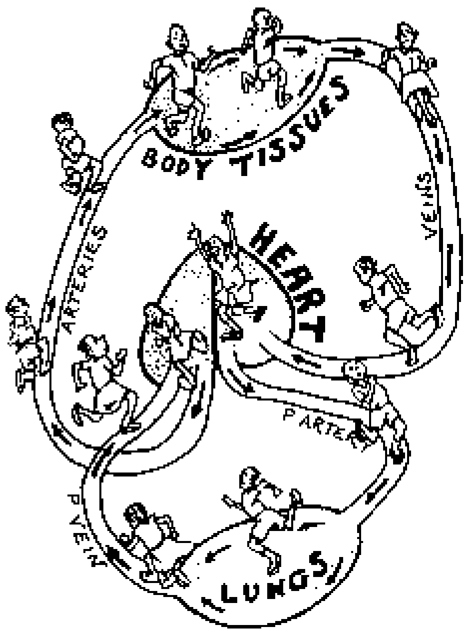

P: Mark out a model of the circulatory system on the ground using stones, string or chalk. Put pieces of red flowers or paper in the area marked *lungs* and pieces of blue flowers or paper in the area marked *body tissues.* To begin the game two or three pupils pick up blue petals at the body tissues and follow the arrows through to the *heart* and on to the *lungs.* At the lungs the pupils drop the blue flowers and pick up the red and return to the body tissues via the other side of the heart.

Q: What do the pupils represent?

E: The pupils represent the flow of blood in the body. They must go through the heart twice before completing the cycle of *double circulation.* As blood flows it transports substances such as oxygen (red flowers), carbon dioxide (blue flowers) and food materials. Pupils can also act as *heart valves.*

5.4. Transport in Plants

Most plants, like animals, have a transport system, although its structure and arrangement are quite different. One type of tissue, the *xylem,* forms a system of open tubes which carries absorbed water and mineral salts from the roots, through the stem to the leaves. Another type of tissue, the *phloem,* consists of living cells, which can transport large molecules such as food Substances in either direction, between any parts of the plant. Water moves up through the xylem by a process called the *transpiration stream* and evaporates from the leaf surface by *transpiration.* Movement of materials through the phloem is called *translocation.*

5.4.1 Plant Vascular Tissues

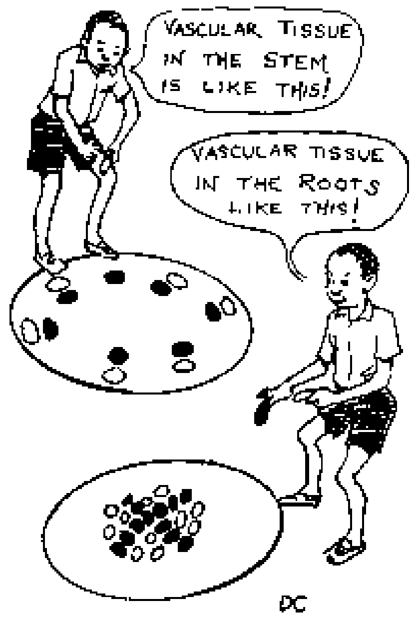

P: Chalk two circles on the floor. Each about one metre in diameter. Cut out 20 discs of newspaper, card or exercise book paper. Colour 10 discs to represent the xylem, the other ten uncoloured discs represent the phloem. Place the different coloured discs of paper in the chalked circles to show the arrangement of the tissues in a stem, and the arrangement in a root.

Q: What are the differences in arrangement between stem and root?

E: Vascular tissue forms a ring of bundles in the stem but a central column in the root.

5.4.2 Root Hairs

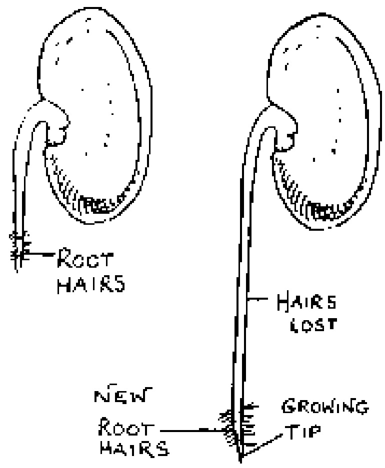

P: Germinate some peas or bean seeds on a damp cloth or newspaper. Leave them until the young root (radicle) emerges. Observe the root tip. (This can be assisted using a simple magnifier).

Q: What is the appearance of the root?

O: A fine covering of thin hair-like structures can be seen, just behind the root tip.

E: A root develops hairs just behind the growing tip. As the root gets older and larger the root hairs are lost. Root hairs increase the surface area of the root for absorption of water and mineral salts.

5.4.3 Root Pressure

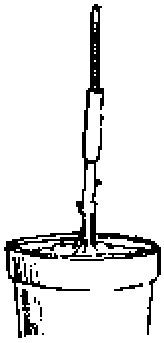

P: Cut the stem of a well grown potted plant about 5 cms above soil level. Place a tight fitting piece of tubing over the stem and insert a narrower tube (of glass or plastic) inside. Seal all joints with vaseline.

O: Water collects in the tube and the water level gradually rises.

E: Root pressure is one of the forces which helps water to move up the stem. It is the force which causes the water to rise up the tube.

5.4.4 The Plant as a Straw

P: Set up the materials as shown. Make sure the clay forms a complete air-tight seal. Suck air through the straw from the air space at the top of the bottle.

E: The plant has a system of tubes (xylem) running from the roots through the stem to the leaves. These tubes end in spaces in the leaf which open to the air through tiny holes called stomata. By sucking, air is drawn in through the stomata and along the xylem tubes to the cut end of the stem and bubbles form.

5.4.5 Movement of Water in a Plant

P: Take a young plant, such as Balsam, which has a semi-transparent stem (Zinnia). Wash the roots well and place in a diluted solution of red or blue ink. Leave for two hours. Coloured ink can be seen moving up the stem and into leaves.

5.4.6 Which parts of the Stem carry Water?

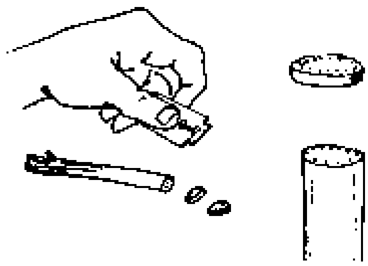

P: Take a plant stem which has been placed in coloured ink or dye. Cut very thin sections with a sharp razor blade. Examine the sections by holding them up to the light on the end of a pin or by using a simple microscope.

O: The colour is located as small dots forming a circle towards the outside of the stem.

E: Water and the dye are carried in xylem tissue which is found grouped together as separate vascular bundles.

5.4.7 Leaf Transport System

P: Spray or dust paint (or ink) onto the leaf surface. Place a piece of paper on the painted surface, press under a weight. Remove the paper to reveal print.

E: Monocot and dicot leaves of flowering plants have vascular bundles which can be seen as veins in the leaves when holding the leaves to the sun. The veins run parallel to each other in monocots and form a network in dicot leaves.

5.4.8 Transpiration -Weight Loss

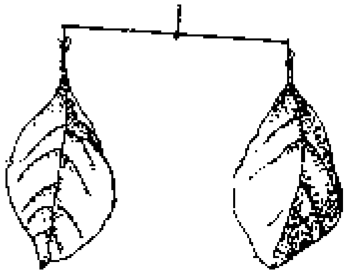

P: Take two leaves of the same size and type. Grease one leaf on both surfaces, then hang each one at opposite ends of a thin stick. Suspend the stick by a thread so that it is balanced

Q: What happens to the balance of the stick?

O: The end of the stick on which the ungreased leaf is hung moves upwards.

E: Leaves lose water by transpiration. This can be prevented by applying a layer of grease. The ungeased leaf loses water and becomes lighter.

5.4.9 Transpiration -Water Loss

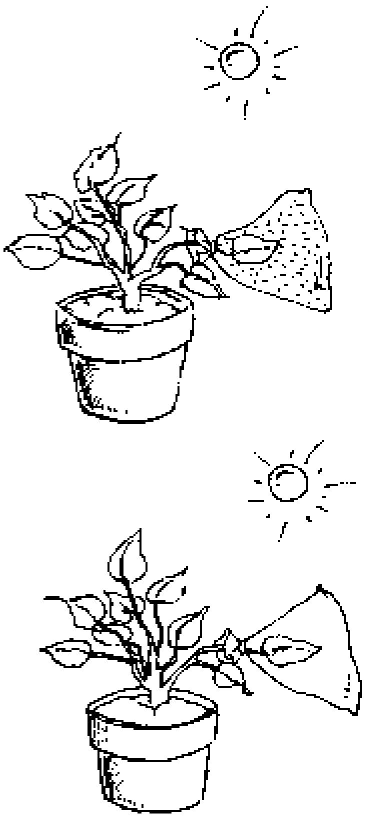

P: Place a polythene bag over the leaf of a living plant. Secure the bag to the stem with a thread. Repeat the experiment with a greased leaf of the same size.

Q: What can you see on the inside surface of the bags?

O: Water droplets appear on the inside of the bag placed over the ungreased leaf. Very little or no water collects in the other bag.

E: Water, which is absorbed from the soil by the plant, is lost through the pores (stomata) of the leaf. This is transpiration. There is no water loss from the greased leaf because the grease blocks the pores.

5.4.10 Leaf Number and Water Loss

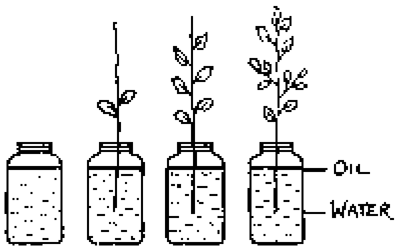

P: Take branches of the same plant with a different number of leaves. Take containers and put an equal volume of water in each. Place a few drops of cooking oil or kerosene on the surface of the water in order to avoid evaporation. Measure the volume of water in each container every day.

E: Water is lost through stomata. The larger the number of leaves the more stomata and the more water lost into the air.

5.4.11 Looking at Stomata

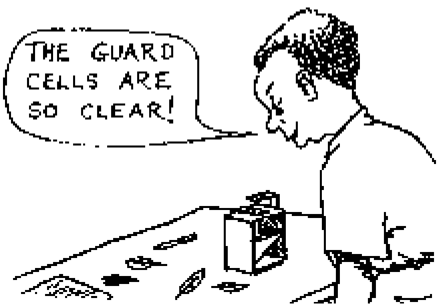

P: Take a leaf of comelina, zebrina or similar. Snap it in half to obtain a ragged edge. With forceps peel off a small portion of lower epidermis. Place this in a drop of water on a glass slide, add one drop of dilute iodine and cover with a coverslip. Examine using a simple microscope (see appendix). The irregular, rounded cells of the epidermis can be seen and scattered through these are curved guard cells found in pairs around the stomatal pore.

5.4.12 Distribution of Stomata

P: Put a leaf into very hot water and observe the changes on it. Repeat the experiment with various types of leaves (monocots and dicots).

O: Bubbles come from the stomata due to the expansion of the air in the leaf. Dicot leaves show bubbles mainly on the lower surface, but monocot leaves show bubbles on both surfaces.

E: Stomata are found mainly on the lower surface of dicot leaves whereas they are equally distributed on both surfaces of monocot leaves.

5.4.13 Stomata Skin

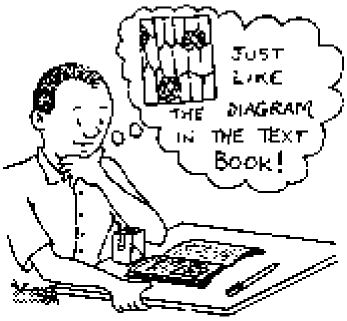

P: Lightly coat the underside of a leaf with clear nail varnish. Allow the varnish to dry then peel it off. Examine the varnish 'skin' under a simple microscope (see appendix).

Q: What do you observe on the varnish 'skin'?

E: Small curved cells are visible around the pores. These are the guard cells of stomata.

I: Try using this technique to examine other surfaces.

6. Gaseous Exchange and Respiration

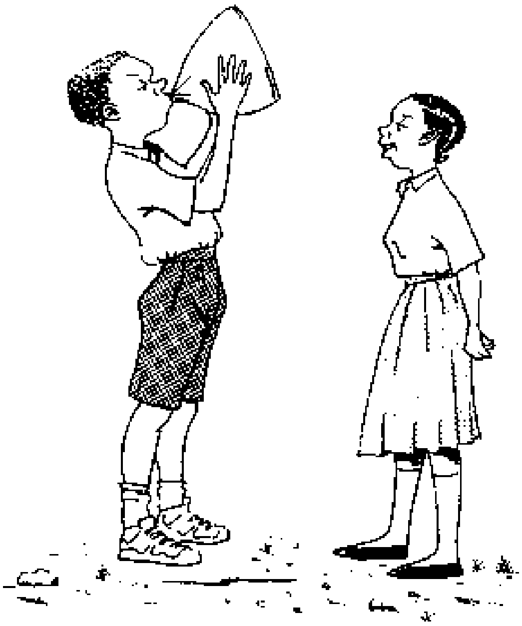

6.1. Ventilation in Vertebrates

Living things use air (oxygen) for the production of energy which is required for carrying out life processes such as movement, growth etc.. *Respiration* is the breakdown of organic substances within cells to release energy (cell respiration). Gaseous exchange of carbon dioxide for oxygen. Gaseous exchange needs a flow of air over a respiratory surface a process called ventilation (or breathing).

6.1.1 Data on Breathing and Fitness

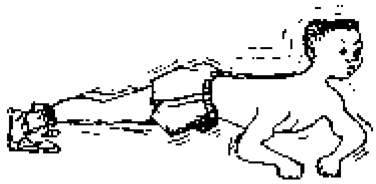

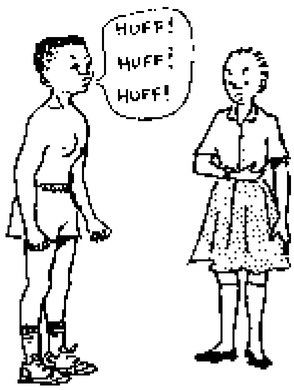

P: Count the number of breaths (on inspiration or expiration) per minute of a number of people a) while sitting, b) while standing and c) after exercise. Tabulate the results and compare. How can you explain the differences?

6.1.2 Air is Not Always Clean

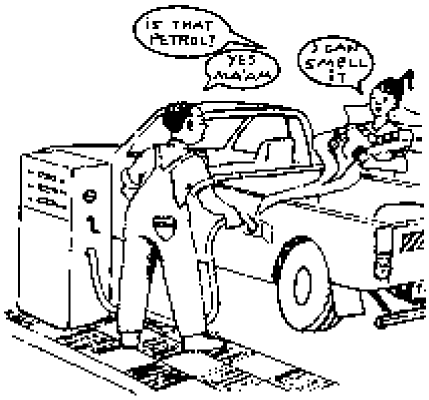

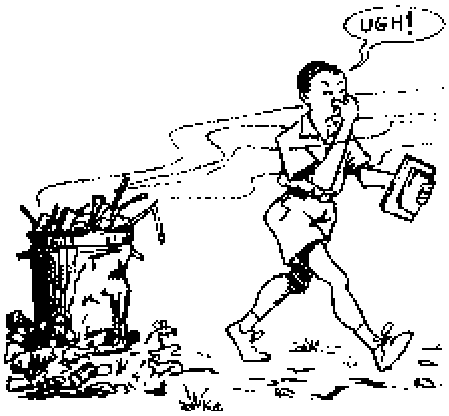

Inspired air is not always clean. It contains many particles which can affect health. Ask the pupils to make a list of areas where air is polluted. Here are a few ideas - a burning waste heap; a car exhaust; latrines that may not be as clean as they should be.

6.1.3 Foreign Bodies in the Throat

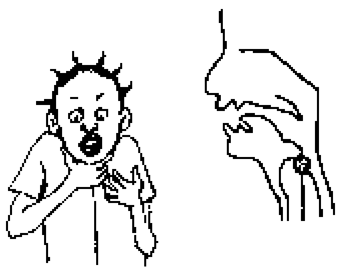

P: A foreign body in the throat is a potentially life threatening problem. When something gets stuck in a person's throat it can block the air passage to their lungs. This is called choking. *A small child is in danger because it may like to put things in it's mouth.* Discuss with pupils the dangers caused by foreign bodies in the throat and how to prevent a person choking.

6.1.4 Feeling the Trachea

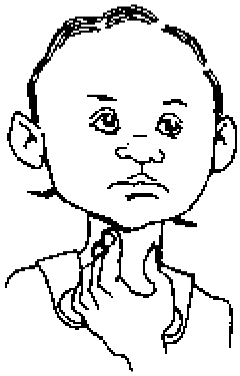

P: Feel your larynx and then trachea with your fingertips. Repeat while swallowing.

Q: What do you notice about the stability and movement of the larynx and trachea?

O: The larynx moves up and down, while the trachea stays almost static.

6.1.5 Trachea Model

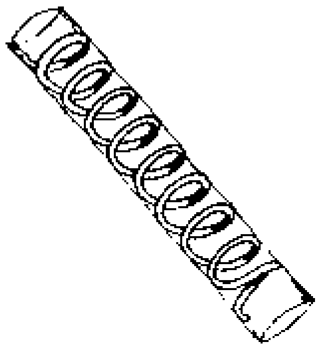

P: Coil a length of flexible wire around a stick. Remove the stick and glue a cover of plastic around the length of the coil, leaving the ends open.

E: The coiled wire represents the rings of cartilage in the trachea which prevent the walls from collapsing. The rings also allow the trachea to be flexible. Demonstrate these properties.

6.1.6 Lung Capacity

P:

a) Fill a two litre plastic bottle with water and invert it in a dish of water. Insert a plastic tube into the neck of the bottle and breathe out gently through the tube. Repeat the experiment but breathe out fully through the tube.

b) Or, blow into an empty plastic bag. Then submerge the bag in a bucket filled to the brim with water. Collect the overflowing water and measure the volume.

E: During quiet breathing half a litre is exchanged. During maximum forced breathing up to 4 litres can be exchanged.

6.1.7 Chest Expansion

P: Take the chest measurement (circumference of the thorax) of a pupil as they breathe in and out deeply. Take the average of several measurements.

E: During breathing in, the intercostal muscles pull the ribs upwards and outwards resulting in the increase in size of the thoracic cavity. During breathing out the opposite happens.

6.1.8 Expired Air contains Carbon Dioxide

P: Breathe out through a straw or the barrel of a ball point pen into filtered limewater.

Q: How does the limewater change?

O: The limewater goes cloudy then later clear.

E: The exhaled carbon dioxide reacts with the calcium hydroxide solution (lime water) and a precipitation, which later dissolves by more carbon dioxide to soluble calcium hydrogen carbonate.

6.1.9 Diaphragm Action

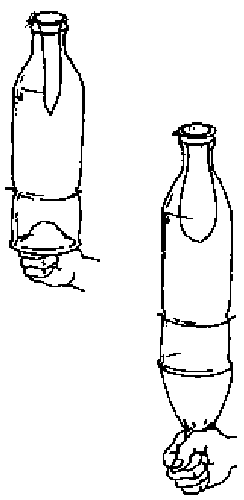

P: Cut off the bottom of a plastic bottle with a sharp knife. Insert the balloon at the mouth of the bottle so that it hangs in the bottle as shown. Tie a piece of plastic bag around the cut base, holding it in place with thread or a rubber band.

E: This simple apparatus can be used to demonstrate the process of inspiration and expiration. The balloon represents one lung. The plastic bag represents the diaphragm and the bottle interior the thoracic cavity. Pulling the plastic sheet down (= diaphragm down) causes an expansion of the (thoracic) cavity bringing about inspiration. The balloon becomes inflated. Expiration can be demonstrated by pushing the plastic sheet to its original position, reducing the volume of the thoracic cavity, thus causing the balloon to deflate.

6.1.10 Rib Movement Model

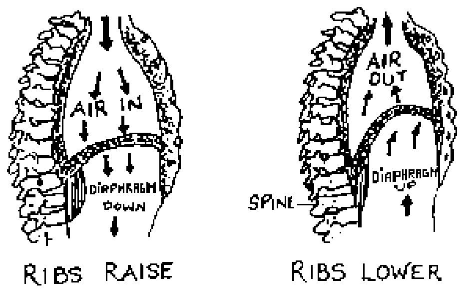

(a)

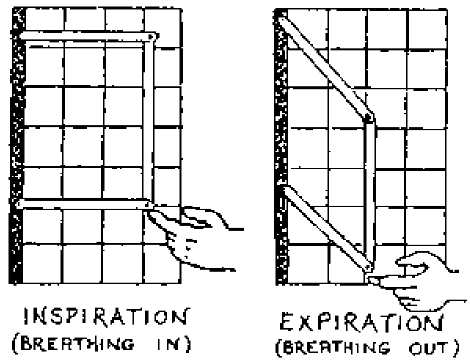

(b)

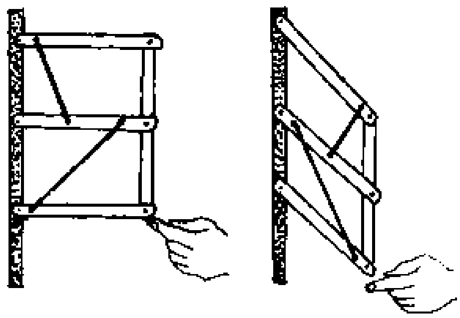

(c)

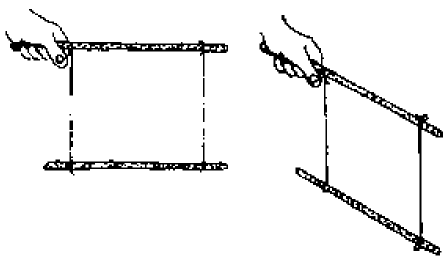

a) Draw squares (3 x 3 cm) on card or hardboard as shown in the diagram. Fix a shaded strip with glue or nails to represent the spinal column. Attach the movable strips to represent the ribs and sternum. By moving the ribs on the model up and down, inspiration can be illustrated. Count only the squares which are over half visible to determine the increase or decrease of the thoracic cavity. Pupils should place their hands on their own ribs to link the model to life. The change in size of the thoracic cavity is due to movements of the ribs and the diaphragm.

b) The model above can be adapted to show the contraction and relaxation of the intercostal muscles.

c) A simple model can be made from two sticks and some thread. Try it.

6.1.11 Exhaled Air contains Moisture

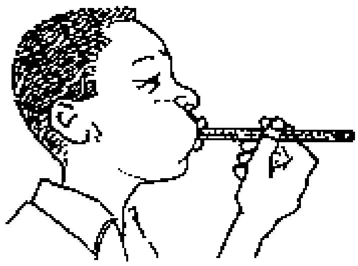

P: Breathe *in* through the transparent barrel of a ball point pen and note what happens. Then breathe *out* through the barrel of the pen and record your observations.

O: When you breathe in the barrel remains clear, but when you breathe out the barrel becomes clouded with water vapour.

E: Expired air contains water vapour which condenses on the inside of the ball point barrel.

6.1.12 Alveolus Model

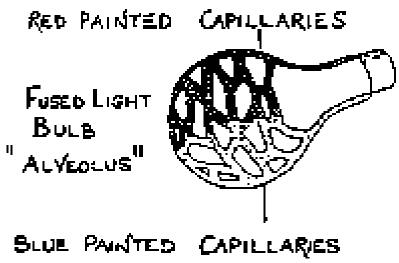

P: A fused electric light bulb can be used to represent an alveolus. With red paint or waterproof marker, draw the blood capillaries carrying oxygenated blood. Use blue for the deoxygenated blood vessels.

E: The lungs contain countless alveoli (air sacs). Each sac is supplied with blood capillaries. The blood coming to an alveolus in deoxygenated, while the blood leaving the alveolus is rich in oxygen.

6.1.13 Gaseous Exchange Game

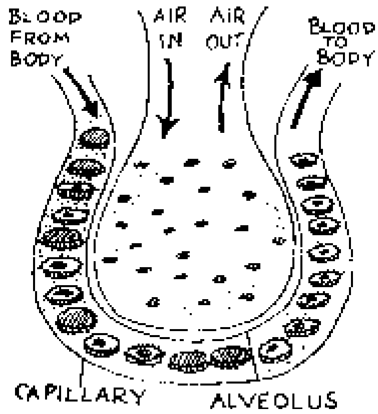

P: Draw the large outline of an alveolus on cardboard or paper (it may also be chalked on table or floor). Draw a surrounding blood capillary. Choose two types of seed, stone or bead. One to represent carbon dioxide (seed) and one to represent oxygen (stone). Paint or mark fifteen bottle tops, red on the inside and blue on the outside. The tops represent red blood cells. Place the tops in the capillary. As the tops (red blood cells) enter the capillary most are turned to blue, to show they contain no stone (oxygen). Carbon dioxide is shown by small seeds in the plasma area of the capillary. Stones (oxygen molecules) are placed inside the alveolus and these are moved into the capillary, to be transported away inside red upturned bottle tops (oxygenated red blood cells). The seeds (carbon dioxide) are moved from the capillary plasma area into the alveolus.

6.1.14 Playing Gaseous Exchange

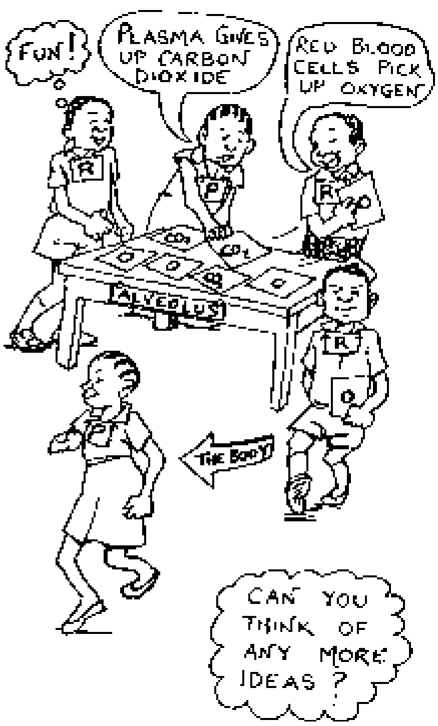

P: Pupils can act out gaseous exchange. A desk or table can represent an alveolus. Write 'oxygen' on ten sheets of paper and place these on the desk. Some pupils pin the letter 'P' or the word 'Plasma' to their clothing. Others pin letter 'R' or 'Red Blood Cell' to their clothing. Each 'P' pupil is given a paper with 'carbon dioxide' on to carry. The pupils then act out their various roles. As they walk round the table (through the capillary), each 'P' pupil deposits their 'carbon dioxide' paper. Each 'R' pupil picks up an 'oxygen' paper from the table and all continue to walk around the table (through the capillary).

6.1.15 Lung Surface Area

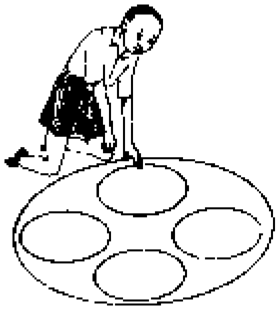

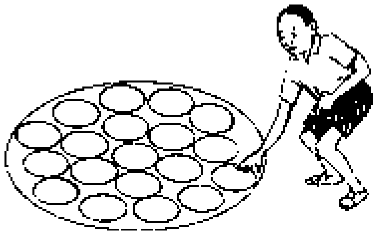

P: Use string or paper to make a circle of 20 cm diameter. Make smaller circles of 10 cm diameter. See how may small circles fit inside the 20 cm circle without overlapping. Measure the circumferences of the large and small circles. Find the total circumference of all the small circles and compare it with the circumference of the big circle. Repeat the procedure using 5,2 and 1 cm diameter circles.

O: As the circles get smaller, their total circumference gets larger compared to the circumference of the big circle.

E: This is similar to lungs which are divided into air sacs, to increase surface area for gaseous exchange. There are about 350 million air sacs in each lung. Because they are so small, the air sacs form a very large respiratory surface (about 25 square metres in each lung?

I: The tracheal system of insects and the gills of fishes all have a large surface area for gaseous exchange.

6.2. Cell Respiration

Respiration is one of the seven vital characteristics of living things. The term respiration is often used in referring to breathing and gaseous exchange, but actually it should only be applied to *cell respiration,* or *internal respiration* which is a chemical process. Respiration, in simple terms, may be considered as a process of energy release by the breakdown of carbohydrate-food stuffs like sugar and starch. These are made up of the elements carbon, hydrogen and oxygen. Respiration can be aerobic or anaerobic. *Aerobic respiration* involves the release of energy by the chemical reaction of carbohydrates with oxygen. These are completely broken down to water and carbon-dioxide. *Anaerobic respiration* is the breakdown of carbohydrates to release energy without the use of oxygen. Some single-celled organisms like yeast and bacteria derive most of their energy anaerobically, a process which is also *called fermentation.* Bread, beer and wine production are examples of the application of fermentation.

6.2.1 Carbohydrates contain Combustible Elements

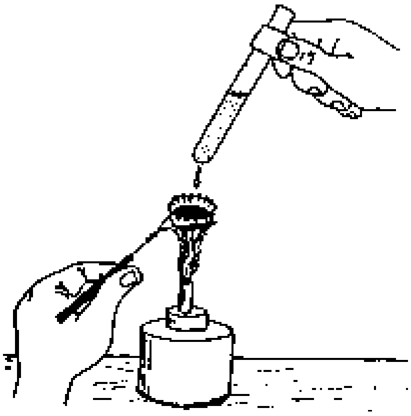

P: Heat some sugar in a soda bottle top using a kerosene burner (kibatari). Hold a water filled glass or test tube above the bottle top.

Q: What do you observe?

O: The sugar first turns dark brown, then black and drops can be observed condensing on the glass.

E: This shows that carhohydrates are made up of carbon, hydrogen and oxygen atoms (the latter two form water).

6.2.2 Combustion and Respiration

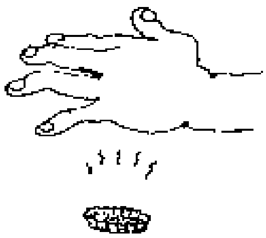

P: Heat some sugar in a soda bottle top as in the previous experiment. When the sugar is bubbling remove the cap from the heat. Put your hand above the heated sugar and note the temperature. Feel the temperature of your body with your hand.

Q: How does the temperature of the your body compare with that of burning sugar?

O: The burning of sugar produces a high temperature. The human body has a constant but moderate temperature (37 degrees C).

E: Combustion (or burning) is the rapid release of energy in an uncontrolled reaction. Respiration is the slow release of energy during a controlled reaction involving enzymes.

6.2.3 Exhaled Air contains Carbon-Dioxide

6.2.4 Germinating Peas produce Carbon Dioxide

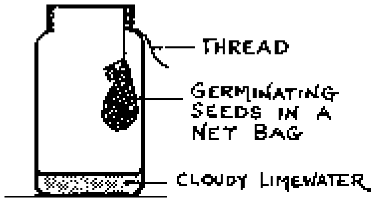

P: Put a little lime water into a wide-mouthed glass jar and hang a perforated plastic bag, containing soaked and germinating peas. Make sure that the peas are separated from the liquid. Seal the jar well and leave it to stand for a few hours.

Q: What happens to lime water?

O: The limewater becomes cloudy.

E: The germinating peas respire giving out carbon dioxide

I: Different kinds of germinating seeds, plant shoots and small animals can be used instead of peas.

6.2.5 Temperature Change

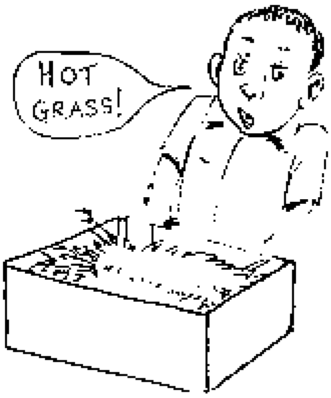

6.2.6 Measuring Temperature Change

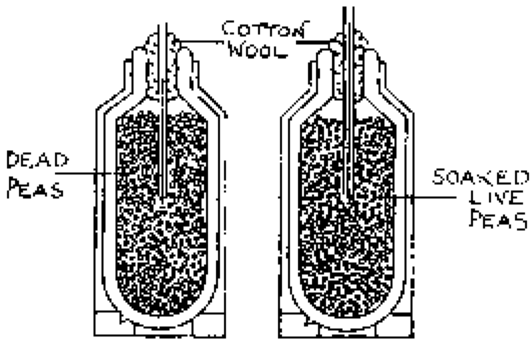

P: Fill a thermos flask with germinating pea seeds or wheat grains. Place a thermometer into the peas and close the mouth with cotton wool. Set up a control test with seeds which have been boiled.

Q: What happens to the temperature?

O: The temperature rises in the flask with the living seeds, but not in the one containing boiled seeds.

E: Respiration produces heat.

6.2.7 Fermenting Sugar

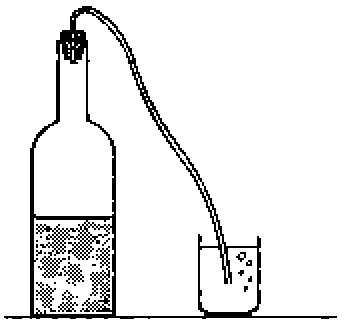

P: Half fill a bottle with a solution prepared from 1 cup of water, 1 tablespoon of sugar and 1 tablespoon of yeast. The gas produced can be directed into lime water.

Q: What do you observe?

O: The bubbles of gas turn lime water cloudy.

E: The yeast cells ferment the sugar giving off carbon dioxide gas.

6.2.8 Fermenting Fruit

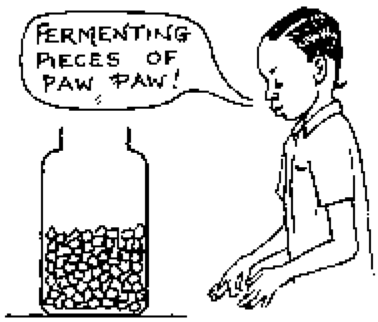

P: Prepare a pulp of paw paw. Put the pulp into a glass. Let it stand for some time in a warm place.

Q: What can be observed?

O: Gas bubbles are formed in the pulp.

E: The pulp is fermented because the sugar contained in it is acted on by wild yeast, which grows on the skin of the fruit. Yeasts are also found in air.

6.2.9 Local Alcoholic Drinks

P: Try to find out the names of as many locally made alcoholic drinks as you can.

Q: From what ingredients are they made?

E: Mbege, kangara, dengeluwa and tembo are examples of locally made alcoholic drinks. They are made from different cereals, honey and many other sugar and starch-containing raw materials. Fermentation (anaerobic respiration) takes place in the process of making each of these drinks.

6.2.10 Plants reach for Oxygen

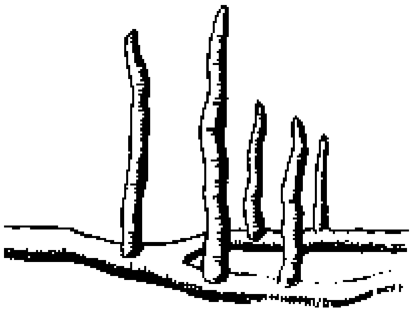

P: Go for a field trip and look for mangrove trees. Observe the kind of ground they grow in and the special roots they have developed.

Q: Why do parts of their roots grow in air?

E: The ground where they grow is water logged and therefore does not contain much air (oxygen). Red mangroves develop stilt roots and white mangroves breathing roots for obtaining oxygen from the atmosphere.

7. Micro-Organisms

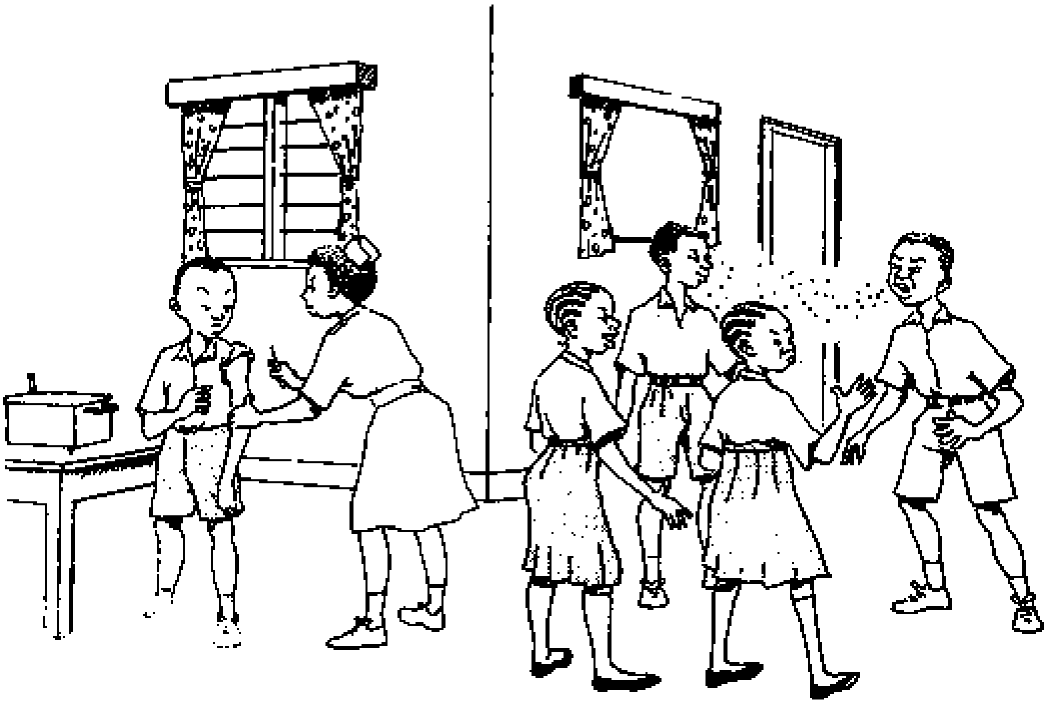

7.1. Microbes in Daily Life

Microbes are tiny living organisms which are too small to be seen with the naked eye. They are found in very large numbers almost everywhere on this planet. They inhabit water, soil, air, food, clothes, the surface and tissues of animals and plants as well as many other places. The main types of microbes are *bacterial fungi, viruses* and *protozoa.* Microbes are important to us because many of them can be either beneficial or harmful. The harmful ones cause animal and plant diseases, spoilage of food stuffs, and attack textiles and other materials. Useful microbes include those used in industry and medicine and the decomposers responsible for the recycling of useful materials in the ecosystem More specialised types are the nitrogen fixers and the symbiotic cellulose digesters found in the gut of herbivores. In fact without microbes, life on earth, in its present form would not be possible.

7.1.1 Bread Making

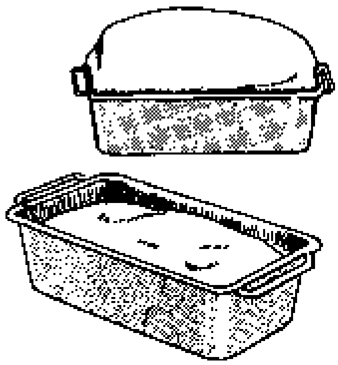

P: Mix 100 g of plain flour and 5 g sugar with a little water. Separate evenly into two containers. In one container, mix in 7 g of yeast. Mix the contents in both containers to make a dough. Cover the containers and leave them to stand for a few hours.

Q: What happens?

O: The dough which contains the yeast rises.

E: Yeasts are living cells which respire, grow and reproduce. The carbon dioxide produced by yeast during respiration causes the dough to rise. The gas lightens the heavy starch mixture and when it is baked, the yeast dies, but the gas bubbles remain as small holes in the bread.

I: Yeasts are also widely used to produce alcoholic drinks during the fermentation of naturally occuring sugar solutions or starch.

7.1.2 Nitrogen Circulation

P: Watch what happens to dead plant or animal material over a period of several weeks.

Q: What do you observe?

O: It rots and breaks down into small particles

E: When a plant or animal dies, its tissues are decomposed by fungi and bacteria to form humus. Animal faeces is similarly broken down. The ammonia formed is washed into the soil, where it is acted upon by different types of bacteria, eventually converting them into nitrates essential for plant growth.

7.1.3 Nitrogen Fixers

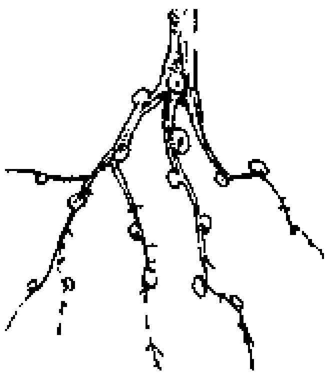

P: Examine the roots of leguminous plants such as peas and beans.

Q: What do you see on the roots?

O: Small knot-like swellings.

E: Swellings called *root nodules* are found on leguminous plants. They contain bacteria, which fix nitrogen from the air to form nitrogenous compounds, which can be used by plants. In this way, they restore the nitrogen content of the soil.

7.1.4 Grass - Milk Link

P: Watch what a cow drinks and eats.

Q: Does it eat anything special?

O: It eats grass and drinks water.

E: The cow like any other ruminant has a modified stomach for digesting plant material. Digestion is possible because of the presence of *symbiotic bacteria* in the stomach, which produce cellulase enzyme for catalysing the breakdown of plant cellulose into useful nutrients. Thus, milk is produced as a result of enzyme action on the vegetation that a cow takes in.

7.1.5 Preserved Food

P: Take three small fishes and wash them thoroughly. Remove all the scales and intestines. Smoke the first fish on a ready-lit sigiri. Salt the second fish and leave the third one untreated. Leave the fishes overnight.

O: The salted and smoked fishes are still good, whereas the untreated one has gone bad.

E: Microbes grow on the untreated fish but do not survive on salty surfaces. Smoking preserves the fish and so it is not easily attacked by bacteria. Since microbes are numerous in the environment, we should know how to control their growth and therefore be able to preserve our food.

7.1.6 Helping Healing

P: When the body is wounded clean the cut with water and little antiseptic, removing all foreign bodies.

Q: Why do this?

O: The wound heals more swiftly if foreign bodies are washed from it as these may include infections microbes.

E: The antiseptic kills certain microbes not removed by washing.

7.1.7 The Rot Spreads

P: Put two fresh tomatoes in a small container and cover them. Place another tomato together with a rotting tomato in a similar container. Cover it.

Q: Examine daily. What happens to the tomatoes?

O: The tomato with the bad tomato is likely to rot faster that those without.

E: Microbial growth spreads very fast with rotting food as a source.

I: It is advisable to separate rotting food from fresh food as soon as possible or else all of it will go bad.

7.1.8 Mouldy Food

P: Place different types of food such as very ripe orange or tomato, half a pawpaw or coconut or even old bread, in a dark damp cupboard. Examine the food after 2 days.

Q: What does it look like?

O: The food becomes mouldy and patches of different colours appear on the surfaces, most of which look hairy.

E: These are the moulds which belong to a group of non-green plants called fungi. Like any other living micro-organism, they need food in order to grow and reproduce.

7.1.9 Healthy Living

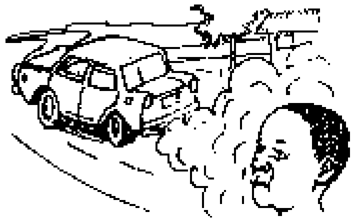

P: List as many examples as you can of unhygienic practices.

Q: Explain why they are likely to lead to the spread of disease and suggest how they could be improved.

E: An unhealthy environment enhances the spread of diseases such as cholera and typhoid. Proper disposal of human and domestic waste will create a good environment to live in. Drinking clean water and eating properly prepared food with clean hands helps to ensure healthy living.

7.1.10 Virus Models

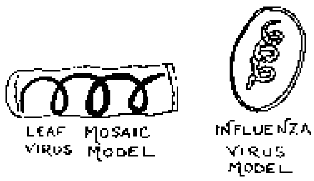

P: Model a leaf mosaic virus (a) or influenza virus (b) using polythene, paper, thick string and coiled wire.

Q: What does each material represent?

O: The thick string and polythene represent the protein coat; the coiled wire the nuclear material.

E: Infuenza and leaf mosaic viruses are examples of viruses that affect our health -and our crops. They are basically made up of proteins and nucleic acids. Other examples of viruses are poliomyelitis, measles, AIDS, yellow fever, and small pox.

7.1.11 Why Milk Goes Bad

Q: Why does milk become sour?

E: Milk goes bad because bacteria have begun to feed on the milk. The sour taste is due to lactic acid which is formed as a waste product of bacterial growth.

I: Mothers who bottle-feed their babies should ensure that the milk they give their babies has been boiled and that all equipment they use is sterile.

7.1.12 Mind Your Body

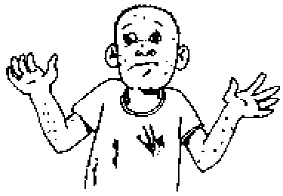

P: Put baby powder or flour over pupil's arms and face. Let another pupil touch them.

Q: What happens?

O: The pupil who had no powder on his body now has some.

E: Some diseases such as scabies, ringworm, and conjuctivitus are spread by direct or indirect contact with another person. Care has to be taken to avoid unnecessary contact, sharing of unclean combs, clothes and any such items which can spread harmful microbes.

7.1.13 Coughs and Sneezes Spread Diseases

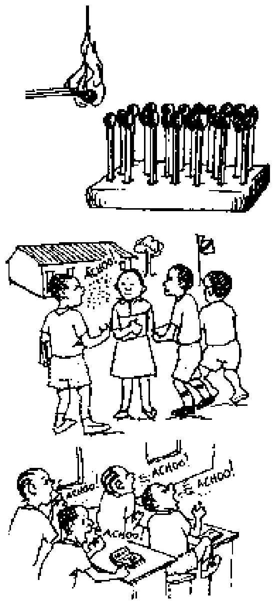

P: Place the matches in the clay as shown and ignite one.

Q: Why is it dangerous to cough or sneeze without covering the mouth or nose?

E: Moisture may be seen leaving an uncovered mouth or nose. The water droplets contain microbes. If one is suffering from an airborne disease such as influenza or tuberculosis sneezing or coughing could be a source of spreading the harmful microbes. It is necessary to be aware of this when coughing/sneezing, so that we do not spread the germs to others. Doctors and nurses wear masks to stop germs from their noses and mouths getting on to people having operations or on to newborn babies.

7.1.14 Diarrhoea

P: Note occasions when something irritates your bowel and diarrhoea starts quickly and unexpectedly.

Q: Why should it happen so quickly?

E: If you eat contaminated food or various foods which your bowel is not used to, the bowel muscles work hard pushing out the remains of the food before the canal walls have had time to absorb the water. If it stayed there long enough, the food poisoning bacteria could get into your blood. The bowel muscles can push so hard, that they force the end of the bowel open and you have to run!

I: The harmful microbes present in contaminated food could be bacteria and protozoans. In addition to diarrhoea, one can get rid of the unwanted food by vomiting.

7.1.15 ORS Miracle

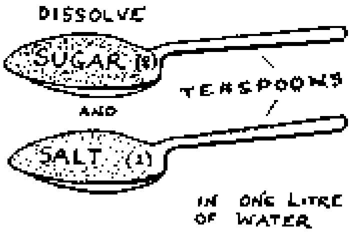

P: Dehydration caused by diarrhoea is the biggest single killer of children in today's world!

Q: How can death be prevented?

E: When people suffer from diarrhoea and/or vomiting or from severe burns, they may lose much more water than they take in. This is life threatening, since the body needs a lot of water for normal functioning. With the water the body loses essential electrolytes (like Na, K, Cl.) Mix 8 teaspoons of sugar and 1 teaspoon of salt with a litre of clean water. Gently make the patient drink cups of this *oral rehydration solution* to replace lost water and salts.

7.1.16 Water Baby

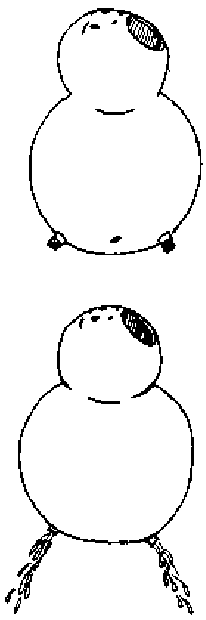

P: Make a model baby from a dry gourd, tin or plastic bottle. Put a hole in the top and two at the base, as shown. Place corks or plugs in the lower holes. Fill with water then remove plugs.

Q: What does this model show?

E: Diarrhoea causes loss of body water. This must be replaced or the person will die. Babies with diarrhoea, can die very quickly if not given enough water to drink. See previous activity 7.1.15.

I: Diarrhoea is usually caused by microorganisms which are spread by dirty water or food, or poor hygiene.

Appendix

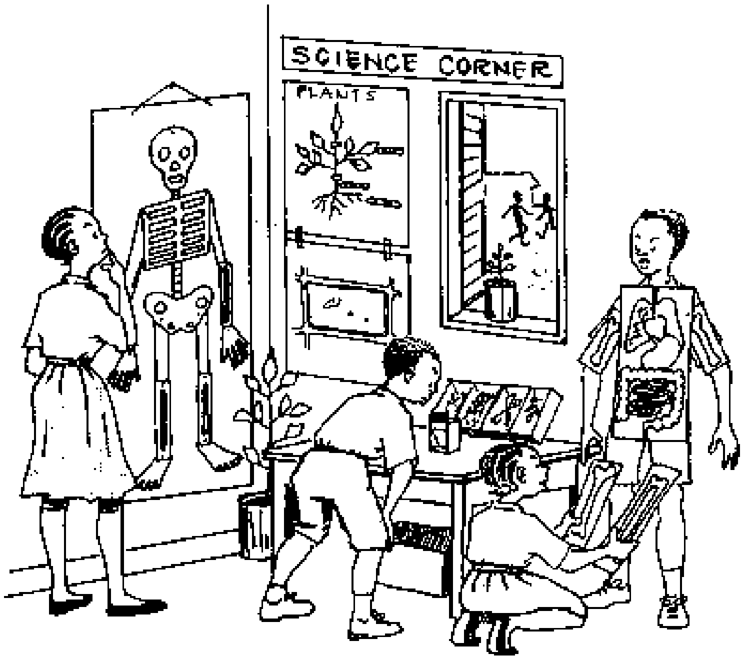

Basic Equipment

The majority of activities described in this sourcebook can be carried out using readily available, everyday materials. Within these activities there are many "hand experiments" because the main equipment needed is a pair of hands! A few experiments require additional items and these are described below, along with some simple instructions for their use. If you require more specialised equipment refer to the chemistry sourcebook in this series where a complete minilab is described.

1. Burners

Many experiments in biology do not require heating. However there are important experiments which do need heating. Hence we have tested different types of low-cost burners.

Always be careful when using burners, especially when liquid fuels are involved and. inflammable vapours are formed. Therefore avoid warming up fuel containers. Use only the suggested fuels never use petrol.

1.1 Alcohol Burner

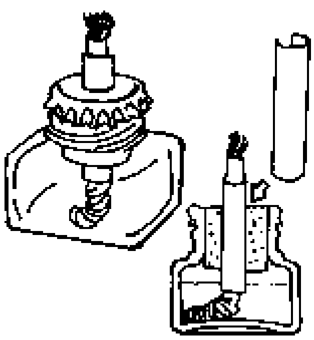

Alcohol (spirit) burners are the best substitute for bunsen burners. Their flame is sootless. However spirit is not always available, it is expensive and sometimes diluted with water. Alcohol burners must have a small glass bottle as container for the liquid in order to avoid rusting. The wick holder consists of a metal tube (made by rolling a piece of tin into a cylinder), a perforated soda bottle top and a wooden stopper. Rubber stoppers are *not* suitable. *Kibatari from tins will do, but filled with alcohol they rust inside and are then dangerous (alcohol always contains water).*

1.2 Charcoal Burner

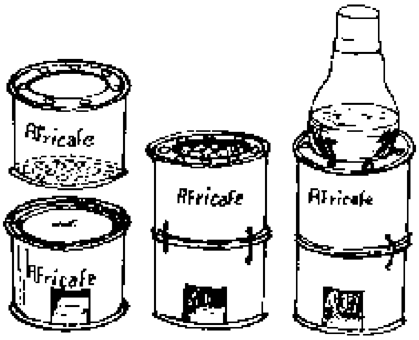

Charcoal burners also produce sootless flames. But it is more difficult to keep the charcoal burning. However blowing slightly using a blow pipe or a straw will solve this problem.

Take two coffee tins. The lower one has a hole in it (a door) to give a good draught and for removal of the ash. The upper one has some holes (which should not be too small) at the bottom and in the upper rim for a good draught. Both tins are fixed together with wire. We achieved good results in tests with this burner.

1.3 Kerosene Burner

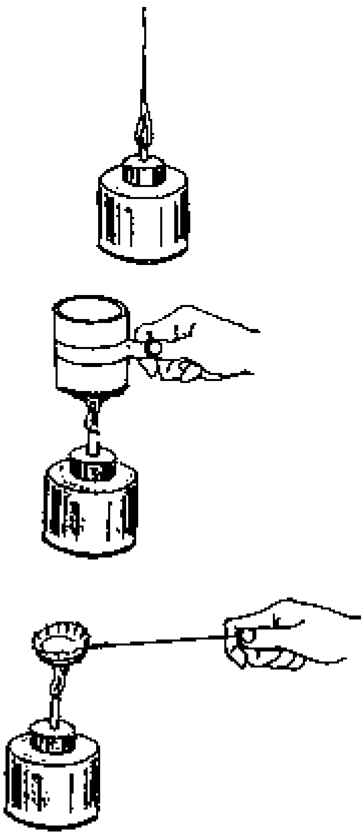

Kerosene burners (Vibatari) produce a lot of soot, but the fuel is cheap, easily available and the burners can be bought on the market. Such burners are suitable for the heating of tins and other containers when soot does not matter.

1.4 Blowpipe

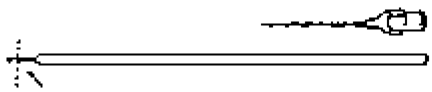

You may need a higher temperature or a directed flame. An empty metal ballpoint pen refill with the tip cut off and connected to a short length of infusion tubing. Discarded injection needles will also serve the same purpose. *However injection needles must be sterilised in boiling water for at least 15 minutes.*

1.5 Heat Source Temperatures

The workshop team has measured the approximate temperatures achieved with different types of burners:

Temperature of different heat sources:

Type	Average temp	Highest temp
Candle	650°C	700°C
Kerosene burner	650°C	800°C
Alcohol burner	650°C	800°C
Matches	600°C	650C
Bunsen burner	1400°C	1500°C
Candle/Kibatari + blow pipe	800°C	
Alcohol burner with blow pipe	1000°C	

1.6 Sootless Kerosene Burner

The *sootless kerosene burner* solves all the problems mentioned above. During the workshop from which this book originates we designed and tested such a burner. It was later constructed by a craftsman in Morogoro. Since this burner seems to solve the heating problems of many schools in many countries, we have published the construction details in a German magazine for Appropriate Technology.

The addition of a simple and cheap device that can be made by the same 'fundi', we get an almost sootless flame from an ordinary kibatari. The principle is to improve the draught of the air stream to the kerosene.

The basic device consists of 4 parts:

- *A perforated inner chimney* is made from a tin which is about 1.3 cm wide and 7 cm long. If the diameter of this tube is too small, the flame will not burn; if it is too wide the effect will be minimal. The holes can be made with a nail and should have a diameter of 2 mm. There should be 3-4 holes per square centimetre.

- *An outer chimney* which also serves as a wind shield. The holes at the lower edge are about 5 mm in diameter.

- Both chimneys fit together in a *perforated* soda bottle cap as shown.

- Ask the fundi to solder another soda bottle cap around the *wick holder (d).* This holds the chimneys better.

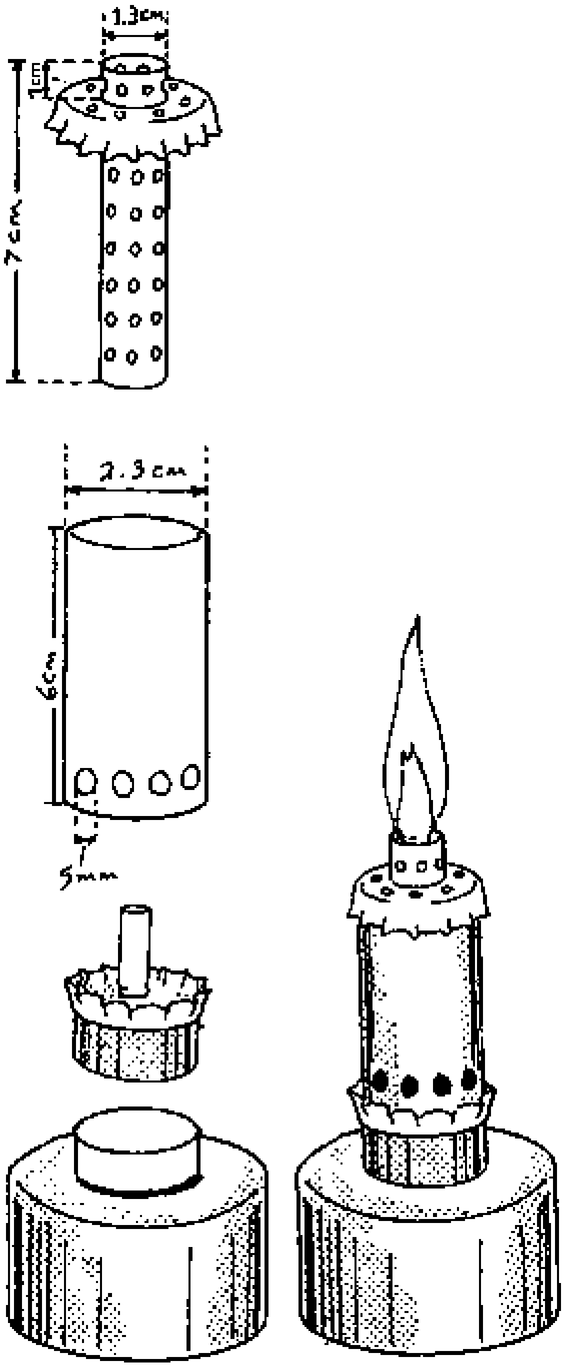

The flame is optimised by adjusting the length and shape of the wick: it should have contact with the perforated tube. Some tests might be needed to obtain an optimal result. First ignite the wick and slowly place the chimneys in position. You might need to hold a burning match stick above the chimney to ignite the hot gases which produce the sootless flame.

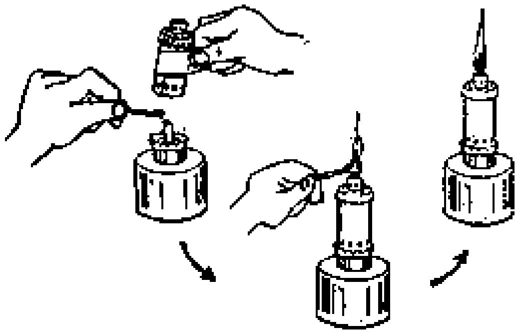

2. Test Tubes and Flasks

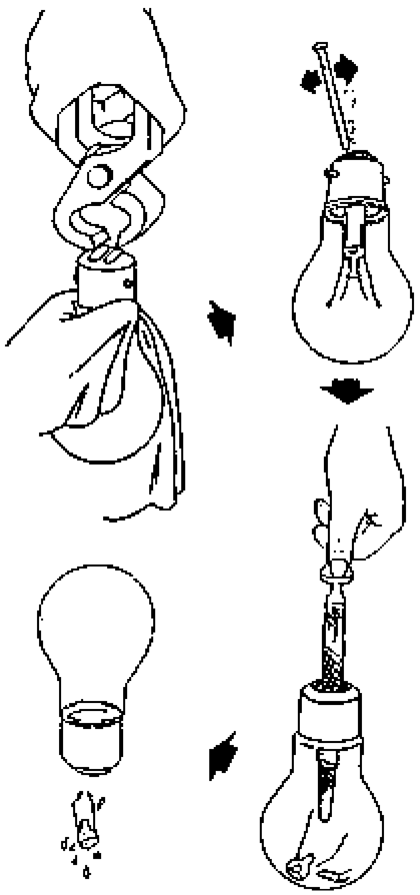

A cheap substitute for expensive test tubes and reaction flasks are opened worn out electric bulbs. They resist the temperature of an alcohol or kerosene burner, but *not* the temperature of a bunsen burner. Heat the bulbs carefully. *Do not use them for aggressive substances like concentrated acids and hydroxides.*

Bulbs can be opened with pliers and a round file or even with a long pointed nail. *Wrap your hand carefully with a piece of cloth.*

3. Glassware Holders

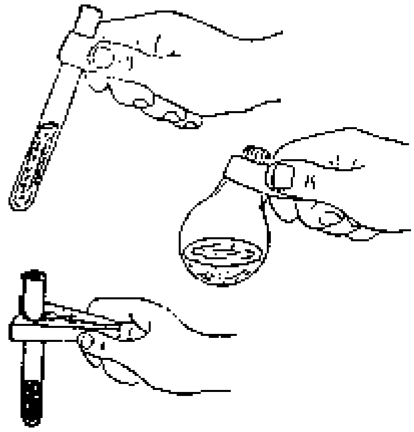

For hand experiments clamps are not essential. A folded paper strip will do as a test tube (or bulb) holder. Wooden clothes pegs are cheap substitutes for test tube clamps.

4. Test Tube Brush

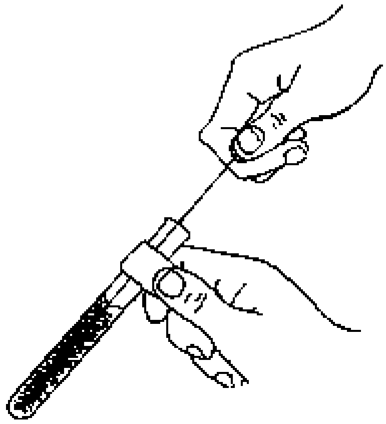

This brush can be made using a piece of cloth, sisal fibres, polythene material etc.. It can be fastened between two twisted wires. Sterilised old tooth brushes may be used. Test tube brushes are also available in shops.

5. Filter Paper

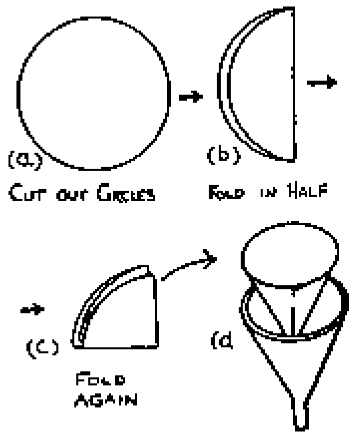

The best substitute for filter paper is unprinted cement bag paper (the inner cleaner layers from bags). Clean it before use. Sometimes the filtrate may have a light colour due to the colour of the paper.

6. Soda Bottle Tops

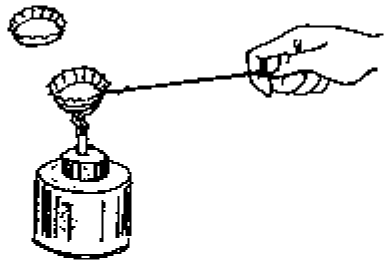

Before use remove the plastic material inside the soda bottle tops. They may be used for heating small amounts of undangerous substances. After use they may be thrown away.

7. Containers

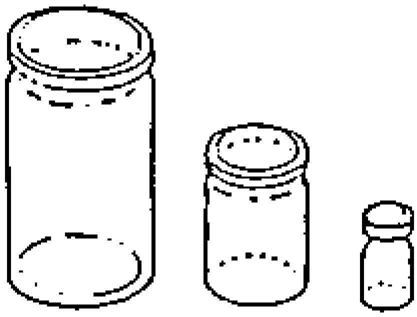

(a)

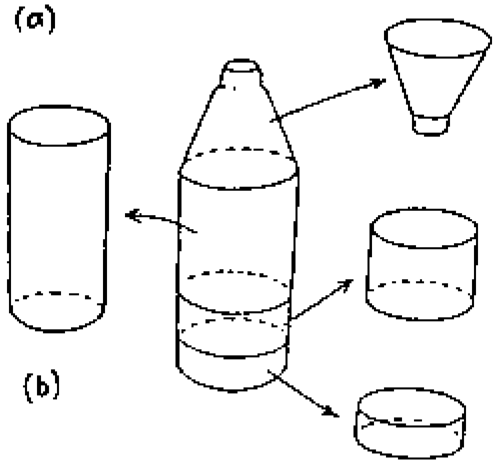

(b)

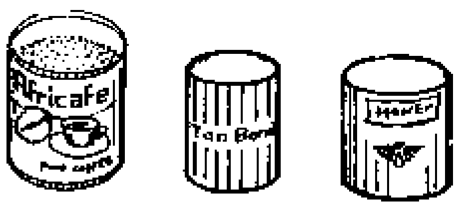

(c)

(a) For many experiments at room temperature (e.g. filtration etc.) glasses or plastic vessels may be used. Small medicine bottles (e.g. injection bottles) are useful for many experiments at room temperature and for the storage of liquids and solids.

(b) A plastic bottle serves many purposes depending on where it is cut. The upper part gives a *funnel.* From the lower part tall or small beakers may be obtained for experiments at room temperature.

(c) Tin cans are only useful for heating water or aqueous solutions where glassware is not needed.

8. Simple Balances

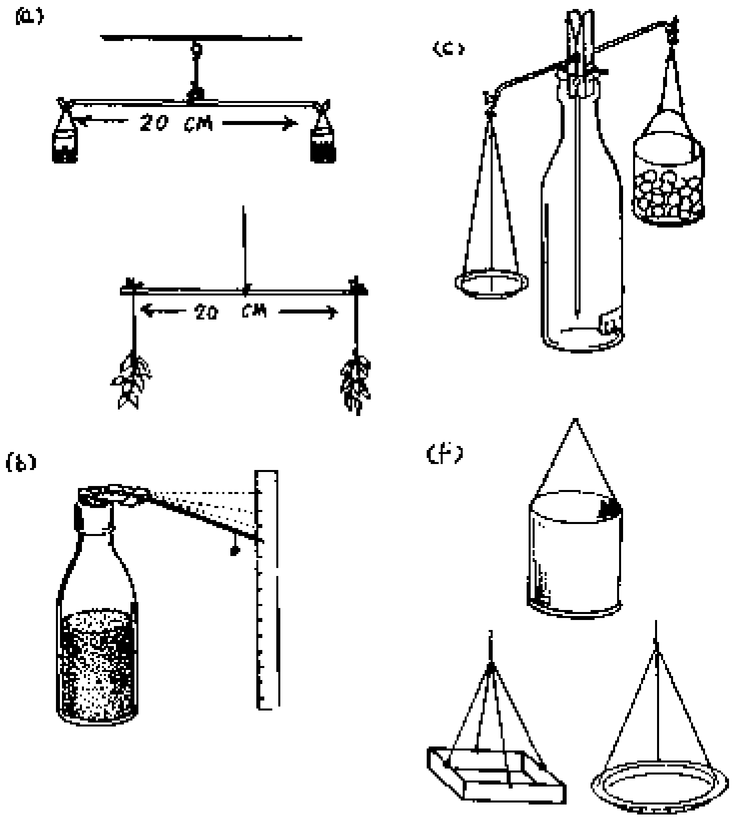

(a) A *simple balance* to show differences in weight consists of a piece of thin wire or a thin wooden stick hanging from a thread. Hooks for hanging containers can be made from paperclips. Plastic bags can be used as hanging containers.

(b) A *razor blade* balance may be made from a razor blade and a light straw. It is a sensitive balance.

(c) To make a *sensitive balance,* drill a hole through a clothes peg below the spring, for a wire or nail to pass through. Fix a wire right in the spring as a balance beam, and another one in the mouth of the peg as a pointer. (The shorter and thinner the pointer, the more sensitive the balance.)

Fit the arrangement in a wide mouthed glass or a plastic bottle marked with a scale.

(d) Fill small plastic bags with sand or small stones and compare them with standard weights. Label and seal the bags with a small flame.

(e) Where there are no standard weights, use syringes or measuring cylinders to fill plastic bags with equal amounts of water. Use the fact that 1 cubic centimetre of water has a mass of 1 gram.

(f) Weighing pans can be made from matchboxes, plastic and tin lids or small plastic bags used for wrapping ground nuts.

9. Pair of Forceps

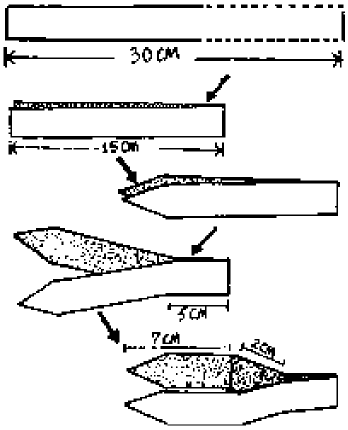

Forceps can be made from the steel bands used for packaging. A 30 cm piece of steel band is cut using a tin snipper and bent in the steps shown.

10. Some Other Instruments

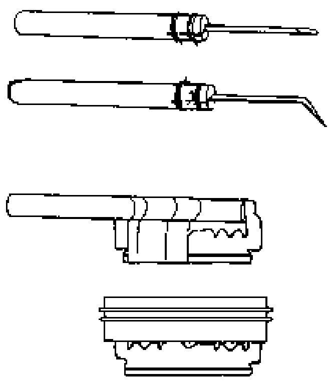

The above instruments are useful for dissection.

11. Simple Microscope

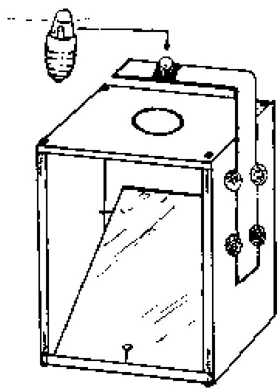

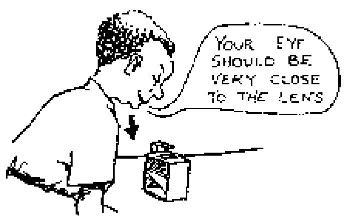

Construct a small wooden box from plywood as shown (or use a small cardboard carton such as a light bulb box). Make a round hole of 2 cm diameter, at the top. Fit a small mirror (glass or polished metal) in the box, angled to reflect light up through the hole. Make a small hole (about 6 mm) in a strip of metal or card. Remove the round lens from a pen-torch bulb and secure in the strip using adhesive tape. Carefully cut off the tape where it may cover the lens. Bend the strip, then fix it to the side of the box so that it can be moved up and down. Drawing pins or nails could be used for this. The object is focused by moving this strip. Note the eye should be placed as near as possible to the lens when viewing.

12. Slide and Cover Slips

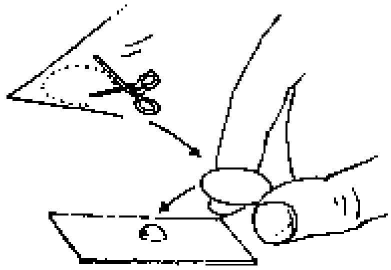

A small piece of window glass or the glass from a torch provides a slide for mounting the specimen. The specimen will be seen better if it is covered with a coverslip. These can be made from thin (but stiff) transparent plastic from display packaging. Cut into small squares or circles.

14. Magnifiers from Used Light Bulbs

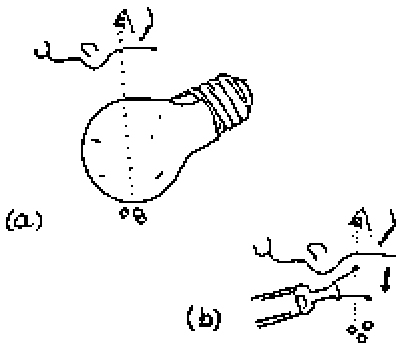

(a) A used transparent light bulb can be filled with water.

(b) The filament wire of a light bulb or thin wire twisted into a loop, can be used as a magnifier placing a water drop in the loop. (The smaller the loop better the magnification).

The diagrams above show some aspects of a mini-lab which can be assembled from locally available materials. The cost is so low that they will not overstress limited school budgets. More than 100 simple experiments can be carried out with it. For details see the chemistry source book in this series.

15. Basic Tool Kit

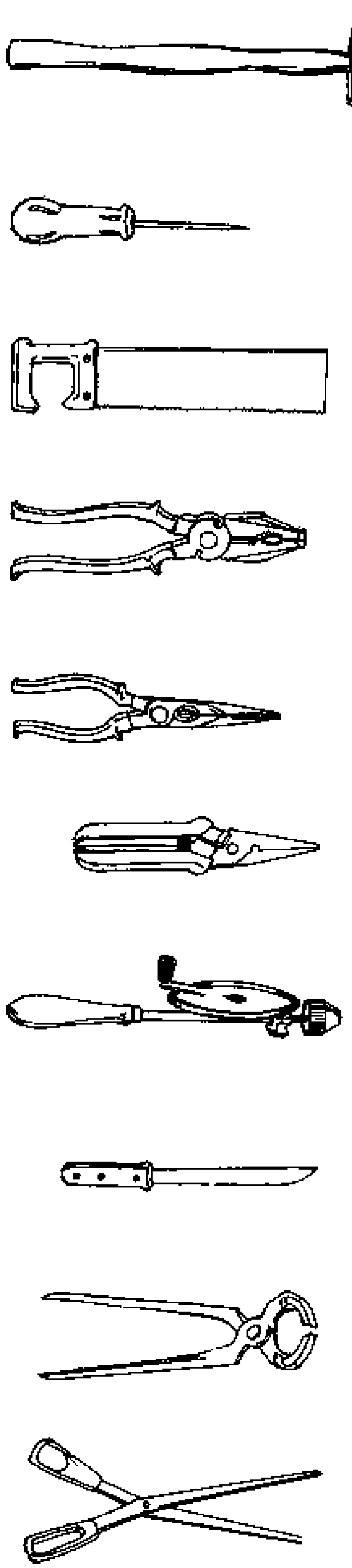

The ten items in the kit are

1. Hammer.
2. Puncher.
3. Hacksaw.
4. Combination pliers.
5. Long flat-nosed pliers.
6. Tin snips.
7. Hand drill or borer.
8. Sharp knife.
9. Pinchers for nail removal.
10. Scissors.

The Science Corner

P: Create a science corner in the classroom.

(a) Push a table into a corner of the classroom.

(b) Put up a few nails or strips of wood above the table from which to hang posters and specimens.

(c) Arrange displays in many different ways. Exhibitions of helpful plants, local wildlife, species collections etc..

(d) The corner could be the focus for science club activities.

I: More ideas on display and storage can be found on the following pages.

Display and Storage Ideas

1. Display Charts

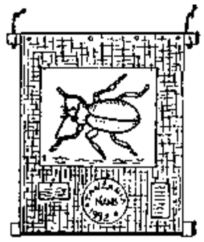

P: Make display charts from durable cement bags, cloth, cardboard boxes, sleeping mats or blankets. To help the chart hang flat and give stength and durability, attach sticks or strips of wood to the top and bottom of the chart. Attach pictures and posters with office pins, cactus needles, sharpened matchsticks or palm frond vanes (broom). Instead of a bottom stick, bottle tops can be used as weights

2. Plastic Bag Display

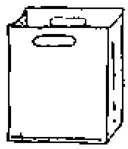

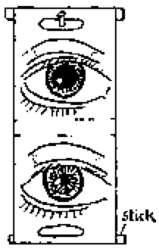

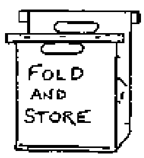

P: Open out a plastic carrier bag and tidy the edges. Add strengthening sticks at the top and bottom. Removable adhesive tape tabs can be used to attach display materials. Starch glued papers can be washed off this type of display chart. Permanent marker pens can produce a durable presentation (most come off with spirit).

3. Magnet Boards and Strips

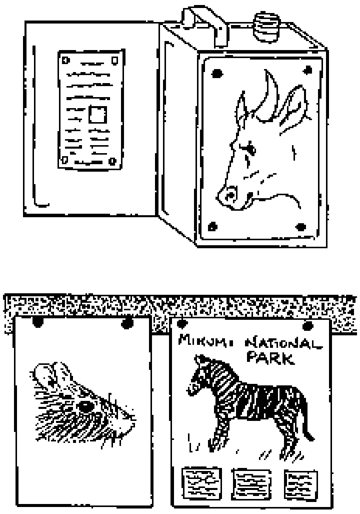

P: Use the thin sheet metal from a can or a disused car panel, steel shelf, filing cabinet, fridge door or even a sheet of corrugated iron (possibly flattened). You may paint the surface matt black to act as a blackboard. Magnetise small pieces of metal to attach pictures to the sheet. Magnets can be painted white making them less visible on white paper. Pictures that are used regularly can have small magnets permanently attached to their corners. A strip of metal from packing case strapping can be nailed above the blackboard (or display area). Magnets can then be used to hold large posters.

4. Free Standing Display Boards

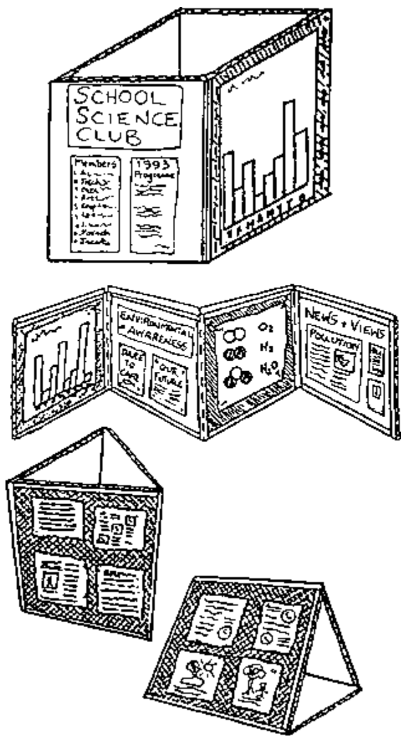

P: The display boards shown were all made from cardboard boxes.

a) The sides of a large upturned box can hold the information and pictures. Specimens can be placed on the box.

b) Cut down one side of the box and open out as shown. Cut off any flaps which don't help support.

c) Cover display boards with paper, cloth or paint for a more permanent appearance.

d) Wall pinboards for the science coner can be made from box cardboard.

5. Display Beams and Nails

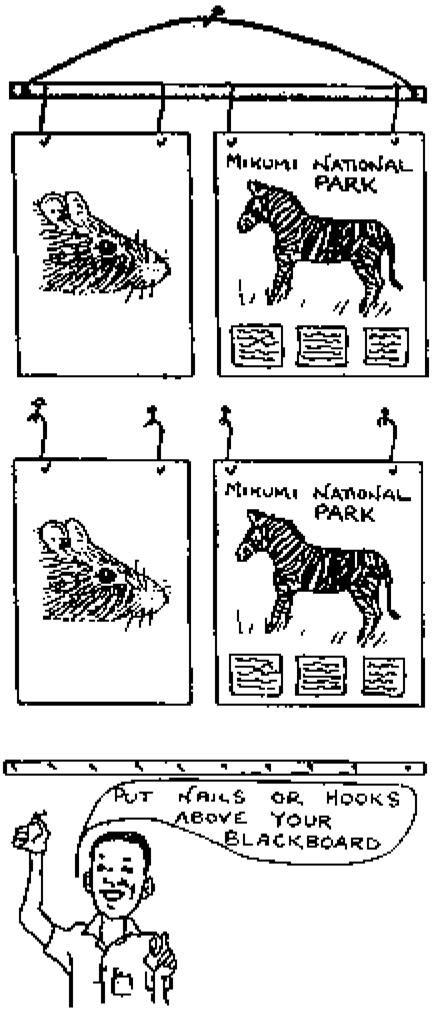

P: If a teacher regularly has more than one chart to display, a display beam or a series of nails above the blackboard will be useful. Wire hooks from the nails or the beam may help pictures hang flat.

6. Display Lines

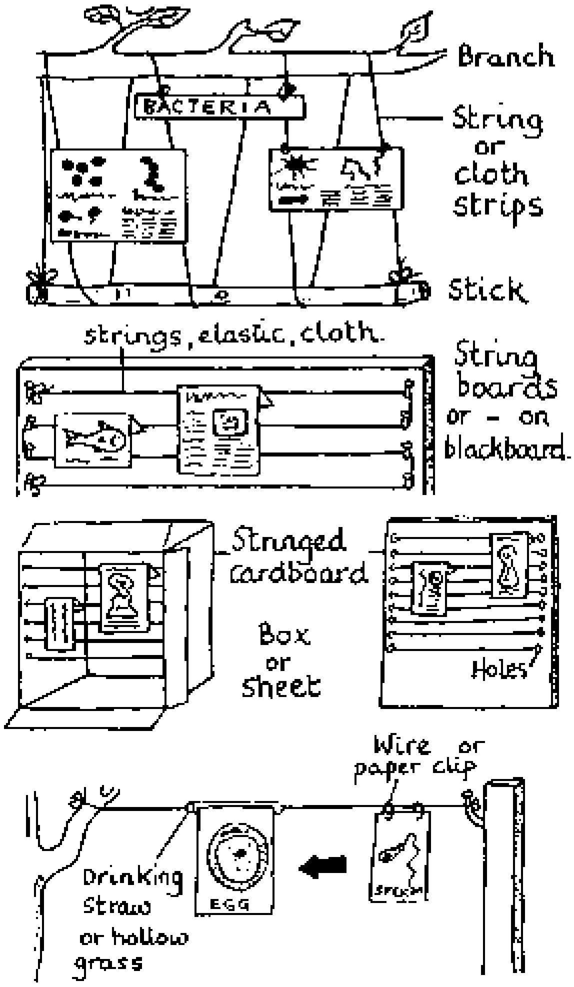

P: All the above examples use string, rope, wire, elastic bands or cloth strips.

a) The large branch acts as a weight to hold the sting tightly in placed. Hang, peg or pin display items to the lines.

b) Nails or hooks can be placed at the sides of even the widest blackboards. *Find the safest place on your board for nails.*

c) A stringed cardboard sheet or a stringed box are also very portable. After use store your display items in the box!

d) Movable mounts for display lines made from wires, paper clips, straws, ballpoint pen outer casings, hollow grasses, toilet roll inner tubes. Or make your own movable mounts from card or paper. Attach your pictures to the mounts with cellotape, paste etc..

7. Pin on Body Posters

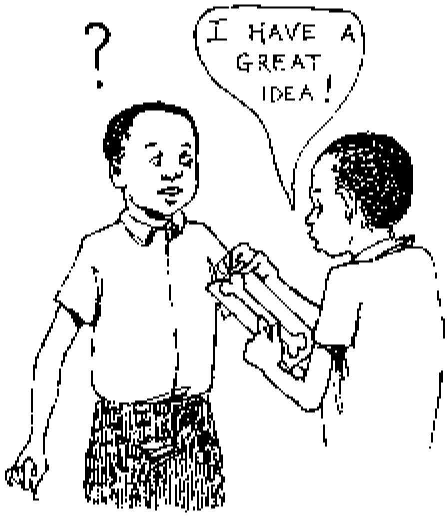

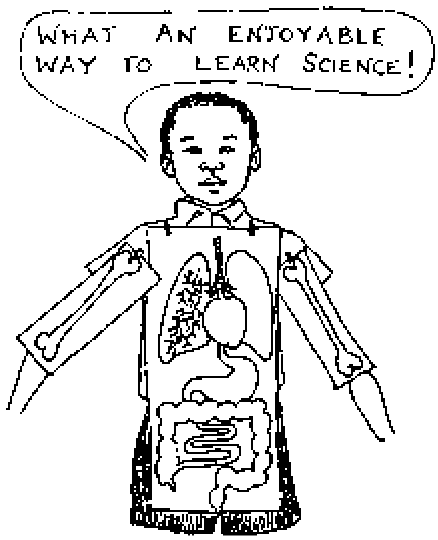

P: Draw diagrams of the internal body organs or bones onto paper or cloth. Pin or clothes peg these to clothing.

8. Transparent Overlays

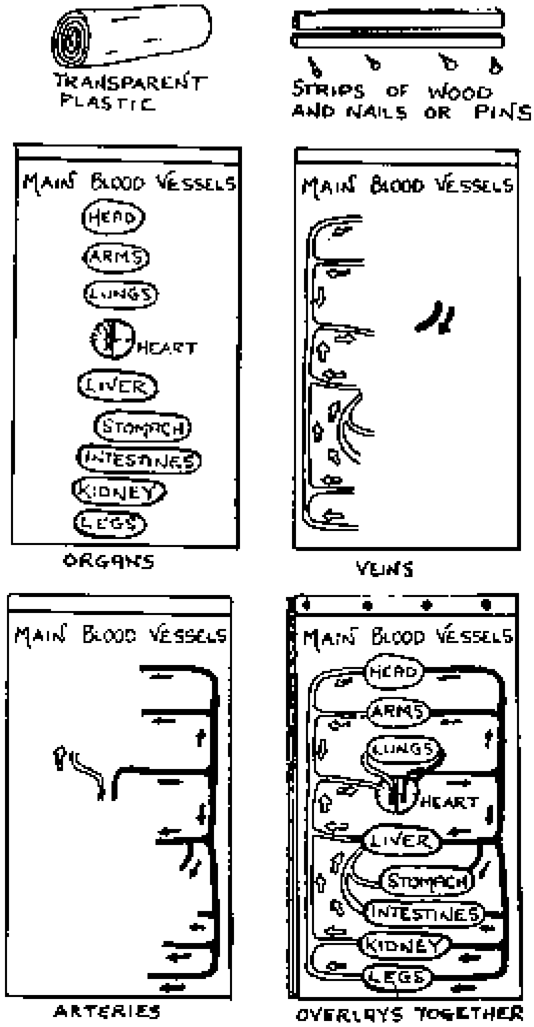

P: (a) Draw the base drawing on paper or board.

b) Place a sheet of transparent plastic over the base drawing. Write the labels to the drawing with permanent marker or biro.

c) Firmly attach the plastic sheet to the base drawing by pinning, pegging or clipping. A bar of wood at the top gives the overlay strength and stability.

d) Why not experiment with small transparent bags. Make an A4 or school writing book sized overlay chart. Try overlay displays of arteries and veins, nitrogen water and carbon cycles, maps.

9. Reversible Body Board

P: Cut a large template shape of the human body from cardboard, hardboard or plywood. Paint one side black, so that you can chalk on it. Varnish or paint the other side so that removable paper body organs and labels can be stuck on. The human body board can also be used as a template to draw accurate, identical human shapes side by side on the back board.

10. Blackboard and Book Templates

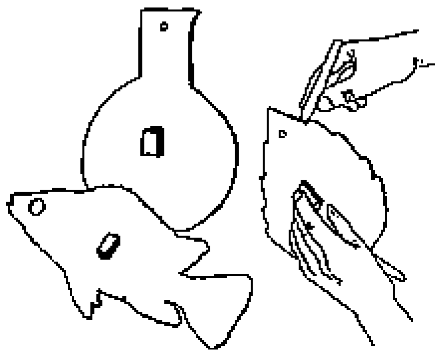

P: Cut templates from hardboard, plywood, cardboard or thick plastic. Collect basic and elaborate shapes for quick, uniform and accurate reproduction. Put a hole in the templates if they are to be hung up. You may wish to add a small piece of wood as a handle.

I: Make templates of body organs, types of leaf, animals or scientific equipment.

11. Blackboard and Book Stencils

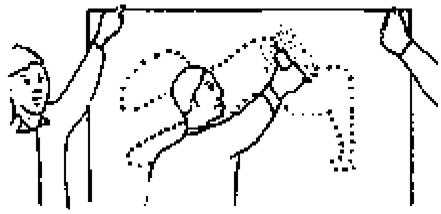

P: For large and small stencils. First draw the outline of your shape accurately to the correct size. Choose an appropriate material such as paper, box cardboard, hardboard, plywood or plastic. Put small guideline holes along the lines of your drawing. Hold or pin the stencil against the book, blackboard or wall. Dust over the holes with chalk for wall drawings. Remove the stencil and simply join the dots to reproduce human body shapes, maps, charts and other diagrams on a large scale.

12. Size and Storage

P: (a) If posters and charts are not stored safely they are often spoilt. Time and effort are wasted.

b) A school pupil's note book may be the answer. Easily available and teachers often have their lesson notes in similar sized books.

c) Remove the staples from a new note book and open out the double pages (often A4 in size).

d) Pupils can help design and illustrate school posters and charts.

e) Two, three or four double paged sheets can be joined together to make larger sized posters of different shapes.

f) To store fold along the original fold lines return inside the book cover and store flat under other similar sized books.

g) Build up an ever increasing library of different sized posters, which are all stored between note book covers of the same size.

13. Cups, Tins and Bottles

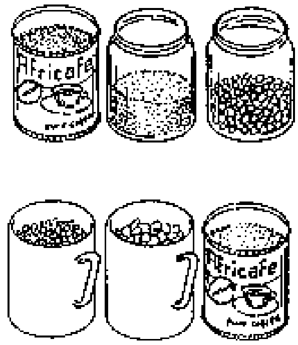

P: Cups, tins and bottles can also be used for display and storage purposes.

14. The Best Ideas

15. Picture and Card Boxes

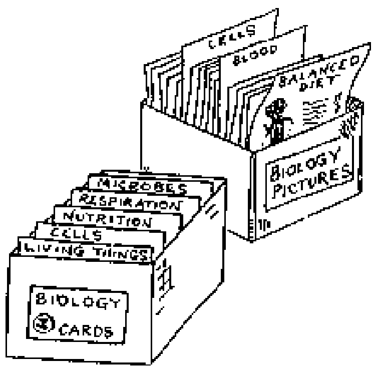

P: Pictures and cards can be stored in suitably sized boxes. Order them alphabetically or according to the syllabus. Compartments and dividers can be made from cardboard.

16. Storage Boxes

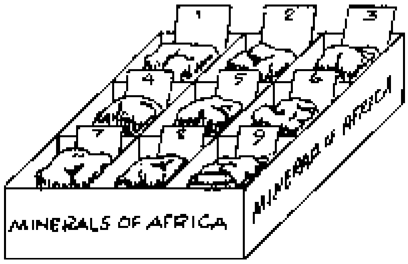

P: Samples can be sorted and stored in packaging boxes divided into several compartments as shown.

17. Matchbox Drawers

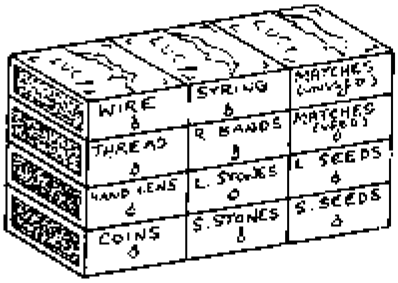

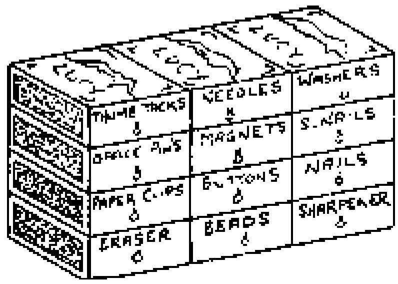

P: The matchbox drawers can be made by sticking matchboxes together as shown. Small pieces of string or wire can be used for draw handles.

18. Envelopes and Bags

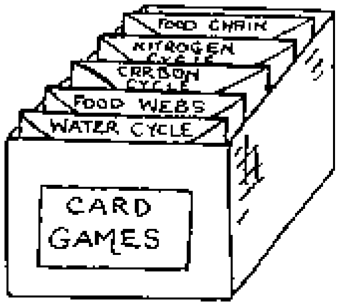

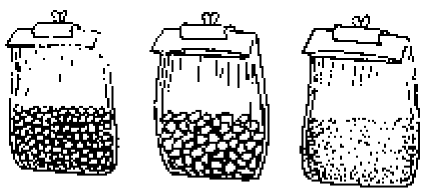

P: Envelopes and bags of all sizes can be used. Clearly label all containers.

Developing New Ideas

Try to develop the pupil's creativity by setting them simple tasks such as those shown above.

Begin by discussing a task with the whole class. Later pupils can work individually or in groups.

(a) This task starts with a bottle. The pupil or group can look through books and find a suitable use for it.

(b) This task involves solving the problem of showing how long a tape worm can be. The pupil is given additional help by being told to use a newspaper.

Paper Skeleton

What to Do

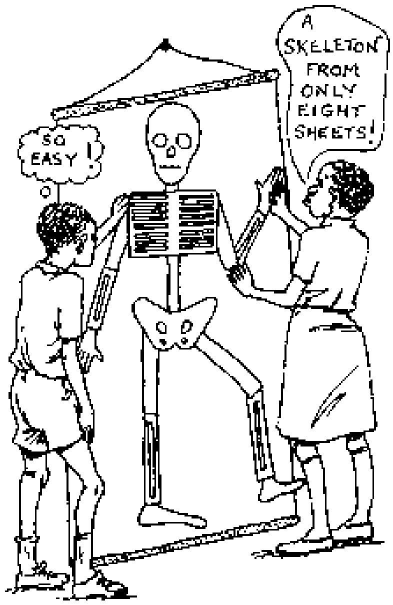

P: A simple paper skeleton can be cut from eight sheets of A4 sized paper (not foolscap!) or eight double pages of a student note book.

Draw fold and cut out as directed. As you gain experience you may be able to cut out the skeleton without drawing any guidelines!

- The bones of the feet and hands may be drawn on the paper shapes.
- The paper limb bones can be shaped to add greater realism.
- Pin or staple the pieces together or mount on a hanging display.

Skull and Pelvis
(Sheets one and two)

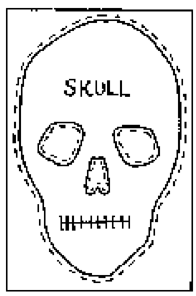

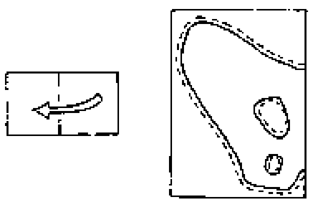

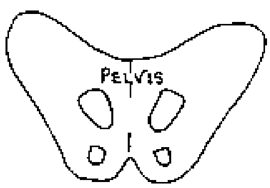

P: (a) Skull: After drawing, cut out along the lines. Or fold the sheet and cut out half the skull as shown. The mouth and teeth should be cut without removing any paper.

(b) Pelvis: Fold the sheet in half. Draw half the pelvis and cut out the basic shape when folded. The Pelvis looks like a butterfly.

Backbone and Limbs
(Sheets three, four and five)

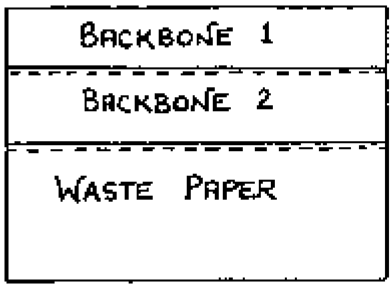

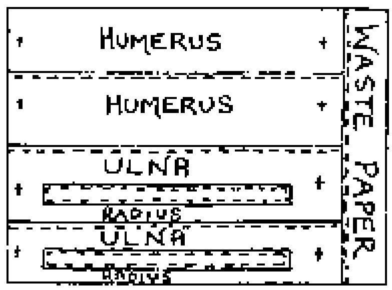

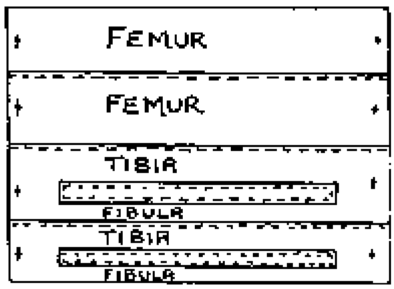

P: Place 3 sheets of paper together. Cut sheets length-ways into quarters as shown.

(a) Backbone: Two strips form the backbone.

(b) Upper limbs: Arms are shorter than legs, so, remove a piece of paper from the end of each upper limb strip.

(c) Lower limbs: The space between tibia and fibula and ulna and radius can be removed easily by folding and cutting as shown.

Rib Cage
(Sheet six)

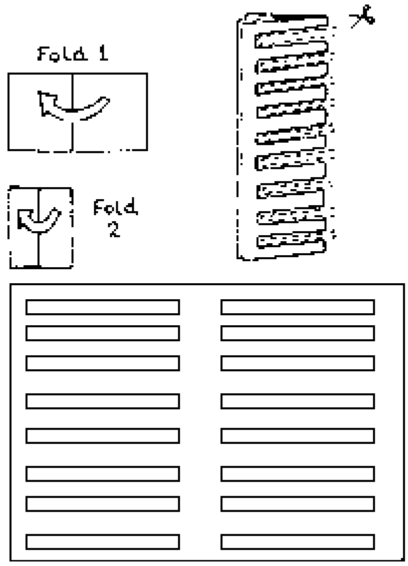

P: For an accurate number of ribs use a ruler to divide the sheet. If accuracy is not essential fold the paper twice and cut along dotted line (or cut along alternate page lines if your sheets are lined).

Hands and Feet
(Sheets seven and eight)

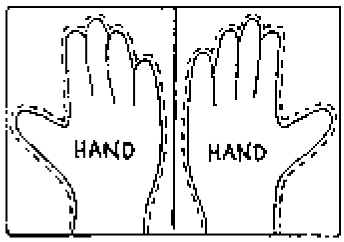

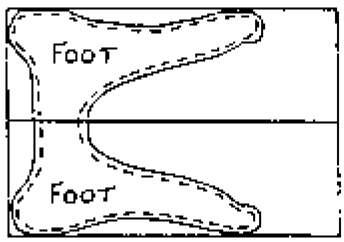

P: (a) Hands: Fold the sheet in half and draw round a hand. Then cut out. (b) Feet: Fold the sheet in half and draw the shape of a foot then cut out.

Aids

Prepared especially for this Sourcebook by Mr. M. Sawaya of the Inspectorate, Ministry of Education and Culture, Dar es Salaam.

Introduction

The purpose of this material is to provide a guide or basis for the school AIDS education program**.** On the grounds that the future of our nation and progress is based on the on going generation - the student. Hence the aim is to promote behaviour which will reduce transmission of HIV among young people.

The main mode of HIV transmission is through unprotected sexual intercourse. Open talk on sex is difficult in our society, thus making discussions on AIDS education a sensitive issue which has to touch on personal, religious cultural and moral perspectives. Initial and continuous communiction on all aspects of the education is expected and requires time, cooperation and participation of many people from the school, the home and the community.

Teacher who are going to do much of the education have to change their attitudes towards students. They have to treat students as individuals and with respect. They have to make students become comfortable and confident to talk about sexuality and related issues freely with them. It is advised that interpersonal relationship between teacher and student is fostered as it is the basis for preventive education and counselling.

The AIDS education provided in this material considers it as part of intergrated health education program ADDS or HIV infection is not treated as a set of isolated disease, but understanding it as disease that needs action to prevent or limit its development through learning and practising positive health behaviour, skills and attitudes. Likewise importance, is linked to Family life Education were self-esteem, respect for self and others, decision making nurturing relationships. That will help students to understand the immediate and long term benefits of abstaining from sexual activity.

AIDS - Current Information

This brief overview provides teachers with a general understanding of AIDS. It should be supplemented as needed with other texts on the subject. Knowledge about the disease and its effects on individuals is constantly being updated.

Teachers should periodically review and update this information to assure that is accurate.

Description and Cause of AIDS

- Acquited Immune Deficiency Syndrome (AIDS) is a disease caused by a virus that attacks the body's immune system, making infected people vulnerable to opportunistic infections, cancer, and neurological disorders.

- The AIDS virus (called Human Immunodeficiency Virus-HIV) primarily attacks certain white blood cells (called T-Lymphocytes or T-4 helper cells) that are part of the body's internal defense against disease. The virus may also attack the central nervous system.

- An infected person's immune system responds by developing antibodies to fight off the invading virus. It is these antibodies to HIV, and not the virus itself, that can be identified by a blood test before a person has any signs of illness. However, the body's ability to produce disease-fighting antibodies eventually becomes limited in HIV-infected persons as the virus reproduces and multiplies, killing the critical T-4 cells it has infected.

Clinical Manifestations

- HIV infection may lead to deasese which can take many forms. It ranges from the complete absence of symptoms to mild illness, to debilitating neurological disorders, and to fatal disease.

- The condition called AIDS represents a syndrome of late-stage diseases in which the immune system is unable to fight off other viruses, bacteria, protozoa, and fungi, resulting in infections and diseases that eventually cause the death o

- The condition called AIDS Related Complex (ARC) refers to individuals who have a suppressed immune system and symptoms of AIDS but no specific opportunistic infections. For an unknown percentage of individuals, ARC is a precursor to AIDS.

- The onset of symptoms associated with either ARC or AIDS may take from six months to five or more years to appear after the virus has entered the body. At this time most individuals exposed to HIV do not develop either ARC or AIDS, although they are carriers of the virus and are capable of infecting others.

- Symptoms related to ARC include:

  - loss of appetite
  - weight loss
  - fever
  - night sweats
  - skin, rashes
  - diarrhoea
  - tiredness
  - lack of resistance to infection
  - swollen lymph glands.

The symptoms are likely to be milder than those found in person with AIDS and generally are present in a cylic fashion with illness followed by periods of wellness.

- The symptoms that individuals with AIDS develop are related to the opportunistic diseases that have taken advantage of the compromised immune response due to HIV infection. These symptoms are usually persistent and difficult to treat, and they progressively debilitate the person to the point of death. They may include:

  - extreme tiredness, sometimes combined with headaches, dizziness, or lightheadedness

  - continued fever or night sweats

  - weight loss of more than 10 pounds that is not due to dieting or increased physical activity

  - swollen glands in the neck, armpits, or groin

  - purple or discoloured growths on the skin or the mucous membranes (inside the mouth, anus, or nasal passages)

  - heavy, continual dry cough that is not from smoking or that has lasted too long to be a cold or flu

  - continuing bouts of diarrhoea

  - thrush (a thick whitish coating on the tongue or in the throat), which may be accompanied by sore throat

- unexplained bleeding from any body opening or from growths on the skin or mucous membranes

- bruising more easily than usual

- progressive shortness of breath

- confusion, lethargy, forgetfulness, lack of coordination, general mental deterioration.

• Specific diseases that generally don't affect healthy adults are linled with HIV infection.

• The incubation period before any symptoms of HIV disease appear varies significantly from person to person. Many infected people develop symptoms within two years of exposure. Others, infected up to seven years ago, have not yet shown any signs of illness. Since AIDS is a new disease, only recognized in 1981, the maximum incubation period has not yet been identified. Extensive research is in progress to identify potential internal or external cofactors that may cause some infected people to become fatally ill, while others have milder symptoms or remain symptom-free.

Transmission

Unlike flu or measles, HIV is not transmitted through the air; it must get into the bloodstream to cause infection. For this reason, HIV-infected people do not pose a risk to others through any form of casual contact. There is no evidence that AIDS is transmitted through coughing, sneezing, food preparation, drinking fountains, toilet seats, being around an infected person on daily basis, or donating blood.

HIV is carried in blood, semen, vaginal secretions, and other body fluids including tears and saliva of an infected person. It is transmitted from one person to another by three routes: 1) through sexual intercourse (physical sexual contact between individuals that involves the genitalia of at least one peson-includes vaginal intercourse, oral intercourse, and anal intercourse), 2) through parenteral exposure to infected blood, and 3) from infected women to their infants during the perinatal period.

Sexual transmission of the AIDS virus occurs during intercourse. It is thought that it happens through abrasions or tiny, unfelt tears that may occur in delicate tissues. Such tissue breaks can allow infected semen, blood, or vaginal fluid to enter the bloodstream of a sex partner. Anal intercourse is most risky, since tissue tearing and bleeding are likely to occur.

Transmission through parenteral exposure to infected blood occurs in persons sharing contaminated needles, syringes, and works during intravenous (IV) drug use. Small, even invisible, particles of infected blood can remain in the drug paraphernalia and can be injected into the bloodstream of the next user.

The risk of AIDS transmission through blood transfusions has been almost eliminated since all blood banks began testing donated blood for antibodies to HIV in 1985. There may be some risk to receiving blood if it was too early for the virus to show up when donor blood was tested. Blood-donor testing has been so effective it has reduced the risk of AIDS from blood transfusion to one in a million. There is no risk of AIDS from donating blood; blood collection centers use new transfusion equipment for each donor.

All infected people, whether or not they have any symptoms, are presumed capable of transmitting the virus to others through blood-to-blood or semen-to-blood exchange, or through vaginal secretions-to-blood exchange.

An individual can be infected with the virus that causes AIDS without having symptoms of AIDS or appearing ill. Infected individuals without symptoms can transmit the infection to others. Once infected, a person is presumed infected for life, but actual symptoms may not develop for many years. A single exposure to the AIDS virus may result in infection.

How the virus is NOT known to be spread

- There is no evidence that the virus is spread through casual social contact (shaking hands, social kissing, coughing, sneezing; sharing swimming pools, bed linens, eating utensils, office equipment; being next to or served by an infected person in ordinary social contact). There is no reason to avoid an infected person in ordinary social contact.

- It is not spread by the process of giving blood; new transfusion equipment is used for each donor.

- HIV is not transmitted by insects.

- It is not spread by sexual intercourse between individuals who have maintained a sexual relationship exclusively with each other, assuming that they have not been infected through contaminated blood, blood factors, IV drug use, or a previous sexual partner.

Major Risk Factors

Persons at increased risk for being infected with the AIDS virus include:

- homosexual and bisexual men

- sex partners of IV drug abusers

- male or female prostitutes and their sex partners

- sex partners of infected persons

- all persons with haemophilia who received blood-clotting factor and transfusions prior to 1985

- Children born to infected mothers.

Prevention

There is no vaccine against AIDS or any treatment so far that can reverse AIDS damage to the immune system. People must learn how to protect themselves and their loved ones from this infection. It is essential that students gain knowledge and skills to protect themselves before they reach an age at which they might experiment with sex or illegal drugs. Following are some basic elements of AIDS information related to prevention.

How to prevent infection

- Infection through sexual contact can be avoided by practicing abstinence or having a mutually monogamous marriage/relatioship with no known risk factors in either partner. Young people can stay safe from AIDS by not having sex. They need to know it is all right to say NO. In addition to the risk of AIDS, there are other health reasons to postpone sex, including the risk of gonorrhea, syphilis, and herpes, and unplanned pregnancies.

- Do not use IV drugs; do not share needle or works. Young people can stay safe from AIDS by not using IV drugs. They need to know it is all right to say NO not only to IV drugs but to alcohol and drugs of any kind, as these impair judgment. In addition to the risk of AIDS, there are many other health reasons for abstaining from illegal drug use.

- If already sexually active:

    - Until you ask a lot of questions about his or her past sexual experience and drug use, don't have sex with anyone.

- The more people you have sex with, the greater the chance you may get infected, so don't have sex with multiple partners.

- With infected persons, using a condom during sex may help keep the virus from getting into your body. A condom is a thin rubber covering that is slipped over the penis before any sexual contact. (See condom)

- The chance of blood or semen entering your bloodstream is very high during anal sex, since it can cause tearing of delicate tissues, so avoid anal sex.

- Drugs and alcohol can lead you to do things you wouldn't do drug-free, so don't drink alcohol or use drugs of any kind.

If there is suspicion of infection

• Abstain from sexual intercourse.

• Seek counseling and AIDS virus antibody testing to be sure of infection status. Be aware that weeks to months may elapse from the time of infection to the time that antibodies to the AIDS virus appear in the blood. During this time persons may be infectious but the test may be negative.

• Obtain counseling and testing if pregnance is being considered.

Information which will emphasize the seriousness of the problem, yet reduce inappropriate fear

• AIDS is a national emergency requiring attention from all citizens.

• If people change their behaviours, the spread of the AIDS virus can be reduced.

• Blood for transfusion in Tanzania is screened for antibodies to the HIV and is now essentially safe, but some risks cannot be eliminated.

• Everyone who engages in high-risk behaviour is at risk for AIDS, regardless of age, race, or socioeconomic status.

Research and Treatment

Researchers in the Tanzania and other countries are working diligently to develop a vaccine to protect people from HIV. Vaccine development is made more difficult because the virus can alter its form in the human body. These is no cure for AIDS at this time, nor is there any treatment that can restore the function of the immune system. A number of antiviral drugs including AZT (Azidothymidine) are being tested on parients. While AZT has shown some promise in curbing the ability of the virus to reproduce itself inside human cells, the drug is highly toxic and has serious side effects. Some drugs used in cancer control, such as Interferon, are also being tried with AIDS patients.

Societal Issues

When a disease epidemic threatens society, the needs of all people must be considered: those already infected with the disease, those threatened by the disease, and those who will provide support for others.

In the past, once treatment or medical prevention for an epidemic infection was easily available, society sought to protect itself by providing information to as many people as possible through school-based courses and educational campaigns and, in some cases, by requiring mass strategies such as immunization (polio) or premarital blood tests (syphilis). As the number of AIDS cases mounts, this epidemic will have a significant and long-term impact on interpersonal and family relationships, medical care delivery, public policies, and health care resources. Because there is no available treatment, tremendous fears exist. Education must be used to curb those fears that can lead to discriminatory behaviour against people with AIDS. The rights of people with AIDS must be weighed and protected within the framework of disease prevention and with relation to the rights of those not infected.

Condom

A condom is a thin sheath that is placed over the erect penis to retain semen upon ejaculation. A condom is a safe and effective device in the prevention of pregnancy and somewhat effective in the prevention of sexually transmitted diseases, such as gonorrhoea, syphilis, and HIV. When properly used, a condom is theoretically 90 percent effective. However, it should be clear that, the use of condom is not an ABSOLUTE DEFENCE AGAINST HIV INFECTION. YET, YOU WILL BE RESPONSIBLE TO USE SKILL STUDIED TO PREVENT YOURSELF FROM HIV INFECTION.

NOT HAVING SEX IS ONE SURE WAY TO AVOID HIV INFECTION.

How to use the condom

Buy condoms that are stored out of the sun and not yet expired. MAKE SURE that the packet with the condom is intact. Do not use brittle, damaged condoms. Keep condoms in a cool place, away from the body's heat.

1. Wait for the penis to be fully erect before putting on the condom.

2. Take the condom out of the packet carefully so that it does not get torn by finger nails.

3. Pinch the end of the condom with the thumb and finger of one hand (do not let nails tear it!) The purpose is to remove air from the tip. Place the condom on tip of the penis

4. With the other handroll the condom all the way down to the base of the penis.

5. Now its' ready. Only use water-based lubricants. Lubricants containing oil such as grease, vaseline will damage condoms.

6. After ejaculating, take the penis out of the vagina before it goes soft, carefully holding the condom onto the penis so that no sperms spills. Direct the penis downwards and remove the condom gradually.

7. Dispose the condom in the latrine or in a way that children cannot play with it. Do not use condoms more than once.

Topic 1 Good Health

Objective

To enable students to:

- Understand the meaning of good health
- Understand the foundations of good management of life.

Teaching Media

Chart 1 A and 1 B behaviour -Relationship - Decision making

Teaching Approach

1. Show the students charts 1 A and 1 B

2. Ask the students the following questions

a. What do we see?
b. What are the reasons?
c. Does it happen here?
d. What should be done?

Let the students discuss and argue, let them give views and suggestions and encourage self-help solutions. Remember to control and direct the discussion in order to conclude that behaviour relationship and Decision making are foundations in managing good life.

During the discussion remember to point out that:

Health is a quality of life that includes one's physical, mental and social well being.

i) Good physical health in the condition of your body when it is not disrupted by any disease or pain.

ii) Mental health is the condition of one's mind and emotions.

iii) Social health is the way one-relates to other people.

iv) One's health involves a continual state of adjustment of the physical, mental and social well being to one's environment**.**

v) Any change in physical mental and social adjustment results in changes in one's quality of health.

vi) Normally success in life depends on good health which facilitates good life management leading to high quality of life.

vii) There are three important factors which influence the quality of one's life. These are (1) one's behaviour (2) one's relationship and (3) one's decision

viii) One's choice of behaviour and relationship affects one's total life. It is, therefore advisable that to ensure a high quality life are should avoid risk behaviour and risk situations and instead choose good behaviour and good relationship.

A

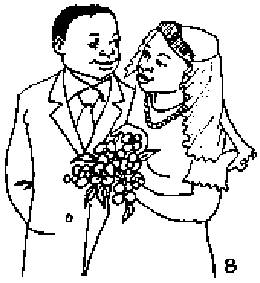

B

Topic 2 Diseases & Disorder

Objective:

To enable students to

- Understand the meaning of disease
- distinguish between communicable and noncommunicable disease
- Understand how communicable diseases are transmitted
- Describe diseases which can and cannot be treated
- Practice good health habits.

Teaching Approach

1. Ask students to brainstorm a list of diseases and disorders which they are familiar and list them on the blackboard.

2. From the list ask them the following questions.

a) Why do they think that it is a disease or disorder?

b) How does the disease spread from one person to another?

c) What causes the disease to spread?

d) What are the ways in which diseases are spread?

e) Are all diseases listed treatable?

f) How can you prevent spread of diseases?

g) What would you like to do in order to have a good life/health?

h) What would you like to see your friends do in order to have good health?

Topic 3 Chain of Infection

Objective

Students should be able to

- recognise how a disease is spread and how the spread of disease can be stopped by breaking the chain of infection

Teaching Approach

1. Show students chart entitled *chain of infection*

2. Ask students to explain the meaning of the words in the chain. Assist students of they are unable.

3. Explain what the chain of infection means (A continuous flow of a disease through different stages which can go on for along time unless it is broken at one place to stop the spread).

4. Ask students to think of a disease and ask them to identify factors involved in each stage of the chain.

5. Ask them to think at what point of the chain they can break so they can stop spread of the disease.

6. Conclude the lesson by emphasizing that by knowing the chain of infection we can stop spread of diseases. Also good health habits can break the chain **of** infection.

Chain of Infection

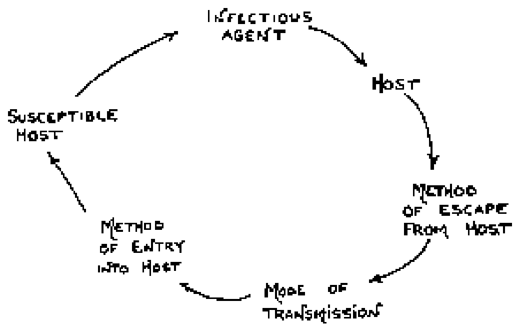

Breaking the Chain of infection for Measles

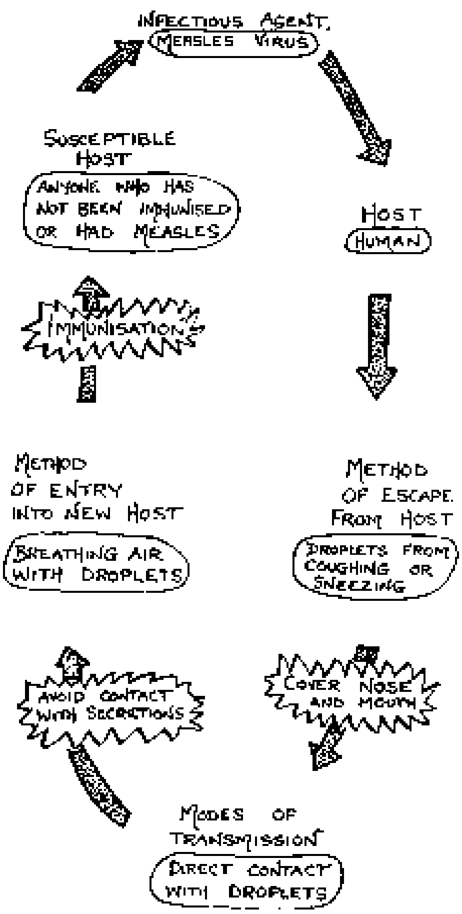

Topic 4 Sexually Transmitted Diseases

Objectives

To enable students

- explain the meaning of STDS
- describe different types of STDS
- explain how STDS can spread and be prevented
- discuss effects of STDS.

Teaching Media

Chart Sexually Transmitted Diseases

Teaching Approach

A1. Ask students to brainstorm the meaning, types mode of transmission and prevention of STDS.

B1 (a) Read out or distribute the Dear Biology Teacher letter to Students.

Dear Biology Teacher,
What is the HIV or (VVU) AIDS or (UKIMWI). What does it mean when someone has the HIV all news stories, and talk in town are confusing

(b) Ask students to brain storm. The definitions of HIV, AIDS VVU (Virusi vya UKIMWI) and UKIMWI. Guide students to connect definitions and correct misinformation and misconception.

(c) (i) Draw the chart of spectrum of HIV infection on the board or floor. (ii) Write the content of the table on pieces of cards or paper and instruct students to place in the correct position in the columns of the table. Ask students to explain the placements in position.

Chart Sexually Transmitted Diseases

Types	Symptoms	Effects
Gonorrhea	Man. Have a thick, greyish yellow plus like discharge from the penis. A burning sensation during urination symptoms appear 2-10 days after infection	• Sterility
	Women: Usually show no signs may have pus-like vaginal discharge, vaginal soreness painful urination and abdominal pain. Appears 2-10 days after infection	• Pelvic Inflammatory inflamatory disease (PID) may follow gonorrhoea if undetected for months
Syphillis	Painless sore on or in the genitals, anus mouth or throat appears 10 days to 3 weeks after infection. If left untreated sore goes away by itself skin rash appears on palms of hands and soles of feet at about 6 weeks	• Untreated syphillis causes loss of hair in patches. Can cause heart failure blindness and damage to brain and spinal cord and finally death. • Women may give birth to babies with syphillis.
Genital Herpes	Painful blister-like lesion on and around penis vagina and anus spread by virus	• Recurring outbreak of painful blisters.
Venereal Warts	Small painless outgrowth of skin in little clusters. In dry areas such as the penis, warts are small and hard. In moist areas like the vulva usually pink-red and soft. They may grow inside the cervix and rectum	• Untreated warts may increase in size and become incomfortable during intercourse • Warts on the cervix may increase risk for future cervical cancer in woman.
Chanchroid	Appears as deep soft sore with greenish yellow pus. Found on glans of penis, vulva and around the anus.	• Deformation of the genitals
Non - Gonococcal Infection (NGL)	Men: Burning on urination and discharge from the penis.	• Untreated may infect epididymus resulting in great pain and even infertility
Non - Gonococcal Urethritis (NGU) (Chlamydia)	Women: Many have cervical discharge or pain during menstruation. Perhaps no symptoms until PID begins.	• In women increase risk of Pelvic Inflammatory Diseases (PID) on severe cases infertility.
Human Immunodeficiency Virus (HIV) Infection/AIDS (Acquired Immune Deficiency Syndrone)	Most people may show no symptoms for many years but are still able to transmit HIV.	• HIV causes a spectrum of conditions from mild symptoms to severe immune deficiency state (AIDS). People with AIDS experience life threating infections, cancers leading to death.

Spectrum of HIV Infection

	Asymptomatic	AIDS Related Complex (ARC)	AIDS
External signs	• No symptoms • looks well	• Fever • Night sweats • Swollenlymph gland • Weight loss • Diarrhoea • Minor infections • Fatigue	• Cancer of the skin *(kaposis sacoma)* • Opportunistic infections T B, pneumonia • Neurological disorders.
Incubation	• Invasion of virus to 3 month	• Several months to 10 years	• Several months to 10 years
Internal level of Infection	• Antibodies are produced • Immune system remains intact • Positive antibodies test	• Antibodies produced • Immune system weakened • Positive antibody	• Immune system deficient • Positive antibody test
Possible to transmit HIV	• Yes	• Yes	• Yes

3. Ask students to brainstorm a list of how HIV infection is different from other STDS

Topic 5 Transmission and Non-transmission of HIV

Objectives

To enable students to

Understand ways HIV is transmitted
Understand ways HIV is not transmitted

Teaching Media

Chart No. 5A 5B 5C 5D Transmission of HIV.

Teaching Approach

A1. Show the students chart No. 5A, 5B, 5C, and 5D inturn.

A2. Follow question as those of Topic 1 No. 2

A3. During the discussion help students to realize that HIV is transmitted by

• Unprotected sexual intercourse -vaginal anal and oral

• Sharing contaminated blood through syringes, needles and razor blades.

• during pregnancy from an infected women to her unborn or newborn child.

• transfusion infected blood and blood products.

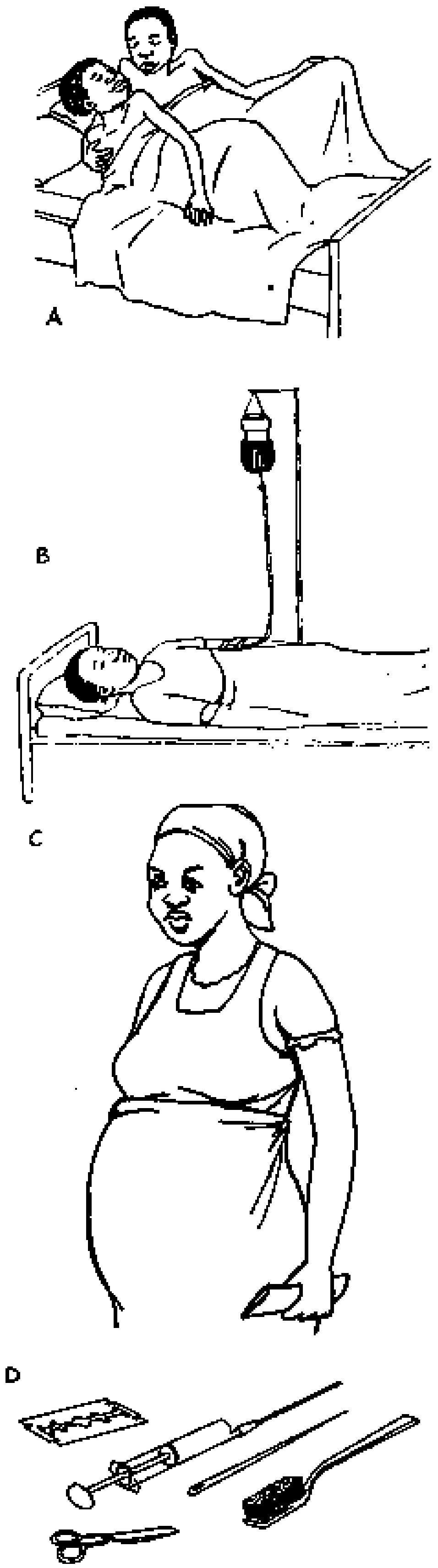

B1. Distribute or Read out to students THE AIDS MYTH-FACT STATEMENTS.

B2. Ask students to Agree or Disagree with each statement giving reasons.

B3. At the end of the lesson conclude by asking students to identify ways in which HIV is transmitted and not transmitted.

AIDS MYTH-FACT STATEMENTS

1. The HIV is only transmitted through infected semen and infected blood.

2. HIV is transmitted by hugging and kissing

3. People can look and feel healthy and still transmit HIV.

4. Women can transmit the HIV

5. Everyone who engages in sexual intercourse is at risk for AIDS if an infected parther is involved

6. A person can get AIDS from giving blood.

7. There is a vaccine to prevent AIDS.

8. Other sexually transmitted diseases increase the risk of HIV.

9. HIV can be transmitted through oral/genital sex.

10. Frequent sexual intercourse reduces risk of HIV infection.

11. You can get HIV infection or AIDS from your fellow student.

12. Mosquitoes, bedbugs and lice can transmit HIV.

13. A person with no symptoms can transmit HIV.

14. You can get infected by drinking from the same glass or eating from the same dishes as a person with HIV infection or AIDS.

15. Use of condom during sex reduce the risk of HIV infection

16. AIDS**,** itself, usually does not kill a person.

17. Everyone engaged in sexual intercourse can be at risk for AIDS.

18. You can tell by looking at someone that he/she has been infected.

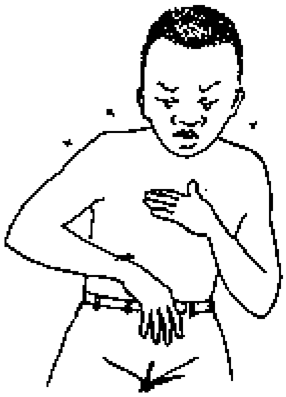

Topic 6 Risk Behaviour and Risk Situations

Objective:

To enable students to identify risk behaviour and risk situation that put them at risk of HIV and STD infection.

Teaching Media

Chart No. 6 Avoid Risk Behaviour and Risk Situation

Teaching Approach.

A.1. Show students chart no. 6A and 6B

A.2. Lead students to discus the charts so they could identify what a risk is, risk behaviour and risk situations. (You may use questions 1B in topic 5).

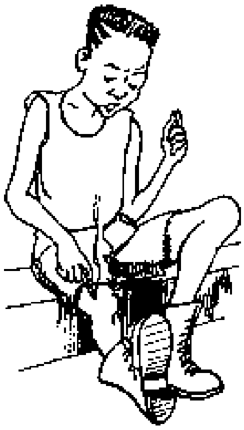

B.1. Write the following headings on the blackboard. No Risk Behaviour; Low Risk Behaviour; High Risk Behaviour.

B.2. Ask students to brainstorm behaviour in each category. Keep the group focused on behaviour that place them at risk for HIV infection.

B.3. Ask the students the following question:

a) What would help them to practice safe - behaviour
b) Do you think you are at risk.

A

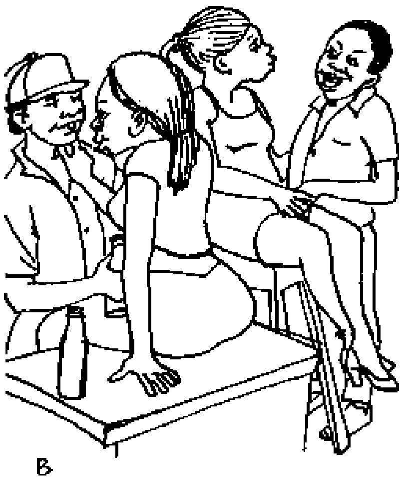

B

Topic 7 Who is at Risk of Getting HIV infection

Objective:

To enable Students to

- Understand that everybody is at risk of being infected.
- Recognize the spectrum of HIV infection
- Understand an outwardly healthly looking person can still infect others.

Teaching Media

Chart no. 7 who is at Risk of Getting AIDS

Teaching Approach:

A.1. Show the students chart no. 7

A.2. Ask students to brainstorm an identity of a person infected with HIV.

A.3. Carefully record their responses on board and discuss, leading them to correct information that everyday is at risk of being infected if involved in risk behaviour, every healthly looking person may have HIV infection but does not show.

B.1. Read or distribute a 'Dear Teacher" letter to the students

Dear Teacher,

What does AIDS have to do with me? None of my friends have AIDS. What's the big idea of telling us to abstrain from sex?

2. Refer students to the spectrum of HIV infection and risk behaviour and situations

3. Leasd students to compose a response to the letter. During the discussion allow students to bring up the following factors.

- How the HIV is transmitted.

- **How** one cannot tell by looking at someone that he/she has been infected.

- Blood test can determine presence of antibodies for HIV but not for the disease.

- Where an individual can get a blood test if there is a suspicion of infection

- How one can develop ARC and AIDS

- The there are numerous other diseases associated with AIDS for which there is no cure.

- And many more things

Complete the lesson by making students know and decide What a realist adolescent should know and Why?

Topic 8 Prevention of HIV Infection

Objectives

To enable students to identify ways of preventing HIV infection

Teaching Approach

1. Ask students to brainstorm a list of ways in which HIV infection may be prevented from spread by

a) Sexual intercourse
b) Bipod transfusion
c) Sharing of piercing instruments like, syringes, blades, and knives
d) mother to child

2. Run over the list explaining each suggestion clearly. Remember to put more emphasis on sexual intercourse. The major mode of transmission of HIV. In your discussion note the following:

a) Sexual Abstinence (Not having sexual intercourse) advantages of abstinence

i) free from pregnancy and sexually transmitted diseases
ii) free from use of contraceptives
iii) free from pressure to marry before your are ready
iv) free from abortion
v) free from guilt, doubt, dissappointment worry and rejection
vi) free to be in control of your life
vii) free to develop a respect for self viii) free to enjoy being a teenager.

b) Safer sex. (Sexual intercourse that limits exchange of body fluids)

i) protective *sexual intercourse* by proper use of condom

ii) non penetrative or *sexual outercourse* e.g. masturbation, hugging, massage, kissing.

c) Stable faithful relationship with uninfected person is safest.

d) Seek early treatment for diseases such as hookworm or malaria which may cause anaemia. Treatment of diseases and eating wall balanced food restores blood volume, and avoids the necessary blood transfusion.

e) Medical personnel can help to prevent HIV infection by using injection or immunising instruments which are sterilized. They should also use new or sterilized skin piercing or piercing instruments.

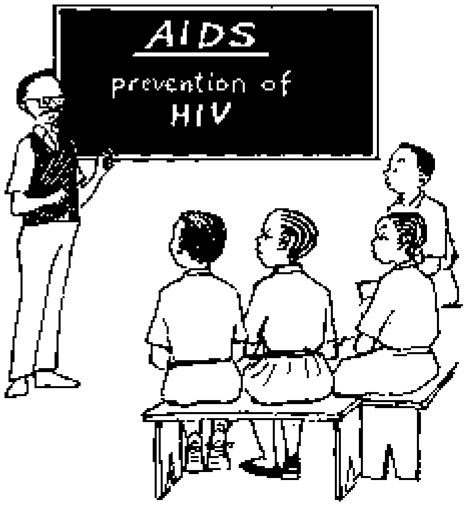

Topic 9 Caring for People with AIDS

Objective:

To enable students to

a) appreciate the need to take care of persons with AIDS
b) realize the importance of counseling persons with AIDS and their familier
c) understand the danger of discriminating against persons with AIDS.

Teaching Approach

1. Show the students chart no. 9 entitled Caring for people with AIDS and lead the discussion by asking them the following questions:

a) What do we see?
b) What are the reasons?
c) Does it happen here?
d) What should be done?

Lead the students to appreciate the message/statements on the charts. Also let them know that:

a) Everyone is at risk of being infected by HIV.

b) You get infected with HIV once and it has no cure or vaccine.

c) Since they know how HIV is not transmitted there is no need to be afraid of caring for a person with AIDS.

d) People with AIDS are in most case angry with themselves for getting infected. They feel lonely because they are isolated; and friends accuse them of their behaviour which has result to their present state. People with AIDS are usually in great fear of death. Most PWA's end up having no financial resources because of spending much on the untreated disease they are miserable.

e) A responsible approach is not to condemn PWA's. They have the right to love and participate with other people in the society.

f) The responsibility of cash one of us is towards people with AIDS is to support them psychologically giving them information on AIDS current development and offer them material support.

2. Dilemma. Read of distribute the passage below to students

Ben has recently learned he is seropositive for HIV. He goes to a party where he is attracted to Joyce the attraction is matual, and Joyce invites Ben to go outside for kissing and sexual intercourse

Lead a discussion by using the questions

a) What should Ben do?

b) What would it be like to tell someone you are seropositive for HIV. What would be your response?

c) What activities would Ben and Joyce safely engage in?

d) What difference would it make if Ben does not tell Joyce?

Topic 10 Making Responsible Decision

Objective

Students should be able to make informed responsible decision to risk behaviour and situations.

Teaching Aids

Chart no. 10 making decisions.

10A picture showing a responsible decision.

10B picture showning an irresponsible decision.

Teaching Approaches

A.1. Show students chart no. 10A and later no. 10B.

A.2. For each chart ask the students the following questions.

a) What do one see?
b) What are the reasons?
c) Does it happen here?
d) What should be done?

Note: Let students discuss and give views on the two decisions shown in the charts. However, facilitate the students to realize what is a responsible and responsible decision.

3. Explain to the students the responsible decision-making approach steps.

B. Case Study

1. Provide students with the following case study

'We have been going together for two years My boy/girlfriend wants me to sleep with him/her. I love him/her, and I don't want to lose him/her, but I'm not sure this is what I want to do'.

2. Direct students into the process of making informed decision in the case of the boy and girl.

Decision Making Steps

1. Identify the situation.

2. Identify the different decisions that can resolve the situation. (There may be more than one way to resolve a situation).

3. Ask questions about each possible decision to resolve. (There are six question that can be used to identify decisions that lead to responsible actions. the question will not necessarily apply to all situations.

i) Would the result of my decision be morally acceptable?

ii) Would the result of my decision follow my parent's or guardian's guidelines?

iii) Would the result of my decision show respect for myself and others?

iv) Would the result of my decision be healthful?

v) Would the result of my decision be safe?

vi) Would the result of my decision be legal?

4. After you have applied the given question to each possible decision, make a responsible decision and ACT ON IT.

5. Evaluate your decision review your decision to confirm that it was a responsible decision.

Topic 11 Refusal Skills to Reinforce Decision

Objective

Students should be able to use refusal skills to reinforce decision.

Teaching Aids

Chart no. 11 Refusal Skills (11A Boy showing refusal action 11B Girl showing refusal action)

Teaching Approach:

A.1. Show the students chart no. 11A and 11B

A.2. Ask students the following question

a) What do we see?
b) What are the reasons?
c) Does it happen here
d) What should be done?

Let the students discuss and argue, give views and suggestions and encourage self help solutions. Remember to familitate the discassion to include the following refusal skills:

a) Give reason why saying 'NO' is a responsible choice. For example 'I do not want to harm my heath'.

Say 'NO' and keep repeating it, Don't offer reasons or excuses for saying 'NO'.

b) Use your behaviour to show you meaning of what you say: For example stand upright and look firmly at your partner. Avoid being alone with someone who tries to convince you to be sexually active.

c) Use self control and stick to your decision

d) Move out of the situation or refuse to discuss the matter further. 'I am leaving now'

e) Encourage your partner or friend to choose healthful and responsible behaviour or suggest alternatives say, "Instead why don't we......".

Topic 12 The Impact of HIV Infection and AIDS

Objective

To enable students to increase their level of awareness on how HIV infection and AIDS can affect their lives socially economically and psychologically.

Teaching Approach:

1. a) Ask students to imagine they are living a year from how.

b) Ask them to consider the following question:

i) With whom will they be living?

ii) Who will their friends be?

iii) Will they have a special friend? Why?

iv) What will they do for recreation and pleasure? Will they try drinking, using drugs, smoking loitering stealing or engaging in sexual activities?

vi) How might HIV/AIDS enter their lives, or the lives of their families, neighbours or friends if they are engaged in the above activites?

vi) Will they know and be prepared to help anyone who is HIV positive or has AIDS?

c) Stop the exercise. Discuss their responses.

2. Futurity Cycle

Let the students consider a family whose parents or guardiain have been diagnosed HIV positive. Help students develop a futurity cycle depicting the consequences (social, economical, psychological outcomes resulting from this situation using the following diagram

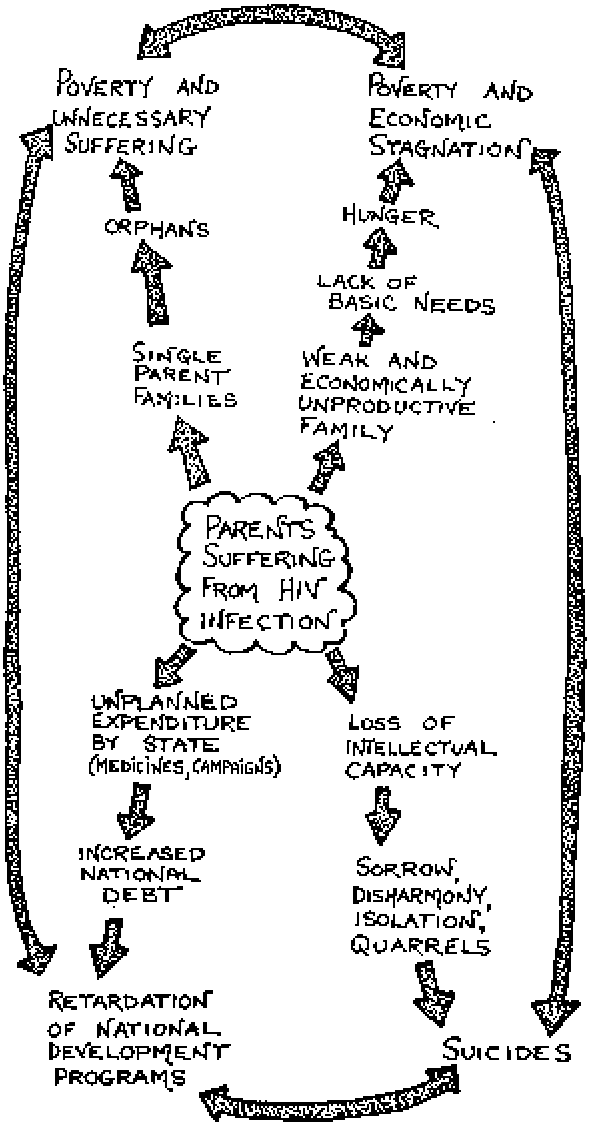

Topic 13 Values Clarification of Issues Surrounding Sexuality and AIDS

Objective

To enable students to explore their personal values and become comfortable with listerning and understanding opinions different from their own.

Teaching approach

1. Explain to the students that in this activity they will be asked to express their feelings about particular values.

2. Designate three areas of the room to be called. 'Agree' 'Unsure' 'Disagree'.

3. Explain to the students that you are going to read several value statements; as you read each one you may want them to think very carefully about how they feel about each statement and then move to the section of the room depending on whether they 'agree' 'disagree' or 'unsure'.

4. Let them know that you will be asking for volunteers to describe their feelings about the statement

5. Emphasize that there are no right or wrong answers only opinions. Everyone has the right to express his/her opinion. Let them know they can change their voting at anytime.

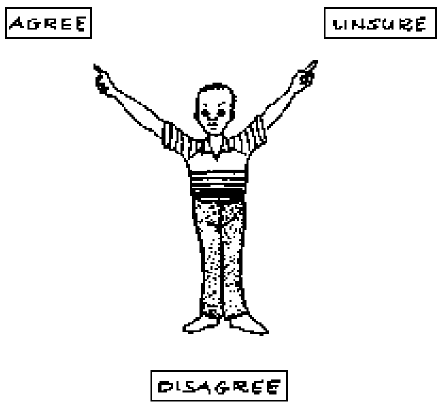

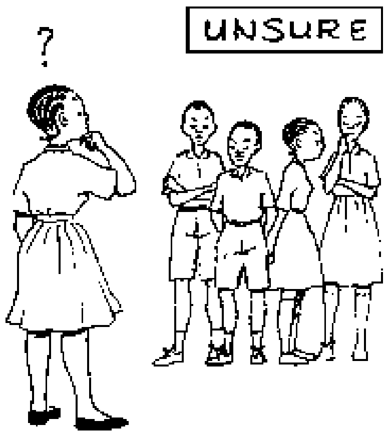

Here is a list of value statements to read or choose from.

1. The AIDS epidemic has changed my life.

2. I am worried that, I or someone I love, will get AIDS.

3. I think sexual intercourse is appropriate only between married people.

4. I think that prostitutes (teenagers and sugardaddies) are responsible for the AIDS epidemic

5. I think it should be a crime for anyone infected with HIV to have sexual intercourse without telling their partner

6. I think that it is important to educate youth about low-risk alternatives condoms abstinence to sexual intercourse

7. Believing that condoms are 100 percent effective in preventing HIV infection gives people a false sense of security

8. Parents should not teach their children about AIDS and Sexuality.

Vocabulary List

Abstinence - No sexual intercourse, no IV drug use.

Acquired Immune Deficiency Syndrome - A disease caused by a virus which breaks down the body's immune system, making it vulnerable to opportunitic infections and cancer.

Addiction - Habitual use of a substance (like IV drugs) and inability of stop the craving for such a substance.

AIDS - The initials for the disease "Acquired Immune Deficiency Syndrome".

A disease caused by a virus which breaks down the body's immune system, making it vulnerable to opportunistic infections and cancer.

AIDS virus (HIV) test - A test used to detect antibodies against the AIDS virus (HIV) in blood samples. This test does not detect AIDS but rather the presence of the virus that can cause AIDS.

Antibodies - Substances in the blood produced by the body's immune system to fight against invading organisms.

Antigen - A substance that stimulates the production of antibodies.

ARC - AIDS Related Complex. A condition caused by the HIV in which an individual tests positive for HIV and has a specific set of clinical symptoms that are often less severe than those of AIDS.

Asymptomatic - No apparent symptoms of illness even though the individual tests positive for HIV.

Birth - The act or process of being born.

Bisexual - A person who has sexual preference for both males and females.

Blood transfer - The act of transmitting blood from one individual to another. In pregnancy it would occur between the mother and unborn baby through maternal/fetal circulation.

Carrier - A person who harbors a specific infectious agent, in the absence of clinical disease, and serves as a potential source of infection.

Casual contact - The usual daily interaction between people at work, in school, or in social situations.

Communicable disease - A disease that is transmitted directly or indirectly from one person to another. It is caused by bacteria, viruses, and other organisms or their toxic products.

Condom - A sheath used to cover the penis. Condoms come in a variety of materials. Rubber is a material that prevents penetration of HIV and does not break as easily as other substances. Used during sexual intercourse to prevent the transmission of semen, blood, or vaginal secretions and to protect against the AIDS virus (HIV).

Contaminated needle/works - A needle or works that has been previously used, with infected blood or blood particles left on the needle/works to be passed on to the next user.

Droplet spray - Organisms that are projected in droplets of water when an infected person coughs or sneezes and are received in the eyes, nose, or mouth of a nearby person.

Fetus - Unborn baby developing in the uterus after the end of the second month of pregnancy. Before eight weeks it is called an embryo.

Heterosexual - A person who has sexual preference for a person of the opposite sex.

HIV - The Human Immunodeficiency Virus. It causes AIDS by attacking the body's immune system, making infected people vulnerable to fatal infections, cancer, and neurological disorders.

Homosexual - A person in whom an infectious agent can live and multiply.

Illegal drugs - Drugs that are not obtained through legal means or for legitimate medical purposes.

Immune system - A body system that helped fight off invading organisms and disease.

Immunization - A method of producing resistance to an infectious disease, usually by vaccination or inoculation.

Incubation period - The time interval between invasion by an infectious agent and appearance of first sign or symptom of the disease in question.

Infected partner - Individual in a sexual relationship who is carrying the AIDS virus (HIV) in his/her body.

Infectious agent - An organism (virus, bacterium, etc.) that is capable of producing infection or infectious disease.

Intravenous drugs - Drugs that are administered through a needle and syringe and injected directly into a vein and thus into the bloodstream.

Kaposti's sarcoma - A cancer or tumor of the blood and/or lymphatic vessel walls. It usually appears as blue-violet to brownish skin blotches or bumps.

Lymphocyte - A type of white blood cell that is produced in the bone marrow. Some of these cells migrate to the thymus, where they develop as T-cells. Other lymphocytes that mature in the bone marrow or in organs other than the thymus are called B-cells. The B-cells manufacture antibodies, and the T-cells regulate antibody production. In healthy people about 60 percent of circulating lymphocytes are helper T-cells. With AIDS, only about two percent of the lymphocytes are helper T-cells. With fewer helper T-cells, the body is unable to recognize and attack invading organisms.

Method of entry - Manner in which organisms enter the host's body:

Method of escape - Manner in which organisms leave the host's body.

Mode of transmission - Manner in which an infectious agent is transmitted from one person to another.

Needles and works - Devices used to prepare and inject drugs directly into the vein and thus into the bloodstream.

Noncommunicable disease - A disease that is *not* transmitted from person to person.

Opportunistic infection - An infection caused by a microorganism that rarely causes disease in persons with a normal immune system.

Organism - Any living thing, such as a virus, a bacterium, etc.

Pneumcystic carinii pneumonia - The most common life-threatening opportunistic infection diagnosed in AIDS patients. It is caused by a parasite, Pneumocystic carinii.

Pregnancy - The condition of having a developing embryo or fetus in the body.

Risk factor - Activity that makes a person more susceptible or more likely to be exposed to the AIDS virus (HIV).

Semen - The fluid that is expelled from the penis during sexual activity.

Sexual abstinence - Not having sexual intercourse with another person.

Sexual intercourse - Physical sexual contact between individuals that involves the genitalia of at least one person. Includes vaginal intercourse, oral intercourse, and anal intercourse.

Spectrum - A range of factors associated with HIV infection or a range outcomes.

Susceptible host - A person not possessing sufficient resistance against a particular organism to prevent contracting the infection when exposed to the organism.

T-cells - A class of lymphocytes that play a major role in carrying out the activities of the immune system. Some T- cells are called helper T-cells.

Transmission - The passing of infectious agents from one person to another.

Uterus (womb) - Hollow, muscular, pear-shaped organ in females in which the unborn baby develops.

Vaginal secretions - Fluids within the vaginal tract.

Virus - A microscopic organism that cause infections.

Questionnaire about Source Book
for Teaching Biology to Beginners with Locally
Available Materials

(Please tick the relevant answers)

Teacher ☐ O'Level student ☐

Other occupation...

Male ☐ Female ☐ Domicile village ☐ Town ☐

Country..

I have used the Biology Source book for private studies ☐
in my occupation ☐

I like..
....

I dislike..
....

The book helped me..
....

I think the following parts should be omitted..
....

I would like to see the following topics added to the book when a new edition is made...............
....

Further comments:..
....

Please send to: **Mzumbe Book Project,**
P.O. Box 19 Mzumbe,
Morogoro - Tanzania.

This book.....

• emphasises the "learning by doing" approach to understanding Biology.

• describes how to perform quick and simple experiments using locally available materials.

• explains how to make some basic items of equipment.

• includes many ideas for low cost but effective visual aids.

• provides an easy to understand source of ideas to encourage enquiry and investigation.

• attempts to make teachers and students aware of the resources available in their environment, which may be used for the teaching and learning of the science of Biology.

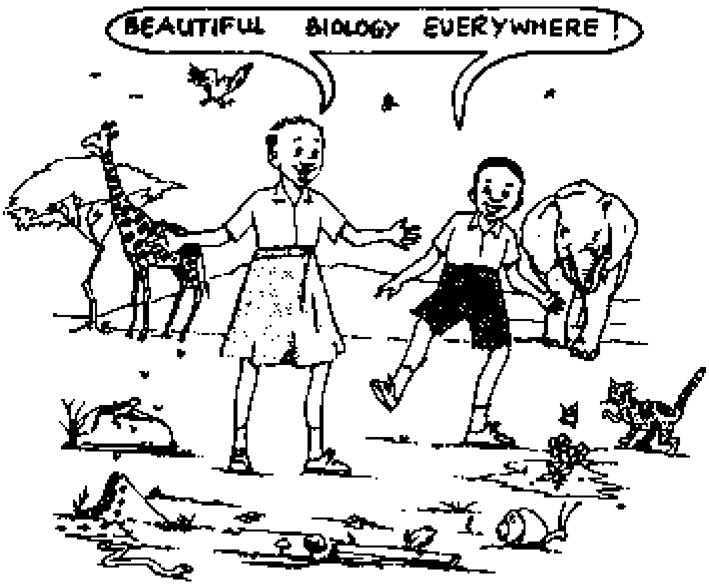

ISBN 9987 552 12 9

Low priced edition

Mzumbe Book Project
P.O. Box 19 MZUMBE, MOROGORO - TANZANIA

CODE/OCED

Sponsored by:
Canadian Organization for Development through Education

Division 404
Private Sector Promotion and Vocational Training

Vocational Training

Curriculum Development and Revision

Integrating Business Topics into Industrial-Technical Training

Guideline for Implementation

Deutsche Gesellschaft für
Technische Zusammenarbeit (GTZ) GmbH

Titelgestaltung:
Vladimir Samsonov, Moskau
Bildtitel: „?", 1993, Ausschnitt

Cover designed by:
Vladimir Samsonov, Moscow
Title: "?", 1993 Detail

Dessin de couverture:
Vladimir Samsonov, Moscou
Titre: «?», 1993, détail

Diseño de la portada:
Vladimir Samsonov, Moscú
Título de la obra: "?", 1993, detalle

Division 404
Private Sector Promotion and Vocational Training

Vocational Training

Curriculum Development and Revision

Integrating Business Topics into Industrial-Technical Training

Guideline for Implementation

Eschborn 1997

Published by:
Deutsche Gesellschaft für
Technische Zusammenarbeit (GTZ) GmbH
Postfach 5180, D-65726 Eschborn
Internet: http://www.gtz.de
Abteilung 404 - Wirtschaftsberatung und Berufliche Bildung
Tel: (+49) 6196-79 1463; Fax: (+49) 6196-79 7181

Responsible: Dr. Klaus Przyklenk

Responsible for contents: Elisabeth Bähr, Dr. Raimund Dröge, Berend Neumann, Dr. Gerd Neumann

Editor: Axel Becker

Foreword

When the interested layperson hears development cooperation and vocational training assistance, s/he immediately thinks of dual training, vocational schools, or craftsman and technician training. Long-term successes here at home, these approaches developed into major exports of German bilateral cooperation over decades.

Anyone following developments will know that the industrial-technical training of skilled labour in many partner countries has reached its limits on the labour market. Young people and adults - the bulk of the population - in most cases lack economic and social access to such long-term training. Pressure on national governments has resulted in more discriminating demand for cooperation approaches. Needs have diversified due to a broader range of target groups. Alongside customized short-term term training, further training and retraining, German vocational training assistance now includes another facet: support for industrial-technical long-term training. This overlaps with business promotion. System development support is not just a catchword; it has become a vital activity as an almost inevitable result of this spectrum of advisory services.

This has its implications for industrial-technical training assistance, whose scope as a one-dimensional promotion measure is narrowly confined by the low level of industrialization, division of labour and undiversified enterprise structures in the various economies. Production and technical services in themselves do not generate income unless there is a real or prospective market for them. Training must cater for this.

Supplementing industrial-technical learning with business-administrative and managerial skills and knowledge brings it more in tune with reality. This is a two-fold gain for purposive training: it meets the demands of companies for broadly qualified skilled manpower to cope with increasingly complex tasks, and it affords trainees greater opportunities to market their competence as wage-earners or as self-employed. This is where the present guide comes in. It helps to give shape to training processes. That is all it can and should do. This is why the authors see the guide more as a set of signposts pointing thinking processes in the right direction. It is not a set of rules and regulations.

The more firmly business topics are integrated into industrial-technical training, the more adaptable training design will have to be. We are not promising to make your work simpler or ease your workload, but we hope this guide will make your curricular work more effective.

We thank all GTZ field and head office staff involved in preparing this guide, especially the vocational training projects in Uganda, India and Chile. Let us hope that in the second phase the guide will be put to widespread use. A monitored introduction is already planned for Albania, India and Zimbabwe.

Elisabeth Bähr
"National Vocational Training and Development Programme"
Harare/Zimbabwe
January 1997

Dr Klaus Przyklenk
Division 4040
Private Sector Promotion and Vocational Training

Eschborn, January 1997

Curriculum Development and Revision

Integrating Business Topics into Industrial-Technical Training

Table of Contents

Figure 1: The 'long march' of the planners

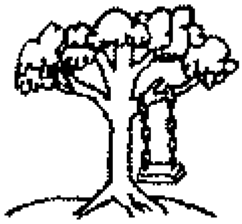

1
The local expert wants a plain, project-friendly facility.

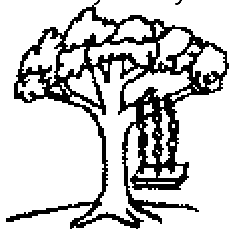

2
The expert team makes a proposal and starts planning.

3
Applying regulations on contracts for work and labour, Head Office amends the draft again.

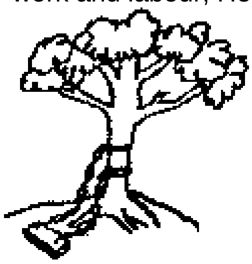

4
GTZ Head Office is happy to take up this suggestion and approaches an external team of experts..

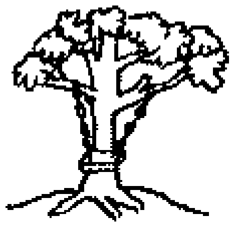

5
The team prepares a draft that meets all the curricular provisions and it is approved internally after objections have been registered.

6
After all bureaucratic hurdles have been overcome, the plan is implemented by experienced practicians.

Part I: Introduction

Foreword

'Lonely Decision' is a film about a plane hijacking. The plane is boarded in the air with the help of a new special aircraft. All the terrorists are killed but just before the arch baddie dies he shoots the pilots of the Jumbo jet. One member of the anti-terror squad that has stormed the plane is now faced with the job of landing it. He has only flown a couple of hours in a sports plane and has never sat in a Jumbo cockpit. A stewardess assists him in this difficult situation. He is sitting there rather helpless amidst hundreds of instruments, switches and levers. Whatever he cautiously does after switching off the automatic pilot there is a warning signal. The two find the pilot manual and start looking for key terms. For example, they find an entry under landing speed, which means nothing to them because they do not know the weight of the plane or many other specifications so they try out a makeshift mean figure. Hardly have they finished the procedure when the warning signal returns. Our heroes get increasingly nervous. Whenever he is in danger of being paralyzed by the host of options in the manual and the danger involved, our learner pilot repeats to himself that he has to think it out on his own, that it is nothing but a plane. With this mental approach to the challenge facing him, he finally manages to land the plane well enough to save the lives of all the passengers. This was his aim and not to make a perfect landing by the book.

How to read this guide

When reading, you should not confine your attention to the checklists at the beginning of the guide, but should read it all to gain an overall picture and general grasp of the task. When you go on to implement the project you can then reach for the guide and look up individual points again.

These two ways of reading - all the way through first and then later a selection - pose very disparate demands on the presentation of a text. A text conceived for the selective use of information requires far more subdivisions into individual units, but this partitioning impedes the flow of text which the reader needs to obtain an overall picture. We have therefore decided to precede the text with lists of the major points, but these will only be useful as part of the overall context. The checklists cannot be understood properly without the following explanatory text. So it is important that you do not stay put at the checklists, but make sense of each point and interpret it in the light of the subsequent text. To help you do this we have collated the headings in the checklists and the explanatory text and given references to the more extensive text in the checklist heading.

The first question: Why should industrial-technical qualifications be supplemented by business skills and knowledge?

Field experience repeatedly gained in local industrial-technical training projects indicates the need to supplement technical training with business topics. Precedence for industrial-technical training is not in dispute, because there is an urgent need in many emerging economies and newly industrialized countries to improve technical and craft skills to raise the quality of products and sell them on the market. Now there is no question that gearing training closely to industrial-technical skilled worker qualifications poses problems where the percentage of jobs in the modern industrial sector of emerging economies and newly industrialized countries is declining and in a substantial number of countries the number of jobs are diminishing in absolute terms as well.

The division of labour in large-scale enterprises between technical and business activities does not exist in most micro and small enterprises of emerging economies and newly industrialized countries either in the formal or informal sector. Technical and business work here are still interlocked. This also holds for the craft occupations. Here too business topics must be added to technical training particularly when training also has the labour market policy aim of self-employment in addition to wage-earning. The basic model of skilled worker training must therefore be enlarged to impart qualifications for activities below the level of highly developed industrial structures and complex technical services.

Having recognized the need to supplement training so far with business topics, there are a number of ways to design business training:

1. We can try to use or develop a concept that applies for all industrial-technical training projects (worldwide) alike.

2. We can take over a special concept already devised for a certain project for our own project.

3. We can develop our own model.

Though common, the first two approaches do not make sense in our view. We are very much in favour of the third option, developing our own training concepts tailored to our own needs.

Let us first explain briefly why we reject the first two options. We argue that the differences between various projects in different countries are too great, because the kind and scope of business activities are subject to a host of specific determinants. The particular shape these take affects the business operations and related training requirements. These determinants include operating and organizational requirements, sector-specific features, regional, national and economic conditions, technical, economic and social progress and cultural characteristics. Under these circumstances the everyday economic process of production and exchange of goods and services takes place in disparate ways and at various levels. So there cannot be one single, global, general approach to business training. Such a concept can only contain commonplace generalities.

The second approach above, though, fails also due to these great differences or put differently, the specifics of the given training setting. A special concept developed for a certain vocational training project cannot simply be transplanted to another.

Whereas a global concept is over-concerned with generalities, a special concept is often wholly confined to solving specific problems without systematically addressing and applying the underlying patterns of business activity to enable their application to other business operations (internal transfer within the project) or other projects (external transfer outside the project).

The global concept is over-concerned with generalities while the individual concept usually ignores them outright.

So we say the requisite training concept should not simply be 'imported' but developed locally. To do this we need to combine knowledge on general business activities, such as '*for business activities it is important to learn to calculate*' with special elements, such as '*it is important for a future electrician in Uganda to be able to cost and price electrical equipment*'. We obtain knowledge about general business activities from the subject (=business) didactic analysis; knowledge about the specifics of the local training setting, however, is furnished by the project's curricular analysis.

The business topics important for the individual project (training electricians in a production school in Uganda with additional business qualifications) are identified by the curricular analysis. The specific business skills and knowledge to be imparted (costing an electric cooker) is based on a general business calculation and learning model, the basic pattern. This dovetails special business, occupational topics for business training of electricians in

Uganda with general business subject matter (basic patterns of business activity).

Through curricular analysis (For what activities are the electricians being trained, what additional business knowledge do they need?), the general business topics which come under business didactics (bookkeeping, costing and pricing, sales estimates, efficient production) are reshaped and adjusted to the training process. Curricular analysis thus holds precedence over the business didactic analysis. We therefore stress the specifics of the individual project and not generalities in business didactics. This is why the business didactic analysis is included as a major component in curriculum development, but does not override or precede it.

Summarizing the above, we arrive at three basic curricular and business didactic principles.

Principle 1: Simplicity

Our guide is premised on practical business requirements in 'unsophisticated' production facilities and technical services. For production sequences or technical services in micro-, small- and medium-sized enterprises under formal and informal economic conditions we can identify concomitant business procedures and patterns. If necessary, the business patterns identified can then be developed into more complex work sequences and related training concepts (from basic costing to cost planning, from single-entry to double-entry bookkeeping). In the project's curricular analysis (such as activities, qualification, learning goal and learning organization analysis) the typical patterns of business activity and business topics are assembled into training modules whose scope and level are tailored to the needs and abilities of the trainees in the project.

Principle 2: Priority of industrial-technical training

The priority of industrial-technical training is a basic precondition for our proposals on how to integrate business training modules. Training topics and organization in the industrial-technical sector decide where and when the business training topics enter into the picture. If at all, changes in industrial-technical training will only be considered where they are conducive to better business training (e.g. integrating a project to link technical and business activities).

When integrating business training topics we concentrate on the interfaces (a) between production and business administration, i.e. on the most economic, systematic and coordinated in-company interaction between technical and business processes and (b) between input market, production and sales market, i.e. on how best to organize external relations (maximize efficiency of the company's marketing organization and market relations).

Principle 3: Realistic and practical training

To be (a) realistic, the supplementary business training must be linked to real-life technical training (e.g. workshop training, production school). As topics in industrial-technical training, preplanning, producing/providing, checking and utilizing products and repair services should also be dealt with at major interfaces in business terms (drawing on the dual nature of stockkeeping, procurement and work processes, which all have a technical and economic/business side). This linkup makes business decisions and routines easier to grasp.

Based on a) (linkup with the technical side), we make sure the training is b) practical by gearing it to typical business operations with an in-company or market relevance (calculating supply prices, costing, maximizing inventory efficiency, sounding out sales prospects). Via job orders and case studies relating to market trends and company organization we can help avoid an over-concentration on teacher-centred teaching methods and the associated over-abstract business economics terminology/classifications.

Part II: Checklists

Principles (in detail: pp. 9-10)

1. There is no single global model for training, as economic/business conditions differ throughout the world.

2. Universal approaches must be treated with scepticism. The same holds for test approaches adopted in some project. Even if they were successful, this success may be only be local.

3. The curricular analysis helps us identify the major business topics. It links general subject didactics with local requirements.

4. This linkup, adjustment is crucial. The guide provides details on how you to go about it.

5. Principle 1: simplicity in the guide means the concern to pinpoint, basic elementary patterns of activity.

6. Principle 2: priority of industrial-technical training means providing technicians with useful business know-how and not to train them to become businessmen as well.

7. Principle 3: realistic and practical training means avoiding over-concentration on teacher-centred teaching methods and the associated over-abstract business economics terminology/classifications.

Planning to measure (in detail: pp. 31-33)

1. Do not be a perfectionist, be more of an opportunist. Always try to achieve a reasonable degree of complexity - not too complicated and not too simple.

2. Remember the constraints on your curricular work (lack of time, material, information, staff and money). It is no good pretending. Learn to accept the 'bottleneck'.

3. Do not be frustrated by the discrepancy you have discovered between what should be and what is. You can widen the 'bottleneck'

4. There is no 'Royal Path'. There are always several options. Do not be deterred by this; view it as an opportunity.

5. In this kind of project there are no straight roads. What appear to be setbacks can be useful, even necessary.

Basic curricular questions (in detail: pp. 28-31)

1. What are the prospective target groups from industrial-technical training for supplementary business training?

2. What should the aims and learning goals of supplementary business training be?

3. How can we select business topics to achieve selected learning goals?

4. How can we organize business topics for effective training (teaching)?

5. How do we judge the effectiveness of topics?

6. How can we organize curricular work?

7. How can we test the effectiveness of curricular work?

Planning fields in the curriculum (in detail: pp. 33-36)

1. Throughout the whole project you have to organize and check, i.e. demarcate and redefine the parameters of the curriculum.

2. You must acquaint yourself in detail with project conditions, i.e. demarcate the condition fields of the curriculum.

3. You must take definite decisions on the structure and schedule of the curriculum, i.e. demarcate the decision fields of the curriculum.

1st planning step: Organizing curricular work and basic decision (in detail: pp. 36-41)

Project management tasks

1. Select the members of the curricular work group.

2. Define the basics of curricular work.

3. Define the goals of curricular work.

4. Draw up a schedule: it should be a little more detailed for the initial phases and quite rough for subsequent tasks.

5. Place the schedule where all experts and people involved can see it. It should cover tasks and personnel as well as times.

6. Determine staff available.

7. Determine finances.

8. Draft a budget to account in particular for the costs of staff and business learning aids.

9. Document curricular work: prepare for the working sessions in writing and record the outcome.

10. Allocate tasks.

What you can draw on

1. The principles of open-ended curriculum development

2. The knowledge of industrial-technical experts, the teachers and trainers in the project

3. The knowledge of the external local personnel for business training (fee-contracted staff), counterparts;

4. Outcome of a joint, cooperative understanding on the basic goals of the business sub-curriculum.

What not to do

1. Do not simply take over topics from existing business text books, learning aids or general curricula.

2. Even when you seek advice from businessmen and economics/business teachers - including local ones - they will usually cite topics from the above sources.

What to do

1. Answer the basic question: Is a supplementary business training necessary or not? Answer honestly!

2. If the basic decision is 'yes': go through the individual training courses.

3. Make a bold provisional outline of the rough fields of business activity.

4. Record the decisions.

5. Add an expert for business work and learning to the CWG.

6. Our suggestion: first develop and try out <u>one</u> business training or teaching unit.

Selecting the expert

When selecting the expert take account of the following:

- The expert should ideally be a planner and developer with practical business and teaching experience (in that order).

- The expert should come from the country (Europeans or national) and have practical experience in the economic life of the country.

- It is better when the expert does not come from a management school, because these experts often lack practical experience and subscribe to an abstract business economics theory.

- The expert should be willing to cooperate and communicate.

- The expert should look at the workshops and the technical training courses.

2nd planning step: Occupational and activities analysis (in detail: pp. 42-51)

Tasks

1. Determine the general economic and economic policy conditions.

2. Analyze the labour market conditions and trends.

3. Cater for the social and cultural conditions.

4. Describe the specifics of the regional project environment.

5. Describe the in-company organizational pattern and market relations of enterprises that might employ qualified trainees.

6. Discuss self-employment prospects for qualified trainees.

7. Describe the industrial-technical activity profiles including the associated business requirements both as a company and independent activity (in-company and market activities).

What you can draw on

1. Conduct an expert and company survey yourself.

2. Conduct qualitative studies in companies and analyze workplaces.

3. Interview prospective employers on the labour market.

4. Locate company interfaces between technical and business tasks.

5. Have a look at national studies and publications, sector studies, statistical material, project appraisal and implementation studies, national development planning policy, regional and branch studies.

6. Vet information from external sources.

3rd planning step: Qualification analysis (in detail: pp. 51-59)

The qualification analysis is based on the activities analysis and describes the related qualification requirements and need for improvement.

Tasks

1. Classify in the analysis the qualification requirements in specific knowledge, abilities, skills and attitudes to meet the current requirements and make improvements at certain points.

2. Try to identify development trends and the attendant technical and business innovations and assign to them the requisite qualifications.

What you can draw on

1. Single case studies
2. Market studies
3. Experience of project executing agencies
4. Discussions with

   - Education experts
   - Representatives of companies
   - Representatives of associations
   - Existing training institutions

What not to do in the qualification analysis:

1. Try not to assign individual, isolated activity elements to respective isolated qualification aspects.

2. Proceed from broader activity blocs. Group instead of separating.

3. Do not go into too much detail. Do not plan to perfection.

What to do in the qualification analysis:

1. Concentrate on the interfaces specified (procurement, stockkeeping, production/repair, sales, management).

2. Assign the qualifications to the activity blocs entailed (work activities, workplaces, work sequences).

3. Define basic qualifications as the outcome of an empirical qualification analysis.

4. Define surplus qualifications as the outcome of a normative qualification analysis.

5. Link the two forms of qualification analysis to be able to determine the necessary changes in existing working relations.

6. Draw up qualification lists as a starting point for further planning steps.

7. Supplement the function-oriented qualification lists with function-tied qualification lists to arrive at qualification elements.

4th planning step: Preconditions analysis (in detail: pp. 59-63)

In the preconditions analysis we examine the preconditions for the supplementary business training: the way the industrial-technical training project is organized and the prior education of the trainees.

Tasks

1. Check the prior education of the prospective or current trainees in the industrial-technical projects with a view to the requisite qualification and identify what basic decisions on the level of supplementary business training need to be made as a result.

2. Draw up an inventory of your own project.

3. Judge the level of national business training.

4. Select suitable training courses and interfaces for supplementary business training.

5. Estimate the duration and scope of the supplementary training.

6. Divide possible training and further training units.

7. Estimate additional staff (curriculum planning and implementation) and financial requirements - resource audit.

8. Determine the prior education of the industrial-technical trainees and gauge the basic implications for the level of supplementary business training.

9. Take basic decisions and record these.

Priority of industrial-technical project organization

1. The organizational form predetermines the options available for the integrated supplementary business training.

2. Generally these are broader in a production school than in a 'normal' full-time vocational training school.

3. Check whether the following possible advantages of production school training for integrating business topics apply to your project:

- Is the training geared to procurement and sales?
- Is it geared to prescribed national standards (technical, business, management)?
- Is it geared to activities in relation to work and learning objects?
- Does it adopt a holistic approach to technical, business and management activities?
- Is it geared to a rational organization of work and marketing and does it provide criteria for selecting suitable activity blocs and topics?
- Is work linked to learning?
- Does the training foster self-reliance in the trainees (elements of self-organization of work and learning)?

Principles for supplementary business training

1. The business training should be conducted as a project.

2. Set up the necessary organizational conditions for this.

3. Determine project elements suitable for combining with the supplementary business training.

4. The systematic imparting of business knowledge and patterns of activity should in turn be geared to this.

5. On the other hand, the search for suitable intersections for supplementary business training and its combination with the industrial-technical project should not be confined to productive or project-type training phases.

6. All phases of the industrial-technical training should be examined to see if they can be combined with supplementary business training, including workshop and theory courses.

The role of government-approved occupations in the project

1. The curricular work group (CWG) must take an occupational view of business training and its scope in the project, i.e. keep in line with the respective industrial-technical government-approved occupations.

2. The CWG may have to consider whether certain basic business knowledge must be imparted in an inter-occupational course before specializing by occupation.

3. Determine the tasks for the industrial-technical trainers involved.

4. The business experts must allocate tasks within their team (e.g. a European businessman with country experience and two local teachers).

What to do:

1. Specify the basic decisions taken when organizing curricular work.

2. Estimate the total need for supplementary training.

3. Locate areas where you can start developing modules.

4. Do not proceed from higher-level business decisions in management; address the individual functional areas instead.

5. Assess the abilities of the local teachers. If these for example cling to certain theoretical knowledge, the CWG must make added efforts to impart the goals of the curriculum.

6. Assess the prior education of the trainees.

- A good general education is more conducive to grasping more abstract business topics.

- Where the level of prior education is low, it is all the more important to gear business training to industrial-technical practice and conduct it in a straightforward way in line with the project.

5th planning step: Business didactics analysis (in detail: pp. 63-72)

Brief outline

Based on the qualification and preconditions analysis for supplementary business training, in the business didactics analysis we examine business didactics proposals. Ask yourself the following questions:

1. What basic patterns of business activity and learning can be considered for the supplementary training?

2. What economics/business text books and learning aids are suitable as a starting point for designing the supplementary business training?

3. What major business didactics criteria are applied to business learning?

What to do

- Assign business knowledge and patterns of activity to typical levels of activity:

1. Level of activity: business routines
2. Level of activity: ongoing business decisions
3. Level of activity: directing decisions
4. Level of activity: constitutive decisions

- Make sure you keep to the sequence specified in the previous planning steps: scale of enterprise - industrial-technical training -technical/business interfaces - requisite business activities -business training topics.

The specifics of business activity and the danger of thoughtless adoption of business teaching conventions

1. By its nature business activity is intangible.

2. Business teaching is in danger of getting stuck in abstractions, over-generalizing and losing touch with practical objects and activities in the industrial-technical sector.

3. Business training, then, must always refer back to practical activities in the real world.

Possible construction faults in business training modules

1. Beware of the dense, abstraction in business studies, of clinging to theory.

2. Reread the sections in the guide on construction faults and judge the learning material with these yardsticks in mind.

Fault 1: Using lists of all kinds when planning topic routes
Fault 2: Methodological 'window dressing'
Fault 3: Too little account of learners' experience
Fault 4: Insufficient economic/business expertise

Linking curricular decisions from the activities, qualification and preconditions analyses with business didactics

Explanation, bridge or introduction?

List of knowledge blocs for the training modules

- Basic bookkeeping
- Finance and financial planning
- Inventory and inventory planning
- Basic commercial correspondence
- Market surveillance and advertizing
- Production planning, product development, product improvement and quality assurance
- Locational planning
- Procurement and procurement planning
- Basic business organization and management
- Costing, pricing, calculation
- Basic contractual, employment and tax law

6th planning step: Goal analysis fin detail; pp. 72-81)

Brief outline

In this step the CWG proceeds from the rough topics developed, supplements them if necessary as it goes along and assigns to them learning goals to determine the level of learning processes. For this it draws on the findings of the business didactics analysis.

Tasks

- Link the activities and qualification analysis with the preconditions analysis (compare the entry qualifications of trainees with the final qualifications of the supplementary business training for selected occupational activities) by translating the basic decisions taken there into rough learning goals for the supplementary business training.

- Link the rough learning goals with the rough topics from the business didactics analysis and vet the selection.

• Link learning level with topics.

• Define prior learning and knowledge structures for designing the business training modules.

What you can draw on

1. The findings of the learning goal analysis in intellectual, motivational and psychomotor learning

2. The matrix for the learning goal analysis

3. The linkup of rough learning goals and rough topics (combination of curricular and business didactics analysis)

4. Demarcation of the training modules as framework modules

5. List of 'givens'

Berend: Diese Liste muß noch mal überarbeitet werden

What to watch out for

Do not detach the rough learning goals and rough topics from the order established so far.

When developing rough learning goals and topics steer your course along the following lines:

• The curricular goal, to define the kind and scope of business topics more exactly in line with the technical training

• The scale of enterprise, to pinpoint key topics for the areas

• The two levels of activity: (a) the business routines and (b) ongoing business decisions, to locate the level of learning processes and route the two module runs

Learning goal decisions

What learning goals are:

Learning goals are statements on the level of learning processes we are aiming at. They are and remain important prior information on what awaits the learners, but they also provide guidelines for the learning aids developer and assigning topics and tests. So they are major reference points.

• Define neither too many nor too few learning goals. In both cases they forfeit their guiding function.

• Do not for example draw up an over-elaborate skill hierarchy.

• Word learning goals in everyday language.

• Do not draw up abstract systems of learning goals; always keep an eye on their relevance to occupational activities.

7th planning step: Learning organization analysis (in detail: pp. 82-89)

The learning organization analysis brings together the findings of the goal analysis and the business didactics analysis.

Tasks

1. Define the detailed learning goals and detail the learning topics. The rough analysis moves on to the detailed analysis.

2. Decide how to organize the business training in combination with the technical training.

3. Decide how to refine the goals and topics specified in the modular system (training plan).

The role of the modular schedule

1. The training module profiles and their sequence furnishes the CWG with an 'ideal' plan.

2. When the CWG now proceeds to detail the learning organization, certain changes may prove necessary: e.g. leapfrogging individual modules or switching levels.

3. The 'ideal plan' retains its guiding role, because it helps to gauge the coherence of our own planning.

4. The 'master plan' will not solve all planning problems, but it is a way of assessing and guiding our own planning.

Decisions on learning organization

1. Agree in the CWG on the timespan of the business training.

2. Many factors affect this decision:

- Goals and scope of business training
- Extent of technical training
- Learning level of trainees
- Qualification of available teachers
- Willingness of businessmen and technicians to cooperate.

3. Careful! These factors are often bound up with definite interests which mean that decisions are frequently taken on planning problems to safeguard personal or group advantages and not for curricular reasons.

4. If the business training programme has to be limited for lack of time, a run-through at one level at least should be completed.

5. Start with the supplementary business project, when the technical training departs from imparting technical routines and starts with imparting productive activities.

6. Make absolutely sure to avoid a theory bias towards the industrial-technical side (parts lists for example) obliging you to impart supplementary business knowledge in a pure crash teaching course at the end of the training with no bearing on the project. This will not do the job.

The training plan and developing detailed learning goals

1. From the master plan draft a training plan for the supplementary business training.

2. This training plan must give more detailed shape to the modules developed (detailed learning goals and detailed topics).

3. Proceed from the rough learning goals and rough topics of the framework training plan.

4. This detailing gives us the respective detailed structure for the training module in the training plan detailed learning goals and detailed topics.

Developing learning aids

Developing learning aids is key for a supplementary business training tailored to the needs of trainees, specific didactic requirements and special occupational activities.

What to do

1. Develop your own learning aids for the trainees.
2. Plan time and inputs based on CWG resources.
3. Specify the first major work steps.
4. Specify what tasks can be performed before or during training.

Develop the following:

1. A learning book with the learning topics
2. A work book with tasks
3. Both books must be tailored to individual occupations.
4. A teacher's handbook with the following contents:

- Intentions and goals of the supplementary business training
- Pointers to the trainees' learning and work books
- Module survey
- Demands on teaching staff
- Pointers for using the learning and work books bearing on the individual training modules
- Help on the individual modules (goals, using the learning and work books, method and media for putting the module into teaching practice)
- Pointers on testing learning achievement

8th planning step: Training and teaching analysis (in detail: pp. 89-93)

Based on the goal analysis and learning organization analysis, the training and teaching analysis describes the training planning of the supplementary business training in tandem with the industrial-technical training. This step is a further refinement of the decision steps at rough and detailed goal level,.

Tasks

1. Plan the training and teaching units in step with the progress of technical training. This will enable you to draw on experience from previous teaching and training segments.

2. Based on the training modules, the teaching and training planning specifies definite learning goals in connection with training and teaching topics.

3. Teaching planning contains pointers on

- the social form of training and teaching
- method

What you can draw on

1. Findings of the learning organization analysis
2. Schedule for learning organization
3. Experience of teachers and observations during teaching
4. Evaluation of the training and teaching units conducted
5. Teaching planning framework
6. Pointers on suitable social forms and methods

Planning step 8: Teaching planning

• Stress in CWG work the preparation of teachers, technicians (experts and local teachers and trainers).

• Provide close guidance to teachers in the initial stages

Trainers/Teachers

1. It is essential to tell the teachers that their job is not to impart (abstract) management training in this project; they must equip trainees with practical tools to deal with occupational problems.

2. The trainers/teachers must play different roles when teaching and combine these:

- Knowledge mediator
- Organizer of problem-solving learning processes
- Moderator

3. These different roles must be practised so do not confine your teacher's training to a series of briefings.

Didactics

1. The topics have been described for the most part in the material on training modules.
2. They are geared to business practice and activity sequences, not theoretical systems.

How to link up with the technical training in the project and the national market

1. Via cooperation with the technical trainers
2. At content level by including teaching aids/media from working practice.

Method

Training method should be designed to afford insight into the role of business activities and foster self-reliance in the trainees as well as impart knowledge. Basic rule: from guided to autonomous learning.

1. Avoid lecturing or teacher-centred methods.

2. Give the trainees research jobs to do on their own workshops or the local market, for example.

3. Involve the trainers from the technical sector in the business training programme.

4. Give small groups case exercises to apply and consolidate the knowledge acquired.

5. Invite practicians to attend the training. They can help provide a motivating lead-in to the training module, provide examples and link up with applied practice.

6. Try to develop a mini project that spans the individual training module and achieves an activity outcome that helps place the topics in an overall context.

Media

1. The media used in teaching are not just there to illustrate.

2. Rather, the worksheets/forms should be designed for later use in subsequent everyday work.

3. Their practice-centred design should be a structural teaching element.

4. They should be explained or developed further in discussions with the teacher and filed along with commentaries/notes in a work folder.

5. This work folder should be used like a toolbox.

9th planning step: Curriculum evaluation (in detail: pp. 93-96)

The key question in curriculum evaluation is: What is the impact of the curricular intentions/design on the trainers and trainees in training practice?

Tasks

1. Decide when to evaluate: whether it should be ongoing or after completion of the trial run.

2. Organize the teacher upgrading.

3. Adopt an open, curious attitude and instill a sense in everyone involved that mistakes are learning opportunities.

4. The CWG must make a realistic assessment of its capabilities for evaluating the curriculum (time, money, staff).

5. Try to monitor teaching.

6. Hold evaluation discussions with the trainers involved (technical, business) and the trainees.

7. Monitoring teaching and evaluation discussions should be recorded for subsequent improvements.

8. Use the evaluation findings for planning/altering the training module and subsequent measures or similar projects.

9. Use test groups if you want to conduct pre-training tests.

    1. Test group: technical experts not directly concerned with developing the business training module.

    2. Test group: local technical trainers with company experience.

    3. Test group: industrial-technical trainees.

Self-assessment by teachers and trainers

1. Draft a straightforward questionnaire for self-assessment that permits short answers.

2. Use the following list when drafting the questionnaire:

General key questions for assessment:

1. What are the learning achievements at the end of the supplementary training?
2. What are the reasons for the shortcomings in the supplementary business training?

Special key questions for assessment

1. Was the basic curricular decision to link training goals and topics with business routines and ongoing business decision-making right?

2. How effective was the desired close link between industrial-technical and business topics?

3. What is the best way to match up the technical and business training courses?

4. Have technical and business trainers cooperated and if so, how would you assess this cooperation?

5. Do the developed training modules of the framework curriculum cover the range of necessary business knowledge for your own business course?

6. How would you assess the structure of the modules? Are they close enough to practice and is the level appropriate?

7. Do the trainers keep close to industrial-technical practice and train for practice or do they cling to abstract theory?

8. How do the trainers deal with suggestions on method (mobilize trainees, run projects)? Are they adopting a new teaching style?

9. How do the trainers respond to the notion of the business toolbox and do they view this as a major training goal?

10. How do trainees respond to pro-active, practical, activity-centred training and teaching forms? Do they draw connections with industrial-technical work operations and does that make sense to them?

Part III: Rationale

Principles of curricular construction

Basic curricular questions for developing supplementary business training

Problems of curriculum development

The following seven questions and (still general) answers address the central problems of curriculum development that must be solved in the context of the industrial-technical project and its target groups:

1st question: What are the prospective target groups from industrial-technical training for the supplementary business training?

This is the crucial question for many projects: not all technicians and craftsmen need business training. The team has two basic priority questions to discuss and settle: is there a need for supplementary training and what can be expected of the trainees in view of their entry qualifications and prior education? It is therefore vital to examine the setting and initial conditions/capabilities of the trainees before starting to plan the supplementary business training.

Search for answer:

The training needs must be determined by identifying future occupational profiles. This is not always easy, because it is often unclear what a trained dressmaker in Chile or a trained joiner in Uganda can do afterwards, whether there are opportunities in the formal or informal sector as wage-earners or self-employed. Obviously this will affect the shape of the supplementary business training.[1] The concern is to enlarge the information base in the team.

[1] The authors of the guide assume that the analyses in all curricular planning steps must be conducted with gender differences in mind. This applies in particular to the target group analysis, employment analysis and activities analysis. In the search for other pilot projects to try out and conduct supplementary business training courses, we are therefore also especially interested in GTZ-assisted projects to train women for industrial-technical occupations.

Equally important is the prior education of possible trainees. Do they have a primary, first or second secondary qualification? This decides the scope and the level of business training topics. Based on the answers to these basic questions, the next questions can be discussed and answered.

2nd question: What are the goals and learning goals of the supplementary business training?

Search for answer:

Think about the possible goals of a business sub-curriculum aligned with the industrial-technical project and discuss in the team, select the learning goals and specify the selection criteria. Give reasons for the selection of goals with activities, qualification and conditions analyses. All this need not be very detailed and precise: it is more important to look at practice and involve and ask practicians.

3rd question: How shall we select business topics to achieve the selected learning goals?

Search for answer:

> Think about the topics, refer to specialist books but always keep in close touch with the technical project and its possibilities. Select topics to achieve the learning goals with brief reasons for goal-topic links (interplay between curricular and business didactics analysis: the business didactics analysis will for example point out the essential role of bookkeeping and lead into the system of bookkeeping; the curricular analysis then tells you whether the target trainees need to learn single-item or double-item bookkeeping).

4th question: How can we organize business topics for effective training (teaching)?

Search for answer:

> You must locate suitable interfaces in the industrial-technical training. A case-to-case decision must be taken on whether a business training segment needs to precede the industrial-technical training to link up business topics and instruments with technical topics (topic and time sequence of business training) or whether the training in the business sector can run parallel with a certain phase in technical training.

5th question: How can we ensure the effectiveness of business topics?

Search for answer:

> This depends on two things: the suitability of selected interfaces between technical and business training steps (e.g. bookkeeping as a technical and business problem) must be monitored and assessed and tasks must ensure that business instruments (such as cost estimate sheets) are actually applied to technical tasks (costing motor vehicle repair for example). The business tasks must combine technical, occupational and practical relevance (no tasks that simply call for book knowledge).

6th question: How can we organize curricular work?

Search for answer:

> The best way is for the technicians in a project to see how to integrate business training elements based on their own knowledge, assisted by local business experts and/or short-term experts and referring to this guide.

7th question: How can we gauge the effectiveness of curricular work?

Search for answer:

> The effectiveness of the curriculum ultimately depends on whether the graduates have actually been qualified for the occupational and activities field (external effectiveness). In addition to an external check, it might also be useful to conduct an internal check of the sub-curriculum to see whether it is coherent (congruence of planning and application and the individual steps).

To answer the key questions, we need to draft a business sub-curriculum where the business goals and topics are validated, selected, organized and applied. This prevents a blind selection based on tacit values and unquestioned preferences.

Organizing curricular work as open-ended curriculum development

Organizing curricular work

The following is crucial to the 1st planning step - the organization of curricular work. Due to its overriding importance, we highlight this general issue of organization separately from the systematic discussion of individual planning steps and deal with it in advance here. Later, in the 1st planning step we look at special organizational conditions for integrating business sub-curricula.

Solving problems in practice

Planning problem 'bottleneck'

When we look at the host of tasks resulting from the answers to the above seven questions, the question immediately arises of how we can possibly cope with this additional workload under the local conditions. We must forget any ideas of perfectionism or to return to our analogy at the beginning: we are not aiming at the perfect landing. The curricular work can only be done and organized in cooperation with local experts in a practical and open way. We are developing a curriculum under normal, not ideal conditions. So our proposals are deliberately premised on the situation facing the local planner with all his/her working constraints. These are the 'bottleneck' of the planning problem: lack of time, material, staff and money for planning work.

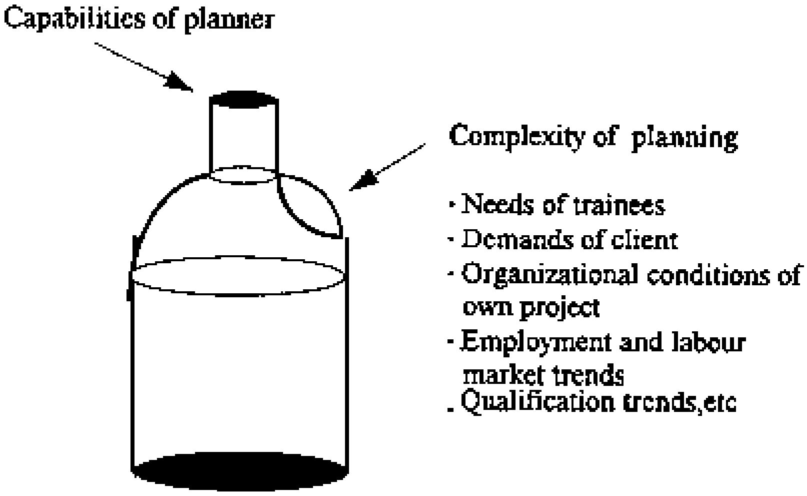

Figure 2: The planning problem bottleneck

Complexity of planning problem

Above all there is a lack of information, but even if we assume an (ideal) comprehensive information base, we still have the problem of our own limited planning and processing capabilities. The capabilities of the planner stand in no reasonable relation to the complexity of the planning problem.

Faced with the sum of planning problems and the desire to find a good solution, every planner and planning group suffers from a 'bad conscience'. The rift between the desired answer to the problem and the actual options open is too wide. We suspect that this is particularly common when technicians have to cope with the unaccustomed supplementary business training and that this causes added stress.

So the following brief advice can be of genuine practical value. Even with an array of aids, we cannot basically do anything about insufficient information (on the technical side as well incidentally). This is of course not meant as an argument for simply making the best of the knowledge and instruments that happen to be available to a planning group - the concern should still be to improve the information base - but we can only widen the 'bottleneck' not get rid of it.

Widening the 'bottleneck'

We must face the fact that curriculum planning decisions will always be ambivalent, i.e. that other decisions are conceivable. This has advantages and disadvantages: selection options but also uncertainty. With this planning problem (integrating business training modules in industrial-technical projects) we are not dealing with simple, direct inferences from one single business didactics problem complex such as constructing modules from business text books; we have to think in a systemic way to re-link the problem with diverse curricular determinants (see contents of bottle!).

Open-ended curriculum development

So what we are concerned with here is open-ended curricular work geared to practice. Open-ended curriculum development means the planner progresses tentatively from one decision problem to the next. For lack of information we simplify the decision problem. The. point here is that these simplifications are not the result of convenience or prejudice but as far as possible the outcome of a deliberate decision-making process weighing up pros and cons. The advantage of a deliberate and reasoned decision is that it is easier to locate mistakes and hence avoid them as well. We must try to find a middle road between an endless exploration of curricular conditions aimed at a kind of omniscience and curriculum development based largely on hidden prejudices and unexamined preferences.

Planning steps in curriculum development

9 planning steps of curriculum development

Faced with the difficult challenge of curriculum development our typical response is to search. A major help is to order and subdivide the curricular problem into successive planning steps.

1. Organization of curricular work, basic decisions
2. Occupational and activities analysis
3. Qualifications analysis
4. Preconditions analysis (project preconditions, prior education)
5. Business didactics analysis
6. Goal analysis
7. Learning organization analysis
8. Training and teaching planning
9. Curriculum evaluation

Strategy of small steps

In these individual planning steps our solutions are always provisional and limited. We move tentatively forward with a strategy of small steps (muddling through). In curriculum development there is no reason why we cannot behave practically. The main point is to widen our respective information base and control the decision-making process as consciously as possible. An open-ended curriculum development is therefore never finished. Changes and improvements are always possible and made after individual trial phases. Good training plans come about less through extensive theoretical preparation than a close interconnection between theory and practice which ensures more prompt testing and improvement of the training plan.

Common to these points on an open-ended curriculum is that they stress training practice and place training staff in the role of curriculum planners and implementers. The open-ended curriculum tries to combine the advantages of the local staff, the trainers with their local knowledge, the trainees, the teaching and practical training (= adaptability, geared to situation) with the demands of curriculum development (systematic preparation, conduct and evaluation of training). The most important curriculum planners therefore are the local experts, but they must gear their decisions to curricular yardsticks.

Individual planning fields

For our purposes we distinguish 9 curricular planning fields: curricular framework (planning steps 1 and 9), curricular condition fields (planning steps 2-5) and curricular decision fields (planning steps 6 - 8).

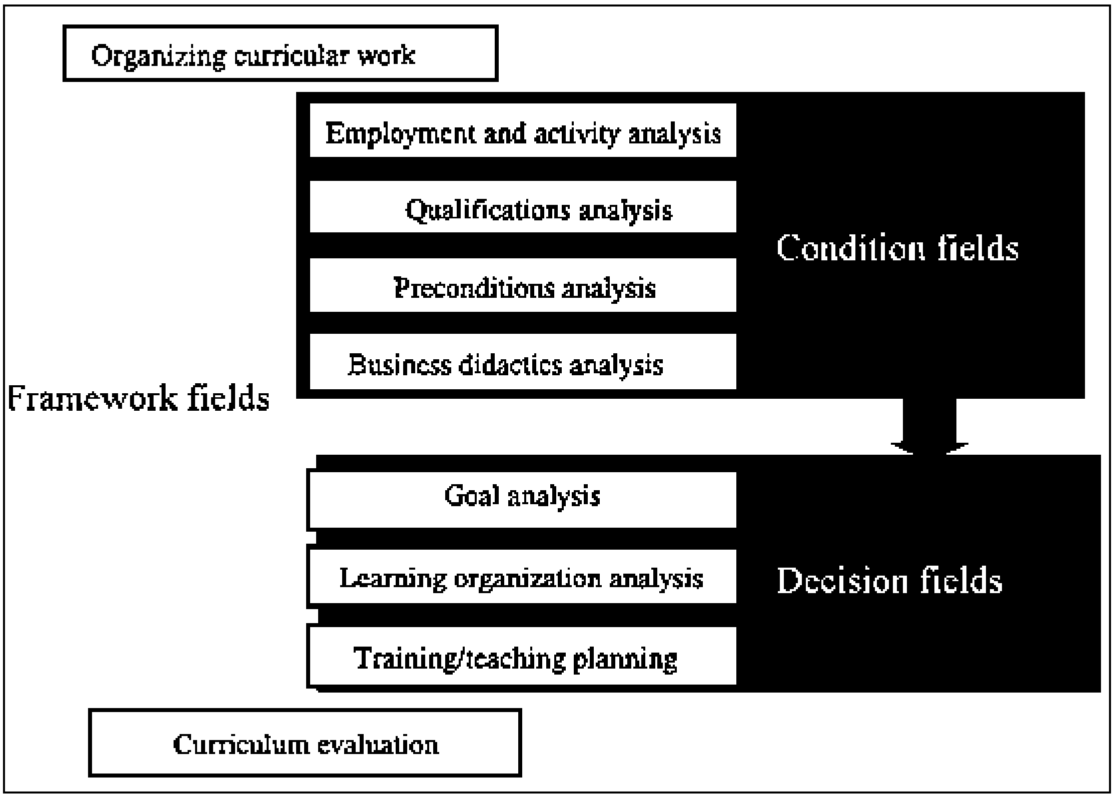

Figure 3: Planning steps in curricular planning

This division into framework, condition and decision fields is useful.

Curricular framework fields

a) It indicates the overriding importance of the curricular framework fields 'organization and basic decisions' and 'evaluation' for actual curriculum planning and implementation (before, parallel, after).

Curricular condition fields

b) The category curricular condition fields 'occupational and activities analysis', 'qualifications analysis', 'preconditions analysis', 'business didactics analysis' is where we must logically first look at the facts in the condition fields before taking decisions on the curriculum in the narrower sense. These fields pose major conditions for our ensuing curricular decisions.

Obviously we first need to know what occupational fields and activities are possible for the target group of our business sub-curriculum, before asking what qualifications are necessary to perform them. Then we ask what prior education the curriculum target group have, what they 'bring along' and what the prospects are for assimilating supplementary business training into the industrial-technical training and then we look to see what learning topics and structures business didactics has to offer in this connection.

Curricular decision fields

c) When these conditions have been identified and evaluated, we can then proceed to the curricular decision fields to design the structure and sequence of the sub-curriculum.

Curricular decisions

Decision on rough learning goals

The first decision to take is on the rough learning goals of the business sub-curriculum, their origin and the reason for their selection. They pertain to the general areas of the sub-curriculum (training modules) and draw the rough lines on what needs to be learnt about buying, stockkeeping, work and production planning, labour costing, etc. (level of learning). The structure of the general areas results from a combination of business didactics proposals and how we bring the rough topics from prior planning steps in curricular analysis to bear on our project. The goal defined always involves a rough topic statement, such as: 'The learners know the major components of costing and can apply them.'

Decision learning organization

The second decision is on learning organization. In subject matter analysis a double step is taken based on the goal analysis: detailed learning goals must be defined and learning topics detailed. The rough analysis proceeds to detailed analysis (the training modules are specified in more detail). Here too we combine curricular specifications (training of technicians, alignment with industrial-technical activities and learning processes, learning at interfaces) and basic business didactics models. The rough learning goal and rough topic bloc 'Know and apply major components of costing' is given more detailed shape: 'The learners know how to calculate labour costs and overheads and can apply their knowledge to occupational tasks.'

Decision on teaching planning

The third decision to take is on training and teaching planning. From the decision steps at the rough and detailed goal level, we proceed to even greater detail here. The training modules are used for training and teaching planning. The definite learning goals are specified in connection with the respective topics. The training and teaching planning also contains pointers on method.

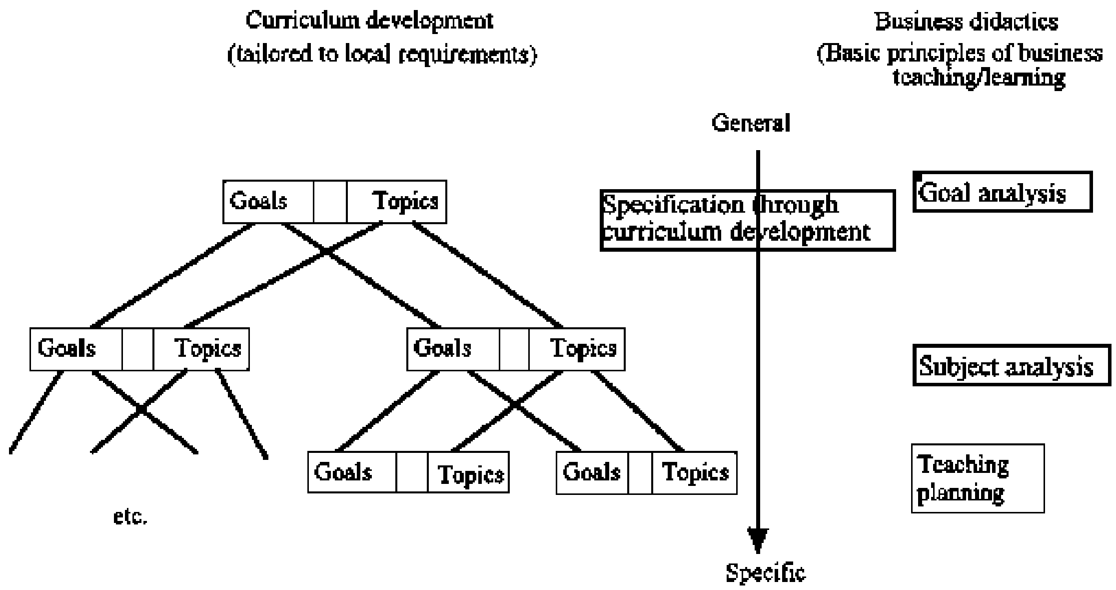

Figure 4: Breakdown of topics and goals in the auricular process

1st planning step: Organization of curricular work and basic decision

Developing business training modules is an additional task in industrial-technical projects that calls for time and consideration. On occasion in the past a 'quick fix' has been sought by simply selecting 'suitable' learning topics for supplementary business training from existing business textbooks or learning aids. In some cases too framework curricula from the industrial countries have been combed through and certain topics taken over from economic theory and simplified. Knowledge and business instruments selected in this way turned out to be too general to help the trainees in such supplementary training courses. The topics did not fit the country, the training course or the envisaged work activity.

Do not do this. Also be wary of advice from businessmen and economics/business teachers, which is often ill-considered and relies on familiar general business topics. This also applies by the way for businessmen and economics teachers from emerging nations themselves. Their training is also beset with a basic problem: worldwide, business economics and the economics taught in various training institutions based on it is very abstract and divorced from business reality.

Danger of planning to perfection

In reaction to this, though, let us not fall into the trap of planning to perfection. Nevertheless, a curricular task of ours is to organize the development of business training modules. What does this mean? First of all, we have to take a close look at our industrial-technical project with its specifics and sundry training courses and pinpoint where we can integrate a supplementary business training in the technical training courses. This basic analysis is indispensable. It has to be conducted at the outset by the technicians in the project themselves. If we are unclear about our intentions, we shall go astray. We may have to detail or revise our goals later but there is no point in detailing the goals of supplementary business training at the outset. Nor can we. At the beginning of planning work, goals are always uncertain, but they are essential as guidelines. We have to be willing to get something wrong, which is why we need open-ended curriculum development: development work in situ that approaches its goal step by step, that is prompt to apply and try out the training module with local trainers. Motto: try out and improve instead of planning for too long.

Settling the basic question

So, the technical experts should sit down with the team leader and their counterparts to settle the basic question of whether supplementary business training is necessary or not, whether we want it. We must be aware of competition with other educational establishments in the country, which might resent a kind of 'poaching'. This must be cleared up first in the 'inner circle'. There is no point consulting business experts at this point. If a project team and its counterparts are themselves not convinced of the basic need for supplementary business training for their own target group they might as well leave it at that because motivation will lapse very soon.

A look at the training courses usually quickly reveals whether supplementary business training (which will always remain restricted because we cannot impart everything) makes sense or not. We must decide this based on our own reasoning. A precise rationale can be left until later, but it is obvious that a motor vehicle mechanic who will have to cope on his/her own later on will also need to master business tasks: labour costs, cheapest supplier of spare parts, costing and billing, etc. This also applies for the dressmaker who will have to open her own dressmaking shop, but also for skilled workers who are highly qualified and will have to prepare and organize work sequences in a small enterprise. These are only examples, but they illustrate that pure technical training only makes sense under certain conditions.

The first rough decision on supplementary business training is based on the respective industrial-technical training course. Details can be dealt with in later planning. It is crucial, though, to found the business training on the industrial-technical training course and tailor its structure (goals and topics) and schedule (when to impart which goals and topics with which methods) to the industrial-technical training. We think technicians are experienced enough to take a basic decision on whether their target groups need supplementary business training or not. After the basic decision 'Yes', the project's curricular work group goes through the individual training courses and describes the general fields of business activity suitable for the qualified trainees of the training course based on their national experience. We must draw bold outlines here to avoid confusion in the work group. After all, decisions taken can still be revised.

We gauge the basic decisions by the technician team to be important because they ensure that the link between technical and business training is maintained and enable us to evaluate subsequent business specialists. Otherwise there is a danger of their developing their own separate business training courses, which could be more convenient for all involved but is of little use to qualified trainees.

Example:

It helps to seek typical situations and 'stage' these.

<u>Example 1: Service company: motor vehicle workshop</u>

The customer comes to pick up his/her repaired car and complains about the high bill. The master craftsman cannot itemize the total and is quickly persuaded to charge less. He is dissatisfied with this and resolves in future to draw up a bill for labour costs and materials with each repair job listing the hours spent for each work step and the replacement parts in stock or ordered separately.

This scenario enables us to describe the business training needs based on the overall operations of this service enterprise, such as drafting cost estimate sheets and bills, improving work scheduling, planning and coordinating inventory and procurement.

<u>Example 2: Industrial enterprise and production planning</u>

A production foreman reports that many work sequences in the production schedule are not defined in enough detail and badly synchronized resulting in delayed transfer of inputs into the next line and interim quality assurance is not always conducted. This causes regular delivery problems and complaints, incurring substantial additional costs for the company.

Conclusion: The supplementary business qualification must focus on production planning and work pre-planning, for example, drafting accompanying documents specifying time requirements for each work segment and production line and transfer points and having personnel make corresponding entries during production (such as actual times, and quality assurance conducted).

The goals of supplementary business qualification here would be confined to 'production' would cover topic blocs such as quality assurance, production and delivery planning, basic data acquisition for calculation.

Selecting business experts

If the curricular work group has come this far and recorded its decisions, it must look for an expert in business work and learning. It must however retain control to make sure that business knowledge is imparted where it is relevant to industrial-technical training (co-determining interfaces between technical and business work and learning activities). The business expert is seldom able to do everything - planning the business training module as well as putting it into teaching practice. Experience has shown the importance of recruiting a planner and developer first who can then take charge of selecting suitable teachers or advise the technical experts in their selection.

Clearly, the selection of the business expert is key to further curricular work. Of paramount importance is that the expert comes from the country itself. He/she can be a European engaged there or a national. Practical experience in the economic life of the country comes next. In our experience it is better not to employ experts from business or management schools, because they often lack practical experience and subscribe to an abstract economic theory, divorced from the practical needs of an electrician or motor vehicle mechanic. They tend to impart basic business knowledge in pre-packed 'capsules' - such as basic single-item or double-item bookkeeping or full-cost pricing - instead of addressing the needs of a craftsman or service technician and deciding on the scope and level of business knowledge and methods from there.

Another key quality is the willingness to cooperate. The expert must want to communicate with the technicians (and vice versa of course) and gain from their experience and views, instead of clinging to his/her business expertise (expert authority). This also means that the expert must take a look at the workshops and technical training courses to find out in situ promising interfaces for integrating business training units. Ideally of course the expert should be able to draw on practical business and teaching experience, but if you have to choose between practical business experience and teaching experience, we rate practical business experience higher. It is better to trade off inexperience in teaching, especially as the technical experts can provide advice and support in curricular planning.

Qualifications of business experts

When selecting the business expert we must account for diverse qualifications that are seldom found in one person. The main one for us has been familiarity with the country and practical business experience. On top of this there are different conceivable combinations: a European expert with experience as a former business manager in a technical firm in an emerging nation develops the business training module in cooperation with local teachers, which they then apply in teaching with the various technical training projects. Alternatively, the local counterparts in the technical project develop the curricular parameters for the business training module, which is then discussed with German experts and implemented by business teachers from the country concerned.

Rough plan for curricular work
Local teaching staff

After the business expert has been found, a rough plan for curricular work is drafted jointly with him/her. Here a decision must first be taken on whether the business module should be drawn up and tried out as a whole or in steps. In line with the principles of open-ended curriculum development, we propose developing and testing a rough framework for business training or teaching unit (faster switching from development to testing). This however means early recruitment of local free-lance teachers who can help develop and then implement the unit. That is also a difficult decision, because local teachers are often proud of their theoretical knowledge and sometimes fail to grasp the need to deal with practical business training which they accord lower status.

Our experience indicates that business training - especially in practical tasks - must align itself with the respective industrial-technical training course, so the technicians - experts or local trainers - must keep in touch with the businessmen. From this phase on the curricular work group members can alternate depending which training course the business topics and methods are tailored to. Ultimately, the business training modules will address electricians or motor vehicle mechanics or carpenters.

Schedule for curricular work
Written material for curricular work

In addition to staffing, a rough work schedule must be drafted. It should be a little more detailed for the initial phases and quite rough for later tasks. This schedule, which should be placed for all experts and those involved to see, must contain time, task and staff assignment columns. Agreement must be reached on drafting briefs on the allocated tasks (e.g.

describing interfaces between business and technical work and learning contexts for the individual training courses) to steer the work in the individual sessions (document-assisted curricular work). This has the healthy effect of obliging us to prepare the work for individual sessions, which would otherwise often be wasted in random talk. A brief record of the outcome of individual sessions must also be made (recorded curricular work) to trace the individual decisions and the reasons for them and enable a stepwise refinement and development of curricula without unnecessary repetitions and loops.

Budgeting

Finally, for the decision in favour of supplementary business training, we need to draw up a rough budget. In itself this is no great problem, but you will have to check the project resources to secure finances for the business planner and the teachers. You also need to know the costs for business learning aids which usually have to be developed by the project or adapted to specific training purposes (teacher handbook, trainee learning and work books). You also have to find out whether central funds are available for supplementary business training.

At the end of the organization phase of curricular work a basic decision has to be taken that supplementary business training is needed for certain technical training courses. The next planning steps then proceed from this. Keep the basic need for supplementary training in mind but no more. The main aim of the next steps is to detail the basic decision taken.

2nd planning step: Occupational and activities analysis

Remember that for the basic decision on supplementary business training we sorted through our own industrial-technical training projects to locate interfaces for business training. This initial 'internal' analysis must now be confirmed from outside by the activities analysis where we look at the work activities connected to our training courses and prospects for their further development. This is why in a second 'outward-directed' curricular work step we look to the real world of employment and work and foreseeable trends, to the economic structure, kinds of enterprise, jobs and other sources of income in the country.

Unfitness of occupational and activities analyses from industrial countries

The extensive set of instruments of occupational and activities analysis from the industrial countries are no use here. These highly formalized instruments cannot deal with the specific work and employment patterns in emerging nations. With the high unemployment there and the resultant need to earn a livelihood outside the formal employment sectors, we must include informal earning opportunities in our analysis. It is precisely these that European occupational and activities analyses ignore.

We now approach the occupational and activities analyses, but not with a vague, broad view; we have a definite focus. This is provided by the industrial-technical training courses, for which we want to find the necessary supplementary business qualifications. If we are training manpower in the metalworking and electrical occupations, we have to take a closer look at the work activities these entail. Our concern is not to make an empirically validated and comprehensive record of occupational activities and draw up exhaustive activities lists.

Limited activities analysis

Instead, by describing bundles of activities, we want to find approaches that are plausible in curricular terms. Even for this 'limited' activities analysis the surrounding factors of influence are still extensive. To help collate this broad field of supplementary business training determinants we can assign them to three large groups (condition, decision and activity fields): these three groups bear differently weighted relations to our business curricular work and this weighting can provide us with signposts in this planning step.

Condition fields

The socio-cultural setting, the economic system and the associated development planning, the legal, fiscal and social system, the industrial and employment structure and the labour market fall under the category of condition fields. This groups supplementary business training determinants that we cannot directly influence through our business curriculum project. These conditions are important for our supplementary business training because at this level we can locate global fields of application (example: promoting the tourist trade).

Decision fields

Now comes the group of determinants that have a direct influence on our project: the decision fields. These comprise the regional economic structure with its sectors, branches and enterprises; the regional market structure with its formal and informal segments, the forms of market organization, kind and extent of labour supply and demand, the ratio of self-employed to wage-earning activity; regional development planning such as transport, economic and industrial/business development. This set of determinants is important for the business sub-curriculum because we can locate key development targets such as small and medium-sized business promotion via integrated technical-business training, promotion of startups, promotion of micro enterprises or management abilities.

Fields of activity

The narrowest set of determinants affecting the supplementary business curriculum are the fields of activity. In response to this set of determinants stemming from company and marketing work activities, we must give thought to curricular parameters, such as the selection of suitable training modules as well as make topic distinctions within the training module itself with regard to certain legal, organizational, costing, bookkeeping and other topics.

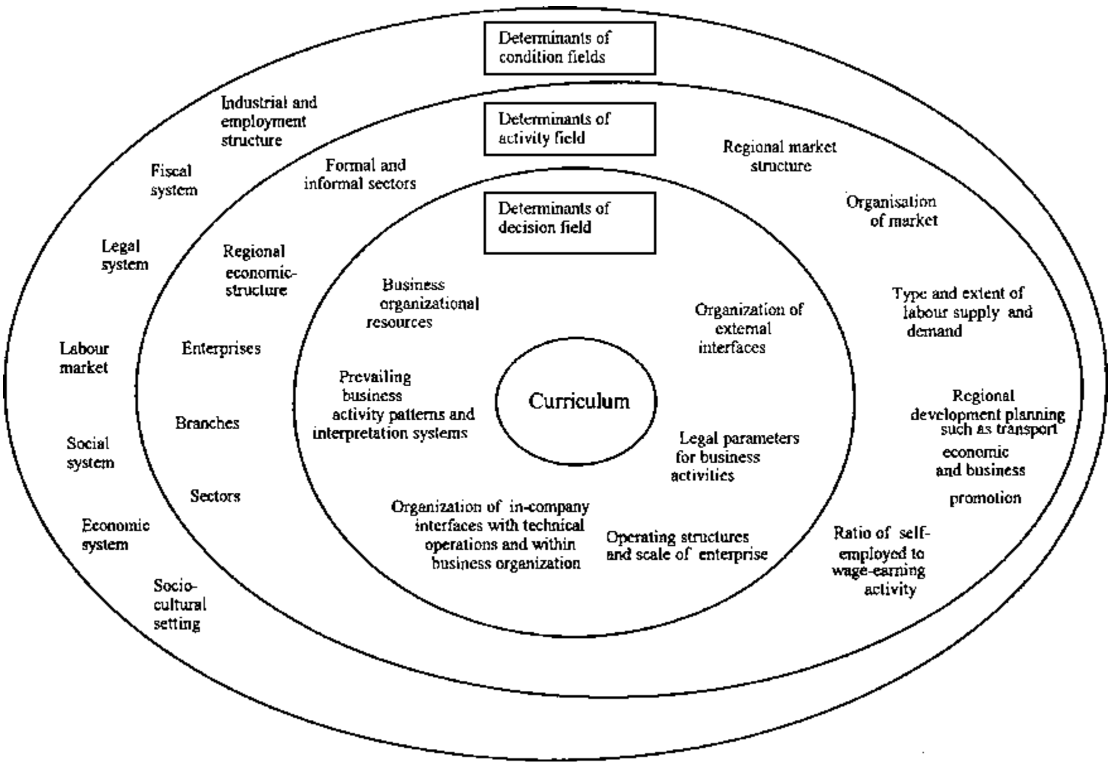

Figure 5: Curriculum determinants

Determinants from business activities

As for the occupational and activities analyses we have many determinants, which we assign to the condition and decision fields from the industrial-technical projects already underway, but we usually lack information on the determinants of the business curriculum project from business activities. These are however crucial for practical curricular work. This is also why this planning step places stress them. They include the following:

• Company structures and scale of enterprise (e.g. operational organisation and division of labour over time (small enterprise) or within the workforce (medium-sized and large-scale enterprise); allocation of business functions such as personnel, procurement, sales, finance, costing, production planning; division of directing, executive and advisory personnel

• Prevailing business activity patterns such as common routines (e.g. rough calculation, informal agreements) and interpretation patterns (e.g. assessing markets or economic viability)

• Organizational business resources such as forms, index files, vouchers and business equipment such as typewriters, calculators, automatic accounting machines, computers

• Organization of in-company interfaces to the technical side and within the business sector (e.g. interlinkage of procurement, production and sales planning, buying and stockkeeping, operating costs and calculation)

• Organization of external interfaces (e.g. sales or procurement organisation and market surveillance, recruitment and labour market, demand estimates, production ideas and product design, financing and payment transactions)

• General company law (employment contracts) and contractual law in procurement and sales

In the occupational and activities analysis we therefore propose proceeding from the inner circle of the activity field and putting in most work here. The above set of circles contains pointers on where to connect without requiring a systematic line of observation. The determinants from the outer circles of the decision and condition fields are often familiar from the industrial-technical project and can be used for the supplementary business curriculum. If you need more information consult relevant publications.

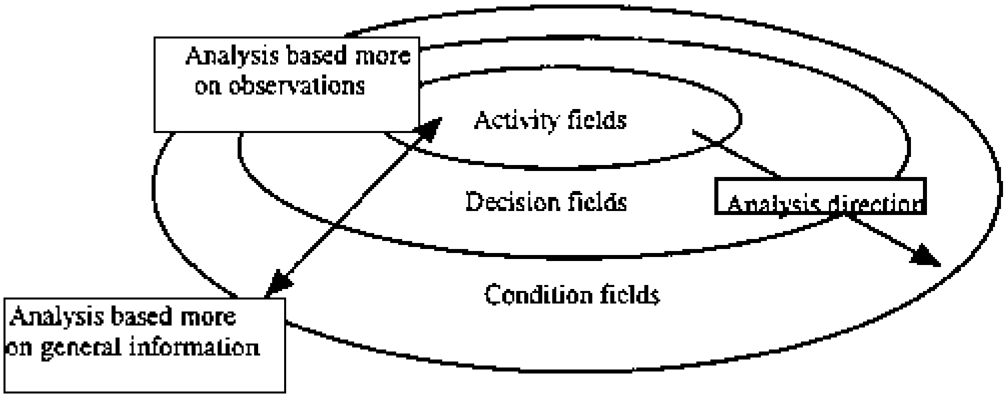

Figure 6: The general method of occupational and activities analysis

Gearing to working and occupational reality
Personal qualities for curricular work

That curricular work should be geared to real working and occupational life sounds obvious, but it is not. Very often curricular work proceeds quite differently by starting from existing curricula or training regulations from the industrial nations and then looking for topics for supplementary business training of technicians or craftsmen suitable for the special conditions in the pertinent country: we are prisoners of our own European training or biased due to our experience in other emerging economies. We must always bear these subjective factors in mind in curricular work and put them into perspective. If we do not, certain facile decision-making patterns will be applied to the question in hand. 'The topics in procurement, stockkeeping and sales are basically suitable for the training but they must be simplified.' Or, certain topics are selected from local curricula, which appear suitable on the face of it. Many mistakes can obviously be made in this way.

So it is essential to familiarize yourself with that segment of working reality in the pertinent country to qualified trainees from your own industrial-technical training courses to be able to give the supplementary business training a precise shape. You need to be wary of a misapprehension here: particularly at the level of the activities and preconditions analysis to keep returning to the basic question of supplementary business training, i.e. to a planning step that has already been decided. It is in our view very unlikely that the basic decision taken will be revoked. The technical and business experts in the curricular work groups are far too familiar with working conditions in 'their' country for this to happen. The main point in the occupational and activities analysis is to give shape to the basic decision taken. For this we need help and supplementary information. We obtain this from the work activities, we are training the technicians and craftsmen for. We ask ourselves how the motor vehicle technician usually works in his/her country and whether our qualified trainees are qualified for this. The same applies for electricians, carpenters, mechanics, dressmakers.

Visits to companies

To do this we must have a look at the various kinds of firms that are important for our project to gain an impression of the business components of technical and craft activities in these areas. Do not confuse this with preparing a sector study. Your observations must be far more specific: because you know the training courses you can target the economic and operative working conditions to which they refer. It is important not to confine our attention to formal industrial working conditions. This holds especially for emerging economies, where the industrial sector is not growing as expected. Our surveys are always spot checks. It is a good idea to prepare the company visit but this is not always necessary. Own observations must be supported and supplemented by discussions with owners and managers. The project's business expert may be familiar with local working conditions but he/she too will have to re-examine his/her experience to locate interfaces between technical and business aspects in the individual technical-crafts activities.

Examples for the activities analysis

Here are some examples for the activities analysis, which should be concerned with interrelations between activities and not with dissecting individual (small) elements: what is the structure of micro enterprises where locksmiths weld gates and windows, how do they obtain and finance their materials, how is the work organized, do they make notes for their work, do they know something about turnover, profits, who are their clients, how do they obtain orders, can they calculate and how, how many employees do they have or are they one-person businesses?

Or: we observe joiners and upholsterers fabricating tables and chairs. We see how wood is stored in a plastic sheet under a canopy exposed to the weather, ask ourselves how to run an efficient inventory. The same applies for the sales side. Finished stools and chairs are piled up in a shack. Surely these craftsmen need to know something about efficient storage or we should ask what induced them to keep such a large stock. We then see how the craftsmen are sitting in a row in the workyard working on one chair from start to finish. There is no division of labour. These craftsmen surely need to learn something about efficient work organisation.

Or: We visit the repair workshop of a local railway line. We go to the warehouse and examine the inventory system and records (index files, inventory accounts). This gives us a picture of the kind and level of stockkeeping and inventory accounting. We could cite many more examples. Does it make sense to provide technical consultancy in development projects at all without economic components, etc.? The examples however make plain that valid curricular decisions can be made from clusters of such examples.

Key questions for the qualitative activities analysis 40
Key question areas

Under the working conditions for industrial-technical projects in vocational training assistance, we advocate a qualitative activities analysis. We propose key questions to guide our observations and questions. Key question areas in our experience are:

1. Management
2. Procurement
3. Stockkeeping
4. Production/service organization
5. Sales

Examples of key questions

Owing to the economic and operative specifics we do not want to go through the key question catalogue in detail but just cite examples. They always address interfaces between technical and business work operations and should concentrate less on details and more on the overall picture.

• How do companies obtain and record information on prices for their input materials? (key question area 2)

• How does the enterprise price its product or service? (key question area 4)

• How is information on competitor prices for own products obtained? (key question area 5)

• Can the enterprise negotiate, when and how? (key question areas 2 and 5)

• Are production inputs or finished products stored and what is the inventory method? (key question area 3)

• How are stocks financed, can the company obtain credit from customers, suppliers, banks or other persons (or advance payments)? (key question area 3)

By making these observations we can learn about the interfaces between industrial-technical work processes and accompanying business activities in procurement, stockkeeping, production and sales and from this sort out key topics for the supplementary business curriculum. We also come across the level of business techniques (e.g. hardly any records) and thus find indicators for the level of learning process (e.g. what to impart in bookkeeping). Then what we do not do is take a textbook on the system and instruments of double-item bookkeeping and simplify that while retaining the overall system: we start from reality and confine ourselves to 'minimum' bookkeeping - elementary but systematic and consistent records (e.g. simple cash accounting).

Tips on visiting companies

If possible it is best to have two observers who can sit down after the relatively brief visits and talk about what they have seen and make notes on the main points. Our experience shows that it is not essential to conduct the observations according to a set system since the range of spot checks from the informal to the formal sector and from micro to large-scale enterprise cannot fit into an all-embracing system. We have simply kept to the rough parameters of operating functions. Also it is better to note the individual qualitative observations based on the single-case specifics and then standardize these later. This is important for subsequent curricular work and feeds into the information base of the other members of the curricular work group.

Our own observations or conclusions from the previous experience of business experts or technical experts as well are the starting point and centre of the occupational and activities analysis. We have suggested that our own observations and experience should be the point of departure before the economic and company structure (the determinants from the condition and decision fields) is examined further on the basis of the available material. This is done though at curricular problem points, i.e. selectively. In addition to our own experience and observations another major step is to discuss with European managers, engineers or master craftsmen working in the country. This is also a way of corroborating our own observations. Observations in the activity field can of course only provide a company-centred and often random vantage point, although a cross-section can be drawn from a series of observations.

Supplementing observation findings

So we have to supplement our observations and conclusions with analyses. We can draw on documents in emerging economies for this: national studies and publications, sector studies, statistical material, project appraisal and feasibility studies, development planning policy, regional and branch studies. You must assess their information value but the local experts can apply the necessary criteria thanks to their experience from the technical project. You know that national development plans, labour market figures, economic data, regional data, etc., have to be carefully evaluated. In our view, they should not take on a separate role in planning the occupational and activities analysis and should only be used for evaluation. They should be used to clear up doubts and corroborate statements on development trends. After analyzing the activity field the curricular work group (CWG) draws up a list of open questions to be answered by different members as allocated tasks and then evaluated and compiled in the CWG.

Systematizing the activities analysis

Now comes the concluding systematization step in the CWG. The business activities that are or could be important for the industrial-technical training course must be described (not broken down in too much detail). Here we link the connection points for business training in the industrial-technical project assessed in planning step 1 with business activity elements in working life identified in planning step 2. Let us illustrate this combination with an example. A study of the full-time school training course for joiners underscored the need for supplementary business training. In the timber warehouse the trainees learnt about the technical side of inventory and wood storage, using woodworking machines they learnt rational methods of woodworking and machining, they learnt how to pre-plan work for fabricating door frames for their own theory classrooms. Interfaces for imparting supplementary business knowledge were located in all these areas (efficient stockkeeping, low-cost production, efficient work pre-planning and design). The activities field analysis then confirmed the need for supplementary business training in this area, also from a practical point of view. Observations revealed uneconomic inventory, few low-cost modes of production, ad-hoc planning of work sequences, etc. The need for business training was found to be greater in foremen activities and especially for self-employed activities in this area. It was also found that supplementary business training was necessary up to the level of large-scale enterprise with its systematic division of labour. As however in the case in point the activity in this kind of enterprise was an exception, a look at the working relations gave clear confirmation of the need for supplementary business training.

Altogether, this phase showed that the industrial-technical and concomitant business sides are nearly always linked by frequent interfaces.

This applies above all for material procurement, stockkeeping, organization of production and repair operations, quality assurance, sales planning, cost controlling, costing and bookkeeping. In addition to this confirmation, the activities analysis served another purpose: it determined the level of activities and therefore pointed to what industrial-technical operations were particularly well suited to link up with business learning and the scope and level for this. This gives us major criteria to select and break down the general topics proposed by business didactics. It was also confirmed that business topics should not just lock in at interfaces, but that tasks and exercises should be geared in particular to specific occupations in training (trade-related).

3rd planning step: Qualifications analysis

We must now of course build a bridge between the job requirements described and the qualifications of the job holder. This planning step is taken inside the CWG (curricular work group). Qualification needs defining more closely.

Definition: By ***qualification*** we mean the sum of all knowledge, abilities and skills acquired by manpower or it must acquire to perform an occupational activity.

Job requirements qualifications

In this connection we must beware of drawing too direct and close a link between job requirements and qualifications. Otherwise we are in danger of making fictitious statements where tasks or routines are simply converted into qualifications by adding 'ability to...' or 'skill of...'. This explains nothing and gives us absurd statements like we need the skills to run a machine to run a machine.

We need to stress here that identifying work activities does not solve the problem of the requisite qualifications. Rather, we have to ask what knowledge, abilities and skills are needed to meet the activity requirements. What must I be able to do to meet the work requirements. Work activities in vocational training courses are a suitable approach but then we have to look behind the work requirements, so to speak. They are a kind of surface - the level of activity - hiding the qualification level which we must decipher. The key question is: 'What must the workers be able to do to perform the work tasks?' or from the training standpoint, 'What must the trainees learn to perform the later work tasks?' The qualifications behind the work activities are always more extensive than the work activity we see. This applies even for simple work. If after watching a stockist entering information into the inventory records we break down the work activity we see clearly how many different qualifications it entails: diligence, precision, motivation, skill, knowledge, control etc. Therefore we cannot logically infer qualifications from work activities (deduction); instead we must look backwards: what qualifications from a large cluster of qualifications can we usefully assign to a work activity or work context.

Observing work activities

Work activities are (only) an aid in this connection. That is why we must not take too narrow a view of the work activity but look at the broader activity context, as in stockkeeping for example, to assign qualifications. The observation of work activities should not be overdone in hindsight. It serves three main purposes:

1. Re-linking business qualification findings back to work activities (relevance to real life)

2. Locating the levels of these work activities (starting point for auricular work, which of course goes beyond this)

3. Identifying and outlining business work fields, but not drafting engineer type lists of work activities (grouping instead of separating)

Danger of planning to perfection

And here comes a very important point: in open-ended curriculum development, the CWG should not suddenly aim for perfection in planning. Despite all our good intentions, though, we will fall into this trap if we now start to analyze stockkeeping work activities with the precision of a time-and-motion study to find the qualifications. Identifying work activities in the planning phase 2 -occupational and activities analysis - had under conditions of curricular work in a vocational training project sensibly relied on qualitative observations and interviews. The only outcome could therefore be to identify the main intersection points for business activities in the setting of technical-craft work processes and determine their work level, which of course also affects the learning level.

So we must assign qualifications to activity clusters (= jobs or work sequences) instead of individual activity elements.

Figure 7: Assigning qualifications and activities

Not like this:

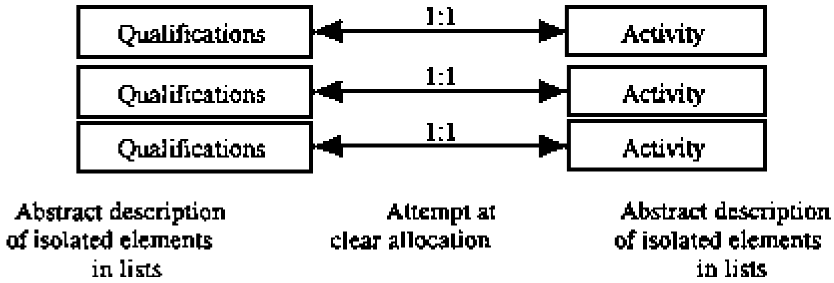

Figure

Like this:

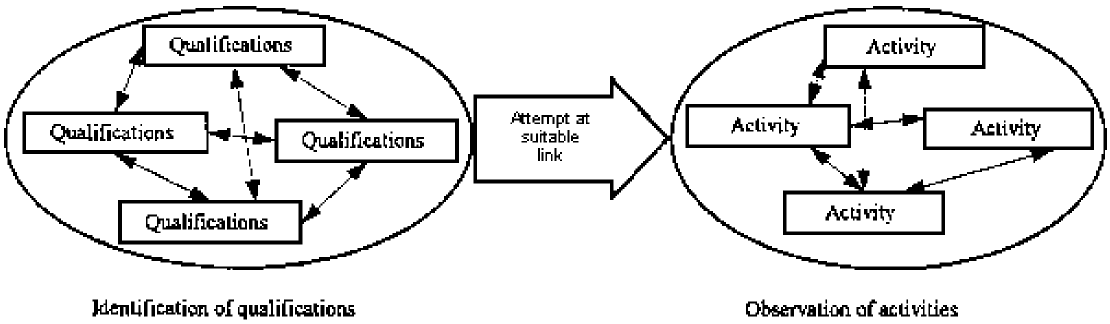

Figure

It is a help here to concentrate on interface areas when deciding on assigning qualifications and sort these out (procurement, stockkeeping, production/repair, sales, management). We assign the qualifications to these areas and the work activities entailed (jobs, work sequences). From what box do we now take the qualifications? To give the procedure a structure and make it easier to follow it is best to order the different qualifications.

Qualification matrix

For this we use a qualification matrix consisting of core and peripheral zones. The core zone contains the job knowledge and skills which however are always derived from a broader context. So it is appropriate in learning processes to impart skills and knowledge pertaining to the whole of inventory management although in working practice (here: stockkeeping) only plain inventory index cards are used. The relevance to working reality and work level must however be preserved.

The core zone of job knowledge and skills is supplemented by organizational knowledge (here: stockkeeping and adjacent departments), such as information channels, other workplaces, other work areas with which the stockist has to cooperate closely, such as procurement.

From the analysis of the job and organizational knowledge we gain the major topic areas of the supplementary business curriculum for further curricular work (here: inventory management). They provide the basis for specialist training.

The job and work organization knowledge and skills are supplemented by three more qualification areas that are essential preconditions:

1. The qualification area **mental abilities,** such as the ability to analyze facts, planning ability, decision-making ability, ability to grasp relations, etc.

2. The qualification area **work qualities,** such as diligence, punctuality, precision, care, orderliness, etc.

3. The qualification area **attitudes to enterprise,** such as interest in the work, satisfaction, motivation, etc.

Specialist and social qualifications

The qualification areas of job and organizational knowledge and skills as well as mental abilities are specialist qualifications. Work qualities and attitudes to enterprise are social qualifications.

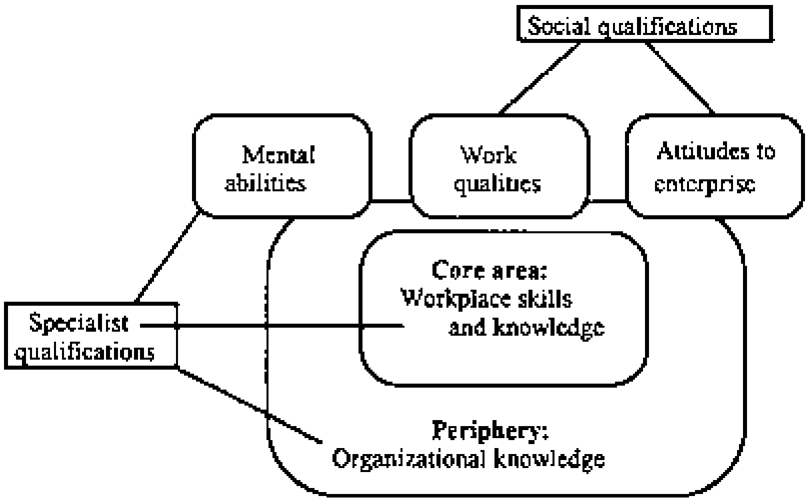

Figure 8: Qualification matrix

In qualifications for the supplementary business curriculum our initial concern is to draw up a very basic description of the abilities needed by qualified industrial-technical trainees to perform supplementary business tasks. They will be broken down in more detail later when specifying learning goals and topics. We shall now return to the model key question list from the activities analysis and give model answers to show what qualifications are needed for selected work tasks (how the allocation of qualifications might look).

Example from the key question list for activities analysis
Are production materials or finished products stored and what is the inventory system? (key question area 3)
Findings of the activities and work sequence analysis
Observations in a furniture makers revealed: restricted purchasing and sales stockrooms do exist and elementary inventory records are kept, but with gaps. No other records such as delivery receipts are kept nor are there even basic rules for inspecting incoming goods. There are no regulations on minimum and maximum inventory, etc. There is only a superficial link between stockkeeping, purchasing and sales.
Qualifications analysis
Job knowledge and skills: knowledge of merchandise, knowledge of inventory system, knowledge of how inventory index files work, booking incoming and outgoing merchandise, know the relationship between physical and bookkeeping inventory
Organizational knowledge: knowledge about location of stockroom in the company's operations sequence, knowledge of the role of stockkeeping for purchasing and sales, knowledge about ways of cooperating with procurement and sales
Mental abilities: Gain an overall picture of inventory processes, understand the interlink between procurement and inventory, analyze inventory levels and assess their importance
Work qualities: Precision when recording incoming and outgoing goods
Attitudes to enterprise: Interest in efficient stockkeeping

Empirical qualifications analysis
Normative qualifications analysis

So far, the qualifications analysis has been empirical. We assign qualifications to an observed work activity. So the qualifications are situated at the level we encounter. The level of stockkeeping activity in a cross-section of several micro and small enterprises might of course be higher, so we propose not switching from an empirical to a normative qualifications analysis (what qualifications are needed to perform a given work task better) until a cross-section has been made of the empirical qualification profiles. In emerging nations though we will in our training - and in the supplementary business training - be concerned with improving company practice by imparting higher qualifications to our trainees. This is why we must supplement the empirical qualifications analysis with normative qualifications analysis. That means we must think about what additional qualifications we must impart to our qualified trainees to improve stockkeeping in companies.

Surplus qualifications

It is however important to link empirical and normative qualifications analysis to keep in touch with working reality in an emerging nation and not just look down from the high normative ground of excellence to determine abstract qualification levels. This approach falls wide of the actual need for supplementary business training from the vantage point of the emerging nation and specific training courses and goals. We can call the normative qualification elements surplus qualifications for the development of a country, its enterprises and trainees.

Qualifications lead

We must account for changing trends in current requirements. Imparting surplus qualifications in industrial-technical projects as part of vocational training assistance for emerging economies is in fact standard, because a declared policy goal is to take industrial-technical abilities beyond the present level in the emerging nation. The activities analysis and empirical qualifications analysis ensure that the qualifications lead over the national standards is not over-large and that the reference point is the emerging nation and not the industrial country.

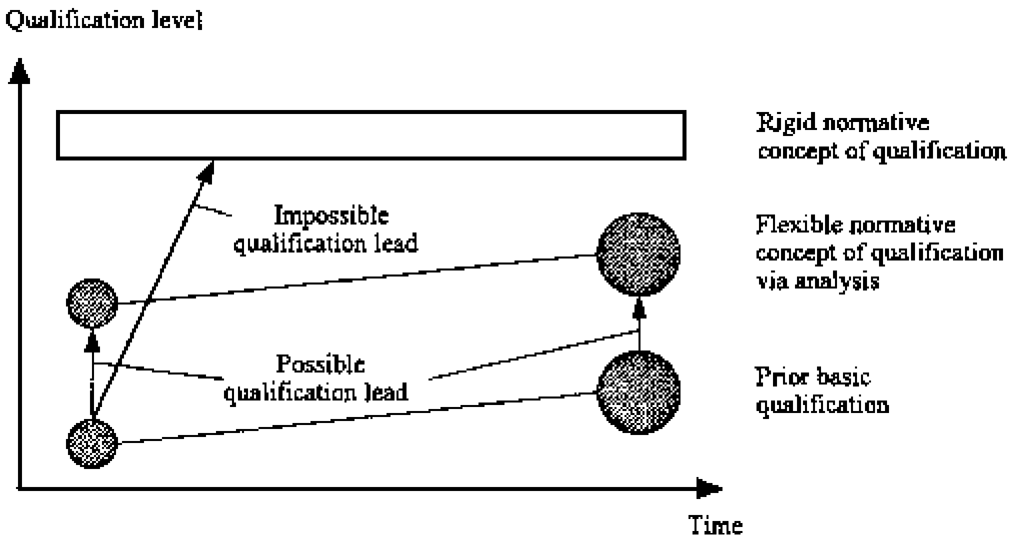

Figure 9: Normative and empirical notion of qualification

Whereas we in Germany assume that qualified trainees will be able to keep pace with technical advances in their working conditions thanks to surplus qualifications, qualified trainees from vocational training development projects are often faced with having to adapt in the reverse direction (as compared with the qualifications they have acquired) to less advanced working conditions (within certain temporary limits). This ability to adapt is crucial for the qualification potential of manpower.

At the end of the qualifications analysis the empirical qualification cross-sections must be collated with the normative definition of qualifications to obtain the necessary change in existing working conditions. For stockkeeping, we finally have a clear overhang in the normative qualification elements compared with the actual qualification, though we must keep these in proportion (otherwise we can simply choose a textbook, which would be of no practical use to the learners). Collating the two qualification elements in our stockkeeping example gives the following key knowledge areas:

- Organizing receipt and inspection of materials
- Recognizing link between type of good and stockkeeping technique
- Recording outgoing goods
- Introducing stock files
- Recording inventory changes and indicating reorder points

With this qualifications list, we then proceed to the next planning steps and break them down in more detail.

Though we shall not develop them in detail here, similar qualification lists result from the other areas of the work activities analysis.

1. Management
2. Procurement
3. Stockkeeping (as an example)
4. Production/service organisation
5. Sales

Qualification lists
Training modules

With this method we finally come to business training modules for technicians that centre on the five listed operative functions. Reading these qualification lists we see the need to supplement the function-oriented lists with interfunctional qualification lists. These stem from the interfunctional qualification elements such as bookkeeping knowledge (needed amongst other things for inventory accounting, related here then to the function-tied qualification list for inventory), knowledge in pricing and costing, knowledge in finance and auditing, knowledge of legal provisions. Altogether we arrive at a set of 10 to 12 business training modules under our curricular conditions. They will need to be adapted more closely to the specific training conditions for technicians in business areas in a specific country and specific government approved trades, the closer we finally come to teaching and training planning in keeping with the curriculum.

4th planning step: Preconditions analysis

In the 4th planning step we look at the preconditions for supplementary business training stemming from organization of the industrial-technical training project and the prior education of the trainees.

Let us recall three principles:

1. The original project approach - to impart industrial-technical qualifications - must not be jeopardized.

2. Keep in mind that we are offering supplementary training as a flanking measure to improve employment prospects on the labour market for industrial-technical qualifications or in other occupational sectors.

3. Do not allow the business training, which is essentially a supplementary qualification, to become a self-sustaining separate project in the minds of the trainees, in the planning of the executing agency or project staff or in the teaching.

Organization of the industrial-technical project

The point of departure for thinking about instigating supplementary business training is the industrial-technical project and its training courses. We recall that close links exist in micro, small and medium-sized enterprises between the technical, administrative and market operations and there are accordingly suitable openings for supplementary business training. So we must examine our industrial-technical training courses to find out whether they are suitable as a 'peg' for supplementary business knowledge in procurement, sales, stockkeeping, production and services, etc. Here we come across distinctions largely stemming from the organization of the industrial-technical project (full-time vocational school with workshop training, full-time vocational school with workshop training and limited market links, vocational production school, basic vocational training for dressmakers, etc.). The organizational form decides on the openings for an integrated supplementary training. These are basically greater in a production school than in a 'normal' full-time vocational school.

Let us illustrate this with an example: If during training for electricians, motor-vehicle technicians, joiners, bricklayers in a full-time vocational school with workshop training after the first two years of a course-type occupational theory and practice training, products, technical and repair services are sold on the market or made use of in the school, we have got suitable interfaces for business training. Having the school rooms extended and renovated by the trainees in the third training year or car repairs in the school workshop for customers afford many interfaces to integrate business learning topics such as construction and repair costing, procurement and stocking of building materials and inventory costing, imputed costs, handling and planning orders, etc. Obviously, the relevance to production, market and activity particularly from a motivation standpoint makes sure the trainees see the practical utility of business topics and learn them.

Strong points of production school training

Production school training has a number of clear advantages:

• It is geared to procurement and sales.

• It is geared to prescribed national standards (technical, business, management).

• It is geared to activities in relation to work and learning objects?

• It adopts a holistic approach to technical, business and management activities.

• It is geared to a rational organization of work and marketing and provides criteria for selecting suitable activity blocs and topics.

• Work is linked to learning.

• The training fosters self-reliance in the trainees (elements of self-organization of work and learning).

• The production school is a model for later occupational activities and thus facilitates the transfer from learning to applied reality.

Project-type business training

We have listed the strong points to point to the basic principles governing supplementary business training - regardless of the organizational form of industrial-technical training. For all types of organizations we propose conducting the business training as a project. For this we need to establish the necessary organizational conditions for the industrial-technical training which is run as a course in theory and practice. These are project elements suitable for combination with the supplementary business training. The systematic imparting of business knowledge and patterns of activity should in turn be geared to this by having the systematic phases culminate in such a project. On the other hand, the search for suitable intersections for supplementary business training and its combination with the industrial-technical project should not be confined to productive or project-type training phases. All phases of the industrial-technical training should be examined to see if they can be combined with supplementary business training, including workshop and theory courses. (More on this in the planning phase: learning organization).

Role of government-approved occupations

The government-approved occupations (trades) also play a major role in the project. To be of practical use, the supplementary business training topics must link up with these. It is wrong for supplementary business knowledge to ignore the marked practical differences between an electrician costing the production of an electric cooker, a carpenter working out the costs of a roof and a motor-vehicle mechanic itemizing the costs of new brakes. Business training is making a serious error when it reverts to imparting a diluted, abstract costing system. Of course, the CWG must see whether certain basic business knowledge must be imparted in an inter-occupational course before specializing into occupations, but the basic point remains: the CWG must vet business training and its prospects in the project from an occupational standpoint. If it fails to do this, the opportunity for practical business training in tandem with technical training will be lost.

Trainer tasks

In this phase we also need to allocate clearly defined tasks to the trainers. The basic decisions taken in the organization of curricular work must be specified. The necessary platform for this has been built in the previously described preconditions analysis at curricular level (project possibilities). We can now estimate the overall need for supplementary training and in what areas we can start developing modules in line with the requirements in the industrial-technical training courses. This step is important to prevent business planning from going off on its own and lapsing into the traditional pattern of business course planning. Typical for this kind of planning attitude is to proceed from business decisions at management level and then turn to individual functional areas (procurement, stockkeeping, etc.).

In view of the different training courses, it is not easy to match up the different preconditions. One option is to locate the business training in the third year, draw on the acquired technical knowledge, couple it with business knowledge and prepare an integrated project. This basic decision makes sure the industrial-technical training course and its preconditions exert a formative influence on the curriculum. This also pre-shapes the work of the business experts, who in turn must allocate tasks in the team (e.g. a European businessman familiar with the country and two local teachers). The work assignment will of course depend on the abilities of the local teachers. We have found that the national standards of business training and methods play a major role in drafting the business curriculum. They pose almost insurmountable barriers (e.g. a kind of arrogance that clings to basic knowledge) and interventions must be continually made here. This holds for practically all planning up to the teaching stages. The most effective way to do this is for the industrial-technical project side to point out the very tangible interests of the project in supplementary business training.

Prior education of trainees

Lastly, we also need to assess the prior education of the trainees. A good general education is more conducive to grasping more abstract business topics which call a certain degree of imagination. Where the level of prior education is low, it is all the more important to gear business training to industrial-technical practice and conduct it in a straightforward way in line with the project.

5th planning step: Business didactics analysis

Business didactics as an aid
Danger of business

In planning step 5 the CWG turns to business didactics and its suggestions for designing business learning processes. It is natural for us to look for assistance here to perform our curricular task. Business didactics deals with the question of what business topics are important for business training and further training and how to arrange and present them for effective learning. What we have to answer for our technical-business curriculum project at the particular level it tries to answer at the more general level. However there are many kinds of business didactics. Amidst the (endless) range of options, we can pinpoint two criteria to help develop a supplementary business curriculum. First, you must assign business knowledge and activity patterns to a typical level of activity and second you must keep to the sequence we developed in the previous planning steps: scale of enterprise - industrial-technical training - interfaces between technical and business aspects - business activity requirements - business training topics. This will make sure that when we turn to business didactics and the underlying economic theory we are not overwhelmed by the broad array of major topics, otherwise the curricular decisions already made (planning steps 1-4) will be ineffective. This is why it is important to recall the findings in these phases: they are the reasoning behind the project requirements of business knowledge and activity patterns.

Specifics of business activity
Danger of abstraction
Levels of business activity

Now what in short does the CWG need to remember about the specifics of a business activity? Unlike physical production and repair, business activity is of its nature intangible. As it does not result in a tangible object (costs, efficiency, profit are symbols), there is a danger of business teaching getting stuck at a symbolic-abstract level, over-generalizing and losing touch with the real, tangible objects and work activities in the industrial-technical sector (costing with fictional figures for example instead of calculating the costs of manufacturing a product). Business training must therefore always link back to real processes. This is also necessitated by the basic nature of business activities: business activities is the abstract presentation of real activity sequences in material procurement, production, repair, stockkeeping, etc. by collecting and recording data, organizing, collating and interpreting data, processing data to information, evaluating, working out alternatives and taking decisions. This process can be broken down into different levels of business activity structured bottom up. The levels of activity are important for ordering our curricular planning and as a selection yardstick for business knowledge: obviously our curricular project seldom encompasses all levels of activity.

1st level of activity: Business routines

This level pertains to recording, collecting, organizing and collating certain data. These are straightforward activities such as writing vouchers, orders, offers and bills, making entries into accounts, keeping inventory records, recording work times and calculating pay, etc. The output at this level is the indispensable basis for business activities at the next - planning and decision-making. Practice-centred training such as the dual business training in Germany usually starts at this level, but often fails to link up with business reality and the subsequent levels.

2nd level of activity: Ongoing business decisions

These are decisions closely connected to daily business routines, such as reminders, setting delivery dates for different customers, checking inventories and stocking. As these activities call for a basic knowledge of contractual law and mathematics to calculate the rate of inventory turnover, profit or loss on interest, much of this level is the subject of training theory (which in turn is conducted in training practice in schools in nearly all countries with no practical relevance and often divorced from the routines level).

3rd level of activity: Directing decisions

This level is where largely medium-term decisions are taken such as a company's general payment and delivery terms, payrolling, production lots of an article, choice of supplier, basic costing. This level is usually only imparted in training measures outside the practice-centred initial vocational training.

4th level of activity: Constitutive decisions

This level has to do with all questions of setting up a business and long-term management such as decisions on location, range of products, finance, outlay for fixed assets, personnel. This level is only dealt with in theory, but is often accorded inordinate importance in training partly because of the frequent abstract bias of academic business economics.

Matching up with the goals of industrial-technical training

Selecting suitable levels of activity

We now turn to selecting suitable levels of activity of later relevance for the qualified trainees of our technical-business curriculum and training projects. This is useful to reduce the circle of business knowledge and activity patterns. We also include the levels of industrial-technical work activities here to highlight the parallel relations between technical and business levels of activity for our target group.

Technical training usually starts at the level of basic technical skills (level of technical routines) to proceed in a subsequent step to specialist training for qualified skilled workers or craftsmen such as industrial mechanic, electronics technician or electrician (we call this the constructive-productive level). Then comes the training as foreman or master craftsman (= productive-planning level). This can be located at the constructive-productive level but is not a direct qualification goal. The same holds for the higher level of engineer (level of technical development). If we compare these intentions of technical training with the business level of activity we see that GTZ training projects with integrated supplementary business training are each situated at the lower two levels of activity.

The following figure will illustrate this:

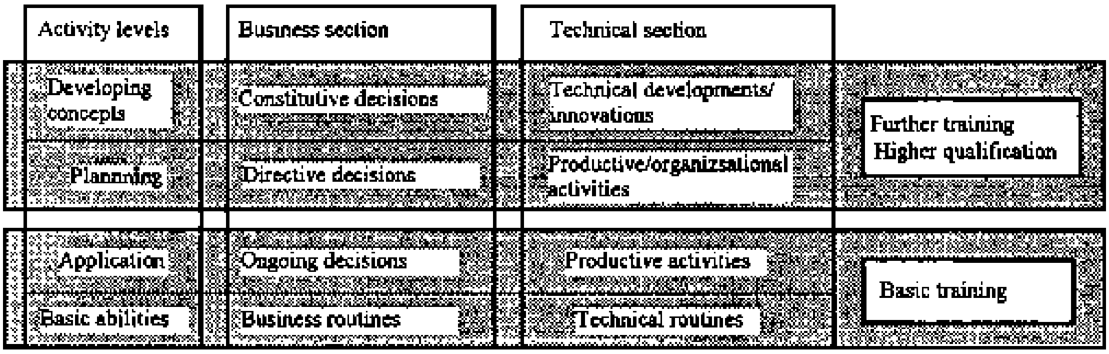

Figure 10: Parallel relationship of business and technical levels of activity

Activity process as training subject

This figure shows that it makes no sense for the technical project to stick to the level of individual skills (technical routines) and training modules in the supplementary business training for example to focus on imparting basic planning and decision-making ability in organizing the marketing of products and services. The supplementary business training usually addresses this level, however (ongoing business decisions). The intentions of the industrial-technical training must also coincide with this goal, i.e. impart planning and decision-making ability in technical situations (level of productive activities). Only when training takes as its subject an activity process, that is, a systematic sequence and connection of single industrial-technical activities, can we draw **a** meaningful curricular link between technical and business elements in training.

Scale of enterprise as reference point for selection decisions in business didactics

Role of scale of enterprise

Business didactics also points to a typical correlation between the role of the level of activity for the training and the scale of enterprise. We must bear in mind, though, that our target group must in part be enabled to enter self-employment after passing out in the form of a small or micro enterprise. So we should not lose sight of the level of constitutive decisions **as** a (secondary) perspective. It is more important, however, to impart basic knowledge of modes of work at the lower levels since these are prerequisites for running **a** business properly and securing its medium-term survival. This is also therefore our starting point for developing a supplementary business training module for technicians/craftsmen.

Beyond this basic decision we must again call to mind here the curricular decisions of the activities, qualifications and preconditions analyses and link these with business didactics issues (what activities and knowledge are important for the business sector by scale of enterprise). If we collate these findings we obtain the following matrix based on the previous curricular decisions (concentration on micro, small and medium-sized enterprises):

Scale of enterprise	Medium-sized enterprise	Small and micro enterprises
Goals of vocational training assistance	Enhancing or developing national competitiveness by promoting medium-sized business, especially in product quality and innovation, Raising market opportunities Economic stabilization of enterprises and market relations	Developing market structures by founding and extending businesses, Promoting product development, Systematising and enlarging production
Goals of technical training	Training and further training of skilled workers and master craftsmen largely activity fields and industrial areas important for national development and national industrial areas, Level: improvements geared to qualification levels and patterns as in the industrial nations	Training industrial-technical skilled manpower at appropriate level with pronounced regional accent
Major technical-business interfaces	Organization and administration combined with strategic production planning geared to procurement and sales markets	The entire management of the enterprise
Business activity requirements	Ability to organize and control the systematic recording of production data and help evaluate production, procurement and sales planning	Ability to set up a simple business administration to monitor finances, inventory, procurement and sales opportunities, negotiate procurement and sales and acquire and evaluate market information for product design and production development
Integration zone: Business training topics	Basic business organization and management, production data collection as part of production planning and procurement and sales organization, techniques of production development, quality assurance and maximizing production efficiency	Basic bookkeeping and financial planning, inventory, basic commercial correspondence, locational planning, production planning, cost control and costing, techniques of market surveillance and advertizing, basic contractual, employment and fiscal law

Knowledge items

Accounting for the completed curricular planning steps - in particular scale of enterprise and integrating technical and business training - the business didactics findings in combination with prior planning steps bring us to the conclusion that the business training modules for small and micro enterprises must centre on the following basic knowledge blocs:

- Basic bookkeeping
- Finance and financial planning
- Inventory and inventory planning
- Basic commercial correspondence
- Market surveillance and advertizing
- Production planning, product development, product improvement and quality assurance
- Locational planning

• Procurement and procurement planning

• Basic business organization and management

• Costing, pricing, calculation

• Basic contractual, employment and tax law

These are the knowledge blocs in business didactics that belong to the basic knowledge inventory. Their 'inner' design should not, however, be detached from the design criteria described in the curricular activities and qualifications analysis for a supplementary technical-business curriculum. This is the reference line to medium-sized, small and micro enterprises and the link between abstract business knowledge and activity patterns with real industrial-technical processes.

Construction faults when designing business training modules

For the internal shape of the training module business didactics proffer some more important pointers that are decisive for the effectiveness of learning business topics. Above all our business didactics is opposed to imparting highly abstract business knowledge (as is unfortunately usual in almost all countries under the influence of academic business economics. This applies in particular to emerging economies which emulate this 'theory syndrome' which is underpinned by business teachers who have usually only been trained in 'theory'). The CWG should therefore always account for the following business didactics principles when designing curricula and learning aids and constructing the business training module, because they are vital to the effectiveness and practical utility of the supplementary business training. You need to avoid the following construction faults when developing business training modules.

Fault 1: Gearing the topic routes to all kinds of lists

Terms as compressed knowledge
'Remobilizing' concepts/terms

Economic/business topics tend to ossify in concepts and terms and tread the same old paths. A job of learning, though, is to call the established system of terms and definitions into question and remobilize it. Terms/concepts are highly compressed knowledge, but we must ask what activities have shaped them or are included in them in compact form. The term 'internal finance' for example comprises a host of financial activities and decisions. So there is no point just detailing such terms in training modules and teaching: internal finance is broken down into equity finance and internal generation of funds, etc. etc. What, though, do we mean by remobilizing a rigid structure of ideas/terms? Let us imagine terms/concepts as compressed structural images of business activities that have come about or have 'grown' out of a chain of activities.

Rigid didactics

A useful metaphor is the passage of the seasons. In spring we sow, in summer the crops ripen and in autumn they are harvested. There is nothing wrong with ordering the harvest in the barns and making an inventory but when the harvest is continuously ordered and recorded in new lists/indices (classifications, checklists) all we are doing in this kind of business didactics is looking backwards and rummaging about in lists, our approach is stationary. We do not ask about the genesis of something, what activities brought it about, what it is for, what conditions have to be met for something to come into existence. Ordering concepts/terms is like sorting cans by shape and label, etc. How the contents got into the can, how it was processed, what it is for - these questions are not posed. This is what we are driving at with the image of a rigid didactics of autumn. Economic theory teaching follows this pattern in almost all countries and orders concepts/terms in classes, checklists, advantages and disadvantages, arbitrary interrelationships and tends to make distinctions beyond the immediate teaching goal depending on what it has 'in stock'.

So we propose looking first at economic/business reality, activities, genesis and use and then at terms and concepts. The terminological/conceptual order is the outcome of reflection on economic/business operations, never the beginning. Economic/business theory should therefore not centre around terms and concepts.

Fault 2: Methodological window dressing

Faced with ossified topic structures, we reach here for the 'helping hand' of methodological presentation techniques to arouse the interest of the learners. We use interesting or amusing lead-ins to make the frugal fare of abstract concepts more appetizing. Improving topics must therefore go hand in hand with method skills. Otherwise we are just filling new bottles with old wine.

Example:

Wage negotiations are being simulated with role play. After half an hour, the teacher stops the game and explains what pay scales look like and how the role players fit into these.

The role play could however continue by asking the trainees to find differences between the role players and draft their own pay scales.

These could then be compared with the teacher's system.

Fault 3: Insufficient account of learners' experience

'Remobilizing' cognitive structures

As well as remobilizing the teaching topics we also have to 'break up' the cognitive structures of the learners. To overlook this is a serious fault because it is based on the misconception that we can teach the trainees the new information by simply 'overwriting' the existing (naive) structures in their minds like on a computer disk. It is not enough to proceed from a vague idea of learner experience. Rather, we have to get to know the learners' cognitive patterns while teaching and find out what images and screenplays colour the ways they already interpret economic/business processes. Only when we as teachers cater for these patterns will the trainees make learning progress which will also have a meaning to them.

In short: learning = experience + information.

Fault 4: Lack of economic/business expertise

If most of what a teacher/trainer knows about a subject is to follow the topic routes in the school text books, he/she will not be able to do much more than slavishly obey the curricular instructions and rigid patterns in the learning aids. Only when we have a clear picture of the subject can we ask the right questions. For example: Why does the standard approach to 'customs duties' confine itself to a definition (fiscal charges on imported or exported merchandise), classifying types of duty and perhaps compiling the documents to be submitted to the customs office? Does this help us to understand how domestic markets come about, do we grasp why and when customs duties came to be levied in all the different nations and the general social and political models they are based on? Do we appreciate the countless difficulties and distortions involved in reforming or abolishing the international customs system? If you feel these questions overstep the mark, you are forgetting that every subject gives rise to countless topics. No curriculum obliges us to reduce customs duties to a set of definitions and categories!

So we advise the readers of our guide to think about the economic conditions and practice in their country so as to lay the foundation for sound, realistic teaching.

Recap

The CWG must return to these business didactics pointers for developing learning organization - topics and method. The curricular planning so far is pointless if the CWG makes the same construction errors when developing individual modules and builds an abstract prefabricated European house. Our job is not to assemble imported, highly specialized ready-made components; we have to find, process and shape local building materials and build a house with a national architecture. The craftsman needs suitable materials and tools for this and the businessman national information and forms (job time cards, inventory record cards, settlement sheets, accounts...). We have to make sure these are suitable.

6th planning step: Goal and learning goal analysis

Planning principles

Decision fields

At this point the CWG enters the (three) decision fields of curriculum development. It now has a pattern sheet with sharp enough contours to cut out the basic curriculum pattern. CWG proceeds from the rough topics developed, supplements them if necessary as it goes along and assigns to them learning goals to determine the level of learning processes. For this it draws on the findings of the business didactics analysis.

In this planning step remember not to detach the rough learning goals and rough topics from the order established so far. It would be a great step backwards for us simply to sort through the supplementary business training areas and allocate learning goals to them, think up a system that proceeds from the enterprise to the departments and workplaces and their work activities. In the curricular planning steps so far we have adopted another organizational pattern, that we have to account for here. When developing rough learning goals and topics we must recollect three sets of facts that form the decision-making parameters for subsequent development steps. The three determinants of our rough planning are:

Determinant 1: is the curricular goal, 'Making business plans and decisions in industrial-technical work situations'. This obliges us to determine more precisely the kind and scope of business topics in relation to technical training.

Determinant 2: is the scale of enterprise - medium-sized, small and micro enterprise (see planning step 5: Scale of enterprise as reference point for business didactics selection decisions). Here we had pinpointed the key business blocs for a curriculum:

- Basic bookkeeping
- Finance and financial planning
- Inventory and inventory planning
- Basic commercial correspondence
- Market surveillance and advertizing
- Production planning, product development, product improvement and quality assurance
- Locational planning
- Procurement and procurement planning
- Basic business organization and management

• Costing, pricing, calculation

• Basic contractual, employment and tax law

Levels of activity 'routines' and 'ongoing decisions'

Determinant 3: are the levels of activity - (a) the business routines and (b) ongoing business decisions. This is where we determine the level of learning processes. We had also established that the level of activity of the directing and constitutive (structural) decisions for supplementary business curricula do not play a significant role in our framework, but that some elements need to be extracted so to speak to support micro enterprise startups. Basically this can be done by supplementing the levels of activity 'routines' and 'ongoing decisions' in the modules.

These two levels of activity mean for our training module that the CWG goes through two runs in the above topic fields, the first at the routines level, the second at the ongoing decisions level. This is why there are usually two modules (or several depending on the scope of the supplementary business training): the module 'booking' at level 1 and 2, distinguished by the level of learning goals. This gives us an adaptable modular system that can respond differently to different target groups.

Learning goal decisions

Danger of 'learning goal tinkering'

Here are some points on the learning goal decisions the CWG now has to make. Learning goals are statements on the level of learning process we are aiming at. They link topics with learning achievements. Should the trainees simply know about inventory or should they be able to plan it? This makes a difference of course and calls for organizing curriculum learning processes with different key topics at different learning levels. So wording learning goals is not just playing about. On the other hand, there is no area in curricular discussion where the 'curriculum experts' have been as zealous as in their search for suitable learning goal formulas. This has resulted in a goal obsession in curriculum development (learning goal tinkering). We should not, however, flush out the baby with the bathwater. They are and remain important prior information on what awaits the learners. They are landmarks but they forfeit this function if we define too few or too many. We need to find the right measure. Learning goals are also major signposts for the learning aids developer and for assigning topics and tests.

When organizing learning processes in the occupational area we need to keep an eye on the link with occupational activities to avoid developing abstract learning goal systems measured against some criteria of completeness. When defining learning goals the CWG should keep to the basic qualification areas demarcated in the qualifications analysis. This will (1.) make plain that learning goals are intended qualifications and (2.) link up with occupational activity fields. We can order this as follows:

Work role and sectors	Requirements	Qualifications	Learning goal area	Learning goal level
Functional	Workplace	know	Cognitive	Level 1
		execute	psychomotor	No level
	Work organization	know	Cognitive	Level 1
		compare		Level 2
		assess		Level 3
Extra functional	Mental occupational potential	compare	Cognitive	Level 2
		assess		Level 3
		analyze		Level 4
		plan		Level 5
		judge		Level 6
		decide		Level 7
	Work qualities	diligence	Affective	No level
		punctuality		
		precision		
		sense of order		
	Attitudes	Work interest	Affective	No level

Affective learning goal area

This of course is not a perfect model, but no system like this is an end in itself. This model does what it is supposed to do in developing a business curriculum: to link business work requirements and the requisite qualification and learning achievements. For business requirements (unlike technical ones) it makes no sense to work with a deeper skill hierarchy (filing, booking, recording, etc. do not pose special skill requirements, so lets keep to one level. That is enough.). We would be tinkering with learning goals if we broke down the affective learning goal area any further. Let us stick to the everyday meaning of the notions such as diligence, motivation, etc. We are not trying to find out whether the work qualities are supposed to be imitated, internalized or accepted in learning to define related graded affective learning goals. This far exceeds the scope of a supplementary business curriculum. This calls for organizing far longer learning processes. Let us pay attention to precise and reliable bookkeeping, let us foster work motivation when teaching - without overstretching supplementary business curriculum in this area.

Cognitive learning goal area

It only makes sense to make a detailed breakdown in the cognitive learning goal area, because this is where the main area of business qualifications is located. We have used everyday language and avoided complex terminology like reproduction, reorganization, transfer, etc. The advantage of this is that a learning goal like 'compare your own price with competitors' is always easy to understand. Another advantage is that we can save the trouble of translating terms like transfer, etc. The CWG is however free to extend the list of learning goals but beware of 'overloading'.

Framework curriculum for supplementary business training

Rough learning goals and rough topic structure of business training module

With the tools developed, the CWG can now define the rough learning goals for the training modules. It is important here to collate the technical reference point (as far as possible) with the business learning goals and the corresponding topic blocs. (We no longer give reasons for where the learning goals fit into our matrix but of course keep to the wording and assignments proposed there.). The CWG must now organize the work steps in the following way; the modules may need to be altered slightly or supplemented.

	Run 1: Module with focus on business routines level	Run 2: Module with focus on ongoing decisions level
	Module 1.1 Basic costing and planning	**Module 1.2** **Preliminary costing**
Reference point	Technical drawing and parts lists	Technical drawing and parts lists
Rough business learning goals:	The trainees should know and assess quantities (material input: individual materials, ancillary and operating supplies) based on planned output/repair and enter these in a systematic list	Based on a new product, the technical drawing and parts list and in consultation with the trainer, the trainees should jointly plan a systematic cost estimate sheet, fill it out and judge it.
Rough topics	Parts list (quantities), product parts, number/quantity per unit, planned output, total requirements	Preliminary costing of material requirements (quantity cost structure)
	Module 2.1. **Procurement planning**	**Module 2.2** **Procurement planning/vendor card file**
Reference point	Materials technology and technical-qualitative product requirements	Materials technology and technical-qualitative product requirements
Rough business learning goals:	The trainees should know and compare customary procurement sources and be able to draw up a list of alternative suppliers (delivery times, quality, prices, terms of payment)	Based on the information obtained in Module 2.1, the trainees should draw up a vendor card file, assess other supply sources and extend the file. They should judge supply options based on the file.
Rough topic	List of suppliers	Vendor card file and decision on supplier; decision criteria such as: • Availability of material • Quality • Price • Transport facilities
	Module 3.1 **Financial planning**	**Module 3.2** **Finance**
Reference point.	./.	./.
Rough business learning goals	The trainees should know and compare finance requirements for procurement or instalments and compare possible sources of finance (e.g. judge the necessary advance payment by the customer)	Beyond the local types of finance (cash), the trainees should know and assess kinds of finance (current account, loan, bill of exchange, etc.). They should also combine basic legal aspects with these (lending law, securities, formal provisions, etc.)
Rough topics	List of sources of finance	Types of finance - decision on finance Decision criteria such as: • Interest • Term • Securities
	Module 4.1 **Purchasing**	**Module 4.2** **Purchasing**
Reference point:	Materials technology, parts lists	Material technology, parts lists
Rough business learning goals	The trainees should be able to plan a simple order form with the main order data (quantity, prices, quality...) and handle the order	Know basic law of contracts and judge and handle non-performance problems (delay in delivery, quality defects, etc.)
Rough topic	Order form	Purchase terms and conditions (legal side); buying order list
	Module 5.1 **Stockkeeping**	**Module 5.2** **Stockkeeping**
Reference point:	Material technology, stockkeeping techniques	Material technology, stockkeeping techniques
Rough business learning goals	The trainees should judge stockkeeping requirements in relation to the good (e.g. wood), plan inventory needs and keep inventory records for individual material and goods categories	The trainees should know and apply organizational principles of stockkeeping e.g. incoming merchandise quality inspection, delivery receipts (quantity discrepancies), inventory status reports, removal from books with material orders, inventory

	Run 1: Module with focus on business routines level	Run 2: Module with focus on ongoing decisions level
Rough topic	Inventory records	Physical inventory/reorder point; inventory audit; decision on ordering
	Module 6.1 **Booking**	**Module 6.2** **Booking**
Reference point	./.	./.
Rough business learning goals	The trainees should know the first accounts (inpayments, outpayments, inventory) and book payments to date	The trainees should judge the functions of other (project-tied) accounts, such as liabilities, receivables, cash, fixed assets, rents, energy costs and open and make entries in accounts. The accounts should be closed and a profit and loss statement prepared.
Rough topics	Lists of inpayments/outpayments/cash	Breakdown of lists in accounts/booking/closure; drafting a financial plan for following month; where usual and necessary, the topic of taxation can be dealt with.
	Module 7.1 **Production/repair times and materials usage**	**Module 7.2** **Recording production process, repair planning, production/repair times and material usage**
Reference point	Production process, repair	Production process/repair
Rough business learning goals	The trainees should draw up time cards and record and analyze the effective working hours/unit and time off	The trainees should assess and judge the possibilities for division of labour, plan a production sequence, assess how to record times for individual work steps and record material usage.
Rough topics	Production records, time card (time record), materials record (materials order)	Production schedule (planning labour input, availability of materials)
	Module 8.1 **Production costs and pricing**	**Module 8.2** **Production costs and pricing**
Reference point	Product/repair	Product and production process/repair and repair process
Rough business learning goals	Based on the data acquired in the modules so far, the trainees should plan a simple cost estimate sheet and specify the production price of their product or repair job. The trainees should enter a profit mark-up and set a final price.	Based on Modules 7.2 and 6.2, the trainees should draw up a complex cost estimate sheet to include all costs of production and repair. Based on experience (Module 9.1.) they should specify the profit mark-up/wages of management with reasons.
Rough topics	Cost estimate sheet based on cost categories (material, labour, ancillary supplies)	Enlarging the cost estimate sheet with indirect costs such as depreciation, rent, energy; decision on planned sales price, repair price
	Module 9.1 **Marketing and efficiency review**	**Module 9.2** **Marketing and efficiency review**
Reference point	Product	Product
Rough business learning goals	The trainees should find out local sales points and be able to determine prices of comparable products. They should compare their sales price with other market prices, judge these and decide on a final price.	The trainees should know marketing strategies (incl. forms of cooperation in tapping markets) and know and judge ways of pricing and designing products. They should also know the options under the law of contracts and handle non-performance problems. (Module 4.2.)
Rough topics	Sales list, catalogue	Market strategies, sales channels, customer records; decision on sales terms according to criteria such as: • Price • Mode of payment • Transport and delivery

We now have a framework that needs detailing and breaking down into a learning organization plan.

7th planning step: Learning organization

Learning organization tasks

In this planning step the CWG has three jobs to do:

1. Decide how to organize the business training in connection with the technical training

2. Decide how to give detailed shape to the goals and topics specified in the module system (training plan)

3. Direct the training and teaching process by developing learning aids

What is the thinking behind learning organization?

With the rough learning goals and rough topics we now have an outline of the planned supplementary business curriculum. It is roughly synchronized with the industrial-technical training. Now the CWG has to decide on learning organization (fitting the business training modules into the learning organization of industrial-technical training) and at topic level move on from a rough analysis to a detailed analysis: definition of detailed learning goals and detailing of learning topics. We progress from the rough analysis a detailed analysis.

Linking training modules

The design of the individual business topic blocs was already modular at the rough curriculum planning level. Training module linkage is based on a three-pronged principle:

1. Running through at two or more levels that contain similar topics but differ in terms of difficulty. This caters for the routines level of activity and the ongoing business decisions level.

2. A process-type structure. This of course means that the technical training also involves an activity process, i.e. a systematic sequence of single technical activities, at least at some point. This can be a production or repair job. This is an appropriate point to introduce the supplementary business training with its process-type structure.

3. The implementation of the supplementary business curriculum must be closely synchronized with the technical training sequence.

This rules out other learning organizational decisions such as the combination of two levels of difficulty in one module (combining the 1st and 2nd levels of activity) or proceeding from an overall view of the enterprise to its individual functions and workplaces. There are good reasons for proposing this kind of learning organization.

Reference points for business training in the industrial-technical training course

The business training module should link in with a sequence of production or a technical service. Of course, something is produced or repaired on order. Since however technical training and its learning organization must be treated as given and the necessary technical knowledge and skills for producing a product or providing a repair service must be imparted beforehand, at the start of the supplementary business training we leave aside for learning organizational reasons the relatively abstract task of soliciting an order and assume that the order has been placed. So our supplementary business training locks in parallel to the technical process of production pre-planning or planning for a technical service. The technical reference point for the first business training step therefore is the technical drawing and the parts list.

At this intersection and in the following training steps we remain at the business routines level. Proceeding from basic costing (quantity planning), we then look at procurement and stockkeeping and booking these procedures, production scheduling and sales preplanning. The 2nd run is more concerned with decision-making in business situations (level of activity of ongoing decisions). Here too, the connection to the technical project should be close in terms of topics and time, but now the activity outcome of the 1st run is reviewed, supplemented, evaluated and extended with business background knowledge.

The business training module

The module sequences can be depicted as follows:

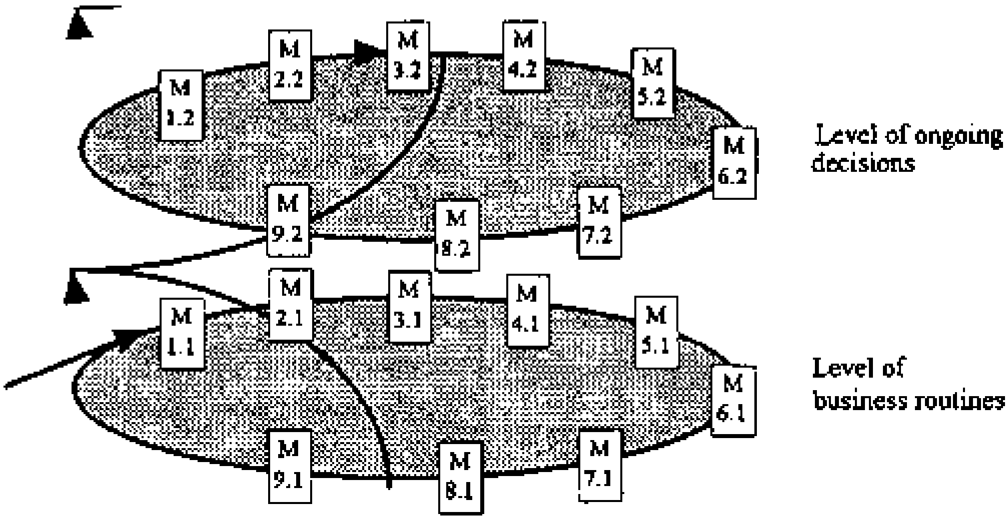

Figure 11: **Flowchart of business modules**

Internal structure of modules

Basic learning organizational structure of training modules

Using a module we shall briefly illustrate basic learning organizational structures: in this architecture each module (rough structure) always centres on a rough topic that is broken down in more detail in the different runs. For example, Module 1 centres on 'costing'. In the first run Sub-module 1.1. comes into play. Under guidance the trainees are supposed to cost material quantities and classify these in a system. In the second run Module 1.2. is applied. Here the trainees have to deal with material quantities on their own. In addition they must valuate and then pre-cost the quantities. The second run then deals with a more complex activity; at the same time the rough topic of the first run is taken up again. So the knowledge from the first run is repeated, refreshed and competence is enlarged through the evaluation.

The role of the modular sequence

The training module profiles and their sequence furnishes the CWG with an 'ideal' plan. When the CWG now proceeds to detail the learning organization, certain changes may prove necessary: e.g. leapfrogging individual modules or switching levels. The 'master plan' retains its guiding role, because it helps to gauge the coherence of our own planning. The 'master plan' will not solve all planning problems, but it is a way of assessing and guiding our own planning.

Decisions on learning organization

Decision on timespan for business training

The CWG must first agree on the timespan of the business training. Many factors affect this decision: goals and scope of business training, extent of technical training, learning level of trainees, qualification of available teachers, willingness of businessmen and technicians to cooperate. These factors are often bound up with definite interests which mean that decisions are frequently taken on planning problems to safeguard personal or group advantages and not for curricular reasons. If the business training programme has to be limited for lack of time, it is best to retain the coherence of a run-through at one level at least (Run 1) while adding some more advanced modules from the Run 2 level. This will preserve the functional coherence of business activities with each other and with the technical side as envisaged in the modular schedule. Clearly, precedence should be accorded a genuine integration of technical and business training. This implies that the supplementary business project really does enter the picture when the technical training departs from the level of imparting technical routines and begins imparting productive activities - as proposed. That means that the supplementary business training intersects where the trainees can manufacture products or carry out extensive repair work.

This gives us a schedule over a lengthy training phase that begins at a later point in the technical training. Another option would be to insert a project phase into the technical training. In this case, however, we must make sure that the production or repair does not simply proceed in line with the technical logic and the business training is felt as a disruption. This is why it is important that planning in the technical sector from material procurement, to preliminary costing, scheduling, work organization, billing, sales, etc. is always extended to include the business side. We must ensure that the learners repeatedly step back from the activity and reflect (e.g. via teaching) to gain a clear picture of the scope of their activities and their economic value. The worst case option is simply to draw a theoretical link to the industrial-technical side of the training (parts lists for example) and then impart supplementary business knowledge in a compact teaching course at the end.

The training plan and developing detailed learning goals

Developing a training plan

Now it is important for the CWG to develop a training plan for the supplementary business training based on the master plan. This training plan must detail the modules (detailed goals and detailed topics).

For this, the CWG must proceed from the rough learning goals and rough topics of the framework training plan, like the ones in Module 8.1.

Module 8.1	**Production costs and pricing**
Reference point	Product/repair
Rough business learning goals	Based on the data acquired in the modules so far, the trainees should plan a simple cost estimate sheet and specify the production price of their product or repair job. The trainees should enter a profit mark-up and set a final price.
Rough topics	Cost estimate sheet based on cost categories (material, labour, ancillary supplies)

Let us assume after detailing we have a training module in the training plan with the following detailed structure:

Detailed learning goals	Detailed topics
Know the costing system and its elements	Costing system Explanation of basic concepts and their systematic interconnection
Know, apply and judge preliminary costing methods	Preliminary costing Direct and indirect costs Cost estimate sheet
Know, apply and judge methods of profit calculation	Profit calculation Link with preliminary costing Profit terms and cost estimate sheet
Know, apply and judge methods of estimating sales	Sales estimate Checking costing data
Know and apply additional calculation aspects	Additional calculation aspects • Pricing strategies • Compensatory pricing • Pricing policy • Demand, supply and price curves • Break-even point
Judge the cost and price of a product	Practical example: producing and costing an electric cooker

All modules can be broken down like this. We need, though, to make some critical remarks on the way rough planning has been detailed here (these comments are intended to spotlight the requirements stemming from the curricular preparation and calling for changes to module structure):

The module must centre around the chapter pre-costing, profit calculation and sales estimates. It is helpful in this module to start with preliminary costing, because it entails refreshing concepts already dealt with such as material and labour costs. This should be followed by the section on cost estimate sheets, because this involves a review of the practical calculation activities (pre-costing, profit calculation and sales estimates). The additional calculation aspects brought in at the end of this module are not all necessary. Supply, demand and market price curves and break-even point analysis are too abstract and superfluous for deciding on a suitable price for a product on the local/regional market, so leave them out.

Example of project design in practice

Producing and marketing an electric cooker furnishes us with an excellent example for practical project design and gives us a real-life opportunity to examine the practical effects of technical and business activities in context as exemplified by the comparison of competitor products on the local market using price analysis. There must be openings here for checking own pricing and product design or devising a marketing strategy. Altogether in view of the short time available for supplementary business training there should be a concentration on training areas where the trainees can draw on experience when learning and as much abstract ballast as possible is thrown overboard as this is not warranted by the curricular analysis anyway and usually reflects the dictates of own earlier training.

Reviewing the learning goal structure

For this reason we must take another critical look at the learning goal structure contained in the 'detailed module'. The important thing about this module is that the trainees learn the following:

1. The price of a product depends on the costs in the production process such as materials quantities, qualities, job time

2. The different cost categories can be more or less influenced by 'business decisions' (inventory at low purchase prices, at high inflation rates/by good organization to cut labour

costs/by altering output, etc.)

3. The 'internal' pricing (costing) must be measured against 'external' pricing (product and price comparison on the local market). Here too the businessman must decide whether to produce more, what profit margin to aim for, whether he can charge the price with the help of advertizing, whether he can alter his costs by using cheaper production inputs, trading off lower quality....

It must be plain to see that these considerations are crucial to defining learning goals and will thus have a lasting formative effect on the training plan and bear fruit in problem-centred teaching. Our advice to the CWG is: reappraise the given module structure at the detailed learning goal level and select another sequence of topics.

Developing learning aids

Preparing a learning and work book

For the curricular plan it has developed so far to have a lasting effect, the CWG must now proceed to developing learning aids (however much work this may entail). Considering its capabilities, the CWG must give some thought to the quantity of learning aids to develop. The prime task is to prepare learning and work books for the trainees, the learning book to contain the topics to the modules, the work book the tasks to the individual modules that the trainees should perform. It is essential to tailor the books to individual occupations. It makes no sense for dressmakers to calculate the costs for an electric cooker and not the costs of producing a coat. This occupational relevance makes a big difference to the effectiveness of business training. Unfortunately this tie is often underestimated because it is customary in business training to use abstract figures (that are easy to calculate) and abstract people (Mrs Busy, Mr X). The learners soon get fed up with this.

So: when explaining cost categories, costing and in all practical tasks we must account for the specifics of the individual occupations. Otherwise we are in danger of losing touch with the real demands of the industrial-technical training project. The whole point of the curriculum construction chosen here will be lost if the supplementary business training fails to meet its obligations as a practically effective training by stealing away into abstractions (general cost estimate sheet, general description of costs and prices).

Developing a teacher handbook

A second major task is to develop a teacher handbook to point out the intentions of the supplementary business curriculum to teachers outside the CWG and give them pointers on how to put it into practice. The teacher handbook should contain the following:

• Intentions and goals of the supplementary business training

• Pointers to the trainees' learning and work books

• Module survey

• Demands on teaching staff

• Pointers for using the learning and work books bearing on the individual training modules

• Help on the individual modules (goals, using the learning and work books, method and media for putting the module into teaching practice)

• Pointers on testing learning achievement

The CWG will not be able to get all this work done before beginning the supplementary business training, but it is important to draw parameters for identifying the first major work steps and then decide what tasks can be performed before or during the ongoing training. It is however crucial that developing learning aids is recognized as a key task for supplementary business training activities in keeping with target-group needs and conditions, didactic specifications and special occupations.

8th planning step: Training and teaching planning

Preparation of teachers and trainers

The individual teacher must plan his/her training and teaching based on the training plan and the learning and work books. This is a basic feature of open-ended curriculum development. So we are not aiming here at developing a closed concept of teaching planning, but pointers based on the curricular design of supplementary business training. Given the specifics of an integrated technical-business training, teaching planning is about making sure that the curricular plan is implemented without tying the teacher's hands. However, the structure of the concept (see teacher handbook) requires that at least in the first runs, the teacher needs close guidance. Under this precondition the preparation of the teacher and trainer plays a major role. This also holds for the technicians in the projects (expert and local teacher and trainer). It is always help when the key persons in curriculum implementation are also members of the CWG. The CWG should therefore give thought to how to instruct the teachers for the business sector and what pointers should be given in the teacher handbook. The CWG must reach agreement on this. The learning material compiled is key to ensure that planning intentions are achieved.

The pointers on training and teaching planning should cover the following areas:

- Trainer, trainees
- Didactics
- Method
- Media

Trainer/teacher

It is important to convey to the trainers/teachers (not in the CWG) that they are not there to run a (abstract) management training course in this project and to 'lecture', that the teaching is not an end in itself, that it is supposed to provide the trainees with practical tools to deal with difficult occupational situations.

So trainers/teachers must adopt different roles in their teaching and combine these:

Teacher as knowledge mediator

For one thing teachers convey knowledge, but the CWG has 'taken over' part of this task by developing the teaching and learning aids. Major information and tasks on the training modules are available in printed form, so the teacher should focus on the practical tasks (studying the timber storehouse in a production school or carpenter's workshop from an economic/business standpoint) and provide supplementary information. The teachers mediate information around the practical tasks. They must prepare these to enable the trainees to observe in a purposive way, to support them with information in performing the task and round off the options prepared with additional information. At this level, though, the teacher will continue to play quite a central role and there is nothing wrong with this provided the teacher is conscientious in providing the trainees with further information, which must however remain purposive and not abstract and theoretical.

Teacher as organizer

As well as knowledge mediator the teacher also plays the role of organizer in problem-solving learning processes. In this role we spotlight learning organization as a teaching task. Here he/she must look for interesting lead-ins for learning and also give practical assistance in solving problems: help trainees with key questions on stockkeeping problems for example.

He/she cannot do this with lectures full of information. Instead, he/she must give the trainees the opportunity to gain practical experience or cope with a problem and find a solution, but he/she must also guide them in the process (so no group exercises while the teacher reads the newspaper) by 'taking part' at the subject matter level by suggesting productive options or leading the trainees out of blind alleys.

Teacher as moderator

On top of providing information and organizing learning processes comes the role of 'pure' moderator. In this role the trainer now keeps out of the ongoing learning process at topic level. He/she lets the trainees work independently in groups and moderates the results. This method will always be used when trainees conduct a project such as manufacturing an electric cooker with costing and pricing - now able to work on their own thanks to the previous learning processes. While the first two roles are played throughout the entire learning process with different degrees of intensity, the moderator is limited to phases and results.

The teacher's training (by the CWG's business expert or teachers already in the CWG) should not be confined to conveying information; the teacher must be prepared with practical exercises (micro teaching for example).

Didactics

This is about subject matter, the topics. They are largely covered in the training module material. They are geared to business practice and tied to activities not concepts (no 'autumn' didactics) and should be used as tools to solve business problems. They should always be linked with the technical training in the project and the local market. The linkup with the technical project calls for cooperation with the technical trainers, but also at subject level, obtaining payroll cards from the motor vehicle workshop to calculate labour costs for a repair job, for example. There are also broader issues of cooperation to settle with the industrial-technical project: we need to match up the practical and theoretical industrial-technical training to draw the link to (theoretical) business teaching, the practical business training phases (e.g. market surveys) and combine technical and business training in a joint project (manufacturing a product/providing a technical service and marketing these).

Method

Alongside imparting knowledge, the training methods should aim at conveying the importance of business work and fostering self-reliance in the trainees. For this reason the lecture and teacher-centred teaching should be supplemented as much as possible by guided research tasks on own workshops or the local market situation. In our own training course it is a help when the trainers from the technical side can be involved in the business training programme. We can also set small group tasks to apply and consolidate the knowledge acquired. It is also very useful to invite practicians to take part in the business teaching. They can help provide a motivating lead-in to the training module, provide examples and link up with applied practice. In any case: the basic method is to advance from guided to autonomous learning.

Of great importance in method is defining activity goals to access the training modules. When at the beginning we define an activity goal ('I have to make an electric cooker, so I need a hot plate, electrical components') we bring in topics such as procurement with quantity planning, costing, supply sources), which have considerable implications for teaching method. A basic operation is thus extended to a systematic activity in major business sub-areas. This gives basic shape to teaching method, which proceeds from the activity to the product and from practice to theory.

Of equal importance for method is that the teaching and course culminate in an activity outcome that lends coherence to the whole. For this we need a task that spans individual training modules. For example, the individual training modules can be seen as contributions to setting up a micro enterprise (feasibility study). This would mean enlarging the activity goal such as producing an electric cooker with the necessary purpose-tied activities to encompass a (realistic) directive dimension. So the teaching is not just concerned with the successful activity (cooker is being and has been produced); but also with discussing activity options (price alternatives, production options, cost cutting, reorganization of work...).

Media

The media used in teaching are not just there to illustrate. They are not just there to help the teacher. Rather, the worksheets/forms should be designed for later use in subsequent everyday work. Their practice-centred design should be a structural teaching element. They should be explained or developed further in discussions with the teacher and filed along with commentaries/notes in a work folder. This work folder should be used like a toolbox.

Recap

The CWG must place stress on teacher/trainer preparation. Curriculum information is essential here. It is also important to know the goals, topics and teaching methods and media. All this together can be combined in exercises. We can either conduct and discuss trial lessons or train behaviour under the simplified conditions of micro teaching. Also key is the link to the technical projects and the interface openings. Unlike a pure business project, we need to organize an intensive phase of establishing contact with the technical side and sounding out possibilities. This is the only way to ensure a sound basic structure for the supplementary curriculum.

9th planning step: Curriculum evaluation

After getting through eight out of nine planning steps, the CWG is usually exhausted and often neglects the last planning step -evaluating and revising the curriculum. In fact, though, the most interesting question is the impact of the curricular work on training practice, the trainers and trainees. We need to adopt a candid, curious attitude and not simply dismiss criticism. This is where we find out whether the lengthy preparations in the 'CWG laboratory' have aroused learner interest and induced the trainers to make their teaching more interesting. However, the CWG must make a realistic assessment of their capabilities for reviewing the curriculum and the resultant business training practice. It is a matter of time, money and staff, but evaluating the curriculum is vital for curriculum development and revision and must be accorded due importance.

Considering the conditions for a comparatively small and short supplementary project such as business training for technicians and craftsmen the best way to evaluate it is with a kind of activity research approach. This is a special form of evaluation: the findings should be promptly rechannelled into ongoing curriculum development and further development. This is a suitable approach for the supplementary business curriculum. It also ensures that the curriculum evaluation feeds back into curriculum development: it is essential to start teaching and evaluating after the first training modules.

We recommend a preliminary evaluation. To gain an initial picture, the first training module should undergo a phased test in teaching with two groups. The first test group should be technical experts not directly connected with developing the business training module. The second test group are the local technical trainers with company experience. The third test group is then the actual target group of the training, the industrial-technical trainees. With the findings from these tests we can make our first revisions while still developing the training modules before actually beginning with the supplementary training.

The questions we pose in curriculum evaluation are of vital interest. They are not confined to the examination of the learners; they also have to do with possible faults in curriculum planning and development. In the long run the occupational experience of the qualified trainees needs to be included in the curriculum evaluation: this is the ultimate yardstick for the success or failure of the supplementary business curriculum.

The fundamental key questions to evaluate the curriculum are as follows:

1. What are the learning achievements at the end of the supplementary training?

2. What are the reasons for the shortcomings in the supplementary business training?

These general questions must be supplemented by the following special questions which derive from the nature of the supplementary business curriculum. They pertain to the core of the curriculum and should be accorded priority in evaluation (they are largely the result of planning steps 2-8):

1. Was the basic curricular decision to link training goals and topics with business routines and ongoing business decision-making right?

2. How effective was the desired close link between industrial-technical and business topics?

3. What is the best way to match up the technical and business training courses?

4. Have technical and business trainers cooperated and if so, how would you assess this cooperation?

5. Do the developed training modules of the framework curriculum cover the range of necessary business knowledge for your own business course?

6. How would you assess the structure of the modules? Are they close enough to practice and is the level appropriate?

7. Do the trainers keep close to industrial-technical practice and train for practice or do they cling to abstract theory?

8. How do the trainers deal with suggestions on method (mobilize trainees, run projects)? Are they adopting a new teaching style?

9. How do the trainers respond to the notion of the business toolbox and do they view this as a major training goal?

10. How do trainees respond to pro-active, practical, activity-centred training and teaching forms? Do they draw connections with industrial-technical work operations and does that make sense to them?

The curriculum evaluation can result in far-reaching changes to the curriculum project. It may not, however, call into question the basic approach: its concern is to get the best out of that approach. When the CWG (above all the business expert assigned to the technical project) evaluates the curriculum, it can only monitor lessons to a limited degree. These observations must be supplemented by evaluation discussions with the trainers involved (technical, business) and the trainees. Both procedures - monitoring teachers/trainers and evaluation discussions - must be recorded and these notes used as a basis for discussion in the CWG (to ensure purposeful discussion).

Above all we cannot do without the evaluation of the training by the teachers and trainers themselves. Without their self assessment of what they experience and how they behave in teaching and training, the basis for the evaluation will be too narrow, despite the subjective teacher bias (although outside observers also have 'their' point of view). The CWG must draft a straightforward self-evaluation questionnaire which allows for brief answers (the questions should be geared to the above question list). Responsibility for the long-term effectiveness of the supplementary business training (how does the supplementary business training help trainees in occupational practice) must be borne by the industrial-technical project leader. He/she is usually the only person involved for long enough in the industrial-technical project to do this job and convey the findings to the GTZ and the authors of this guide.

Part IV: Closing remark

We hope you have found our guide interesting enough to read and work through. We look forward to suggestions for improvements and especially the findings from the integrated projects to be able to make substantive changes (e.g. including new modules, supplementing the basic approach) and above all to cater better for the specific interests of the industrial-technical training project in supplementary business training. (Addresses: R. Dröge, G. Neumann, Universität Kassel, Institut für Berufsbildung, Heinrich-Plett-Str. 40, D 34109 Kassel, Tel: 0561/8044549, Sekr. 8044548, Fax: 0561/8044007, E-Mail: heller@hrz.uni-kassel.de and C. Przyklenk, E. Bähr, A. Becker, GTZ, Postfach 5180, D 65726 Eschborn, Tel. 06196/791463, Fax: 06196/797181, Claus. Przyklenk@gtz.de)

DSE

Training Discussion Paper

FINANCING VOCATIONAL EDUCATION AND TRAINING IN DEVELOPING COUNTRIES

Deutsche Stiftung für internationale Entwicklung

Geman Foundation for International Development

Fondation Allemande pour le Développement International

Fundación Alemana para el Desarrollo Internacional

Die Deutsche Stiftung für internationale Entwicklung (DSE) wurde 1959 auf Initiative der politischen Parteien des Deutschen Bundestages von Bund und Ländern mit dem Ziel gegründet, die Beziehungen der Bundesrepublik Deutschland zu den Entwicklungsländern auf der Grundlage des gegenseitigen Erfahrungsaustausches zu pflegen. Diesem Auftrag kommt die DSE nach, indem sie durch Dialog- und Fortbildungsmaßnahmen Vorhaben der Länder Afrikas, Asiens und Lateinamerikas unterstützt, die der wirtschaftlichen und sozialen Entwicklung dienen.

Fortbildung von Fach- und Führungskräften der Entwicklungsländer

In Zusammenarbeit mit nationalen und internationalen Partnerorganisationen hat die DSE in den 28 Jahren ihres Bestehens über 70.000 Fach- und Führungskräften aus mehr als 100 Ländern Gelegenheit zum Erfahrungsaustausch über Fragen der internationalen Entwicklung und zur berufsspezifischen Fortbildung gegeben. Schwerpunkte sind dabei die ländliche Entwicklung und Ernährungssicherung sowie die Förderung gewerblicher Bildungseinrichtungen. Ferner unterstützt die Stiftung Maßnahmen zur Stärkung der Planungsund Organisationsfähigkeit der Entwicklungsländer in der Verwaltung so- wie im Gesundheits- und Bildungswesen, letzteres besonders durch die Förderung der Primarerziehung in Afrika. Ein besonderer Schwerpunkt sind Programme zur Armutsbekämpfung durch Selbsthilfe.

Etwa 55 Prozent des Programmvolumens werden im Inland abgewickelt, der Rest in Entwicklungsländern.

Fachübergreifender Dialog

Mit dem Entwicklungspolitischen Forum steht der DSE und ihrer Schwesterorganisation, der Carl Duisberg Gesellschaft, darüber hinaus eine Einrichtung zur Verfügung, welche die fachübergreifende Diskussion aktueller Fragen der internationalen Entwicklung auf hoher politischer Ebene zum Ziel hat.

Vorbereitung auf Auslandseinsätze

In der Zentralstelle für Auslandskunde der DSE in Bad Honnef werden deutsche Fachkräfte und ihre (Ehe-)Partner sowie deren Kinder auf die Tätigkeit in einem Entwicklungsland vorbereitet. Die Vorbereitung zielt darauf ab, die künftigen Auslandsmitarbeiter und -mitarbeiterinnen zu befähigen, im Gastland aufgabengerecht zu arbeiten. Zur Vorbereitung gehören insbesondere die Vermittlung von Kenntnissen über Ziele und Verfahren der deutschen Entwicklungszusammenarbeit sowie das Bemühen, Verständnis für das Gastland und die Probleme der Zusammenarbeit mit Angehörigen einer anderen Kultur zu schaffen.

Dokumentation und Information

Schließlich unterhält die DSE die größte Dokumentations- und Informationsstelle in der Bundesrepublik Deutschland zu Fragen der Entwicklungspolitik.

Der Information der interessierten Öffentlichkeit über aktuelle entwicklungspolitische Probleme sowie der Aufrechterhaltung des Kontakts zu ehemaligen Programmteilnehmern dienen die viersprachig erscheinde Zeitschrift "Entwicklung und Zusammenarbeit" und die Zeitschrift "Echo aus Deutschland", die gemeinsam mit der Carl Duisberg Gesellschaft herausgegeben werden. Zusammen mit der Deutschen Gesellschaft für Technische Zusammenarbeit (GTZ) und der Deutschen Landwirtschaftsgesellschaft (DLG) gibt die DSE die Zweimonatsschrift "entwicklung + ländlicher raum" heraus. Darüber hinaus informiert das Entwicklungspolitische Informationszentrum (EPIZ) der DSE in Berlin Besuchergruppen über die verschiedenen Aufgabenfelder der internationalen Entwicklungszusammenarbeit.

PREFACE

This paper has been developed for the use of the participants of vocational training courses conducted by the Industrial Occupations Promotion Centre of the German Foundation for International Development in Mannheim. The participants, mainly in-service personnel, come from selected developing countries representing vocational training centres, Ministries of Education and Labour and Non-Government Organisations. As the participants are involved at different levels in the planning and implementation of vocational education and training in their respective countries, the main aim of this paper is to create in them adequate awareness of how vocational education and training systems are financed. The manual is a simple readable document which could be of use to participants with varying levels of education.

In its preparation the paper draws upon the ideas and country experiences contained in books and articles on the subject written by eminent educators and trainers.

The paper has been prepared by Ms P. Bolina, Deputy Educational Adviser, Ministry of Human Resource Development, Government of India, under the general guidance of Mr. H. Burk, Director of the Industrial Occupations Promotion Centre, and Dr. M. Wallenborn, Head of the Dept. of Vocational Training in the Industrial Sector, Industrial Occupations Promotion Centre. Valuable guidance was also provided by Prof. D. Timmermann, University of Bielefeld.

CONTENTS

I. INTRODUCTION

In almost all the countries in the world education is provided in both the public and the private sectors. A certain minimum level of education is necessary for a country to achieve economic growth. The allocation of resources to education varies in each country in accordance with its priorities but generally ranges from 3 to 8 % of the gross national product (GNP) (UNESCO.. 1993).

The overall costs on education are on the increase. Developing countries are particularly hard hit due to the economic crisis. They need to improve productivity to enable them to compete in an era of rapid economic and technological change. This requires both capital investment and a workforce with the flexibility for aquiring new skills for new jobs. They are also faced with the challenge of meeting the requirements of the education sector, to fulfil the overall responsibility vested in the state for development of human resources. Governments cannot shift this responsibility as education confers benefits to the society at large. It can at best harness the support of the private sector, the community and individuals in its endeavour to reach its goals towards social and economic development of the country. While budgetary constraints are prevailing everywhere it is more severe in countries which have completely public financed education systems. Some of the reasons for the crisis in financing education are increase in demand for access to education, increase in teachers' salaries, inefficiency in the use of available resources, demographic growth unemployment of graduates, increase in the costs of land and buildings etc.. Reform in financing has to come about by modifying financing modes. Some ways could be, that users should bear some part of the costs as entire public funding cannot be justified; more efficient management of funds, search for private financing, community and enterprise involvement, foreign aid.

As budget allocations from government sources for education get tighter, the squeeze on availability of funds for Vocational Education and Training (VET) is apparent in so far as VET is dependent on public funds. Costs on VET as compared with general education are also 2 to 3 times higher as classes are small with instructor trainee ratios of 1:7 sometimes. This increases the unit teaching costs. Expenditure on equipment, infrastructure, consumables e.g. raw materials and spare parts is also much higher. It is then imperative to search for alternative means of financing. The challenge before policy makers is to introduce new and different ways of financing as well as to ensure that the resources which are available for VET are used more effectively.

Traditionally VET was provided by employers who paid lower wages and sometimes apprentices had to pay the employer. This was prevalent in many different countries. In Germany, approximately since the 12th century, a person was allowed to pursue a trade independently if he had finished the apprenticeship in a craft with a master. After apprenticeship he had to obtain professional experience as a journeyman. The master taught his apprentice and journeyman the knowledge of his trade. The craftsmen got united and formed guilds (craftsmen's organizations) and evolved a proper training system. The main responsibility for vocational training lay with the craftsmen's organizations and all conditions were regulated by the guild.

Traditional apprenticeship also existed in India for centuries. Even today in towns and villages it is a very common sight to observe an apprentice working with the master, learning by working on the job, all at a very early age. In the former times in India apprentices often lived with the master and there was a certain unity in living, learning and working. In the small by lanes of towns and cities in countries like Indonesia, Nepal, Bangladesh and India it is very common to see young apprentices in the age group of 10-20 years being trained by their employers e.g. the bicycle repair, the auto mechanics workshop. They go straight 'on the job'. Sometimes in the initial stages there is no payment. As they learn the work they begin to get a small wage. The costs are shared by the employer who provides the training and the worker who accepts low wages.

In the modern times the scenario has somewhat changed. Gradually governments have become more involved in VET especially in the last two decades. This is mainly to link vocational education and training with the social, economic and employment policies of the country. Public revenue for VET has assumed more importance. But owing to the economic crisis governments had to reduce the public budgets for education and this has a direct bearing on all sectors of education including VET. Serious attempts have to be made to find resources to supplement available funds. Every country has to assess its training needs and requirements in accordance with its goals and priorities and the prevailing socio-economic conditions. Thereafter strategies for financing VET have to be worked out and additional resources generated.

While governments are searching for new and alternative mechanisms, the private sector is being drawn in justifiably, for those who benefit must pay for it. The relevance of vocational education to the labour market requirements is crucial. As the employers become more involved in the actual provision of vocational education and training it will come closer to labour market needs influenced particularly by the rapid technological change.

Skill requirements have also become more complex. Vocational Training Institutes are set up with new and modern training methods being offered. This has naturally led to questions being raised about the costs of training and the mechanisms of financing it. It is difficult to estimate the exact costs on VET due to the complexities involved in the training systems, the absence of accurate accounts by employers and the productive work of the apprentices/trainees who accept lower wages and thereby offset part of the costs incurred. Nevertheless studies have concentrated on the total amount of funds allocated for VET and its adequacy. Mincer conducted a study as early as in 1958 on the costs of industrial training in USA. He estimated that the total opportunitiy cost of formal and informal vocational training was over US$ 16 Billion in 1958 of which US$ 10 Billion was the cost of training in private firms or corporate enterprises. 70% of this was spent on informal 'on the job' training and 30% on formal training (Mincer 1962). The costs on VET in the UK were also estimated, which put the total costs of education at £ 9,000 million per annum in Great Britain. Roughly the estimates out of this on VET would account for £ 3,000 million a year (Johnson 1979).

Even though the studies mentioned above show that a large volume of resources was used for VET in these countries, in many countries it is being consistently felt that not enough resources are provided for VET. This is particularly the case in developing countries which are experiencing a shortage of skilled manpower. Governments are therefore getting more concerned about financing of vocational training to meet the new and emerging labour market requirements.

Various financing strategies are practiced in different parts of the world. Some of the more well known mechanisms for financing VET have been categorized in the following four types:

(1) Public Financing
(2) Enterprise Financing
(3) Private and Public Sponsored Financing
(4) International Donor Assistance.

In the following pages the four types of financing mechanisms have been described briefly with some country examples. The advantages and disadvantages of each type have also been identified and policy implications indicated.

II. PUBLIC FINANCING

-- Traditionally vocational training was provided by employers who paid lower wages or no wages at all to the trainees. Employers did this if it increased productivity of workers. In many cases, government was only involved with standards of training.

-- Involvement of governments increased mainly to link vocational education and training more closely with social, economic and employment policies of the country. There was also a growing concern about distribution of training opportunities for the poorer and disadvantaged sections of the society.

-- Public Financing is provided through public revenue (government funds). When the State finances vocational training through public funds it is on the assumption that the ultimate responsibility for development of human resources for national development lies with the State.

-- Governments also intervene in the provision of vocational training to ensure social equity for the poor in the rural and urban informal sector. Public financed VET provides opportunities to persons who may otherwise have limited chances e.g. those from the deprived sections of the society.

-- In most countries the budget for VET from public sources is relatively small, ranging from 1 to 12 % of the current expenditure on education (UNESCO, 1993). A table indicating the total educational expenditure as percentage of GNP and the vocational expenditure as percentage of public current expenditure on education for some countries in each continent may be seen at Annexure. The table shows the priority of governments to vocational education in budget allocations from public expenditure. A comparison can also be made of the provisions for education and particularly for vocational education in the developed countries vis a vis the developing countries.

-- Mostly public financed vocational training programmes are implemented in schools before employment is taken up. Non-formal training centres, pre-service and in-service training for Ministries also receive public funding.

-- Specialized vocational training institutions receive public funds mainly through subsidies, budget appropriations, tax incentives, financing of special programmes with special grants, financing of development projects, financing of supervisory bodies, fellowships for VET. In developing countries e.g. Pakistan, India and Thailand the main financial contribution for VET comes from public funds (government). Industry takes little part in contributing to vocational training institutes.

-- In cases of mixed funding, generally capital expenditure is provided by the governments and recurring expenditure is shared through other sources.

-- Public vocational training institutions generally offer courses which provide basic skills necessary in pre-service training. In Canada, manpower training programmes are offered in public institutions e.g. in colleges and vocational training centers.

1. Tax Revenue

-- The major source of public funds is through tax revenue. Sometimes governments give grants to vocational training institutions which can raise some resources on its own. Such a grant is called matching grant as it makes it obligatory for the potential recipient to first raise some finances on its own. In USA, the Federal Government makes use of financing through matching grants and categorical aid. It gives about 6-8 % of the State and local contributions for public supported VET (Herschbach, 1993).

-- Categorical aid is given for a specific purpose to meet the special needs of certain target groups. It supplements funds which are provided for general purpose VET.

-- In many countries owing to a shortage of skilled manpower governments had to create proper vocational training systems for long term social returns of training, need for equal opportunities of training for those who are unable to pay costs of their training, and to promote national VET policies. Training institutions thus created were mainly financed by a general tax through compulsory contributions made by firms and enterprises, contributions from national treasury, co-financing agreements and sale of training services (Ducci, 1991).

-- When governments finance vocational training institutions they control the volume of resources allocated to VET in accordance with the priorities of the social and economic sectors (Ducci, 1991). They are also able to exercise control on the quality of the programmes.

-- The cost effectiveness of vocational training through public financing is said to be low as public training institutions are not very keen to evaluate the qualitative and quantitative training needs. In Argentina, CONET receives funding from the Ministry which has been declining over the years due to a reduction in the overall budget of the ministry. There are restrictions on CONET securing funds from other sources e.g. sale of services, international sources and this has led to a serious shortage of resources affecting the efficiency of the institution in maintenance of infrastructure and equipment and reduction in staff salaries (Ducci, 1991).

-- When public training institutions are expanded and do not get adequate finances correspondingly the quality of training may become poor. In Egypt government enrols more than half of upper secondary students in vocational schools to divert them from higher education. Open unemployment among graduates exceeds 35 %. In Bangladesh, Cameroon less than half of public trainees find wage employment in their trade. Public training has to respond to the demand in the labour market, only then can it become cost effective with good quality training leading to high placement rates (World Bank, 1991).

-- Public contributions are controlled by restrictive policies. Vocational training institutions which are dependent solely on public funds have the chance of becoming stagnant with a deterioration in their planning and efficiency. Sometimes subsidies to vocational training institutions are dependent on the good will of the government.

-- Many developing countries have highly centralized systems and major control is with the central government. When VET is financed through the State it controls the curriculum, certification, qualification of teachers (World Bank, 1988). In decentralized systems there is a sharing of power. A healthy policy is to allow communities and lower levels of government to have greater autonomy.

-- There should also be a balance between the resources controlled by the central government and those available to the lower levels of government.

2. Advantages and Disadvantages

<u>Advantages</u>

- When government finances vocational training through public revenue it can coordinate the requirements in accordance with the demand projected in the economic and employment policies.

- Matching grants encourage local initiative as institutions wishing to receive grants from the government try to raise resources on their own.

- Categorial aid usually helps to implement change as it is given for a specific purpose or to meet the needs of specific target groups in the population.

- Through both these methods of financing, governments can share control and at the same time have part of the financial burden shared by others.

- In the initial stages, national training centres are said to develop better in centralized systems as the institutional capacities are not strong. But centralization is not desirable when institutions become well developed. At that stage more autonomy is required.

- In public distribution systems there is more equity. Publicly financed vocational training systems offer opportunities to the poorer sections of the society. For them it may be the only opportunity to become trained.

<u>Disadvantages</u>

- Underfinancing. Shortage of resources for VET from public educational funds.

- Sometimes governments are under pressure to open more VET institutions even when resources are inadequate. This leads to implementation of programmes which are underfinanced and the quality of training may decline.

- Unreliable support. There are variations in the allocation of educational budgets. Funding fluctuates and VET programmes get affected.

- Sometimes new programmes receive substantial support. But priorities may change on account of political considerations.

- Unbalanced allocation of resources. Sometimes there is a larger investment in capital costs and not enough provision for recurrent expenses. Low salaries of teachers is found to adversely affect the quality of instruction and consequently student achievement may become low.

- In centralized systems there are high administrative costs, lack of flexibility and unresponsiveness to labour force requirements.

- The cost effectiveness of vocational training through public financing is found to be low in many countries as public training institutions are not very keen to evaluate the qualitative and quantitative training needs (Ducci, 1991). Rigidly prepared curricula in public institutions prevents them from responding to locally identified training needs.

- Public institutions are less able than private institutions to adjust training for the labour market in accordance with the rapidly changing technology.

3. Policy Implications

-- To be successful public training should concentrate on choosing appropriate objectives, improving market orientation and matching policies in accordance with labour market needs, using resources efficiently and diversifying sources of finance.

-- Public supported vocational training systems should be able to receive funding from local taxes, user fees and collaborative arrangements.

-- When Public Financing is the sole source of support to VET, institutions may face fluctuations in budget allocations. This can cause shortage of resources which may lead to low quality programmes with limited returns on investment.

-- In countries where the quality of vocational programmes is poor in public funded institutions, these programmes should be removed and available resources reallocated (Herschbach, 1993).

-- VET systems can be strengthened with complementary public funds from other sources and this can be done through programme reduction and resource reallocation.

-- Stability in provision of training facilities can come from long term financial support. Governments should adopt consistent policies required for removing inefficiencies.

-- Decentralization helps through delegation of authority to lower levels. Training institutions with a board of representatives of employers, workers organizations and the government have better chances to discuss and adopt relevant and cost effective strategies for training.

III. ENTERPRISE FINANCING

-- The enterprise/company conducts the vocational training of its labour force directly and bears the entire costs of training.

-- Often enterprises finance a major part of the training but actual training occurs in specialized vocational training institutions.

-- Sometimes enterprises contribute a small amount of money to a central vocational training fund as taxes and these recources are used in different ways to finance training.

1. Single Employer Financing

1.1. Japan

-- Japan is well known for its vocational training organized within large private companies. Employers prefer to recruit fresh school leavers with general education and then provide them with continuous training within the enterprise.

-- The public sector is generally small. In 1980's it employed 3.6 % of the labour force (Inoue, 1985). Private industry employs 85 % of the labour force and is dominated mainly by large industrial companies.

-- Japanese people have a strong influence of culture derived from Buddhism, Confucianism and Shintoism which teaches them to achieve high standards through hard work and have lasting obligations to the school group, the family and the company (Lauglo, 1993).

-- Generally a person devotes his whole life to working in the same company- Most Japanese companies also recruit a workforce for life. Training is given on the assumption that employees will continue to work for the same company. In large companies which employ 30 % of the labour force employment for life is an important norm (Mc Cormick, 1989).

-- Most large companies organize their own vocational training and the outlays for in-house vocational training are considered a part of the labour costs. Smaller companies with less resources rely on training facilities outside the company and are supported financially from proceeds of the unemployment insurance funds to which the government and employers contribute half and half. Enterprises can also pay to get membership of outside training organizations and can thus use their facilities for training of trainers.

-- Vocational training is also organized outside the companies in special vocational schools run by various Ministries. Private vocational schools offer courses of varying duration including day and evening courses. These schools get grants from the government if they are not run for profit.

-- Most technical training in companies takes place in close connection with production. Production engineers train a small group of workers who will use the latest technology and in turn these workers will further teach others in their work groups which are established for production purposes. As such the extra resources provided for training are sometimes much less than the training that actually takes place (Mc Cormick, 1989).

-- Technical training also takes place through self study of manuals or through correspondence courses. These costs also do not fall on the employers. According to Dore and Sako (1987) if hourly wages were to be calculated for this contribution the total may exceed the training costs incurred by the industry. Sometimes companies also provide finances for self development of workers. Employees are highly motivated to upgrade their skills.

-- The government helps to finance and guide vocational training among small firms. But major companies do not rely on training done in government institutions. They also believe that employee training should be tailored to the requirements and conditions of each company (Pedder, 1989).

-- The Japan Industrial and Vocational Training Association (JIVTA) is the main organization in Japan concerned with training within industry. It is a private association of employers and has a constitution and a budget supervised by the Ministry of International Trade and Industry. JIVTA policy is developed by 1,000 company representatives of which 60 % are from large companies and 40 % from small companies. The government does not provide funding to JIVTA. 25 % of its budget is collected from membership fees and 75 % is generated from course fees. In the last 30 years JIVTA trained 30,000 persons as training leaders who in turn trained more than 1,000,000 trainees in their own industries. JIVTA has given a unique direction to the employers about an independent approach in vocational training (Pedder, 1989).

-- Employers consider training as an investment. They provide training in accordance with their own needs and this has resulted in developing effective policies.

1.2. Korea

-- In Korea the Basic Law for Vocational Training enforced in 1976 makes it mandatory for enterprises with over 300 employees to conduct in plant training. If they do not do so they pay a training levy based on a certain percentage of payroll costs ranging from 1 % to 3.9 %. Large companies have training budgets and consider training as an important investment. Apart from Japan, Korea is an important example of a country in the Asian region which is relying heavily on skills training in the enterprise. But small companies still rely on the public training system (Pedder, 1989).

2. Payroll Tax

-- In Latin America payroll tax was generally used to support vocational training. In 1942, the Brazilian government levied a special tax on enterprises for offering compulsory technical training to apprentices and SENAI - the National Industrial Training Service - was founded. Colombia established SENA in 1957, Venezuela the INCE in 1959 and Peru set up SENATI in 1961. There was a close collaboration between the government, the employers and worker groups (Ducci, 1983).

-- In 1987, Vocational Training Institutes (VTI) in 12 Latin American countries enrolled more than 3 million persons equivalent to 37 % of total secondary school enrolments in the same countries (Cinterfor/ILO, 1991).

-- Government usually assesses an annual levy of 1 to 2 % of the wage bill paid by the employers and sometimes even 3 %. In every country there are variations. Sometimes state enterprises and government bodies do not contribute. Sometimes smaller firms are exempt and larger firms pay more. Sometimes workers also pay, but most of the funds come from enterprises.

-- The range of training services include formal apprenticeships with classroom instruction, sandwich courses and training of instructors offered for technicians, supervisors and middle managers.

-- In UK the Industrial Training Act of 1964 aimed at increasing the amount of training in industry, improving its quality and redistributing costs more fairly. Through the levy grant all firms contributed towards costs of training which ranged from 1 % to over 3 % of the total wages and salaries. The system increased the quantity of training but the Industrial Training Boards and the Industrial Training Act came under criticism. The Training Act was replaced in 1974 by a selective levy grant system involving exemptions to small firms or those which provide enough training for their own labour needs. Levies were not compulsory but imposed on firms which provided no training or limited training (Woodhall, 1987).

-- In France there is a compulsory tax system of training funds and an apprenticeship tax so that all firms must pay a certain proportion of their total wages and salaries as a payroll tax, and these funds are used for financing vocational education.

-- In some countries governments provide subsidies to encourage training and the costs are met from general taxation. In Australia the Commonwealth Rebate for Apprenticeship Full Time Training (CRAFT) is a subsidy used for reimbursing employers for part of the costs of apprenticeship training (Woodhall, 1987).

-- In some of the Latin American countries the payroll taxes have been criticised. In Argentina the payroll tax was removed in 1981 as attempts were made to restructure public expenditures to cope with the economic crisis. In Brazil, the payroll tax has grown. But co-financing between the enterprises and VTIs is gaining more importance. In Colombia, on one side the payroll taxes have been questioned and on the other its application has been diversified (Ducci, 1991).

-- In Costa Rica although the payroll contribution increased from 1 % to 2 % in 1983, the surplus money was transfered to another fund and used for purposes other than vocational training. In Peru, SENATI has lowered payroll taxes and is trying to find funding from other sources (Ducci, 1991).

3. Tax Rebates and Credit Schemes

-- In most regions other than Latin America, Tax Rebates or Tax Credit system is more frequently used. The principle is the same as Payroll Levies - those who benefit, pay the costs of training.

-- In Tax Rebates, a portion of the tax is returned to the firm as subsidy for training. In Singapore and Tunisia, the rebate is on the basis of costs incurred. In Nigeria and Zimbabwe it is in the form of grants to set up training systems.

-- In tax credit the firm reduces its tax bill by the value of training.

4. Ways in which Tax is Used

-- In Ivory Coast modern sector enterprises have to pay 1.2 % for continuing vocational training and 0.4 % for apprenticeship and initial training. Funds are managed by the Fund for Development of Vocational Training (FDFP) (Herschbach, 1993).

-- In Taiwan the small and medium sized firms took a keen interest for training in the enterprise. Firms get upto 80% of training costs reimbursed (Herschbach, 1993).

-- Tax rebates for financing vocational training were prevalent in Argentina since 1981 and in Brazil and Chile since 1976. In 1975 the Brazilian Government passed a law for deduction in the form of income tax of juridical persons equal to twice the expenditure invested in vocational training and upto a ceiling of 10 % of taxable earnings. But after 10 years a review showed discouraging results. The impact was small. There was evidence that tax rebates were mainly being used by those enterprises which already had ambitious training programmes (Ducci, 1991).

-- In Argentina tax credit system was introduced by law in 1980. Enterprises were authorized to deduct from their taxes upto 8 per thousand of overall wages and salaries as expenditure on technical education and training of workers. CONET is in charge of the spending and issuing of certificates when enterprises pay their dues to the general tax department. The Argentine Construction Chamber set up a Vocational Training Centre and a support body called Caesar M. Toledo Training Centre Association. Firms which belong to the Chamber give their share of contributions to this Association which uses the funds for training (Ducci, 1991).

-- In Chile the National Training and Employment Service (SENCE) created in 1976 is mainly responsible for Vocational Training. Tax incentives to enterprises are the main source of financing. Implementing agencies conduct training which is supervised by SENCE (Ducci, 1991).

-- France has a very comprehensive system of financing vocational training (Herschbach, 1993). There is a combination of public supported pre-service training, enterprise supported in-service training and funds from the state, regional and local levels account for approximately 40 % of the total annual budget for all types of VET. The rest is financed by private enterprises.

There are 3 ways of financing in France:

a) General tax revenues used for supporting public and private secondary level pre-employment vocational education. Outlay for VET is about 1.5 % of the Gross Domestic Product (GDP).

b) Compulsory Apprenticeship Tax of about 0.6 % of a company's wage bill is used for initial training. Of this 0.1 % is kept by the government for training of youth between 16 - 25 years of age and 0.5 % is collected and administered by regional councils. If employers accept apprentices they do not pay tax. They can also pay fees to the institutions that organize courses or they can pay taxes directly to the government. In this way employers fulfil their obligations.

c) Compulsory in-service tax is applicable to all enterprises which have more than 9 employees. It is 1.2 % of each company's total wage bill. Employers can use 0.8 % of this for their own in-house training. From the remaining amount 0.3 % is used for youth training and 0.1 % for training employees during paid training leave.

The French Training System has a large training industry and offers a variety of VET programmes. Government takes an active interest. It formulates policy, legal framework and monitors quality of training.

4.1. Vocational Training Funds

-- In many countries where employers are active participants in VET a Training Fund for financing vocational training has been set up. Tax contributions from the employers collected through payroll levies or subsidies from the government are transfered to the Training Fund.

-- In Zimbabwe companies by an Act of Law have to contribute 1% of their wage bill to a central fund managed by the Ministry of Education and called Zimbabwe Manpower Development Fund (ZIMDEF). The fund is used for financing vocational training activities e.g. apprenticeship training for various categories of trainees, upgrading training of skilled workers. Also companies that provide 'on the job' training to apprentices can claim rebates from this fund at a prescribed rate.

-- Management of funds can be handled by the concerned Ministry, the employers association and the workers' unions. This is a useful way as such cooperation facilitates formulation of appropriate training policy.

-- Funds can be managed in the following ways (Atchoarena, 1993):

(1) The "Fair Return" system of management.

Every firm contributes to the Fund in accordance with legal provisions. After contributing, the firm has a right for a certain period of time, to refund an amount equivalent to its contribution and use it for training.

(2) Mutualization.

According to Atchoarena mutualization is a term used as the financial expression of the principal of solidarity. Under this system, the contributions from the companies are managed entirely by the Fund. The management of the Fund decides how much training is required from each firm. The firms do not have special claims. Some of the small firms may get more funds than their contributions and others may get less. Training activities are organised according to the target group and demand for training.

(3) Drawing Rights.

Every firm gets a drawing right which is a fraction of its contribution. The remaining amount is mutualized. Every firm retains a certain degree of autonomy and the Fund also has some reserves.

5. Advantages and Disadvantages

Advantages

- When individual companies train their own work force such as in Japan they can tailor their requirements in accordance with the actual needs. This leads to effective management policies and avoids wastage of trained manpower.

- When training occurs alongside production it reduces the overall costs on training.

- Training and employment in one company/enterprise gives stability to the individual and to the company.

- A study of financing of vocational training in Latin America (Kingler & Reyes, 1978) indicated that payroll taxes proved to be an effective financing mechanism as it helped to create training institutions that are workable and good alternatives to traditional training systems.
- Payroll levies are found to be more successful in middle income countries. They are effective in addressing the training needs of large formal sector enterprises. Also effective in strengthening government, employers and labour cooperation (Inter-American Centre for Research and Documentation for Voc. Training, 1991).

Disadvantages

- Government officials try to regulate the independence of individual companies and this may create some policy problems.

- Companies try to recruit only the best students as trainees. This may cause social inequity.

- When training takes place only in one company there is absence of general certification. This affects labour mobilisation from one company to another.

- Companies may reduce training places to avoid costs if they do not make adequate profit.

- Payroll levies are found to be less effective in addressing the training requirement of small and medium sized employers, women, the workers and unemployed (Ducci, 1991). In small countries private sector is small, governments have less capacity to generate income, less administrative capability to collect payroll taxes and so they have not been successful.
- Payroll levies lead to firms reducing their self financed training activities. Taxes, in a sense crush the individual initiative and firms only train to fulfill the legal requirements (Bas and Castro, 1989).

Advantages	Disadvantages
- Payroll levies are shouldered by enterprises but part of the costs fall on workers in the form of lower wages. This leads to sharing of costs as workers subsidize their own training.	- Payroll levies are often criticised. Governments divert some of the funds collected through levies to finance other programmes. Sometimes only 15 % is used to finance national training authorities. In Colombia SENA has to give 50% of the revenues generated through payrolls to support formal public school vocational programmes (Cuervo and Van Steenwyk, 1986).
- Although training costs are high for the national training agencies but quality of training programmes is better and linked to employers needs.	
- Larger enterprises benefit more through tax rebates and credits. In 1985, in Singapore all the firms with 200 or more employees applied for training grants in contrast to 25 % of firms with 50 employees or less. Firms which had 10 employees or less only 2.2 % applied for grants (Pang and Salome, 1986).	- In tax rebate and credit schemes high administrative costs are involved. Firms which would normally invest more have a tendency to reduce their effort to the bare minimum required by law. Sometimes reluctant firms organize poor training (Bas and Castro, 1989).
- Tax credits are more effective in matured or maturing economies.	- In Brazil and Chile where some evaluations were made, tax rebates concentrated benefits on large enterprises in the more developed regions. Steps had to be taken to promote small and medium sized firms and associations (Ducci, 1991).
- When seen from a broader perspective VTI's compete with each other to train manpower required by the enterprises. This encourages efficiency within the institutions.	
- As the Vocational Training Fund observes the labour market closely and has regular interaction with business and industrial houses, it can influence the organization of appropriate VET programmes in accordance with labour market demand.	- Tax rebates ultimately imply that financing is by the State but the training imparted is by the enterprises. Although this leads to better coordination of the demand and supply of vocational training, sometimes the demand may not correspond to the real need.
- It can also influence the quality of training.	- Tax credit schemes are less beneficial for low income countries as firms are not able to organize different types of training.
- As it negotiates funding of training with business and industrial houses, to an extent it effectively regulates industrial relations.	
- Through the process of Mutualization the Fund can provide resources for training to small firms and enterprises which may not otherwise have enough access to training. As such it can offer equal training opportunities to firms.	- The System of Mutualization may weaken the mechanism when in a difficult economic situation, many firms request the Fund to provide them resources at the same time (Atchoarena, 1993).
	- Sometimes due to structural adjustment in the economies there is an expansion in the informal sector and a decline in the number of larger firms. This leads to reduction of tax contributions to the Fund and a shortage of available resources for vocational training. The Fund has to then search for alternative financing.
	- It has been observed that sometimes the state makes use of the resources of the Training Fund for other purposes or it does not pay the Tax Revenue to which the Fund is entitled.

Advantages	Disadvantages
	- Sometimes the Fund gets more occupied with banking functions and investing the resources it has collected rather than concentrating on development of training (Atchoarena, 1993). - Experience has shown that with mutualization sometimes there is favouritism towards larger, more privileged firms and towards employees who are already well trained. These beneficiaries are better placed to negotiate their demands and get away with more funds (Atchoarena, 1993).

6. Policy Implications

-- While the single employer financing mechanism has been very successful in Japan there are strong cultural influences which contribute to this success. It is questionable whether in the absence of cultural traditions such as spending a whole lifetime in one company or lasting obligations to the school group, the family and the company, this system of individual company training could be as successful in other parts of the world.

-- In developing countries the responsibility for training cannot be left to the enterprises alone. The government has to organize and finance training alongside to ensure social equity. The deprived and poorer sections of the society need adequate opportunities for training and the enterprises may not necessarily cater to all these groups.

-- Payroll taxes help to develop training institutions in the initial stages when institutions are building their training capacity. But it takes time to create training capacities and this may lead to high costs and sometimes inefficiencies in management.

-- While National Training Agencies have been more successful in larger economies, the same success was not possible in low income countries due to factors such as restricted economies, weak management, less financial resources and high unit costs (Herschbach, 1993).

-- Use of tax rebates and credits creates a dynamic approach to training when enterprises are encouraged to become responsible for training, and is particularly good for retraining and upgrading but less effective for pre-employment training. It is used best with other systems of financing. Tax rebates are particularly advantageous to large employers who have good management systems (Herschbach, 1993).

-- When resources are diversified for creating a Training Fund, efforts should also be made to get additional funding from the state in the form of subsidies.

-- Sometimes Training Centres may be managed directly by the management of the Training Fund. Fees can then be introduced to support financing. Donor agencies and regional authorities can also help in the provision of resources (Atchoarena, 1993).

-- The Training Fund is an important mechanism of financing VET and can diversify its funding, depending on the quality of financial services it offers.

IV. PRIVATE AND PUBLIC SPONSORED FINANCING

Governments faced with a shortage of resources would like individuals, enterprises and non-government organizations (NGO's) to share the financial responsibility for VET.

1. Training Fees

-- In some cases the entire operational costs are borne by the participants through payment of fees.

-- More commonly, employers or trainees bear part of the costs and government finances the remaining. Fees could be paid to the government or the training institution. In the informal sector the apprentices pay their master (Herschbach, 1993).

2. Fellowship, Grants and Loans

-- In most countries of the Latin American region, public financing is through fellowships and grants. The most important system of fellowships and grants is being implemented in Chile. The National Employment Secretariat (SENCE) administers a large system of training fellowships which are designed to offer training opportunities to unemployed young people, the poorer sections, the workers from informal sector and the handicapped. The system is a supplement to tax rebates. The agencies which execute the training programmes are called OTE's and they are supervised by the SENCE. From 1977 to 1987 SENCE provided training to 300,000 persons with fellowships and grants through 19,000 courses organized by different agencies. The courses were mainly short term ranging from 6-12 weeks and covering a wide range of occupations e.g. agriculture and live stock production, forestry, mining and trade. SENAEM has another training programme for training young people in the age group of 18 - 24 who do not have adequate access to programmes offered by enterprises based on their tax rebates (Ducci, 1991).

-- Loans can facilitate training for students coming from poor families if they have to pay for vocational training. But in many developing countries there is no formal system of loans for education (Psacharopoulos and Woodhall, 1985).

3. Sale of Training / Non Training Services

-- Vocational Training Institutes can generate income from the sale of services to public and private enterprises or through individual tuition services.

-- Some VTI's sell complete training packages to enterprises. Some firms may even buy services for setting up training units in their companies. INACAP, SENATI and SENAI in Latin America are well known for this (Ducci, 1991).

-- Some VTI's offer non-training services such as consultancies.

4. Co-Financing Agreements

-- In Argentina co-financing has been arranged with enterprises, communities and vocational schools. In Colombia, Brazil and Peru also co-financing is popular (Ducci, 1991).

-- When there is an agreement between different parties then availability of funds becomes assured and training can be related to the actual demand.

5. The German Dual System

-- In Germany more than two thirds of the 16 - 19 year olds receive training within the dual training system (Greinert, 1992).

-- The system is called dual because there are two places of learning - the vocational schools and the companies. The training is governed by training regulations of the Vocational Training Act, 1969.

-- The system offers a combination of training in vocational schools with learning and practical experience at the worksite. In a week, apprentices spend 1 or 2 days at the public vocational high schools where training in general subjects is offered. The remaining part of the week is spent on the job in the firm/enterprise.

-- Training is usually for 3 and a half years after which individuals get certification and are free to get jobs.

-- The dual system sets high standards of training which leads to high productivity and competitiveness of the labour force. This is why the workers and employees trained in the system are highly appreciated by the German society (Timmermann, 1993).

-- Expenditure on training is met by the state and the enterprise. School costs are provided by the State i.e. the Länder (Federal States) and local authorities from the public budget whereas the participating enterprise bears the cost of practical training or in-plant training. No company is obliged to provide training but it is evident from the number of companies that participate in dual training that they have economic benefit from training their own skilled workers.

-- The Federal Institute of Vocational Training, the institution of governance is totally funded from the federal budget. The chambers and training boards get their finances from levies on all member firms, specific fees from companies who demand services of the chambers and boards e.g. in counselling and examinations, and subsidies from state budgets for special activities. The firms/enterprises finance training from their own resources by overrolling them onto the prices of goods and services sold in the market; shifting part of the costs on the taxpayer; returns from the training through the contribution of the trainees to productive work; sale of training to other firms (Timmermann, 1993).

-- Outlays for Vocational Education and Training were approximately 1.85 % of the GNP in 1992. Contributions by the public and private sector increased from 1980 to 1992, with the expenditure on vocational education and training, rising from DM 15.5 to DM 51.7 Billion (Federal Ministry of Education and Science, 1993/94).

-- In 1985, the annual unit cost to a company was about DM 20,500 for all apprenticeable trades. Companies recovered a fair percentage of this from the work that the apprentice does and contributes to the production. The net cost to the firm was eventually DM 16,000 approximately (Gilardi and Schulz, 1989). The Federal Vocational Training Institute (BIBB) estimated for 1980 that the gross cost to a company was about DM 17,000 and the net cost was about DM 10,000. In 1991, the gross cost to a company rose to DM 29,573 with the net cost at about DM 17,862.

-- The cost surveys are however not completely representative as all training firms do not provide information and surveys in fact cover a small number of training firms. Other limitations are due to the structure of the in-plant training system. The value of the productive work of apprentices during in-plant training can only be estimated but cannot be exactly determined. It is also difficult to account for the actual staff costs of part-time instructors. But surveys do reflect accurately the trends in the levels of vocational training costs (Hegelheimer, 1986).

-- The German Federal Government has continued to make efforts to improve training financed by firms. In 1973 a programm was started to promote inter-firm training workshops aimed at improving training by small and medium firms which were already providing more than half the number of training places. For the first time federal aid was given to the dual system on a significant scale. It was intended to raise the places in inter-firm training workshops from 20,000 to 77,000. It entailed a total expenditure of DM 2.7 Billion of which the federal government paid DM 1.7 Billion, the Länder about DM 0.4 Billion and the firms about DM 0.6 Billion. Firms that benefited were mainly craft firms and some in the industry and agriculture. Federal government also gave funds for vocational schools for special areas. In the late 1970's Länder gave financial aid to provide extra training places in firms to special groups such as girls, foreigners, the handicapped or apprentices from bankrupt firms (Schmidt, 1985).

-- In the dual system the federal government regulates the activities at the workplace through training regulations. Regional governments / the Länder work closely with the implementing agencies. There is need for constructive partnership between both.

-- In Germany, the dual system has proved flexible enough to offer a considerable number of training places even in times of economic difficulty. In large scale industry about 80 % of apprentices are subsequently employed by the company in which they trained (Raggatt, 1988). When large companies invest in the training of their future employees they feel confident that the skilled labour force would be of high quality and in accordance with their requirement.

-- In 1987, the ratio of youth to total unemployment rates in Germany was 1.1, while the average ratio for 14 other OECD countries was 1.9 (OECD, 1991). It would be reasonable to infer that apprenticeship system in Germany is an explanation for this pattern (Lauglo, 1993).

-- Financing by individual firms is a relatively efficient system and it is doubtful if better results could have been achieved in Germany with another financing system (Schmidt, 1985).

-- Among the developing countries, Jordan has successfully adapted the dual training system conducted by the Vocational Training Corporation. In large companies formal instruction as well as practical training is provided on site thereby reducing costs. In smaller firms, apprentices are given formal instruction one day a week at a training centre. Training in Jordan is effective because of cooperation between VTC and employing establishments, coordination of economic and training policy and centralized control. There are some problems too, such as inadequacy of off-site training. More vocational centres were required for theory work, so the costs went up. All students were also not successful in getting jobs as there are imbalances between the demand and supply of skilled manpower (Herschbach, 1993).

6. Production for Profit

Money raising through productive work is widespread in primary and secondary schools. In vocational training programmes, while students learn they also produce. But a high percentage of costs cannot be offset through productive activities. Generally the most effective programmes are operated by NGO's which have greater flexibility. One would assume that the product which is best for the training institution to sell is training itself (Lauglo, 1993).

7. Apprenticeship

Apprenticeship is a way of combining practical experience with theory. Generally there is a formal contract between an employer and a trainee under which the trainee agrees to work for the employer in return for practical experience which makes him a skilled worker. He gets a small wage till he reaches the level of a skilled worker. Thus the tradition of financing apprenticeship involves sharing of costs between employers and trainees (Woodhall, 1987). In India companies are obliged under the provisions of the Apprentices Act to accept a certain percentage of trained technical people for apprenticeship ranging from a period of 1 - 2 years. The apprentices are paid a stipend by the company and the government on a sharing basis.

8. Paid Educational Leave

Another pattern of financing vocational and industrial education in some countries is the provision of paid educational leave. Employers continue to pay wages to employees while they receive part time or full time vocational education. In some countries e.g. France and Sweden there is legislation giving the right of paid educational leave to workers. In some other countries there are variations in the method of financing paid educational leave. A study in 1976 concluded that the system shifts the burden on the employers and creates many ambiguous situations. Almost all countries make the financing of educational leave the responsibility of the community. Therefore paid educational leave also becomes another way of distributing costs between the employers, workers and tax payers (Woodhall, 1987).

9. Non-Government Organizations / Voluntary Organizations

-- The involvement of Non-Government Organizations (NGO's) / Voluntary Organizations in the implementation of VET is yet another way of cost sharing or financing of vocational programmes. Sometimes NGO's are charitable institutions working with the aim of upliftment of weaker and poorer sections of the society. Such institutions may have their own infrastucture and when they come forward to participate in VET, they can be successful especially in conducting short term training programmes in the rural or urban informal sectors. At times they provide education and training entirely from their own resources and at other times they receive grants or subsidies from the government.

-- In developing countries, the involvement of the NGO's in vocational training is assuming greater importance as governments continue their search for partners to share costs on training. In India e.g. the Society for Rural Industrialization in Ranchi Bihar is conducting vocational training courses related to rural technology for the poor tribal people of the local region. Grants are given by the central government and other agencies but the organization has to bear responsibility for some part of the costs. Similarly there are many other agencies voluntarily engaged in educational and training activities.

-- In the Philippines too, the involvement of NGO's in the social development process of the country has gained momentum in the last few years. Dualtech has been offering vocational training in Manila and other parts of the Philippines through the dual system with the involvement of the companies. It started its activities in 1982 with contributions from the industry and donations from the Hanns Seidel Foundation in Germany.

-- Since 1990 Dualtech has become more independent in its financing by adopting the dual system through which there is a sharing of costs with the industry. A large number of students from the lower income group are trained and 15 % of the poorest students are given scholarships. The NGO tries to maximize its resources through optimum utilization of existing facilities for training. When not in use for training, the facilities are used for commercial production on a small scale. In 1993 the organization had an operating budget of $ 600,000, of which 95 % came from the industry and 5 % from the Hanns Seidel Foundation (Dualtech, 1993).

10. Advantages and Disadvantages

Advantages	Disadvantages
- Training fees enhance efficiency and contribute resources as well. Participants are likely to pay for training if it is of good quality and can bring personal benefits and high private rates of return.	- Fees affect poor students or the underprivileged as they may not get access to training. - Training fees cannot fully support programme costs.
- Fee level can control excessive demand as fees can be raised if there is more demand. - If fees are high the quality may improve. - Fees are found to be effective in financing short term training in the informal sector. Master craftsmen are paid small stipends for additional training which they give in approved sites. This is more economical than organized formal training (Herschbach, 1993).	- If fee levels are too low it affects incentive to be responsive to students as the income from fees comprises only a small portion of the budget. In Sri Lanka the Foreman Training Institute recovers 10 % from fees paid by students and employers and government pays the remaining 90 %. The Institute is not concerned to observe economy measures, have a relevant curriculum and respond to market needs (Bressler and Hultin, 1987).
	- Fellowship programmes can be expensive for governments as there are higher administrative and management costs (Herschbach, 1993). - Fellowship programmes are subject to political interference.
- Loans are good for financing short term training.	- Loans involve problems of disbursements, collecting repayments and preventing defaults. - Loans do not lead to greater equity as affluent students are in a better position to make use of them (Psacharopoulos and Woodhall, 1985).
- Sale of training services facilitate additional income for Vocational Training Institutes.	- Too much emphasis on training services detract from the main function of Vocational Training Institutes which is vocational training.
- Co-financing agreements raise the resource level of VTI's.	
- Training can be organized in accordance with demand and therefore enhance training-employment linkages.	
- Dual training system is beneficial to firms although cost figures are difficult to calculate due to hidden expenditures e.g. breakage and waste of materials, lower productivity of experienced workers who spend time in instructing apprentices. Work of apprentices also offsets costs.	- In the dual training system there can be imbalance between training demand and placement opportunities. To regulate imbalance, training workshops are set up in larger firms for supplementing on-the-job training. In countries which do not have a tradition of shared responsability, dual system can be exploited by firms e.g. the firms can use trainees as cheap labour.

Advantages	Disadvantages
- Dual system is an efficient system of financing by individual firms and it is doubtful if better results could be achieved in Germany with another financing system. From 1980 to 1984 the number of college graduates entering the dual system rose from 20,000 to 80,000 (Schmidt, 1985). - Production for profit can offset a small percentage of costs. In low income countries school production may help to supply goods and services when there are shortages (Herschbach, 1993). - Paid educational leave motivates the workers/employees to upgrade their skill levels. Higher and more skills contribute to productivity.	- Training by firms can meet only a part of the demand for training and cannot help to solve such problems as training of people with learning difficulties, language defects etc. (Schmidt, 1985). - Sometimes institutions pay more attention to production activities than devoting time and effort to formal learning.
- NGO'S generally work for charitable causes contributing to the socio-economic development of the country. When they become involved in vocational training they take over the liability of financing some of the costs which would otherwise fall on the government. - As they are highly motivated and often work for the upliftment of the poorer and weaker sections of the society, their contribution leads to social equity. - They are mostly very successful in providing short term training. - NGO's operating in the rural and urban informal sectors generally have a good knowledge of the local market. Thus they can effectively link training with the local employment requirement. - Non-profit making NGO's generally have dedicated persons on their management. They are keenly-engaged in offering good quality vocational training and can thus provide effective support to vocational training systems.	- As NGO's are not always subject to external scrutiny they may not maintain a high standard of training. - They may also have problems of certification especially if they are very small organizations working in the rural or urban informal sectors. - Sometimes NGO's may experience a shortage of resources. In such circumstances some of them are found to have an over dependence on foreign donors.

11. Policy Implications

-- There are limits to which fees can be used to finance VET. Too much reliance on fees is not advisable as it cannot fully support training costs.

-- The most efficient way would be for governments to give subsidies to complement the use of fees.

-- Fees could be high enough to generate adequate income but not so high as to stifle the demand (Herschbach, 1993).

-- Fellowships are not effective in low income countries. The more affluent usually benefit more (Herschbach, 1993). The system of student loans is not very prevalent in developing countries.

-- While sale of training and non-training services could become a secondary source of income, it should not become the main objective of Vocational Training Institutes. The Institutes should primarily concentrate on development and provision of training.

-- Co-financing agreements raise the volume of resources available for vocational training. Institutes which have such agreements keep their courses updated and relevant to new technology (Ducci, 1991).

-- Dual system is an effective system of financing by individual firms. It is beneficial to firms, trainees and the society. The dual system involves collaborative financing with contributions from tax revenues, enterprises and the trainees. Mobilization of additional resources is achieved as there are close links with enterprises and a rough balance between demand and supply. Training in the dual system is successful when there is a constructive collaboration between social partners and adequate potential for placement. Training is also less likely to be obsolete as close links with employers are maintained (Herschbach, 1993).

-- Production for profit is not a reliable way to generate a large amount of resources for formal VET programmes. Production activities in formal VET should be limited so that more time is spent on formal learning. Local institutions will also require some autonomy for introducing a curriculum shaped by local production requirements (Herschbach, 1993).

-- Paid educational leave is a good way to upgrade the skills of an employee. While the burden of financing may become shared, the system promotes motivation in the workers to enhance their skills and qualifications thereby contributing to productivity and economic growth.

-- In the developing countries the involvement of NGO's in vocational training is gradually assuming greater importance. They not only share the financial burden but some of them are known to work for the upliftment of the downtrodden and weaker sections of the society. Thus they support the vocational training systems by helping to equalize opportunity in training for all and contribute to the social developmental process. They should be encouraged to come forward in closer partnership with the governments in organizing VET.

V. INTERNATIONAL DONOR ASSISTANCE

-- Donor support plays a very important role in developing VET systems.

-- In many developing countries the large amount of international aid has contributed to the setting up of a base of training capacity. Infrastructure and facilities have been created, staff trained and instructional systems implemented through donor assistance. Mostly donors provide financial resources for capital costs and it is limited for short periods (Herschbach, 1993).

-- In the 1980's, international assistance to vocational and technical education and training averaged about $ 600 million annually of which the World Bank provided 45 %, bilateral agencies 30 % and other multilateral agencies 25%. Approximately 40 % of multilateral assistance for education was used to support VET programmes. NGO's and private sources also made a sizable contribution but the exact amount is not known (World Bank, 1991).

-- From 1963 to 1976, 40% of lending for education by the World Bank was for VET at the secondary and post secondary levels. But evaluations conducted in the 1970's regarding cost effectiveness of vocational schooling especially diversified schools began to raise doubts. The World Bank lending then began to shift from diversified vocational education to centre based vocational training and development of national authorities (World Bank, 1991).

-- In Africa about 7 % of direct international aid goes to finance primary education, 40 % to secondary education and 17 % to VET. For every S 1 spent on a primary school pupil, S 11 is spent on a secondary school student and S 182 on a VET student (World Bank, 1988).

-- In Latin American countries much of the institutional infrastructure for VET was built through international donor assistance. A study of SENA in the 1970's showed that it had taken the maximum advantage of technical assistance offered by foreign governments and international organisations. The Brazilian SENAI at present benefits from assistance of nearly all countries of the EEC and Canada, Israel, Japan and USA (Ducci, 1991). In the beginning vocational training institutions sought international support for starting the Institution. Subsequently international resources tried to achieve the transfer of productive technology which would be appropriate for national development.

-- Among multinational donors a very high amount goes towards capital expenditures and among bilateral donors a greater share goes for technical assistance and overseas fellowships at the expense of support for recurrent costs (World Bank 1988).

1. Advantages and Disadvantages

1. Advantages

- Donor assistance helps to set up vocational training institutions.

- In some of the low income countries, but for donor support, it may not be possible to create infrastucture required for VET. Donor assistance facilitates transfer of latest productive technology to low income countries which can stimulate economic growth.

- Donors provide technical assistance from countries which have been successful in vocational training.

Disadvantages

- VET systems require long term support as they take long periods to mature, sometimes decades. Donor assistance is generally short term, sometimes for a few years. Donor agencies generally do not make long term commitments. This limits the effectiveness of assistance as recipient countries are not able to make long term plans.

- Donor agencies like to fund capital expenditure as it is easier to calculate and measure. Capital investments such as newly constructed buildings are visible and proof of the contribution made by the donor and therefore said to have greater impact. Extensive facilities are thus built which may not get adequate recurrent support from governments because they do not have adequate resources (Herschbach, 1993).

2. Policy Implications

-- Donor assistance is found to concentrate on capital costs creating large training facilities. Programmes cannot operate successfully without adequate support of recurrent expenditure by the host country. Therefore the size of the project to be funded by the donor and its duration should be based on the capacity of the recurrent funding available. Otherwise a project started with good intentions may start malfunctioning. The most successful donor projects are those which lay emphasis on strengthening the management and upgrading the quality of staff of training institutions (Herschbach, 1993).

-- Distortions should be avoided between over importance on capital expenditure as compared with recurrent costs. If initial investments are very extensive, countries may not be able to sustain VET institutions. When this happens the quality of the programmes in the institutions deteriorate and the project does not yield adequate return on the investment.

-- Donor assistance is most effective when a moderate level of finance is provided over a long period of time (Herschbach, 1993). Long term partnership with governments helps them in their efforts to build proper training facilities.

-- The host country should strengthen its essential systems so as to sustain the project long after the donor assistance is over.

VI. CONCLUSION

Governments will continue to finance VET through public revenue as the overall responsibility for development of human resources in the country rests with it. Without adequate investment in education, it is almost impossible to promote development. Government support in financing VET will therefore continue to flow and remain the most reliable.

With diversification of financing mechanisms however, larger resources are available for creating more training opportunities. But the problems of financing VET cannot be solved entirely through diversification of resources. Efforts have to be made to better utilize available resources by removing existing inefficiencies, stricter accountability, improving organizational structures and proper application of new information technology. Vocational training systems should remain flexible with the ability to adapt to the changing social, economic and technological requirements of the country. To keep vocational training dynamic the following should be borne in mind: --

-- Public revenues are used mainly to finance pre-employment VET but pre-service and in-service VET is also being supported. Vocational Training Institutions funded through national budgets have more stability as there is a consistent flow of resources and the institutions can plan its training possibilities accordingly. When there is a reduction in the budget due to shortage in availability of overall resources it could affect the training programme in quantitative and qualitative terms.

-- Single employer financing in Japan has proved very successful. However the strong cultural traditions prevalent in the Japanese society have in some measure contributed to making this training system the backbone of the growing economy. As a mechanism of financing it is highly recommended if it works as well in other parts of the world.

-- Excessive dependence on payroll levies as an important financing mode has to change slowly. There has been criticism that taxes imposed on employers eventually discourage the demand for manpower. Payroll levies have however been effective in building national training capacity especially in middle income countries.

-- Tax rebates have been effective in financing in-service training and less effective in pre-employment training. Small and medium sized enterprises do not make much use of it.

-- Fees can easily finance VET but there are limits on the amount of resources that can be generated. Fees are a better way to finance short term training.

-- Fellowship and loans do not generally work in developing countries.

-- Production for profit is effective in financing VET for poor youth, unemployed school leavers and disadvantaged adults. It works best in programmes operated by NGO's.

-- While co-financing agreements are emerging as a popular method of generating resources, other sources of funding are required for providing financial stability. Agreements with firms and enterprises bring training institutions into closer contact with market requirements and with the emerging of new technology and bring better prospects of return. However generally, only those sectors which have enough resources can propose significant agreements (Ducci, 1991). Donations from the private sector in exchange for their involvement in the curriculum design of training programmes, and membership of governing boards can also be explored.

-- The Dual System is an efficient system of financing by individual enterprises. Firms provide training voluntarily at their own expense as they believe it is the best way to train a skilled workforce according to their requirement. They also demonstrate a social responsibility for training as a contribution to economic development. But it is not only the firm which invests in the trainee. The trainee does his share of work, thus to a certain degree offsetting the expenditure the firm incurs on him. The costs of vocational training also reduce the tax on the firm's profits.

-- Although the dual system involves collaborative financing with contributions from tax revenues, enterprises and the trainees, it does not reduce much the overall tax burden on public revenues but the employers play a very crucial role in the training through apprenticeship. Training in the dual system is very successful when there is a constructive collaboration between social partners and adequate potential for placement. It is widely acknowledged that one of the reasons for the economic success of Germany is the vocational training of its labour force.

-- The involvement of NGO's in cost sharing for VET in developing countries is gaining momentum. Not only do these organisations bear a part of the financial liability but they are also known to work with a commitment for the socio-economic development of the country. Governments should try to bring forward more NGO's as partners in vocational training.

-- Donor Assistance is a very important source of financing vocational training systems. It is effective in all types of VET programmes but it has its limitations. Generally building of institutional infrastructure is through support for capital expenditure. But donor assistance can cause inefficiencies if the project cycles are too short and the host country is not able to maintain the quality of the institution. Donor assistance should have long term development policies, resources should be concentrated and special attention should be paid to recurrent funding (Herschbach, 1993).

Vocational training systems should continue its search for generating additional resources through the public and private sector such as government subsidies, enrolment fees in the long term or contributions from associations and unions. They should maintain a certain proportion of income from payroll levies and use it effectively for encouraging co-financing with enterprises. They could include decentralized and local bodies in the sale of general services to adapt to the new requirements of the governments. They should also make use of non-monetary contributions in the form of equipment and new materials for the training centres which may be donated through agreements with business.

If vocational training systems are very large and programme activities cannot be adequately supported, it may be better to reduce the programmes and consolidate the existing resources and reallocate them appropriately. The important thing is effective management of the institution through a proper balance between capital and recurrent expenditures. All training components should be strengthened and emphasis should be on quality training. The management should work closely with the employers.

Diversification of resources is not easily possible in countries which have highly centralized systems with rigid controls. New ways of raising resources will require new working relationships with religious bodies, trade associations and that requires delegation of authority. Governments have to consider making these changes (Herschbach, 1993).

The economic situation in the country also affects the financing mechanism. In low income countries there is a shortage of resources in the Government. At the same time it is not possible to find many suitable alternatives to government funding. In the middle income countries there are greater possibilities for diversifying financing and experience has shown that it is possible to have different forms of vocational education and training.

Strategies for financing VET have to take into account the pattern of economic development. There is no optimal combination of financing. In most countries there is a need to diversify training and new ways of financing may lead to new ways of training. Attempts to diversify financing will ensure stability in the long term as it will reduce excessive dependence on a single source. If there is financial stability, it will lead to better quality VET programmes (Herschbach, 1993).

There is no single or universal solution for financing vocational training and no one method which can serve all sections of the society. There are many different limitations in every system. Questions about who should meet the costs, the employers, individuals or the government are raised from time to time. A World Bank study reviewed the literature on these questions and concluded that the survey eventually raised more questions than it answered and that there is no universal solution about the absolute effectiveness of any one method (Zymelman, 1976). A combination of funding leads to greater access in VET. Diversifying financing will create greater opportunities and improve the quality of training (Herschbach, 1993). Governments have to realize that funding from public revenue is not the only way to finance investment in vocational education and training. There should be a determination to involve employers, individuals and the local communities.

ANNEXURE

TABLE

Country	Year	Total educational Expenditure		Vocational
		As % of GNP	As % of total govt. expenditure	As % of public current expend. on education
Africa				
Botswana	1989	7.5	16.3	6.0
	1991	8.4	12.5	5.5
Cameroon	1990	3.4	19.6	NA
	1991	2.8	6.9	NA
Ghana	1989	3.5	24.3	2.0
	1990	3.3	24.3	4.9
Mauritius	1989	3.5	10.5	1.3
	1990	3.7	11.8	1.2
Ethiopia	1989	4.7	8.8	NA
	1990	4.9	9.4	1.0
America				
Canada	1989	7.1	15.3	NA
	1990	7.4	15.6	NA
Mexico	1990	4.1	NA	6.6
	1991	4.5	NA	6.5
Costa Rica	1990	4.6	20.8	5.6
	1991	4.5	25.2	7.0
United States of America	1988	5.2	12.4	NA
	1989	5.3	12.4	NA
South America				
Argentina	1989	1.5	8.0	11.8
	1990	1.5	10.9	12.6
Chile	1990	2.9	10.4	7.2
	1991	3.0	10.0	6.8
Colombia	1990	2.7	12.4	NA
	1991	2.3	10.9	NA
Equador	1989	2.8	19.1	9.2
	1991	2.6	17.5	9.3
Uruguay	1990	3.1	15.9	10.8
	1991	3.1	16.6	10.7
Asia				
Bangladesh	1989	2.2	10.5	2.1
	1990	2.0	10.3	2.4
China	1989	2.3	12.4	2.8
	1991	2.3	NA	NA
India	1988	3.1	NA	NA
	1989	3.1	NA	NA
Indonesia	1980	1.7	8.9	NA
	1988	0.9	4.3	10.3
Israel	1989	6.0	10.4	15.4
	1990	8.9	NA	NA
Japan	1988	4.7	16.2	NA
	1989	4.7	16.5	NA
Jordan	1990	4.3	8.5	NA
	1991	3.9	9.2	1.5

Country	Year	Total educational Expenditure		Vocational
		As % of GNP	As % of total govt. expenditure	As % of public current expend. on education
Malaysia	1990	5.5	18.3	2.6
	1991	5.6	18.0	3.2
Nepal	1981	2.1	13.6	NA
	1985	2.8	10.8	1.3
Pakistan	1986	2.8	NA	9.7
	1987	3.2	NA	10.3
Philippines	1990	2.9	10.1	NA
	1991	3.0	10.5	NA
Singapore	1987	3.9	11.5	5.4
	1988	3.4	NA	NA
Europe				
France	1990	5.4	NA	11.4
	1991	5.8	NA	11.5
Germany	1989	4.1	8.8	NA
	1990	4.1	8.6	NA
Norway	1990	7.9	14.6	NA
	1991	8.2	14.8	NA
Sweden	1989	7.3	13.1	NA
	1990	7.7	13.8	NA
United Kingdom	1989	4.7	NA	NA
	1990	4.9	NA	NA
Oceania				
Australia	1989	5.1	12.7	NA
	1990	5.4	14.8	NA
Fiji	1986	6.0	NA	NA
	1989	5.0	15.4	2.8

Source: UNESCO, 1993. Statistical Yearbook.
Key: NA = not available

REFERENCES

-- Atchoarena, D. 1993. Financing of Vocational Training. Working Document. IIEP. Paris.

-- Bas, D; Castro, CM. 1989. Evaluating the financing of training. ILO, Geneva.

-- Benson. C.S. 1987. Educational Financing. In: Economics of Education Research and Studies, edited by Psacharopoulos, G. Pergamon Press, Oxford.

-- Bressler, J and Hultin, M. 1987. Summative evaluation of a SIDA supported training project in the Foreman Training Institute, Narahenpita, Colombo. SIDA, Stockholm

-- CINTERFOR/ILO, 1991. Vocational Training on the Threshold of the 1990's. 2 Volumes. PHREE Background Paper 91/35. World Bank, Washington DC.

-- Cuervo, A.C; Steenwyk, N. 1986. Colombia's Servicio Nacional de Aprendizaje (SENA): Case study of an effective training system. Cheechi and company. Washington, DC.

-- Dore, R; Sako, M. 1987. Vocational Education and Training in Japan. A study commissioned by the Manpower Services Commission, London: Centre for Japanese and Comparative Industrial Research, Imperial College, University of London.

-- Dualtech, 1993. Report of the Joint Executive and Management Committee for 1993. Dualtech, Philippines.

-- Ducci, M.A. 1983. Vocational Training. An Open Way. Studies and Monographs N° 62. ILO (CINTERFOR).

-- Ducci, M.A. 1991. Financing of Vocational Training in Latin America. Training Discussion Paper N° 71, ILO. Geneva.

-- Eicher, Claude, J. 1989. The Financial Crisis in Educational Systems. In: The Prospects for Educational Planning, edited by Caillods, F. IIEP, UNESCO, Paris.

-- Federal Ministry of Education and Science, 1993/94. Basic and Structural Data, Federal Ministry of Education and Science, Bonn.

-- Greinert, W.D. 1992. The dual system of vocational training in the Federal Republic of Germany. Structure and function. G.T.Z., Eschborn.

-- Hegelheimer, A. 1986. Financing of Vocational Training. German Foundation for International Development, Mannheim.

-- Herschbach, Dennis R. 1993. Financing Vocational Education and Training in Developing Countries. Training Discussion Paper N° 111, ILO. Geneva.

-- Inoue, K. 1985. The education and training of industrial manpower in Japan. World Bank Staff Papers 729. Washington.

-- Inter-American Centre for Research and Documentation for Vocational Training. 1991. Vocational Education on the Treshold of the 1990's. Volume I & II. The World Bank, Washington, DC.

-- Johnson, R. 1979. Education and Training in the 80's. Department of Employment Gazette 87.

-- Kugler, B; Reyes, A. 1978. Financing of Technical and Vocational Training in Latin America. In: Inter-American Development Bank. The Financing of Education in Latin America. Washington DC.

-- Lauglo, J. 1993. Vocational Training: Analysis of Policy and Modes. Case Studies of Sweden, Germany and Japan. International Institute for Educational Planning, Paris.

-- Lourie, S. 1987. New strategies for financing diversified forms of education and training. International Institute for Educational Planning, Paris.

-- Lauterbach, Uwe. 1985. Vocational Training in the USA. In: Journal for Educational and Social Science Research. Frankfurt.

-- Lenhart, V. 1988. Education, Training and Industry in the Federal Republic of Germany. In: Hermann Röhrs (ed), Vocational and General Education in Western Industrial Countries. Symposium Books. London.

-- Mc Cormick, K. 1989. Towards a life long learning society? The reform of continuing vocational education and training in Japan. In: Comparative Education 25 (N° 2).

-- Mincer, T. 1962. On the Job Training: Costs, Returns and some Implications. T. Polit. Econ. 70

-- OECD, 1983. The Future of Vocational Education and Training. OECD, Paris.

-- OECD, 1991. Labour Force Statistics 1969 - 1989. OECD, Paris.

-- Pang, E.F; Salome, B. 1986. In-service training and industrial restructuring in Singapore. Economic Development Centre, OECD, Paris.

-- Pedder, R.A. 1989. Enterprise Based Vocational Training. A review of the extent to which employers and employer's organizations in nine countries in Asia and the Pacific are involved in the planning, policy development and provision of vocational education and training. Asian and Pacific Skill Development Programme, ILO. Islamabad.

-- Psacharopoulos, G; Woodhall, M. 1985. Education for Development. An Analysis of Investment Choices. Oxford University Press, London.

-- Raggatt, P. 1988. Quality control in the dual system of West Germany. In: Oxford Review of Education, 14 (N° 2)

-- Schmidt, H. 1985. Financing of Vocational Education and Training in Germany. (Federal Institute of Vocational Training). (unpublished)

-- Schönbach, K.H.; Wasem, J; Kühnen, H. 1989. The Dual System of Vocational Training. Friedrich-Ebert-Stiftung, Bonn.

-- Schoenfeldt, E. 1986. The Dual System of Vocational Education. German Foundation for International Development, Mannheim.

-- Tibi, Claude. 1989. The Financing of Education: Impact of the Crisis and the Adjustment Process. In: The Prospects for Educational Planning, edited by Caillods, F. IIEP, UNESCO, Paris.

-- Timmermann, D. 1993. Costs and Financing of Dual Training in Germany: Is there any Lesson for other Countries? Paper submitted to the International Symposium on the Economics of Education. Manchester, UK, May 1993. (unpublished)

-- UNESCO, 1979. Developments in Technical and Vocational Education. A comparative Study. UNESCO, Paris.

-- UNESCO, 1993. Statistical Yearbook. UNESCO, Paris.

-- Von Gilardi, R; Schultz, W. 1989. In-Firm Trainers of Young People in the Framework of the Dual Vocational Training System of the Federal Republic of Germany. CEDEFOP - European Centre for the Development of Vocational Training. Berlin.

-- Woodhall, M. 1987. Financing Vocational and Industrial Education. In: Economics of Education Research and Studies, edited by Psacharopoulos, G. Pergamon Press, Oxford.

-- World Bank, 1986. Financing Education in Developing Countries. An exploration of Policy Options. The World Bank, Washington DC.

-- World Bank, 1988. Education in Sub-Saharan Africa. Policies for adjustment, revitalization and expansion. The World Bank. Washington DC.

-- World Bank, 1991. Vocational and Technical Education and Training. A World Bank Policy Paper. Population and Human Resources Department, The World Bank, Washington DC.

-- Zymelman, M. 1976. The Economic Evaluation of Vocational Training Programmes. John Hopkins University Press, Baltimore, Maryland.

ABBREVIATIONS

CONET	- National Council for Technical Education, Argentina
INACAP	- National Institute for Training, Chile
NGO	- Non-Government Organisation
OTE	- Technical Execution Organisation, Chile
SENA	- National Training Service, Colombia
SENAEM	- National Employment Secretariat, Chile
SENAI	- National Service for Industrial Training, Brazil
SENATI	- National Service for Apprenticeships and Industrial Employment, Peru
SENCE	- National Service for Training and Employment, Chile
VET	- Vocational Education and Training
VTI	- Vocational Training Institute

Division 42
Governance and Democracy

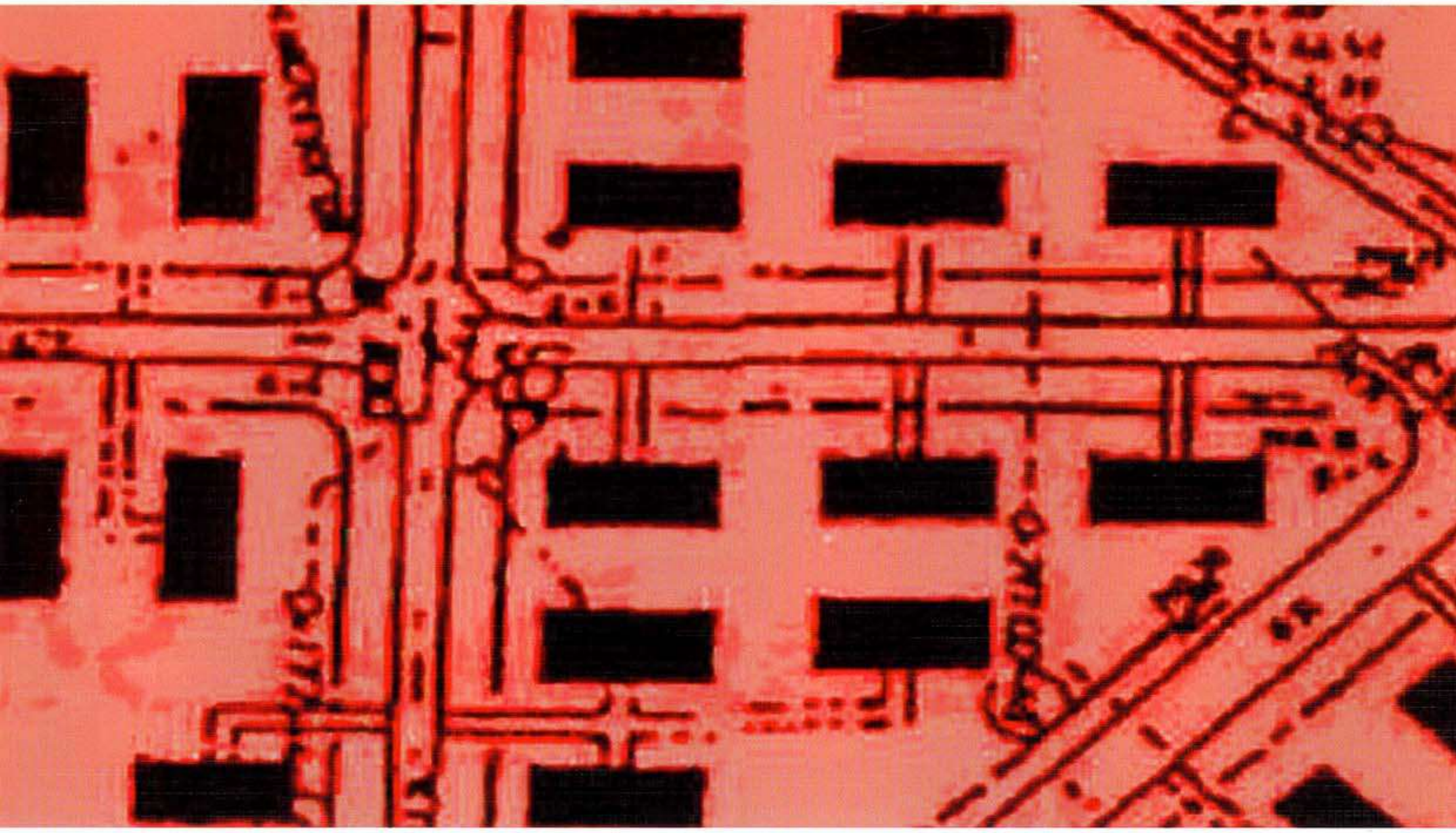

Guidelines

for

Building Measures

after Disasters and Conflicts

Eschborn 2003

Deutsche Gesellschaft für
Technische Zusammenarbeit (GTZ) GmbH

Division 42
Governance and Democracy

Guidelines

for

Building Measures

after Disasters and Conflicts

Autoren: Horst Valentin Kreutner, Birgit Kundermann und Kiran Mukerji

Horst Valentin Kreutner (Dipl.-Ing. Architect) is an independent consultant since 2000. He previously worked for the building industry (Hochtief) for 4 years and 30 years for GAWI/GTZ. He was the spokesman of GTZ's Building Section for 8 years.
Birgit Kundermann (Dipl.-Ing. Agr.) is an independent consultant since 1999 in the fields of crisis prevention and development oriented emergency aid. She previously worked for 8 years for GTZ abroad.
Kiran Mukerji (Dipl.-Ing. Architect) is an independent consultant and works in the field of planning and building in the tropics since 1973, both as a researcher as well as coordinator of various building projects.

Contacts:

Thomas Schwabe
GTZ Building Team
Mail: Thomas.Schwabe@gtz.de

Ralf Kaltofen
Development-oriented Emergency Aid
Mail: Ralf.Kaltofen@gtz.de

Published by:
Deutsche Gesellschaft für
Technische Zusammenarbeit (GTZ) GmbH
Dag-Hammarskjöld-Weg 1-5
P.O. Box 5180,
D-65726 Eschborn

Telephone: +49(0)6196-79-0
Telefax: +49(0)6196-79-6170

Internet: http://www.gtz.de

Person responsible:
Bernd Hoffmann

Authors:
Horst Valentin Kreutner (Architekt, Dipl.-Ing.)
Birgit Kundermann (Dipl.-Ing. Agr.)
Kiran Mukerji (Architekt, Dipl.-Ing.)

Advisor:
Ralf Kaltofen

Translation team:
Silke Freitag
Kiran Mukerji

Printed by:
Family Print Production Services, München

March 2003

Deutsche Gesellschaft für
Technische Zusammenarbeit (GTZ) GmbH

PREFACE

In the past years the global increase in severe natural disasters and the consequences of wars have led to an immense necessity of fostering the rehabilitation and reconstruction of living space especially in South-East Europe and Western Asia. The affected countries themselves can often only make little contributions to that. In the last decade alone, the German Federal Ministry for Economic Cooperation and Development (BMZ), above all, charged the Deutsche Gesellschaft für Technische Zusammenarbeit (GTZ), German Technical Cooperation, with the execution of various redevelopment and reconstruction measures for the accommodation of refugees, displaced people and disaster victims.

Due to the special demands on the construction measures in the context of disasters and conflicts, the BMZ assigned the GTZ to develop guidelines for their conception as well as practical recommendations for their execution. Experience from the most different emergency situations have been specially compiled to elaborate the following Guidelines.

These Guidelines with the annexes present various practical references to the planning, procedures, and execution of reconstruction measures with special relevance to emergency situations after disasters and conflicts. It is addressed to external experts, to national and international organisations, project planners, consultants, project partners and project executing agencies, as well as to those employees of the GTZ who are in charge of the planning and execution of construction measures and their operation in emergency situations after disasters and conflicts.

The concepts and proposals presented in the Guidelines are based on several years of experience of GTZ's technical personnel and aid organisations in the Balkan regions (Croatia, Bosnia and Herzegovina, Albania, Kosovo), in Turkey, Azerbaijan, Sri Lanka, India, Cambodia, as well as Central and Latin America. The Guidelines are to be seen from the point of view of a non-commercial general contractor (NGC) with a development-policy assignment who takes over the responsibility for the realisation of all measures and in doing so generally engages the private construction industry for the technical implementation.

Special thanks are extended to the authors Horst Valentin Kreutner, Birgit Kundermann and Kiran Mukerji, who elaborated these Guidelines. We hope that the Guidelines will meet your interest and look forward to an expert interchange and constructive criticism.

Bernd Hoffmann
Head of Division

Ralf Kaltofen
Emergency and Refugee Aid

GTZ - a service enterprise for international cooperation

The Deutsche Gesellschaft für Technische Zusammenarbeit (GTZ) GmbH, German Technical Cooperation, is a government-owned corporation with worldwide operations. Its development-policy mandate is to help improve the standard of living and prospects of people in partner countries all over the world, whilst stabilising the natural resource base on which life depends. GTZ is responsible for designing, planning and implementing programmes and projects in partner countries oriented by the German Government's development policy guidelines and objectives. The GTZ's main commissioning body is the German Government through the Federal Ministry for Economic Cooperation and Development (BMZ) and other ministries such as the Federal Foreign Office. Other clients of GTZ include the European Commission, UN organisations, the World Bank and regional development banks. Increasingly, foreign governments or institutions also directly commission GTZ services.

Technical Cooperation is playing a growing role in strengthening the capabilities of both people and organisations in partner countries. In achieving this, the institution is itself changing in the process: In the past, answers were found to clearly delineated problems, but today's intricate and complex issues call for more sophisticated approach. Sustaining improvements in people's living conditions in our partner countries in the long term crucially depends on the political, economic and social frameworks in place.

Where crises, conflicts or disasters create acute needs that threaten survival, GTZ provides development-oriented emergency aid (DEA). It has become increasingly apparent in recent years that the loss and damage can be averted by preventive measures, so approaches, instruments and measures have been developed to manage conflicts and prevent crises and disasters.

Refugee aid measures constitute an important activity area of DEA. Refugee programmes address people, who were forced to leave their homelands as victims of war or violent domestic conflicts, or on account of other disasters. The Guidelines presented here offer a general overview of building measures following disasters and conflicts, and summarise experiences and perceptions of GTZ.

Contents

1. Summary

Nowadays the consequences of natural disasters annually affect over 200 million people and the number of refugees and displaced persons amounts to over 20 million. This results in an immense necessity of reconstructing destroyed living space or providing temporary living space. The approach of development-oriented emergency aid (DEA) offers a framework within which a variety of questions that go beyond the actual technical construction measure can be discussed, especially those dealing with the working concepts of emergency aid, refugee aid, disaster precaution, as well as rehabilitation and reconstruction.

The development-policy demands on the construction of living space vary: in the case of war, refugees and displaced persons are to be accommodated temporarily as additional persons - without having knowledge about the duration of this accommodation. In the case of those returning after martial conflicts, quite often questions regarding settlement and property rights have to be clarified before a reconstruction of destroyed housing in favour of reintegrating refugees can take place. Considerable destruction triggered by natural disasters claims an extremely high number of homeless so that only part of the needy can be taken care of. Moreover, it is necessary to decrease the susceptibility to future disasters. People in need of dwelling space, possible beneficiaries, and potential future residents have to be selected on the basis of a thorough analysis, if disparities and potential conflicts are to be avoided by this measure. This becomes especially necessary when conflicts have led to flight and destruction.

The reconstruction of dwelling space in particular can contribute considerably to the stabilisation of the living situation of the affected population through more personal security and well-being and through re-establishing a productive everyday life. Supportive measures can strengthen the motivation for reconstruction and boost the local construction industry. Taking into consideration appropriate technical aspects of construction and settlement can decrease the susceptibility to future disasters. Thus, construction measures in the aftermath of disasters and conflicts constitute a fundamental contribution to redevelopment. Criteria such as significance, participation and self-help, poverty reduction, conformism, possible effects of conflicts, the reduction of vulnerability and, last but not least, sustainability have to be considered and weighed up in order to ensure the development-policy quality of the measures. Apart from that, main priority has to be given to the economic viability of the measures.

The concepts and suggestions presented are to be seen from the point of view of an organisation acting as a kind of a non-commercial general contractor (NGC) or an implementing consultant with a development-policy assignment. The NGC or implementing consultant “takes over” the responsibility for reaching the goals of all measures. He generally does not “undertake” the technical implementation himself, but instead employs the forces of the local and international construction industry. The financing of the projects in question is effected through technical cooperation (TC), financial cooperation (FC), development banks, the European Union (EU), the United Nations (UN), or other donors.

The methodological approach described in these Guidelines assumes that a donor manifests the intention of support on the basis of which a situation analysis or a rapid assessment is carried out by the NGC, and from this an offer or an implementation proposal is drawn up. It describes the individual steps starting with the placing of a commission via the implementation arrangement with the local project-executing organisation and all further planning measures required to carry out the commission up to the cooperation with companies of the private construction industry. For the execution of construction measures contractor models and self-help models are presented in detail. They conclude with the handing over of the construction works and recommendations for the aftercare operations and documentation of the projects.

Various aspects to be considered are explained in short phrases, ranging from the defining of the commission and the proceedings during field work, via the analysis of the local construction industry, aspects regarding technical infrastructure and supplies that are connected to residential building, up to questions concerning the target groups.

The execution of construction measures in cooperation with the local and international construction industry (contractor models) comprises the presentation of the different concepts of rehabilitation and rededication of public buildings for the short-term accommodation of homeless people, as well as the rehabilitation of damaged or destroyed private houses. Moreover, the construction of new housing settlements is treated as an alternative in cases when rehabilitation models do not appear to be adequate for the solution of the emergency situation. All questions essential to the role and responsibility of the project management and those related to contract procedures and awarding of contracts are discussed.

When executing the construction measures by self-help, the target groups are given support in the form of consultancy, material and financial aid. Models to support individual family self-help as well as community self-help for the construction of accommodations and community facilities are discussed. The building yard model, which basically refers to material aid and assumes an execution of the construction measure by self-help, but which, depending on the situation, can in addition include further technical support, is also presented.

And finally, basic planning criteria of simple constructions are summarised, explaining the most important protection measures against natural hazards or measures to reduce the risk of destruction due to natural disasters.

These Guidelines concentrate on construction measures that require engineering expertise and management skills in the field of construction.

The annexes comprise a selection of exemplary forms for proceedings, the execution of tenders, samples of guarantee, and practical examples of planning and construction contracts, which of course have to be adapted to the respective situations.

Case studies of GTZ projects are inserted at different places to illustrate some of the models and procedures described, and also present some interesting cost figures.

Humanitarian aid or emergency aid in their narrow sense, which satisfy short-term protection needs against the effects of harsh weather by means of mobile material (e.g. tents), as well as the long-term consultancy of partner countries in the field of residential building construction and housing development, are not part of these Guidelines.

In the case of a GTZ-executed project, these Guidelines do not substitute the internal GTZ organisation directives, “Orientations and Rules” (O + R), which have to be observed in all events.

2. Building measures in development-oriented emergency aid (DEA)

2.1 Development-oriented emergency aid

The objective of development-oriented emergency aid (DEA) is to contribute to lessening people's vulnerability and reducing the dangers to which they are exposed as well as to help alleviate the poverty caused by disasters and crises. This can be realised by preventing or coping with emergency situations on household, regional and international level. According to the development-policy conception of the BMZ, its aim is to ensure the transition from survival aid to reconstruction without interruption.

Development-oriented emergency aid comprises specific initiatives, measures, and reactions to emergency situations in crises, conflicts and disasters, as well as corresponding precautionary measures. They fit into the realm of disaster risk management, crisis prevention and conflict management, emergency aid and humanitarian aid, as well as in refugee programmes, rehabilitation and reconstruction. In certain cases, the "demobilisation and reintegration of ex-combatants" and "integrated de-mining" can also be part of DEA.

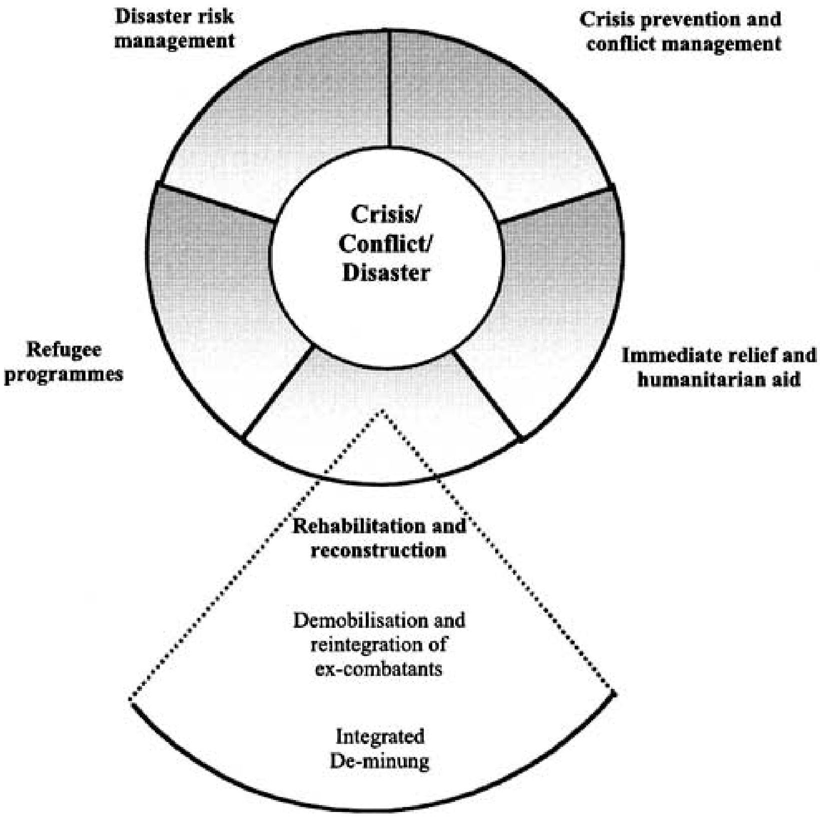

Activity areas of development-oriented emergency aid

In reality, borders between the fields of activity are fluent. After an emergency situation, it is DEA's concern to ensure the participation of the target group and to promote partner institutions already at an early stage and thus be structurally effective at all levels. DEA mostly comprises a package of measures which focus on a specific emergency situation and complement one another. Technical interventions such as the provision of infrastructure or living space are generally connected to consulting functions and a working towards a constructive socio-political development. (See also "Development-oriented emergency aid - GTZ's working principles" in the Bibliography).

2.2 Building measures in the context of development-oriented emergency aid

In emergency situations, the creation of living space contributes to the satisfaction of elementary basic needs. Living space increases the personal security of the people affected, creates privacy, and constitutes an important condition for the establishment of a productive everyday live. When executing building measures after disasters and conflicts the development orientation is reflected in the concentration on local actors (communities, construction companies, sector authorities), in the application of contractor and self-help models (see chapters 5.1 and 5.2) and in the overall capacity-building effects of the measures.

Building measures after disasters and conflicts usually take place within the framework of refugee programmes or reconstruction programmes. In certain cases they can also be considered as emergency aid measures. Disaster risk management with a focus on technical construction concepts is always part of building measures before or after disasters. Possible conflicts are taken into consideration when creating building measures with respect to reducing conflict potential.

Migration movements in the form of suddenly emerging massive surges of refugees or displaced people, but also in the form of creeping rural exodus out of disaster-induced impoverishment are often triggered by crises, conflicts and disasters. Within the framework of rehabilitation and reconstruction, the authorities responsible for the control of migration and new settlements can be given technical advice in connection with the aid measures as well as on issues that go beyond the scope of these Guidelines.

In the case of building measures, the projects are generally concluded with the buildings' acceptance when the actual utilisation starts. Therefore, the preconditions for sustainability have to be established by thorough planning and during implementation. Consultancy and further training of executing organisations and other institutions can be effected to ensure, for example, a better future administration of the dwellings and their connection to the local infrastructure, the living space and economic area. The integration of building measures into an overall concept or programme of DEA, which goes beyond their actual implementation, can guarantee those services even after the practical implementation of the building measures. Necessary accompanying measures can be integrated into this overall concept and aftercare operations following the completion of constructions can be realized more efficiently.

2.2.1 Refugee programmes

Refugee programmes (and correspondingly also programmes for displaced people in their own country) include measures of short-term refugee support in the host region as well as their repatriation and reintegration into their home region. Within projects concerned with the provision of living space for refugees in the host region on a short-term basis, temporary dwellings can be created for the target group. If, for this purpose, private houses or public buildings are rehabilitated in the host region, the building measure itself can also be considered as a long-term reconstruction measure in the host region. The planning and implementation of the building measure takes into consideration the needs of refugees as interim users and those of the host population as end users. In other cases, simple temporary accommodations in camps or collective shelters are established in locations outside the housing area of the host population. An informal after-usage often takes place, but is not subject of the planning and implementation of the building measure itself. Generally, the permanent settlement and integration of refugees in the host region is not part of development-oriented emergency aid. (See also "Development-oriented emergency aid - GTZ's working principles" in the Bibliography)

2.2.2 Rehabilitation and reconstruction

Within the framework of projects of repatriating and reintegrating refugees, permanent housing facilities have to be created and rehabilitated. Thus, technically speaking, they become part of the field of activity of rehabilitation and reconstruction, which aims at re-establishing or even improving the situation before the disaster or crisis. To reintegrate refugees into their home region can be a very complex and costly task, mostly combined with other measures, such as the promotion of economic and social reintegration measures (see also case study L - Sri Lanka). According to the specific context, the reintegration of ex-combatants within building measures can play a crucial role and thus also create better conditions for a peaceful coexistence in the future.

2.2.3 Disaster risk management

In the aftermath of disasters, residential building usually takes place in the form of rehabilitation and reconstruction in close relation to disaster risk management. No matter whether it is about selecting the location or applying the most appropriate construction methods, the reduction of vulnerability to disasters is the main focus, even in the case of repair works. The final utilisation by the population rendered homeless generally constitutes the planning base. In cases where there is a great urgency to provide shelter after a disaster within a very short time for a large group of people, temporary houses in the form of prefabricated structures with a limited life span can be considered (see case studies E - Western Turkey and G - Croatia in these Guidelines). In that case, depending on the aim of the building measure, it falls into the realm of emergency aid, since the urgency and the accommodation of large groups of people have been given priority over more expensive buildings with a long-term useful life. In all cases, building measures entail a massive intervention into the socio-economic environment. Thus, it is not only in the context of conflicts that the consideration of potential conflict effects is imperative (See also GTZ's "Disaster risk management - working concept" in the Bibliography).

2.2.4 Planning horizon and special conditions in emergency situations

Building measures after disasters and conflicts are carried out under considerable time pressure, especially at times when in temperate regions the winter season is about to begin. At the same time planning and implementation have to be carried out under particularly difficult conditions: due to the confusing situation information is often not available or unreliable. Especially during wars and immediately afterwards, planning becomes more difficult due to the unclear planning horizon, such as the duration of the crisis and the changing number of refugees and displaced people. After disasters and wars important road links are disconnected and the infrastructure facilities are partly destroyed. Administrations and executing authorities in the partner countries are overburdened and, after wars, partly staffed with inexperienced employees. The population is primarily concerned with ensuring their immediate survival. High economic losses or incomplete households limit the self-help potential of the people affected. Likewise the local construction industry might be directly hit by destruction.

2.3 Development policy criteria of implementation

The quick accommodation of the people rendered homeless is the objective of housing measures after disasters and conflicts. Generally the commission is accomplished when the building inspection takes place and at the same time the buildings are handed over to the beneficiaries. Development policy criteria of building measures basically refer to the long-term usage. However, the planning and implementation of the building measures include leeway for actions having a crucial influence on the project's development policy orientation via the selection of the implementation model and the implementation partner. In this respect, some of the following criteria tend to have contradicting effects in the practical pursuit. There is no patent remedy -they have to be evaluated in the planning phase according to the respective situation. The economic viability as a further criterion will be discussed in more detail in chapter 6.2.

2.3.1 Significance

The huge number of persons having become homeless due to expulsion and destruction of dwellings leads to a high demand for the re-establishment of living space. At the same time, the provision of shelter constitutes a comparably high individual support as long as it does not involve the utilisation of public buildings for temporary living purposes (see case study C - Bosnia and Herzegovina). In general, the largest part of the re-establishment of living space is carried out by the target groups themselves by self-help and with their own financial resources, partly supported by subsidies and special loan programmes. As a result of the high costs per user, projects of shelter provision generally only reach a small part of the needy - when considering the large number of affected people. The selection of the beneficiaries should therefore be carried out with great care and include criteria of need. In general this is done by local authorities that are sufficiently familiar with the area and the people. However, the financing agency of the aid measures or their appointed general contractor should ensure the definition of the selection criteria, as well as sporadically check and observe the local authority's needs assessment. The project's significance can be controlled by the selection of the models and concepts described in chapter 5.

When rehabilitating private houses, the benefit is also broadly extended to the host population, and in the case of public buildings in favour of the host communities. The self-help models of mutual aid and the building yard model (see case study L - Sri Lanka) can also have the same effect. However, in view of all previous experience, due to the immense back-up intensity, it is not to be generally assumed that self-help can reduce the total costs of the construction project.

The significance of residential building has to be evaluated not only with respect to the direct users but also to the indirect users, who apply the acquired building techniques in future construction projects. This happens, for instance, when the building technique constitutes a model for disaster-oriented building or when the skills transferred by way of training of construction workers consitute an important component.

2.3.2 Participation and self-help

Since building measures constitute a considerable intervention into the local structure, especially in the case of new settlements, all groups that are directly or indirectly involved, are required to participate in the planning and realisation of the measures. These especially include the following groups: the future (interim) users as direct target group, the possible ultimate users, the total population as being indirectly affected in the area, construction companies and the local economy, the local administration and the district authorities. Their active participation ensures the achievement of the project's intended goals: the quality of the process of identification of the beneficiaries and the cooperation with the local population reduces the risk of the buildings being misused after completion of the building measures. Therefore, even if the time pressure is high in most of the cases, the following opportunities should be taken into consideration:

- community participation, even if central project executing organisations and partner institutions assume responsibility;

- participation of organisations of the target groups or representatives (e.g. for refugees without adequate organisation);

- working towards the foundation of an empowered participation forum, where advantages and disadvantages can be considered for all groups and possibilities of reconciling interests can be discussed;

• working towards the involvement of the surrounding area's total population in benefiting from the measures, as well as in their implementation (provision of labour and commissions for local companies, even for smaller works);

• participation of direct beneficiaries in the designing of dwelling space;

• appropriate consideration of the future usage respectively the need of potential future beneficiaries.

Case study **A**

Reconstructions of houses after earthquake in El Salvador

Financing agency:	**Federal Republic of Germany represented by BMZ within development cooperation**
Financing volume:	**1,833,875 euros**
Period:	**2001-2002**

On 13 January 2001 an earthquake measuring 7.6 on the Richter scale hit the coast of El Salvador. On 13 February another earthquake measuring 6.6 on the Richter scale occurred, the epicentre of which was close to San Pedro Nonualco. The second quake, which was limited to just one area, only had a local but destructive impact. The damages covered extensive areas and affected more than 90% of the houses in the urban and rural areas, as well as roads, water supply systems, and the social infrastructure. This earthquake claimed a further 300 dead, approximately 3,000 partly severely injured, more than 32,000 destroyed houses and more than 150,000 homeless.

At the beginning of March 2001, BMZ decided to support the government of El Salvador in reconstruction and assigned the GTZ with the implementation of the project REVIVES (Reconstrucción de Viviendas en El Salvador/reconstruction of houses in El Salvador).

Indisputably, the aim is to reconstruct a significant number of houses. Besides and beyond this, building activities are enriched by complementary components and topics such as gender, training in the building sector, organisation, disaster risk management and improvement of the hygienic situation. In addition to training activities in concrete “learning by doing”, accompanied by intensive consulting with permanent consideration of the highest possible transparency and participation of the most diverse groups, the methodology consists in decision-making. Therefore a complex network of different intervention levels and actors has been created for the implementation, connecting the different measures in the rural as well as the urban area, with the main actors being different groups of the local populations, the local authorities, as well as both of the administration units of the mayor’s offices of San Pedro Nonualco and Santa María Ostuma.

The dual approach is peculiar to the project. On the one hand, earthquake-resistant houses adapted to the corresponding vulnerability to disasters were built in the rural areas. The institution responsible for property rights was contacted and the registration of sites in the national real estate register was supported. Thus the project succeeded in directly supporting families, as well as in making the rural population familiar with the institution and this mechanism. On the other hand, 29 houses with the same characteristics were reconstructed in the urban area, which, in addition, re-established the cultural identity by maintaining the style typical for the region, under the overall control of the municipal administration, the Vice Ministry of Housing, and the cultural council CONCULTURA. In the urban area, the planning of reconstruction resulted in the local development plan. Executing reconstruction with restoration character has so far been an unprecedented measure in El Salvador und has been greatly appreciated by both national institutions. At the same time, the population was sensitised to disaster risks with accompanying modules and their self-help capabilities strengthened, both practically and theoretically, paying main attention to women’s participation in all matters. Personal contributions and mutual assistance in solidarity showed that the social cohesion can be fostered by joint aims, even if in some cases a lot of convincing had to be done first.

The project implementation lasted until the end of 2002. A total of 333 houses had been reconstructed in the rural area and 29 houses in the town centre (culture conservation). With the help of the reconstruction measures, a total of 1,763 victims of earthquakes could be accommodated in the rural area and 159 in urban locations. Applying a mixed calculation results in accommodation costs of 954 euros per person, including all accompanying measures, incidental expenses, and GTZ overheads.

The project continued the support initiated by emergency aid (supply of food and necessary consumer goods) and was complementarily extended by a TC reconstruction project that will last even longer (keywords: sequencing and sustainability).

Furthermore, self-help can be a major component of the rehabilitation and reconstruction of dwelling space. It can either take place within the "self-help models" described in these Guidelines incorporating the beneficiaries' participation as labour force in its narrow sense, or in the form of various personal contributions, even in the broader sense of "contractor models". Of importance in this respect are the craftsmanship and the target group's time capacities, which can be reduced due to the need to care for their families and secure their existence (agriculture and wage-earning). Criteria for deciding between contractor models and self-help models are described in chapter 5. Altogether, personal contributions arise from the participation in planning and implementation, monitoring, and several other services that are not directly and adequately remunerated. The measure itself and its success can be structurally effective as a contribution to the reconstruction or the development of the production capacities in the country: executing organisations, political decision-making bodies and, last but not least, the companies and people of the local construction industry make substantial contributions, even if local planners and construction companies, for example, are paid by donors' grants and take financial benefit from it. These earnings flow directly back into the trade cycle and foster the economic development of the concerned country.

2.3.3 Poverty reduction

Natural disasters such as earthquakes, floods, heavy storms and volcanic eruptions leading to the destruction of habitations in most cases affect the whole population of the disaster region. The poorer population groups, however, living in less solid housing, quite often on more susceptible land, are more severely harmed. In addition to that they seldom have the financial means necessary for the reconstruction of their housing. The objective is to counteract increasing poverty.

Thus, the concern of building measures must be to ensure the creation of dwelling space for the needy groups, whose own resources are insufficient for the reconstruction. It has to be taken into consideration that in many cases the needy groups are not in a position to offer a significant contribution in the form of manpower. The importance of a careful selection of the target groups was indicated under section 2.3.1, Significance. This can be determined by a reasonable choice of criteria of neediness, as for example the number of persons to be cared for per household, the number of household members that are able to work, the amount of household income, etc. The transparency of the selection process should be guaranteed by public announcement and the formation of the selection committee.

By selecting the model (see chapter 5), the involvement of the local enterprises or the national economy can be influenced, and consequently, this can have stimulating effects on the economy. Such impacts on the people's income in crisis regions are able to bridge poverty caused by the crisis, and by utilising the manpower of many - even unskilled - workers, they can have positive effects especially on the poorer population groups. Whereas the building of prefabricated houses mostly requires parts imported from abroad, most parts for the conventional local constructions can be obtained in the country. The questions of urgency and costs are, among others, the determinants for the choice of the construction method. Given the labour-law conditions, refugees or displaced persons (usually men) can apply as skilled or unskilled workers at the companies assigned with the provision of shelters. Opportunities arise especially in the case of large order volumes, when at least temporarily new employees are hired. A "cash for work" model in the field of self-help can also improve the households' economic power in addition to the self-help character. In all, the contribution and the allocation of the economic benefit to the individual groups should be assessed when selecting a model, in order to avoid an intensification of economic disparities.

2.3.4 Appropriateness

The appropriateness of the measures refers to socio-cultural factors, as well as to the construction standards, and the selection of material. Socio-cultural factors include the consideration of cultural, gender-specific, and religious characteristics, but also the accustomed form of housing estate, such as settlement with scattered buildings or agglomerations. The personal security of the beneficiaries has to be guaranteed and assessed on the basis of especially vulnerable groups (women, children, old people, minorities). Standards for spatial dimensions and equipment should in no case be higher than those of the resident population. It has to be distinguished between temporary shelter, guaranteeing a necessary minimum of hygiene, cooking facilities, and privacy and the final utilisation, possibly offering greater spatial dimensions. As far as possible, the designs should incorporate sufficient flexibility for the beneficiaries to be able to make changes within their dwelling spaces, add small extensions, and, for example, develop small vegetable gardens. In order to lay the foundations for an everyday life and the support of a productive coexistence, the construction of social buildings, such as kindergartens, schools, health care and community facilities, is indispensable. When rehabilitating existing living space, buildings of social infrastructure, such as schools and health care facilities, can also be rehabilitated or enlarged in order to be able to better cope with the new demands on the community. Appropriate planning and the involvement of the target groups' representatives considerably foster the ownership of the residents. Locally available resources should be considered in the use of construction material, in order to create regional economic effects as well as exemplary model solutions. Building measures are to be verified with regard to environmental concerns to avoid the over-exploitation of wood or other local resources. In the case of buildings that are to serve as models, an environmental impact assessment should be conducted to determine the risks of the future use of resources when spreading the technology.

2.3.5 Effects of conflicts

Due to the immense support of the target group, it is important to avoid or at least mitigate socio-economic disparities during the planning and implementation phase. Implementation models, which involve and support a significantly large number of different parties, either directly or indirectly, are more appropriate than those that only consider a specific target group of homeless people or the direct beneficiaries. In case employment and income opportunities arise for the whole population in the area, disparities and potential envy are limited.

Furthermore, the consideration of existing conflicts, especially in refugee programmes, has specific importance. In the light of conflicts that are still basically unresolved, the housing situation has an immense influence on the dynamics of the conflicts. Thoughts should be given as to how much physical distance is necessary to avoid further escalation as well as to possibilities of promoting a de-escalation, maybe even indirectly.

The employment of refugees can meet the local population's disapproval, lacking income possibilities themselves. To the disadvantage of the local population, the abundant supply of manpower can lead to a dumping of the wages typical for the area, particularly when refugees and displaced persons are already provided with their basic needs, such as food, free of charge. A limited operation of cash for work, however, can lead to a positive economic effect even with a shortage of formal work permits of the refugees. In the case of rehabilitation and reconstruction, the employment of formerly displaced persons and ex-combatants can have a stabilising effect on the conflict dynamics and help to contain everyday violence.

When rehabilitating and reconstructing, it is essential to clarify property questions before the construction measure, in order to limit, for example, potential disputes about utilisation, which tend to arise during the integration of formerly displaced persons. The infrastructure of the building measure should be adapted to the local standard. Additional infrastructure facilities for the host population can also be provided, if necessary. In order to promote reintegration, it is beneficial to plan integrated schools for the resident population, returnees, and possible new settlers, and to adapt the existing infrastructure accordingly. The forming of ghettos in the new settlements, which frequently have disintegrative consequences, should be avoided. Exchange and regulation forums, as well as groups for the joint observation of the effects, can also be created between representatives of the target groups, in the broader sense, and the beneficiaries of the dwelling space.

2.3.6 Reduction of vulnerability

Housing development after disasters is sustainable only if a reduction of the population's vulnerability to future disasters is achieved: within the framework of building measures basically by the correct choice of location and by disaster-oriented construction techniques.

Accordingly, building measures have to be assessed in terms of the extent to which the disaster risk can be reduced by the selection of the building site. A decision to establish new settlements on less risky terrain, however, entails the disadvantages that are commonly associated with new settlements. Besides deciding on the location, several technical details, some of which can be realised without significant additional expenses, can cut down the constructions' vulnerability to destruction by disasters. The planning criteria for simple buildings, mentioned in chapter 6, describe disaster-specific aspects. In addition to the realisation of planned building measures, the training of building enterprises, craftsmen and the population in the application of simple techniques for improved construction can be organised. Corresponding consultation of the responsible authorities can also contribute to an improvement of the strategies for disaster risk management. Provided the building measures are included in a package of measures of DEA, several possibilities arise to cross-link them with other precautionary measures.

2.3.7 Sustainability

The sustainability of building measures is assessed in terms of the objectives of satisfying the needs of the homeless and the quality of achieving those needs.

In general, sustainability is enhanced through the wide acceptance by all the parties involved and their integration in the project. In the event that the project executing organisation originates from the building sector, it is essential also to ensure the participation of the local authorities. Sustainability is also increased by the appropriate consideration of the needs of the interim and the end users. Building the dwellings for the end users represents the ideal prerequisite. In the case of refugee programmes, it is important to consider the final utilisation by the residential population in the host region after the return of the refugees.

Referring to the direct target group of beneficiaries, their elementary basic needs are satisfied and thus the conditions for development out of an emergency situation are improved. Already at an early stage, construction projects as well as back-up measures of DEA can provide organisational support the future beneficiaries. This facilitates personal contributions, neighbourly cooperation, and the functionality of the future administration. Back-up measures meeting requirements and follow-up assistance also serve to achieve improved sustainability. Customer satisfaction, however, can only be ascertained in retrospect. Since building measures after disasters and conflicts mostly do not include any promotion by executing organisations beyond the measure itself, structural effects on the institutions are generally not to be expected.

3. Methodological approach

The methodological procedure begins with

1. the donor/financing agency defining the intended support, thus

2. enabling an expert group of the NGC to perform a situation analysis and a rapid assessment, which, in accordance with the project executing organisation,

3. result in an offer by the NGC, incorporating a working or implementation proposal. After

4. the commissioning of the NGC by the financing agency

5. an implementation agreement has to be concluded between the NGC and the local project executing organisation, before

6. the implementation of the reconstruction measures can begin. Upon completion

7. the acceptance procedures, handing over and, if necessary, aftercare take place.

Documentation and knowledge management complement the measures with regard to the future evaluation of experiences.

3.1 Definition of the support of the donor or financing agency

The donor or financing agency verifies the eligibility for promotion of a supporting measure and defines his intended support. If necessary, he is advised by experts of the NGC. Normally he fixes a budget or a budget scope. The development-policy intentions of the donor, as well as matters that are deliberately excluded from support, have to be analysed. The same applies to the envisaged time frame. Rough notions of minimum and maximum standards should be compared. Questions concerning the possible desire for public appeal of the measures have to be clarified as early as possible. The donor/financing agency should check the contact addresses of institutions and persons, if any, that can provide support on location.

During the analysis and rapid assessment of the situation on location the individual appraiser, or the team, represents the interests of the potential donor/financing agency and follows any possible conditions it stipulates.

3.2 Analysis and rapid assessment

Questions regarding emergency aid are usually given priority in a rapid assessment. The second step for the building experts is to deal with questions of temporary shelter for disaster victims, refugees or displaced persons.

Within the framework of these Guidelines different solutions are described.

The question of the possible project type and the form of implementation already arises at the time of the situation analysis and the rapid assessment. It mainly depends on:

- the extent of damage and degree of destruction,
- the number of persons affected,
- the time frame in relation to the number of persons affected and the climate (winter/summer),
- the necessary/appropriate reconstruction technology,
- the availability of required human and material resources.

During the rapid assessment on location, the administrative structures of the project executing agency, if already nominated, must be investigated, as well as its expected performance capability. This decisively influences the conception of measures and the taking over of responsibility, as well as the possibilities of part financing of project components by the project executing agency.

The major steps of the needs analysis and rapid assessment are specified in the form of a checklist in section 4. There, the list mainly focuses on the building aspects of questions regarding the creation of emergency shelters or reconstruction.

3.3 Working and implementation proposal, offer

The NGC receives the commission on the basis of an offer incorporating an implementation proposal. The potential donor or financing agency should be informed of the situation by telephone immediately after completing the rapid assessment. It is advisable to send them the concept of a working or implementation proposal before elaborating the final offer in order to consider their comments and suggestions in the offer.

The offer itself should at least deal with the following aspects:

Brief summary of the project with short statements on problem analysis, project objective, planned results (achievements), target group, project executing organisation, cost figures, time schedule, assumptions and risks.

The terms of payment and special conditions of contract are to be agreed upon. The offer to the donor/financing agency should be made at the best possible cost estimates on the basis of the prime costs of the NGC. The imponderables in emergency aid and reconstruction measures are too great to be able to agree on a fixed price. If an upper limit is not to be exceeded under any circumstances, this upper limit can be agreed upon on the basis of a variable scope of works, which has to be adapted, if necessary, during project implementation, in agreement with the donor/financing agency. The same can be applied when sub-contracting construction works.

3.4 Commissioning

Depending on the financing agency the commissioning might go through a long administrative process. Nevertheless, in order to start the emergency measures on a secure basis as quickly as possible, it is recommended that a letter of intent is issued by the financing agency or, if commissioning is not yet possible due to formal reasons, a written confirmation to the NGC by the financing agency is necessary. This is advisable if, for example, an exchange of notes has to be executed beforehand. The statement should include an authorisation for commencing the measures, including the assurance that, in the unfavourable event of a project break-off, the expenses incurred up to that time will be reimbursed to the NGC. On such a basis the NGC will be in the position to invoice.

3.5 Implementation arrangement with the project executing agency or target groups

In cases of emergencies and disasters, administrations and political decision-making bodies in the affected countries are suddenly confronted with unexpected events. Total overburden, lack of experience and, as a result, inadequate coordination are the consequences. A great number of helpers come into the country from all around the world, in many cases even without experience, and want to start helping immediately.

It is essential to get acquainted with the potential local executing organisations or appointed political authorities and conclude written agreements with them, so that the affected administrations get an overview of the aid measures in the country. This is a minimum condition to achieve coordination, information, efficiency, an overview, a fair allocation of assistance and even more. An official, written agreement ensures legality and thus also a certain degree of protection of material and staff.

According to the political significance and the scope of the material aid measures, it may be desirable or necessary in bilateral aid measures to conclude a special exchange of notes. An exchange of notes constitutes the highest form of agreement between governments. The decision on that is taken at the ministerial level. The procedure is usually time-consuming. However, should there be a need for speedy implementation of the aid measures, there is the possibility of a pre-commissioning, as described under 3.4. The advantage of such an exchange of notes consists in the highest acceptance by all parties involved. Within its framework, exemption from import duty and taxes for material and personnel, competences and important partnership contributions can be regulated. It is common and time saving for emergency aid to use unilateral notes through the embassy, while exchange of notes within emergency aid projects is exceptional and makes sense only for very large projects.

Implementation agreements between the implementing organisation (here, for example, the NGC) and the local ministry in charge, having been appointed or especially created for emergency cases (e.g. Ministry of Construction, Ministry for Refugees), or downstream bodies, are common practice. In the case of bilateral aid, the German Embassy should be consulted when concluding the agreement. Essential contents of such an agreement could be, among others:

- nature and purpose of the aid measures,
- location of the measures,
- beneficiaries of the measures,
- specification of contributions to be made from both sides,
- amount of the financial contribution from the German side, or the donor/financing agency and, if so agreed, of the project executing organisation,
- tax exemptions for seconded experts,
- exemption from import duties on material and other taxes.

For regionally branched measures, in which the partner institutions delegate the responsibilities to provinces and communities, further implementation agreements with similar contents also have to be concluded with them, however, only with reference to the region in question.

3.6 Taking over, handing over, aftercare

The taking over and handing over procedures fulfil different functions in “contractor models” (section 5.1) and “self-help models” (section 5.2). While the procedures involving acceptance certificate, guarantee period, guarantee retention, etc., common in the construction industry worldwide, apply to “contractor models”, mostly followed by a media coverage and publicly appealing ceremonies of handing over to the partners or project executing agencies, the taking over and handing over in the case of self-help measures takes place successively after completion.

Newly established housing areas and buildings reconstructed to accommodate disaster victims require aftercare services. Already after the commencement of construction, questions concerning administration and management during the utilisation phase are to be discussed with the project executing organisation and personnel is to be recruited early. In the final stage and with the handing-over of buildings and installations, the latter is introduced to the technology of installations, such as electricity, gas, water, and sewage, and is put in charge of operation, maintenance, and guarantee claims after occupation of the buildings.

It is necessary to establish the technical means to be able to gradually recover the rental and operating costs from the beneficiaries by installing electricity, gas, and water meters during construction.

3.7. Documentation and evaluation

In the case of emergency aid measures, implemented in a relatively short period of time and under difficult and often chaotic conditions, documentation often comes off badly. However, it is exactly the experiences from such projects that are important to document, and thus make information quickly retrievable in a similar situation later on. Problems, that inevitably arise during such projects, can be better analysed the more information is available. Helpers in emergency situations are not always experienced experts, but very often dedicated people, who are confronted with such situations for the first time and depend on information from earlier relief operations. Documentation is also indispensable in view of knowledge management.

Although each disaster and emergency situation signifies extreme pain for each individual victim, press reports are often a lot more dramatic than the real situation, i.e. with regard to the scope of damage and the number of victims. When visiting the hardest hit places a photo documentation should be carried out, especially before the clearing up works. All further information from the investigations stated under section 3.2 “Analysis and rapid assessment” should be documented in written form. The planning process and important decisions should also be recorded.

Detailed stock-taking of the buildings and the situation on the spot constitute an important condition to match planning and demand. The planning is generally not done on the spot, so that not only written accounts but especially photos are indispensable. Before starting with actual rehabilitation measures, photos of the destroyed buildings should by no means be forgotten, in order to permit a comparison with the situation after their rehabilitation (before/after documentation).

Since many individual services and supplies by different partners are required for the progress of construction during implementation, a chronological documentation of the course of construction (time schedule) is imperative for the monitoring of the project. All decisions taken, especially the awarding of contracts, should be documented according to the existing conditions.

It goes without saying that all planning documents have to be kept for a period of approximately 15 years in the form of paper copies as well as on electronic media. Since plans are amended or modified according to the given circumstances during the implementation phase, “as-built plans” have to be prepared by the architects.

Aid funds are generally also tax money and are thus subject to certain usage guidelines which have to be observed strictly. Therefore, it is compulsory to document in detail the awarding of construction commissions, the contracts, and the costs, in order to be able to verify their correctness later. Further information can be found under 5.1.4 “Contracts and awarding procedures”.

With the help of today’s technical means it is easy to document all important phases of an aid project photographically. This is important to show situations before and afterwards, but also to document the gradual development during implementation, unforeseen events, and building components that will be concealed later on. These photos can be easily transmitted electronically, enabling experts in their home office, for instance, to participate in the solution of problems without having to undertake costly and time-consuming travels.

When filing the photos it is important to note the name of the place and the date on the file or on the back of the photographic prints. These details are especially helpful when producing information brochures, which should be a must for all important projects.

4. Needs analysis and rapid assessment on location

The following points of consideration and suggestions for the situation analysis and rapid assessment are restricted to investigations in the field of construction and technical infrastructure. In the concrete examples of the project planning and management, described in chapter 5, a series of further points relevant to the projects are cited, which, without claiming to be exhaustive, are to be observed as well. In retrospect, references are again made to the remarks under section 3.2 (Analysis and rapid assessment).

4.1 Before departure

Here again, reference is made to the remarks under section 3.1 (Definition of the support of the donor or financing agency). Additionally the following aspects should be considered:

Defining of commission:

- Clarifying the expected budget and possible modalities of the donor/financing agency;
- approaching the donor/financing agency about possible special instructions or reservations towards institutions/persons;
- agreeing with donor/financing agency on whether minutes of meeting can be signed, for example, by the project executing organisation;
- clarifying specifications/intentions concerning contents, target groups;
- ascertaining former and future cooperation in the partner country, as well as cross-connections, and aftercare.

Logistics:

- Ascertaining contact addresses on location (embassy, aid organisations, hotels, companies, planners/architects/engineers);
- considering relevant press information from the Internet or other sources and, if necessary, situation reports of leading organisations (UNHCR, International Red Cross) and others;
- clarifying communication links (e-mail, telephone, fax) with the relevant persons of the home office;
- deciding on interpreter; mobility in the country; international driver’s licence;
- visa issues; valid passport; vaccination card; vaccinations; first-aid kit;
- personal financial provision;
- possibly taking out insurances.

4.2 Methodological recommendations for investigations on location

Collecting information:

- Procuring basic information, situation reports, etc. of leading organisations (UNHCR, International Red Cross), also on location, if available;

- investigating estimated numbers of refugees and persons rendered homeless, including indication of the sources;

- conducting conversations with relevant government representatives and, in particular, with the executing organisations of the aid measures;

- enabling information exchange with GOs or NGOs and e.g. UNHCR, that are present on location, thus providing an overview and possibly avoiding duplication of work;

- enquiring of the affected government about existing or planned aid programmes and responsibilities;

- enquiring about the government's budget scope, if possible;

- investigating aid measures of other donors in the building sector;

- substantiating and assessing information received by repeated enquiries of other parties involved;

- conducting general discussions about information and coordination with the German Embassy at the beginning of the investigations.

Project executing organisation:

- Clarifying core problems and aims, as well as priorities and persons in charge, as far as possible, in agreement with the project executing organisation;

- evaluating administration, potential performance capability of the project executing organisation, and other relevant government authorities concerned (building and planning authorities).

Participation and participants:

- Including the affected population in the investigations is desirable, but problematic. It makes sense when the people affected are represented by persons recognized and also accepted by the project executing organisation. Should this not be the case, the rapid assessment will have to be done without the inclusion of the victims. This will have to be made up for, if possible, at a later date, for example when planning and stipulating the standards of the building measures. It is not only the refugees and disaster victims that are affected, but also the local population, which is, for example, represented by a mayor.

- Investigating self-help potential, skills, initiatives of the affected population, the refugees, and the disaster victims.

Procedures and security:

- Assessing security risks (physical, economical, commercial) and clarifying logistic issues (transport possibilities);

- verifying possible cooperation opportunities with national military or foreign peace-keeping forces (formation of convoys for personal and material transports, escort, transport of relief supply, material transports);

• assessing general military presence.

4.3 Analysis of the local building industry

The investigations on location concerning building issues are conducted from the point of view of a non-commercial general contractor (NGC) or implementing consultant. The cooperation with the local building industry plays a decisive role. Should this fail to succeed, the aid measures will run the risk of being planned and carried out without sufficient adaptation to local possibilities and requirements and will thus be treated as third-party interests and alien, and persist as such. The costs will definitely rise with imported know-how, i.e. the recipient country will benefit less from the aid. The identification of appropriate companies to implement the measures on behalf of the NGC is of vital importance. The following investigation steps are recommended:

Information on the building sector in the partner country:

- Gaining access to professional chambers or associations of architects and engineers (if existing) via the project executing organisation, in order to obtain information (directories of members, addresses) and references to local partners;

- conducting the same queries at the ministry of construction or the local building authorities;

- enquiring at the ministry of construction about lists of local construction companies, if possible, itemised according to qualification and sub-divided into categories.

Assessment of local construction companies and planners:

- Compiling “short-lists” based on aforementioned information sources (chambers, associations, ministry of construction) for first interviews and with a view to future planning and construction tenders;

- conducting as many interviews as possible with the companies’ executive management to get an overview about its qualification and about the local building situation in the country;

- questioning the architects/engineers about the construction companies and vice versa, the construction companies about the architects/engineers;

- enquiring about references of architects’ and engineers’ offices and, if there is enough time, looking at projects and/or questioning former clients;

- conducting interviews with planners and construction companies in the companies’ offices, on the companies’ premises, if the time permits, in order to get an impression of the equipment and the “vitality” of the company.

Ensuring an appropriate procedure:

- Conducting similar enquiries with planners, building authorities, ministry of construction, and construction companies about the level of construction costs (price per m^2, price per m^3 for normal housing construction) and comparing them carefully;

- discussing the envisaged application of sample building contracts, in order to be able to analyse the general, and especially the international experience of the planners and construction companies in dealing with contracts;

- discussing the country’s common fee and remuneration practices with planners;

• questioning planners and construction companies on liability and guarantee issues;

• questioning planners and construction companies about the wage situation of architects and engineers, work potentials, material and production sources, and especially the bottlenecks;

• soliciting, if necessary in advance, relatively non-binding offers or partial offers for certain standard services for further consideration.

Logistics:

• Enquiring at construction companies and the ministry of construction about the transport situation in the country, i.e. capacities, transport costs per ton, costs per km, etc., prices for petrol and diesel fuel, situation of construction material and fuel supplies in general, and comparing the information with one another;

• enquiring at companies, project executing organisations and the ministry of construction about import procedures, import problems and time requirements; in doing so, questioning the situation of duty exemption for goods to be imported within the framework of aid measures (e.g. pre-fabricated houses, installation material);

• discussing the situation of the banks and questions concerning money transfer directly with the project executing organisations, companies, and banks.

4.4 Questions on infrastructure (land use planning and connections, energy, water supply)

Land use planning and connections: (see also sections 5.1.5.3 (1) and (2))

• Suitability of land in respect of reduction of vulnerability to disasters (see section 4.5)?

• Have surveys of land (cadastral maps) been carried out or who is in charge of them?

• Distance of site (for settlements) from borders, from war zones (recommended distance: minimum 50 km)?

• Road connections and public transportation?

• Connections to public institutions (schools, health care facilities, community facilities)?

• Which regional plans have to be considered?

• How can the maintenance of buildings and infrastructure be organised?

• Has storm water drainage been considered?

• Waste disposal - who carries the costs?

Energy supply: (see also section 5.1.5.3 (3))

• Which fuels are usually used in the country (gas, coal, electricity, wood)? What costs?

• What are the fuels used for (heating, cooking, lighting)?

• Availability (imported)?

• Site development costs, energy supply (distance)?

• Who takes care of the supply (project executing organisation, partial cost sharing)?

• What are the prevailing cooking practices?

• Size of household per kitchen stove? Kitchen stove with how many hot plates?

• How will the new dwellings be heated (fuel, types of heaters)?

• Potentials of existing energy supply companies?

• What is the environmental impact of resource usage (especially for local energy sources, such as wood and charcoal, as well as building timber or building materials)?

• Is it necessary to rehabilitate or expand the energy supply company, for instance, in order to supply a new settlement?

Water supply: (see also section 5.1.5.3. (2))

• Demand for drinking water, domestic water (differentiation is often unknown); the amount is more important than the quality of the water (e.g. 40 litres in Eastern Europe per day per person, or 25 litres in Africa per day per person, incl. herds of small domestic animals)?

• Quality of water, is filtering equipment required?

• Water storage (underground reservoirs, cisterns, overhead tanks)?

• Supply by tanker during the start-up phase? Who carries the costs?

• Cost per m^3 of drinking water (provided it can be determined)?

4.5 Target group, risk of conflicts and disaster risk management

Target group and risk of conflicts:

• Rough assessment of the socio-economic structure of the region's population as a whole and in relation to those in need of shelter;

• differentiation of those in need of shelter according to socio-economic criteria and, if necessary, collaboration in the formulation of criteria for the eligibility for acquiring dwelling space or promotion;

• review of the advantages and disadvantages arising for the resident population by the building of new settlements;

• assessment of what kind of cooperation and conflict potentials exist between the resident population or total population having dwelling space and the target group to be provided with shelter, in connection with the building measures;

• homogeneity of the target group to be provided with dwelling space (groups, structure of households, organisation, also regarding vulnerability to disasters);

• assessing the capacities of the target group and taking into consideration when planning; verifying collaboration

- during planning (organisation and representation),

- during realisation (finances, technical know-how, working performances),

- compatibility of participation through work inputs, which generally help to secure the people's existence.

Disaster risk management:

• Inquiring or drafting disaster risk assessment for the land to be built on or which is to be rebuilt; assessing the risk of hazards in cooperation with the population and national institutions (risk of flooding, landslides, lava stream, other exposures);

• inquiring which possibilities exist within the conception of building measures to reduce the risk of disasters:

- disaster-resistant construction for new buildings, repair works, and reconstructions,

- cost benefit considerations,

- applicability of the conception beyond the building measure,

- discussing possible use of early warning systems for earthquakes, floods, volcanic eruptions (e.g. with flood early warning system for the efficient operation of disaster protection measures),

- disaster precaution (e.g. education and training of local organisations, reserve supplies of sufficient disaster-resistant infrastructure, such as emergency shelter for future use).

4.6 Interim result on location

In the course of the assessments on location and after consulting the project executing organisation the NGC's appraiser forms his first ideas on how the envisaged project concept is to be realised. Here, any one of the implementation models described in section 5.1 to 5.3 or appropriate combinations of these can be applied. Not later than at this point the appraiser should contact the people responsible in his home office and discuss the latest developments, the proposed project concept, and further procedures. The home office might have to consult the donor/financing agency.

Subsequently, the appraiser should agree with the project executing organisation on the probable conception and convey the results of the agreements with the financing agency and home office. The results should be recorded as minutes of meeting or notes of discussion, provided that no other procedure was agreed upon with the donor/financing agency. At this point the German Embassy should be consulted with regard to a possible involvement.

Provided there is enough time, a draft offer or part of it should already be written on location during the mission.

4.7 Analysis of the German and international building sectors with regard to emergency shelter

A large number of planners and project developers worldwide are dealing with the planning and conception of emergency shelters. This is taking place within the field of research and education with students at universities, in private architectural firms, or in medium-scale enterprises, where these concepts are manifested in prototypes and model houses. In some cases, these ideas are developed in cooperation with large companies wanting to sell material (e.g. insulated profiled metal sheets) or with manufacturers of prefabricated houses. Well-engineered model shelters for emergency situations hardly exist. This is understandable as developments cost money, the market is unclear, and opportunities for new commissions only occur coincidentally. But there are programmes for the construction of simple buildings for the leisure market (garden houses, log cabins), which are in permanent demand by customers. Manufacturers of prefabricated houses react to inquiries if projects and secure financing are assured. Then, they generally mobilise their subcontractors, for example in Scandinavian countries, companies in the USA, in Eastern Europe, or in low-wage countries, and launch offers. The implementation proposals then follow the NGC's instructions (see section 5.1.5.3 (4)), or they offer their own, relatively simple and adapted products.

Bringing in the German or international building industry is a viable option only if a large number of prefabricated emergency shelters is to be erected. In all other cases of building and rehabilitation measures involving conventional construction, German or international building companies hardly stand a chance on location, due to the costs involved.

In the case of prefabricated buildings, the NGC should insist on turnkey erection on site, including foundation. It is not of much use if the manufacturer is only in the position to supply ex-works or free on construction site and leaves the interface coordination and completion of the service to the NGC. The NGC will then inevitably be confronted with problems. An interface on the foundation's upper edge is basically possible, if the manufacturer of the prefabricated houses is assigned the responsibility for the approval of the foundations erected by a third party. A supply always has to include the assembly of the buildings on site.

As a result of his business experience and connections, the NGC either already disposes of an index of potential manufacturers of prefabricated buildings or he can request the associations of manufacturers of prefabricated houses (also to be found in the Internet) to provide him with a directory of members and further information. Fundamental selection criteria for manufacturers of prefabricated houses are, among others:

- The product proposal is adequate and the offer is complete (including sanitary facilities, heaters, furnishing, etc.);
- proven expert know-how in previous comparable projects (references) exists;
- existing production capacities are sufficient and thus anticipated delivery time can be met;
- turnkey supply is possible;
- international experience in transport, supply, and assembly is evident;
- qualified personnel is available;
- commercial creditworthiness seems to be given, but has to be verified.

Aforementioned technical and commercial selection criteria are to be seen in relation to the price. The relation has to be weighed up and determined according to the situation. A good product that is reasonably priced, but cannot be delivered in the required time, is less likely to be of use to solve the emergency situation on location (see case study B - Azerbaijan).

Case study **B**

Construction of 16 refugee settlements as emergency aid measure in Azerbaijan

Financing agency:	**ECHO (European Community Humanitarian Office)**
Financing volume:	**16,600,000 euros**
Period:	**1993-1996**

After the breaking up of the Soviet Union, hostilities between the now independent states of Azerbaijan and Armenia escalated and reached their peak with the Armenian army's occupation of Nagorny-Karbakh, a region in Azerbaijan mainly inhabited by Armenians. Approximately 1.4 million people, mainly Azeries, as Azerbaijan's citizens are called, fled into the hinterland of Azerbaijan.

A large number of displaced persons had no shelter or food and the new state Azerbaijan was not able to solve the pending problems. ECHO decided on rapid aid and assigned GTZ with the building of simple housing settlements in different regions.

From 1993 until 1996, GTZ built a total of 16 housing settlements with 3,280 houses and 6,560 rooms for approximately 36,000 persons in 4 different building phases. The average construction costs per accommodated person amounted to 558 euros, including all incidental expenses and GTZ overheads, a relatively low price, considering the circumstances and regarding the efficient and appropriate solution reached.

The project implementation of the first building phase, executed in 1993, took place in cooperation with the German Federal Agency for Technical Relief (THW), which established the technical infrastructure (roads with gravel surface, water supply, and street lighting) for the first two settlements. GTZ was responsible for the turnkey erection of all the houses during all 4 building phases. For the building phases 2 to 4 during the years 1994-96, the technical infrastructure was also established by GTZ.

The housing units were simple constructions made of insulated, prefabricated lightweight building elements that could be assembled manually. The housing units were equipped with one lighting connection each and very simple basic furniture. After tendering, the prefabricated buildings were imported from Finland and Turkey. Ventilated pit latrines were built on site and assigned to each housing unit. Centrally located washing and shower houses in conventional construction satisfied the minimum hygienic needs.

The identification phases of the individual locations of the settlements with regard to technical and socio-ecological criteria, took place parallel to the planning and tendering activities and each lasted about 1 month. The building of the technical infrastructure, as well as supply and erecting of the prefabricated houses was achieved with greatest effort in approx. 4 months. Due to the very flexible methodology, it was possible to hand over each of the housing settlements before the onset of winter.

Parallel to the construction work and during the whole construction period, the so-called integration phases with instructions and directions on self-help initiatives, taking-over of personal responsibility, development of the community, and creation of jobs were realised in cooperation with an Azerbaijani NGO.

In building the housing units, the refugees were provided with a first solid nucleus to spend the winter in, with the possibility of an individual expansion through personal contributions later on.

Extreme efforts towards the integration and sustainable development are yet to be made.

5. Project planning and management during implementation

In the course of the rapid assessment the envisaged concept, expected to be suggested, generally becomes apparent to the team of appraisers. This means that concept-specific investigations for the beginning of the planning and first considerations about the implementation of this concept should already be carried out parallel to the rapid assessment.

In this chapter, “contractor models”, “self-help models” and the “building yard model” and their contents and procedures will be presented by examples. Modifications, variations, and combinations are possible. In contrast to the contractor models, where the construction works are carried out by the private industry, in self-help models a considerable part of the construction works is implemented by the future beneficiaries themselves. In this case, support is mostly given through building material supplies and expert advice in construction. Here, the target group is involved more intensively in the planning and implementation of building works, while building contractors are awarded contracts at the most for partial works. Independent of that, in both models a participation of all people concerned (direct target group, population in the target region, administration and authorities) takes place in the planning. All these direct or indirect participants contribute personal inputs in favour of the project’s overall success.

The decision on whether a contractor model or a self-help model is to be applied depends basically on the following aspects:

- Building method in the target region and technical complexity of the building project,
- capacities of the parties involved (technical, economical, organisational),
- conceptions of the time frame for achieving the objectives.

In societies marked by the division of labour, contractor models are the prevailing model of implementation of building measures. Technical advice can be given to the construction industry, e.g. concerning the improvement of building techniques with regard to disaster precautions. Even if contractor models include an external financing of the measure by the donor, sector authorities and administrations provide their own inputs.

If living space is generally provided by self-construction in the region and the basic technique is widely known to the target group, the target group should be included in the construction works within the framework of self-help models, according to their technical know-how. It has to be taken into consideration that the scope of the building works on houses requires a long-term commitment of the workforce, which is not always possible (see 5.2. Self-help models).

5.1 Contractor models

Provided that the expert analysis of construction and the rapid assessment come to the conclusion that, due to great destructions of buildings and technical infrastructure and due to an acute lack of accommodation possibilities for many thousands of disaster victims or refugees, building measures need to be implemented in the shortest possible time - maybe before the onset of winter - implementation according to the “contractor models”, as described in detail below, is the appropriate option. This entails a consistent cooperation with the local building industry, in exceptions even with the international building industry. It is not acceptable that in large aid projects the agency responsible for the implementation of the project (NGC) plans the project on its own, recruits personnel, purchases material, and more or less plays the role of the building contractor. It is a fallacy to believe that by doing so expenses are cut down on (by saving contractors’ profits, purchasing material at lower rates, and the like), not to forget lacking guarantees and liabilities. Consequently the advice is: consistent cooperation with planners, building companies and suppliers, after their selection on the basis of competitions.

5.1.1 Local and international building industry

For various reasons, media reports on disasters, streams of refugees, and destructions are often exaggerated. Occasionally, international companies gain the impression that almost everything is destroyed and the affected countries are technically not able to solve the problems on their own. Frequently the opposite is the case, except, for instance, when power stations, dams and other plants with special technologies are damaged. Most of the damages, or at least a considerable proportion, can be repaired by the local building industry. Their participation fosters an economic development of the country from the beginning and creates jobs.

Albeit companies only exist fragmentarily in the host country, the required manpower and professional know-how are still there; they normally reorganise themselves quickly and do an acceptable job. The professional qualification of the potential local planning and building partners' executives is decisive. In order to discover these qualifications, detailed interviews have to be held before deciding on a shortlist and awarding of contract. In most cases, and if necessary, with the help of consultations, these companies ought to be considered for the implementation of services or at least for parts of it. The questionnaire (Questionnaire for Architects/Engineers and Contractors), included under item 9.1, can be used as a basis for interviews and making decisions.

Services, which the local building contractor cannot provide, should be covered by appointed sub-contractors (if necessary, international ones) or other independent contractors. Here, a coordination of the interfaces by the NGC is required.

5.1.2 Project controller, implementing consultant, local architects

The NGC, defined in section 1 (Summary) as the responsible agency for the implementation, owes the donor/financing agency the offered service as a whole. In this capacity it has to take the part of the project controller. It is best if the service of project control can be implemented with its own technical and commercial personnel, having experience in development cooperation and being able to make quick decisions. This reduces interactions with other parties, expenses and duration of the project.

Should the NGC not be able to provide these services, they can be subcontracted to a so-called implementation consultant from the German or international market. In case of delegation to an implementation consultant, the NGC still requires at least one expert (a building generalist) within the agency, in order to give instructions to the implementation consultant, to control him/her and to influence or take the necessary decisions. Rough sample TOR for engaging a project controller are outlined in section 5.1.3. Depending on the country in which the services are to be rendered, the implementation consultant may also be found on location.

At any rate, architects and engineers on location should be appointed as partners and subcontractors to carry out the planning and site supervision. They know best about the professional means and building permission procedures, the sources of material supply, the labour resources, and the industrial resources in general. They are familiar with the area and still remain on location after the completion of the NGC's or the project executing agency's measures and can, for example, follow up warranty claims on behalf of the NGC or the project executing agency.

5.1.3 Terms of Reference (TOR) for project control

5.1.3.1 NGC as project controller

Should the NGC dispose of experts within the home office staff and possibly also field staff, the following services should be provided to ensure efficient project organisation and implementation:

(1) Recruiting of personnel, or provision of:

- Project manager (seconded to project location);
- architect(s), construction experts (seconded to project location);
- 1 (building) economist (seconded to project location);
- backstopping - management = project leader (at the home office);
- backstopping - construction expert (at the home office);
- backstopping - contract expert (at the home office);
- backstopping - economist (at the home office).

(2) Project organisation and mobilisation on location

- Renting office space;

- employing local personnel (after interviewing) as: office assistant, interpreter, chauffeur, possibly other professionals;

- equipping offices; computer to be procured on location, if possible, for service and guarantee reasons, otherwise imported;

- installing telephone, fax, possibly e-mail and internet access; possibly satellite telephone;

- importing vehicles; alternatively buying on location or leasing them, after comparing prices;

- opening an account with a bank, if possible, for financial transfer and payment of invoices on location (short periods for payment);

(3) Project activities

Planning and preparation:

- Determining possible planning and implementation concepts with the project executing organisation (see also section 5.1.5);

- concluding necessary project agreement(s) with the project executing organisation(s);

- appointing local free-lance architects/engineers as subcontractors, after interviewing them and inspecting the architects' offices (possibly upon recommendation of the local Chamber of Architects or Engineers, if existing, or of the building authorities, or according to one's own knowledge and research).

Tender and contracts:

- Tender and conclusion of contracts with architects after consultation with the project management at the home office of the NGC (at GTZ, also with the contracts department), directly between NGC and architects;

- pre-qualification and shortlist of potential construction companies (with explanatory statement); verification of construction companies with a view to their qualification as general contractor;

- implementation of the construction tender and analysis; communicating proposal for award of contract (with explanatory statement) to the project leader at the NGC's home office (at GTZ, also to the contracts department for approval);

- direct conclusion of contract between NGC and general contractor for constructions.

Monitoring and controlling:

- Steering the planning of the construction works, carried out by the local architect;
- overall supervision of building progress;
- verification of the plausibility of the contractor's running invoices and the final invoice(s), which have been checked by the local architects;
- remittance of payments, after deducting contractually agreed retention money;
- controlling of project accounts, i.e. administration and financial management;
- dealing with and monitoring agreements with local contractors and local staff (contract procedures, payment etc.);
- acceptance, verification, and confirmation of bank guaranties (the reliability of the bank also has to be checked; it should be connected to the SWIFT transfer system);
- effecting all bank and cash transactions;
- management of overhead and administration costs;
- disbursement of financial resources (salaries of local staff?);
- bank transactions;
- accounts management;
- insurance coverage of the measures (transport, building etc.);
- budget planning (building costs) und monitoring;
- compiling regular financial and expenditure reports;
- invoicing of all measures;
- final commercial invoicing of the project and transmitting it to the NGC's project management.

Inspection/project termination:

- Inspection of the construction works by the NGC or delegation of the task to local architects;
- if necessary, handing over of planning and contract documents to the project executing organisation for the following up of warranty claims. Note: This procedure has to be agreed upon in the building contract;
- drawing up the final project report and possibly a photo documentation according to the instructions of the NGC's project management.

5.1.3.2 Implementation consultant as project controller

In case the NGC does not dispose of the required expert personnel to implement the project control, it can appoint a so-called implementation consultant to take over this task. The latter can originate from the following professional groups: architects, civil engineers, project controllers or infrastructural planners. Essential selection criteria are:

• Experience in project control and management;

• international experience;

• experience in contract procedures in the building sector;

• experience in cooperating with local sub-planners, site supervisors, and construction companies;

• experience in international development cooperation;

• sufficient personnel capacities for secondment to the project (possibly with substitute staff) and for technical and commercial backstopping.

In general the NGC has to look for an implementation consultant via a so-called consulting tender. The TOR for this tender can be derived from the services listed above, under section 5.1.3.1. Such a tender is time-consuming, which is a considerable disadvantage in view of the required immediate action in the disaster region. Direct appointment of consultants is generally possible with large commission volumes, however they require a clear rationale. Depending on the commission volume, it has to be verified whether it is also necessary to observe EU guidelines for the awarding of contracts, which would additionally prolong the procedure.

The description of services of the implementation consultant is almost identical to the services mentioned under the above section 5.1.3.1, for the case of the NGC taking over the project control. However, the terms of cooperation with the local architectural and engineering firms may differ. In any case, the implementation consultant will raise extra charges on the local firms' services, since he assumes responsibility for their services vis-a-vis the NGC.

5.1.4 Contracts and awarding procedures

Contract drafting procedure

Procuring of company information, company visits, interviews (QUARENG)

Initial meeting to draft shortlist and tender documents

Dispatch of tender documents (e.g. INVTD150 or INVTDFID)

Drafting of tenders by construction companies (e.g. TENDRFID)

Possibly public opening of tender
(see "Minutes of opening tender" - MOPTENDR)

Tender analysis
(calculation and technical appraisal by the architect)

Proposal for awarding of contract, and documentation

Decision on awarding of contract

Contract negotiation,
if necessary, corrections of bill of quantities (BoQ)
and completion of contract and planning documents

Mobilisation/preparation and commencement of project

Even if time pressure is high in crisis situations, the required procedures (however, with considerably shorter deadlines) hardly differ from those under normal conditions. Therefore, wherever possible and reasonable, awards should be effected on the basis of tenders. Controls and the transparent use of funds, as well as suitability for appraisal through respective auditing authorities, are too important to dispense with tenders.

In general, it is unqualified to reason that, due to the urgency of emergency aid building measures, contracts should be awarded directly. In all cases, specifications and bills of quantities will have to be drawn up before the awarding procedure. Without these, commissions have no basis and cannot be placed. The additional work or delay in time is only incurred due to the search for alternative tenderers and the need to analyse several tenders instead of just one. This takes up little extra time. However, obvious advantages lie in the proven economic efficiency and security to have engaged the most favourably priced (not necessarily the cheapest) tenderer. Negotiations can be conducted more efficiently if alternative offers exist.

The following sample documents of GTZ in connection with tenders and awards are included in the annex of these Guidelines:

9.1 Questionnaire for Architects/Engineers and Contractors (QUARCENG)

9.2 Bidding Conditions for Consultants, Architects (BIARCENG)

9.3 Contract for Architectural Consulting Services (CONTRARC)

9.4 Form of Cost Estimate (COSTESTM) and Explanatory Report (EXPLAREP)

9.5 Form of Invitation to Tender for Construction works (recommended for contracts value up to 150.000 Euro) (INVTD150)

9.6 Form of Invitation to Tender for contract value above 150.000 Euro (INVTDFID)

9.7 Tender Conditions for Contractors (TENDRCON)

9.8 Tender Form for contracts above 150.000 Euro (TENDRFID)

9.9 Minutes of Opening of Tenders (MOPTENDR)

9.10 Contract for Construction Works on Measurement Basis (recommended for contract value up to 150.000 Euro) (CONCTRMB)

9.11 Specimen of Performance Guarantee (GARANTPF); Advance Payment Guarantee (GARANTAP); Guarantee for Defects Liability Period (GARANTDL)

9.12 Specimen of Construction Progress Report (PROGREP)

9.13 Form of Certificate of Taking-Over (TAKGOVER)

9.14 Form of Certificate of Handing-Over (HNDGOVER)

9.15 FIDIC-Part I, Conditions of Contract for Works of Civil Engineering Construction (recommended for contract value above 150.000 Euro) (FIDIC-P1) Website Information.

9.16 FIDIC-Part II, Conditions of Particular Application (as an example), drafted by the GTZ (FIDIC-P2), to be adapted to the specific project conditions;

The annexes mentioned above are also available in French and partly in Spanish in the building section of GTZ and the GTZ contract department. The sample documents are drafts based on special requirements, conditions and conceptions of GTZ. With every new project they have to be verified with regard to their suitability, negotiated accordingly and adapted.

Large building contracts (commission volume exceeding 150, 000 Euro) should not be concluded without the support of a contract expert.

For all GTZ projects exceeding this volume the GTZ contract department has to be involved, as stipulated in the GTZ (internal) Orientations and Rules (O + R).

The contract forms mentioned above are based on common international forms and have been successfully applied by the legal and contract departments as well as the building section of GTZ for many years. It may seem that some of the documents are too detailed and thus inappropriate for application in developing countries. However, practical experience has shown, that contractors have so far not objected to the application of these updated contracts, and lawyers of the local companies have appreciated and accepted them due to their balanced content. International donors, the EU, and KfW, also insist on the application of FIDIC contract forms. They constitute internationally recognized contract conditions and guidelines for the implementation of building measures worldwide. They are published by the “Fédération Internationale des Ingénieurs-Conseils (FIDIC)” in two parts. Part 1 includes the general conditions, while part 2 refers to project-specific guidelines and thus has to be adapted to the special conditions of the respective project. Further information as well as order forms can be found on the Internet under “www.fidic.net”.

The application of the German fee scale for architects and civil engineers (HOAI), even with adaptations, is unsuitable. It is specific to Germany, too complicated, inappropriate for developing and emerging countries, and also unknown to them. Regarding building tenders, the same applies to the application of or reference to the German contract procedures for building works (VOB), when specifying construction works. The VOB is tailored to the German construction market, to high standards and agreements with German companies, and thus unsuitable - even more so for emergency measures. The remuneration as a percentage of the production costs is a possible and widespread way of paying for the services of architects and civil engineers. Depending on the job description, the rates can vary from 5 to 12%. The architects’ and engineers’ services have to be precisely defined before contracting them. The sample contract “Contract for Architectural Consulting Services” (CONTRARC, item 9.3), can be applied. It has to be adapted accordingly. Architects should only be contracted after having obtained several tenders and having conducted negotiations. In the case of easily comprehensible planning tasks, an effort should be made, together with the architects and engineers, instead of remuneration as a percentage of the production costs, to agree on a lump sum (fixed price), which can only be changed in the case of substantial variation of services.

As far as possible, construction works should be awarded to general contractors on location, in order to minimise interactions across borders. Separate tenders for different categories of construction work, as are common in Germany, should be avoided; otherwise all coordination services are left to the project controller.

Building contracts should be agreed on as measurement contracts, and not as lump sum contracts, because unforeseen events are common with emergency and reconstruction measures and a measurement contract reflects the situation, fair to both sides, as payment is effected according to the actual services delivered (exact number of pieces, quantities, sizes, etc.).

After completion of the building measures, warranty claims towards the NGC’s planners and construction companies are passed on to the project executing organisation, as the NGC usually retreats from the region while the warranty period persists. This has to be agreed in the contract.

5.1.5 Planning and implementation concepts

It is assumed that the intended implementation concept had already been determined roughly during the rapid assessment, in cooperation with the project executing organisation. It was included in the offer to the financing agency and forms the basis of its commission. Three possible concepts are presented as examples, which can be applied in combination and thus provide the project executing organisation with some degree of flexibility.

5.1.5.1 Rehabilitation and rededication of public buildings

Unused and vacant public buildings are often suitable for the short-term accommodation of disaster victims and refugees, after being rehabilitated or reconstructed accordingly and equipped with adequate toilets, washing places and heating facilities. These can be former military barracks, administration buildings or similar buildings. In general, the local authorities quickly have a good overview of the situation. It should, however, be made sure that such buildings are located sufficiently close to neighbouring settlements (social contacts) and are not exposed to environmental pollution. The advantage of public buildings lies in the fact that the question of ownership and thus the right of use is generally clear, the buildings usually are or were connected to technical infrastructure (water, sewage, electricity) and thus dwelling space can be provided very quickly, sometimes with little effort. In the early stages of planning, together with the project executing organisation, thoughts should be given to possible future usage, which should be reflected in the floor plans, provided that they are justified and the extra costs are not too high. The buildings can possibly be used later as administration buildings, schools, kindergartens, small trade, tenements and the like. This kind of accommodation is preferred due to its higher sustainability and the distribution of benefit to everyone.

At the beginning of the planning phase, it has to be verified whether building permits are required.

In the case of several large buildings requiring a considerable planning volume, it is advantageous to commission two local planning offices. This reduces planning time and creates a certain competitive situation.

5.1.5.1 Rehabilitation and rededication of public buildings

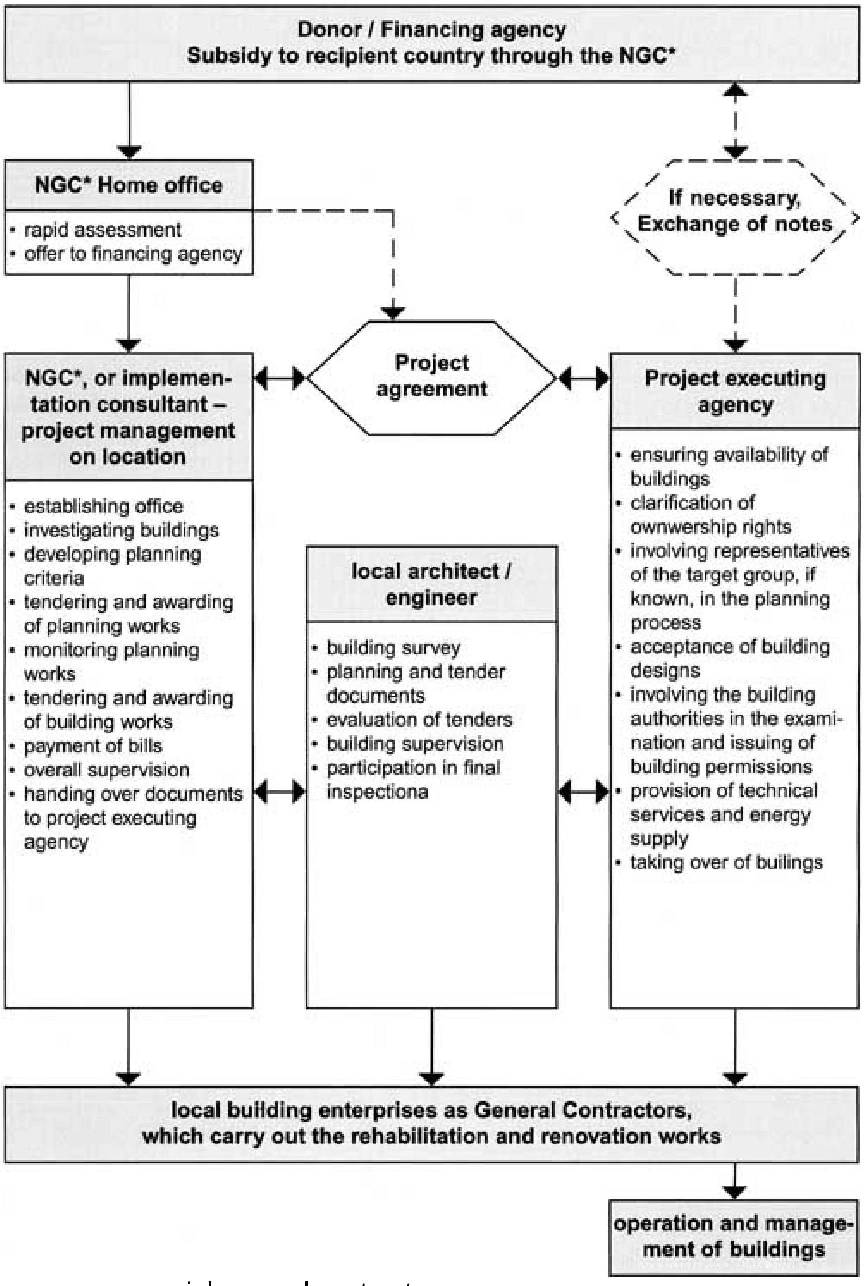

* NGC = non-commercial general contractor

5.1.5.2 Rehabilitation of houses destroyed by war

(1) Private houses

This form of project can make sense if large masses of refugees/returnees or displaced persons are in the country, who want to return home or have to be repatriated and accommodated since they are not able - for whatever reasons - to return to their original houses and region. In pacified regions, partly destroyed private buildings can be repaired or rehabilitated with assistance funds by contractors, on the condition that the owner of the house in return offers shelter in his house to a number of refugees free of charge for a certain period of time (about 2-3 years). This has to be stipulated in a written agreement between the owner of the house and the local administration or refugee office. Such a concept guarantees reliable and rapid repair of numerous buildings. It supports the local population's existing readiness to help and is of benefit for numerous groups.

During a first inspection, the degree of destruction and thus the eligibility for promotion in relation to the opportunities of sheltering refugees/displaced persons are verified. After determining the buildings eligible for promotion, the damages are assessed, the required services identified, and the quantities calculated by local architects, according to the NGC's specifications and on the basis of forms specifically created for this purpose. This simple form of assessment is possible, as damages of individual buildings are generally similar. In this way, technical specifications are produced, which, together with diverse contract documents listed in section 5.1.4, constitute the tender documents.

The restoration of houses should be simple and only deal with the most essential works: all structurally indispensable works, the roof, bathroom, WC, windows (made of insulating glass, if possible, on location), staircases, simple doors, and interior plaster. It is left to the owner of the house to contribute to standard improvements at his own expense.

Calculations of space required per refugee should be fixed at a minimum of 4.5 m^2 and should only apply to dwelling space. Sanitary rooms and circulation space are additional. The subsidy increases proportionately to the number of refugees that can be accommodated in the house.

The rooms of the refugees or displaced persons should be furnished simply by the NGC, the administration, or other aid organisations, with beds, 50% of them bunk beds (problem of acceptance), chairs, tables, cupboards, and each with one simple cooking facility.

The works done by the local general contractor have to be measured and approved by the local architect. The NGC conducts random inspections. A guarantee period of one year should be agreed on.

Case study **C**

Provision of winterised shelter for displaced people and rehabilitation of schools in Tuzla Canton, Bosnia & Herzegovina

Financing agency: **Federal Republic of Germany, represented by BMZ**
Financing volume: **6,698,000 euros**
Period: **1995-1997**

Even before the signing of the Dayton Peace Agreement, BMZ decided at short notice to contribute to the accommodation of refugees and displaced people in Central Bosnia and charged GTZ, amongst others, with the implementation. In the Tuzla Canton alone, about 240,000 displaced people and refugees were given shelter in addition to the approximately 700,000 inhabitants. The attack on the enclaves Srebrenica and Zepa in the late summer of 1995 resulted within a few days in a streaming into the Tuzla Canton of an additional 35,000 displaced people, especially women, children and old people, who could only be temporarily accommodated for the moment, partly under inhumane conditions in tents and mass accommodations.

In order to achieve better results quickly, GTZ realised several implementation models simultaneously, each in close cooperation with NGOs, which were already active on location, and the partly intact local building authorities of the affected townships:

1. Private houses were repaired or extended and simply furnished under the condition that the owners committed themselves to take in refugees for the period of, for example, 3 years.

2. Shared building components, such as the roof, staircase, windows, outside doors, chimneys for heating stoves (but not central heating), and water supply, were repaired in partly destroyed municipal apartment houses, while the returnees did the repair work inside their apartments on their own.

3. Community-owned buildings no longer in use were either extended to become well-equipped community shelters or small simple apartments.

4. A settlement with new four-family houses already under construction was enlarged by 15 houses (60 apartments).

Economic efficiency of the measures was achieved once the stipulated area of approx. 8 m^2/person was attained. Buildings and apartments were provided with minimum furnishing (beds, wardrobes, tables, chairs, hot plates).

After rehabilitation and basically equipping partly destroyed village schools, they were handed over to the school authorities for resumption of classes. On the other hand, large school buildings or public buildings in Tuzla, which had temporarily served as mass accommodations and were vacant again, were rehabilitated and returned to their initial purpose.

Besides Tuzla (30 buildings), the measures extended to Zivinice (100 buildings), Gracanica (22), Prutace (15 new buildings), Banovici and Srebrenik (42), Kalesija and Celic (127 dwelling-houses and 148 apartments).

A total of 5,721 refugees and displaced persons were accommodated within the reconstruction and restoration measures. In applying a mixed calculation, accommodation costs of 1,171 euros per person arise, including all incidental expenses and overheads.

The programme represents a successful example of development-oriented emergency aid. The personal contributions and self-help of house owners, displaced persons, returnees, local authorities, construction companies, workers, and engineers together contributed to the success of the measures, despite the difficult conditions in winter. They provide the condition and hope for the sustainability of the results achieved.

(2) Private or public tenements/apartments

Here too, the degree of destruction of the buildings is the decisive factor of eligibility for promotion. Should this be the case, the measures should primarily concentrate on all structural measures and measures involving community facilities. These are, among others, the roof, external insulation, outer walls, all load-bearing structural parts, windows, staircases, entrance doors to the apartments, electricity, water, and sewage. External plaster and external paint should not be included, in order to avoid arousing envy amongst the less supported neighbours. Inside the apartments: a simple bathroom (shower, WC, wash basin) without tiles, tap and simple cooking facility in the kitchen, and wall plaster. It is a question of budget as to which other building components can be installed inside the apartments (floor covering, interior doors, wall paint, wall tiles). It could also be expected from the owners of the apartments or buildings themselves. The interfaces are to be fixed from case to case.

Possible beneficiaries are, for instance, former apartment owners, who have returned to the buildings, or displaced persons/refugees from outside who temporarily occupy apartments.

Building investigations, planning, tendering, awarding, implementation, inspection, and warranty must be treated as described under the above item (1), "Private houses".

(3) Nucleus model for the rehabilitation of private houses

If the aim is to give as many local families as possible a stimulus for the reconstruction of their destroyed houses with little assistance funds, even without the obligation of accommodating refugees or displaced persons, as mentioned under section 5.1.5.2 (1), "Private Houses", a so-called nucleus model can be realised. After assessing the eligibility for promotion (degree of destruction, neediness) through local architects, according to the NGC's specifications, the promotion generally comprises the following: provision of basic infrastructure (water-supply point, power connection), the roof of the building, 1 living room with windows and doors, 1 wet cell with shower or tub, WC and wash basin, including door and window.

Just like in the preceding models under section 5.1.5.2 (1) and (2), the architect assesses the damages, describes the specifications, calculates the quantities and draws up a tender for the respective amount of buildings. The awarding, implementation, measurement, inspection and warranty must be carried out as described before.

No further measures will be executed on other rooms or parts of the house. It is up to the apartment owner to further complete the building at his own responsibility and with his own financial resources.

5.1.5.2(3) Nucleus model for the rehabilitation of private houses

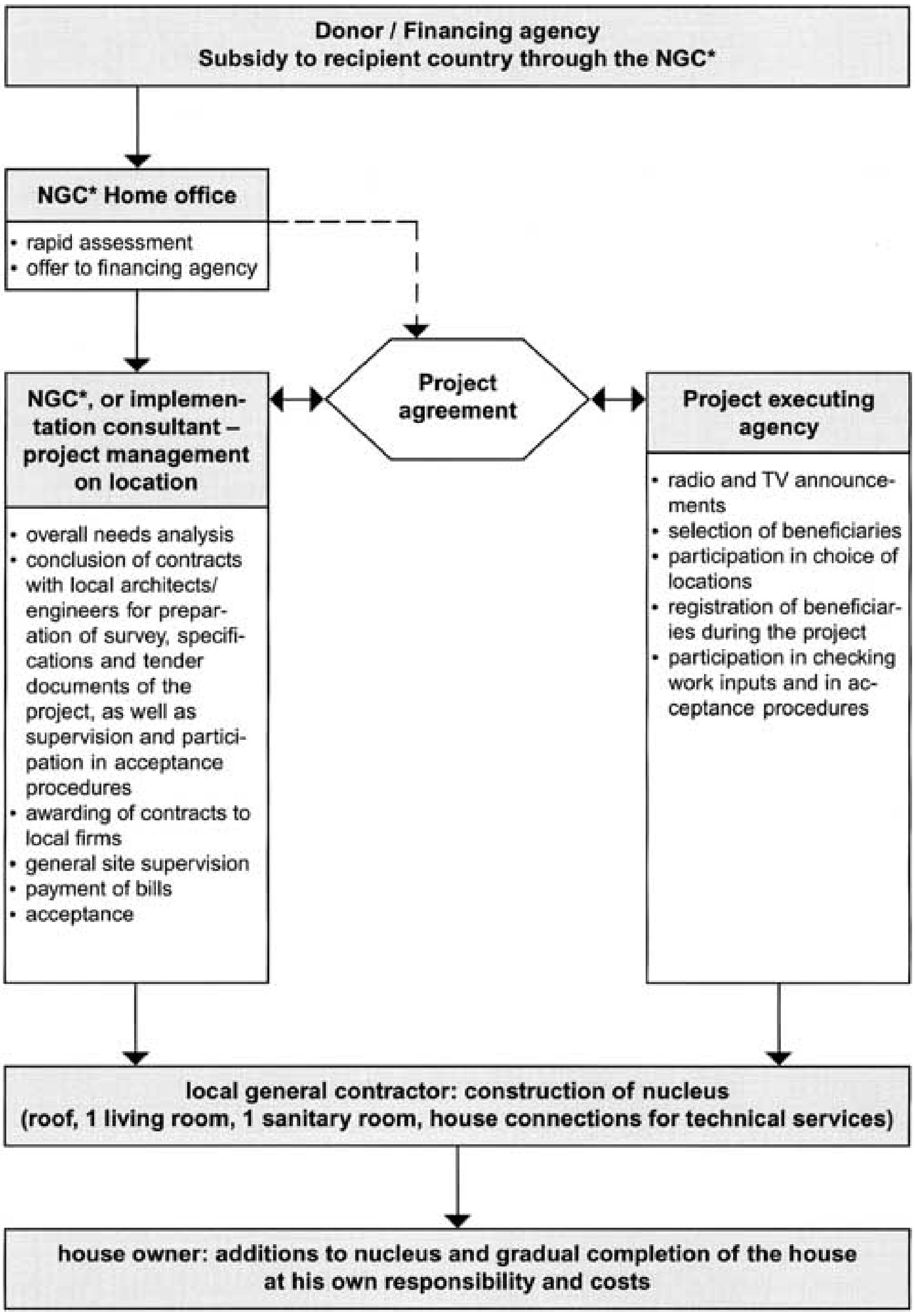

* NGC = non-commercial general contractor

The selection of beneficiaries is carried out together with the local authorities in charge of reintegration and reconstruction. In case the number of buildings and applicants exceeds the possibilities of financial support within a region, the beneficiaries should be publicly selected by drawing lots. This procedure could also apply to other models.

(4) Rehabilitation through financial contributions

In case the project executing organisation is in the position to provide its own qualified professional resources, these are usually building or planning authorities with their experts, the rehabilitation procedure can also be effected via financial contribution. However, a detailed and critical examination of the management personnel through interviews, the office capacities, the equipment, and the general performance capability of these authorities has to be conducted by the NGC beforehand. It is true that community building authorities worldwide do not have the reputation of handling projects quickly. However, in cases of emergencies and disasters affecting all the people in the community, i.e. friends, relatives, and themselves, the motivation to work with greater commitment can be extremely high. Samples of Financing Agreements are not included in these Guidelines. They are only meant for internal GTZ use and can be viewed at the GTZ contracts division.

Case study **D**

Restoration and reconstruction of war damaged buildings in the Fizuli Region in Azerbaijan

Financing agent:	**ECHO (European Community Humanitarian Office)**
Financing volume:	**2,090,000 US** $
Period:	**1997-1998**

At the beginning of 1997, in the course of a joint initiative of UN and EU institutions in favour of the repatriation of refugees to former front areas between Azerbaijan and Armenia, ECHO assigned GTZ; with a trial implementation of restorations and reconstructions in cooperation with ARRA, a government organisation from Baku, which is a state-run organisation in charge of the coordination of all projects for the Azeri refugees and displaced people, as well as the executive committee of Rayon Fizuli. The measures were to serve as stimulus for further personal contributions.

The realisation was exclusively achieved by local staff (engineers, skilled and unskilled workers). Up to 200 unskilled persons were trained “on the job” in the building trade.

A total of 500 houses, divided into categories of different degrees of destruction, were repaired for 548 families, while in general only 1 to 2 rooms were provided with windows and doors, the roof was repaired or newly built, whereas the rehabilitation works beyond that were left to the inhabitants (nucleus model), Where required, hand-pumps for drinking-water were re-installed and simple toilets (ventilated pit latrines) were newly constructed.

A micro concrete roof tile production was initiated through the establishment of two new enterprises in cooperation with Parry Associates (United Kingdom) for technical advice, and KOSIA-SMEDA, one of the NGO’s supported by GTZ in Baku, for commercial management consulting. A total of 44 buildings were roofed with the new material.

The project was completed in 1998. After settling the Nagorny-Karabakh conflict, the population continued with the rehabilitation of further houses on its own.

The average costs of a building’s restoration, including all incidental expenses, costs for the production of roof tiles, and GTZ overheads, amounted to 3,814 US $ per family or 763 US $ per person to be accommodated, assuming that one family consists of 5 persons.

The handling of a financial contribution in emergency and disaster situations requires special control of all activities and measures, that are carried out by the project executing organisation and the actors, the building authorities. Temptations and possible preferential treatments (nepotism) can be especially high in crisis situations. Decisions on the selection of objects in particular, are to be taken jointly with the project executing organisation and the building authority, and confirmed in writing. Here, a representative of the NGC has to be involved. The degree of building destruction, rehabilitation costs, and future use in view of the problem to be solved (e.g. temporary accommodation of refugees, returnees) are to be brought into line economically. Planning and tender documents have to be appraised sporadically by the representative of the NGC to check their plausibility. Likewise the quantitative statements of the services provided. The awarding procedures have to be carefully checked, and, if necessary, particularly significant awarding proposals should be confirmed by the NGC.

It must be agreed in the contract that the transfer of funds to the project executing organisation is implemented in stages, according to the progress of the building works, so that the project can be controlled via the funds. It has to be verified whether the NGC's representative should also sign the contractor's invoices to confirm them. It is true that this is not in line with the philosophy of financial contributions, which require independent action by the project executing organisation, but it can be appropriate in particular situations.

The great advantage of the model "Rehabilitation through financial contribution" lies in the fact that rehabilitation and reconstruction are almost exclusively associated with personal contributions, i.e. self-help, by the project executing organisation and its affiliated structures, thus securing jobs in the administration. The condition is, however, that efficient structures exist. In disaster situations and post-conflict regions, a financial contribution should always be granted in connection with an external controlling entity (e.g. NGC). In this model, delays have to be taken into account.

(5) Credit financing

In great emergencies and immediately after disasters and acts of war, public and private aid (donations and the like) lead to measures that are financed by grants, as gifts or financially lost subsidies. Experience has shown that in this way only a relatively low percentage of the affected is reached. After the situation has calmed down, credits by development and reconstruction banks (e.g. ADB, KfW, various funds) can be granted to private house owners for reconstruction work at very favourable conditions. These banks are prepared for such aid programmes and dispose of ready-made models. Understandably, the procedures for these models are lengthy. However, they can reach a greater number of affected persons and promote their self-initiatives. The respective authorities in the affected country (e.g. Ministry of Construction) have to contact the banks.

Case study **E**

Housing and social facilities for earthquake victims in Western Turkey

Financing agency:	**Federal Republic of Germany, represented by BMZ, Republic of Turkey, represented by the Ministry of Public Works and Housing.**	
Financing volume:	**BMZ, for shelters and social facilities:**	**11,250,000 euros,**
	for a temporary emergency hospital and med. equipment:	**767.000 euros**
	German contribution:	**12,017,000 euros**
	Republic of Turkey, for the technical infrastructure, about	**5.625.000 euros**
	Total costs	**17,642,000 euros**
Period:	**1999-2000**	

On 17 August 1999, an earthquake of magnitude 7.8 on the Richter scale, destroyed more than 1,000 mostly four-storey houses in the Marmara region in Western Turkey. The number of lives lost was officially estimated at approximately 15,000. According to the Turkish Ministry of Construction there was an urgent need to accommodate about 120,000 people in temporary, winterised shelters.

The German Federal Government, represented by BMZ, agreed to have shelters erected for approx. 9,000 earthquake victims in Alançuma, Bolu-Karaçayir and Bolu-Karayollari, and assigned GTZ with their implementation.

The Turkish contributions comprised the provision of adequate land, the preparation of the sites, as well as the construction and provision of the required technical infrastructure (drinking-water, sewage system, energy supply, and roads).

The German contributions included the supply (including foundation) and turnkey erection of temporary dwellings, including a sanitary unit, small kitchenette, electric heater, and basic furniture. Tenders for the building works were launched on the Turkish market and a Turkish construction company was commissioned with the supply and furnishing of the prefabricated houses. Supported by the GTZ office in Ankara, GTZ coordinated, controlled, and monitored the works.

After a second severe earthquake on 12 November 1999, in the Düzce/Bolu/Kaynasli region, BMZ provided GTZ with a further 767,000 euros as additional commission for the building of a temporary emergency hospital in Düzce and for the supply of mobile medical equipment. Already at the beginning of 2000, still during winter, people moved into the first shelters. On 7 April 2000 the Turkish President Süleyman Demirel and the German Federal President Johannes Rau, officially inaugurated the Bolu-Karayollari settlement. In total, 1,608 housing units for more than 9,000 earthquake victims, and in addition 2 schools (8 classes), 2 kindergartens, 3 women's centres, 3 social centres, 3 health stations, 3 administration buildings, 2 youth centres, and 3 assembly buildings, had been erected by GTZ.

The costs of the German and estimated Turkish contributions amounted to approx. 1,875 euros per earthquake victim, including all incidental expenses and GTZ overheads.

5.1.5.3 Construction of new housing settlements

When streams of refugees with many thousand people cross the borders to the neighbouring countries without having sufficient accommodations there, the building of temporary housing settlements is often immediately considered an option, sometimes without the decision making bodies being clearly aware of the conditions and consequences.

For the building of new housing settlements, immense efforts are required and the highest expenses arise in relation to all other comparable emergency shelters per accommodated person. The building of settlements is extremely time-consuming and commits the local authorities to operate and carry the costs of these settlements for a long time. A permanent utilisation is to be expected as, for the most part, permanent settlements develop out of the temporary settlements due to housing shortage. That is the rule.

In case the decisions still lead to housing development, the following has to be pointed out:

(1) Choice of location (see also section 4.4)

Most important is the choice of location. It is to be pushed with all available means from the beginning, since the procedure is relatively time-consuming due to the numerous criteria to be considered (property rights, land use plans, exposure to hazards, infrastructure, costs, and many more). The project executing organisation, or authorities contracted by it, have to submit proposals for alternative sites. The NGC's representative has to verify these. For social reasons the site should be reachable on foot at an acceptable distance from an existing village or town (school attendance, shopping, medical care, authorities).

For greater distances, the local authorities have to establish bus connections. The locations are not to be exposed to pollution.

In case, for example, the location is incorrect, or the chosen standard was too low, or errors were made in the planning concept (social, religious customs were not taken into account), settlements may not be accepted by the original target group. This risk underlines the meaning of the choice of location.

(2) Site selection criteria (see also section 4.4)

Experience shows that in the case of dense layouts a site area of 45 m^2 per person is needed. This includes all required spaces for streets, paths, social buildings (schools, administration, kindergarten, etc.), playgrounds, and a small strip around the shelter for gardening. This scale should be set as a goal - however, smaller surfaces are conceivable, if the technical and social infrastructure are partly covered otherwise.

The size of the housing settlement(s) to be planned should not exceed 2,500 people, in order to limit the impact on the environment and to be able to establish a manageable internal settlement administration. Smaller settlements have the advantage that the provision of energy and infrastructure can be solved more easily. All reflections regarding the planning of settlements should ensure that dimensions and standards do not exceed those of the local population, in order to contain their envy.

5.1.5.3 Construction of new housing settlements

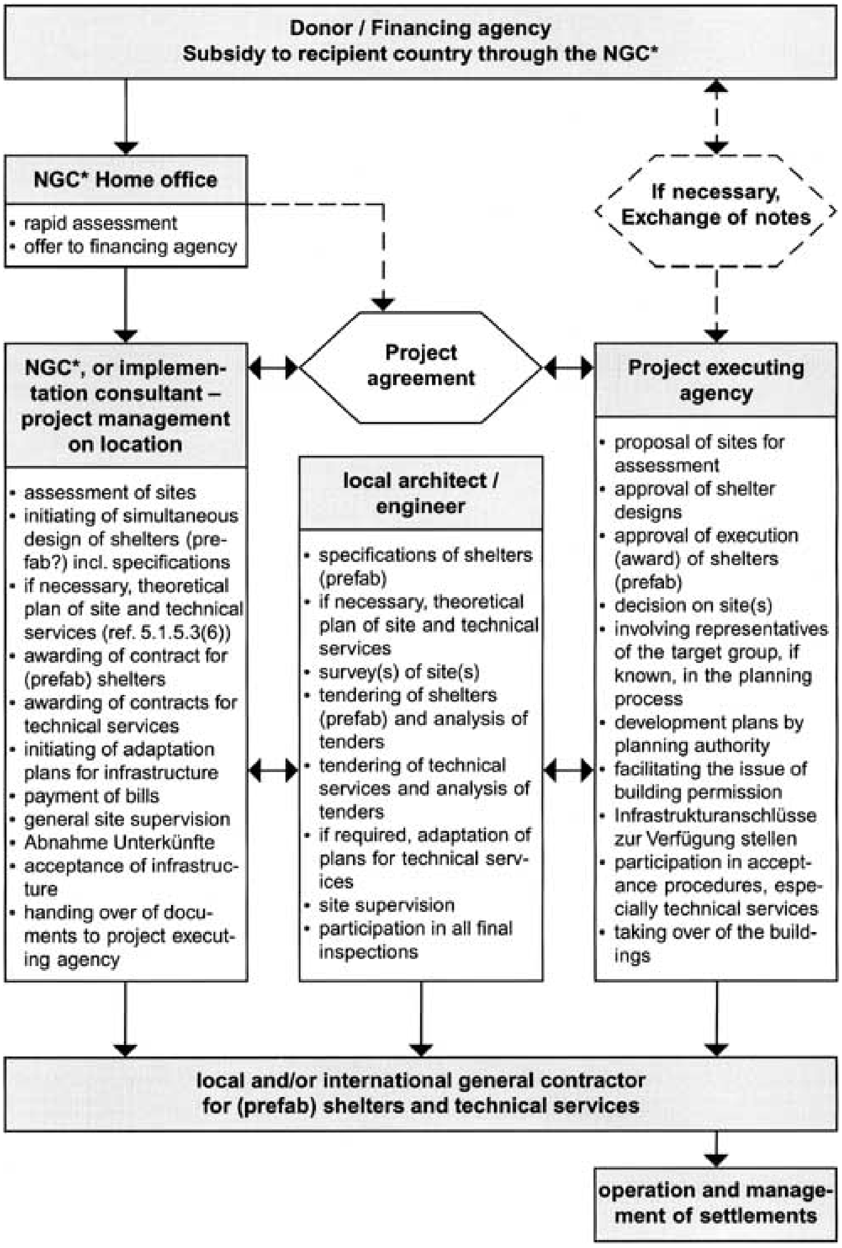

* NGC = non-commercial general contractor

Case study **F**

Construction of new housing for refugees returning to Gradacac/Modrica, Bosnia & Herzegovina

Client:	**The city of Düren, with financial support of the EU, the Federal State of North-Rhine Westphalia and BMZ**
Financing volume:	**1,252,700 euros**
Period:	**1998**

The repatriation of refugees to their home country is usually associated with a number of problems and unforeseen events, especially if refugees are granted asylum in a Western European country and have settled there. The city of Düren found a solution, which has attracted much attention, both nation-wide and internationally:

Already in 1992, the City of Düren took in to a large number of refugees from the community of Modrica, a village in the Bosnian Serbian region Republika Srpska, and tried intensively to repatriate them. At the beginning of 1998, after lengthy and difficult negotiations, the City of Düren succeeded in obtaining the permission to build a “temporary” settlement and shelter in the community of Gradacac for precisely these refugees in Düren. Gradacac is situated near Modrica, the home town of the refugees. It was, however, separated from Modrica, by the so-called “ethnical demarcation line” between the Bosniac Croatian Federation on the side of Gradacac and the Republic Srpska on the side of Modrica.

In March 1998, the City of Düren charged GTZ with the erection of a completely new settlement of 61 housing units near Gradacac. Five types of apartments different in size enabled accommodation made-to-measure. After a tender, prefabricated houses produced in Bosnia and the technical infrastructure were erected by a Bosnian general contractor under GTZ’s coordination and control.

In September 1998, six months after the commissioning, the repatriation of the refugees from Düren could be carried out. 2,354 m^2 dwelling space had been created for 61 families, including 203 returnees, at the price of 461 euros/m^2 and expenses of 5,345 euros per person. The development costs included (water supply, sewage system, supply of electricity) were extremely high at 1,917 euros/person, but absolutely inevitable.

The high expenses were the result, among other things, of the high demands of the host community of Gradacac, which intends to use the buildings after the departure of the refugees to Modrica for as long as possible for their own purposes, which is why they insisted on having larger floor space per person.

The community of Gradacac also insisted on the construction of an access road for the region, which would not have been necessary for the refugee settlement. As a compromise, the construction and the expenses of 166,200 euros were then accepted. If these expenses are taken into account in the costs of repatriation per refugee, total expenses of 6,170 euros per refugee arise. However, in the long run, this road is very important for the development of the region.

Nevertheless, the project paid off and was worthwhile in three respects: for the city of Düren the return on the investment costs was quick, since the living costs provided per refugee are very high in Germany. The refugees live close to their hometown and meanwhile (2002), coming from Gradacac, some of them were able to repair their houses in Modrica or even return to Modrica completely. The community of Gradacac will now receive new adequate dwelling space for their own use and an access road for a sustainable development.

The technical conditions of a site are: weatherproof road connections (also open to lorry traffic), connection to electricity supply, other energy sources (if available, e.g. gas), water supply, sewage mains or proximity to drainage canal. Should all of this not exist, it is necessary to install autonomous systems. This means, for example, the construction of bore wells or dug wells with overhead storage or pressure tanks, power generator, sewage plant, supply of solid fuels, and the like. Self-sufficiency requires considerably higher investment, operation and maintenance costs. The settlement facilities mentioned above refer to regions with a relatively high standard of living (Balkans, Western Turkey). The construction of settlements can, however, also become necessary in substantially less developed regions, where just the simplest technical infrastructure is adequate. Consequently this may mean: simple water supply through centralised water taps, construction of latrines, and simple electricity supply with lower capacities per housing unit.

As far as possible, the site should have a slight inclination of 1% and more, but not exceeding 7 to 8%. With steeper sites, the higher development costs (such as retaining walls, escarpments) bear no relation to the investment in the building. With regard to the sewage plant and overflow discharge, the inclination of the site has to be oriented towards the drainage canal. As an alternative to the drainage canal, underground seepage or oxidation ponds for biological purification of sewage are conceivable.

The highest ground-water level should not be higher than 3 m below ground, since otherwise natural slopes are not sufficient for sewage disposal and dirty water pump systems will be required (maintenance and repair problems).

The condition of the ground should facilitate the construction of sewage ducts, cable trenches and the like.

(3) Energy supply (see also section 4.4)

The provision of fuels for cooking and heating often constitutes the biggest technical supply problem. In general, wood as fuel does not apply, as the required quantities would be too large. In exceptional cases, the region disposes of coal or brown coal deposits, enabling a controlled fuel supply of the households via the settlement administration. Storage capacities per housing unit would have to be created for this. Paraffin/kerosene stoves and lamps are offered by specialised manufacturers, however, the local market must be able to ensure the paraffin supply. The same applies to the supply of propane gas or natural gas and devices. In regions with almost sufficient electrical energy supply, electric heaters are conceivable. This kind of supply is elegant and can be easily realised, but is generally expensive. With the help of small financial contributions of their own, the consumers should be made aware from the beginning, as to how significant and expensive the energy supply is. Meters for water, electricity, and, if necessary, natural gas should be installed in the housing units from the very beginning. They create the conditions for future accounting procedures and economic consumption.

(4) Emergency shelter

From experience, the choice of locations for one or more settlements takes a long time and precious time is lost. This time ought to be used to start immediately - independent of location decisions - with planning, tendering and awarding of shelters, usually prefabricated buildings, parallel to the search for the site. In certain circumstances the same can apply to the planning and tendering of technical services. Further information on this is given in the following item (5), “Settlement planning and technical services”. For “Basic planning criteria for simple buildings worldwide” see the explanations in chapter 6.

Should the situation permit the erection of the complete settlement, i.e. prefabricated houses and technical service, by a general contractor, both tenders have to be launched at the same time. However, a separation of these tenders is common. It is not unusual that the regions of the new settlements and the production locations of the prefabricated houses are located in different countries, thus joint ventures cannot be formed at short notice.

Emergency shelters are always housing units with one or better still two small rooms (for privacy), and depending on the standard, either with or without WC/shower and cooking place in the house. It is advisable to combine two housing units to a semi-detached house.

Combinations of more housing units, for example, as terrace-houses, are also conceivable. However, they affect the privacy and identification of the people with their temporary homes, due to the limited distance between them. Furthermore, the development of small gardens or individual extensions of the buildings by the resident is more or less impossible. Building extensions, with varying success, are often to be observed.

For housing units, only one but no more than two standard floor plans should be realised. The problem of different floor plans is that with the expected change of occupants in the course of time, the dwelling that just became available is most likely to be unsuitable for the new family, being either too large or too small.

The space requirements can vary from 3.5 to 6.0 m^2 per person, depending on the budget situation and the way the disaster victims or refugees used to live in their former homes. These spatial requirements are confirmed by UNHCR and have been realised in numerous projects by GTZ and NGOs. It should not be forgotten that the focus is on temporary emergency shelters and that the prime aim is to repatriate the affected people as fast as possible to their homes or original housing area.

Even if the accommodations are only temporary it is to be verified whether a building permission has to be obtained from the local building authority.

The chosen construction of the shelters must be resistant to earthquakes and storms. The manufacturer must provide verifiable structural analysis and plans.

General technical specifications are the basis for a tender of emergency shelter and should enable the manufacturers of various materials and technologies, who fulfil the conditions, to offer their products. An offer should always be turnkey, which means complete, including transportation and assembly on site, preferably also including the construction of the foundation on site, so that the supplier is responsible for dimensional accuracy. Water, including the shut-off valve, and sewage have to be offered frost-free up to 1 m outside the house. The service company builds the inspection chamber. The electrical installation must be supplied including fuse box and transmission relay to an overhead cable or an earth cable. An overhead cable is generally less expensive. The coordination of the interface from the dwellings to the technical services is the responsibility of the project controller’s site supervision. The specifications of the dwellings should contain data - depending on the climatic region - on the minimum thermal insulation of the floor, roof and walls, the maximum wind and snow loads, as well as details of windows (small sizes, insulating glass or at least 4 mm single glazing) and insulation of exterior doors. Internal walls should not be made of metal, but of chip board, plywood or plain wooden boards. Fire retardant material is desirable. The specifications should include a floor plan and section drawing of the shelter (scale 1:50).The clear height of the rooms should be 2.35 m on average. The roof overhang is meant to discharges the rainwater away from the house, but in order to avoid damage in storms, it should not exceed approx. 30 cm, depending on the material.

Many suppliers affirm to be able to build emergency shelters. The essential criteria for selecting manufacturing companies are:

- Appropriate simple technology and material of the products,
- manufacturing capacities for the supply of large quantities in the required time,
- organisation and international know-how adequate for turnkey production in the project region,
- commercial creditworthiness.

The problem in Europe and other industrialised nations is that prefabricated buildings are manufactured in production lines and the standards of production in most cases are far too high for emergency shelters. Thus new productions must be conceived, requiring time and an appropriate commission volume. In newly industrialising (emerging) countries, production can be cheaper. Large companies in industrialised nations have their contacts there and thus remain interesting competitors. See section 4.7 for more. Having similar contacts, the NGC can also buy these services in emerging countries.

Cooperation with companies from the affected region is always worthwhile as long as their performance capability can be expected, even if justifiable delays have to be reckoned with. A detailed inspection of this issue by experienced personnel of the NGC or the implementing consultant is required here. If applicable, the decision should be agreed upon with the donor/financing agency on the condition that the construction time may be longer, but in return the houses will be cheaper and thus available to a larger number of needy.

(5) Settlement planning and technical services (see also section 4.4)

Settlement planning always has to be implemented in accordance with the local planning authorities. A settlement plan corresponds to an area development plan and is a massive intervention in the existing structure and development of a whole region with long-term consequences. Most of the affected countries dispose of such planning entities. They are in charge of the activities and decisions described under the above mentioned item (1), “Choice of location” and item (2) “Site selection criteria”. Most of the planning authorities insist on carrying out the development plan, more or less detailed, themselves. Generally, basic settlement concepts and parameters do exist in a building authority. They often already existed for other purposes before the disaster happened. They will have to serve as orientation, even if these planning concepts were never meant for emergency shelters. Besides, the plans also have to be formally approved by the building authorities. Together with the planning authority and political decision-making bodies, to be appointed by the planning authority, the question of after usage has to be decided on. Here, needy local people or vocational groups of the host country can be named, who will move into the apartments after the departure of the current disaster victims. These considerations will have an influence on the planning of spatial requirements and standards. Decisions have to be made, for example, as to whether or not the beneficiaries are granted a bit of space around their shelter for gardening. It will also be decided, for instance, whether the required development of the settlement can also be used later to build single-family houses, which would ensure the sustainability of at least a part of the investment.

The experts seconded by the NGC can participate in the elaboration of the development plans in different ways. In the interest of an appropriate and quickest possible realisation they ought to decide together with the planning authorities who will take over which planning services. They should also make sure that the space requirement of 45 m^2 per beneficiary, as already mentioned under (1), is fulfilled, they should insist on minimum spacing between the buildings (flash over of fire), ensure that the required social buildings (see also the following item (7) “Social buildings”) are incorporated, and demand sufficient street lighting (sense of security).

They should also intervene when generous planning conceptions threaten to exceed the budget frame. When building several housing settlements, it may be necessary to cooperate with various planning authorities in different provinces. Here it becomes obvious that such development plans take their course and consume time.

If it is not clear where, on which site, and for how many people something shall be built, planning becomes quite difficult. However, there is a possibility to work ahead and save a decisive amount of time. The NGC’s experts should inform the planning authorities and the project executing organisations about the following possible procedures:

(6) Theoretical plan of site and technical services

The NGC, being in charge of financing the required site plan and technical services of the housing settlements and intending to charge a planner with it, commissions the planner in advance with the draft of a so-called “Theoretical plan of site and technical services” (see figure 1). Based on the assumption of a theoretical requirement of land for shelters, roads, social buildings, other open spaces, etc., a theoretical development plan can be developed. It can be assumed, for example, that there will be 2,000 people per settlement and a site area of 45 m^2 per person. Based on this information, the infrastructure planner calculates cable and pipe cross-sections, specifies all other services, and theoretically calculates their quantities.

The tender will be based on these specifications and the commission will be placed. All unit prices and the approximate quantities are now known and the contractor is all set to start. The 4 to 8 weeks, which were needed to search for appropriate sites and draft the final development plans in or together with the building authorities, were profitably used.

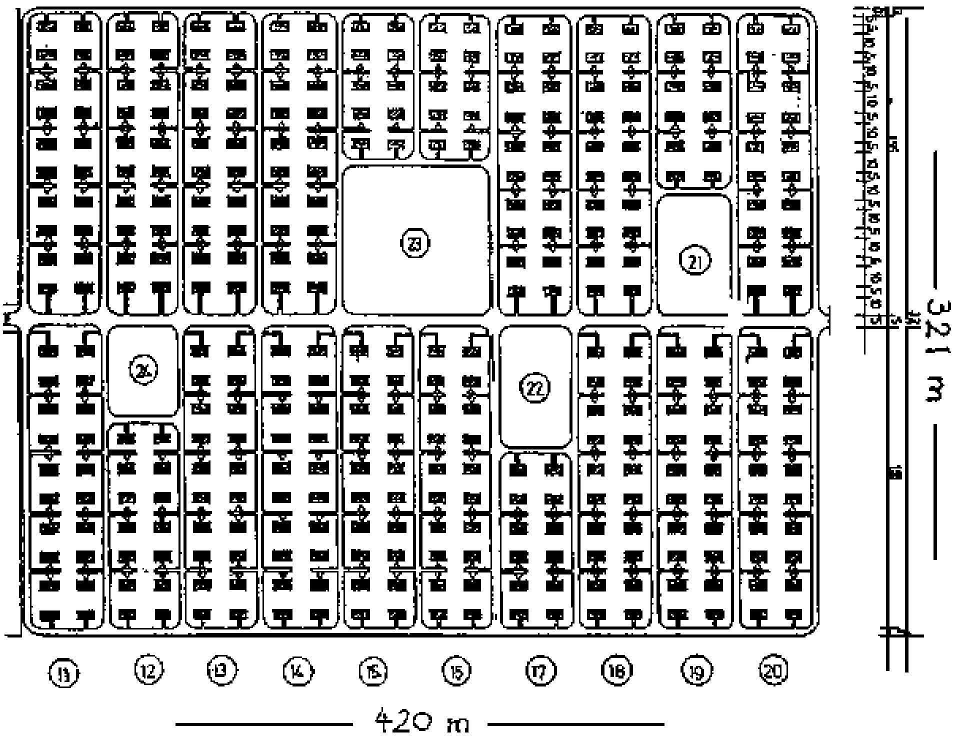

Fig. 1 A theoretical development plan

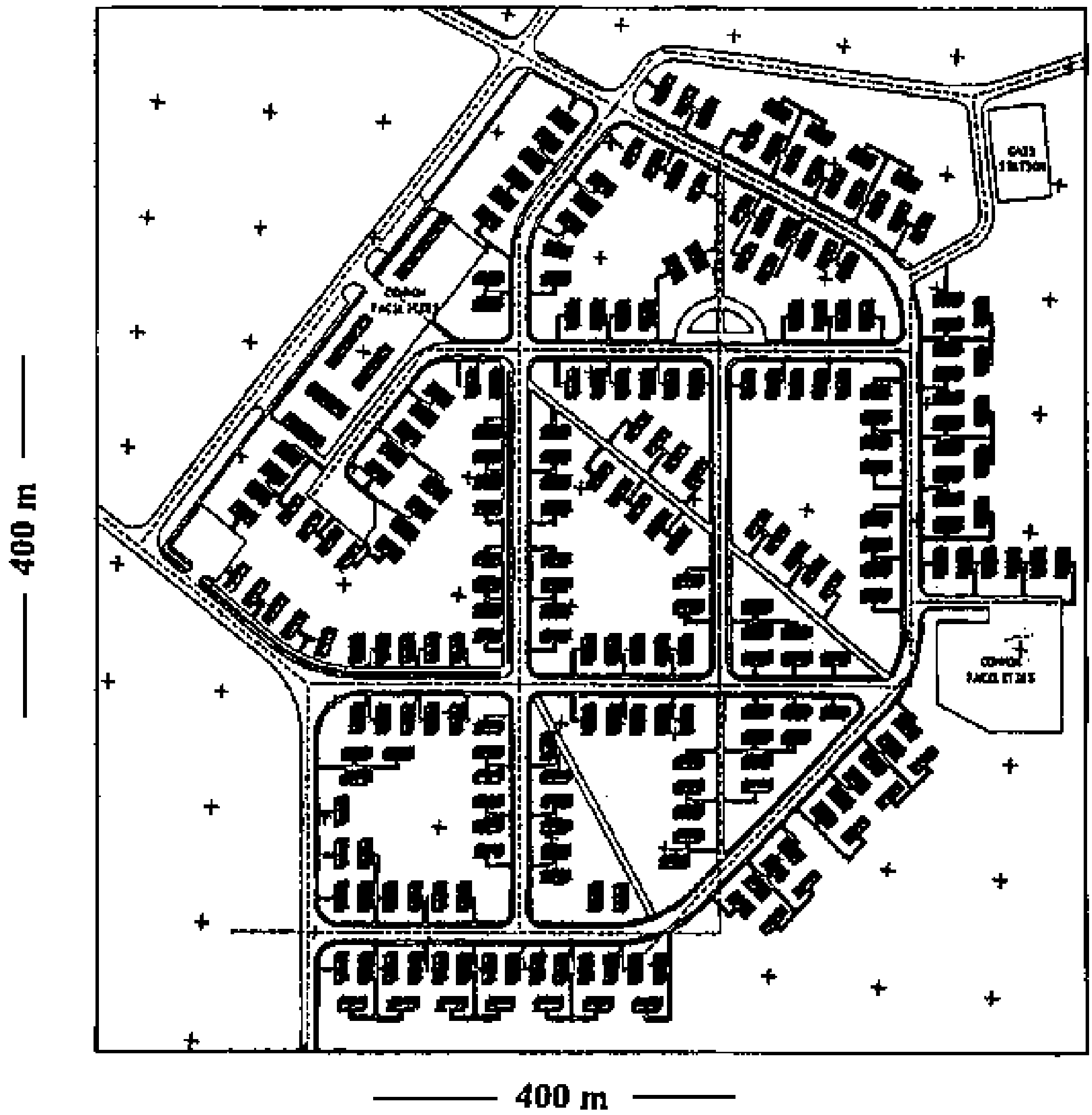

Fig. 2 The actual implementation plan (settlement in Karlovac, Croatia, 1993)

After decisions have been taken on the locations and sites, implementation planning according to the actual sites is carried out simultaneously with the beginning of the contractor's rough earthworks. Further implementation planning is gradually elaborated and handed over to the contractor. Billing is effected according to the actual expenses and dimensions, on the basis of the existing unit prices. Costs for possible new services are negotiated and fixed.

Experience shows that housing settlements of medium standard, erected within the framework of emergency measures in moderate climatic zones, do not, in the course of years, necessarily turn into slums. It is true that inhabitants come and go, but in general they take good care of the buildings. Apartment shortage and demand is too latent in most countries. It also depends on how intensively the local administrations take care of the settlements' operation.

Case study **G**

Refugee settlements, building rehabilitation and extension as humanitarian aid in Croatia

Financing agency:	**Federal Republic of Germany, represented by the Federal Foreign Office (AA)**
Financing volume:	**25,565,000 euros**
Period:	**1992-1993**

Post war period means lost homes, expulsion and flight for a lot of people. In Bosnia and Herzegovina alone, 2.5 million people lost their homes in the war in the Balkans in 1992/1993. About 800,000 had to flee. Hundreds of thousands of people from Bosnia and Croatia moved towards Central Europe.

In the summer of 1992, long before the Dayton Peace Agreement, the government of the Federal Republic of Germany decided, within the framework of humanitarian aid of the Federal Foreign Office (AA), to provide 50 million DM (25,565,000 euros) for the accommodation of approx. 20,000 displaced persons and refugees in winterised shelters in Croatia. Approx. 8,000 persons were to be accommodated in three settlements to be newly erected and approx. 12,000 persons in buildings that were to be rehabilitated or restructured after having been more or less destroyed by war.

At the end of July 1992, the AA appointed GTZ to be General Contractor for the complete project, until then, the largest single project worldwide of the German Humanitarian Aid. GTZ accepted the task without initially knowing where to build, how and for whom.

As a result, scattered over the whole of Croatia, a total of 39 buildings were converted into collective shelters, with sanitary installations, basic furnishings and partly with heating (e.g. 10 hotels, 7 schools, 5 community buildings, 4 hospitals, 2 barracks, 2 old people’s homes, 1 factory, 1 museum, 1 orphanage, 1 mineworker’s home, 1 youth camp and others more). The cost per refugee amounted to 597 euros, including all incidental expenses and overheads.

In the three settlements to be newly built, with the sites not certain upon commissioning, 8,000 persons were to be accommodated. On the basis of a theoretical building plan of 3 settlements for 2,700 persons each, the building works were tendered and the commissions for 3 different locations were placed. It was only after deciding on locations that the implementation plans of the infrastructure could begin and were pushed ahead simultaneously with the building implementation and gradually realised. The measured quantities of the actually rendered services formed the basis for the calculation and remuneration after completion. This procedure applied to a total area of 51 hectares. An extremely rainy autumn had building vehicles sometimes sink 50 - 70 cm into the topsoil mud of the building sites.

Plans were made with a Croatian general planner. Two Croatian general contractors executed the technical infrastructure. A total of 800 pairs of semi-detached houses with 1,600 housing units, as well as 14 social buildings (schools, kindergartens, health stations, administration buildings) were built by a German-Turkish consortium in turnkey construction using prefabricated, lightweight elements. Each pair of semi-detached houses was provided with a shared bathroom, gas heating (centrally supplied), and basic furniture. In mid-October 1992, building started, with the completion and the moving in of 8,000 refugees being realised in a construction time of 5 months, middle/end of March 1993. The locations of the settlements are Karlovac, near Zagreb, as well as Rokovci and Cepin in Eastern Slavonia. Ten years after completing the three settlements they are all still functioning and have been extended and partly planted with much loving care. A church, as well as additional schools have been built and complete the infrastructure. The serious housing shortage and partly unsolved returning conditions of the refugees to their country of origin make it necessary for these settlements to be retained for the time being.

The costs for the provision of 52,750 m^2 of space for shelters and social facilities amounted to 18.4 million euros. This resulted in expenses of 349 euros/m^2.

For an accommodation of 6 people per housing unit and 5.25 m^2/person, the individual costs, including all incidental expenses and GTZ overheads, amounted to 1,917 euros per refugee.

(7) Social buildings

Independent settlements exceeding a certain size urgently require social buildings, either within the settlement itself or in the neighbourhood. Social buildings are understood as premises for:

- administration,
- kindergarten,
- elementary school,
- health care stations,
- shops for food provision,
- assembly rooms (also to be used as prayer rooms),

or parts of these.

At the beginning of the planning phase the surroundings of the new settlement have to be inspected with regard to them. Social buildings can be very simple structures. On the other hand, the high utilisation frequencies they will be exposed to, have to be taken into consideration. They can be executed with the same technology and construction as the shelters or, in another appropriate form.

Some of the donors/financing agencies and also project executing organisations are not aware of the significance of social buildings in the immediate neighbourhood of the dwellings and disapprove of them, because they are only interested in financing the direct provision of shelter for the needy, i.e. providing a “roof over their heads”. Here, the NGC has to do a lot of convincing, since otherwise considerable problems will inevitably arise. In the planning of the settlements sufficient open spaces have to be incorporated.

Case study **H**

Reconstruction of a school destroyed by earthquake in India

Financing agency:	**Bild Hilft e.V. (“Ein Herz für Kinder”), Hamburg**
Financing volume:	**879,879 Euros**
Period:	**2001 - 2003**

The devastating earthquake of magnitude 7.7 on the Richter scale, having claimed about 30,000 human lives in the West Indian federal state of Gujarat on 26 January 2001 and having almost completely destroyed numerous towns and villages, was one of the worst disasters the region has ever experienced. Luckily the earthquake happened at 08.45 h in the morning and on top of it on “Republic Day”, a national holiday, when most people were outside participating in the celebrations. It is hard to imagine what would have happened if the quake had hit the region at night, when most people would have been in their houses.

The editor-in-chief of the German newspaper “BILD-Zeitung” in Hamburg sent a team of reporters to the disaster region to report on the situation there. At the same time, the aid organisation “Ein Herz für Kinder” (“A heart for children”) published a call for donations in the “BILD-Zeitung”. The fund-raising resulted in more than 1 million euros in donations. As a priority, the money was meant to help children in villages that were most severely hit. During their search, the team of reporters discovered a completely destroyed boarding school for mainly disabled children in Bhachau, a village in the Kutch region, close to the border of Pakistan. Subsequently they decided to use a large part of the donations for the reconstruction of the school.

GTZ was assigned with the implementation of the project. In a limited tender an architectural firm from Ahmedabad was chosen and charged with the design. The tender and awarding of the building works were effected in accordance with the FIDIC guidelines, with a construction company from Chennai being appointed. The Diocese of Rajkot is the project executing agency for the St. Xavier's High School, Bhachau. After completion, the school will take on up to 800 children, especially from poorer classes of society and disabled children.

The main problems to cope with were the late granting of the building permission, the fear of war in the border region due to the India-Pakistan conflict, the repeated outbreaks of bloody riots between Hindus and Muslims in Gujarat, and the constant price increases. The building costs were considerably above the country's average, since the highest earthquake resistance was stipulated.

The campus, having the size of about 2 hectares, offers enough space for two school buildings (main building with 20 classes and pre-school with 4 classes), a hostel for 28 girls and 56 boys (a novelty in the region), a house for nuns and female teachers, as well as a house for priests and male teachers. Additionally, large open spaces are provided for sports and games. Assuming a number of 800 pupils, the costs amount to approx. 1,100 euros per pupil, including all incidental costs and GTZ overheads.

Case study **I**

Rehabilitation of schools in flood areas in Cambodia

Financing agency:	**Federal Republic of Germany, represented by BMZ**
Financing volume:	**375,000 euros**
Period:	**2000 - 2001**

Since July 2000, ongoing heavy rainfalls led to inundations of the Mekong and Ton Le Sap in Cambodia. Besides severely damaged houses, roads, and bridges, it also caused the collapse of large parts of the social infrastructure. Health centres, teachers' colleges and schools were especially hit. More than 18% of the schools in the country had to interrupt classes.

BMZ assigned GTZ to support the efforts of the Cambodian Government in reactivating the schools affected by the floods as soon as possible, between December 2000 and March 2001.

One of the first steps was to set up an interim coordination office in the Ministry of Education. The measures were implemented exclusively and at all levels with the staff of the Ministry of Education. In the capital, mainly the departments of planning and real estate were concerned, while at province level coordinators from the province administrations of the ministry were especially appointed, and at district level the school committees comprising parents and teachers were assigned with the task. The project itself was restricted to the provinces of Kandal, Kampot, Kratie, Takeo, Pursat, Kampong Cham, Kampong Chnang, Kep and Koh Kong after reaching an agreement in the Ministry of Education with the other donors. Basically the following tasks were implemented:

- Conclusion of 128 local subsidy contracts with school communities for the creation of 435 new classrooms (including benches and tables) using locally adapted timber construction;

- within the framework of 196 further subsidy contracts, restoration of 1,031 damaged classrooms (including benches and tables);

- distribution of 19,000 boxes of chalk, 490,000 pens, 135,000 black boards, and 111,000 exercise books to all 801 schools affected by the floods in the selected provinces.

In the preliminary stages of the project, the planning department of the Ministry of Education, in cooperation with an expert of UNICEF, had already developed 2 basic types of classrooms, the plans and drafts of which were to serve the school communities as stimulus, but not as condition. On the basis of these plans, the department of real estate drew up a menu of materials that can be supplied locally and fixed their local prices. Out of this menu the school communities could select an assortment of materials at a price of up to 300 US $ for the erection of a classroom for 40 pupils. A similar list had been prepared for repair works, the maximum rate being 300 US $ (but including 15% expense allowance as substitute for WFP-food rations). The building and equipment measures amounted to a total of 375,000 euros, including the GTZ overheads.

It is assumed that a total of about 60,000 pupils have taken benefit from the building and repair measures. Thus for each pupil an amount of approx. 6 euros was invested, including the expenses for the supply of teaching materials, schoolbooks and equipment, as well as all overheads.

Furthermore, the coordination office mobilised food supplies, via the WFP, worth approx. 45,000 euros, for the 128 school communities that erected new school rooms. The establishment of the coordination office itself led to the immediate provision of a further 402,860 US $ by OCHA, SIDA and the Polish embassy for similar measures in other provinces.

5.2 Self-help models

5.2.1 General

Self-help models contain a range of possibilities of transferring knowledge and new building techniques to the target group, especially in the field of disaster-resistant building. Furthermore, they strengthen the target group’s organisational potential and favour the early formation of neighbour relationships and communal spirit. The improved opportunity of participating in decision-making creates acceptance for the project and widely ensures an implementation that meets the demand. The weighting of the share of personal contributions towards external promotion influences conflict-related impacts of the building measure. A combination of self-help and contractor models in respective sections is also possible.

Compared to contractor models, self-help models generally lead to a prolongation of the building measure. In most cases, the costs of the whole project do not decrease, since considerable consulting and training components are required.

Building is a technical discipline requiring planning, engineering expertise, and manual skills, even when dealing with repairs of supposedly simple buildings and shelters. By far not all people affected by natural disasters or war-induced destructions are technically and physically in the position to repair their buildings in self-help or to reconstruct them in a different location. The opposite is often the case. The fight for survival, i.e. food provision, health care, care of families and the elderly, commits their forces, so that the affected are not even available for minor works. In war situations, many households are run by women on a temporary or long-term basis, since the men might still be in military service or may have died.

In general, self-help to provide shelter for the family can only be realised with one’s own house or apartment. In situations where people have fled or have been displaced, self-help is only rarely possible, as their stay is only temporary with the aim of returning to their home country. This is especially true for complex building measures in moderate climates and relatively developed zones requiring high investments and a long-term securing of property.

As long as the households do not give up any other income generating employment, which would further worsen their economic situation caused by the emergency situation, self-help models present possible solutions. In societies marked by agricultural self-sufficiency the cultivation of basic foodstuffs must not be affected by the participation in construction measures. In principle, refugees or displaced persons (generally men) can apply as skilled or unskilled workers to the construction companies in charge of building shelters. However, chances are limited here, too, as companies first employ their own workers, who they know well.

In the context of self-help issues, not only the directly affected local population and the refugees have to be considered, but also the countries' production forces as a whole. The services of the project executing organisation, the political decision-making bodies, and, last but not least, the companies and people of the local construction industry contribute considerably, even if local planners and construction companies, for example, are paid from the donors' funds and benefit financially. These earnings immediately flow back into the circulation and foster the economic development of the affected country.

However, there are situations and regions where self-help is perfectly appropriate and works well. In these situations, knowledge about improved building techniques can be transmitted (see also chapter 6). In the following, different self-help models are described, showing the implementation of reconstruction measures by personal contributions of the affected persons (disaster victims, refugees, displaced persons) with financial and technical support from national and international organisations. The nature and scope of the support and the technical advice through the project executing organisation (local authority) and the NGC, differ according to the type of the self-help model. Several types and combinations exist, resulting from the specific requirements on location.

5.2.2 Methodological approach

The methodological approach basically corresponds to the contractor models. Here, too,

1. the donor/financing agency defines its intended support, thus

2. enabling an expert group of the NGC to perform a situation analysis and a rapid assessment, which

3. result in an offer of the NGC, which incorporates an operational or implementation proposal. After

4. the commissioning of the NGC by the financing agency,

5. an implementation agreement is to be concluded between the NGC and the project executing organisation before

6. the implementation of the reconstruction measures can begin. Upon completion,

7. the acceptance procedures, handing-over, and, if necessary, aftercare take place.

The difference, however, lies in the fact that the target group is involved more intensively in the planning and implementation of the building works, and building contracts with contractors are concluded at best for partial works. It all depends on the type of self-help described in the following sections.

5.2.3 Aided individual family self-help

This concerns the reconstruction of damaged apartments or houses of individual families, which dispose of the required labour, but only of a limited amount of the required financial means and/or technical knowledge. Provided that they meet the conditions for support (see below: (1) Criteria for the eligibility for promotion) they are generally advised by the NGC or project executing organisation about the building measures to be implemented, especially with regard to:

- nature and scope of support,
- nature and scope of services to be provided,
- technical explanations of the building measures,
- procedure and duration of the measure,
- financing opportunities (subsidy, loan).

The scope of support and supply of building material is determined by a specification and bill of quantities drawn up beforehand by a local construction expert, contracted by the NGC, and only comprises those measures offering a minimum amount of living comfort (protection against cold, heat, rain, wind; inclusion of light and air; privacy), hygiene (minimum provision of washing facilities and toilet) and security (against destruction by natural disasters, against intruders, etc.). A time frame - as realistically estimated as possible - is given for this. All completion and extension works that go beyond this are to be carried out later by the families themselves at their own responsibility.

(1) Criteria of eligibility for promotion

- Proof has to be given that the family is the owner of the damaged house or damaged apartment.

- The family income has to be below a certain income level (defined by the local authorities).

- The family has to agree to contribute a minimum personal input to the reconstruction works (to be determined according to the project concept). Some special works (e.g. carpentry, sanitary, electrical works) can, if necessary, be contracted to professionals and special companies, which may also be appointed by the NGC or the executing organisation.

- They have to commit themselves to follow the instructions of the construction expert (or foreman) and to finish the works within the given period of time.

In case an appraisal of the project executing organisation reveals that it is qualified for the implementation of this service, it receives the required funds via a Financing Agreement from the NGC. Should the project executing organisation not be qualified, the NGC will take over these services.

(2) Tasks of the local project executing organisation

(2) Tasks of the local project executing organisation (municipality, building authority, coordination office for disaster aid measures):

- Drawing up of lists of beneficiaries.

- Appraisal of neediness as well as the beneficiaries' ability to provide self-help.

- Involving the target families in the planning of the construction measures.

- Selecting, contracting, and introducing local construction experts to appraise the construction damage and assess the required reconstruction measures.

- Instruction of the construction expert.

- Conclusion of the agreement with the beneficiaries on the implementation of self-help measures.

- Ordering the planning of the project (with special regard to structural security) as well as calculation of the material requirements.

- Procuring, storing, and distributing the required building material.

- Monitoring and overall supervision of the project procedures.

• Commercial controlling, i.e. for instance, settling accounts, keeping watch on the costs and budget.

(3) Tasks of the NGC

• Conclusion of the project agreement with the project executing organisation.

• Advising the local partners on the procedures when fixing criteria for the eligibility for promotion of beneficiaries, when drafting agreements with the beneficiaries, etc.

• Reporting to the financing agency.

5.2.4 Aided community self-help in housing construction

In order to be able to increase the self-help efficiency, several families (3 to 5) can join together and form a neighbourhood cooperation and repair or reconstruct their damaged apartments or houses by a joint building team consisting of members of affected families. The promotion criteria and the promotion procedure are basically the same as those of the aided individual family self-help. In this case, however, families are committed jointly.

Case study **J**

Aid for earthquake victims in Colombia

Financing agency:	**Federal Republic of Germany represented by BMZ**
Financing volume:	**1,073,700 euros**
Period:	**1999-2000**

On 25 January 1999 an earthquake of magnitude 6 on the Richter scale hit Columbia's coffee region. More than 200,000 people became homeless in the region around the city of Armenia. After the distribution of food and medicine and the provision of simple sanitary facilities in temporary shelters in the first days after the earthquake, the reconstruction of houses in different communities of the Department of Quindio, especially for the population groups of poor, landless coffee pickers, was identified as priority measure in the ongoing process. In the weeks to follow, 278 houses were built out of bamboo in several communities.

During the building conception, in cooperation with the University of Pereira, a new house type using locally grown bamboo had been developed, offering a higher resistance to earthquakes due to the special frame construction. The communities supported the building measure through the administration of material stocks and the mobilisation of the target group, while the coffee plantation owners provided material for the foundations as well as machines. The training of the target group further enabled a great share of self-help contribution and future income opportunities for trained people in the building sector, who benefited directly due to the great acceptance of the model. Even though the building measure was delayed as a result of the numerous economic problems of the households in providing at least one worker each, the first house was completed after 70 days. The low building costs due to the use of local material and the culturally adapted construction method led to the fact that the model was adopted by other aid organisations, still during the construction phase, and was also copied locally.

A total of 1,540 earthquake victims were accommodated in the 278 houses with the help of the reconstruction measures. Applying a mixed calculation results in accommodation costs of 697 euros per person, taking into consideration all emergency and accompanying measures, incidental expenses, and GTZ overheads.

The project is considered a successful example of development-oriented emergency aid, since on the one hand the project provided shelter for the victims, and, on the other hand, an innovative, adapted, and inexpensive building technique with a considerable multiplying effect had been successfully introduced. The efficient cooperation between the target group, communities, the association of coffee growers, and the University of Pereira contributed decisively to its success. Despite the heavy rainfalls during the building phase and delay in the provision of sites in areas less endangered by earthquakes, the earthquake victims were not provided with just emergency shelter, but instead with permanent accommodations within a reasonable period of time. This resulted in a boosting of the affected people's self-confidence in a great emergency situation.

Case study **K**

Support measures for the homeless in Freetown, Sierra Leone

Financing agency:	**Federal Republic of Germany, represented by BMZ**
Financing volume:	**690,700 euros**
Period:	**1999**

In January 1999, approx. 50,000 people in the eastern part of the capital of Freetown became homeless as a result of the fighting during the civil war in Sierra Leone. They had to find refuge within a short time in other parts of the city, which, however, could not absorb the crowds streaming in.

The reconstruction measures were executed by self-help or neighbourhood cooperation. The population was mobilised by the local reconstruction committees, which had also supported the assessment of damage before. Within the project, workshops were set up, where local craftsmen, having lost most of their tools during the civil war, manufactured doors and windows and received a basic set of tools as compensation after completion of the measure. The workshop operations were continued by the local people themselves after the building project was over. The work groups, organised by the neighbourhoods, built raw structures up to roof level in traditional earth construction. The plaster, a concrete floor, as well as roof substructure and covering were subsequently executed by local craftsmen. A local NGO coordinated and advised the reconstruction committees. In various sectors of the city, decentralised building yards for storing building materials, some of which being recovered from the ruins, were set up and run by the reconstruction committees. In the rainy season, tarpaulin sheds covered the building yards, which enabled the manufacturing of concrete blocks, even during the rains.

GTZ's contribution in addition to providing material support focused on the damage assessment and the participatory selection of building projects to be promoted. Afterwards, mainly organisational support and consultation of the reconstruction committee as well as the contracted NGOs were rendered.

Between May and December 1999, shelters for 1,800 families (approx. 10,500 people), as well as 12 schools for 5,000 pupils, a health care centre, and a maternity clinic were set up within the framework of the project. The costs of the project measures carried out by GTZ amounted to 690,700 euros. Including the costs of the community buildings, incidental costs, and GTZ overheads, this results in accommodation costs of 66 euros per person. Part of the building material (corrugated iron, building timber, cement), as well as foodstuffs for "Food for Work" measures were provided by CARE, CRS and UNDP/UNOPS and are not included in the accommodation costs.

The project is to be considered especially successful since a contribution to ease the crisis situation in the capital could be made with little effort but high personal contributions. Additionally, the local building industry was given the chance of a new beginning. The efficient and smooth cooperation between the different aid organisations enabled a rapid and in all cost efficient realisation of the project. The good cooperation with the authorities as well enabled a quick resumption of school and health care services. Furthermore, the reconstruction committee's ability to organise and act was strengthened and is still being used for other tasks.

In general, the aim is to unite families into one group within a neighbourhood, in order to strengthen the community spirit and to keep distances short. The nature of construction works on apartments or houses should also be similar, in order to ensure that the work to be done is more or less the same for each family. In order to make sure that families, whose houses are completed first, do not reduce their share of participation in the community self-help scheme, or even back out entirely, it is important that the work procedures be organised such that all accommodations are completed simultaneously. Therefore, for example, all foundations should be produced successively, followed by all masonry works, installation of windows and doors, all plastering works, all paintworks, etc. This enjoys the additional advantage of greater efficiency in work performance, as well as a more effective use of equipment and materials.

The local project executing organisation's task here is to provide support and supervise the works through a building expert, as well as to procure, store, and distribute the required material. In case a Financing Agreement is not possible, the NGC advises the project executing organisation and, above all, takes over the commercial controlling.

5.2.5 Aided community self-help in the construction of community facilities

Aided community self-help has also proved to be successful in the field of rehabilitation and reconstruction of buildings of social infrastructure, e.g. schools. Here, the procedures can be as follows:

- The construction department of the school authority or the building authority, possibly in cooperation with private architects and engineers, takes over responsibility for planning, calculation, material lists, site supervision, and approval.

- Each school forms a school development society, consisting of teachers and parents, who determine the conception of the measures and provide personal inputs in the form of material supply, manual work, and, if necessary, financial contributions. Experience has shown that these personal contributions constitute between 10% and 30% of the total building costs. The balance is covered by the NGC. The school development society assumes the role of the client and concludes contracts with craftsmen, advised by the school authority's construction department or the building authority, which also determines the craftsmen's wages and sets upper limits for other costs. Those costs are fixed at market rates. Should resources become scarce during implementation, some of the works will have to be cancelled. In case the school development society has worked economically and financial means remain, it can additionally invest these in construction or in other pending school projects.

- The NGC concludes an agreement with each school development society, procures the building material free on site, takes care of the administrative, commercial, and technical supervision, and finances the measures. The NGC also finances the private architects and engineers, who support the building authority or the building department of the school authority.

The model can also be applied to community centres and other small measures, e.g. school furniture, toilet construction. The procedures are generally the same as described above.

5.2.6 Other self-help models

A rarer version of the self-help model is the building of new houses on new sites. This occurs when the authorities provide land for the beneficiaries to build on by themselves. Architects and engineers draw up the plans of settlements and the house types, on commission by the local executing organisation. The site development as well is carried out by specialist companies, while the actual building of the house is left to the settlers. The NGC procures the building material free on site, takes care of the administrative, commercial, and technical supervision and finances the measures. The services of all parties involved have to be settled by contract.

For the individual families it is almost impossible to build their own house without help from outside. Together with other families, however, the house can be built rapidly and efficiently. In this case, the community self-help described above, which incorporates technical assistance by a local building expert, is an ideal implementation model. Here it is also important to complete the individual houses of a neighbourhood building team almost simultaneously. In order to make sure that all buildings are completed in the same standard and that none of the involved families is privileged in the allocation of houses, these are assigned after completion of all building works by casting lots.

The nucleus model for rehabilitating private houses is a special form of self-help, which occurs after the core ("nucleus") of the beneficiary's house is constructed as a stimulus by a building company, commissioned by the executing organisation according to the NGC's instructions. Usually, this nucleus consists of one living room with a roof, windows and doors, as well as the most important sanitary facilities and energy supply. The beneficiary family completes the building. This model is described in section 5.1.5.2 (3).

The building yard model described under 5.3 is a special form of all models mentioned before. It envisages the establishment of a large warehouse for building material (sometimes technical equipment as well) and has proved successful in situations when building material is rarely available or only at excessive prices on the open market. By bulk purchases and import of building material and equipment through foreign aid organisations, people intending to build can purchase the material considerably cheaper. The building yards dispose of specialised personnel offering advice and help to potential builders. In some cases, the building yards have sample houses on display and also offer training courses.

5.3 Building yard model

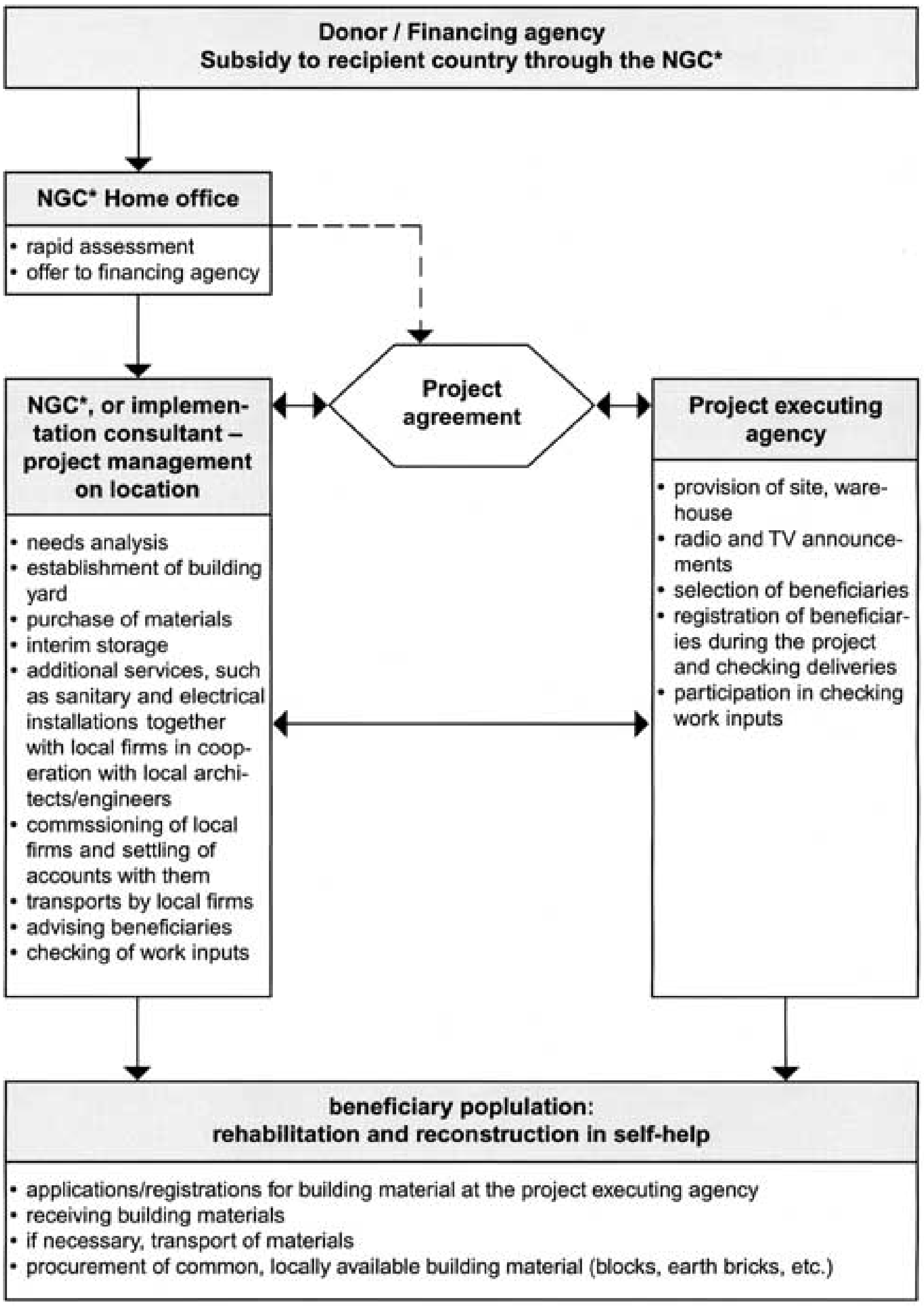

* NGC = non-commercial general contractor

5.3 Building yard model

(1) Aim of the model

There are several so-called building yard models for the coverage of material requirements and reconstruction after disasters satisfying varying requirements. The purpose and philosophy of the building yard model described here is to support the needy native population in rural regions and in the suburban areas in the reconstruction of their destroyed houses and apartments after natural disasters or impacts of war.

First of all, it is a matter of providing a minimum of essential basic building material as fast as possible to give the people at least a simple “roof over their heads” or to “winterise” their partly destroyed houses. The works are mainly executed by personal labour inputs of the affected family or by neighbourhood cooperation. The individual building concept has to be oriented towards the skills of the affected people, which normally means only simple repair works.

This model can also be applied for the new construction of simple dwelling houses.

(2) Project executing organisation and beneficiaries

Even for the concept of a building yard model, a written project agreement has to be concluded with the local project executing agency, listing the rights and obligations of both parties. Assisting services of the executing agency could be the provision of a site free of charge and a warehouse or industrial hall as building yard store, saving the financing agency some money. The funds saved would be available for additional supply of material.

The choice of beneficiaries who should receive building material and support has to be made either by the executing organisation or someone appointed by them. This cannot be a duty of the building yard management. They should, however, be involved in the determination of the selection criteria as well as observe the operations and report supposed and major irregularities to the financing agency through the NGC.

The project executing organisation has to inform the population, for example, via radio, television or a notice at the community authorities, about the supporting measures and conduct or delegate the registration, while maintaining full responsibility. Furthermore, it also has to assign personnel, which later on, during the distribution of building material and provision of other services, has to get the beneficiaries’ confirmation of receipt of the goods or services. This personnel becomes a part of the building yard team and also has an office there.

(3) Building material

What is to be understood by basic building material depends on the situation in the country, the degree of destruction of the houses and the common material and technologies of the particular country. This is to be investigated in advance. In the beginning, it mainly concerns roof-covering material (possibly temporary covering), bricks, lime and cement, construction timber and reinforced plastic sheets for the temporary closing of window openings. Since in most cases the material resources in the affected countries run out fast, the building material is specified by the NGC and, after invitation of tenders, obtained from bordering countries or other regions, and then temporarily stored in the building yard. Here, experienced purchasing agents of the NGC with international experience are required. Amongst others, the following tasks are involved:

- Procurement of building material (invitation of tenders, purchase, cost management, accounts, organisational control, i.e. observation of delivery and payment delays);

- Organisation, implementation, monitoring (personnel and material) and accounting of transportation.

It is worth considering providing material allotments, so-called “material kits”, of equal size per family/household, in order to maintain equality and ensure that no envy arises. Occasionally, larger allotments may be supplied, provided that it concerns larger families and greater destruction. A transparent management of the allotments is essential.

It is a declared aim of the relief actions not to create business competition with the country’s building material suppliers, as far as such traders exist and are sure to supply the required quantity fast and at fair prices. With increasing alleviation of the most urgent needs, the building yard's function is gradually reduced.

In the course of the situation analysis or rapid assessment, when the establishment of a building yard becomes apparent, a first rough list of material required and cost estimate have to be drawn up by the appraiser after an estimated damage analysis. This cost estimate is a constituent for the formulation of the budget and offer to the donor/financing agency.

(4) Extended scope of services

Supplementary to the basic building material, the provision of simple house installations, e.g. electrical installations and sanitary units can also be included in the programme of the building yard, as far as this standard is found essential and cannot be provided by the target group. The building yard's management, however, will not procure and store installation units of its own, but will cooperate with the local building industry (installation companies) and subcontract these services completely to them. The advantage is that the standards and materials applied are those common on the local market, and can easily be repaired or augmented later on. One or more local engineers or an engineering office should be employed by the NGC to carry out investigations on the partly destroyed houses and to formulate the specifications and description of services, on the basis of which the local installation companies can submit their offers.

The disadvantage of taking over such extended services is that the building yard management neither has an influence, nor wants to exert it on the performance of personal contributions of the house owners, and thus the interfaces between the services of the installation companies and those of the self-help groups are hard to coordinate. Significant delays and possible material losses can occur. It is, however, the declared goal of the NGC not to assume the role of a contractor in the building yard model, who is in charge of the completion of the houses and is judged accordingly. The NGC supplies and distributes building material and supports the beneficiaries, if necessary also with the help of installation companies that are contracted, whose services are checked and then paid. The coordination and completion, however, lies in the hands of the house owners. In case serious problems arise within these extended services, they should be called off. For such cases there are other models, presented as contractor models in the above section 5.1.5.2 "Rehabilitation of houses destroyed by war", for which the NGC takes over total responsibility.

Provided the market does not already offer these products, an extension of the scope of services can be, for example, the import and distribution of simple small windows and doors, preferably in wooden constructions, adapted to the country's standard. Furthermore, standardised, insulated lightweight roofing elements in the form of panels can be imported to replace the destroyed traditional roof constructions made of wood and mud, for example in arid rural zones. The house owners themselves can install them.

Another viable option is the import of large quantities of seasoned sawn timber for the construction of windows and doors on location in the affected country, in case there is a shortage (for example, in Afghanistan). This way, the manufacture of complete windows and doors could be arranged with local carpenters upon provision of sawn timber, which would then be distributed by the building yard.

(5) Technical prerequisite of the building yard

Depending on the estimated budget an appropriate building or rather a warehouse should be made available, if not provided free of charge by the project executing organisation, then on a rental basis by the building yard management. Possibly a partly destroyed hall can be repaired for this purpose. The site must have a connection to the public road networks, suitable for heavy vehicles. The site has to be lockable (fence). In case no hall is available, a roofed area has to be built for material requiring protection. Office space has to be provided for the building yard management. The building has to have or receive power connections, including three phase supply (380 V). The establishment of workshops or the acquiring of special machines and vehicles (other than a forklift) is not required. These are to be rented, if necessary.

(6) Building material distribution

The distribution of building material is one of the most difficult work steps. It should first of all be ensured that the material procured by the NGC from within the country or neighbouring countries, as well as that imported from overseas, will be supplied free on building yard and stored there.

Case study **L**

Rehabilitation of schools and housing for returning refugees in Jaffna, Sri Lanka

Financing agency:	**Federal Republic of Germany represented by BMZ within the framework of TC and the KfW within the framework of commodity aid**
Financing volume:	**3,683,700 euros**
Period:	**1996-2003**

Since 1983 Sri Lanka has been marked by ethnic conflicts, which led to a civil war still ongoing in spring 2002. In April 2002 a cease-fire was declared and negotiations are being held since. In the whole country, approx. 530,000 families, mainly Tamils, were forced to flee. The war between the Sri Lankan army and the Tamil rebel group LTTE (Liberation Tigers of Tamil Eelam) in the Jaffna district, had led to considerable destruction of infrastructure and to the flight of almost half of the population of the Jaffna province during the years 1995/96. Until spring 2002 it was reduced to 450,000 people.

Already at the end of 1996, BMZ decided to support the government of Sri Lanka in the reconstruction of Jaffna and the repatriation of refugees, and charged GTZ with the implementation. The “Jaffna Rehabilitation Project” (JRP) was created. The KfW granted financial aid in the form of so-called commodity aid, which was carried out by GTZ. The “Resettlement and Rehabilitation Authority of the North” (RRAN) is the counterpart institution in coordination with the “Government Agent” (GA).

The main activities of JRP are:

- rehabilitation of the drinking-water supply in the city of Jaffa and the whole region,
- rehabilitation or reconstruction and furnishing of schools,
- reconstruction of houses,
- operation of a central building yard for the supply and distribution of material,
- promotion of small enterprises (production of micro-concrete roof tiles).

The central building yard is the project’s coordination point. The housing construction is generally carried out by the families themselves, the construction or rehabilitation of schools by so-called “School Development Societies” (SDS), i.e. teacher-parents-interest groups. The building yard provides the building material, which is mainly procured from Colombo. Building experts of the “School Works Branch” (Department of Construction of the Ministry of Education) control and advise on construction-related issues with the support of private architects. The GTZ experts advise and coordinate.

At the end of 2002 the project implementation still continued. It will end in 2003. Until now the following building works were implemented:

• rehabilitation of buildings and reconstruction of a total of 24 schools	1,063,400	euros
• supply of furniture for a total of 24 schools	63,900	euros
• construction of school toilets for a total of 230 schools	814,700	euros
• erection of 1,000 housing units	1,677,000	euros

• setting up and operation of 1 central building yard	64,700	euros
The total costs for all building construction measures so far amount to	3,683,700	euros

The aim should be to have the beneficiaries pick up the building material, which is generally provided free of charge, at the building yard and thus have them arrange for the transport by themselves and at their own expense. In the building yard it will be registered and confirmed by the recipient which family from which village has received what kind of material for which house. These registrations and confirmations are incumbent upon the local administration or project executing organisation (also refer to item (2)).

If, after a thorough appraisal through representatives of the project executing organisation, it can be confirmed that beneficiaries are not in the position to organise and pay for the transport, then the building yard management can be charged with it. For that purpose, cooperation with local transport companies should be arranged. Together with them, a system of loading schedule, distribution, and confirmation of receipt should be elaborated, according to which distribution and billing is effected on behalf and at the expense of the NGC. This system requires the executing organisation to be included in the control and confirmation. Building up their own fleet of vehicles is only necessary when the market does not offer this service, which should rarely be the case. In general, it is uneconomic to have one's own vehicle fleet, as it is inflexible in usage, expensive to operate, and is difficult to manage with regard to repair works and spare parts. Just a small lorry should be available for special requirements.

(7) The building yard team

Personnel (example):

The quantity and quality of personnel depends on the concept and nature of service to be provided by the building yard. It influences the decision as to which personnel is to be seconded or whether qualified personnel can be recruited on location. Should the NGC, for example, already dispose of an office there, then this can possibly take over various functions (e.g. commercial activities, secretarial work, and the like). Consequently the personnel is to be composed individually. Required are:

- 1 building yard manager (technical background);
- 1 assistant manager (as deputy) (technical or commercial background);
- 2 local persons (building technology experts) for the management of the "extended services", in accordance with the above section 5.3 (4); person(s), who can also be allocated by a local engineering office;
- 1-2 interpreters, depending on the local technicians' language knowledge;
- 1 forklift driver (if required);
- 2-3 drivers (for cars and for small lorries);
- 10 - 20 warehouse workers;
- at least 2 local counterparts, in charge of tasks such as those described in section 5.3 (2), "Project executing organisation and beneficiaries".

Equipment (example):

- office equipment, as far as possible incl. computers, e-mail, telephone and fax machine;
- satellite telephone, if required;
- 2 - 3 cars, if possible all-terrain vehicles;
- 1 small lorry, approx. 3-5 tonnes (if required);
- 1 forklift (if required);
- general tools for warehouse workers.

Costs for accommodation and expenses.

5.4 Special projects

GTZ is one of the largest public service companies worldwide in the field of development cooperation, disposing of decades of experience. With the help of its qualified staff, which is familiar with the social, economic, political, and cultural conditions of its partner countries, it is in the position to execute complex special projects concerning many sectors, for national authorities, and international clients and institutions. The support of the Emergency Loya Jirga in Kabul, Afghanistan, which took place from 11 to 19 June 2002, will be presented in the following case study.

Case study **M**

Support of the Emergency Loya Jirga in Kabul, Afghanistan, from 11 to 19 June 2002

Financing agency: **UNDP (United Nations Development Programme)**
Financing volume: **8,100,000 US $**
Period: **2002**

At the beginning of April 2002, GTZ received a commission from UNDP to technically renew the buildings of the partly destroyed technical college in Kabul as well as the 33.6 ha large site on which it is situated, in the extremely short period of time until 10 June 2002 (10 weeks), to conduct the elections of the head of state and the most important members of the Afghan interim government, and to ensure the organisation of the event. A total of 1,685 delegates, among them approx. 185 women and 1,676 persons for service, organisation and security, were to be accommodated on the site (delegates in the buildings, personnel partly in tents).

The implementation of the works was performed in close cooperation with the Afghan Loya Jirga Commission, UNAMA (United Nations Assistance Mission for Afghanistan), ISAF (International Security Assistance Force) concerning security aspects and a number of Afghan, German and international companies for the construction works and the organisation of the conference.

In addition to the logistic requirements (e.g. conference technology, information and communication, security, registration, catering, equipment and accommodation, supply, transportation and health care) and the conference management (e.g. care of the participants, questions concerning protocol, press and public relations, information and communication, recruiting and training of personnel), the building works for a temporary restoration of the existing buildings and the creating of a new, separate conference area (conference tent of 2,800 m^2 and various tents for meetings, VIPs and conference management) and a temporary technical infrastructure (water supply, 200 toilets, 3,000 m illuminated security fences equipped with watch towers, supply of electricity and complete lighting of the buildings and the site) constituted the outstanding services. A total of 5 Antonov freight planes brought, for example, conference tents and conference equipment from Germany.

All in all, 27,480 m^2 of building area were rehabilitated for temporary use (hostels, dining hall, multipurpose hall, service buildings) and a temporary traditional large kitchen of 1,000 m^2, with a capacity of approx. 9,000 meals per day, was set up. In addition to that, 14 temporary structures with toilet and washing facilities having a total area of 2,240 m^2 were set up, and the outdoor areas, such as roads, paths and gardens, were prepared.

On 8 June 2002, the completed facilities were punctually handed over to the Afghan Loya Jirga Commission.

6. Basic planning criteria for simple buildings worldwide

6.1 General

The construction of buildings within disaster relief measures does not differ from building in normal situations, as long as these are not temporary buildings and emergency accommodations. The planning and realisation of dwellings must always take the following factors into consideration:

- Economic aspects
- Socio-cultural aspects
- Ecological aspects
- The climatic conditions
- Protective measures against natural hazards

Taking all the factors into consideration can in some cases lead to contradicting planning requirements. This is particularly true in the case of emergency housing, which calls for compromises on account of time and cost restraints.

6.2 Economic aspects

The need to restore living space is usually high when the number of people rendered homeless due to expulsion or destruction of houses is high. In general, the greater part of reconstruction of living space is carried out by the affected people themselves with their own resources and in self-help, partly supported by grants and special credit programmes on a national level.

The provision of housing within the framework of technical cooperation constitutes a relatively large individual promotion on account of the high cost per beneficiary. That is why such aid can generally reach only a small number of the needy.

The key indicator for the cost efficiency of building measures is the resulting cost per accommodated family or person. The costs of building measures vary considerably on a global scale, on the one hand due to the method of construction, but also due to the extreme variations in the costs of building materials, transports, wages and other influencing factors, e.g. political ones.

Apart from the cost effectiveness in the narrower sense, the economic analysis must also consider other economic benefits of the affected population: these include the reduction of risk of destruction of dwelling space due to disaster resistant constructions in future local projects, or even the model effect for future building technologies in the country as a whole. In the process, the building costs may increase only marginally, while the costs of transferring of new technologies, knowledge and skills also have to be taken into account. Moreover, it is important to conduct a comparative evaluation of the long term economic advantages for the present and future users of buildings with normal life spans compared to temporarily used buildings.

It is possible to influence the costs through the choice of models: it cannot be assumed that self-help models are principally more economic than contractor models, because a higher degree of support and longer duration of self-help projects have to be taken into account. When especially needy groups are being supported, it is usually not possible to expect personal inputs from them which will significantly reduce the total construction costs.

In order to serve as large a number of people in need of housing as economically as possible, the rehabilitation of living space in private houses or in hotels offer particularly suitable alternatives, as the costs are generally lower than those of new constructions. When rehabilitating private houses, the economic benefit is also distributed amongst the host population, in the case of public buildings the host communities get the benefit.

The nucleus model can lead to a reduction of costs per user, because within a short time only the most important building parts are constructed, and the rest of the building works is carried out without external assistance. The building yard model can also be comparatively cost-efficient, depending on its application, as it mainly deals with material aid.

Temporary shelter is usually cheaper and quicker to produce, but of less advantage with regard to the local economic development and sustainability. The cost benefit, however, is limited by the fact that mainly external resources have to be used (import of prefabricated building components and production by international construction companies).

The establishment of new housing settlements is generally cost intensive and constitutes a severe intervention, which is economically justified only in cases where the utilisation of safer sites leads to a significant reduction of disaster risk.

In general the cost effectiveness of a model has to be weighed against several other factors, and the feasibility of each model has to be ensured under the special emergency conditions and in the specific local context, otherwise the ultimate success of the project will be at stake.

Apart from the choice of models of implementation, the planning criteria for simple buildings can each be analysed in terms of cost considerations. It would be ideal to apply as many as possible of the criteria listed in this chapter when designing buildings, but since the financial means are usually very limited, the costs incurred rarely permit the application of all the required measures. That is why the application of economical construction methods is of particular importance. The costs can usually be reduced by the following aspects:

- Utilisation of locally proven building materials and technologies (Local building traditions are usually the most economical; they use abundantly available and inexpensive building materials, which can be supplied without delay; they utilise common local handicrafts and materials available on the local market, and thus ensure easy repairs and repetitions at relatively low cost).

- Building without heavy equipment (While a high degree of mechanisation of building measures is common in industrialised countries and generally more cost effective, in poorer countries it is often not possible and considerably more expensive than manpower; moreover breakdowns can occur, causing expensive and lengthy repairs, and problems can arise during transports).

- Design concepts using lightweight building elements (They simplify transports and assembly, and are therefore cheaper and more easy to realise in remote locations).

- Economical building design (Simple compact forms reduce the ratio of wall surface to usable floor area; by combining several building units, walls can be used jointly; internal partitions can be achieved by room-high wardrobes and curtains, etc.).

- Phasing of building works (Not everything needs to be built at once, a core (nucleus) of 1 to 2 rooms with cooking area and sanitary facilities can be sufficient at the beginning, while plans exist for the extension of the house - horizontally and/or vertically - as the requirement may be).

6.3 Socio-cultural aspects

In order to ensure the success of the project it is important to take the special living conditions of the target group into consideration when planning. That is why it is important to acquire information on the local building methods and involve local professionals in the development of the concept.

The following are some of the aspects to be taken into account during planning:

- Habits, traditions, religious requirements (Are large families with three generations under one roof common? Is the spatial separation of adult men and women strictly practiced? Are bunk beds acceptable? Are toilets acceptable within the living area? Is it necessary to make sure that the toilets are not oriented towards Mecca?).

- Use of the building (Is much space needed for social contacts, e.g. a large living room or roofed outer space, or is the life style more introverted, e.g. with an internal courtyard? Is outdoor sleeping favoured, e.g. on the roof? Is the keeping of livestock or pets important?).

- Security requirements (Do burglaries occur frequently? Do wild animals represent a danger? Is there a danger of social or ethnic conflicts arising in the neighbourhood?).

- Aesthetic values (Are there forms, materials or colours that are preferred or rejected? How important is it for the occupants to be personally involved in the design and decoration? How much can be left to them?).

6.4 Ecological aspects

Ecological building is relatively unknown in many countries, which is why reconstruction projects often provide a good opportunity to incorporate ecological aspects in the design and make the target groups aware of them, provided that the preconditions (funds, products, acceptance) exist. There are numerous ecological design criteria, here are the most important ones:

- Utilisation of local abundantly available materials (which can vary considerably according to the geographical conditions and regional industry. Ecological aspects are the conservation of limited resources, the avoidance of imports and long distance transports, as well as fostering the local industry. Quite often local materials, e.g. clayey soil, exist in unlimited supply, or e.g. bamboo, are quickly regenerated).

- Use of materials which are produced with low energy inputs (meaning less emission of pollutants) (burnt clay bricks require more energy for their production than e.g. concrete hollow blocks; sand lime bricks require even less).

- Avoidance of materials and methods that are dangerous to health (best known example is asbestos cement - to be avoided at all costs - also various wood preservatives, solvents, phosphogypsum, etc. - an environmental expert should always be consulted).

- Utilisation of regenerative resources (e.g. rainwater collection from the roof; composting of kitchen waste; solar energy for water heating and power generation; wind energy for pumping water - however, solar and wind technologies can be expensive to procure).

6.5 The climatic conditions

In order to clarify their climatic differences, the inhabited regions of the earth are roughly divided into the following 5 climatic zones, giving brief information on the corresponding building design requirements:

a. warm humid climate with temperature and humidity levels in the upper limits of the comfort zone (e.g. above 30°C with relative humidity above 50 %), limited cooling at nights and considerable rainfall; building design requirements: **light, non-heat-retaining construction, good cross-ventilation, i.e. large openings.**

b. hot dry climate with extremely high maximum temperatures (often exceeding 35°C) and large drop in night temperatures (to below 15°C), low relative humidity, scarce rainfall, but occasional sand and dust storms; building design requirements: **heavy, heat retaining construction with dissipation of heat during the night, small openings at higher levels.**

c. tropical composite climate with tendencies either to warm humid or hot dry climatic features; building design requirements: **partly heat retaining constructions, in all other points compromises between warm humid and hot dry building design.**

d. tropical highland climate with strong solar radiation, large temperature fluctuations, cold winds and possibility of development of dew; building design requirements: **similar to composite climate, but in addition with heating facilities.**

e. temperate climate with large seasonal temperature fluctuations and extremely cold winters; building design requirements: **heat retaining constructions with moisture barriers and heat insulation, as well as additional heating facilities.**

6.6 Protective measures against natural hazards

6.6.1 Earthquakes

• Provided there is an option, avoidance of sites on or near slopes (danger of landslides, avalanches) and coastal sites (danger of tidal waves), sufficient distance from neighbouring buildings (danger of collapse), especially in the main wind direction (danger of flashing over of fire), and downstream from dams (danger of dam burst), no constructions within the area of collapse of bridges.

• As far as possible, rigid ground conditions (preferably rock), because earthquakes can lead to the liquidation of the soil and thus deprive the foundations of its support; filled up ditches and river beds are especially to be avoided.

• Symmetrical shapes of buildings (no L-, T- or U-shapes), also, as far as possible, symmetrical arrangement of rooms.

• Design of foundations such that they offer no impact surfaces for seismic forces, i.e. avoidance of different heights of strip foundations, no stepping of foundations on slopes. In smaller buildings: reinforced, sufficiently dimensioned slab foundation, preferably with a vertical strip along the edge, provides highest earthquake resistance. Reinforcement, slab thickness and concrete quality have to be based on structural calculations. For larger buildings it is essential to involve an experienced structural engineer.

• In the case of small buildings, light construction, in order to avoid major damage by falling debris, as well as strong connections between building components. At corners (and also around larger openings) installation of sufficiently dimensioned reinforced concrete or timber elements. A continuous ring beam above the doors and windows, and firmly fixed to the walls and corner posts is absolutely essential.

• It is also essential to involve an experienced structural engineer in the case of larger buildings (two-storeyed and higher). Projections (both horizontal and vertical) should be avoided, unavoidable projections have to be especially well fixed to the main structure.

• Windows and doors should not be placed at corners of buildings (as they reduce the building's stability and thus represent an earthquake hazard). In the case of glass breakage, it is easier and cheaper to replace smaller panes.

• Water tanks on the roof have to be especially well constructed, in order to avoid collapse during an earthquake. Better: free-standing water tanks with especially strong supporting structure.

• Regular control of the strength of structurally important building components and connections (because of the danger of weakening of material due to corrosion, termite attack, decay, etc.).

6.6.2 Hurricanes

• Avoidance of constructions on exposed sites without protective vegetation or dense building clusters, avoidance of flood prone locations (lowlands, vicinity of rivers).

• Roof slopes at least 30°, to reduce suction forces (suction is highest at 10°). Strong connections of all roof components to the roof structure, but danger of rusting of all iron parts must be taken into consideration.

• Avoidance of large roof overhangs and projections, because of danger of lift-off. On the other hand, heavy rains may make large overhangs necessary. Therefore, predetermined breaking points along the line between roof and wall can be a solution.

• Strong wind bracing in roof and walls, otherwise principally the same structural precautionary measures as for earthquakes.

• Wind protection through vegetation, but also precautions to be taken, so that trees cannot fall on the house.

6.6.3 Fire

• The use of fire resisting materials should be first priority.

• Chemical treatment of building parts, but only as emergency solution, because regular renewal is necessary and washed out impregnating chemicals can be toxic.

• Provision of fire fighting equipment and reservoirs for adequate water supplies.

6.6.4 Solar radiation, intense heat

• Shading by means of roof overhangs or individual elements above or in front of windows.

• Ideally, complete shading of facade, to avoid overheating. Alternatively the outer walls can be double-layered with a naturally ventilated air cavity (i.e. with openings above and below) - thereby enabling the heat that penetrates the outer skin to be dissipated by the natural ventilation in the cavity, thus preventing the inner layer from heating up. A reflective treatment of the façade can keep out most of the heat, while an aluminium foil covering the outer surface of the inner layer provides an additional barrier against heat penetration into the building.

• In hot dry areas, thick, heat retaining outer walls prevent the quick penetration of solar heat. They should be dimensioned such that the heat reaches the interior in the evening, when the air temperature falls below the comfort level - in this way, comfortable room temperatures are achieved day and night without technical means (air-conditioners, heaters). A suitable wall thickness cannot be recommended as it depends on the heat retaining features of the wall construction material, the construction system, the surface texture and colour, as well as on the prevailing day and night temperatures. With the corresponding information, a building physicist can calculate the required wall thickness.

• Vegetation can provide shade and minimise glare. Especially in hot dry areas, avoidance of light coloured, smooth ground cover (glare and heat reflection).

6.6.5 Extreme cold and snow

• Foundations must be below frost level, otherwise there is a danger of building components being lifted up when ice develops.

• The complete outer skin (wall and roof) must be clad by a thick heat insulating layer, in order to prevent the loss of heat from inside the building. As far as possible, the heat retaining wall should be on the inner side, so that the heat stored in it can be returned to the interior. The heat insulation must be protected externally against moisture and mechanical damage (e.g. by a layer of plaster, wooden cladding, etc.).

• The roof construction must take the expected snow loads into consideration, good drainage must ensure the quick removal of melting snow and ice.

• The windows should be double glazed, doors and windows must close tightly in order to prevent heat loss. They must, however, able to be opened so that the humidity that develops inside is allowed to escape (important to prevent the development of fungus and rot). Wind traps should be designed at entrances.

• Sufficient heating facilities (depending on availability, using oil, gas, coal, electricity) have to be incorporated in the design, corresponding spaces for reserve supplies (oil, coal, firewood), chimneys/exhaust pipes (oil, gas coal), or sufficient electricity must be provided.

6.6.6 Rain

• Avoidance of flood prone locations (lowlands, vicinity of rivers).

• Sloping roofs, roof overhangs sufficient to protect windows and outer doors.

• Since tropical rains are particularly heavy, sound proofing of the roof is important, e.g. by fixing insulating panels directly below the roof elements, by an air space between the ceiling and roof, by fixing felt or rubber washers at connection points, and so on.

• Avoidance of internal drainage and roof valleys, as gutters can get blocked by leaves and dirt and prevent drainage of water. Site drainage must function particularly well.

• Floors must be higher than the outdoor area in order to prevent water from entering the building.

• Recommendation: dark paint at plinth level, at least 30 cm high (above outdoor ground surface), in order to avoid ugly stains of splashing water.

6.6.7 Sand

- Smooth outer surfaces of buildings, no horizontal projections or recesses, in order to avoid sand deposits.

- Protective walls up to or window openings above 1.60 m, since wind carried sand rarely reaches higher levels. Dust, on the other hand, cannot be excluded.

- Soft ground surfaces close to the house, as well as bushes and trees, in order to check wind carried sand.

6.6.8 Termites

- Use of termite resistant building materials (only resistant timber or no timber at all).

- Impregnation of wooden parts, but beware of exposed surfaces (danger of poisoning through direct contact). Preferably only structurally important parts should be impregnated, which are subsequently concealed by other materials or by a non-toxic paint.

- Metal termite shields fixed at all places accessible from the ground - e.g. along the top edge of the plinth - actually mainly for inspections, so that the development of termite tunnels is quickly identified and protective measures can be implemented. Impregnation of the ground around the house is practiced occasionally, but is not advisable, because of the health hazards to humans and domestic animals.

6.6.9 Fungus

- Maintenance of dry conditions by means of ventilation and keeping a good distance from ground moisture.

- Use of dry, fungus-proof timber or building materials that do not absorb moisture.

- Protective paints, e.g. milk of cement or lime, non-oil-based glue paint, using a fungicide as primer.

7. Bibliography

7.1 General Literature

1. Davis, Ian: **Shelter After Disaster,** Oxford Polytechnic Press, Oxford, 1978

2. Davis, Jan; Lambert, Robert: **Engineering in Emergencies - A Practical Guide for Relief Workers,** (2nd Edition), RedR International, Geneva, 2002

3. IFRC: **World Disasters Report 2002,** International Federation of Red Cross and Red Cresent Societies, Geneva, (Websites: www.kpbooks.com, and www.eurospan.co.uk), 2002

4. Kreimer, Alcira, et. al.: **The World Bank's Experience with Post-Conflict Reconstruction,** World Bank Group, Washington D.C., 1998

5. Manfield, Peter: **Emergency Shelter for Humanitarian Relief in Cold Climates: Policy and Praxis,** ReliefWeb Humanitarian Library (Website: www.reliefweb.int/), 2001

6. The Sphere Project: **The Sphere Handbook - The Humanitarian Charter and Minimum Standards in Disaster Response,** IFRC Geneva, Oxfam Publications, Oxford, 2000

7. UNDRO: **Shelter After Disaster,** Office of the United Nations Disaster Relief Co-ordinator, Geneva/New York, 1982

8. USAID: **Mitigation Practitioner's Handbook,** US Agency for International Development, Washington D.C., 1998

7.2 GTZ Publications

9. GTZ: **Development-oriented Emergency Aid (DEA) - GTZ's working principles,**

Deutsche Gesellschaft für Technische Zusammenarbeit (GTZ) GmbH, Eschborn, 1998

10. GTZ (Abteilung 4300): **Entwicklungsorientierte Nothilfe (EON) - Flüchtlings-programme,** Deutsche Gesellschaft für Technische Zusammenarbeit (GTZ) GmbH, Eschborn, 2001

11. GTZ (Abteilung 4300): **Katastrophenvorsorge - Arbeitskonzept,** Deutsche Gesellschaft für Technische Zusammenarbeit (GTZ) GmbH, Eschborn, 2001

12. GTZ (Division 4300): **Disaster Risk Management - Working Concept,** Deutsche Gesellschaft für Technische Zusammenarbeit (GTZ) GmbH, Eschborn, 2002

8. GTZ building projects within the framework of DEA

Year	Project	Client	Contract sum in million euros
1992-1993	Refugee settlements, building rehabilitation and extension as humanitarian aid in Croatia	AA	25.565
1993-1996	Construction of refugee settlements in Azerbaijan	ECHO	16.600
1996-2003	Rehabilitation of schools and housing for returning refugees in Jaffna, Sri Lanka	BMZ	3.684
1995-1997	Rehabilitation of housing and schools in Tuzla Canton, Bosnia & Herzegovina	AA	6.698
1997-1998	Restoration and reconstruction of war damaged buildings in the Fizuli Region in Azerbaijan	ECHO	2.090
1998	Construction of new housing for refugees returning to Gradacac/Modrica, Bosnia & Herzegovina	Düren City, EU, BMZ	1.253
1998	Reconstruction after earthquake in Southern Turkey	BMZ	1.030
1998-1999	Provision of accommodations for refugees from Kosovo in Albania	BMZ	2.556
1999	Wiederaufbaumaßnahmen in Freetown/Sierra Leone	BMZ	0.691
1999-2000	Emergency aid and reconstruction measures after earthquake in Colombia	BMZ	1.074
1999-2000	Housing and social facilities for earthquake victims in Western Turkey	BMZ	12.017
2000-2001	Rehabilitation of schools after floods in Cambodia	BMZ	0.375
2000-2001	Provision of housing for Afghan refugees in Pakistan	BMZ	0.740
2000	Reconstruction measures after floods in Venezuela	BMZ	1.020
2001	Reconstruction of housing after earthquake in Peru	BMZ	1.020
2001 - 2002	Reconstruction of housing after earthquake in El Salvador	BMZ	1.834
2001 - 2003	Reconstruction of a school after earthquake n Gujarat/India	Bild-Hilft e.V.	0.880
2002-2003	Emergency aid and reconstruction measures in Afghanistan	BMZ	7.050
2002	Support of the Emergency Loya Jirga in Kabul, Afghanistan	UNDP	8.100

9. Annexes

IMPORTANT NOTE

This section contains a series of documents concerning building measures and contracts, which the GTZ has developed according to its own very specific requirements over many years, and which it applies in its projects. They make no claims to being universally applicable. They have been included in these Guidelines to provide information and examples for third parties involved in the implementation of building measures within the framework of development cooperation, emergency aid and especially in the planning and execution of building projects. All documents have to be analysed very carefully in each individual case and have to be adapted to the specific conditions and requirements of the respective countries and business partners. The contract partners are solely responsible for the use of the documents.

The GTZ accepts no responsibilty for any problems or inconsistencies that may arise by the use of the documents presented here, either unchanged or in modified form.

Most of the documents were prepared in English. French and Spanish versions also exist at GTZ. The authors

9.1 Questionnaire for Architects/Engineers and Contractors (QUARCENG)

1.	name of firm, full address, international telephone and telefax numbers:

2.	structure of firm:	
	legal form:	year of formation:
	proprietor:	original capital:

3.	bank references:

4.	technical equipment:

5.	annual turnover:			in: *currency*	
	1999	2000	2001	2002	2003

6.	permanent personnel:		
	number	field of activity:	qualification:

7.	reference projects **completed** during the last five years:				
	name of project:	type of project:	remuneration/fee	period of construction	client

	reference projects commenced and still under construction:				
	name of project:	type of project:	remuneration /fee	period of construction	client

8.	membership of association(s)

9.	the undersigned declare(s) that the statements made in this questionnaire are both correct and complete. .... place and date .... legal seal and signature(s)

10.	enclosures and/or remarks:

9.2 Bidding Conditions for Consultants/Architects (BIARCENG)

1. THE BID

For the purpose of a comprehensive evaluation the bid should contain the following information:

1.1 Details of the design concept and/or working concept including information about the construction method envisaged as well as

(1) Estimated time schedules for preparation of the planning, compiling specifications and Bill of Quantities, tendering period, and the execution of the construction phase.

(2) Details of the resident engineer(s) proposed for this/these position(s) including his/their curriculum vitae.

(3) Brief listing of reference projects completed.

1.2 Statement about the earliest possible date for commencing the works.

1.3 The completed questionnaire (QUARCENG).

2. COST OF PREPARING THE BID

The bid with all enclosures shall become the property of the General Contractor upon delivery.

No remuneration shall be granted for the preparation of the bid and all the documents attached thereto.

3. ADDRESS OF BID

Bids must be delivered in a separate, closed envelope, lettered

Project No............................ **"BID FOR** ...."

to (Address of General Contractor) **c/o** ....

4. Any modification to or withdrawal of the bid must be notified in writing to the above mentioned address prior to the closing date for submission of bids.

5. Agreements with third parties in restraint of competition to the disadvantage of the General Contractor are not admissible and shall result to exclusion of such bids.

9.3 Contract for Architectural Consult Consulting Services (CONTRARC)

The **Address of the General Contractor** .... - hereinafter referred to as the **"Employer"** - and .... - hereinafter referred to as the **"Consultant"** - herewith enter into the following Contract for the Project .... Country:	Date .... reference to in all correspondence: Contract No.: .... Project No.: ....

1. Purpose of Contract

(e.g. contribution of the construction works towards the goal of the project)
....
....
....

2. Scope of Services

In order to achieve this purpose, the Consultant shall perform services according to the stipulations in the subsequent clauses for the construction of:

(number and type of building(s), listing of the space requirements, type of construction, etc; if applicable, reference shall be made to the project information in the Annex)

3. Three Phases of Contract

3.1 By signing this contract, the Employer commissions the Consultant with the services pursuant to Section 4 (Phase 1), only.

3.2 If the planning work shall be continued, the Employer has an option to commission the Consultant with the services specified in Section 5 (Phase 2).

3.3 In case of execution of the construction work, the Employer has a further option to commission the Consultant with the task of site supervision described under Section 6 (Phase 3).

3.4 The Employer reserves the right to limit the assignment to individual services of Phase 2 or 3.

3.5 The assignments pursuant to Sub-Sections 3.2. and 3.3 shall be made in writing.

3.6 The Consultant shall be bound to provide the relevant services if the Employer exercises an option within 12 months after acceptance of the results of the previous phase. On the other hand, the Consultant shall not have a legal claim to the assignment of services of Phase 2 or 3. The Consultant cannot derive any increase in remuneration from the limitation of assignment to individual services of Phase 2 or 3. Nor shall the Consultant have the right for a claim for remuneration of any phase or individual service with which he has not been commissioned.

4. Phase 1 (Preparation of the Documents for Building Permission)

Within this phase the Consultant shall execute the following services:

4.1 Establishing whether cadastral maps, surveyors' plans, soil investigations or other documents of the building site exist. If not, or if the existing documents do not suffice, procurement of appropriate tenders and assignment after prior written approval by the Employer. Costs arising from this procurement shall be paid as reimbursable expenditures in addition to the remuneration as laid out in Section 9.

4.2 Sketching of a preliminary design and presenting the same to the Employer, which must be approved by the Employer prior to proceeding.

4.3 Preparation of a site layout plan on a scale of 1:500 or 1:200, including outdoor facilities.

4.4 Preparation of preliminary design plans for the buildings and outdoor facilities on a scale to be agreed with the Employer of 1:200 or 1:100.

4.5 Preparation of the explanatory report for the buildings and outdoor facilities in accordance with EXPLARER

4.6 Preparation of a cost estimate for the buildings and outdoor facilities (using blank specimen of COSTESTM) and calculation of areas (gross floorplan area according to customary local standard).

4.7 Drawing up of a preliminary structural analysis.

4.8 Drawing up of preliminary plans of the technical installations, such as for sanitary, electrical, and possibly telecommunicative and/or mechanical purposes, including:

(1) Rough estimate of technical requirements and output values.
(2) Contribution to the explanatory report pursuant to EXPLARER
(3) Cost estimate according to empirical values pursuant to COSTESTM.

4.9 Obtaining of building permission and other permits required for the execution of the works in the recipient country.

5. Phase 2 (Preparation of the Construction Documents)

Within this phase the Consultant shall execute the following services:

5.1 Architectural design planning:

5.1.1 Preparation of the final design plans for construction:

(1) layout plan on a scale of 1:500 or 1:200,

(2) floor-plans, sections and elevations for all buildings/structures on a scale of 1:100,

(3) plans for the outdoor facilities on a suitable scale.

5.1.2 Preparation of the working drawings on a scale of 1:50, important details on a scale of 1:10, 1:5 or 1:1 and all outdoor facilities on a suitable scale.

5.2 Structural planning:

(1) elaboration of the structural analysis suitable for review and approval,

(2) preparation of positional drawings for the structure,

(3) preparation of formwork drawings as supplement to the working drawings pursuant to Section 5.1.2,

(4) drawings of construction elements with instructions for installing the same (e.g. reinforcement plans, plans for structural steelworks and woodwork),

(5) compilation of detailed steel and/or other lists of structural materials.

5.3 Planning of mechanical, electrical and sanitary and/or other installations:

(1) Determination of technical requirements and output values.
(2) Dimensioning of all equipment and parts of installations.
(3) Pertaining drawings on a scale of 1:100.
(4) Determination of pipe channels and openings in walls, ceilings and floors.
(5) Working and detail drawings on a scale to be agreed with the Employer.

5.4 Services for the award of construction contract according to the Employer’s instructions:

(1) Compilation of the specifications with technical preface.

(2) Calculation of quantities and preparation of the Bill of Quantities.

(3) Calculation of costs of the buildings and outdoor facilities based on the Bill of Quantities.

(4) Adaptation of the form and content of the Tender Documents for Contractors, specified by the Employer, to the special conditions of the building site and building(s) to be built.

(5) Conducting of pre-qualification procedures for contractors, including their evaluation.

(6) Proposal of contractors to be invited to tender (preparation of short list).

(7) Submission of complete tender documents for review and approval to the Employer.

(8) Conducting of the tendering action according to Tender Conditions, if instructed to do so by the Employer.

(9) Evaluation of the Tenders received, including elaboration of proposal for the award of contract.

(10) Conducting of or participating in contract negotiations, if requested by the Employer.

6. Phase 3 (Site Supervision)

6.1 The Consultant shall assume all engineering functions and duties in accordance with the contractual provisions made between the Employer and the building contractor *which are based on the FIDIC Terms of Contract*[1].

[1] delete if not applicable

Without claiming to be complete, the functions and duties are as follows:

6.1.1 Technical Services:

(1) Due and proper supervision of the execution of the construction work and mechanical, electrical and all other installation works to ensure that they conform with the specifications and drawings, the recognized engineering principles and all applicable regulations.

(2) Provide technical advice and necessary support to all personnel assigned to the project.

(3) Examination and approval or rejection of materials for construction work supplied by the contractor(s).

(4) Amending of the working drawings in accordance with the actual execution of the works (see paragraph 7.2.3 (1)).

(5) Technical inspection of the execution of the structure to ensure that it conforms with the approved structural documents.

(6) Technical inspection of auxiliary construction requirements; e.g. scaffolding, craneways, excavation supports, etc.

(7) Inspection of concrete production and processing at the building site and evaluation of quality controls.

(8) Follow-up of the working progress schedule provided by the building contractor or, if not available, own compilation of a suitable programme (e.g. bar chart) which has to be agreed to and signed by the contractor.

(9) Keeping of a construction diary.

(10) Joint measurements of the work in place with the building contractor. This includes the preparation of special measurement records for work that cannot be measured after the construction work has been completed. They shall be confirmed in writing by the building contractor and the Resident Engineer (Not applicable for lump sum contracts).

(11) Upon special request of the Employer, intermediate acceptance of construction work (e.g. acceptance of the rough structure).

(12) Preparation of and participation in taking-over procedures by the Employer; independent taking-over, if instructed to do so by the Employer (TAKGOVER).

(13) Participation in the handing-over of the completed project, compilation and handing over of the necessary documents; independent handing over and drawing up of the handing-over certificate to the project executing agency/beneficiary, if instructed to do so by the Employer (HNDGOVER).

(14) Inspections during the Contractor's defects liability period and supervision of rectification of any faults and defects that may occur.

6.1.2 Commercial Services connected with the construction

(1) Checking and, if necessary, correction of invoices, reports, lists, etc. of the building contractor(s) within the periods stipulated in the contract between the Employer and the contractor(s). Calculations of quantities, accounting files and cost calculations shall be checked for technical and arithmetical accuracy and certified by date and signature. In order to show that this has been done, the Consultant shall tick all correct values and amounts reported.

(2) Examination of new prices for additional or amended services to ensure that they are in line with the cost estimate of the original tender on which the Contract is based as well as the current local situation.

6.2 Assignment of Personnel for Site Supervision

6.2.1 In order to supervise the construction work, the Consultant shall assign during the period from approx.....................to..................the following personnel:

1) Resident Engineer: ....

2) ....

3) ....

Any change of assigned personnel require(s) prior written approval of the Employer.

6.2.2 The beginning and the end of the period of assignment shall be stipulated in writing when the Consultant is commissioned with Phase 3 according to Sub-Section 3.3.

6.3 Reports

6.3.1 The Consultant shall submit

• monthly reports on the progress of construction in accordance with PROGREP, including a progress diagram, photographs and other relevant data as well as details on completed work, percentage of completion, basic climatic conditions and average number of workers on site, special incidents, work forecast, etc.,

• a final report two months after completion and taking-over of the construction works, comprising:

(1) a description of the progress of the entire project from planning to taking-over or handing-over, comments about the construction period, listing major problems encountered during construction and how these were solved; and

(2) an overview and tabulation of the total costs compared with the calculation according to COSTESTM.

6.3.2 Special reports shall be forwarded to the Employer without delay in case of important incidents or circumstances that may occur. Each such report shall include in particular events and circumstances that give rise or may give cause to claims against the Building Contractor(s) commissioned with the execution of the construction work.

6.3.3 All reports shall be submitted two the Employer in duplicate in English language.

7. Documentation

7.1 All documents shall clearly indicate that they were produced on behalf of the Employer. The title block of the drawings shall be approved by the Employer. All documents shall be drawn up in English language.

7.2 The Consultant shall provide the following number of copies:

7.2.1 Phase 1:

Documents for Building Permission pursuant to Section 4	3 copies

7.2.2 Phase 2:

(1) Final design plans pursuant to Section 5.1.1	8 copies
(2) Working drawings, structural analysis, positional drawings, formwork and reinforcement plans, lists and installation drawings pursuant to Sections 5.1.2, 5.2 and 5.3	4 copies
(3) Specifications and Bill of Quantities pursuant to Sections 5.4 (1) and (2)	12 copies
(4) Reproducibles of final design and working drawings	.....sets

7.2.3 Phase 3:

(1) As-built drawings (copies folded to DIN A 4 size) for all buildings and outdoor facilities, including structures and installations.	3 copies
(2) Photographs of all buildings/installations after completion.	3 copies
(3) Updating of the calculations of areas in accordance with the actual execution of construction work.	3 copies

8. Deadlines

The following deadlines shall apply for the services performed by the Consultant:

(1) First submission of the preliminary design pursuant to Sub-Section 4.2:
..... weeks after signing the contract

(2) Preparation of all Documents for Building Permission pursuant to Section 4:
..... weeks after approval of the first preliminary design

(3) Preparation of the Construction Documents pursuant to Section 5:
..... weeks after being commissioned pursuant to Section 3.2.

(4) Completion and submission of the final report pursuant to Sub-Section 6.3.1:
..... weeks after acceptance and taking over of the works

9. Remuneration

9.1	The Consultant shall be entitled to the following remuneration:	
9.1.1	Phase 1 the lump sum of	....
9.1.2	Phase 2 the lump sum of	....
9.1.3	Phase 3	
	(1) For a full time Resident Engineer for overall site supervision during the construction period of approximately.......months the lump sum of	....
	(ALTERNATIVE)	
	(1) For a part time Resident Engineer (.....%) for overall site supervision during the construction period of approximately months the lump sum of	....
	(2) For part time special supervision (e.g. structural, sanitary, electr., mechanic, etc.), as required during the contract period the lump sum of	....
	(3) For the Documentation of Phase 3 (Section 7.2.3) and the Final Report pursuant to Section 6.3.1 the lump sum of	....
	Sub Total for Phase 3	....
9.1.4	**Total Remuneration**	....
	(in words: ....)	
9.2	All lump sums and expert/month-rates as stated above are fixed prices and shall include all costs incurring in connection with the performance of these services.	
9.3	The Consultant shall invoice turnover tax if and as prescribed by law; the Employer will refund the amount in addition to the remuneration.	
	Amount of turnover tax *(if applicable):*	....

10. Terms of Payment

Payment of the remuneration shall be made in .... *(currency)* upon receipt of the Consultant's invoice in duplicate as follows:

10.1 Phase 1: 95% after acceptance of the respective services by the Employer.

10.2 Phase 2: 95% after acceptance of the respective services by the Employer.

10.3 Phase 3:

10.3.1 80 % of the remuneration stipulated in Sub-Sections 9.1.3 (1) and (2) in monthly payments of.................*(currency/amount)* upon presentation of an invoice in duplicate, starting one month after the commencement of the construction works.

10.3.2 15 % of the remuneration stipulated in Sub-Section 9.1.3 (1) and (2) after acceptance of the construction work and presentation of the Taking-Over Certificate (TAKGOVER).

10.3.3 100% of the remuneration stipulated in Sub-Section 9.1.3 (3) after acceptance of the services by the Employer.

10.4 The 5 % remaining under Sub-Sections 10.1 to 10.3.2 above shall be remitted upon expiry of the warranty period. The amount retained for this period shall be disbursed following taking-over without defects upon provision of a guarantee by a bank accepted by the Employer in accordance with the specimen enclosed (GARANTDL).

11. Statute of Limitation of Claims of the Consultant

The claims of the Consultant arising from the Contract shall become statute-barred unless they are asserted vis-a-vis the Employer in writing within 6 months following the end of the contractually agreed period of assignment or after acceptance of the work.

12. Duty of Care and Exercise of Authority

12.1 The Consultant shall exercise reasonable skill, care and diligence in the performance of his obligations under the Contract and shall observe all local regulations in force.

12.2 Regarding any claims of the Employer against the Building Contractor or any third party, the Consultant shall take the necessary measures to protect rights provisionally if and to the extent that the Employer cannot be informed in good time.

12.3 Where the Services include the exercise of powers or performance of duties authorised or required by the terms of the contract between the Employer and the Building Contractor, the Consultant shall

- act in accordance with this contract and the contract between the Employer and the Building Contractor,

- if authorized to certify, decide or exercise discretion, do so fairly between the Employer and the Building Contractor not as an arbitrator but as an independent professional acts by his skill and judgement.

13. Warranty Period

The warranty period of the services of the Consultant shall be two years, beginning with the taking-over of the construction works, but not later than six years after acceptance of the services in question.

14. Insurance for Liability

14.1 The Consultant undertakes to take out an insurance for liability for damage caused negligently by the Consultant, his staff and other persons he engages for or in connection with the implementation of the Contract to the Employer, the recipient of the works in the country of assignment or to third parties.

14.2 The insurance sum shall be as customary in the country where the works are to be executed.

14.3 Upon request, the Consultant shall prove to the Employer his insurance coverage.

15. Copyright

The Consultant retains copyright of all documents prepared by him. The Employer shall be entitled to use them or copy them only for the Works and the purpose for which they are intended, and need not obtain the Consultant’s permission to copy for such use.

16. Conflict of Interest

Unless otherwise agreed in writing by the Employer, the Consultant and his personnel shall have no interest in nor receive remuneration in connection with the Project except as provided for in this Contract. The Consultant shall not engage in any activity which might conflict with the interest of the Employer under this Contract.

17. Applicable Law

German Law shall apply to this contract.

18. Arbitration

All disputes arising in connection with the present Contract shall be finally settled under the Rules of Conciliation and Arbitration of the International Chamber of Commerce by one or more arbitrators appointed in accordance with the said rules.

19. Modifications and Alterations

Any modifications, additions and/or deletions to this contract as well as all fundamental communication must be made in writing only.

20. Termination of the Contract

20.1 The Employer may terminate the Contract at any time either wholly or in respect of individual parts of the work or the services.

20.2 Should the Employer terminate the Contract for a reason for which the Consultant is not answerable, the Consultant shall be entitled to demand the agreed sum in remuneration. However, he shall agree to non-incurred expenses or avoidable expenditure being deducted from the sum otherwise due. Salaries and ancillary costs in respect of salaries for the experts of the Consultant assigned to the project shall as a rule be deemed not incurred if they would have become due more than 3 months after the date on which termination of the Contract took effect. The Consultant shall bear the burden of proof for exceptions to this rule.

20.3 If the Employer terminates the Contract for a reason for which the Consultant or its experts are answerable, remuneration shall be paid only for the works already executed, provided that the Employer can utilize them, in accordance with the Contract prices, or, that part actually executed shall be remunerated as a proportion of the total contractual works on the basis of the Contract prices. Those works executed which the Employer cannot utilize shall be returned to the Consultant at the latter's expense. Insofar as the contractual work comprises the rendering of services, the services rendered up to the date of termination shall be deemed utilizable works. In no case shall there be a claim to more than the contractual amount.

20.4 The Consultant shall be deemed answerable for the reason for termination if the Employer terminates because bankruptcy proceedings have been initiated against the assets of the Consultant, or because judicial composition proceedings have been initiated against the Consultant, or it has discontinued its payments not only on a temporary basis, thus jeopardizing the proper execution of the Contract.

20.5 Other legal rights and claims of the Employer and Consultant shall remain unaffected.

21. Partial Invalidity

The invalidity of one or several provisions of this Contract shall not affect the validity of the remaining provisions. Invalid provisions shall be substituted by such provisions as are closest to the economic purpose aimed at by both contracting parties.

22. Copies

This Contract shall be drawn up in duplicate and each party shall receive one copy thereof.

.... (place)	.... (date)
.... THE EMPLOYER	.... THE CONSULTANT

List of Annexes:

BIARCENG	Bidding Conditions for Consultants/Architects
__________	Project Information (if applicable): *(Information about location and condition of site, type and number of buildings/installations planned, space requirements, exterior facilities, landscaping)*
EXPLAREP	Guide for the Preparation of the Explanatory Report
COSTESTM	Form of Cost Estimate
GARANTAP	Specimen of Advance Payment Guarantee (if applicable)
GARANTDL	Specimen of Bank Guarantee for the Defects Liability Period
PROGREP	Specimen of Construction Progress Report
TAKGOVER	Form of Certificate of Taking-Over
HNDGOVER	Form of Handing-Over Certificate
QUARCENG	Questionnaire for Architects/Engineers

the following Annexes will be handed over with the award of the Contract:

__________	Copy of Project Agreement (if applicable)
INVTDFID	Form of Invitation to Tender (FIDIC Contracts)
TENDRFID	Form of Tender (with Appendix) for Contractors (FIDIC Contracts)
TENDRCON	Tender Conditions for Contractors (FIDIC Contracts)
FIDIC-P2	Conditions of Particular Application (FIDIC II)
GARANTPF	Specimen of Performance Guarantee (if applicable)

ALTERNATIVE to FIDIC-Contracts (instead of the above 6 annexes):

INVTDLMB	Form of Invitation to Tender for Contractors (for Contracts of Construction Works on Lump sum or Measurement Basis)
CONCTRMB	Contract for Construction Works on Measurement Basis,
CONCTRLB	Contract for Construction Works on Lump sum Basis *(Alternative to CONCTRMB)*

9.4a Form of Cost Estimate (COSTESTM)

COST ESTIMATE
for
Budgeting Purposes
- Construction -

Supplement No.: .... dated: ....

Project No.: ....
Project Name: ....

Prepared by:	
.... (Architect/Consultant)	.... (place, date, signature)

Reviewed and approved:	
.... (General Contractor)	.... (place, date, signature)

Numbers of the subtotals correspond to items of the Explanatory Report (EXPLAREP)

Estimated Cost Summary	**Euro**
Subtotal 1: Construction site	....
Subtotal 2: Site Development	....
Description of buildings/parts of buildings	Euro
	....
	....
	....
	....
	....
Subtotal 3: Buildings	....
Subtotal 4: Technical Installations/Equipment	....
Subtotal 5: Exterior Facilities	....
Subtotal 6: Additional Measures	....
Subtotal 7: Architect's/Consultant's Fee	....
Contingencies	....
Total of Cost Summary*/of Supplement N°...: *	....

* Total costs as per original cost estimate		....
Total costs as per	Supplement N° 1	....
	Supplement N° 2	....
	Supplement N° 3	....
Grand Total		**.........................**

* *Delete which is not applicable*

NOTE: The calculations of the cost estimates listed above with the calculations of the gross floor areas are to be attached for review and approval as enclosure to this COST ESTIMATE

9.4b Explanatory Report (EXPLAREP)

Guide for the Preparation of the
EXPLANATORY REPORT

For the *(insert name of construction project)* PN:......................................
....
....

0. Planning

(1) General information (e.g. design layout, compliance with functional design)
(2) Compliance with space requirements
(3) Requirements under public law (compliance with local rules and regulations)
(4) Possibilities for future extension

1. Construction Site

(1) Number of parking spaces for vehicles

(2) Evaluation of the location in or with respect to the next town/village

(3) Information regarding the development of the construction site, possible need for major earth movements

(4) Evaluation of the lots/buildings adjacent to the construction site *)

(5) Bearing capacity of the soil, results of soil investigations

2. Site Development, Technical Infrastructure

(1) Access roads; transportation facilities

(2) Water supply

(3) Sewage and waste water disposal

(4) Supply of electricity

*) Photographs shall be enclosed, if considered relevant

3. Buildings/Parts of Buildings

(1) Foundations
(2) Walls, exterior and interior
(3) Ceilings
(4) Stairs and landings
(5) Roof, gutters, downpipes
(6) Chimneys, air supply/smoke exit ducts
(7) Sun protection (louvres, screens, Venetian blinds)
(8) Ceiling and wall finish
(9) Floor finish
(10) Facade finish
(11) Exterior and interior doors
(12) Windows, dome lights, window grills
(13) Energy conservation measures
(14) Fire prevention measures

4.1 Technical Installations and Equipment

(1) Water and waste water, supply, treatment, and disposal
(2) Air conditioning, mechanical ventilation, air ducts
(3) Gas and liquids
(4) Electricity, distribution within the building(s)
(5) Means of telecommunications
(6) Heating system
(7) Lightning protection

4.2 Special Features/Elements

(1) Special structures
(2) Special installations
(3) Special technical equipment
(4) Special fixed features
(5) Elements of art involving artistic design

5. Exterior Facilities

(1) Fences, walls
(2) Drainage and sewage disposal
(3) Electricity supply system
(4) Special-purpose installations (transformer station)
(5) Roads, parking areas, walkways
(6) Green areas
(7) Other outdoor features (playgrounds)

6. Additional Measures

State if provisions are foreseen for construction work during rainy seasons or snow and frost periods respectively

9.5 Form of Invitation to Tender for Construction works (recommended for contracts value up to 150,000 Euro) (INVTD150)

> *Employer's I Consultant's letterhead* <

Date:.....................
Negotiated Procedure for
Project No.:.....................

Submission/Opening Date:
in ....
on .... (day)
the .... (date)
at .... (time)

....
....
(Contractors address)

INVITATION TO TENDER
(Building Construction Works)

1. Subject :...
(insert name of project)

Dear Sir or Madam,

The...........................***(Name I Address of Employer)***...
....
hereinafter referred to as "The Employer",
intends to..
....
....
(insert brief description of building(s)/installation(s))

The execution of the Works will be performed within the frame of the Technical Cooperation between........*(Donor Country)*.....................and the ....
(recipient country).

It is intended to award the contract for the Works as detailed in the attached Drawings, Specifications and Bill of Quantities.

2. The Tender Documents consist of

2.1 Specimen of Contract for Construction Works on Measurement/Lump sum* Basis (in duplicate)

2.2 Specifications with Bill of Quantities - in duplicate

2.3 .... Drawings No............., dated...............
.... Drawings No.............dated...............
.... Drawings No.............dated...............

2.4* * Specimen of Advance Payment Bank Guarantee

2.5** Specimen of Defects Liability Guarantee

3. Further information, regarding the intended project, may be obtained.at

....
(insert detailed address)
during normal office hours.

4. In the event that the Bill of Quantities provides for a division of the Works into separate lots, the Employer reserves the right to award separate contracts for those lots.

5. If you are willing to execute the Works you are requested to send or hand in the enclosed Contract for Construction Works on Measurement/Lump sum* Basis together with all annexes, exclusively prepared in the English language, completed and signed by a duly authorized person, in a sealed envelope, not later than stated as submission date on the front page to/at

....

* Delete inapplicable alternative
** Delete inapplicable item

The Contract for Construction Works on Measurement/Lump sum* Basis together with all annexes shall be submitted in double packing. The inner packing shall be sealed and labelled as follows:

TENDER FOR PN: ....
PROJECT NAME: ....

The period for submission of Tender shall expire with the date and time mentioned in the letter head. Tenders may be withdrawn by letter, telex, telegraph, or fax, prior to the submission time and date.

6. The period of adjudication begins with the submission/opening date and expires on the ....(date).......... The Tenderer is bound to his Tender until this date.

7. Your confirmation of the receipt of the tender documents would be appreciated. If you are not interested in submitting a Tender, please return the enclosures blank as soon as possible.

Employer or The Authorized Representative

9.6 Form of Invitation to Tender for contracts value above 150,000 Euro (INVTDFID)

> *Employer's I Consultant's letterhead* <

Date:.....................
Negotiated Procedure for
Project No.:.....................

Submission/Opening Date:
in ....
on .... (day)
the .... (date)
at .... (time)

....
....
(Contractors address)

INVITATION TO TENDER

1. Subject :..
(insert name of project)

Dear Sir or Madam,

The..........................***(Name I Address of Employer)***..
....
hereinafter referred to as "The Employer",
intends to ....
....
....
(insert brief description of building(s)/installation(s))

The execution of the Works will be performed within the frame of the Technical Cooperation between........*(Donor Country)*.....................and the
....
(recipient country).

It is intended to award the contract for the Works as detailed in the attached Drawings, Specifications and Bill of Quantities.

2. The Tender Documents consist of

2.1 Tender Conditions for Contractors

2.2 Tender with Appendix - in duplicate

2.3 Specifications with Bill of Quantities - in duplicate

2.4 .... Drawings No.............dated...............
.... Drawings No............., dated...............
.... Drawings No............., dated...............

2.5 Part II - Conditions of Particular Application (Supplement to Part I of the International Conditions of Contract for Works of Civil Engineering Construction - FIDIC, fourth edition 1987, reprinted 1992 with amendments)

2.6 Specimen of Advance Payment Bank Guarantee

2.7 Specimen of Performance Guarantee

2.8 Specimen of Defects Liability Guarantee

3. The Contract for the Works is based on the “Conditions of Contract for Works of Civil Engineering Construction” FIDIC - Part I, General Conditions, prepared by the Fédération Internationale des Ingénieurs-Conseils, fourth edition 1987, reprinted 1992 with amendments, which are not enclosed but may be examined at

....
(insert detailed address)

during normal office hours. Further information may also be obtained.

4. In the event that the Bill of Quantities provides for a division of the Works into separate lots, the Employer reserves the right to award separate contracts for those lots.

5. If you are willing to execute the Works you are requested to send or hand in the enclosed Tender together with all annexes, exclusively prepared in the English language, completed and signed by a duly authorized person, in a sealed envelope, not later than stated as submission date on the front page to/at

....

The Tender shall be submitted in double packing. The inner packing shall be sealed and labelled as follows:

TENDER FOR PN: ....
PROJECT NAME: ....

The period for submission of Tender shall expire with the date and time mentioned in the letter head. Tenders may be withdrawn by letter, telex, telegraph, or fax, prior to the submission time and date.

6. The period of adjudication begins with the submission/opening date and expires on the ....(date).......... The Tenderer is bound to his Tender until this date.

7. Your confirmation of the receipt of the tender documents would be appreciated. If you are not interested in submitting a Tender, please return the enclosures blank as soon as possible.

....
Employer or The Engineer/Consultant

9.7 Tender Conditions for Contractors (TENDRCON)

1. GENERAL

1.1 The Tender must comply with the following conditions and instructions. Failure to do so is liable to result in the rejection of the Tender.

1.2 “Tenderer” means any person or persons, partnership, firm or company being prequalified and submitting fully priced Bill of Quantities in accordance with the Tender.

1.3 All recipients of the Tender Documents shall, whether they submit a Tender or not, treat the details of these documents as confidential.

2. TENDER DOCUMENTS

2.1 The Tender must be made out on the forms provided in the Tender Documents duly completed in ink or in print. The Bill of Quantities must be fully priced, totalled, checked arithmetically, and the grand total must be in compliance with the sum entered in the Tender. Tender and Contract Documents must be kept intact.

The Tender Documents and accompanying documents shall be signed by the Tenderer or his legally authorized representative and be returned to the address according to No. 5 of the "Invitation to Tender".

2.2 The Tender must be accompanied by:

(a) A copy of each Circular Letter (see par.7) issued to Tenderers by the Employer or the Engineer (if applicable). Each copy of such Circular Letter must be endorsed by the Tenderer.

(b) The Form of Tender with Appendix to Tender (if applicable), and the Form of Bid Bond (if any), together with the Bill of Quantities, fully priced and summarized.

Any missing document may result in the rejection of the Tender.

2.3 Prices must be quoted for all items in the Bill of Quantities, where applicable, or a clear indication must be given that the values of the Works described under items left unpriced are allowed for elsewhere.

3. EXAMINATION OF SITE

3.1 Tenderers shall visit the site of the Works and obtain for themselves all information that may be necessary for completing their Tenders and for entering into a contract with the Employer. Tenderers shall aquaint themselves with the requirements of the contract, e.g. characteristics of the site and its surroundings, hydrological and climatic conditions.

In particular, Tenderers shall acquaint themselves with the conditions of

(a) existing access roads or other means of communication and access to the site of works, incl. police regulations concerned therewith,

(b) available land for storage, workshops, toilets, and site office(s),

(c) available connections to electricity and water for construction,

(d) the soil and subsoil to be excavated, stored or removed from site.

The availability of local labour, their quarters on site (if necessary), local materials and other local recources shall also be considered.

4. MODIFICATIONS/ADDITIONAL OFFERS

4.1 The Tender may contain only the prices and statements required in the Tender Documents and shall be signed by a duly authorized person. Any addition to, deletion or alteration of the Tender Documents may result in the rejection of the Tender.

4.2 Additional offers/proposals for modifications which, from the technical point of view, deviate from the Engineer's Specification or such which entail a demand for other conditions of payment, execution deadlines or price reserves, shall only be admitted in connection with the submission of the base Tender.

-

Proposals for modifications and additional offers shall be made in a separate annex and must be clearly marked as such.

Modifications by the Tenderer concerning prices quoted or statements made shall be unambiguous. Samples and patterns submitted with the Tender must be clearly marked as appertaining to the Tender.

5. PRICES

5.1 All prices (unit prices, lump sum prices, settlement rates, hourly wages, bonuses) shall be stated **without** tax (turnover tax, value added tax, or alike). The amount of applicable tax shall be based on the locally valid tax rate and shall be added as the last item on the summary sheet of the Tender.

5.2 The offer of a discount based on the observance of certain payment deadlines described by the Tenderer shall be taken into account in the evaluation only if the tenderer declares that such a discount shall apply to all payments on account and the final payment, providing that the deadlines set for payments leave reasonable time for their processing.

5.3 The Employer will not be held responsable if the local bank in the recipient country converts the payments to the Contractor into local currency before crediting the same to the Contractor's account. The Contractor is not entitled to claim for any charges or fees deducted by the bank due to the exchange and/or transfer of payments.

6. AMBIGUITIES

If, in the Tenderer's opinion, the Tender Documents contain ambiguities which might influence the calculation of the prices, the Tenderer shall indicate this to the Employer by letter, telefax, telex, or telegram before submitting his Tender within 30 days after the receipt of the Tender Documents. Necessary clarification will be made by Circular Letter(s).

7. CIRCULAR LETTER

7.1 In the event that the Employer sends Circular Letters to the Tenderers during the tendering period in order to comment, clarify, or modify the Contract Documents, these Circular Letters shall become an integral part of the Contract Documents and it shall be assumed that they have been taken into account by the Tenderers in drawing up their Tender.

7.2 The Tenderer shall confirm the receipt of a Circular Letter to the Employer immediately. No Circular Letter shall be dispatched within 21 days before the submission date for the Tender, except one that confirms a due postponement of the original submission date.

8. PROHIBITED AGREEMENTS

Agreements restricting the competition are not permitted, especially arrangements and negotiations with other Tenderers in respect of

- submitting or not submitting a tender,

- the prices to be demanded and profit rates,

- binding arrangements for other compensation,

- processing cost margins and other price components,

- terms of payment and delivery and other conditions of contract insofar as they influence the prices directly or indirectly,

- indemnity or compensation payments for non-participation or limited participation in the competition,

- and profit-sharing.

9. SUBCONTRACTORS

If parts of the Works are intended to be executed by subcontractor(s), the Tenderer shall indicate nature and scope of such parts of the works and state name and address of the subcontractor(s) considered.

10. JOINT VENTURES

Tenders submitted by Joint Ventures or other Bidding Combinations shall be accepted only if the following information is provided with the Tender

(a) A list of the members of the Joint Venture/Bidding Combination designating the duly authorized representative(s).

(b) A declaration, signed by duly authorized representatives of all members, stating that the duly authorized representatives shall represent the members specified in the list in a legally binding manner vis-a-vis the Employer, and that all members are jointly and severally liable for the performance of the Contract with the Employer.

11. SUBMISSION OF TENDER

11.1 The Tender shall be submitted to the address stated in and prior to the time and date specified in the Invitation to Tender.

11.2 Tenders received after the date and time of submission will not be considered.

12. OPENING OF TENDERS

12.1 Tenderers shall be free to attend the opening session of the Tenders.

12.2 The session shall be held for opening and reading out the Tenders. Until this session all Tenders received shall be kept under lock and key with the envelopes unopened and marked with the date of receipt only. For the Opening Session the following procedure shall be observed and laid down in the minutes of meeting, stating place, date and time of the opening:

(a) The chairman of proceedings shall establish whether the seals of the envelopes are intact.

(b) Samples and patterns submitted with any Tender shall be on hand and duly marked.

(c) The Tenders shall be opened one after another and all major parts marked. The names and addresses of the Tenderers and the final amounts of their Tenders or of individual sections as well as other particulars concerning the price shall be read out. It shall be announced if and by whom proposals for modifications and/or additional offers have been submitted. Other details of the contents shall not be made known.

(d) The minutes taken of the opening session shall be read out, shall contain a note to the effect that they have been read out aloud and that it has been acknowledged as correct or shall specify what objections have been raised by whom.

(e) The minutes shall be signed by the chairman of proceedings.

12.3 Tenders which were not received prior to the submission time and date shall be specified separately in the minutes or addendum thereto. The time of receipt and the reason for the delay of the receipt shall be noted. Envelopes and other means of proof shall be kept in safe custody.

12.4 The Tenderers and their authorized representatives shall be permitted to inspect the minutes of the opening session and addenda thereto (if any). The minutes of the opening session shall not be published.

13. EVALUATION OF TENDERS

13.1 The following Tenders shall be excluded:

(a) Tenders received after opening date and time.

(b) Tenders submitted by tenderers who have entered into an agreement which constitutes a prohibited restriction of competition.

13.2 In selecting the Tenders to be considered for the award of contract, only those Tenderers who offer the necessary security for the performance of the contractual obligations will be taken into account. This shall entail the necessary expertise and experience, performance capacity and capability, the reliability as well as technical and financial means and recources.

13.3 Tenders, of which the prices are obviously disproportionate to the Works concerned, will be disregarded. Only such Tenders from which proper execution and covering of the defect liability period can be expected with due regard to rational and thrifty construction operations and efficient management will be considered. From those Tenders the award will be made to the one which appears to be the most acceptable with regard to all technical, functional, environmental and economical aspects.

13.4 Any arithmetical error by the Tenderer in pricing the Bill of Quantities or in the additions or in carrying forward subtotals to the summary or to the Tender shall be corrected during the evaluation of the Tenders. In such cases the Tender sum shall be adjusted accordingly and the Tenderer shall be informed. It shall be assumed that the unit price rates entered in the Bill of Quantities are correct.

13.5 Proposals for modifications and additional offers which the Employer has admitted or requested for the tendering action shall be evaluated in the same way as the base tender. Other proposals for modifications and additional offers may be considered.

13.6 The Employer does neither bind himself to accept the lowest Tender or any Tender, nor will he be responsible or pay for expenses or losses which may be incurred by any Tenderer with the preparation of his Tender.

14. CANCELLATION OF THE TENDERING ACTION

14.1 The Tendering Action can be cancelled, if

(a) no Tender has been received which corresponds to the Tender Conditions,
(b) there have been substantial changes to the basis of the Tendering Action, or
(c) there are other serious reasons for such a cancellation.

14.2 The Tenderers shall be informed without delay of the cancellation of the Tendering Action by the Empoyer or his Engineer and of the reasons for the same.

9.8 Tender Form for contract above 1500,000 Euro (TENDRFID)

TENDER

Contractors stamp

Project No: ....

Project Title: ....

Contractor: ....

To .... **or** ....
(Name and address of Employer) *(Name and address of project office, embassy or consultant's office in the recipient country)*

Dear Sir or Madam,

1. Having examined the Conditions of Contract, Drawings, Specifications, Bill of Quantities and all other documents received with the Invitation to Tender for the execution of the Works in connection with the above named Project, we, the undersigned, offer to execute and complete such Works and remedy any faults and defects therein in conformity with the conditions spelled out in the aforementioned documents for the sum of

....
(in words ....)

or such other sums as may be ascertained in accordance with the said conditions.

2. We acknowledge that the Appendix to Tender enclosed forms part of our Tender.

3. We undertake, if our Tender is accepted, to commence the Works within the time required in the contract conditions, and to complete the whole of the Works comprised in the contract within the time stated in the Contract Conditions.

4. We agree to abide by this Tender for the period of 180 days from the submission/opening date stated in the Invitation to Tender and it shall remain binding upon us and may be accepted at any time before the expiration of that period.

5. Unless and until a Contract Agreement is signed, this Tender, together with your written acceptance thereof, shall constitute a binding contract between us.

6. We understand that you are not bound to accept the lowest or any Tender you may receive.

Dated this : .... day of ....

Signature : .... in the capacity of...........................
duly authorized to sign Tenders for and on behalf of ....
....
....
(Contractors name and address in block capitals)

End.: APPENDIX TO TENDER

APPENDIX TO TENDER

	FIDIC-Part I Clause:	
Amount of Performance Security	**10.1**	................percent of the Contract Price
Time to submit Work Programme	**14.1**	.... days after signing the contract
Minimum amount of third party insurance	**23.2**	.... per occurance with number of occurances unlimited
Commencement of Works	**41.1**	....
Time for Completion of Works	**43.1**	.... days
Amount of Penalty for Delay	**47.1**	.... per day
Limit of Penalty	**47.1**	....
Defects Liability Period	**49.1**	.... months
Advance Payment	**60.12**	................percent of the Contract Price
Minimum amount of interim certificates	**60.2**	....
Percentage of Retention	**60.3**	................percent of the Contract Price

Spaces at Clauses 41.1, 43.1 and 60.12 above to be filled in by Tenderer!

Date .... Initials of signatory of Tender ....

9.9 Minutes of Opening Tender (MOPTENDR)

Project ....

MINUTES OF OPENING TENDER

Works ....
....
Date: .... Time: .... Place: ....

No.	Invited contractor	Representative present	Tender delivered	Tender signed	Tender complete	Total amount offered
1		Yes/No	Yes/No	Yes/No	Yes/No	I.
						II.
						III.
						Total
2		Yes/No	Yes/No	Yes/No	Yes/No	I.
						II.
						III.
						Total
3		Yes/No	Yes/No	Yes/No	Yes/No	I.
						II.
						III.
						Total
4		Yes/No	Yes/No	Yes/No	Yes/No	I.
						II.
						III.
						Total
5		Yes/No	Yes/No	Yes/No	Yes/No	I.
						II.
						III.
						Total
6		Yes/No	Yes/No	Yes/No	Yes/No	I.
						II.
						III.
						Total

Remarks:
....
....

Commission members **Signatures**
....
....
....

Project ....

PARTICIPANTS OF OPENING TENDER PROCEDURE

Works ....
....
Date: .... Time: .... Place: ....

No.	Name	Company	Signature
1			
2			
3			
4			
5			
6			
7			
8			
9			
10			
11			
12			
13			
14			
15			
16			
17			
18			
19			
20			

9.10 Contract for Construction Works on Measurement Basis (recommended for contract value up to 150.000 Euro) (CONCTRMB)

CONTRACT FOR CONSTRUCTION WORKS ON MEASUREMENT BASIS	Employer's logo

The
(Name and address of Employer)
....
....
....

Date:
refer to in all correspondence:
Contract No.:

Project No.:

hereinafter referred to as the
- "Employer" -

and:

(Name and address of Contractor)
....
....
....

hereinafter referred to as the
- "Contractor" -

herewith enter into the following Contract

for the Project: ....

Country:......................

1. PURPOSE OF THE CONTRACT - SCOPE OF WORKS

The Employer awards and the Contractor takes over the execution of the following construction works:

2. CONTRACT DOCUMENTS

The priority of documents forming the Contract shall be as follows:

2.1 This Contract for Construction Works.

2.2 The Specifications

2.3 The Drawings enclosed to the Invitation to Tender, i.e.

No........... dated............. No............ dated................
No........... dated............. No............ dated................

and such drawings and details as may be issued by the Employer or his Authorized Representative for the clarification of the Works during execution.

2.4 The priced Bill of Quantities (including Daywork Rates), dated ....

3. TERMS OF EXECUTION - COMMENCEMENT OF WORKS

3.1 The Employer or his Authorized Representative shall give at least 7 days notice, in writing, prior to the date of handing-over of the site. The Contractor shall commence the Works within 5 days of the date of the handing-over of site.

3.2 The Contractor agrees to execute and to complete the Works as described in the documents listed under Clause 2 with due care and diligence in accordance with generally accepted construction practices.

3.3 The Contractor shall be obliged to observe the Laws, Bye-Laws, Ordinances and Statutes and other legal provisions of the country in which the Works are executed, in particular labour laws, local standards, public rules and regulations.

3.4 The Contractor shall submit a work programme not later than ...... weeks after the signing of this Contract.

3.5 The Contractor shall supply all building materials, equipment, plant and tools necessary for the execution of the Works in due number and time.

3.6 The Contractor shall provide all qualified and experienced labour necessary in due number and time and shall supervise their activities with due care and diligence. The Employer shall be entitled to object to and require the Contractor to remove from the Works any person employed by the Contractor who, in the opinion of the Employer, is incompetent, negligent, or guilty of misconduct.

3.7 No work shall be covered up or otherwise put out of view without prior approval in writing by the Employer or his Authorized Representative.

3.8 The Employer shall be entitled to make any variation of the form, quantity or quality of the Works or any part thereof that may, in his opinion, be necessary or desirable (cf. Clause 4.2). No such variation shall be made without an order in writing by the Employer or his Authorized Representative.

3.9 Building materials and Works may be subjected to tests at any time at the request of the Employer. These tests shall be carried out as directed by the Employer or his Authorized Representative at the place of manufacture or fabrication or on site or in a testing institute. The Contractor shall provide such assistance, materials, plant, instruments and labour as required for such test. The costs of carrying out such tests shall be borne by the Contractor.

3.10 The Contractor shall keep the site free from all unnecessary obstructions at all times and shall remove all materials and plant which are no longer required. Upon completion of the Works he shall leave the site clean and orderly to the satisfaction of the Employer or his Authorized Representative.

4. REMUNERATION - ADDITIONAL WORKS

4.1 The Employer shall pay the Contractor a Contract Price of up to

....
(in words..)

in accordance with the prices stated in the Bill of Quantities and the Works actually executed and measured. The Contract Price shall be subject to such additions and deductions as may be made under the provisions of this Contract.

4.2 The rates and prices of the Bill of Quantities shall cover all services and works of the Contractor described in the Specifications and the Drawings. Additional works shall be remunerated only if they were ordered in writing by the Employer or his Authorized

Representative and shall be valued at the prices set out in the Bill of Quantities.

4.3 If the Contract does not contain any rates or prices applicable to the extra or additional work, then suitable rates or prices shall be agreed upon between the Employer and the Contractor. In the event of disagreement, the Employer shall fix such rates or prices as shall, in his opinion, be reasonable and proper, taking into account all prevailing circumstances.

4.4 The Contractor shall invoice turnover tax if and as prescribed by law; the Employer will refund the amount in addition to the remuneration.

Amount of turnover tax *(if applicable):* ....

5. TIME FOR COMPLETION - PENALTY FOR DELAY

5.1 The Contractor shall complete the Works as listed under Clause 1 and 2 within............ days after the handing-over of site and shall request the issue of the Taking-Over Certificate at least 3 weeks prior to the date of completion.

5.2 If the Contractor should fail to achieve the completion of the Works within the period prescribed in Clause 5.1, the Contractor shall pay to the Employer a penalty of one per mille (1/1000) of the Contract Price stated under Clause 4.1 for every day of delay up to a limit of 10 % of the Contract Price.

5.3 The payment of such penalty shall not relieve the Contractor from his obligation to complete the Works or from any other obligation or liability under this Contract.

6. AUTHORIZED REPRESENTATIVE - SUPERVISION OF THE WORKS

The site supervision shall be carried out by an authorized firm or person assigned to act on behalf of the Employer and shall exercise the rights of the Employer under this Contract. The Employer herewith appoints as Authorized Representative for the execution of the Works:

....
....

7. PAYMENTS

7.1 All payments shall be made in .... *(currency)*
to the following bank and account number of the Contractor:

....
....

7.2 The parties of this Contract agree to the following payment schedule:

7.2.1 Against presentation of a bank guarantee by a bank accepted by the Employer in compliance with the specimen enclosed (see GARANTAP) the Contractor shall receive an advance payment of.......% of the Contract Price =.......................

The advance payment shall be repaid by deduction of the corresponding percentage from each payment on account.

7.2.2 Payments on account shall be made in accordance with the progress of the Works measured on site each month, in keeping with the Bill of Quantities and after certification of each invoice by the Authorized Representative.

7.2.3 Each invoice shall be submitted in duplicate and bear the project and contract number indicated on the front page of this Contract.

7.2.4 An amount of 10 % of the total of each payment on account shall be withheld by the

Employer as Retention Money.

7.2.5 After the issue of the Taking-Over Certificate (in compliance with TAKGOVER) and presentation of the final bill the remuneration due shall be paid reduced by 5 % of the total Contract Price, which shall be released after the defects liability period has expired, provided the Works are free of defects. This amount may be released against the provision of a Defects Liability Guarantee by a bank accepted by the Employer in compliance with the specimen enclosed (see GARANTDL).

8. TAKING-OVER CERTIFICATE - DEFECTS LIABILITY PERIOD

8.1 The Employer or his Authorized Representative shall issue the Taking-Over Certificate in compliance with the specimen enclosed (see TAKGOVER) within 3 weeks of the date of delivery of the Contractor’s request for its issue, provided that the whole of the Works have been completed in accordance with the Contract and to the satisfaction of the Authorized Representative.

If the Works have been completed except for minor faults or missing items, the Employer or his Authorized Representative shall include a statement in the Taking-Over Certificate, listing all faults and defects, missing items or outstanding works to be completed, including the date when all rectification and finishing works shall be completed.

8.2 The Defects Liability Period shall be twelve (12) months, starting with the date of issue of the Taking-Over Certificate.

8.3 Defects, faults, or shrinkage due to the use of materials or workmanship not in accordance with the Contract and which arise during the defects liability periodshall be made good by the Contractor immediately after notification. For these rectifications a new defects liability period shall start on their day of completion.

8.4 If the Contractor should fail to comply with his obligations under this Contract, the Employer shall be entitled to either make a deduction, claim damages or, giving four (4) weeks notice to the Contractor, employ another contractor to execute the works required for rectification and to deduct all expenses arising thereon or incidental thereto from the moneys retained according to Clause 7.2.4 or 7.2.5, or to recover these from the Contractor.

9. LIABILITY- INSURANCE

9.1 The Contractor shall be liable for all damages caused by himself, his agents or persons employed or in any way engaged by him for the execution of the Works.

9.2 Subletting of the Works under this Contract or of any part thereof shall require the express written consent of the Employer. This approval may be revoked at any time in case serious complaints arise. The Contractor shall be liable for all services performed by his subcontractors in the same manner as for his own services.

9.3 Without limiting his obligations and responsibilities under this Contract, the Contractor shall insure himself at his own expense against his liability for any material or physical damage, loss or injury which may occur to any person or property arising out of or in consequence of the performance of this Contract.

9.4 The insurance sum shall be as customary in the country where the works are to be executed.

10. TERMINATION OF THE CONTRACT

10.1 The Employer may terminate this Contract at any time either wholly or in part for individual parts of the Works.

10.2 Should the Employer terminate the Contract for a reason for which the Contractor is answerable, the Employer shall be entitled to claim compensation for damages. In this case the Employer shall remunerate only the Works already completed, provided the Employer can use them. The Employer may offset the claim for damages against the remuneration. Any other legal rights of the Employer shall remain unaffected.

10.3 Should the Employer terminate the Contract for a reason for which the Contractor is not answerable, the Contractor shall be entitled to payment for work already completed and to reimbursement of unavoidable expenses incurred prior to the date of termination.

11. ARBITRATION

All disputes arising in connection with the present Contract shall be finally settled under the Rules of Arbitration of the International Chamber of Commerce by one or more arbitrators appointed in accordance with the said rules.

12. FINAL PROVISION

This Contract shall be modified or supplemented only by written agreement.

.... (Place, Date)	.... (Place, Date)
.... The Employer	.... The Contractor *(seal, if available)*

Annexes:

- Specimen Advance Payment Guarantee (GARANTAP)
- Specimen Defects Liability Guarantee (GARANTDL)
- Specimen Taking-Over Certificate (TAKGOVER)

9.11a Specimen of Performance Guarantee (GARANTPF)

Performance Guarantee

Employer/Beneficiary:	....
Consultant:	....
Contract Date:	....
Contract No.:	....
Project No.:	....
Object of supply/performance/civil works*:	....
Contract price:	*(Currency)* ....

We hereby undertake vis-a-vis the Employer to guarantee independently fulfilment of all of the Contractor's/Consultant's* obligations arising from the afore-mentioned contract, including any incidental claims, up to the amount of

(Currency) .... (... % of the Contract Price)
(in words: ....)

Explicitly waiving all objections and defences, we undertake to render said payment upon receipt of the beneficiary's first written demand, provided that the latter states that the Contractor/Consultant* has failed to observe all or part of his contractual obligations.

This guarantee shall become effective with the date of signing the contract and shall remain valid until the date of issue of the Taking-Over Certificate.

The Employer shall return this guarantee to us as soon as its validity expires.

This guarantee shall be governed by the law of............(Country)..............The place of jurisdiction for all disputes arising from this guarantee shall be............(Town)............

.............(Place)........, ...(Date).........

....
(Signature of the guarantor) * delete what is not applicable

9.11b Advance Payment Guarantee (GARANTAP)

<u>Advance Payment Guarantee</u>

Employer/Beneficiary:	....
Consultant:	....
	....
Contract Date:	....
Contract No.:	....
Project No.:	....
Object of services/performance/works*:	....
	....
	....
Advance payment pursuant to the contract:	*(Currency)* ....

We hereby undertake vis-a-vis the Employer to guarantee independently repayment of the advance payment stipulated above, including any incidental claims, up to the amount of

(Currency) .... (... % of the Contract Price)
(in words:...)

Explicitly waiving all objections and defences, we undertake to render said payment upon receipt of the Beneficiary's first written demand, provided that the latter states that the Consultant has failed to observe all or part of his contractual obligations.

This guarantee shall become effective with the first advance payment made by the Employer, shall decrease in proportion to the reduction of monthly payments, and shall expire when the advance payment has been repaid in full.

The Employer shall return this guarantee to us as soon as its validity expires.

This guarantee shall be governed by the law of............(Country)..............The place of jurisdiction for all disputes arising from this guarantee shall be............(Town)............

.............(Place)........, ...(Date).........

....
(Signature of the guarantor) * delete what is not applicable

9.11c Guarantee for Defects Liability Period (GARANTDL)

<u>Defects Liability Guarantee</u>

Employer/Beneficiary:	....
Consultant:	....
	....
Contract Date:	....
Contract No.:	....
Project No.:	....
Object of services/performance/works*:	....
	....
	....
Contract price:	*(Currency)* ....

We hereby undertake to grant the Employer an independent guarantee for the warranty claims to which he is entitled vis-a-vis the Consultant pursuant to the afore-mentioned contract, including any incidental claims, up to the amount of

(Currency) .... (... % of the Contract Price)
(in words: ....)

Explicitly waiving all objections and defences, we undertake to render said payment upon receipt of the Beneficiary's first written demand, provided that the latter states that the Consultant* has failed to observe all or part of his contractual obligations.

This guarantee shall become effective upon the date of issue of the Taking-Over Certificate and shall expire upon the end of the Defects Liability Period.

The Employer shall return this guarantee to us as soon as its validity expires.

This guarantee shall be governed by the law of............(Country)..............The place of jurisdiction for all disputes arising from this guarantee shall be............(Town)............

.............(Place)........, ...(Date).........

....
(Signature of the guarantor)

* delete what is not applicable

9.12 Specimen of Construction Progress Report (PROGREP)

CONSTRUCTION PROGRESS REPORT No......	covering	.... *month*	.... *year*

1.	**Project Number**	....
	Name of Project	....
	Employer	....
2.	**Architect/Consultant**	....
	Supervising Consultant	....
	Site Supervisor	....

3.	Start of construction period	scheduled	actual
	Anticipated date of completion		

4.	Meteorological (hurricane, flood, frost, earthquake) or local incidences (strike, emergency or martial law, or similar) which disrupted construction activities for more than three (3) consecutive days:

5.	Contractors/subcontractors working at site during reporting period:

6.	Labor force (monthly average)	Number of engineers Number of foremen Number of skilled craftsmen Number of unskilled workers others	
		Total on site	

7.	Occurences/hinderances unexpected and unforeseen,

8.	**Progress of work** state the following data for each building/part of building or installation:		
	item of work executed	percentage of completion	ahead or behind schedule
8.1			
8.2			
8.3			
8.4			
8.5			
8.6			
8.7			
8.8			
8.9			
8.10			
8.11			
8.12			
8.13			
8.14			
8.15			
8.16			
8.17			
8.18			
8.19			
8.20	Overall completion of project		

9.	Reasons for being behind schedule under Item No.:

10.	Steps taken to overcome lack of progress under above items:

11. compiled:

....	....	....
place	date	signature

12. Enclosures:
.... sheets with photos of the construction progress

9.13 Form of Certificate of Taking-Over (TAKGOVER)

Project No:	....	
Project Title:	....	
Contract No.:	....	dated:........................
incl. Supplement	dated	dated:........................
Contractor:	....	

TAKING - OVER CERTIFICATE

(In case of partial take-over precede title by “PARTIAL”)

This is to certify that the Works of the subject contract incl. its supplement(s) have been completed to the satisfaction of the representatives named below and are being taken over as of

.... 20....

Following a joint inspection of the building(s)/installation(s) by the persons named below it has been ascertained that they have been carried out according to the Contract. Faults and defects and/or outstanding works have/have not been determined as listed on the attached sheet.

The following persons participated in the joint inspection as representative for

the Employer ....
the Engineer ....
the Contractor ....
(insert names in printed letters)

The faults and defects found and listed shall be eliminated and the outstanding Works/missing items (if any) shall be completed/installed without delay, definitely not later than

......................20....

All rights on the part of the Employer concerning liability and maintenance shall remain unaffected. The Employer reserves the right to avail himself of the contract penalty clause insofar as this has been agreed.

The execution of the Works has been commenced as of ....

With the building(s)/installation(s) completed and taken-over at the date stated above the **Defects Liability Period** commences at that same date and ends at....................

This Certificate shall be drawn up in three identical copies with one copy each for the three representatives signing below

....	....	....
Employer's Representative	Supervising Engineer	Contractor's Representative

End.: List of defects and/or outstanding works

ENCLOSURE TO TAKING-OVER CERTIFICATE

Project No:	....	
Project Title:	....	
Contract No.:	....	dated:........................
incl. Supplement	dated	dated:........................
Contractor:	....	

LIST OF DEFECTS AND/OR OUTSTANDING WORKS

1. The following faults and defects have been found and established during the joint inspection at the date of taking-over stated on the front page:

2. The following outstanding Works/missing items have been found and established during the joint inspection at the date of taking-over as above:

3. This **Partial Taking-Over Certificate** does not apply to the whole of the Contract stated above, but to the following parts/portions of work only:

....	....	....
Employer's Representative	Supervising Engineer	Contractor's Representative

9.14 Form of Certificate of Handing-Over (HNDGOVER)

This is to certify that the following works for the project named below have been completed to the full satisfaction of the representatives listed in the Minutes of the Handing-Over and are being handed over to and accepted by the authorized representative of the counterpart authority in the recipient country as of

Project No:	.... 20...........
Project Title:	....
Works:	.... Remaining defects and outstanding works affecting the warranty of the contractor(s) have/have not been determined as stated in the **Minutes of Handing-Over** enclosed.

Upon this handing-over of the works all rights and obligations concerning the works are transferred to the counterpart authority in the recipient country.

The Project Agreement between the Government of the Federal Republic of Germany and the

Government of ....dated.................... shall remain unaffected and the works shall be at the unlimited disposition of the experts delegated by the GTZ to the promoted project for the implementation and completion of their duties and tasks.

....	....
Place	Date
Handed over by	Accepted by
....	....
Signature and name in printed letters of the authorized representative of the Employer	Signature and name in printed letters of the authorized representative of the counterpart authority

End.: Minutes of the Handing-Over

MINUTES OF THE HANDING-OVER

The handing-over of the

Works:	....
of	
Project No:	....
with the	
Project Title:	....

as of....................., 20..... has been accomplished by the following team of representatives present and authorized to sign for the:

	name in printed letters	*initial:*
Employer	....	....
Counterpart Authority	....	....
Usufructuary	....	....
German Embassy (if applicable)	....	....

Following a joint inspection of the works it has been ascertained that they have been completed as approved and are ready for use. Defects, deficiencies and outstanding works, all covered by contractors liability, were established as follows:

1. Faults and Defects at

1.1 Building/Installation

1.2. Exterior Facilities (if applicable)

2. Outstanding Works/Missing Items

2.1 Building/Installation

2.2 Exterior Facilities (if applicable)

3. Remarks:

With this certificate the following documents are handed-over to the authorized representative of the counterpart authority:

- one (1) set of as-built drawings,

- one (1) copy of the Taking-Over Certificate as of.............20.....,

- one (1) copy of the Acceptance Certificate of the electrical installations and equipment, incl. the record of inspection,

- complete set of operating instructions and maintenance manuals for electrical/mechanical equipment (if applicable)

....	....
For the Employer	For the counterpart authority

9.15 FIDIC-Part I, Conditions of Contract for Works of Civil Engineering Construction (recommended for contract value above 150.000 Euro) Website Information (FIDIC-P1).

Information on FIDIC Publications (from Internet website "http://www.fidic.org")

FIDIC publishes:

• Information about FIDIC, with such booklets as FIDIC Info, a small information/address book published annually, and FIDIC Statutes and Bylaws.

• Information for clients, including the International Directory of Consulting Engineers (published every two years, and which is also available online at www.fidicdirect.com, Quality Based Selection, FIDIC Tendering Procedure and other valuable documents about the use of consulting engineers.

• Information for Consulting Engineers, with manuals/guides on topics such as risk management, environment, transfer of technology, quality management, dispute resolution techniques, insurance, law and other business issues.

<u>Contracts/Agreement</u>

The "backbone" of the body of FIDIC's publications is FIDIC's selection of contracts and agreements. FIDIC publishes Conditions of Contract for:

• Works of Civil Engineering Construction (The Red Book)
• Construction Contract (NEW: updates the Red Book)
• Electrical & Mechanical Works (The Yellow Book)
• Design-Build and Turnkey (The Orange Book)
• Plant and Design Build Contract (updates Yellow Book and Orange Book)
• EPC/Turnkey Projects
• The Short Form

These documents are available in printed and electronic versions, and a short text tells you how to choose the right contract.

All FIDIC contracts standard conditions of contract between a client/employer and a contractor. The consulting engineer is not a party to these contracts, but plays a role as the employer's representative to see that the contract is properly carried out.

Additionally, FIDIC publishes a Client/Consultant Model Services Agreement (The White Book), which is the agreement often used by the client when appointing a consultant as his employer's representative for the above contracts.

This "rainbow" of FIDIC contracts/agreements provides the major portion of the total income from publication sales to FIDIC.

FIDIC's volunteer committees, who draft nearly all of FIDIC's documents, are continuously drafting or revising, keeping FIDIC's Publications informative and up-to-date.

Representation Impact

Equally important for FIDIC is the representation/image impact of its publications. Most people first learn about the Federation by reading or using its business practice publications or standard conditions of contract. FIDIC's "quality image" is enhanced by its publication of quality documents.

The most pronounced example of this image impact is FIDIC's Conditions of Contract for Works of Civil Engineering Construction ("The Red Book", owing to its red cover), now in its fourth edition. Many people call the Red Book "FIDIC" or "the FIDIC", mistakenly using the Federation's acronym (taken from its original French name, Fédération Internationale des Ingénieurs-Conseils) for its best known publication, unaware of the Federation, but certainly aware of its Red Book.

This confusion is not surprising, when one considers that the Red Book is used as the general conditions in standard bidding documents of many development banks, including the World Bank.

Financial Impact

FIDIC's publications fulfil an important and essential role for the well being of the Federation. Revenues from publication sales account for nearly half of FIDIC's income, with most of the other half coming from Member Association (MA) subscriptions.

FIDIC's annual income from publications has grown from about SFr. 300,000.- in the late 1980's to more than SFr. 900,000.- today. This growth in publications sales has allowed FIDIC to reduce the unit rates for membership subscriptions by nearly one-half over the past decade, an important impact when one considers that more than half of FIDIC's Member Association's are in developing countries, many of which have weak currencies.

With FIDIC being a non-profit, self-supporting Federation, which neither seeks nor accepts financial support from any other body, the essential role played by its publications sales cannot be over emphasized.

Ordering

All FIDIC documents can be ordered online at the FIDIC.org Bookshop. The Bookshop gives details such as:

- Overview of contents.

- Translations: All FIDIC documents are published in English and depending upon the need, in other languages (but English remains the language of reference in case of legal dispute - see FIDIC Policy on Translations). However, other organizations often undertake to translate FIDIC documents, especially conditions of contract. The Bookshop indicates the translations that are available and where they can be obtained if they are not stocked by the Bookshop

- Prices: all prices are in Swiss francs and special offers are available for orders exceeding the minimum order provided more than three items are ordered.

International Federation of Consulting Engineers
FIDIC Bookshop- BP 86 • CH-1000 Lausanne 12 • Switzerland
Tel +41-21-654 44 15 • Fax +41-21-654 44 17• fidic.pub@fidic.org • FIDIC Bookshop

9.16 FIDIC-Part II, Conditions of Particular Application (as an example), drafted by the GTZ (FIDIC-P2), to be adapted to the specific project conditions.

CONDITIONS OF CONTRACT

PART II - CONDITIONS OF PARTICULAR APPLICATION

The following clauses of Part I of the “Conditions of Contract for Works of Civil Engineering Construction” (FIDIC), Fourth Edition 1987, reprinted with amendments 1992, prepared by the Fédération Internationale des Ingénieurs-Conseils, shall be supplemented, modified, deleted or added as follows:

Sub-Clause 1.1 - Definitions

(a) (i) The Employer is	....
	....
	....
	....
	....
(a) (iv) The Engineer is	....
	....
	....
	....
	....

The Employer is entitled to replace the Engineer at any time without the consent of the Contractor. In such a case the Employer shall notify the Contractor in writing without undue delay.

(b) (vi) “Letter of Acceptance”:

Sub-Paragraph (b) (vi) shall be added by the following:

“In case no Letter of Acceptance is issued all references to the Letter of Acceptance shall be deemed to be made to the Contract Agreement referred to in Sub-Clause 9.1.”

<u>Sub-Clause 2.1 - Engineer’s Duties and Authority</u>

Paragraph (b) of Sub-Clause 2.1 shall be amended as follows:

“(i) The Engineer shall obtain the specific approval of the Employer in writing before carrying out any of the following actions as specified in Part I:

(1) consenting to subcontracting of any part of the Works pursuant to Clause 4.1,

(2) determination of any extension of time pursuant to Clause 12.2 (a),

(3) determination of any additional costs pursuant to Clause 12.2 (b),

(4) issuing a Taking-Over Certificate pursuant to Clause 48.1,

(5) making any variation pursuant to Clause 51.1, unless the accumulated costs of the variations do not surpass ten (10) percent of the original Contract Price,

(6) fixing rates or prices pursuant to Clause 52, including provisional rates and prices,

(7) determining increased costs arising from special risks pursuant to Clause 65.5,

(8) determining any sums payable pursuant to Clause 65.8 in the event that the contract is being terminated.

(ii) Notwithstanding the obligation, as set out above, to obtain approval, if, in the opinion of the Engineer, an emergency occurs affecting the safety of life or of the Works or of adjoining property, he may, without relieving the Contractor of any of his duties and responsibilities under this Contract, instruct the Contractor to execute all such work or to do all such things as may, in the opinion of the Engineer, be necessary to abate or reduce the risk. The Contractor shall forthwith comply, despite the absence of approval of the Employer, with any such instruction of the Engineer. The Engineer shall determine an addition to the Contract Price, in respect of such instruction, in accordance with Clause 52 and shall notify the Contractor accordingly, with a copy to the Employer."

Sub-Clause 2.2 - Engineer's Representative

Sub-Clause 2.2 shall be deleted and substituted by:

"The Engineer's Representative shall be appointed by and be responsible to the Engineer. The Engineer's Representative shall either be a representative of the local representation of the Engineer or an expert seconded by the Engineer. Any appointment or revocation of the Engineer's Representative requires the specific written approval of the Employer and shall not take effect until a copy thereof has been delivered to the Contractor."

Sub-Clause 2.3 - Engineer's Authority to Delegate

Sub-Clause 2.3 shall be deleted and substituted by:

"Any communication given by the Engineer's Representative to the Contractor shall have the same effect as though it had been given by the Engineer."

Sub-Clause 2.4 - Appointment of Assistants

Sub-Clause 2.4 shall be deleted entirely.

Sub-Clause 2.5 - Instructions in Writing

In the last sentence the following words shall be deleted:

"and any assistants of the Engineer or the Engineer's Representative appointed pursuant to Sub-clause 2.4."

Sub-Clause 3.1 - Assignment of Contract

Sub-Clause 3.1 shall be deleted and substituted by the following:

"The Contractor shall not, without prior consent of the Employer (which consent shall be at the sole discretion of the Employer) assign the Contract or any part thereof or any benefit or interest therein or thereunder."

Sub-Clause 5.1 - Language and Law

(a) The language is English.

(b) The law is that in force in.................*(Country)*..................

Sub-Clause 5.2 - Priority of Contract Documents

The list of documents shall be deleted and substituted by the following:

(1) the Contract Agreement, if completed;
(2) the Letter of Acceptance, if issued;
(3) the Tender with Appendix;

(4) the Conditions of Contract Part II;
(5) the Conditions of Contract Part I;
(6) the Specifications;
(7) the Drawings; and
(8) the priced Bill of Quantities.

Sub-Clause 10.1 - Performance Security

The third phrase of Sub-Clause 10.1 shall be deleted and substituted by:

“Such security shall be in accordance with the specimen “Performance Guarantee” annexed to these Conditions.”

Sub-Clause 10.3 - Claims under Performance Security

Sub-Clause 10.3 shall be deleted entirely.

Sub-Clause 13.1 - Works to be in Accordance with Contract

The last phrase of Sub-Clause 13.1 shall be deleted and substituted by:

“The Contractor shall take instructions only from the Engineer or, subject to the provisions of Clause 2, from the Engineer’s Representative.”

Sub-Clause 14.1 - Programme to be Submitted

The words “in Part II of these Conditions after the date of the Letter of Acceptance” in the first and second line shall be substituted by “in the Appendix to the Tender”.

Sub-Clause 14.3 - Cash Flow Estimate to be Submitted

Sub-Clause 14.3 shall be deleted entirely.

After Sub-Clause 15.1 - Contractor’s Superintendent

The following Sub-Clause 15.2 shall be added:

“15.2 - Language Ability of Contractor’s Representative

The Contractor’s representative shall have command of the contract language according to Sub-Clause 5.1 (a).”

Sub-Clause 20.4 - Employer’s Risks

The definition of Sub-Clause 20.4 shall be preceded by the paragraph:

“The Employer’s risks are limited to those related to the country where the Permanent Works are to be executed. The present political situation is well known to both parties and shall not be considered an Employer’s risk; thus it shall not justify any claim, additional payment or any extension of time.”

Sub-Clause 21.1 - Insurance of Works and Contractors Equipment

The following phrase shall be added to Paragraph (a):

“,it being understood that such insurance shall provide for compensation payable in those types and proportions of currencies required to rectify the loss or damage incurred.”

Sub-Clause 21.2 - Scope of Cover

The words “from the start of work at the Site” in Paragraph (a) shall be deleted and substituted by: “from the date fixed for the Commencement of Works under Sub-Clause 41.1”.

After Sub-Clause 25.4 - Compliance with Policy Conditions

The following Sub-Clause 25.5 shall be added:

“25.5 - Source of Insurance

The Contractor shall be entitled to place all insurance relating to the Contract (including, but not limited to, the insurance referred to in Clauses 21, 23 and 24) with insurers approved by the Employer.”

After Sub-Clause 26.1 - Compliance with Statutes. Regulations

The following Sub-Clauses 26.2 and 26.3 shall be added:

“26.2 - Agreements between........................and the recipient country

The works under this Contract shall be carried out observing the Bilateral Agreement for Technical Co-operation and the Project Agreement between ....and the recipient country. These agreements provide inter alia that the import of equipment and materials required for the Contract Works will be free of any custom duties, taxes, or any other official charges.

26.3 - Violation of Agreements

Each and every case of violation of the aforementioned Agreements shall be reported by the Contractor to the Employer immediately.”

Sub-Clause 30.3 - Transport of Materials or Plant

Sub-Clause 30.3 shall be deleted entirely.

After Sub-Clause 34.1 - Engagement of Staff and Labour

The following Sub-Clauses 34.2 to 34.5 shall be added:

“34.2 - Health and Safety

Due precautions shall be taken by the Contractor at his own cost to ensure the health and safety of his staff and labour in collaboration with and to the pertaining requirements of the local health authorities, labour laws, welfare and hygiene requirements.

34.3 - Alcoholic Liquor or Drugs

The Contractor shall not, otherwise than in accordance with the Statutes, Ordinances and Government Regulations or Orders for the time being in force, import, sell, give, barter, or otherwise dispose of any alcoholic liquor and/or drugs, or permit or suffer by his Subcontractors, agents, staff or labour to do so.

34.4 - Arms and Ammunition

The Contractor shall not give, barter, or otherwise dispose of to any person or persons, any arms or ammunition of any kind or permit or suffer the same as aforesaid.

34.5 - Disorderly Conduct

The Contractor shall at all times take all reasonable precautions to prevent any unlawful, riotous, or disorderly conduct by or amongst his staff and labour and for the preservation of peace and protection of persons and property in the neighbourhood of the Works against the same."

Sub-Clause 36.2 - Cost of Samples

A full stop shall be inserted after "at his own cost" and the remainder of the sentence shall be deleted.

Sub-Clause 41.1 - Commencement of Works

The first sentence of Sub-Clause 41.1 shall be deleted and substituted by:

"The Contractor shall commence the Works on the date stated in the Appendix to Tender."

Sub-Clause 42.1 - Possession of Site and Access Thereto

In the third line of Paragraph (b) the words "with the Engineer's notice to commence the Works," shall be substituted by "upon the contractually agreed date of commencement of the Works,"

Sub-Clause 44.2 - Contractor to Provide Notification and Detailed Particulars

In the first line of the Paragraph (b) the words "or such other reasonable time as may be agreed by the Engineer," shall be deleted.

Sub-Clause 47.1 - Liquidated Damages for Delay

The Sub-Clause 47.1 shall be deleted and substituted by:

"47.1 - Penalty

If the Contractor fails to comply with the Time for Completion in accordance with Clause 48 for the whole of the Works or, if applicable, any Section within the relevant time prescribed by Clause 43.1, then the Contractor shall pay to the Employer the relevant sum stated in the Appendix to Tender as a penalty for every day which shall elapse between the relevant Time for Completion and the date stated in the Taking-Over Certificate of the whole of the Works or the relevant Section, subject to the applicable limit stated in the Appendix to Tender. The Employer may, without prejudice to any other method of recovery, deduct the amount of such penalty from any monies due to or to become due to the Contractor. The payment or deduction of such penalty shall not relieve the Contractor from his obligations to complete the Works, or from any other of his obligations and liabilities under this Contract, namely for damages caused by delay."

Sub-Clause 47.2 - Reduction of Liquidated Damages

The Sub-Clause 47.2 shall be deleted and substituted by:

"47.2 - Reduction of Penalty

If, before the Time of Completion of the whole of the Works or, if applicable, any Section, a Taking-Over Certificate has been issued for any part of the Works or for a Section, the penalty for delay in completion of the remainder of the Works or of that Section shall, for any period of delay after the date stated in such Taking-Over Certificate, and in absence of alternative provisions in the Contract, be reduced in the proportion which the value of the part so certified bears to the value of the whole of the Works or Section, as applicable. The provisions of this Sub-Clause shall apply to the rate of penalties only and shall not affect the limit thereof."

Sub-Clause 48.1- Taking-Over Certificate

Sub-Clause 48.1 shall be preceded by the following sentence:

"The Taking-Over-Certificate shall be issued by the Employer unless he authorises the Engineer in writing to issue such a Certificate."

After Sub-Clause 49.4 - Contractor's Failure to Carry Out Instructions

The following Sub-Clauses 49.5 to 49.7 shall be added:

"49.5 - No Engineer under contract

In case that there is no Engineer under contract during the defects liability period, the Employer shall assume all functions of the Engineer referred to in Clauses 49 and 50.

49.6 - Limitation of action

The Employer's right to demand that the Contractor make good any defect after notification thereof shall become statute-barred two years after that notification.

49.7 - Defects liability period for subsequent improvement works

In respect of the Works undertaken to make good defects, the defects liability period shall begin anew on the day on which those works have been acceptably completed. A certificate pursuant to Sub-Clause 48.1 shall establish that the Work has been completed in proper form."

Sub-Clause 52.2 - Power of the Engineer to Fix Rates

After the first full paragraph the following paragraph shall be added:

"Provided further that no change in the rate or price for any item contained in the Contract shall be considered unless such item accounts for an amount of more than two (2) percent of the Contract Price and the actual quantity of work executed under the item exceeds or underruns the quantity stated in the Bill of Quantities by more than 25 percent."

Sub-Clause 53.2 - Contemporary Records

The word "necessarily" in the third line shall be deleted.

Sub-Clause 53.3 - Substantion of Claims

The words ", or such other reasonable time as may be agreed by the Engineer" shall be deleted.

Sub-Clause 53.4 - Failure to Comply

Sub-Clause 53.4 shall be deleted and substituted by:

"If the Contractor fails to comply with any of the provisions of this Clause in respect of any claim which he seeks to make, he shall not be entitled to any payment in respect thereof."

Sub-Clause 60.1 - Monthly Statements

At the end of the first line the number "six" shall be substituted by "two" and Paragraph (c) shall be deleted entirely.

Sub-Clause 60.2 - Monthly Payments

In Paragraph (b), within the first line, the phrase", other than pursuant to Clause 47," shall be deleted.

Sub-Clause 60.3 - Payment of Retention Money

The following Paragraph (c) shall be added:

(c) The Employer shall pay the other half of the Retention Money mentioned in Paragraph (b) before the expiration of the Defects Liability Period for the Works against presentation of a Defects Liability Guarantee conforming with the annexed specimen and issued by a bank approved by the Employer.

Sub-Clause 60.6 - Final Statement

Sub-Clause 60.6 shall be deleted and substituted by:

"The Statement at Completion shall be deemed as the Final Statement."

Sub-Clause 60.7 - Discharge

Sub-Clause 60.7 shall be deleted entirely.

Sub-Clause 60.8 - Final Payment Certificate

The number "28" shall be substituted by "56" and the words ", and the written discharge" in the first line, "finally" in the first line of Paragraph (a) and ", other than under Clause 47" in the second line of Paragraph (b) shall be deleted.

Sub-Clause 60.9 - Cessation of Employer's Liability

A full stop shall be inserted after "Final Statement" and the rest of the sentence be deleted.

Sub-Clause 60.10 - Time for Payment

The Sub-Clause 60.10 shall be deleted and substituted by:

"Any amount due to the Contractor shall be paid by the Employer to the Contractor within 45 days after receipt of an Interim Payment Certificate or the Final Certificate issued by the Engineer."

After Sub-Clause 60.10 - Time for Payment

The following Sub-Clauses 60.11 and 60.12 shall be added:

"60.11 - Place of Payments

The place of performance for all payments shall be..."

60.12 - Advance Payment

An advance payment according to the amount stated in the Appendix to Tender shall be made by the Employer against the provision of an Advance Payment Guarantee by the Contractor according to the specimen annexed to these conditions. The bank providing such guarantee shall be subject to the Employer's approval.

The advance payment shall be written down by the Contractor by way of proportional reductions in any interim certificate and the Final Certificate, until the amount paid in advance has been written down to nought. The proportion of each reduction shall correspond to the relation of the advance payment to the total Contract Price."

Sub-Clauses 61.1. 62.1 and 62.2

Sub-Clauses 61.1, 62.1, and 62.2 shall be deleted entirely and substituted by:

"61.1 - Completion of the Contract

A Defects Liability Certificate shall not be issued. The Contract shall be considered as completed in full as soon as the Defects Liability Period has passed without any notice of defects or as soon as any works instructed pursuant to Clause 49 and 50 have been completed to the satisfaction of the Employer. The Defects Liability Guarantee shall be returned accordingly, if applicable."

Sub-Clause 65.7 - Removal of Contractor's Equipment on Termination

After the words "Sub-Clause 65.6," the words "or Sub-Clause 65.9" shall be added.

After Sub-Clause 65.8 - Payment if Contract Terminated

The following Sub-Clause 65.9 shall be added:

"65.9 - Termination of Contract at Employer's Convenience

The Employer shall be entitled to terminate this Contract at any time at his convenience by giving notice to the Contractor, with a copy to the Engineer. Such termination shall have immediate effect unless otherwise stated in said notice. In the event of such a termination, the Contractor shall

(a) proceed as provided under Sub-Clause 65.7, and
(b) be paid by the Employer as provided under Sub-Clause 65.8."

After Sub-Clause 66.1 - Payment in Event of Release from Performance

The following Sub-Clause 66.2 shall be added:

"66.2 - Partial Impossibility

If such circumstances as mentioned in Sub-Clause 66.1 render it impossible or unlawful for the Contractor to fulfil part of his obligations, Sub-Clause 66.1 shall apply mutatis mutandis. In such a case the Employer shall be entitled to terminate the Contract if he does not have an interest anymore in the fulfilment of the part not affected by such circumstances, but shall pay the Contractor according to Sub-Clause 65.8."

Sub-Clause 69.1 - Default of Employer

Paragraph (b) shall be deleted and the following phrase shall be added at the end of the Sub-Clause:

"A termination under Paragraph (a) requires a prior written reminder of the payment due, giving a reasonable time limit."

Sub-Clause 69.3 - Payment on Termination

The following sentences shall be added at the end:

"In any case, such payment shall be limited to the total Contract Price. However, the Contractor is obliged to take all necessary steps to minimise the damage."

Sub-Clause 69.4 - Contractor's Entitlement to Suspend Work

The words "to interest under Sub-Clause 60.10 and" shall be deleted and the following paragraph shall be added after the first full paragraph:

"However, any suspension of work or reduction of rate of work requires a prior written reminder of the payment due, giving a reasonable time limit."

Clause 70 - Changes in Cost and Legislation

The Sub-Clauses 70.1 and 70.2 shall be deleted entirely and substituted by:

"70.1 - Fixed Prices

The Contract Prices are fixed prices for the term of this Contract and shall not be subject to any adjustment in respect of rise or fall in the cost of labour, materials, or any other matters affecting the costs for the execution of this Contract."

Sub-Clause 71.1 - Currency Restrictions

The Sub-Clause 71.1 shall be deleted entirely.

Sub-Clause 72.2 - Currency Proportions

The whole text following the word "shall," (fifth line) shall be deleted and substituted by: "be as stated in the Appendix to Tender."

After Clause 72.3 - Currencies of Payment for Provisional Sums

The following Clauses shall be added:

"Clause 73.1 - Bribery and Agreements to Restrain Competition

If the Contractor or any of his sub-contractors, agents, or servants offer to give or agree to or give to any person any bribe, gift, gratuity, or commission as an inducement or reward for doing or forbearing to do any action in relation to the Contract or any other contract with the Employer or for showing or forbearing to show favour or disfavour to any person in relation to the Contract or any other contract with the Employer, then the Employer may enter upon the Site and the Works and terminate the employment of the Contractor and the provisions of Clause 63 thereof shall apply as if such entry and termination had been made pursuant to that clause. The same shall apply if the Contractor has taken part in agreements to restrain competition in order to obtain the contract or if he has made incorrect statements in the Tender Documents."

Clause 74.1 - Details to be Confidential

The Contractor shall treat the details of this Contract as private and confidential, save in so far as may be necessary for the purpose thereof, and shall not publish or disclose the same or any particulars thereof in any trade or technical paper or elsewhere without the prior consent in writing of the Employer. If any dispute arises as to the necessity of any publication or disclosure for the purpose of the Contract the same shall be referred to the decision of the Employer whose award shall be final."

Clause 75.1 - Joint and Several Liability

If the Contractor is represented by a joint venture of two or more persons, all such persons shall be jointly and severally bound to the Employer for the fulfilment of the terms of the Contract and shall designate one of such persons to act as leader with the authority to bind the joint venture. The composition or the constitution of the joint venture shall not be altered without the prior written consent of the Employer."

Clause 76.1 - Invalidity

The invalidity of one or several provisions of the Contract shall not affect the validity of the remaining provisions. Invalid provisions shall be substituted by such provisions as are closest to the economic purpose aimed at by both contracting parties.”

10. Glossary

Backstopping

Accompanying professional and technical support.

Cash for Work

Remuneration for work (minimum wage level), in order to strengthen the buying power of many households. It is closely linked to “food-for-work”, an instrument of food security with the aim of alleviating acute nutritional deficits, mobilising self-help and enhancing nutritional support activities. It is frequently applied in integrated food security programmes (IFSP), which, depending on the situation, can be a combination of food- and cash-for-work, operational inputs-for-work and equipment-for-work, as well as foodstuffs for participating in training programmes (food-for-training).

Conflicts

Conflicts are a common component of world politics, as well as of the politics within communities and states. They result from real or supposed contrasting interests. When two or more actors actively propagate their contradicting interests a conflict develops. Conflicts are usually local or regional, and rarely affect an entire country.

Conflict management

is the attempt to influence the course of a conflict by regulation, prevention of violence and finding a means of settlement. It aims at bringing about constructive solutions from which all parties can benefit.

Contract for construction works on measurement basis

A contract based on specifications of building works subdivided into individual works with agreed unit prices. Accounts are settled according to actual measurements and quantities of the materials used and work accomplished (in contrast to a lump sum contract).

Crisis prevention

incorporates early, planned, systematic and coherent action at different levels of state and society in order to prevent violent conflicts. Activities conceived to prevent crises aim to reduce the potential for increased violence, before, during or after a violent conflict, and to promote the development of institutions, structures and “cultures” to settle disputes with peaceful means.

Development-oriented emergency aid

Development-oriented emergency aid (DEA) encompasses all measures, initiatives and reactions to emergency situations in crises, conflicts and disasters and their prevention. The aim is to contribute to a reduction of the endangering and vulnerability of people - at household level, as well as regional and national levels - or to alleviate the effects of disasters: either by precautionary measures to avoid or by managing existing emergency situations.

Disaster

A disaster is an disruption in the normal functioning of a society, which leads to loss of human lives, property and environmental resources, and which exceeds the ability of the affected communities to cope using only its own resources. There are three types of disasters: man-made disasters (caused by technological failures), natural disasters and conflicts. They can occur suddenly, over a certain period of time, or exist permanently.

Disaster risk assessment

This means the recording of disaster risks (potential threat, including statistical frequency of hazards) in a given region over a given period of time. The aim is to assess the probability of occurrences, the estimation of potential losses (number of dead and injured, damage of property, interruption of economic activity) and a disaster alleviating information system and evaluation (e.g. demarcation of endangered areas, establishment of early warning systems).

Disaster risk management

Disaster risk management includes measures to avoid disasters and to reduce the effects of disasters.

FIDIC

The FIDIC selection of contracts and agreements contain internationally accepted contract conditions and guidelines for the execution of building works worldwide. They are published by "Fédération Internationale des Ingénieurs-Conseils (FIDIC)" in two parts. Part 1 contains the general conditions, while Part 2 is concerned with the special clauses of the project and therefore has to be adapted to the specific conditions of the project in question. Further information and order forms can be found in the Internet under "www.fidic.net".

Financial cooperation

Financial Cooperation (FC; formally known as "capital aid") is an instrument of bilateral development cooperation. Its task is to provide capital which will make better use of, or boost, the production potential of developing countries, including their economic and social infrastructure. Through FC, funds are made available to partner countries in the form of soft loans or non-repayable financial contributions. Emphasis is on investment, not on advisory services. Unlike TC, FC is thus a means of financing and not a direct contribution. The Kreditanstalt für Wiederaufbau (KfW) is responsible for handling German Financial Cooperation on behalf of the Federal German Government.

Financing agreement (GTZ)

Financing agreements are agreements based on international law to provide a project of a partner with non-repayable, tied contributions of the GTZ from funds of the Federal German Government. Financial contributions are not direct contributions. They are provided where there is a competent local executing agency which is in a position to assume full responsibility for the proper planning and implementation of the project. Construction work, for instance, is usually supported through financial contributions. To handle a financial contribution, the GTZ enters into a financing agreement with the partner.

General contractor

Unlike the non-commercial general contractor (NGC), the general contractor carries out considerable parts of the works with his own resources (e.g. in his capacity as building contractor, construction of the building carcass) and sub-contracts other works to third parties.

Housing development

The housing development referred to here is concerned with temporary buildings and settlements with technical services and social facilities of varying standards. Depending on the standard of finish, level of investment and regional plans, the aim should be to achieve a certain degree of sustainability, such that, when the buildings are dismantled, at least a part of the technical systems (sewage, water supply, power supply, roads, or parts of them) can be reused in the case of a new development.

Immediate relief

Relief measures, that are implemented directly after a disaster or war, are called immediate relief. This immediate relief serves to ensure the instantaneous survival of the affected population.

Involvement/Participation

In development cooperation the term “participation” refers to the process, in which various actors share and negotiate control over development initiatives, and the decisions and resources associated with them. Participation as a management principle is based on the now widely acknowledged insight that processes of change are all the more successful, the more intensively the actors are appropriately involved in the design of project objectives and measures. Depending on the project type and phase, different degrees of participation may be appropriate.

Lump sum contract

A fixed price (or lump sum) is based on specifications of services to be rendered, for which a “fixed” price, i.e. an unalterable price, has been agreed. The “fixed” price necessitates a precise description of services and/or plans and drawings of a building project, which may be deviated from only marginally during execution. In the case of major deviations the additional costs have to be negotiated, or new services have to be paid for.

Non-commercial general contractor (NGC)

The NGC or implementing consultant “takes over” the responsibility for achieving the objectives of a project and is answerable to the financing agency for the services as a whole. He is less concerned with “undertaking” the professional implementation himself, but instead sub-contracts these services to professionals of the local or international building industry.

Nucleus model

In the case of a nucleus model, only the central core of a house, or only the main and essential rooms, installations and building components are constructed or repaired. All the rest is carried out by the owner at his/her own cost.

Ownership

The term “ownership” is used in today’s development policy debate to designate identification with the project, along with the motivation to assume responsibility for development initiatives and processes of change. It is also used to remind people of the subsidiarity of external support. Today, ownership in the above sense is considered an important precondition for the efficiency and sustainability of development processes, and in TC is one of the key quality indicators. It should be ensured that “ownership” exists, or is achieved in the course of a project, both within the partner organisation(s) and among the target groups and their institutions.

Project executing organisation

The project executing organisation is the legal entity responsible for human resources, financial and technical aspects of implementing a TC-supported project in the partner country. It may be state-run, parastatal or non-governmental. A project may imply cooperation with several project executing agencies, each with clearly defined responsibilities for specific components of implementation (responsibility for implementation) which do not overlap. In some cases the project executing organisation can engage third parties (private companies, institutions, groups or individuals) to provide the services agreed upon.

Project management

Action and responsibility for a technically and commercially/economically immaculate execution and accounting of a (building) project.

Rapid assessment

Investigations of one or more experts on location to determine the possibility of implementation and conception of a project from a technical point of view, taking into consideration the different requirements of the parties involved, and estimation of the time frame and costs.

Rehabilitation and reconstruction

The term rehabilitation includes measures that are taken up after a disaster, quite often directly after a phase of humanitarian aid and before the period of reconstruction, in order to restore existential social functions, which are needed to provide the basis for the ensurance of survival of the people with their own human and material resources.

Reconstruction leads to the complete restoration of a functioning society, economy and environment. In the process, the aim should be to regain the quality of life, or even exceed it, in comparison to the living conditions before the disaster. This should happen with regard to preventive measures against future risk situations.

Self-help

Self-help means people endeavouring to achieve goals through their own efforts. It is an individual or collective response to objective emergencies, or to situations perceived to be unsatisfactory, which people seek to overcome by sustainably improving their living conditions and increasing their self-reliance. Self-help efforts can involve changing a material situation or influencing political and social framework conditions. Help towards self-help is characterised by the following principles:

- The beneficiaries' own efforts are not substituted and the promoted individuals and groups are not exonorated from responsibility.

- Existing initiatives are strengthened; external promotion may not go beyond providing initial stimulus.

- The participation of affected persons and groups in all decision-making within the scope of the cooperation is a necessary precondition.

- Promotion is geared primarily to groups.

- The decision as to what constitutes the maximum possible self-help and the minimum necessary external support is the subject of dialogue with the beneficiary individuals or groups. In emergencies, it is displaced in favour of external aid, such that the proportion of self-help is reduced accordingly.

Significance

Does the project generate broad-based sectoral and/or regional impacts, can it be used as a model, and is it replicable in other sectors or countries? Does it contribute to institution-building and/or institutional development of the relevant sub-systems? The opposite of significant projects are so-called "island" projects, i.e. isolated projects which do not impact significantly on their wider environment.

Sustainability

This denotes a balance between the needs of the present generation and the living perspectives of future generations. With reference to projects, it describes the extent to which the partner organisations and target groups are willing and able to self-reliantly continue and further develop the innovations effected by the project. As a decisive quality criterion, sustainability presupposes in particular that

- the partner organisations designated to implement the project have the required qualifications,
- the effects of the project correspond with the needs of the target group,
- the services expected from the partners lie within their capabilities and
- the implementation is also justified under economic aspects.

Technical cooperation

The goal of technical cooperation is to enable people and organisations in partner countries to improve their living conditions on their own responsibility and through their own efforts. To this end, technical, economic and organisational skills and expertise are transferred within the scope of TC. Technical cooperation projects are implemented free of charge.

VOB - German contracting rules for award of public works contracts

The VOB is published by DIN (German Standards Institute) on behalf of the German Committee for the Award of Public Works Contracts. It comprises three parts:

- VOB Part A: General conditions for the award of contracts for building works;
- VOB Part B: General contract conditions for the execution of building works. These are general terms of business, which supplement the works contract law of the BGB (German Civil Code) with the necessary conditions specific to building works;
- VOB Part C: General technical contract conditions for building works.

Vulnerability

The vulnerability of a society is determined by such circumstances and influencing factors, that cause the existing resources and potentials of societies, population groups and individuals to be inadequate for the solution of problem situations by their own means, thus making them unable to prevent the occurrence of a disaster. The degree of vulnerability determines the degree of damage that results from a disaster. The basic cause of vulnerability can lie in socio-economic, political and ecological instability, or a combination of these factors.

Warranty

is the guarantee for a faultlessly executed piece of work continuously over a fixed period of time. In the case of building measures in emergencies, the warranty period should, depending on the situation, cover at least one year, or better still two years. In Germany it has recently been extended to 5 years for building projects.

11. Abbreviations

AA	Federal Foreign Office
BMZ	Federal Ministry for Economic Cooperation and Development
ECHO	European Community Humanitarian Office
EU	European Union
DC	Development cooperation
DEA	Development-oriented emergency aid
FA	Financing agreement
FC	Financial cooperation
FIDIC	Fédération Internationale des Ingénieurs-Conseils
GO	Government organisation
GTZ	German Technical Cooperation
HOAI	German fee scale for architects and engineers
IFRC	International Federation of Red Cross and Red Cresent
KfW	(Kreditanstalt für Wiederaufbau) The German Development Bank
NGC	Non-commercial general contractor
NGO	Non-governmental organisation
O + R	(GTZ-internal) orientations and rules
OCHA	United Nations Office for the Coordination of Humanitarian Affairs
SWIFT	Money transfer system within the "Society for Worldwide Inter-bank Financial Telecommunication"
THW	German Federal Agency for Technical Relief
TOR	Terms of reference
TC	Technical cooperation
UN	United Nations
UNDP	United Nations Development Programme
UNHCR	United Nations High Commission for Refugees
VOB	German contracting rules for award of public works contracts
WFP	World Food Programme

Gernot Minke

Construction manual for earthquake-resistant houses built of earth

Published by
GATE - BASIN (Building Advisory Service and Information Network) at
GTZ GmbH (Gesellschaft für Technische Zusammenarbeit)

P.O.Box 5180
D-65726 Eschborn

Tel.: ++49-6196-79-3095
Fax: ++49-6196-79-7352
e-mail: gate-basin@gtz.de
Homepage: http://www.gtz.de/basin

December 2001

Contents

Acknowledgement

This manual was first published in Spanish within the context of the research and development project "Viviendas sismorresistentes en zonas rurales de los Andes", supported by the German organizations Deutsche Forschungsgemeinschaft, Bonn (DFG), and Deutsche Gesellschaft für Technische Zusammenarbeit (GTZ) GmbH, Eschborn (gtz). It also comprises the results of former research projects of the "Forschungslabor für Experimentelles Bauen" (Building Research Laboratory, University of Kassel, Germany), directed by the author and sponsored by gtz, DAAD and the University of Kassel.
The layout and computer drawings were prepared by Friedemann Mahlke, the freehand sketches by Vera Frey.

Kassel, December 2001
Gernot Minke

Introduction

The solutions proposed in this manual concentrate on low-cost single-story houses, built from earth in rural areas of earthquake-prone zones. They are based on research projects carried out at the Forschungslabor für Experimentelles Bauen (Building Research Laboratory) of the University of Kassel, Germany, on the analysis of earthquake damage in Latin America, on studying relevant literature and on the implementation of several test structures in Germany and prototype houses in Guatemala, Ecuador and Chile.

Using locally available building materials as well as the skills of local craftsmen should be considered for the design of seismic-resistant (earthquake-proof) houses and it should be proved that the solutions are accepted by the users.

Earth as a building material has lost its credibility mainly because of the fact that most modern houses with earth walls could not withstand earthquakes, and also since earth is considered as the building material for the poor. In this context it is worth mentioning that a census conducted by the Salvadorian Government after the earthquake in January and February 2001 states that adobe houses were not worse affected than other houses.

In many areas of the Andes regions building with adobe (unburned, unstabilized handmade soil blocks) is forbidden nowadays. Nevertheless, the majority of the rural population still builds with this building material, as it cannot afford to build with bricks or concrete blocks.

When designing low-cost houses for rural areas it should be taken into account that structural failures as a consequence of an earthquake have to be avoided, whereas minor damage like small cracks must be tolerated if it can be easily restored.

For more information about the different building techniques with earth, the physical and structural characteristics of earth and the possibilities of improving them, reference is made to the "Earth Construction Handbook" by the author, published at WIT Press, Southampton, UK 2000, or to the "Manual de Construcción en Tierra", publicadora Nordan, Montevideo, Uruguay 2001.

1. General aspects of earthquakes

1.1 Location, magnitude, intensity

An earthquake is produced either by movement of tectonic plates or by volcanic activity. The areas of the world that are most earthquake-prone are shown in Fig. 1-1. Earthquakes of intensity 8 on the Richter scale have been recorded in Asia and of up to 8.7 in the Andes . Nearly a hundred earthquakes of intensity higher than 6 and twenty of intensity higher than 7 on the Richter scale are recorded annually. Several thousand people are affected by earthquakes every year.

The magnitude (M) of an earthquake usually is measured on the Richter scale, which is logarithmic with an open end. It is a measure of the energy produced in the epicenter, the place where the earthquake is generated. The Mescali scale, on the other hand, is divided into 12 grades and indicates the intensity of the local impact.

The local impacts on a structure depend not only by the magnitude of the earthquake, but also on the depth of and distance from the epicenter, the geology and topography, the kind of local soil and last but not least on the duration, frequency and acceleration of the impacts.

1.2 Structural aspects

Structures are mainly affected by the horizontal forces created by the earthquake. The vertical forces are usually less than 50% of the horizontal ones.
The main danger due to horizontal movements of the earth is that the walls of buildings might fall outwards and consequently the roofs collapse. The main aim of building earthquake-resistant houses, therefore, is to avoid walls being able to fall outwards and to ensure that the roofs are fixed well to the walls, or even better that they stand on a system of posts separated from the wall, so that the roof system and the walls can swing independently due to their differing frequency.

With a "medium" earthquake the following measures have to be taken into account:
horizontal deformation: h = 0.1 to 0.3 m
horizontal velocity: v = 0.1 to 0.3 m/s
horizontal acceleration: a = 0.1 to 0.3 m/s^2 = 0.15 to 0.30 g
A horizontal acceleration of 0.3 g means that 30% of the dead load of the structural elements acts as horizontal force against the structure ("equivalent force"). Usually simple structures are calculated by the method of "equivalent

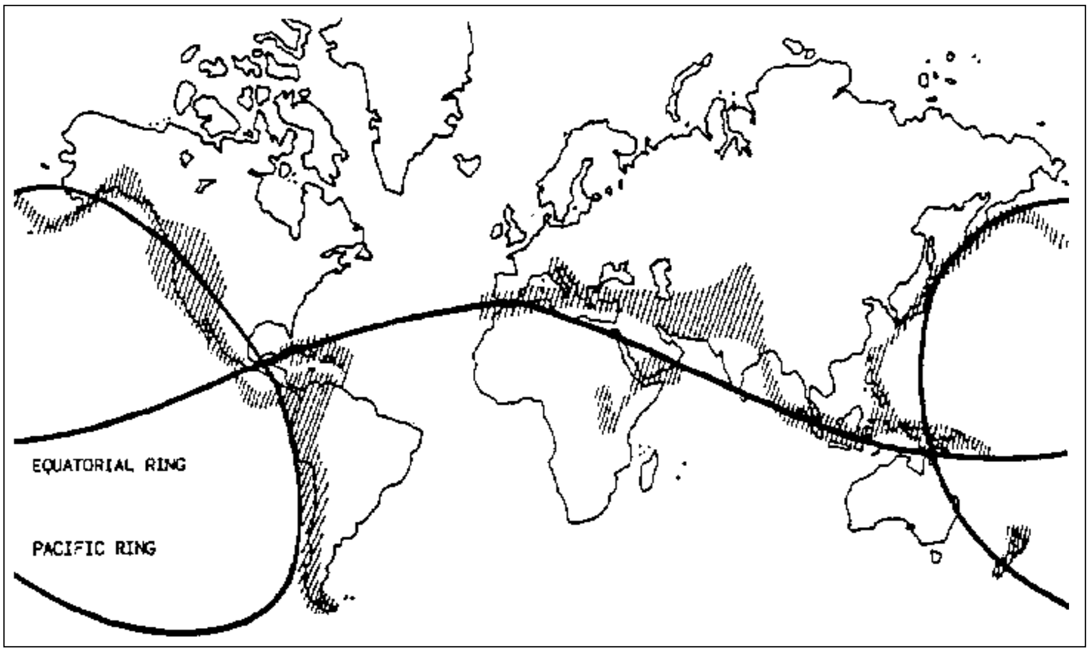

1-1
Earthquake zones (Houben, Guillaud 1984)

force", in which the horizontal impact is taken as a static force and not as a dynamic one.
However, the higher the ductility, the capacity for deformation without structural failure, the lower the equivalent force is and the lower the structural resistance must be.

The quality of an earthquake-resistant structure can be expressed in the formula

structural quality = resistance x ductility

This means the lower the resistance of the structure is, the higher the flexibility must be, and the higher the flexibility is, the lower the resistance must be (Grohmann, 1998).

The historical rammed earth houses with walls of 60 to 100 cm thick had enough resistance to withstand earthquakes and did not need to be flexible. For instance in Mendoza, Argentina, these houses withstood all earthquakes of the last centuries, whereas all modern buildings built of adobe or bricks collapsed. However, these structures are not economic nowadays. Economic solutions have less rigidity, therefore they must allow deformation during seismic shocks without collapse.

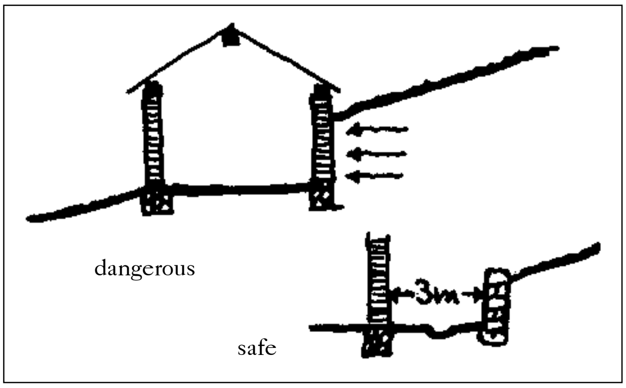

2-1

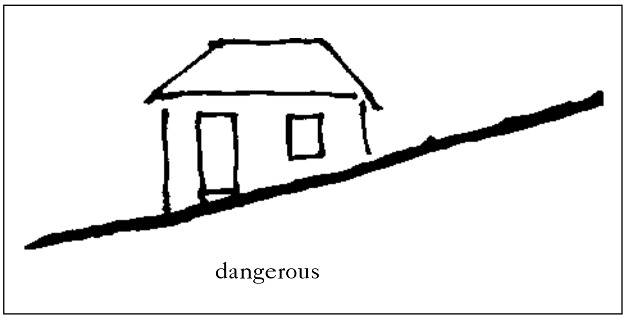

2-2

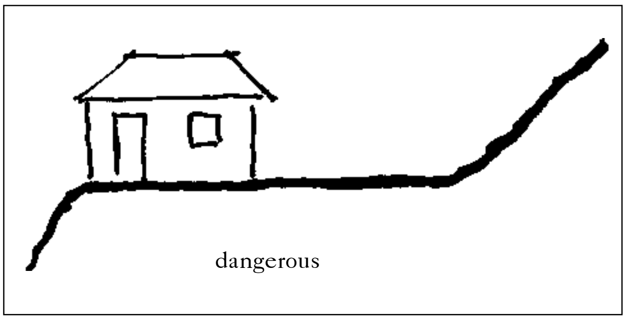

2-3

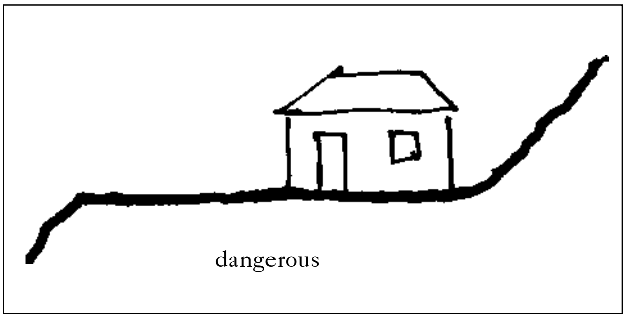

2-4

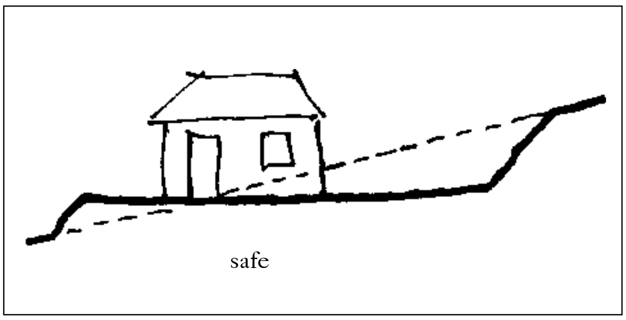

2-5

2-1 to 2-5 Location of a house on the slope

2. Placement of house in the case of slopes

In earthquake-prone areas, where the site is inclined, the following rules must be taken into account:

a) The house should not be cut into the slope, as the adjacent wall might collapse due to the horizontal forces of the earth, see Fig. 2-1
b) The house should not stand on the slope as it might slip down
c) The house should not stand near steep slopes as it might collapse due to falling rocks or earth avalanches, see Figs. 2-3 and 2-4
d) If a slope is given, a platform has to be formed and the house has to be placed at sufficient distance from the slopes, see Fig. 2-5
e) It is recommended that massive and heavy houses stand on soft sandy soils, whereas light flexible structures can stand on rocky soils.
f) Different floor levels should be avoided.

If it is necessary, the rooms should be separated.

3. Shape of plan

The shape of the plan of the house might have an important influence on its stability. The following rules must be considered:

a) The more compact a plan, the better the stability. This means a square plan is better than a rectangular one, and a circle is better than a square.
b) L-shaped plans are less stable. The best solution in this case is to separate the elements as shown in Fig. 3-2.

At the University of Kassel a simple test method was developed within a doctorate thesis in order to show the influence of the wall shape on resistance to seismic shocks. A weight of 40 kg at the end of a 5.5 m long pendulum was dropped against the models, see Fig. 3-3. The rammed earth house with square plan showed the first large cracks after the second stroke, see Fig. 3-4. After three strokes one part of the wall separated, see Fig. 3-5, and after four strokes the house collapsed, see Fig. 3-6. The rammed earth house with circular plan, however, showed the first cracks only after three strokes, see Fig. 3-7, and only after six strokes did one small part of the wall separate, see Fig. 3-8 (Yazdani, 1985). Syed Sibtain built several houses in Afghanistan utilizing convex walls with buttresses, which give good stability similar to that of circular walls, see Fig. 3-9 (Sibtain, 1982). But the problem with all wall structures is that the openings weaken their stability. Therefore, openings must be carefully designed and often require additional reinforcement.

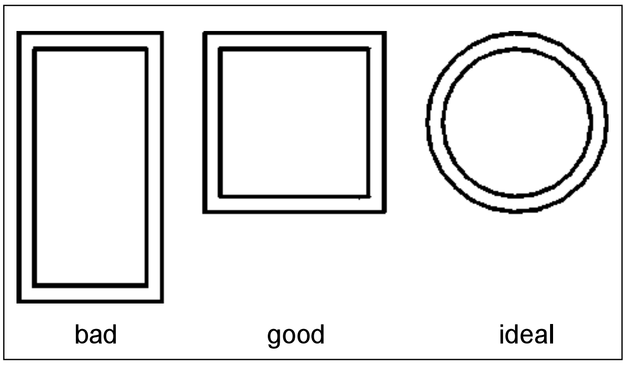

3-1 Ground plans

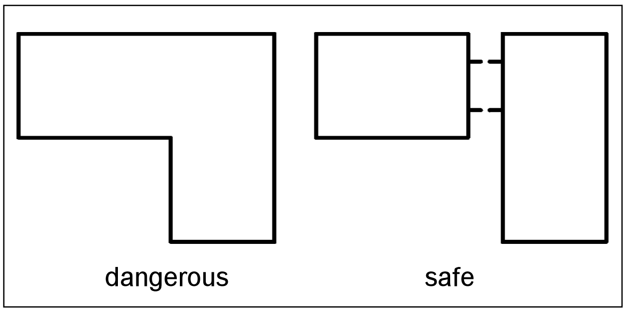

3-2

3-3 Simulation of seismic shocks (Minke 2000)

3-4

3-5

3-6

3-7

3-8

3-4 to 3-8 Earthquake tests with models of square and circular shape (Minke 2001)

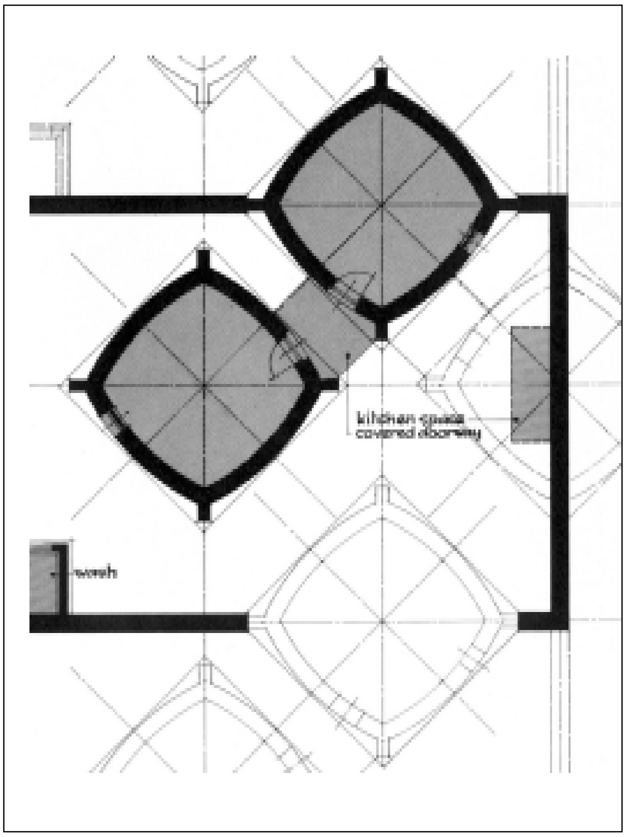

3-9 Plan of seismic-resistant houses, Afghanistan (Sibtain 1982)

4. Typical failures, typical design mistakes

Typical failures which occurred with simulated seismic movements on models in the scale of 1:5 are to be seen in Figs. 4-1 to 4-3. The most significant are:

- diagonal cracks lead from the edges of windows to the bottom of the wall,
- the lintel often destabilizes the walls, especially if it is not long enough and does not have sufficient bond with the wall,
- if the wall between window and door or between opening and corner is not long enough, it might break,
- if the wall has no ring beam at the top it breaks easily when suffering perpendicular loads which produce bending.

The houses shown in Fig. 4-4 seem to be well designed with the stabilizing buttresses at the corner. But without a ring beam they do not have sufficient stability against seismic shocks, as Fig. 4-5 and 4-6 show.

The 10 main structural mistakes which might lead to a collapse within an earthquake are explained in Fig. 4-7.

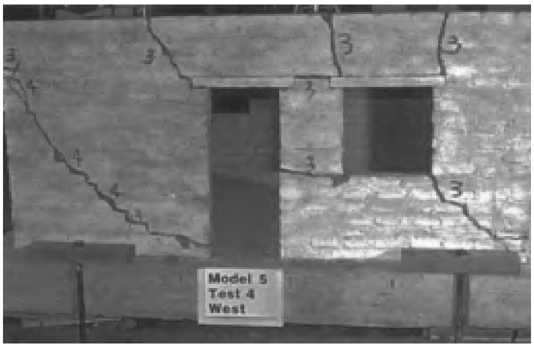

4-1

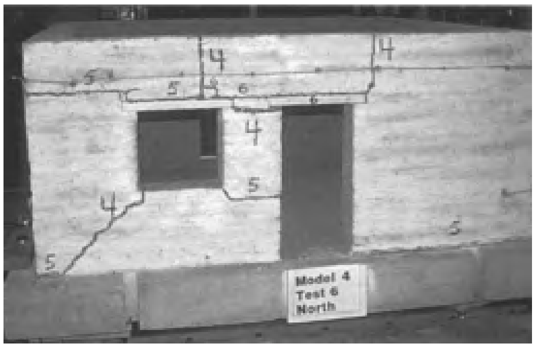

4-2

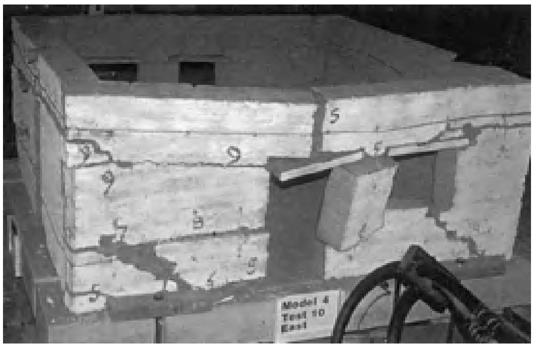

4-3

4-1 to 4-3 Typical failures caused by seismic movements (Tolles et al. 2000)

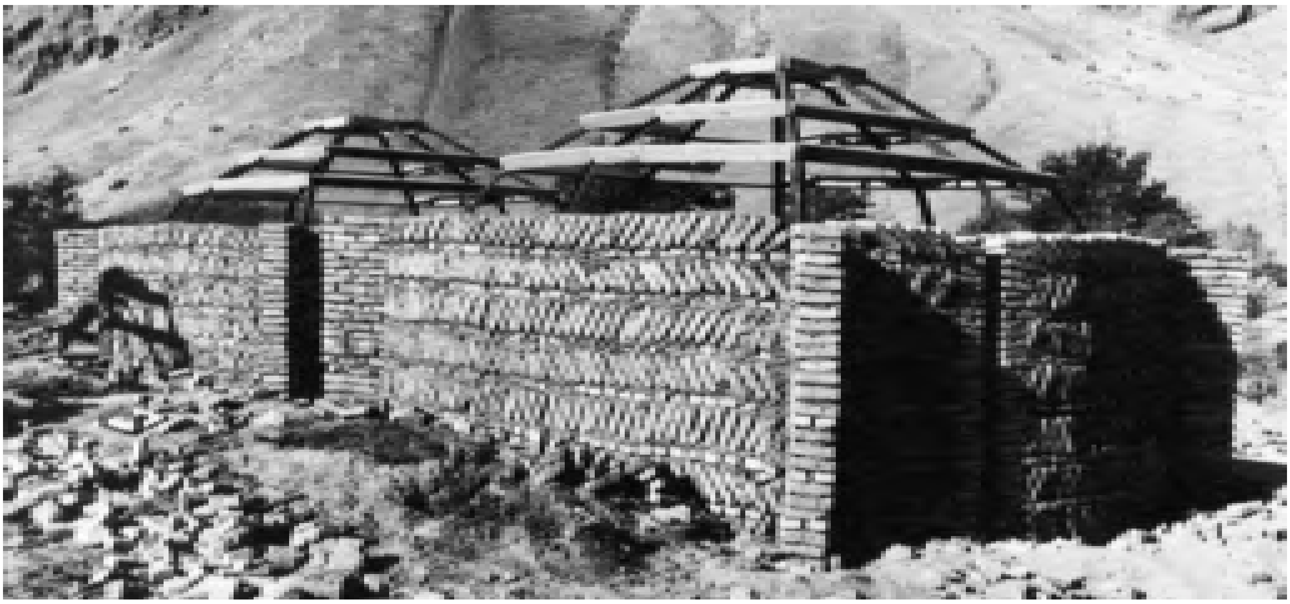
4-4 Earthquake-proof houses, Afghanistan (Sibtain 1982)

4-5 and 4-6 Models of the house in Fig. 4-4 after seismic movements (Sibtain, 1982)

5. Structural design aspects

There are three general principles for designing an earthquake-resistant structure:

1. Walls and roof are well interconnected and so rigid that no deformation occurs in the earthquake.
2. Walls are flexible enough, so that the kinetic energy of the earthquake is absorbed by deformation. In this case a ring beam, which is able to take bending forces, is necessary and the joints between wall and ring beam and ring beam and roof must be strong enough.
3. The walls are designed as mentioned in case 2, but the roof is fixed to columns separated from the wall, so that both structural systems can move independently as they have different frequencies.

Case 1 can be a house with very thick rammed earth wall or a reinforced concrete frame structure with moment-stiff corners at the top and at the bottom, and infills of bricks, cement blocks or adobes.

A variation of a nonflexible structure is a timber frame structure which has less moment-stiff corners and is therefore stabilized by crossing diagonals of steel. In this case the danger exists that the connection of the diagonal or the elements itself may not be strong enough to withstand the concentration of stresses at the corner and breaks, causing the collapse of the wall, see Fig. 5-1.

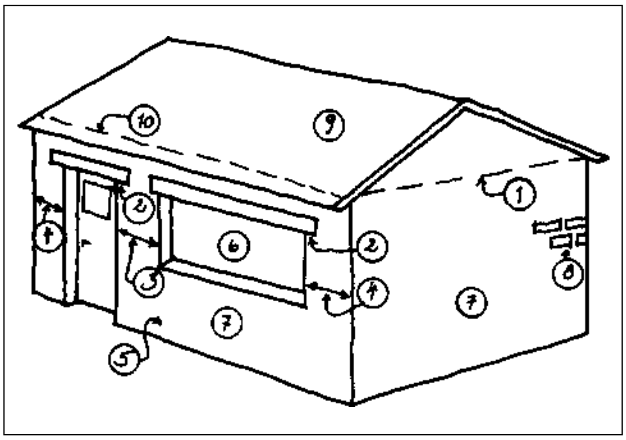

4-7 Typical design mistakes which might lead to the collapse of the house

1. Ring beam is lacking.
2. Lintels do not reach deeply enough into masonry.
3. The distance between door and window is too small.
4. The distance between openings and wall corner is too small.
5. Plinth is lacking.
6. The window is too wide in proportion to its height.
7. The wall is too thin in relation to its height.
8. The quality of the mortar is too poor, the vertical joints are not totally filled, the horizontal joints are too thick (more than 15 mm).
9. The roof is too heavy.
10. The roof is not sufficiently fixed to the wall.

The systems of case 2 and 3 can be built without concrete and steel and in most regions are much more economic. Walls built with the system of "wattle and daub" (in Spanish: "bahareque" or "quincha") show extreme flexibility. Fig. 5-2 shows a house which suffered under a heavy earthquake in Guatemala, but did not collapse.

As the vertical forces created by the earthquake are less important, we have to decide how the walls withstand the horizontal forces. There are two types of impacts to be considered: those forces, which act parallel to the wall and those which act perpendicular to it. (Forces acting at an inclined angle to the wall can be divided into two components, one parallel and one perpendicular to the wall.)
The perpendicular forces create a moment which might provoke a collapse of the wall if it is not stabilized by intermediate walls, buttresses and ring beams. If the walls are very thin and high, they might collapse even though stabilized, due to the bending forces that create buckling. The parallel forces are less dangerous. They produce thrust within walls which in the case of adobe walls with poor mortar create the typical diagonal cracks, shown in Fig. 4-1 and 4-2.
The most dangerous effects result when the walls fall outwards and the roofs collapse. Therefore the safest solution is to place the roof on a separate structure independent of the walls, see chapter 12.
When designing earthquake-resistant houses, we must consider that the horizontal force ("equivalent force") to be calculated is proportional to the mass of the structure and the higher the walls, the higher their displacement.

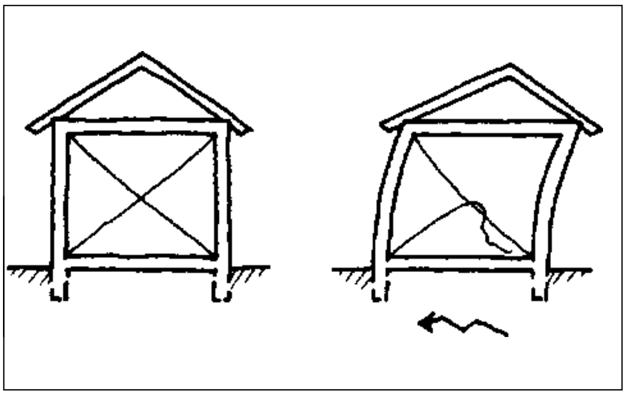

5-1

5-2 Wattle and daub structure, after a heavy earthquake in Guatemala (Minke 2000)

6. Rammed earth walls

6.1 General

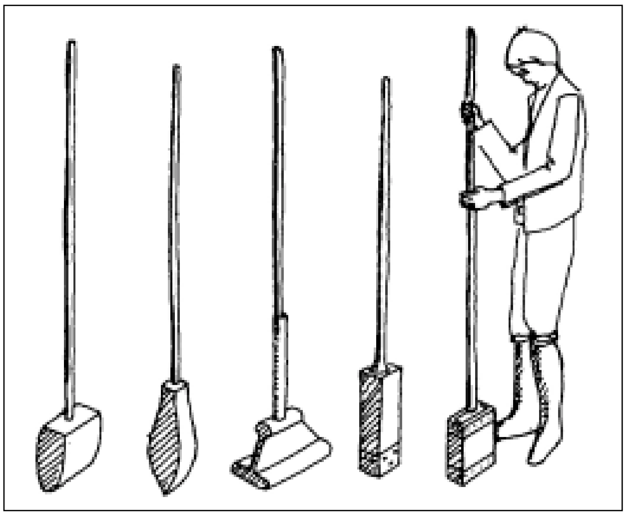

6-1 Manual tempers
(Minke 2001)

6-2 Temper with two «heads», used in Ecuador
(Minke 2001)

In the rammed earth technique moist earth is poured into a formwork in layers 10 to 15 cm thick and compacted by ramming. The formwork consists of two parallel panels, separated and interconnected by spacers, see Fig. 6-1. By comparison with adobe masonry, rammed earth walls provide more stability as they are monolithic.

Traditional techniques use formwork with big wooden spacers, which cause openings and weak parts and often show horizontal shrinkage cracks between the layers, as the fresh layer on top of the old one shows larger shrinkage.

To avoid both disadvantages a special formwork was developed at the Building Research Laboratory (FEB), University of Kassel, which is spaced only at the bottom by a very thin steel bar and on the top above the wall, see Fig. 6-4.

Traditional techniques use manual tampers with conical or flat heads, see Fig. 6-1. Conical tampers give a better bond between the different earth layers, but need more time. It is preferable to use a tamper with two heads, one with a round surface and the other with a square surface, see Fig. 6-2. The square tamper has to be used at the borders of the formwork. Pneumatic tampers and stronger formwork, as used nowadays for instance in Australia, can reduce the labor input by the factor of 10. (For further details see: G. Minke: Earth Construction Handbook, WIT Southampton, UK 2000)

6.2 Stabilization through mass

Rammed earth walls 60 to 100 cm thick, which are not too high, can withstand horizontal seismic shocks without additional old age withstood all earthquakes, whereas newly constructed houses next to them collapsed, even when they were built with bricks and a concrete ring beam. As thick rammed earth walls are too labor-intensive and no longer affordable nowadays, new structural solutions have to be used, as set out in the following chapters

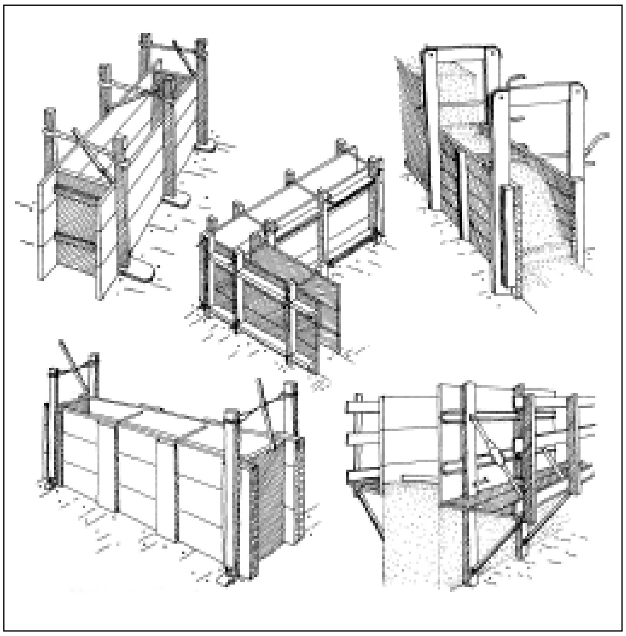

6-3 Formwork for rammed earth (Minke 2000)

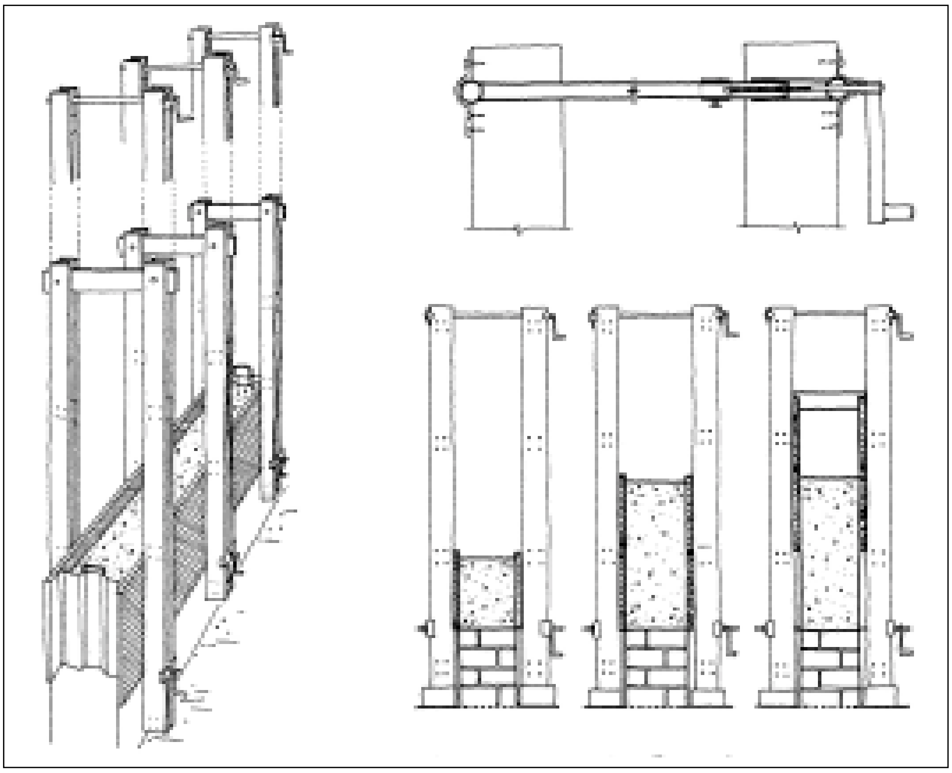

6-4 Climbing formwork (Minke 2000)

6.3 Stabilization through shape of elements

A simple solution for stabilizing rammed earth walls of lesser thickness is to use elements in the shape of L, T, U, X, Y or Z (Fig. 6-5). Due to their angles they show better stability against lateral forces. If the wall is 30 cm thick, the free ends of the elements should not be longer than 3/4 and not shorter than 1/3 of their height, see Fig. 6-6. This minimal length is necessary to transfer the loads diagonally to the plinth or foundation. If the free ends are longer than 3/4 of its height, they should be stabilized by another angle. If the angle is well fixed on the bottom to the plinth and on the top to a ring beam, it can be larger or higher. Nevertheless, the height should not be more than 8 times the width, see Fig. 6-7.

The forces perpendicular to the wall are transferred into the angle which is parallel to the direction of the force. This means it is transferred versus a moment which creates stress concentration at the inner corner of the angle.

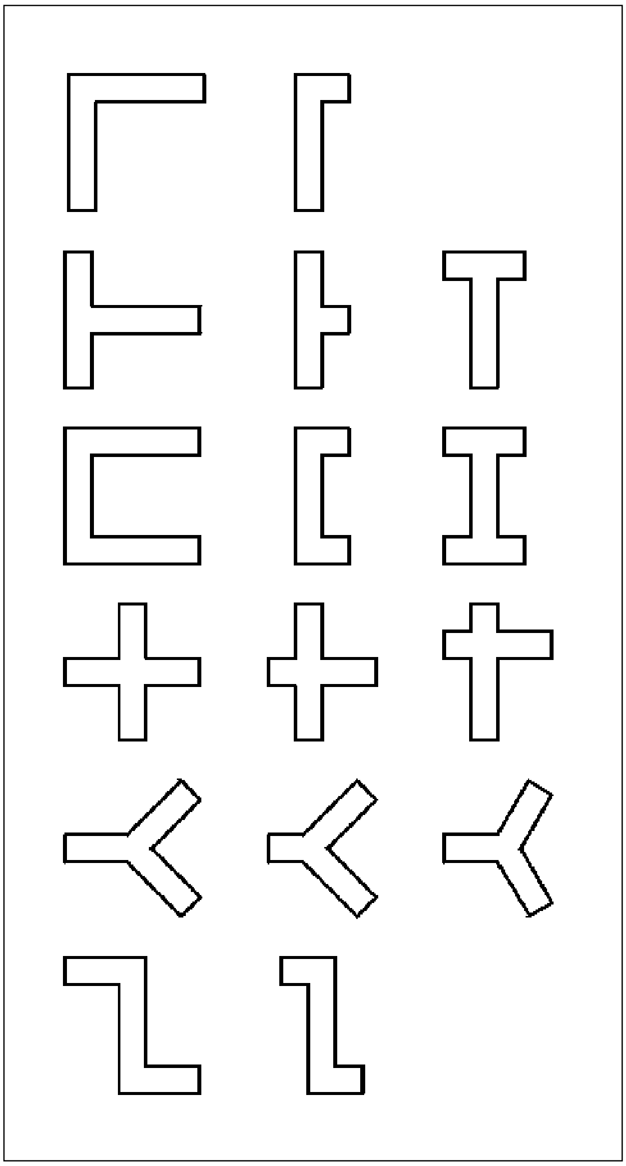

6-5 Wall elements stabilized by their shape

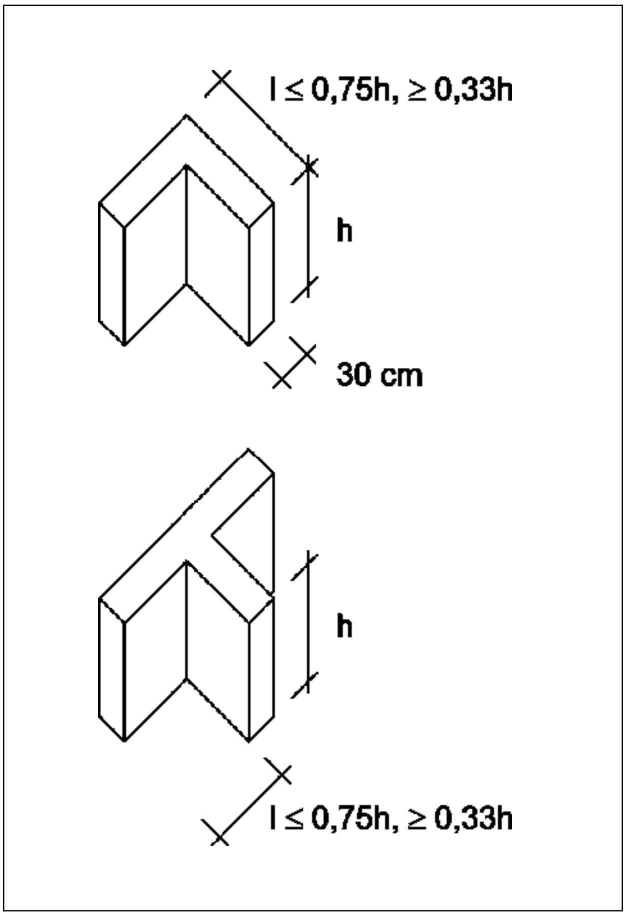

6-6 Recommended proportions

Therefore it is advisable to enlarge the section at this corner, shown in Figs. 6-8 and 6-9. Fig. 6-12 shows different proposals for plans utilizing angular elements.

To improve lateral stability the joint of two elements should be formed with tongue and groove, see Fig. 6-10. However, in order to obtain a more flexible structure, elements with shorter length and no tongue and groove joint should be used (Fig. 6-11), if the elements are well linked to a ring beam above and to a plinth below. This kind of solution is used in the project described in chapter 6.4.

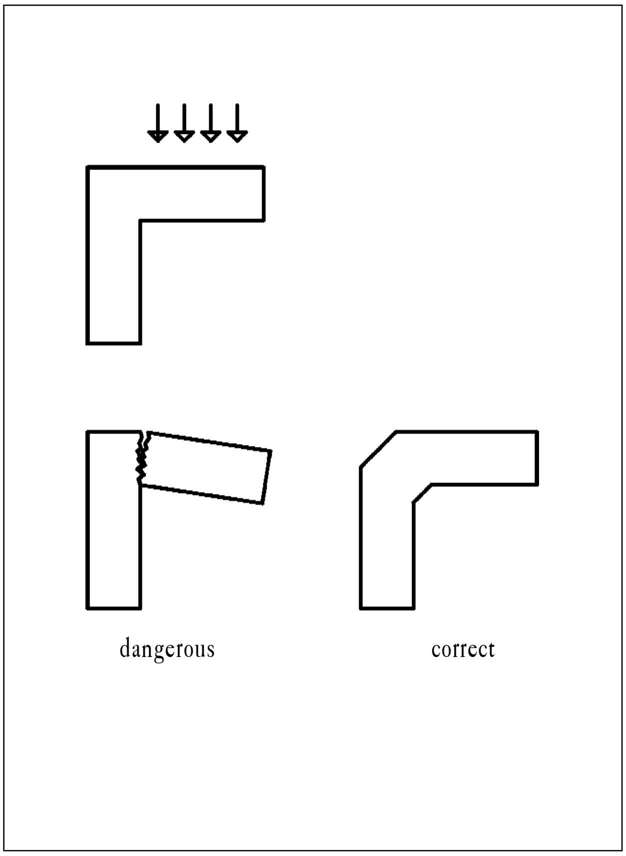

6-8 Corner solution

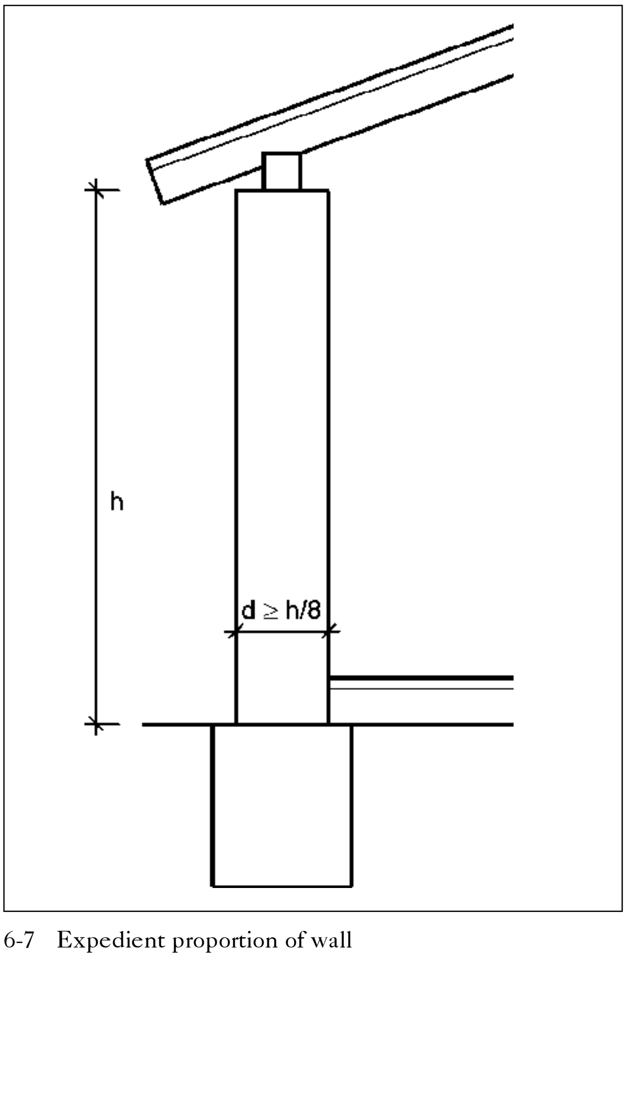

6-7 Expedient proportion of wall

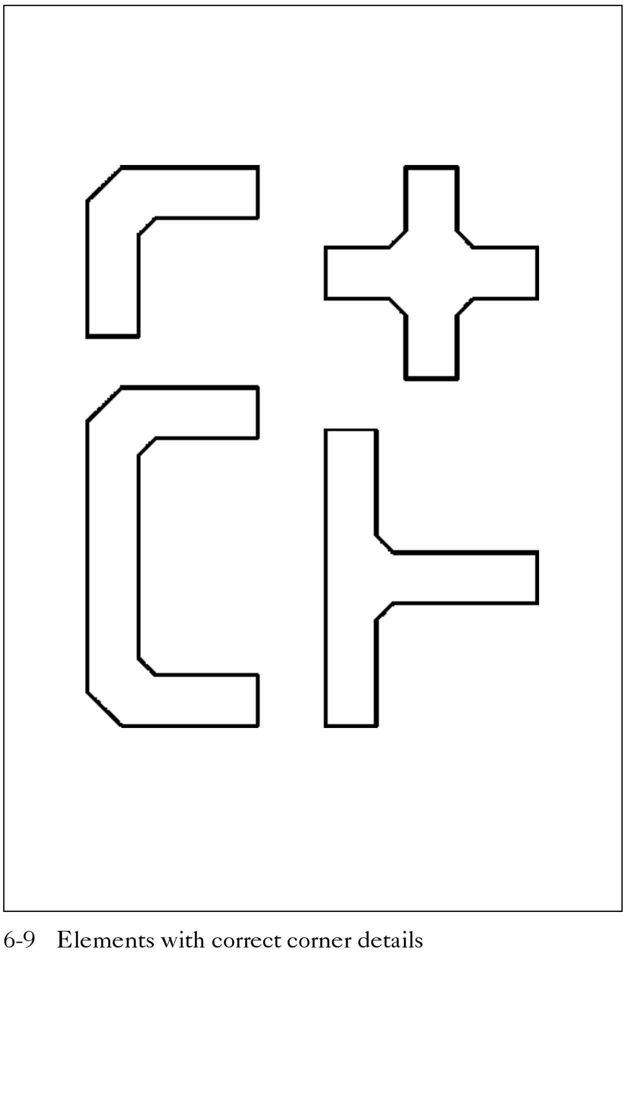

6-9 Elements with correct corner details

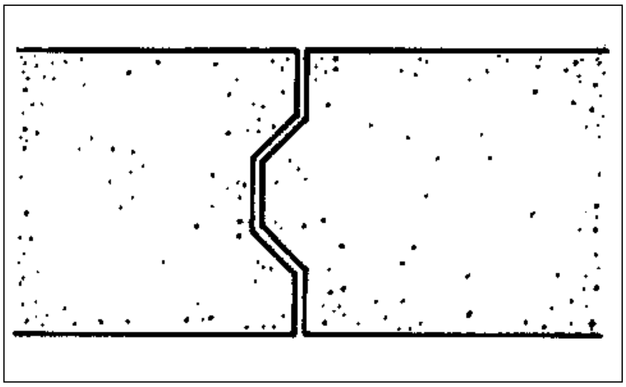

6-10 Joint with lateral stability

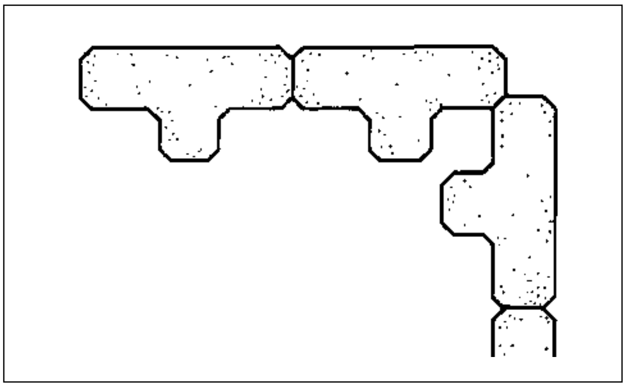

6-11

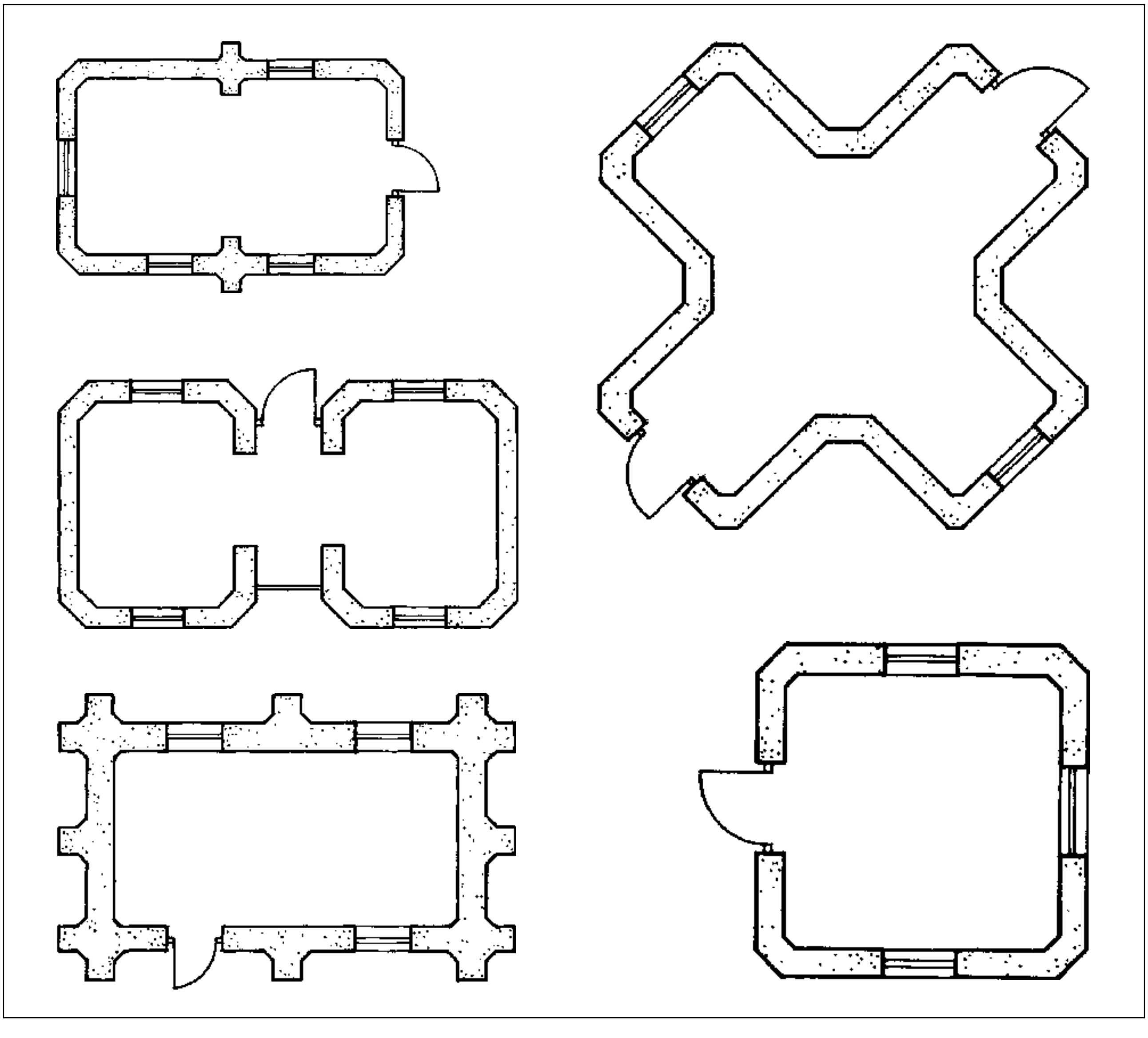

6-12 Proposals for simple plans utilizing angular elements

6.4 Internal reinforcement

One method of stabilizing rammed earth walls against horizontal forces is to use vertical rods of bamboo or wood inside the wall. These elements should be fixed to the foundation below and to a ring beam above, see Fig. 6-13. Horizontal reinforcement elements usually weaken the structure and lead to horizontal cracks, as shear forces cannot be transferred by the rods, since the bond between these elements and the earth is very poor. Furthermore in practice it is difficult to ram the earth well underneath these elements, due to their elastic behavior when hit.
A new system utilizing bamboo as vertical reinforcement for element-type rammed earth walls was developed in 1978 at the FEB and successfully implemented together with the University Francisco Marroquin (UFM) and Centre of Appropriate Technology (CEMAT), both from Guatemala. The low-cost housing prototype built is depicted in Figs. 6-14 to 6-19. The wall elements were rammed in a metal T-shape form, 40 cm high, 80 cm large and 14 respectively 30 cm wide, see Figs. 6-16 and 6-19. The rib plays an important role in the stabilization of the element against horizontal forces, as it acts like a buttress. The elements are reinforced by 4 vertical bamboo rods of 2 to 3 cm diameter. The bamboo rods were fixed at the bottom to the horizontal bamboo ring beam and the stretched vertical rods of the plinth, see Fig. 6-14.

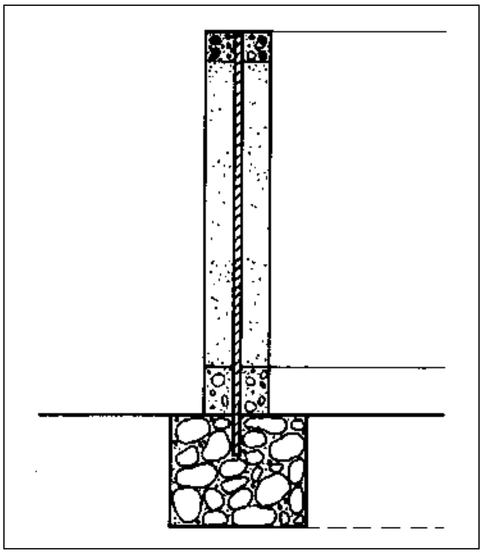

6-13

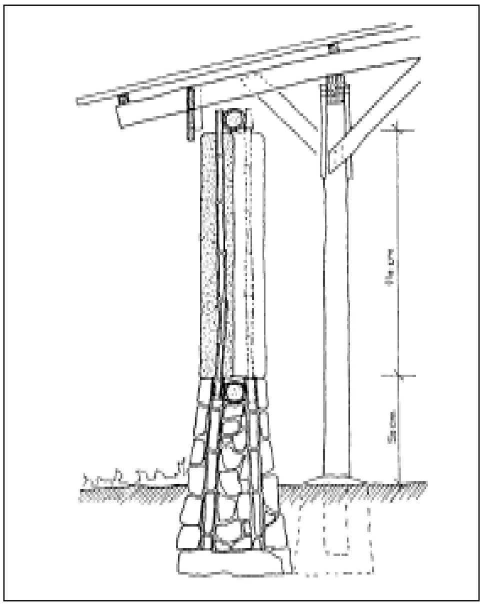

6-14

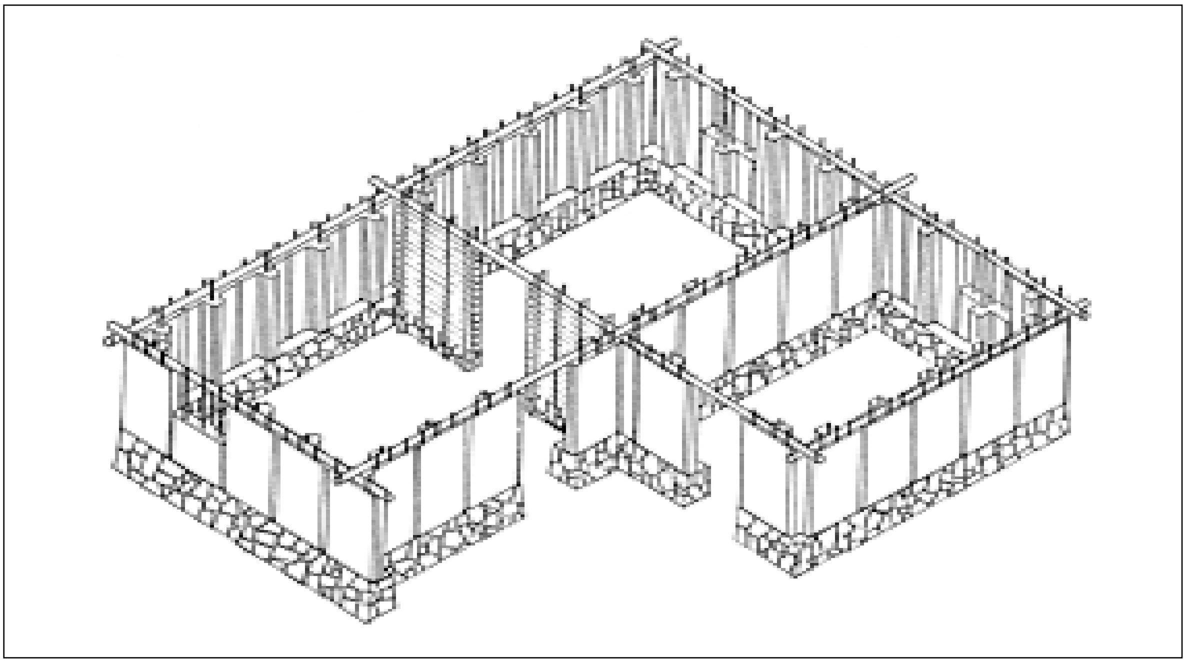

6-15

6-16

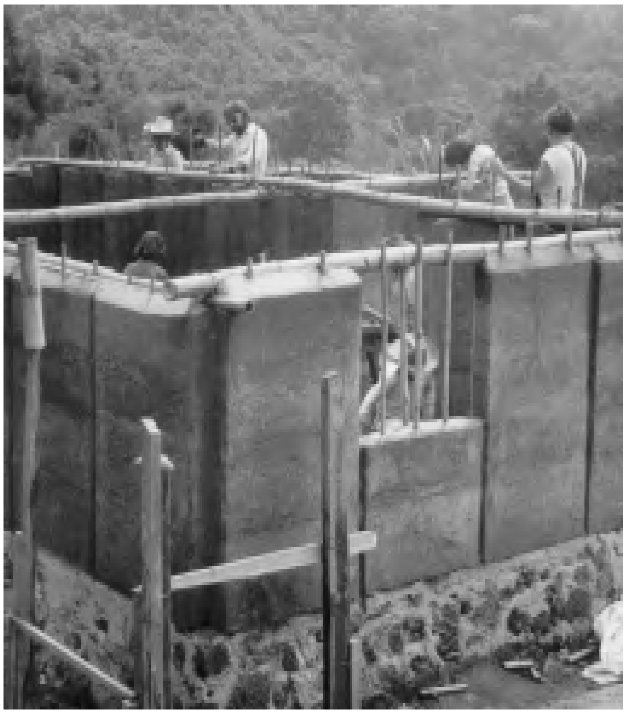

6-17

After drying vertical gaps of 1 to 2 cm appeared between the elements, which were then closed by earth. These vertical joints are predesigned rupture joints which can crack in an earthquake and allow independent movements of each element. So the kinetic energy of the seismic shock will be absorbed by deformation, but the element being fixed at the top and bottom will not fall. After the earthquake the open joints can easily be closed again with earth. Using this idea an earth wall system was developed, which is massive and flexible at the same time. The second new fact with this prototype structure was that the roof rests on posts standing 50 cm inside

6-18

the walls, so that the roof and the walls can swing independently of each other within the earthquake.
In 1998 the FEB developed another reinforced rammed earth wall system which was utilized for a low-cost housing project built in cooperation with the University Santiago de Chile in 2001 in Alhué, Chile, see Figs. 6-20 and 6-21. Here too the idea was to separate the roof from the wall system and to use U-shape and L-shape elements, which stabilize themselves by their shape.
The corners of the angular elements were cut under 45 degrees in order to increase their strength as described in chapter 6.3. To obtain additional stabilization they were reinforced by vertical rods of colligue (similar to bamboo), 3 to 5 cm in diameter. Furthermore, the wall elements were always separated by light, flexible elements, or doors and windows. The lower parts of the windows and the parts above the doors were not built with massive elements, but instead of light timber elements. The gables were built in lightweight straw-loam stabilized by wooden elements, similar to the wattle and daub system.

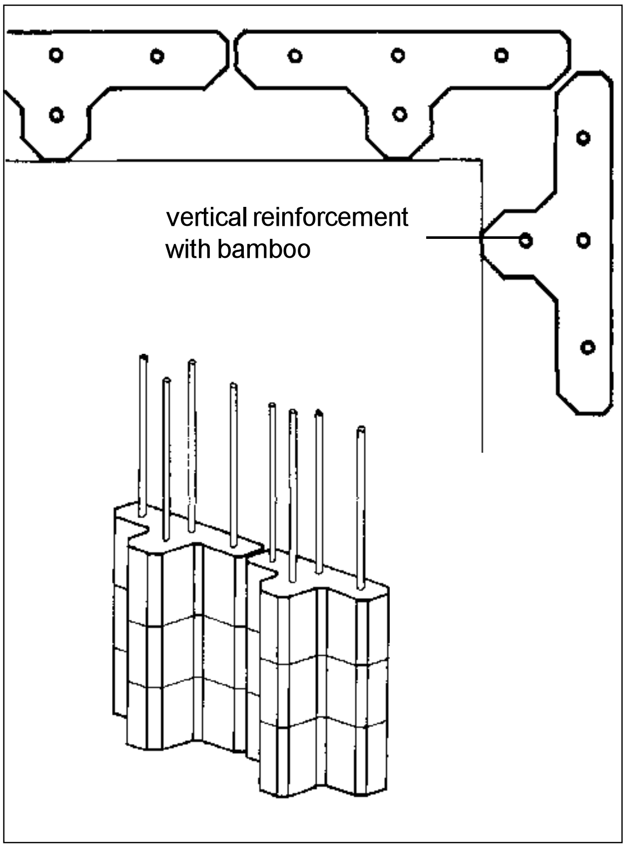

6-19

6-14 to 6-19 Earthquake resistant low-cost housing project, Guatemala (Minke 2001)

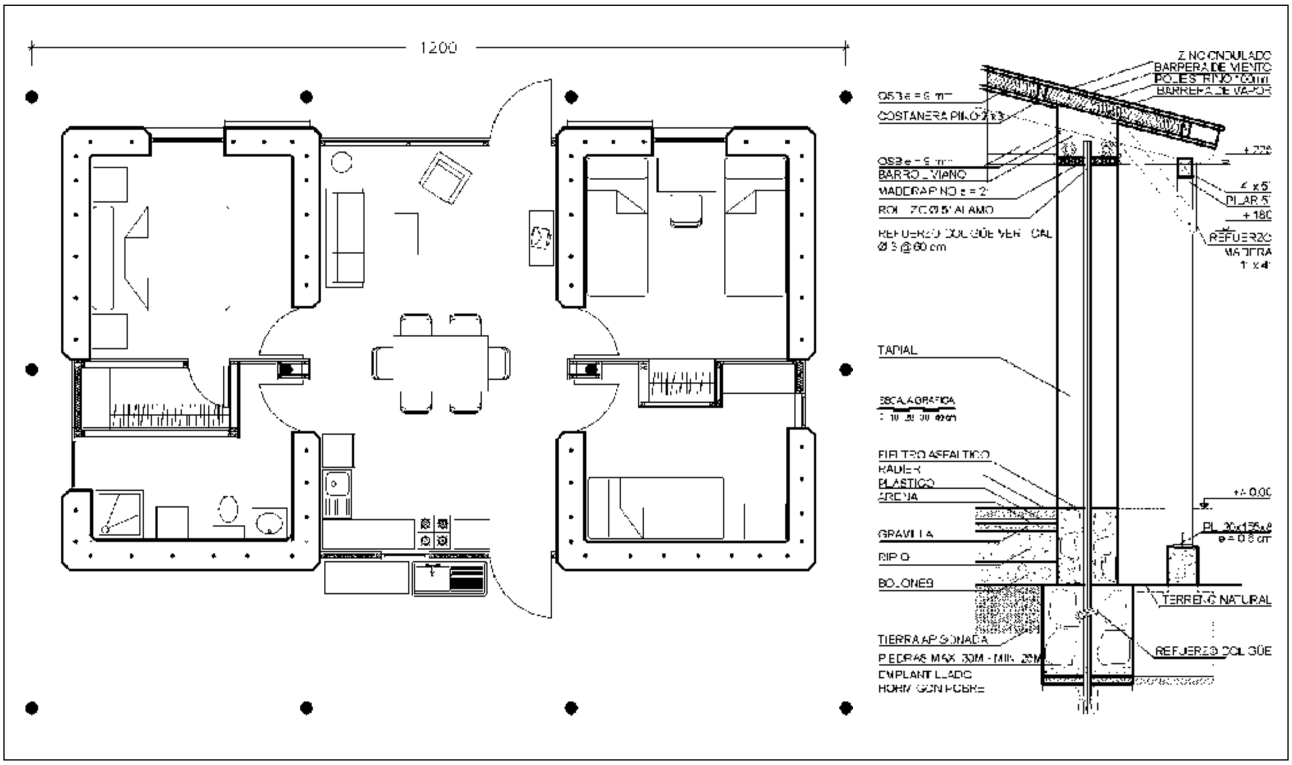

6-20 and 6-21 Earthquake resistant prototype building, Alhué, Chile 2001

7. Adobe walls

7.1 General

Blocks of earth produced manually by throwing wet earth into a formwork are called adobes, or mud bricks or sometimes sun-dried earth blocks. When moist earth is compacted in a manual or powered press, the compressed elements so formed are called soil blocks. Blocks produced by an extrusion process in a brick plant, are called green bricks in their unburnt state. Larger blocks compacted in a formwork by ramming are called rammed earth blocks.
There are many different shapes known all over the world. Fig. 7-1 shows some samples.

Different manually operated presses are known too. Fig. 7.3 shows one of the first, the widespread CINVA-Ram, and Fig. 7-4 the CETA-Ram, which can produce 3 smaller blocks at the same time. Blocks produced by these presses have the

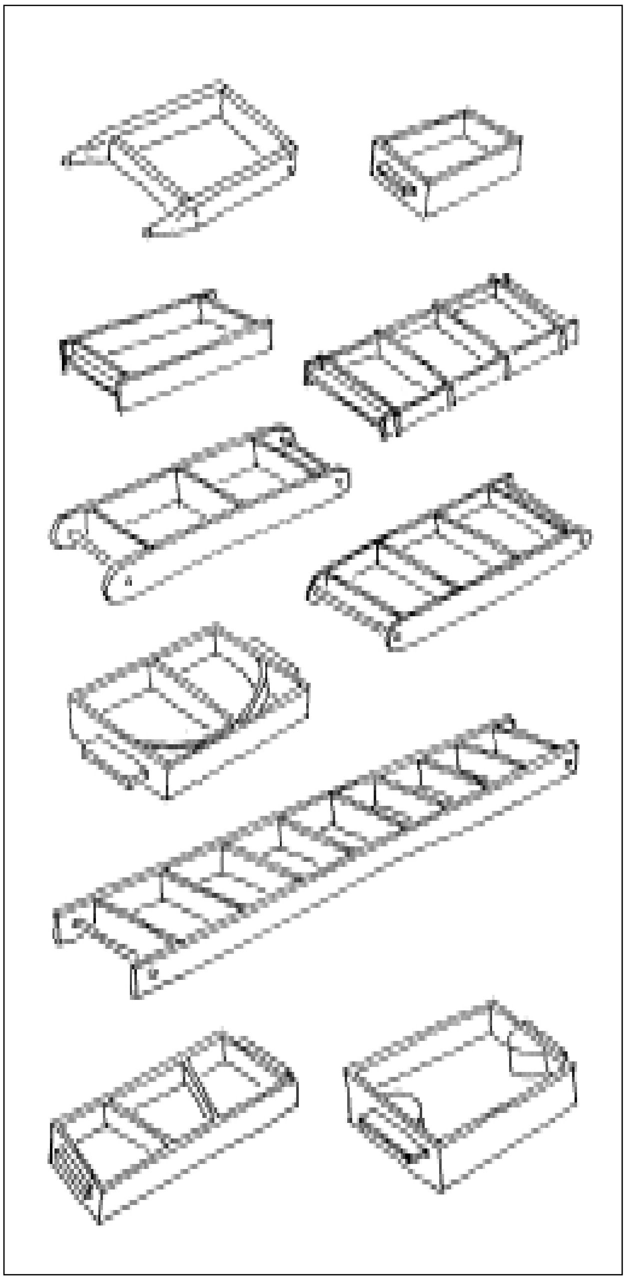

7-1 Adobe forms (Minke 2000)

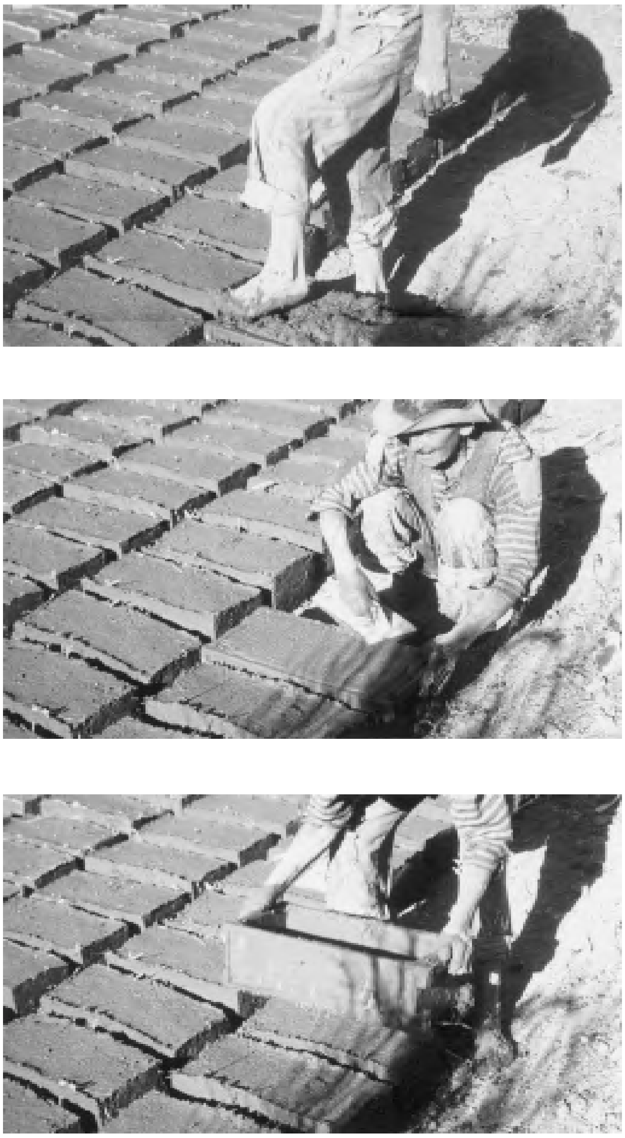

7-2 Production of adobes in Ecuador

advantage of a more exact shape with sharp corners than handmade adobes. Their disadvantages are that they usually need the addition of 4-8% cement to the soil in order to obtain sufficient stability and that the production output is only half by comparison with adobes.

7-4 CETA-Ram, Paraguay

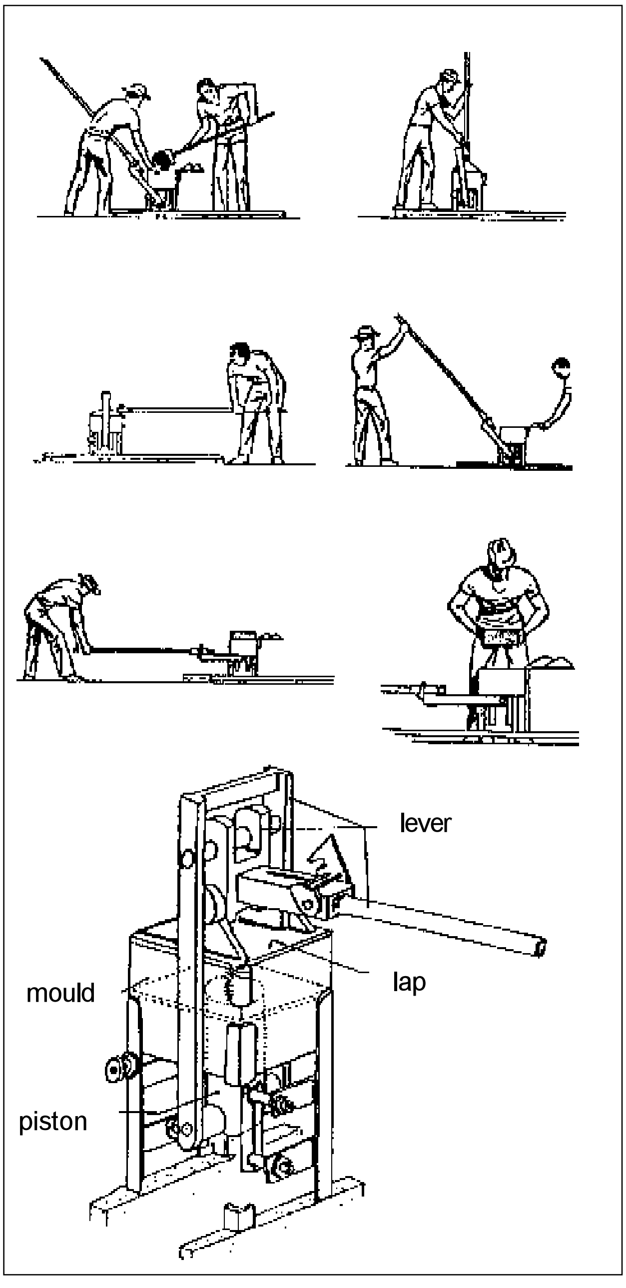

7-3 CINVA-Ram, Colombia

7.2 Internal reinforcement

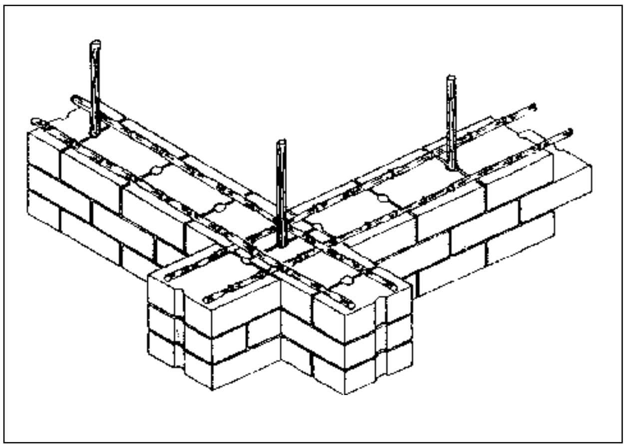

7-5 System ININVI, Perú

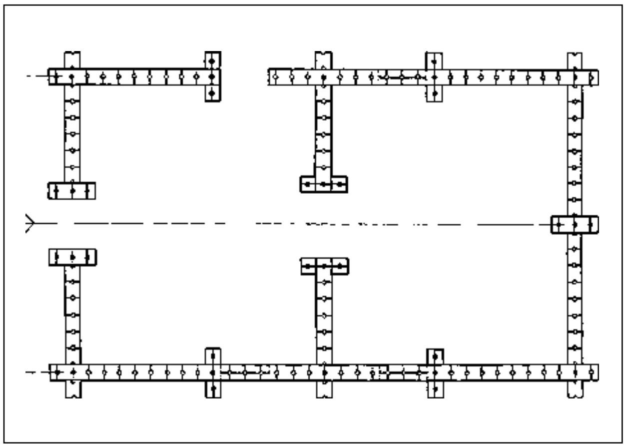

7-6 Ground plan with system ININVI, Perú (Pereira 1995)

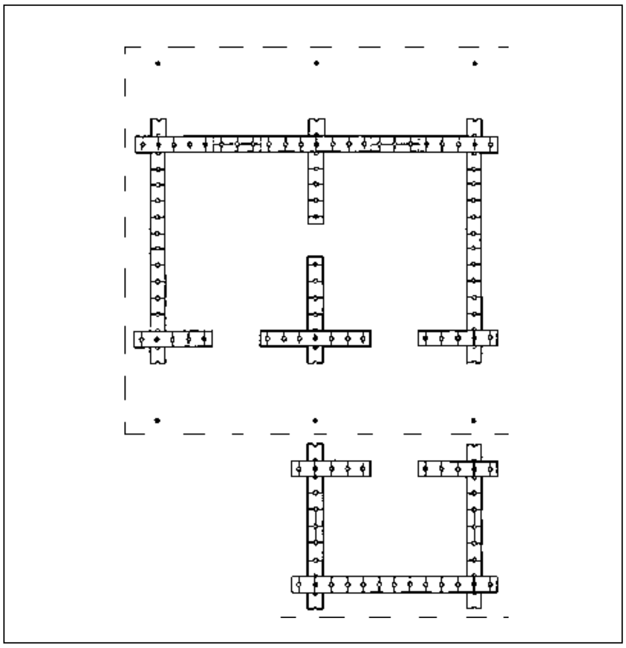

7-7 Improved ground plan with system ININVI, (Equipo Maiz, El Salvador 1995)

The "Instituto nacional de investigación y normalización de la vivienda (ININVI), Peru, developed a system of adobe walls which are stabilized by vertical bamboo rods that fit into holes of 5 cm diameter, formed by grooves at the side of square adobes and halved ones, see Fig. 7-5. Corner buttresses and intermediate buttresses stabilize the wall, see Fig. 7-6. In Fig. 7-8 it can be seen that the horizontal elements of the roof trusses rest on and are fixed to the buttresses. It is important to mention that if the length of a wall is 12 times larger than its thickness, it should have an intermediate buttress, see Fig. 7-6 and 7-9. Interior walls must also have a buttress when they meet the exterior walls. Fig. 7-7 shows a simple design with shorter walls and a separate kitchen built in Salvador (Equipo Maiz, 2001).

Horizontal bamboo rods, as shown in Fig. 7-5, normally do not strengthen the structure. They weaken the walls as they disturb the transfer of shear forces. This is due to the fact, that in practice there is not sufficient bonding between the rods and the adobe, as they are not always covered by 2 cm of mortar and as the quality of the mortar is too poor to take the shear forces.

The buttresses at the corners can be substituted by columns of reinforced concrete, see Fig. 7-10. In the case of the solution shown on the left, it is necessary to place horizontal steel bars at least every 50 cm which grip into the joints with their angles. This detail was forgotten in all publications which illustrate this solution. Without this bond, the column will separate from the wall when strong horizontal shock occurs in the earthquake.

7-8 Educational centre
Acomayo, Perú
(Pereira 1995)

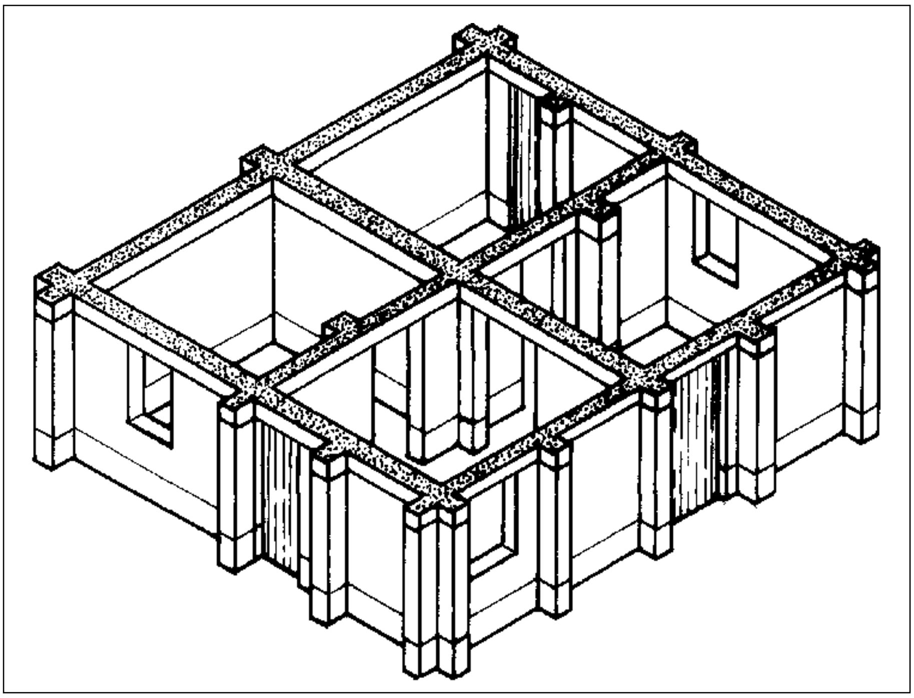

7-9 Adobe walls reinforced by buttresses

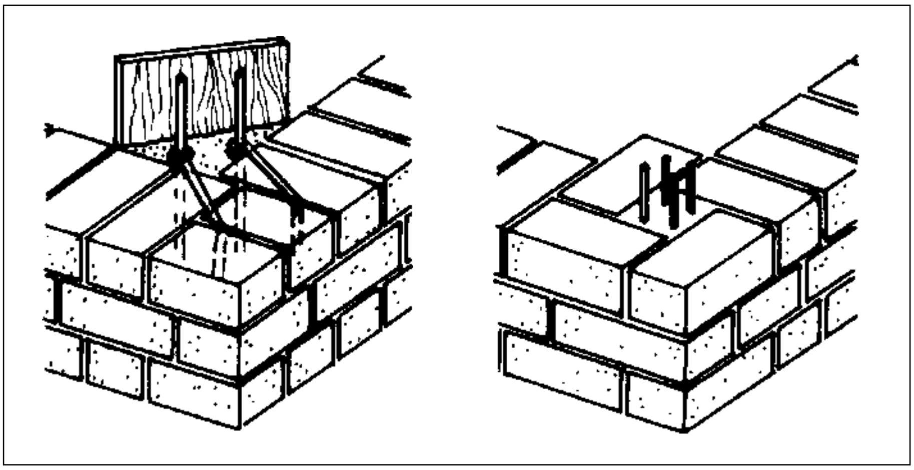

7-10 Stabilized corners

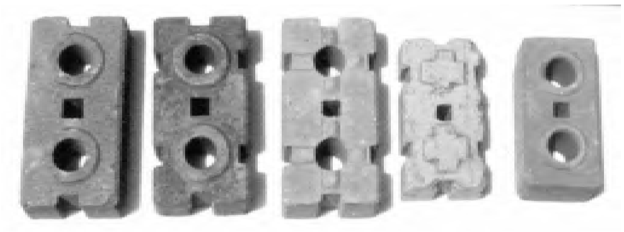

7-11 Interlocking blocks (Weinhuber 1995)

7-12 and 7-13 Prototype house, Thailand 1984 (Weinhuber 1995)

7-15 Improved interlocking system of FEB, Kassel, 2001

7.3 Interlocking blocks

Walls without mortar can be built with interlocking blocks. The blocks have holes for vertical reinforcement elements from steel rods or bamboo canes fixed by pouring cement sludge into the holes. The blocks are pressed in special molds and normally stabilized with cement, see Fig. 7-11. If they have enough vertical reinforcement elements, at least at corners and intersections, and if these are well fixed to the plinth and the ring beam, these walls are supposed to be earthquake-resistant due to their flexibility. The system was developed at the Asian Institute of Technology, Bangkok. Figs. 7-12 and 7-13 shows the first demonstration building, built in 1984 in Thailand. In this case the holes were filled with a mixture of cement and sand in the ratio 1:3.
Fig. 7-14 shows a similar system, developed by the University of the Andes, Mérida, Venezuela. The blocks have grooves and tongues which interlock. Horizontal ring beams of reinforced concrete are placed at a height of 1.20 m and on top of the wall.

If stacked without mortar these walls do not show any high resistance to horizontal forces as the interlocking effect is only given by a height of some millimeters.
Therefore the author developed an improved interlocking system, with blocks showing tongues and grooves 40 mm high, in horizontal as well as in vertical joints, see Fig. 7-15. If these blocks are displaced or lifted up by seismic shocks, they always fall back into their normal position. The holes act as gripholes for easy0 handling, but can also be used to install vertical reinforcement elements. But these additional reinforcement elements are not necessary if the wall corners are formed by concrete columns, which interlock with the block as shown in Fig. 7-15, and these columns are interconnected by a ring beam.

7.4 Concrete skeleton walls with adobe infill

Normal masonry walls are not very stable against seismic shocks. Therefore, nowadays the masonry walls are often framed by concrete which forms a skeleton structure with adobe (or brick) infill, see Fig. 7-2 and 7-3. The vertical concrete columns should have 4 steel bars of at least 14 mm diameter. It is important that the concrete and the adobes interlock, as shown in Fig. 7-16. For low-cost housing projects this solution is normally too expensive. Moreover it shows hardly any flexibility.

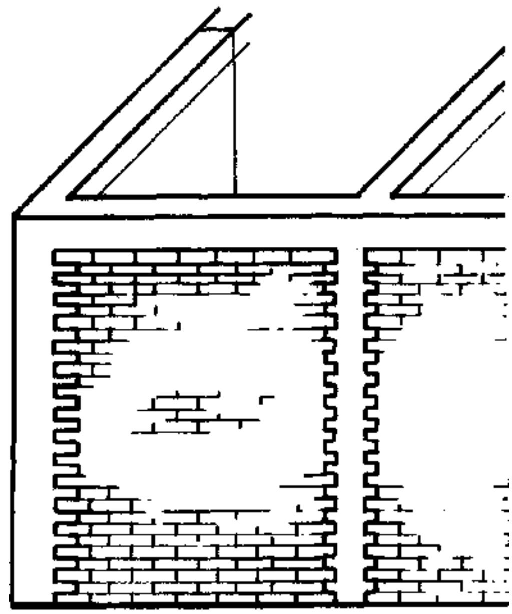

7-16

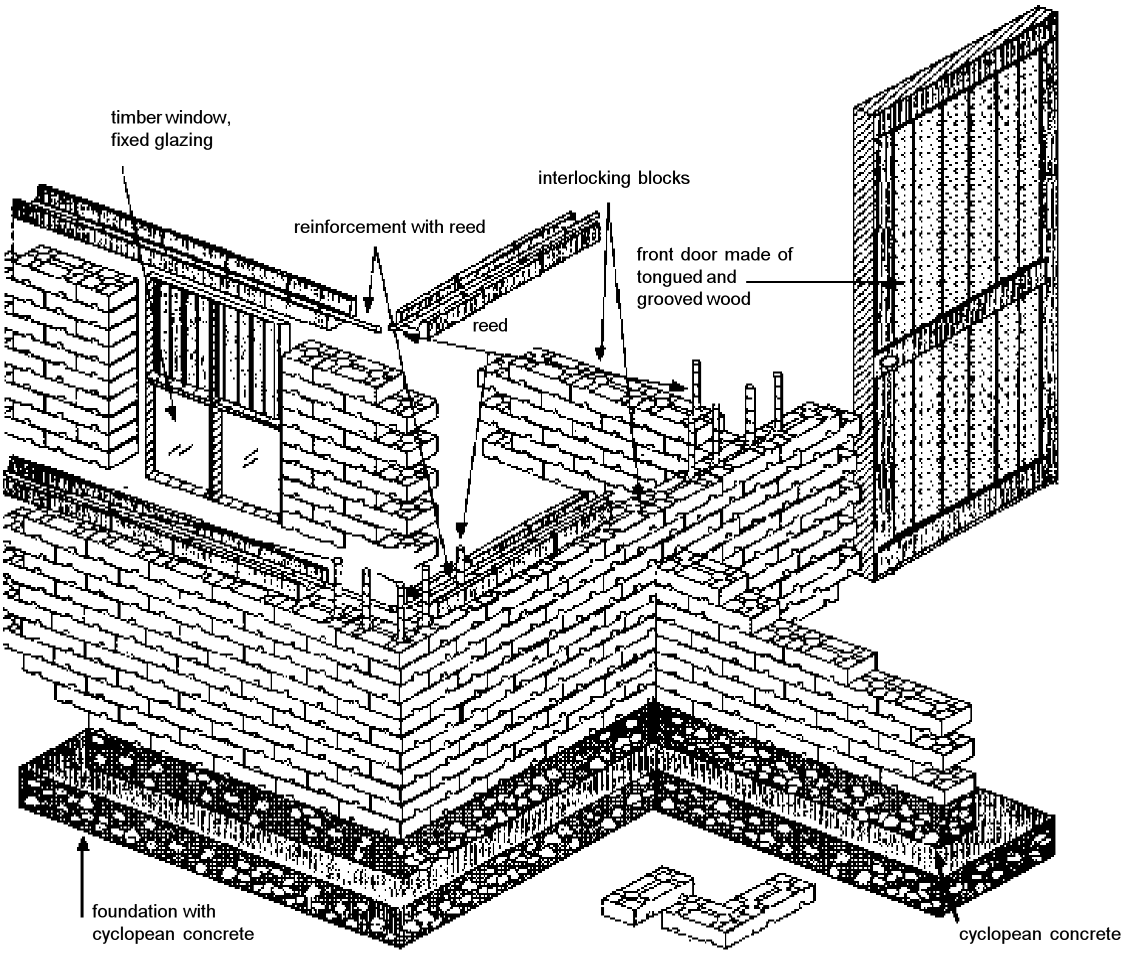

7-14 Building system invented by Universidad de los Andes, Mérida, Venezuela (Pereira 1995)

8-1 Traditional wattle and daub system, Venezuela (Minke 2001)

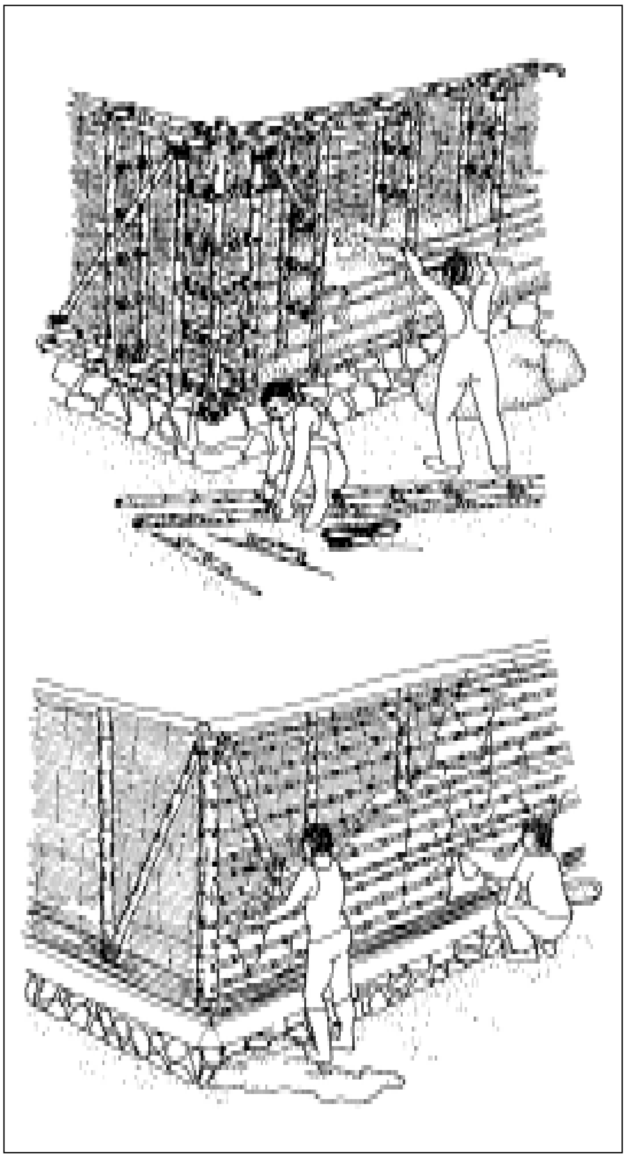

8-2 Wattle and daub systems (after Vorhauer 1979)

8. Wattle and daub

The wattle and daub wall system, which is called bahareque or quincha in Latin America, consists of vertical and horizontal elements made of timber or bamboo, forming a double layer grid which is filled with earth. Single-layer systems also exist, see Fig. 8-1. The vertical elements are usually tree trunks, the horizontal ones bamboo, reed or twigs. This is the most flexible system, as it is basically a timber grid structure with flexible joints and earth infill.

The disadvantage of this system is that it needs a lot of maintenance, as it cracks easily due to the thin cover of the wood elements and the swelling and shrinking of the wood. In practice there are often cracks and holes, where erosion starts and where insects can live; for instance in Latin America those that create the “decease mal de chagaz”. Fig. 8-3 shows a system, developed by CEPED, Camari, Brazil, with prefabricated wall elements, to be filled locally with earth. The design in Fig. 8-4 by the architects Kühn, Poblete and Trebilcock show an interesting combination of rammed earth columns and wattle and daub intersections. This design was developed during a workshop on earthquake-resistant house design, sponsored by DFG and held by the author in 1998 at Santiago de Chile.

A very poor, unstable solution is shown in Fig. 8-5, sometimes built in Latin America after earthquakes as a quick solution to create shelter. The timber frame walls are filled with adobes, mounted upright and held by barbed wire on both sides. As the distance between the vertical posts is too large and the wires are not tightened enough, the adobes easily fall down.

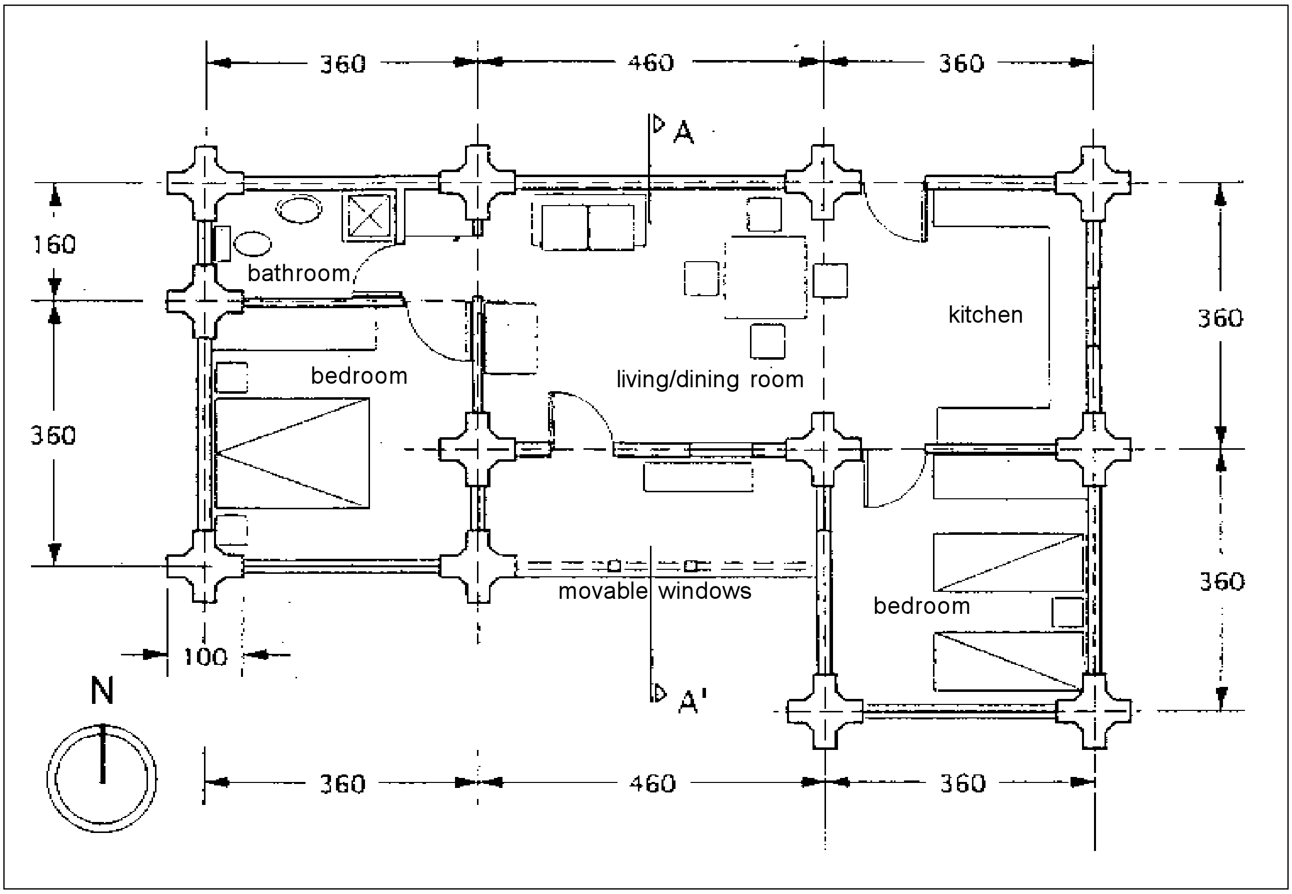

8-4

8-3 Prefabricated system CEPED, Brasil

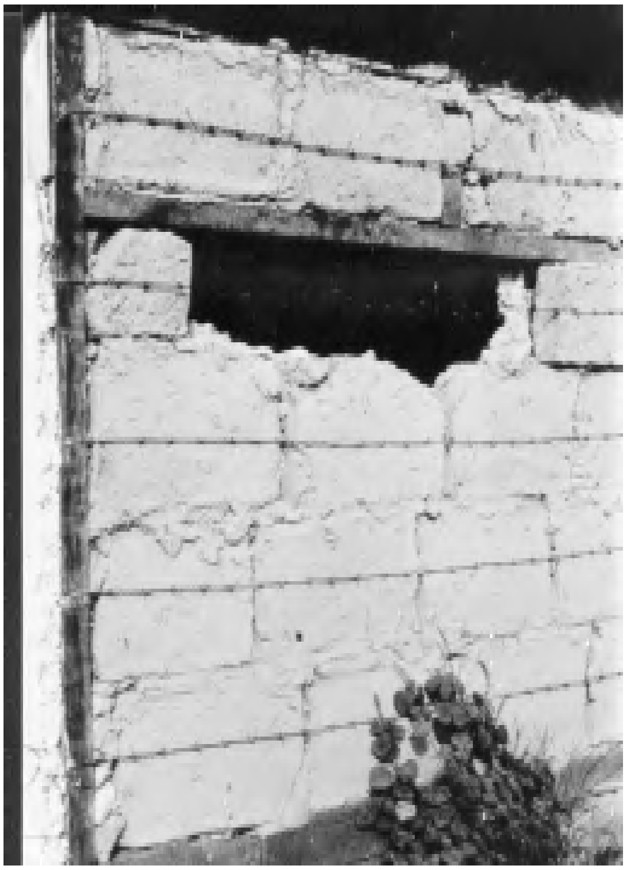

8-5 Dangerous solution, Chile

9-2 and 9-3 Wall with filled textile hoses

9. Textile wall elements filled with earth

At the Building Research Laboratory (FEB), University of Kassel, different solutions using textile earth-filled elements for walls were tested. Fig. 9-1 shows a prototype building, built in 1978 in Kassel. The wall consists of hoses made of jute fabric filled with earth and pumice aggregate, stacked without mortar but fixed with strips of cut bamboo driven through the layers. The elements were laid in a U-shape, the top of the wall was fixed to a ring beam, see Fig. 9-2. In order to avoid rotting of the fabric, the wall was covered with 4 layers of thin lime paint, see Fig. 9-3. The roof structure, built of tree trunks, rests on posts separated from the wall.

Within a research project concerning seismic-proof low-cost housing the FEB together with the University Francisco Marroquin and CEMAT, Guatemala, built a prototype house of 55 m^2 in Guatemala in 1978, see Fig. 9-7. In this case cotton hoses of 10 cm diameter were sewed, filled with earth and pumice (Fig. 9-4), dipped into lime milk (Fig. 9-5) and stacked between thin bamboo sticks (Fig. 9-6).

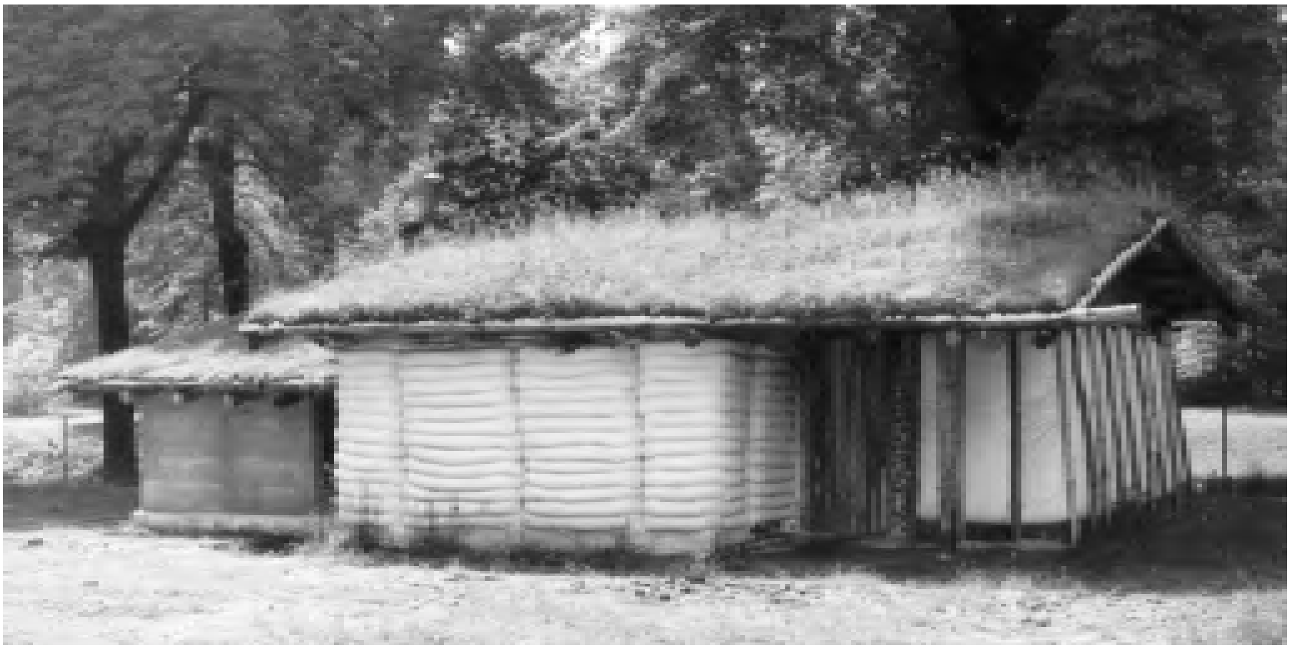

9-1 Low-cost housing prototype, University of Kassel, Germany 1978



9-4 to 9-6 Filling and stacking of textile elements

9-7 Earthquake resistant low-cost housing prototype, Guatemala 1978

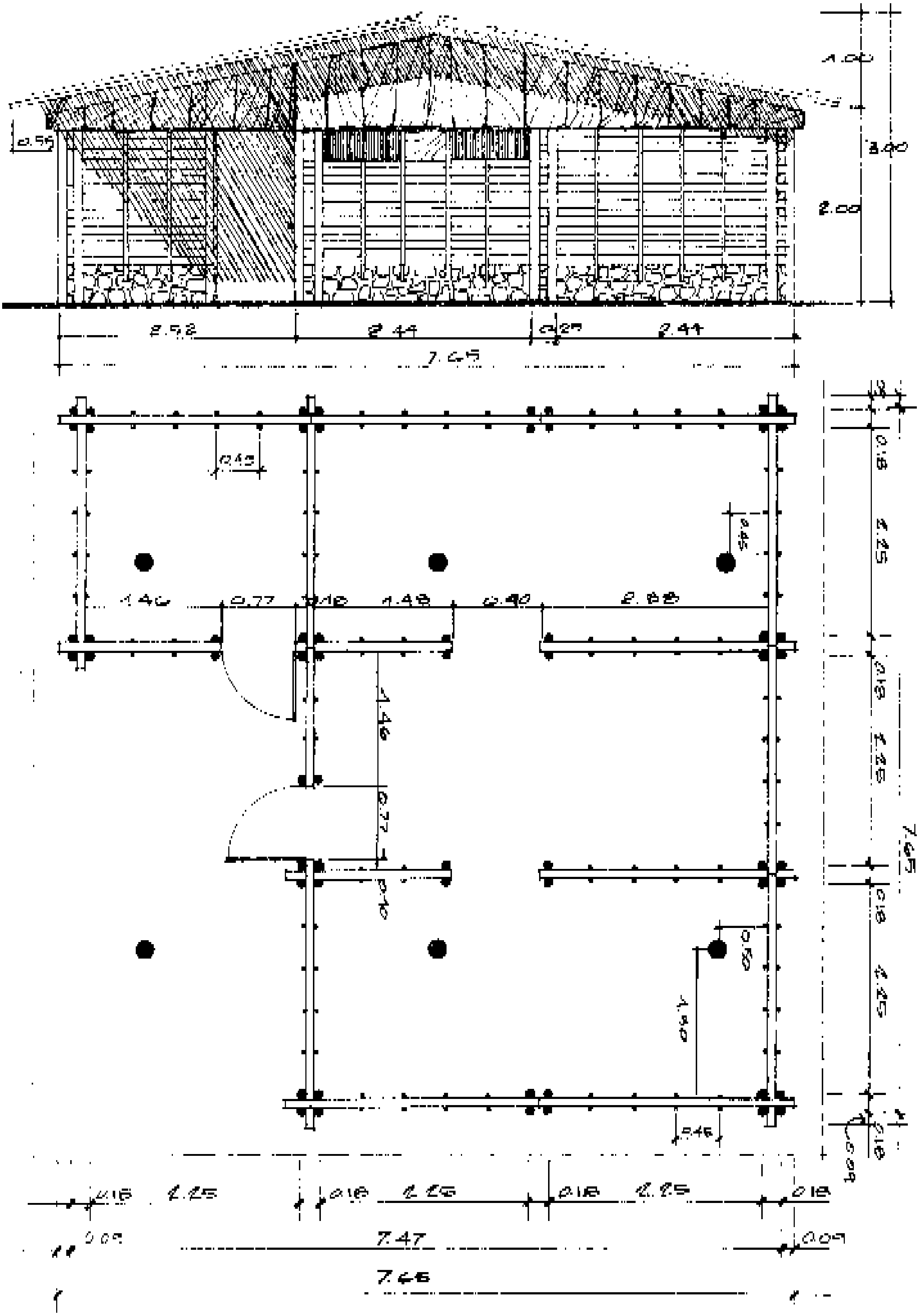

9-8 Earthquake resistant low-cost housing prototype, Guatemala 1978

Four vertical posts every 2.15 m and thin bamboo rods of 2 to 4 cm diameter every 45 cm stabilized the wall. The surfaces were painted with a paint made of 1 bag of lime, 4 kg kitchen salt, 2 kg alum and 30 liters of water. In the prototype structure, shown in Fig. 9-1, another new textile system was tested, which is to be seen at the right side of the house. It consists of a prefabricated U-shaped wall of jute fabric, kept by wooden sticks pushed into the earth. The container ("bag") formed in this way was then filled with pumice and earth, see Fig. 9-9. The model of this system is shown in Fig. 9-10 and 9-11.

9-9 to 9-11 Textile wall elements filled with earth

10. Critical joints and elements

10.1 Joints between foundation, plinth and wall

For a wall 30 to 40 cm of thick the foundation should usually be 20 cm wider and 40 cm or more high, see Fig. 10-1, depending on the rigidity of the soil. With a 50 cm thick rammed earth wall the plinth and foundation can be of the same width. The plinth is usually built of rubble random stone or bricks, but can also be of concrete with large stone aggregates. As it shelters the wall against splashing rain water, the height should be at least 30 cm. The joints between foundation and plinth as well as between plinth and wall have to have a good bond in order to be able to transfer shear forces. They should be situated every 30 to 50 cm. The easiest solution is to integrate a vertical wooden rod and to create a rough plinth surface , see Fig. 10-2. In the case of adobe walls the mortar must have a very good adhesion and a high bending strength. Horizontal damp-proof courses will interrupt the necessary bond.
A proposal by the author, not yet tested, is a "floating" foundation created by a channel of round pebbles which reduce the kinetic energy of the horizontal shocks, see Fig. 10-3.

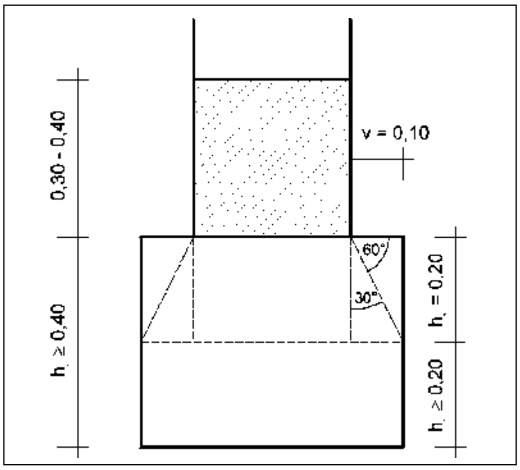

10-1 Foundation of external walls

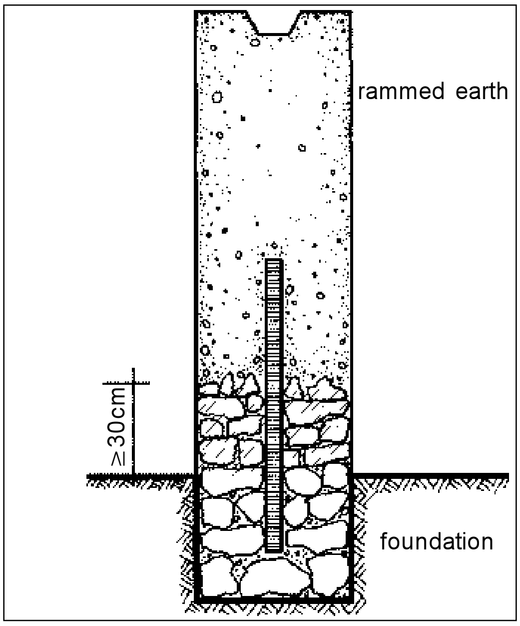

10-2

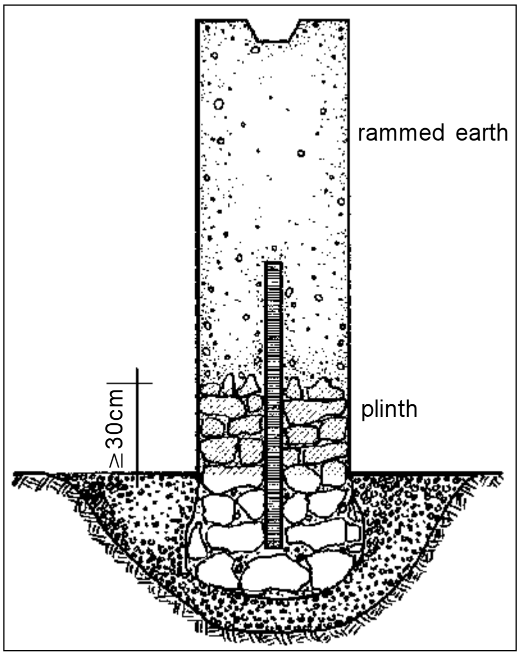

10-3 Floating foundation

10.2 Ring beams

Walls always have to be kept on top by a closed ring beam, which must be able to take bending loads when there are lateral forces against the wall. In order to prevent the walls from buckling and

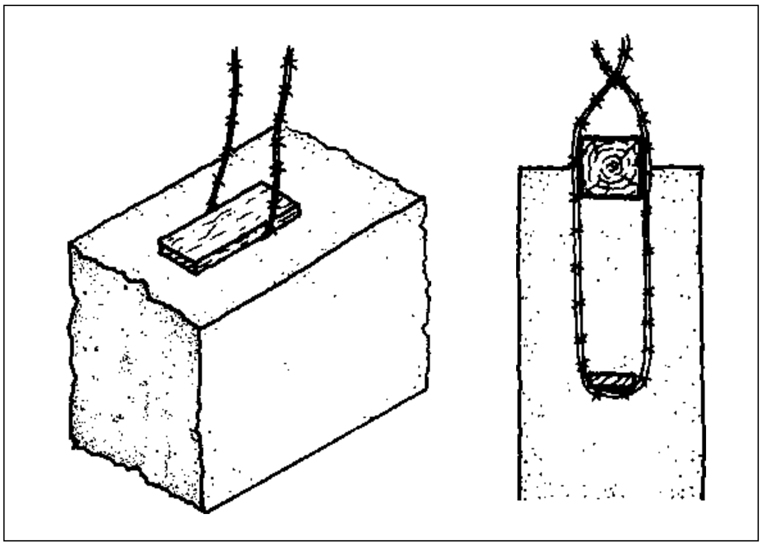

10-4 Fixing of ring beam

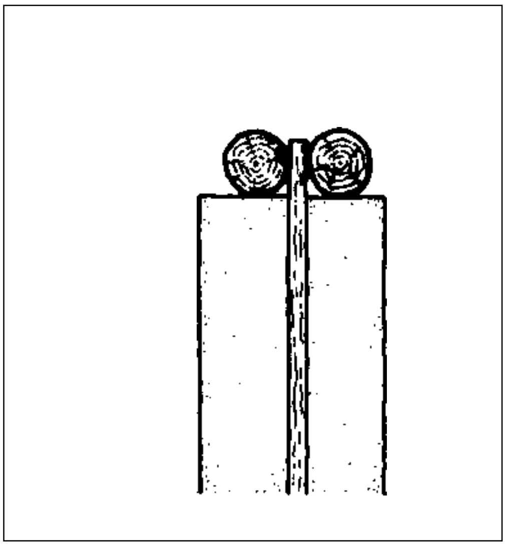

10-5 Fixing of ring beam

falling, the connection between wall and ring beam must be very strong. The ring beams can also act as a support for the roof structure. Fig. 10-4 shows one way of fixing a wooden ring beam to a rammed earth wall. A better solution is shown in Fig. 10-5 and 10-21, where a vertical interior reinforcement element of wood or bamboo is fixed to the foundation at the bottom and to a double ring beam at the top.

With adobe walls without vertical reinforcement elements it is not so easy to obtain a good bond between the masonry work and the ring beam. In the case of a reinforced concrete ring beam it is necessary to leave the last layer of adobes with open vertical joints so that the concrete will go into the gaps. In the case of adobe walls, if the ring beam is made from timber, as seen in Fig. 10-6, these elements must be covered by 2 cm of mortar with good adhesion values.

As corners of ring beams have to be able to transfer moments under seismic forces, they must be stiff. Figs. 10-6 to 10-8 and 10-12 show solutions for stiffening the corners for timber ring beams, while Figs. 10-9 to 10-11 show solutions for reinforced concrete ring beams.

10-6

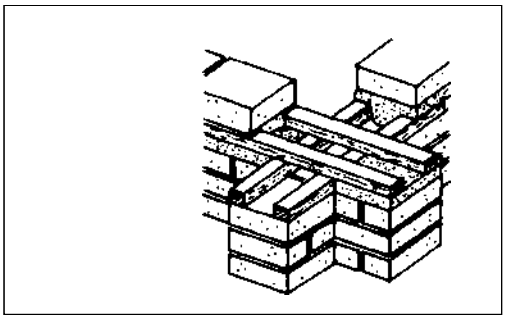

10-7

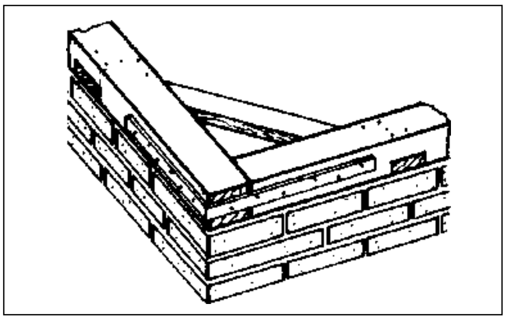

10-8

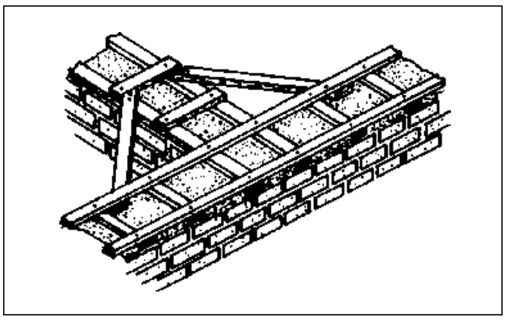

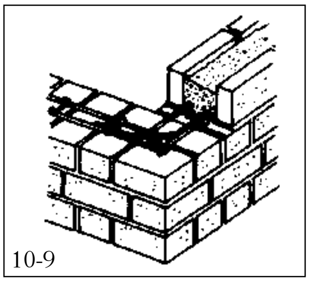
10-9

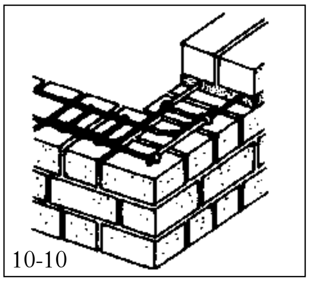
10-10

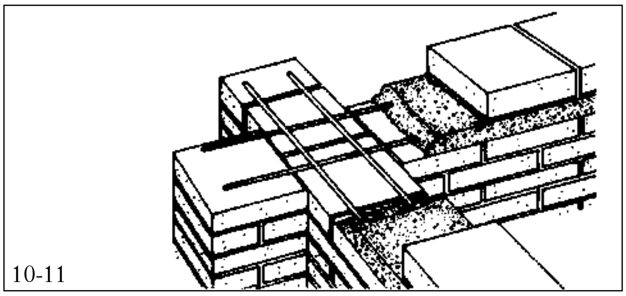
10-11

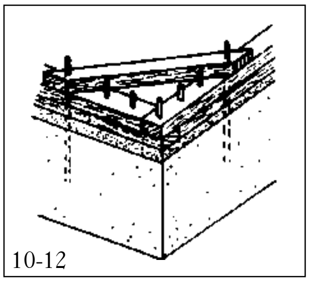
10-12

10-6 to 10-12
Solutions of
stiffening of corners

10.3 Ring beams which act as roof support

If the ring beams act as support for the roof structure, they have to be positioned centrally over the wall (Fig. 10-13). In the case of adobe walls the upper layer of adobe may break under seismic movement, therefore it is recommended that a top layer of burnt bricks be built for better stress distribution, see Fig. 10-14. In order to transfer the load uniformly from the roof beams to the wall, wedges of wood or concrete should be used. Also additional fixing is advisable, see Fig. 10-15.

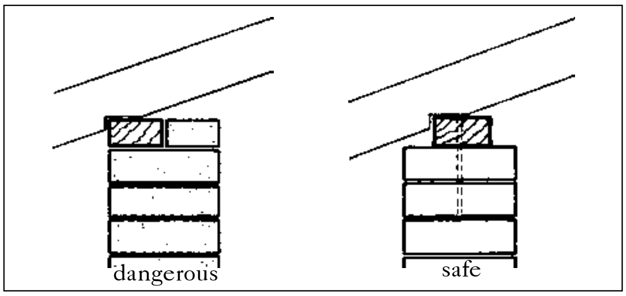

10-13

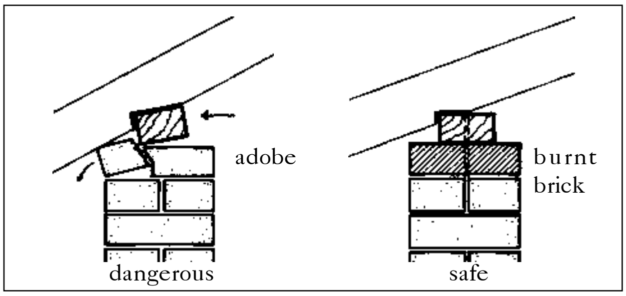

10-14

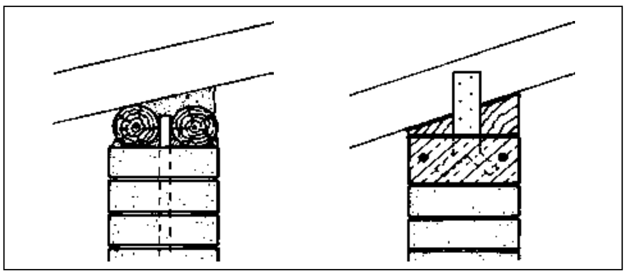
10-15

11. Gables

If gables are part of the wall, they are very weak against perpendicular forces. The best solution for avoiding this problem is to build a roof with four inclined planes (pyramidal shape), with which no gables appear. The second best solution is to build a light gable which is fixed only to the roof, as Fig. 11-1 shows. The third best solution is to build a gable wall and to stabilize it with a buttress, see Fig. 11-2. If a concrete skeleton structure is used, which is the most expensive solution, the gable also has to be stabilized by reinforced concrete elements, as shown in Fig. 11-3.

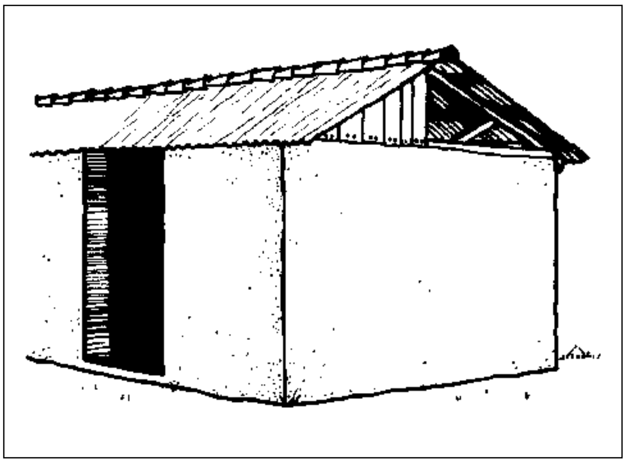

11-1 Gable fixed roof

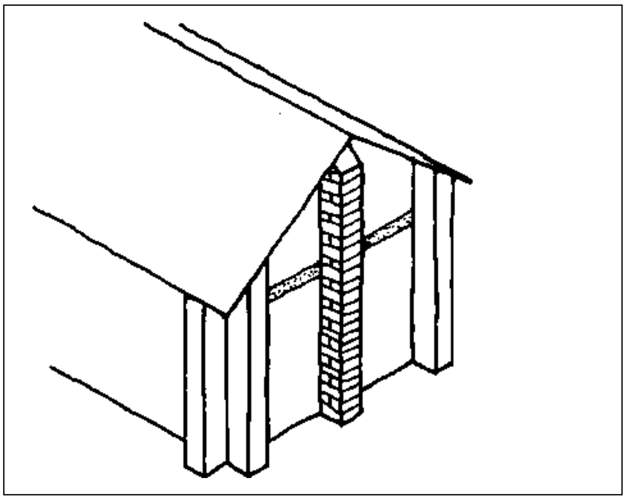

11-2 Stabilization by buttresses

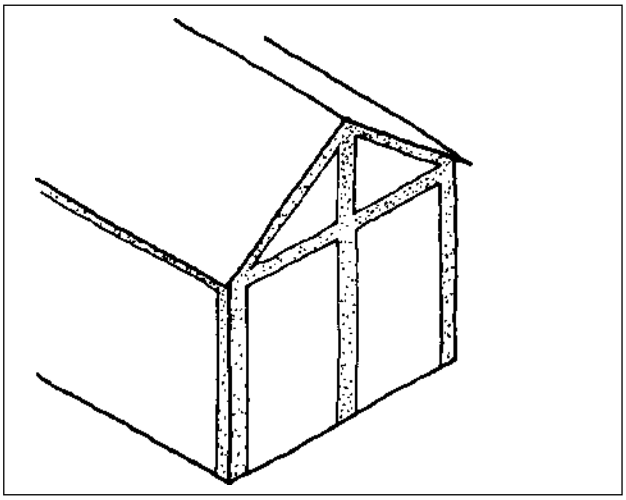

11-3 Stabilization by reinforced concrete structure

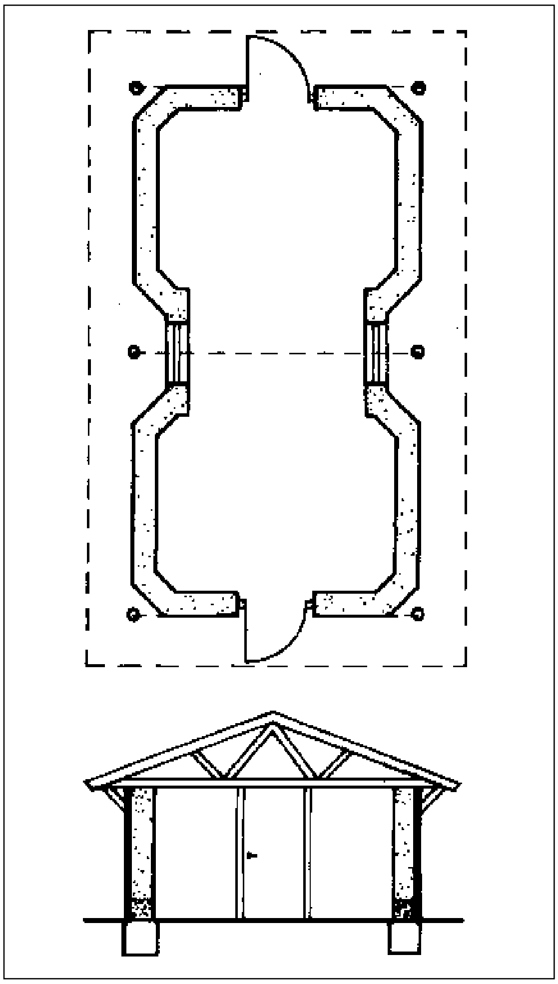

12-1

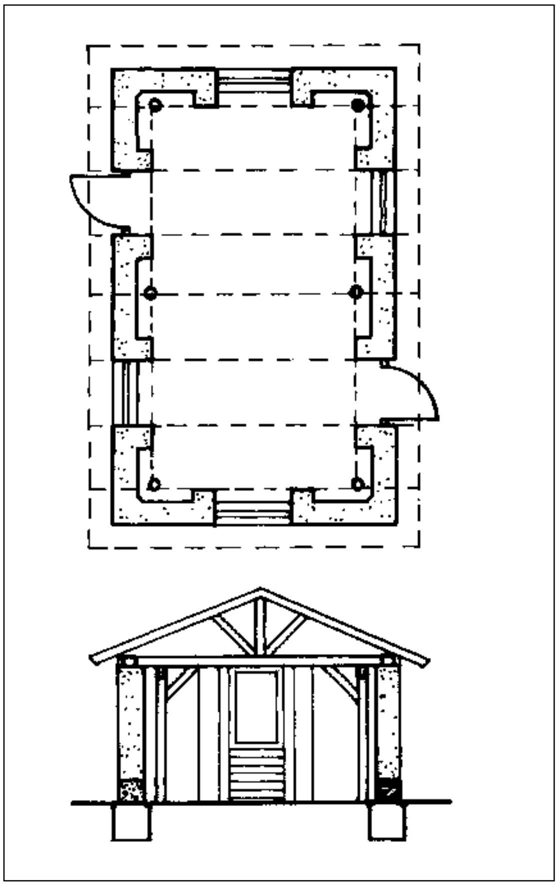

12-2

12. Roofs

12.1 General

The roof should be built as light as possible. Roofs with tiles or stone plates are not recommended, as they are heavy and in case of an earthquake the tiles or plates might fall into the house.
For earthquake-resistant houses a pyramidal roof with 4 inclined planes, which rest on a horizontal ring beam, is the best solution. A simple roof of this kind is shown in Figs. 12-8 and 12-9. The most used solution is a roof with one ridge and two inclined surfaces, but in this case the beams on which the roof rests, must form a ring and cross the gable, which needs extra stabilization, see chapter 11, or must be fixed to the roof instead being a part of the wall, see Fig. 11-1.
For smaller houses a roof with a single inclined plane is more economical, but in this case the beams on which the roof rests need to be interconnected, forming an inclined ring beam.

12.2 Separated roofs

As the frequency of the movements of roofs and walls differs during seismic activities, due to their different moment and weight, the safest solution is to separate the roof from the wall and have it resting on columns which are positioned inside or outside the wall. Then the roof and wall systems can move independently of each other. Figs. 12-1 to 12-4 show different proposals of the author, utilizing this idea. It is necessary to fix the columns to the ground at the bottom and to the roof structure at the top in such a way that these connections are partially moment-stiff, but still allow some ductility. At the top of wooden columns short diagonals give best solution, see Figs. 12-1 to 12-9.

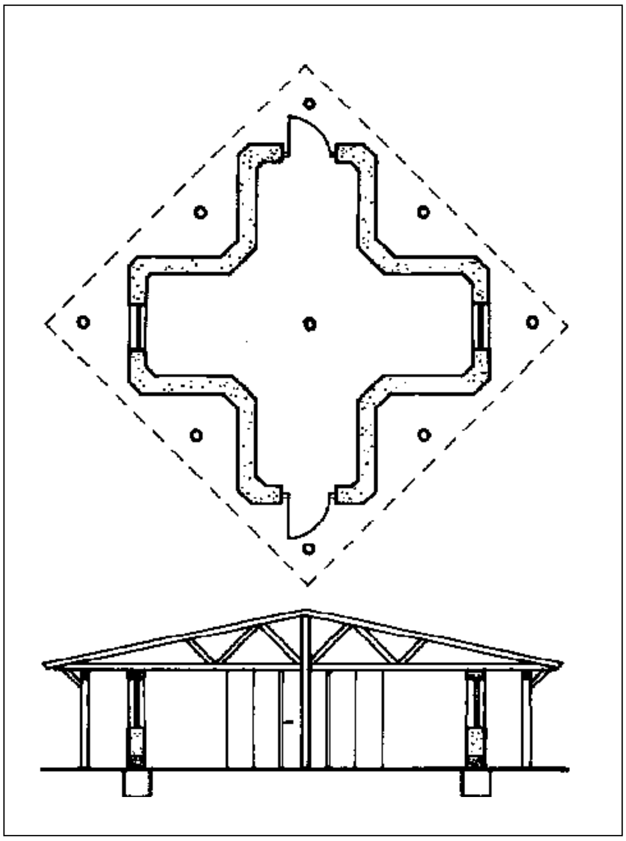

12-4

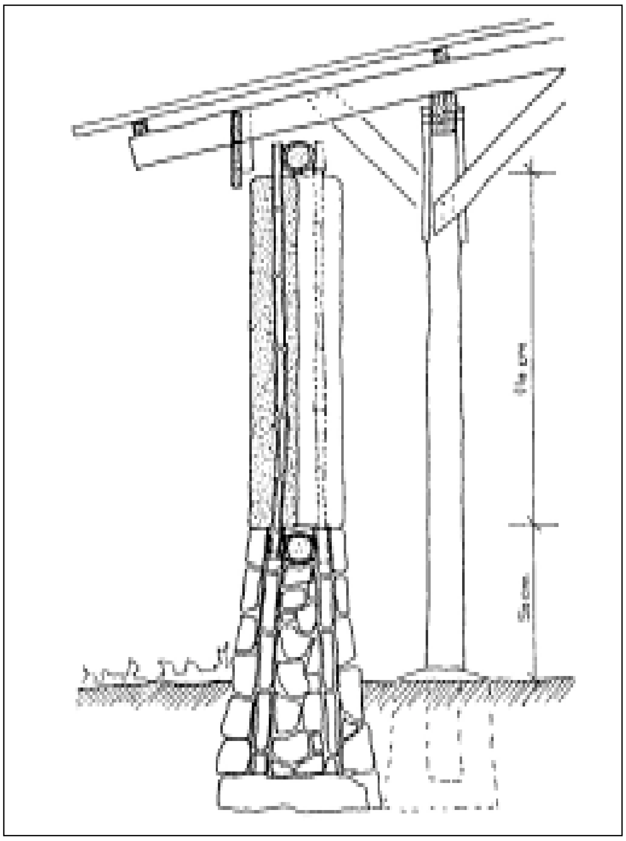

12-5 Reinforced rammed earth wall system
Guatemala, 1978 (Minke 2001)

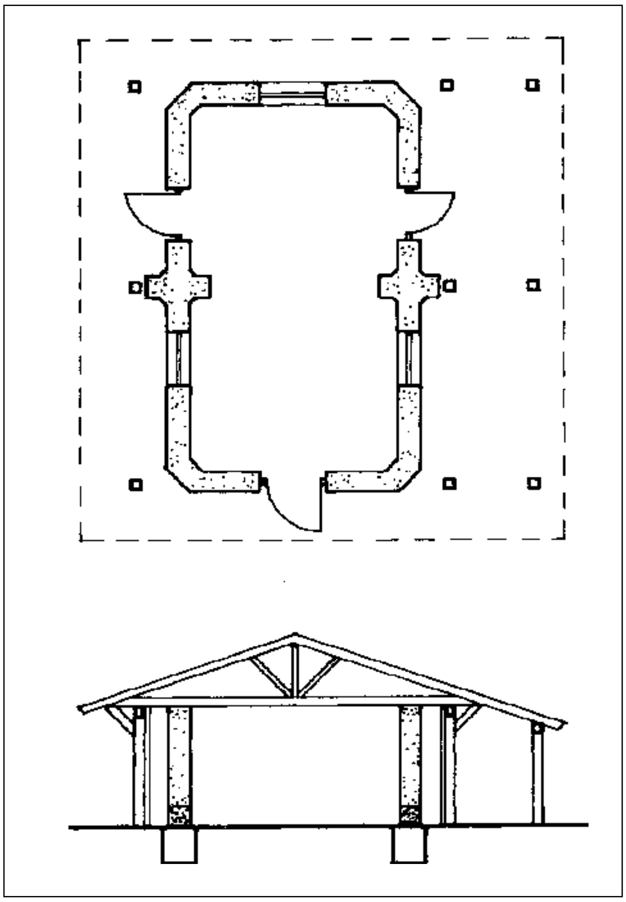

12-3
12-7 to 12- 9 Proposals for plans with separated roof structure

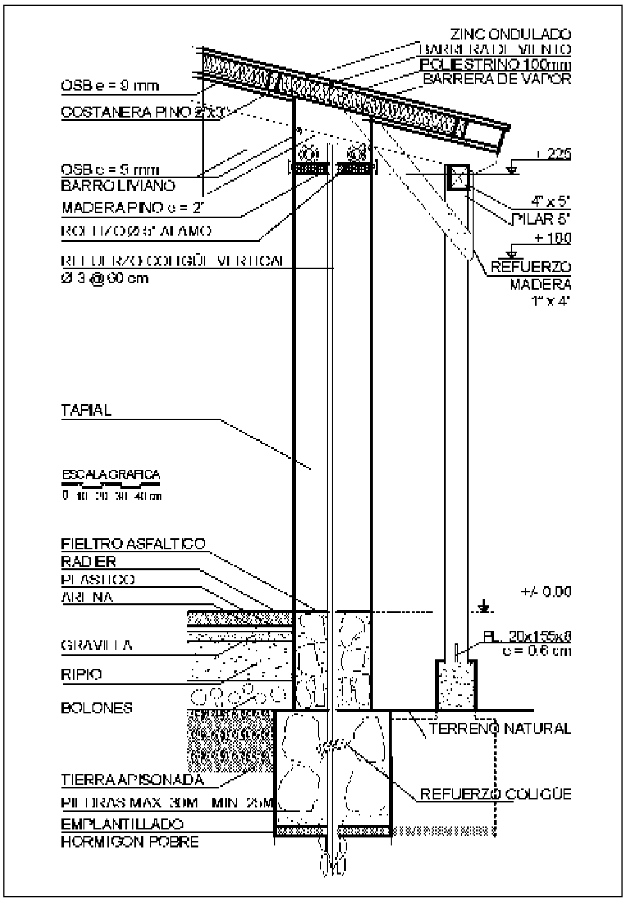

12-6 Reinforced rammed earth wall system
Alhué, Chile 2001

12-7 to 12- 9 Earthquake resistant low-cost housing project Pujili, Ecuador 1989

Figs. 12-5 and 12-6 show solutions of projects which were described in chapter 6.4. In the first case the columns are positioned inside, in the second case outside the walls.
Figs. 12-7 to 12-9 show the construction of an earthquake-resistant low-cost housing project built in 1989 at Pujili, Ecuador (design: Gernot Minke and FUNHABIT, Quito). In this project the walls are built of two U-shaped rammed earth elements 40 cm thick, separated by a door or a window. The roof rests on four wooden columns, which stand outside the walls at the corners of the square. Though the columns reach into the foundation and are fixed to the ring beam by diagonals, the roof system shows sufficient ductility within an earthquake.
The roof was built of eucalyptus trunks, covered by caña brava (a kind of reed) and then plastered with a mixture of clayey soil with pumice, animal dung, sisal fibers and waste car oil. After drying it was painted with white paint.
.

13. Openings for doors and windows

Openings within the walls destabilize the wall system. In an earthquake diagonal cracks often occur, starting at the window edges, see Figs. 4-1 and 4-2. Lintels have to penetrate into the wall for at least 40 cm in order to achieve a good bond, see Fig. 13-1. However, in this case the part above the lintel may be weak and come off in an earthquake, and therefore the best solution is to also use the lintel as a ring beam on which the roof structure rests. It is also recommended that the part below the window be built as a light flexible structure, for instance from wooden panels or wattle and daub. The following rules have to be taken into account, see Figs. 13-5 and 13-6:

a) The length of the windows should not be more than 1.20 m and not more than 1/3 of the length of the wall.
b) The length of walls between openings must be at least 1/3 of their height and not less than 1 m.
c) Doors must be opened towards the outside. Opposite the entrance door there should be a large window or another door, which acts as emergency exit, see Fig. 13-6.

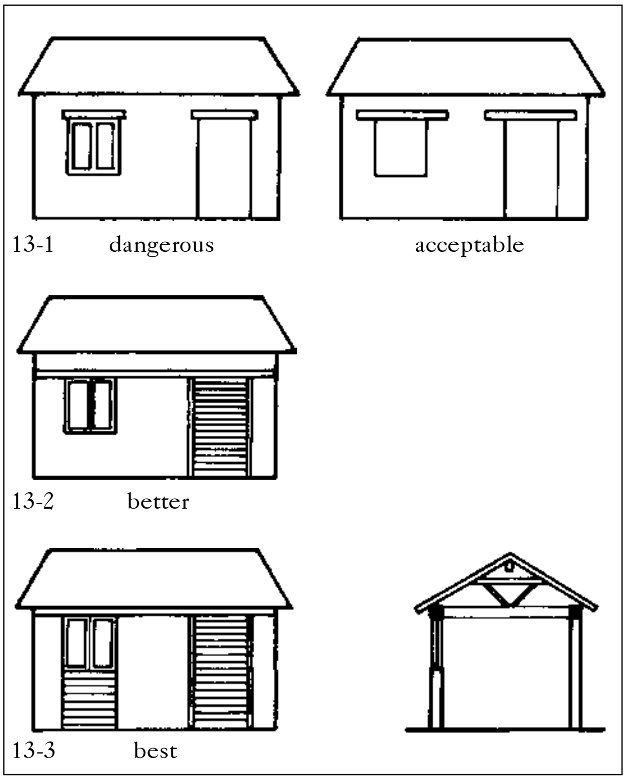

13-1 to 13-3

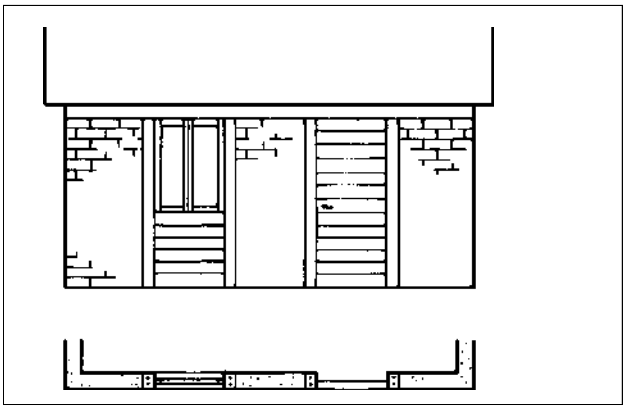

13-4 Stabilized openings

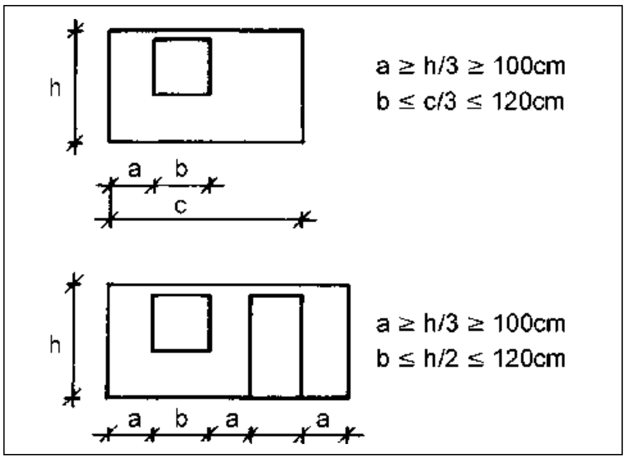

13-5 Recomendable dimensions of openings

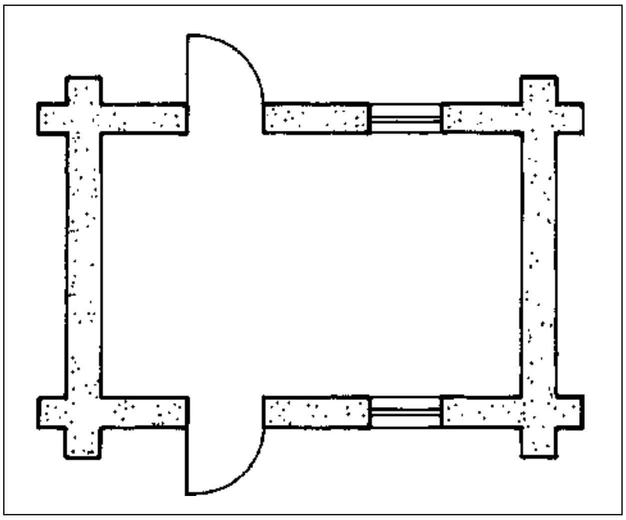

13-6 Recommendable positions of openings

14. Domes

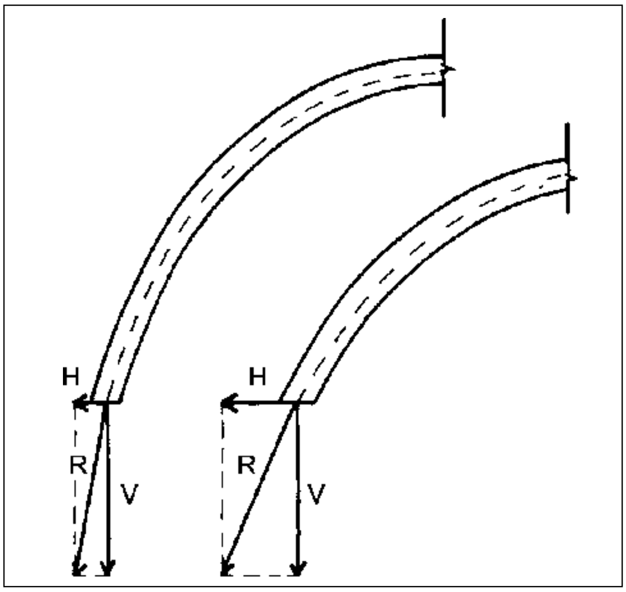

14-1 Resultant forces and their components (Minke 2000)

The problem with the structural design of domes is the stress transfer to the foundation. The inclined thrust force can be divided into a horizontal and a vertical component, see Fig. 14-1. The steeper the thrust (resultant), the smaller the horizontal component.

The support of a dome must be a circular horizontal ring of reinforced cement concrete, steel or possibly also timber, and it must be able to take the horizontal forces of the dome. The joint between dome and plinth or foundation must be inclined in order to resist the horizontal seismic movement, see Figs. 14-2 and 14-3. Because of the heavy weight of a dome, high ring beams and walls need to be stabilized by buttresses and the

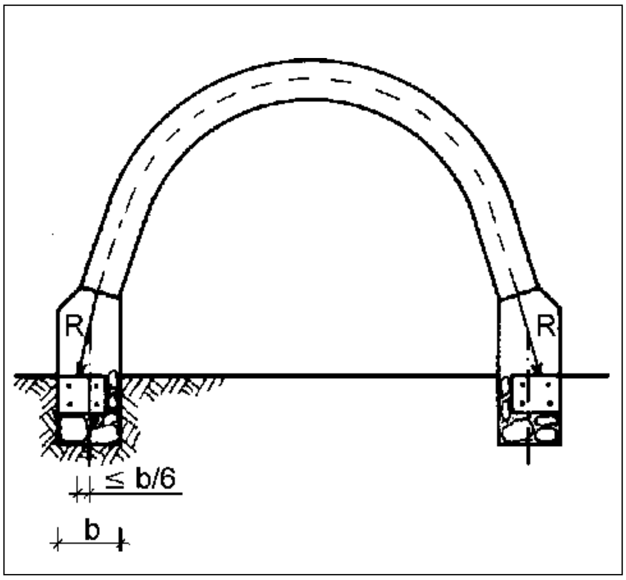

14-2 Allowable eccentricity

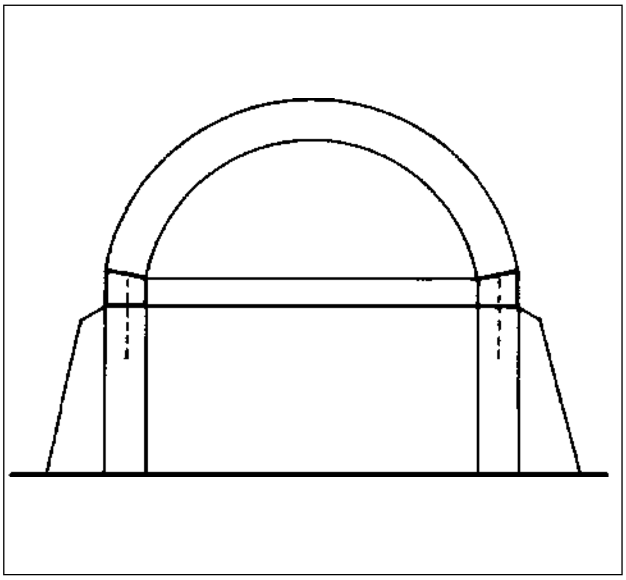

14-3 Ring beam stabilized by buttresses

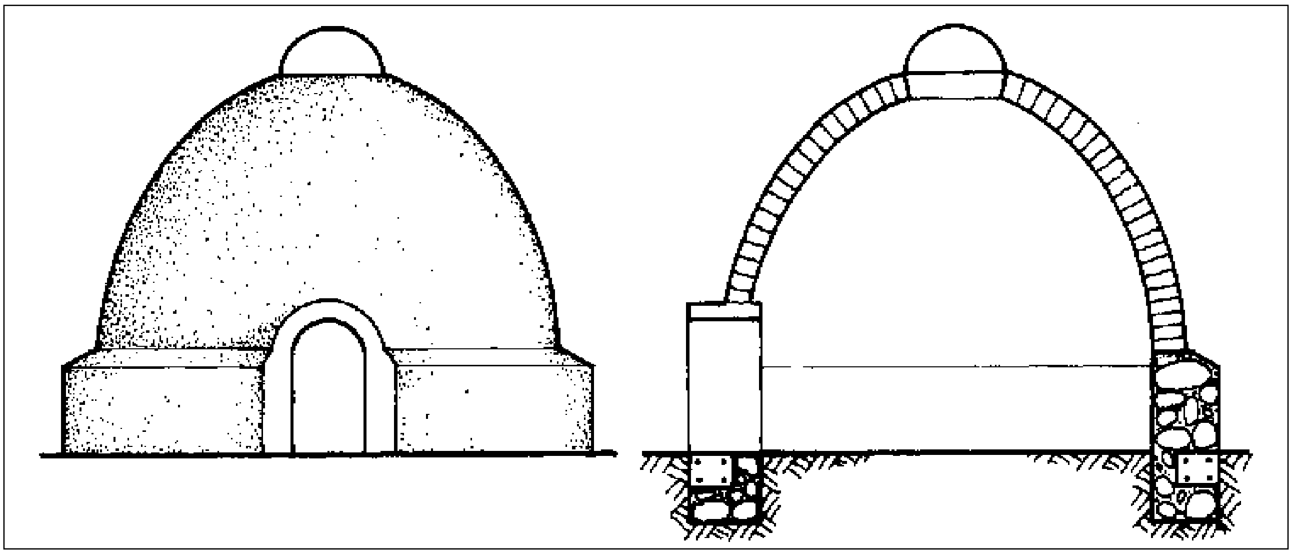

14-4 Stabilization of dome entrance

joint of ring beam and wall must be able to transfer large horizontal forces, see Fig. 14-3.

If the dome rests directly on a low plinth, the structure is much more stable in an earthquake, see Fig. 14-2. In this case the foundation has to act as horizontal ring beam, and is usually built of reinforced cement concrete. It is important to check that the resultant force of the dome stays within the center third of the width of the plinth measured above the ring beam, i.e. the eccentricity must not be more than 1/6 of the base.

If the dome starts above a plinth, it must be taken into account that openings like doors and windows destabilize the dome structure. Therefore the tops of door and windows must be designed as vaults which penetrate the dome and are able to transfer the stresses from the dome to their sides, see Fig. 14-4.

An earthquake-resistant dome must have a certain section, which guarantees that all forces are transferred vertically to the foundation without creating tensile or compressive ring forces. The resultant forces must always be within the center

Nr.	y	x	y	x	y	x	y	x	y	x	y	x	y	x
1	0,0000	1.0000	0,0000	1,0000	0,0000	1,0000	0,0000	1,0000	0,0000	1,0000	0,0000	1,0000	0,0000	1,0000
2	0,0452	0.9854	0,0454	0,9875	0,0479	0,9885	0,0470	0,9902	0,0422	0,9812	0,0494	0,9918	0,0469	0,9929
3	0,0973	0,9674	0,0982	0,9720	0,1013	0,9750	0,1007	0,9783	0,1016	0,9807	0,1036	0,9823	0,1013	0,9844
4	0,1469	0,9483	0,1508	0,9556	0,1544	0,9608	0,1543	0,9658	0,1555	0,9696	0,1578	0,9724	0,1556	0,9755
5	0,2001	0,9279	0,2030	0,9381	0,2073	0,9456	0,2077	0,9526	0,2093	0,9579	0,2118	0,9620	0,2098	0,9662
6	0,2506	0,9061	0,2548	0,9195	0,2600	0,9295	0,2610	0,9386	0,2629	0,9456	0,2657	0,9511	0,2640	0,9565
7	0,3006	0,8827	0,3061	0,8998	0,3123	0,9124	0,3139	0,9237	0,3164	0,9328	0,3195	0,9396	0,3180	0,9462
8	0,3496	0,0575	0,3569	0,8782	0,3642	0,8940	0,3667	0,9079	0,3697	0,9188	0,3732	0,9274	0,3720	0,9354
9	0,3974	0,8303	0,4069	0,8552	0,4156	0,8744	0,4191	0,8911	0,4227	0,9041	0,4267	0,9145	0,4258	0,9241
10	0,4441	0,8011	0,4562	0,8305	0,4665	0,8533	0,4711	0,8730	0,4755	0,8885	0,4800	0,9008	0,4795	0,9121
11	0,4893	0,7695	0,5043	0,8038	0,5167	0,8306	0,5226	0,8536	0,5280	0,8718	0,5331	0,8863	0,5331	0,8993
12	0,5327	0,7355	0,5513	0,7749	0,5660	0,8060	0,5736	0,8328	0,5800	0,8540	0,5859	0,8708	0,5864	0,8856
13	0,5738	0,6987	0,5967	0,7436	0,6143	0,7795	0,6239	0,8103	0,6316	0,8347	0,6384	0,8542	0,6396	0,8714
14	0,6124	0,6592	0,6402	0,7097	0,6613	0,7507	0,6733	0,7860	0,6827	0,8140	0,6905	0,8364	0,6924	0,8561
15	0,6479	0,6170	0,6815	0,6731	0,7067	0,7194	0,7217	0,7596	0,7330	0,7917	0,7422	0,8173	0,7450	0,8397
16	0,6799	0,5721	0,7200	0,6337	0,7502	0,6855	0,7688	0,7309	0,7825	0,7674	0,7932	0,7966	0,7971	0,8220
17	0.7081	0,5246	0,7554	0,5913	0,7913	0,6407	0,8143	0,6998	0,8309	0,7411	0,8436	0,7743	0,8468	0,8030
18	0,7322	0,4750	0,7872	0,5462	0,8296	0,6090	0,8578	0,6658	0,8780	0,7124	0,8930	0,7500	0,8999	0,7825
19	0,7522	0,4235	0,8149	0,4904	0,8646	0,5663	0,8988	0,6290	0,9234	0,6811	0,9414	0,7235	0,9503	0,7602
20	0,7680	0,3707	0,8384	0,4405	0,8957	0,5207	0,9369	0,5891	0,9687	0,6470	0,9883	0,6947	0,9898	0,7360
21	0,7801	0,3166	0,8576	0,3967	0,9227	0,4725	0,9716	0,5461	1,0076	0,6099	1,0330	0,6632	1,0402	0,7096
22	0,7887	0,2624	0,8725	0,3436	0,9452	0,4221	1,0023	0,5002	1,0453	0,5696	1,0767	0,6287	1,0951	0,6807
23	0,7944	0,2076	0,0836	0,2096	0.9633	0,3700	1,0286	0,4517	1,0795	0,5282	1,1172	0,5912	1,1403	0,6491
24	0,7970	0,1526	0,8912	0,2350	0,9771	0,3165	1,0504	0,4009	1,1085	0,4789	1,1544	0,5505	1,1930	0,6145
25	0,7994	0,0975	0,8961	0,1801	0,9870	0,2623	1,0675	0,3485	1,1350	0,4309	1,1879	0,5065	1,2236	0,5768
26	0,8000	0,0425	0,8987	0,1251	0,9936	0,2075	1,0804	0,2948	1,1557	0,3798	1,2170	0,4586	1,2606	0,5358
27	0,8000	0,0000	0,8998	0,0700	0,9974	0,1526	1,0894	0,2404	1,1719	0,3270	1,2415	0,4101	1,2933	0,4915
28			0,9000	0,0000	0,9993	0,0975	1,0951	0,1856	1,1836	0,2731	1,2611	0,3585	1,3222	0,4443
29					0,9999	0,0425	1,0983	0,1306	1,1916	0,2185	1,2761	0,3054	1,3459	0,3944
30					1,0000	0,0000	1,0997	0,0755	1,1965	0,1636	1,2867	0,2513	1,3648	0,3425
31							1,1000	0,0205	1,1990	0,1086	1,2936	0,1966	1,3789	0,2892
32							1,1000	0,0000	1,1999	0,0535	1,2976	0,1416	1,3887	0,2349
33									1,2000	0,0000	1,2995	0,0865	1,3949	0,1601
34											1,3000	0,0315	1,3983	0,1251
35											1,3000	0,0000	1,3997	0,0700
36													1,4000	0,0150
37													1,4000	0,0000
	h = 0,8 r		h = 0,9 r		h = 1,0 r		h = 1,1 r		h = 1,2 r		h = 1,3 r		h = 1,4 r	
α	72,6	Grad	75,0	Grad	76,9	Grad	78,5	Grad	79,7	Grad	80,7	Grad	81,6	Grad
A	5,3374	r^2	5,7789	r^2	6,2195	r^2	6,6941	r^2	7,1605	r^2	7,6426	r^3	8,1514	r^2
V	16,1064	r^3	18,2911	r^3	20,4262	r^3	22,8921	r^3	24,9307	r^3	27,1455	r^3	20,5145	r^3

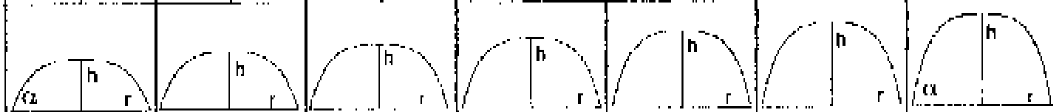

14-7
Dome coordinates for 7 different proportions (Minke 2000)

of the dome wall, the eccentricity must be less than 1/6.

In a dome with a semicircular section the resultants of the forces act inside the center line, thus creating tensile ring forces which can easily lead to collapse, see Fig. 14-5. In Fig. 14-6 the ideal section line, which does not create ring forces, is shown in contrast to other usual curves. This curve was derived by a computer program. However, it can be found for 7 different proportions of height to radius, when using the coordinates listed in Fig. 14-7, where **r** is the radius and **h** the height of the dome - always measured to the center of the wall, α is the angle of inclination at the bottom, **A** the area and **V** the volume.

In order to construct such a structurally optimized dome without formwork, at the FEB a rotational guide was developed which is fixed to a vertical mast. At the end of the rotating arm an angle is fixed against which the mason lays the adobe or soil block. So each block can be placed in position exactly. Figs. 14-8 to 14-11 show the application of this construction technique for a dome of 8.80 m free span and 5.50 m height, built in La Paz, Bolivia, in 2000. The adobes for this dome were made by hand in a special mould with rounded edges,in order to provide good sound distribution within the dome. The acoustic behavior of the dome was further refined by deepening the vertical joints in order to achieve some sound absorption and by a slight cantilevering position, which avoids the sound focusing effect towards the center of the come.

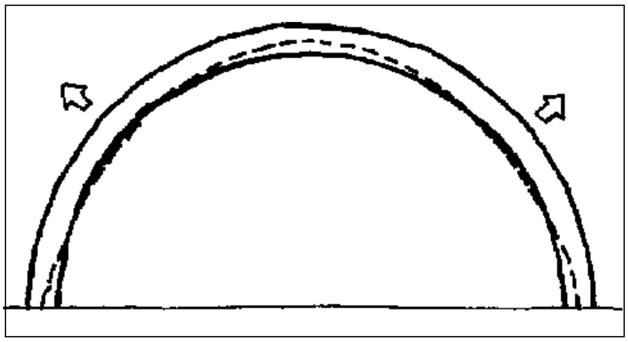

14-5 A semicircle is dangerous for dome section (Minke 2001)

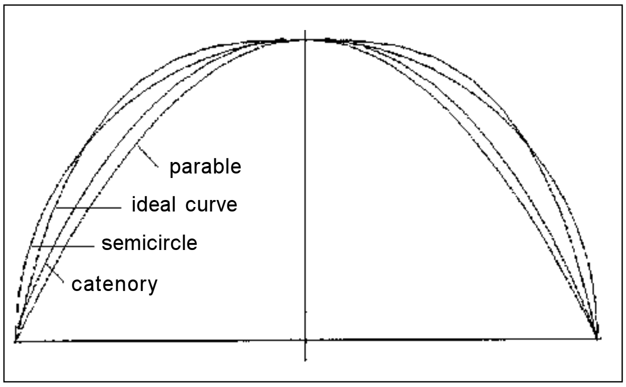

14-6 Ideal section curve in relation to other well known curves (Minke 2001)

14-9

14-8

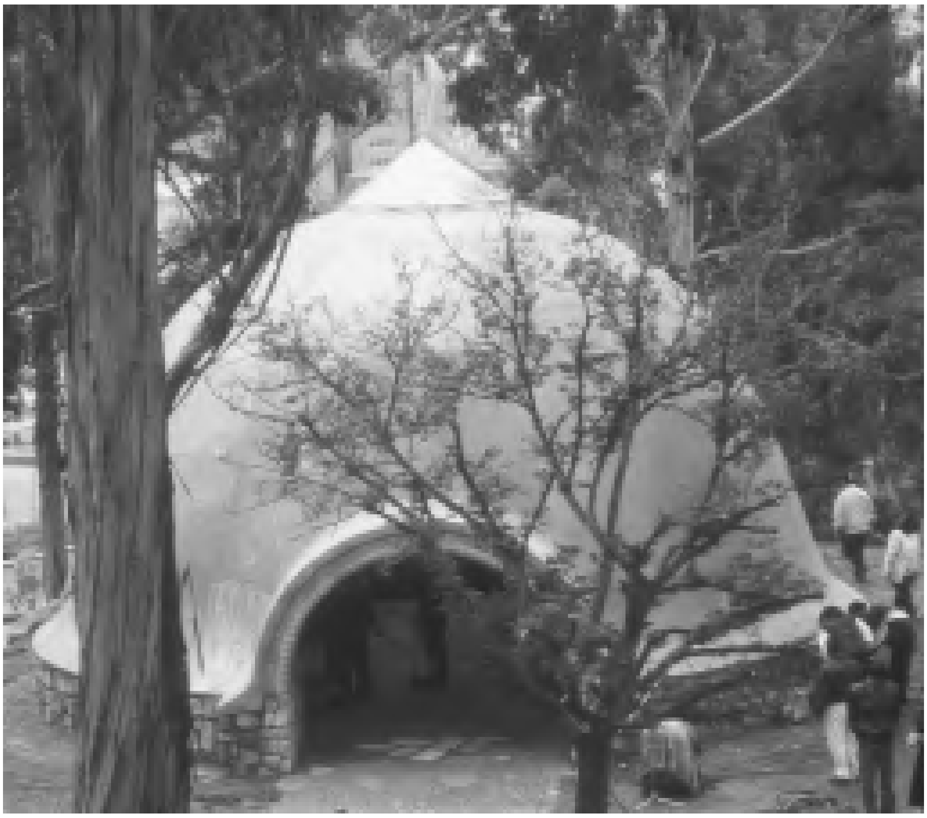

14-10

14-11 to 14-11
Building of an adobe dome
La Paz, Bolivia 2000

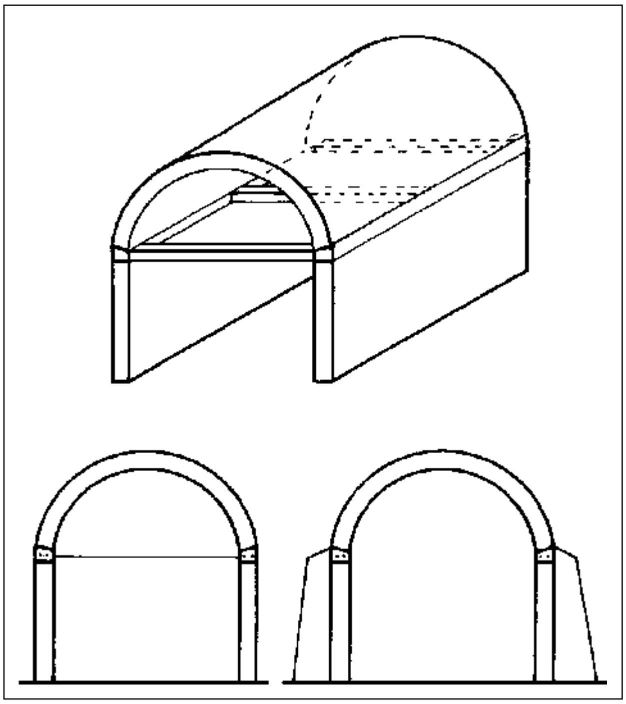

15-1 Ring beams stabilized by tensors or buttresses

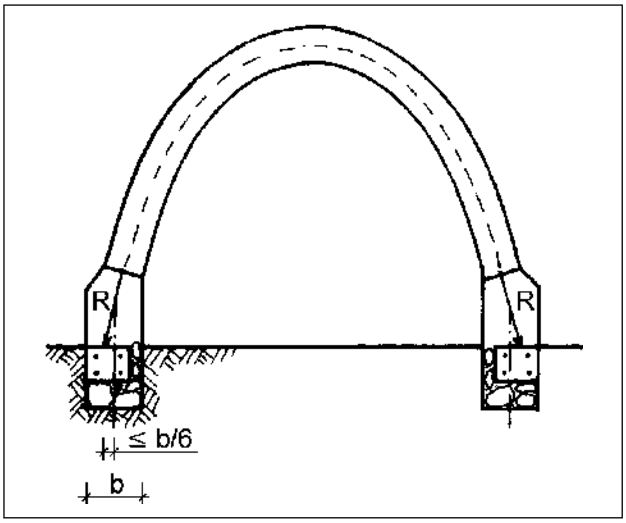

15-2 Permitted eccentricity

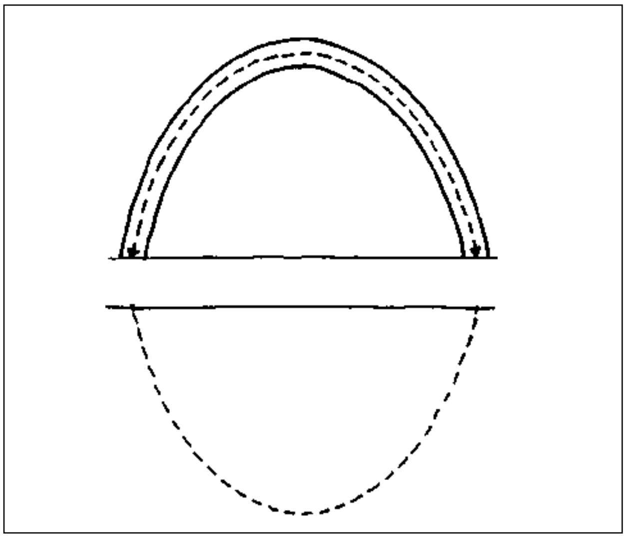

15-3 Inverted catenary as ideal section for vaults (Minke 2000)

15. Vaults

In an earthquake vaults are less stable than domes, as described in chapter 14. It is advisable to have a square plan. If a rectangular plan is desired, buttresses or tensile elements connecting the beams are required, see Fig. 15-1. To create more stability, a vault should start directly above a low plinth instead of above a wall, see Fig. 15-2.
The vertical section of a vault should have the shape of an inverted catenary if it only has to transfer its own load. Then it only transfers forces in compression, see Fig. 15-3.

An important rule for the design of plinth and foundation is that the resultant force at the bottom of the vault should go through the inner third of the surface of the foundation. This means that the eccentricity should be less than 1/6, see Fig. 15-2. The foundation must have a reinforced concrete beam, which can also withstand the additional horizontal forces created by an earthquake.
Fig. 15-4 shows a section of a building which was built in an earthquake-prone area in Bolivia. Its plinth has structurally dangerous proportions, as the resultant force from the vault creates a bending moment in the plinth and does not stay within the inner third of the wall, as necessary.

The facades of vaults should be stabilized like the gables described in chapter 11. However, the best solution is to build them light and flexible with "wattle and daub", mats covered with earth plaster, or with timber planks.

Fig. 15-5 shows a design of the author for an earthquake-resistant low-cost-housing project in the region of Gujarat, India.

A proposal for stabilizing adobe vaults by bamboo arches also guaranteeing a certain ductility was realized within a test structure built in 2001 at the University of Kassel, see Figs. 15-6 to 15-9. This was built with special U-shaped adobes which rest on an arch, built of three layers of split bamboo. The bamboo sections were kept in

water for 3 days in order to be able to bend them. Then they were bent over sticks, which were pushed into the ground in a catenary line, see Fig. 15-7. In order to keep the arch in form, the three bamboo sections were wrapped together with galvanized steel wire every 50 cm. The arch was put into a vertical position and fixed to steel bars which stick out of the plinth. This connection must be able to take tensile forces within an earthquake. Above the adobe vault a membrane of PVC-coated polyester fabric is fixed and tightened to the plinth. This has two functions: firstly it gives shelter against rain and wind, and secondly it pretensions the arch and therefore increases its stability against movements created by the earthquake.
These movements may deform the vault to a certain extent, so that the adobe joints may open, but the vault will not collapse as it is held by the tensile prestressed membrane at the top and the compressive prestressed bamboo arch underneath. Thus the stability of this structure depends mainly on its ductility. However, it must be taken into account that if the pretension of the membrane is high, the optimal section of the vault is more like an ellipse.

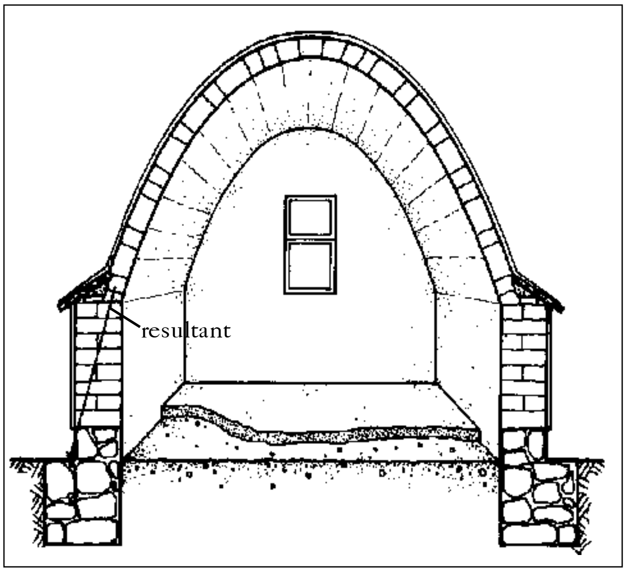

15-4 Badly designed plinth with eccentric thrust line

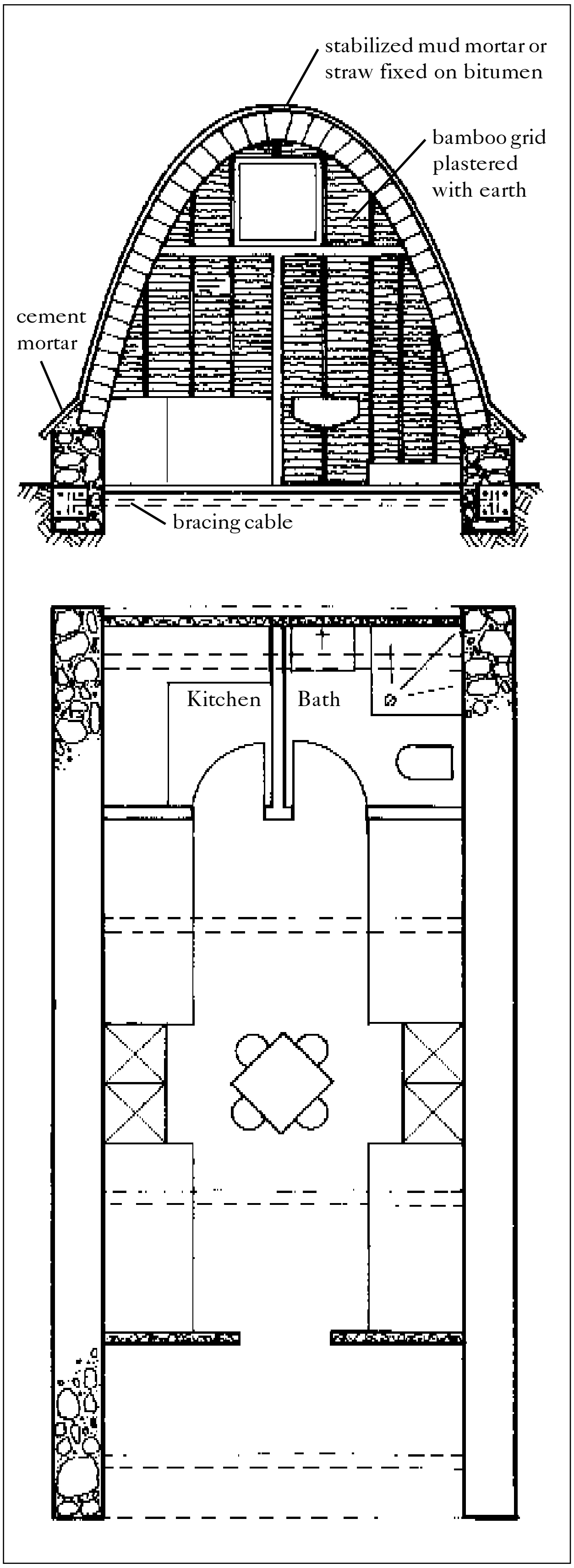

15-5 Proposal for an earthqauke resistant vault structure for India

15-6 Production of special adobes

15-7 Construction of the arc with split bamboo

15-8 and 15-9
Earthquake resistant vault reinforced with bamboo
FEB, Kassel, 2001

16. Plasters and paints

Adobe walls have to be plastered by mortars made of earth or lime, or by earth stabilized with cement, lime or bitumen. A pure cement plaster should never be used, as it is too brittle and tends to crack under thermal loads (through expansion and retraction) and under mechanical impacts.
If water penetrates through these cracks, the earth underneath will expand creating more cracks, or even burst off.

The church at Ranchos de Taos, New Mexico, see Fig. 16-1, which was built in 1815 with adobe walls, was plastered with cement plaster during a restoration in 1967. Eleven years later the plaster had to be taken off, as rain water had penetrated through the many cracks and caused the destruction of many parts of the surface.

If an earth mortar is used for plastering, it is recommended that the surface be made waterproof by applying a paint of lime or lime-casein. Rammed earth walls do not need plastering. It is better to smoothe the surface with a trowel while it is still humid and then add two or three layers of thin lime or lime-casein paint. The first layer must have a high water content, so that it penetrates 2 or 3 mm deep into the wall.

16-1
Church San Francisco de Asís, Ranchos de Taos, EEUU

Bibliographic references

Equipo Maiz (ed.): La casa de adobe sismorresistente, El Salvador 2001

Grohmann, M.: Introducción al diseño sismorresistente, in: Laboratorio de Construcción Experimental, Universidad de Kassel (ed.): Viviendas sismoresistentes (Report, not published),
Kassel, German, 1998

Houben, H.; Guillaud, H.: Earth Construction Primer, Brussels, Belgium 1984

ININVI (Instituto Nacional de Investigación y Normalización de la vivienda de Perú): Construcciones en adobe, Lima, Peru

Minke, G.: Earth Construction Handbook, WIT Press, Southampton, UK 2000

Pereira, G.H.: Habiterra (Catalogue of exposicion), Bogota, Colombia, 1995

Sibtain, S.N.: To build a village, Parramata, N.S.W. Australia, 1982

Tolles, E.L.; Kimbro, E.E. et al.: Seismic stabilization of historic adobe structures, Getty Conservation Institute, Los Angeles, USA, 2000

Vorhauer, K.: Low Cost / Self Help Housing (Gate Modul 6/6, Eschborn, Germany, 1979)

Weinhuber, K.: Building with Interlocking Blocks,
in: basin at gate/gtz (ed.) Wall Building, Technical Brief,
Eschborn, Germany, 1995

Yazdani, H.: Erhöhung der Lebensdauer von Lehmbauten in erdbebengefährdeten Gebieten Afghanistans (Doctoral thesis, not published), University of Kassel, Germany, 1985

The figures without sources quoted are from the author.

About the author

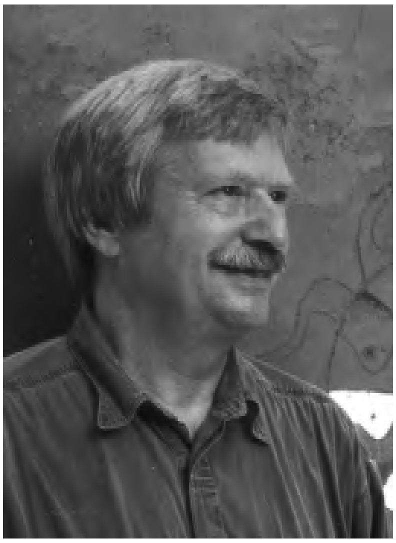

Gernot Minke is architect and professor at Kassel University, Germany, where he heads the Forschungslabor für Experimentelles Bauen (FEB) (Building Research Laboratory). Since 1974 more than 30 research and development projects have been realized in the field of ecological building, low-cost-housing and especially building with earth.

In his private architectural office he has designed many private and public buildings, all of them having earth as a predominant building material. His buildings stand not only in Europe, but also in Central and South America and India.

He is the author of several books, more than 200 articles, has been invited to more than 30 international conferences and was visiting professor in Mexico, Guatemala, Paraguay and Venezuela.

Deutsche Gesellschaft für
Technische Zusammenarbeit (GTZ) GmbH

SCIENCE EXPERIMENTS FOR PRIMARY SCHOOLS

- A Guide for Teachers -

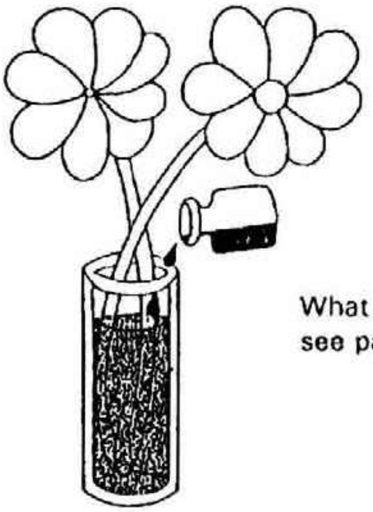

What happens?
see page 12

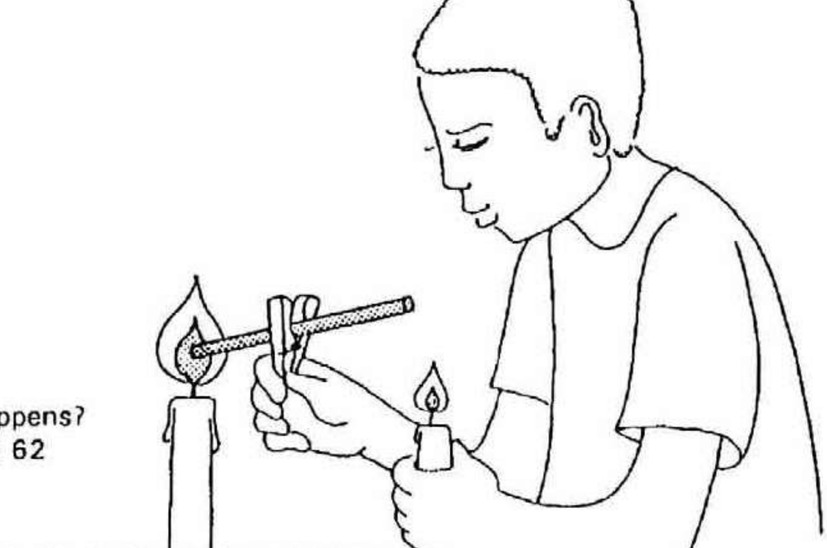

What happens?
see page 62

Published October 1992 by

Deutsche Gesellschaft für Technische Zusammenarbeit (GTZ) GmbH
Abteilung 411 - Education and Science Division
P.O. Box 51 80
D-6236 Eschborn
Federal Republic of Germany
Phone: (06196) 79-0 Telex: 41 523-0 gtz d Fax: (06196) 79-1115

Evaluation of curricula and project documents and compilation of the collection:

Renate Voßwinkel

Professional inputs:

Physics
Prof. Dr. Dieter Nachtigall, University of Dortmund

Biology
Dr. Gernot Strey, University of Göttingen

Illustrations
Dorsi Germann

Typeset & Layout
Fritzler & Fritzler Satz, Braunschweig

INTRODUCTION

In many countries, where natural science and technology are only now being called on to help solve the problems facing the land, educational planners and educationalists have to decide how to meet this challenge in science teaching at primary and secondary level. Conventional teaching media, which must generally be imported, are beyond the means of the already stretched education budgets and some teaching aids, that look to promising, do little more than confuse pupils, without helping to answer the questions.

Time, and a detailed knowledge of the regional problems will be needed in order to find a promising future solution for each country.

We would like to present one possible solution in the form of this collection of fundamental scientific experiments, requiring few, simple and readily available materials and inputs. Experience in many and varied projects, along with evaluations of the relevant curricula and of the schooling situation in various countries spurred us to take this step.

What has emerged is a collection, which we feel is in line with the level of previous methodical and didactic knowledge of the teaching staff, who are often inadequately trained for the tasks they are expected to perform. It provides the information needed for an interesting lesson and is meant to appeal the various intellectual faculties of children. To this end the experiments are described in simple, easy to understand language, and designed in the form of lesson blueprints.

Please let us know whether this collection lives up to its goal of providing practical assistance and as many ideas as possible in terms of materials, methods and experiments. We would be interested to hear from you which interests were awakened and what understanding pupils developed as a result of the individual experiments.

We would like to thank all those who contributed information, critical comments and ideas and, above all, the authors whose professional inputs have made this collection possible.

Hubert Hartmann
GTZ, Education and Science Division

TABLE OF CONTENTS

1. BOTANY

1.1. THE EXPANSION IN VOLUME OF SWELLING SEEDS

Main Goal:

This experiment illustrates in an impressive way how seeds expand in volume as they steep.

Information:

Seeds have a great osmotic pressure, which is responsible for water absorption during the steeping process. (Osmosis is the diffusion of fluids and gases through a membrane or porous partition.)

Materials and Apparatus:

bean or pea seeds
a. sand, water, a bottle, a pierced rubber or cork stopper, bucket;
b. gypsum, water, a small cardboard box, a vessel.

Procedure:

a. A bottle is completely filled with either bean or pea seeds and sand. The sand fills the spaces between the seeds. The bottle is tightly sealed with the pierced stopper. The stopper can be secured with wire gauze. The bottle is placed in a bucket filled to the rim with water. The bottle has to be totaly submerged.

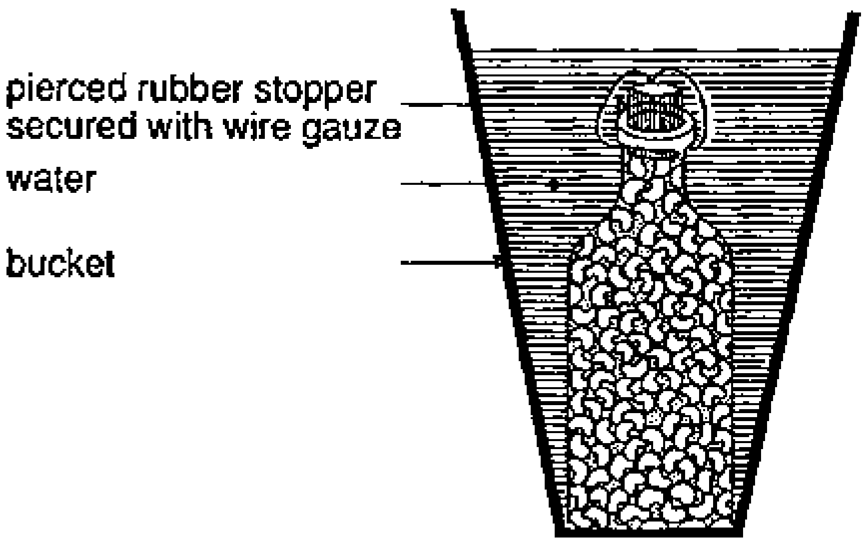

b. The small cardboard box is half filled with plaster of Paris. 15 seeds are placed in this and then the box is immediately completely filled with the plaster of Paris. The gypsum is left to firm completely and then the whole block is placed in water. Instead of a cardboard box you can use any other container, e.g. a plastic yoghurt tub.

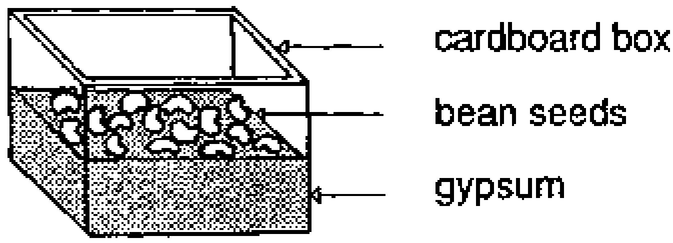

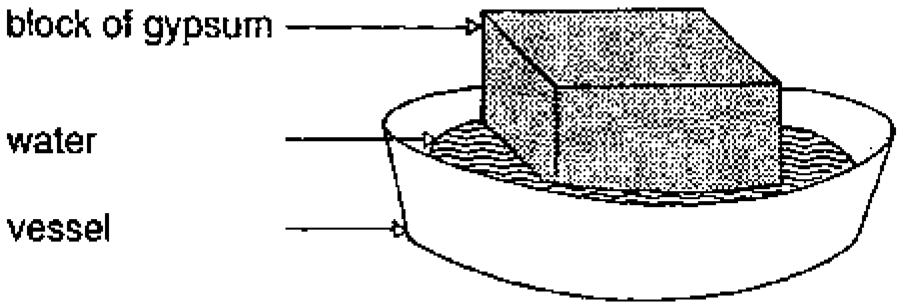

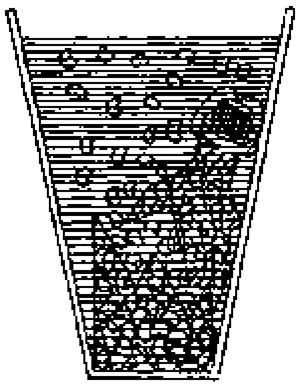

Observation:

After a few days the bottle and the plaster block shatter.

Analysis:

The seeds expand in volume to such a degree that the bottle and the block of gypsum shatter.

Importance in Nature:

Such power is necessary to push away the ground when the seeds swell in the soil. Otherweise they could not germinate, because they need the intake of water to make the stored nutrients in the seeds usuable.

1.2. THE TASK OF THE SEED LEAVES (COTYLEDONS) OF BEAN OR PEA SEEDLINGS

Main Goal:

This experiment illustrates that seed leaves (cotyledons) play an important role in the early development of seedlings.

Information:

The two seed leaves of beans (or peas) contain a certain amount of reserve substances. These nourish the seedling until it is able to absorb mineral salts from the soil through its fully developed roots and carbon dioxide from the air through their leaves.

Materials and Apparatus:

a. 9 seeds capable of germinating (peas) 9 seedlings of the same size 2 pieces of wire gauze or 9 test tubes or flint-pebbles to hold the plants (the size should be such that the seedlings do not fall through the mesh) 1 dish (measuring about 13 cm by 5 cm, and about 7 - 10 cm in height) distilled water (Available in every garage. If distilles water cannot be bought or produced, rain water or tap water may be used).

Procedure:

a. Put the beans on the wire gauze. Make sure that they are moistened regularly. Let them germinate. Watch the water. If it becomes grey change it, because there are fungi in the water which may start to destroy the experiment.

b. When the seedlings are about 1 cm hight, both seed leaves are taken from each of three seedlings and one seed leaf from three others. The roots must be kept below the surface of the water. The last three remain unchanged. The experiment is analysed after about a week.

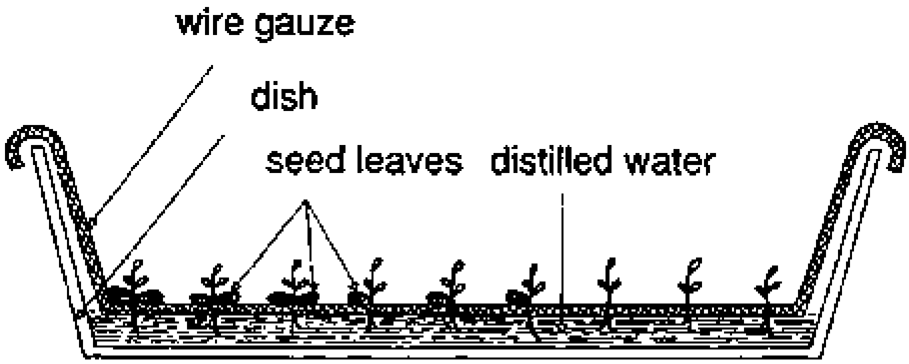

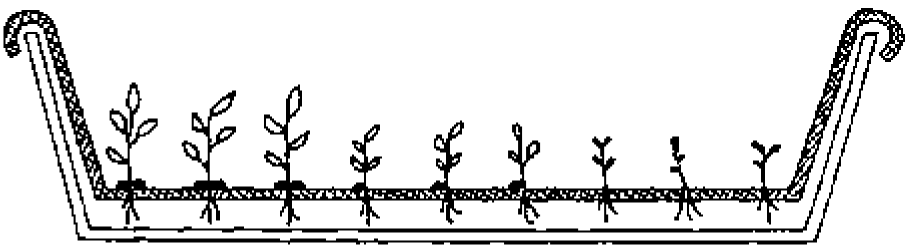

Observation:

The seedlings without any seed leaves have not grown.
Those with just one seed leaf have hardly grown.
The seedlings with two seed leaves have grown noticeably.
All of the seed leaves have withered.

Analysis:

The seed leaves nourish the seedlings until they are capable of absorbing mineral

salts through their roots.

Importance in Nature:

The nutrients the seed leaves use when germinating are the same as those we use when we eat beans, peas or other seeds. The reserve substances stored for the seeds themselves give us the feeling that we are full.

1.3. SEEDS DO NOT GERMINATE IN FRUITS

Main Goal:

This experiment illustrates the existence of materials which inhibit the germination of seeds in fruits.

Information:

In order to germinate, seeds need water as well as air. In most kinds of fruits, seeds do not germinate. One reason, besides the lack of air, is that there are substances in the fruits which prevent germination.

Materials and Apparatus:

different kinds of fruit (e.g. oranges, apples, melons, tomatoes)
40 cress seedlings
4 round filters, or absorbent paper, or cotton wool
5 round dishes, about 10 cm in diameter (e.g. lids of jam jars)
1 knife water

Procedure:

40 cress plants are soaked for about 10 minutes in one dish filled with water. (The swelling process takes longer if other fruit seeds are used, and some are not capable of germination.)

Meanwhile the moistened filters and the cut parts of the fruits are placed into the other dishes. Ensure that the equipment and your fingers are clean when you cut the fruits and place the parts into the dishes, otherwise you can get blue mould growing on your experiment. If blue mould should grow nevertheless repeat the experiment. The swelled cress seedlings are distributed among the four dishes as shown in the diagram below. They are observed for 4 - 5 days.

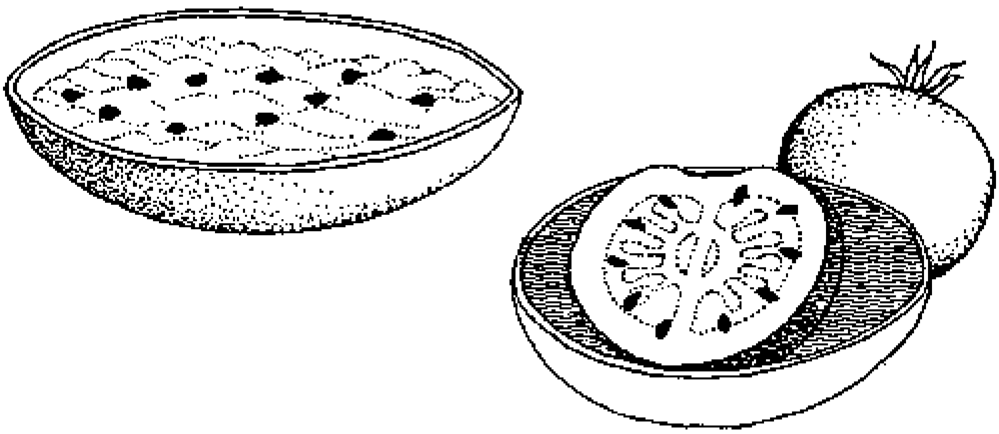

Observation:

Although the seeds in all the dishes receive air and water, germination takes place only in those dishes in which they were placed directly on moistened paper. (One or two germinated seeds on the fruit slices do not distort the result. Experiments in biology do not necessarily succeed completely.)

Analysis:

Fruits contain substances which inhibit the germination process. These prevent the germination of seeds. The seeds can only start germination and growing once the fruits are rotten.

Importance in Nature:

Fruit seeds are spread by birds, which are attracted by the coloured fruits. The birds eat them, and drop the seeds with their droppings. The seeds then germinate and grow where they land.

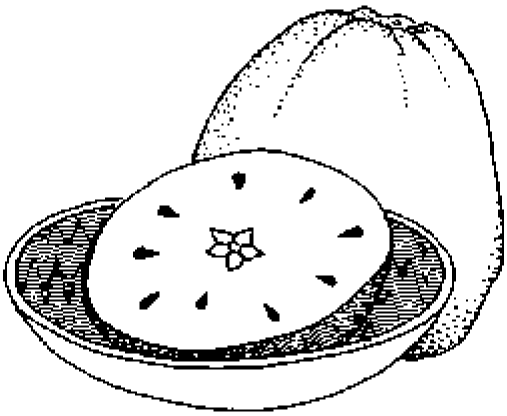

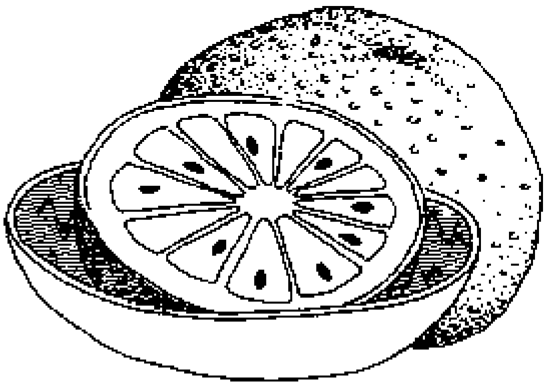

1.4. PLANTS DO NOT GROW WITHOUT LIGHT

Main Goal:

This experiment demonstrates that plants wither without light.

Information:

Plants require light to produce carbohydrates from carbon dioxide and water. (The carbohydrates are decomposed gradually by the metabolism of the plant. During this process, energy necessary for the vital functions of the plant is liberated.)

Materials and Apparatus:

cress plants (about 30)
2 flat receptacles filled with soil (e.g. cut-off tins or plastic mugs)
water
1 cardboard box

Procedure:

Cress plants are grown in the two receptacles in moist soil until they are approximately 1 cm high. A cardboard box is placed over one of the receptacles (see diagram). The soil is kept moist. (Other plant types may also be used.)

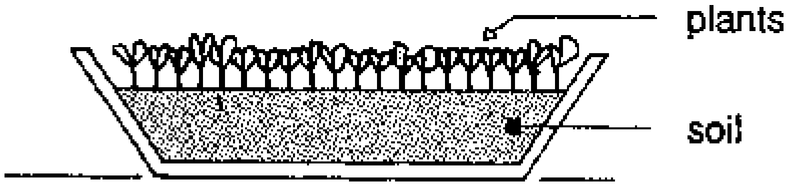

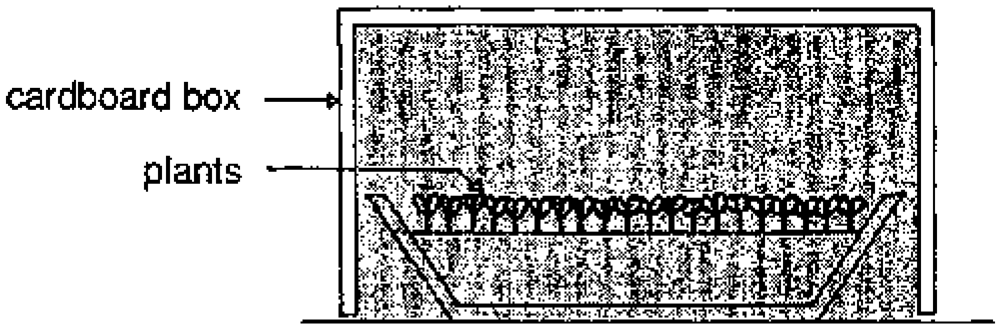

Observation:

After a few days it can be observed that the leaves of the plants under the cardboard box have turned yellow. The plants do not grow further.

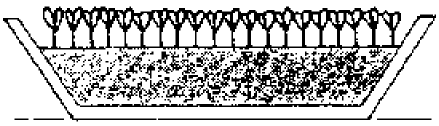

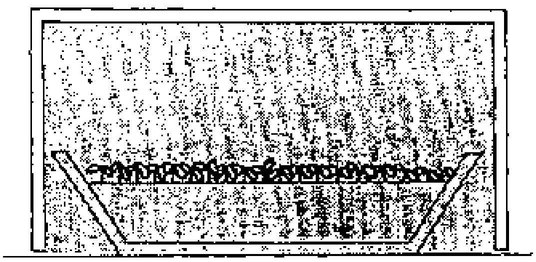

Analysis:

> **Besides water and the mineral salts which are found in the soil and carbon dioxide from the air, plants need light to grow.**

1.5. PLANTS GROW TOWARDS THE LIGHT

Main Goal:

> **This experiment demonstrates that plant shoots usually grow towards the light.**

Information:

> As a rule, shoots grow towards the light. Light is indispensable for photosynthesis of plants.

Materials and Apparatus:

> *about 20 cress seedlings in soil (mustard seedlings or other kinds of plants can also be used)*
>
> *cardboard box*
>
> *a pair of scissors or a knife*

Procedure:

> A hole measuring some 2 cm^2 is cut in one side of the cardboard box. The hole should be cut at the height of the cress seedlings. This cardboard box is placed over the seedlings. The experiment should be placed beside a window with the hole facing the window.

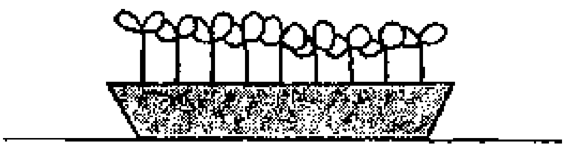

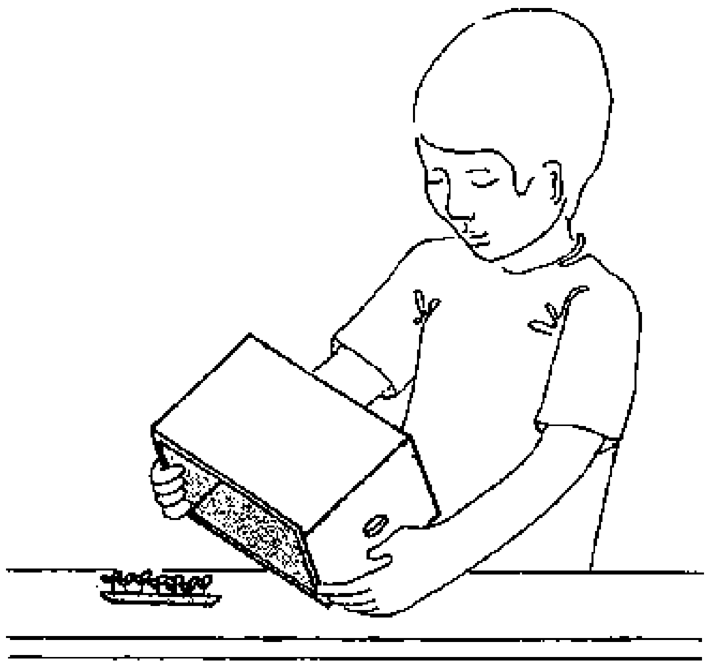

Observation:

After a few days it is observed that the axes of the seedlings bend towards the light source.

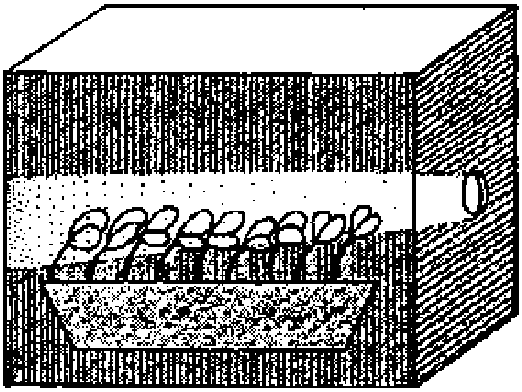

Analysis:

This bending towards the rays of light is known as **“phototropism”.**

Importance in Nature:

Phototropism helps the plant to get as much light as possible for a maximum photosynthesis. But in nature this involves certain problems: maximum photosynthesis means a maximum of transpiration. High rates of light deminish the growth in length, which can become a problem in competition with other plants. Everywhere in nature we thus see an optimal compromise.

1.6. PLANTS TRANSPORT WATER

Main Goal:

This experiment shows that plants transport water. There are ony few flowers which are suitable for this experiment.

Information:

Plants contain vascular tissue. The xylem (woody tissue of a plant) conducts moisture and mineral salts. The phloem (sieve-tube tissue) serves as a path for the distribution of synthesized food.

Materials and: Apparatus:

white or yellow flowers like sowbread, snowdrop, white lilies, impatiens and other flowers with somewhat hyaline stalks and petals. You can also use small twigs of deciduous trees with very young leaves. It may be necessary to test some plants available in the country where the experiment will be carried out.
water-soluble 1% red or blue colouring
(red or blue ink, acid solution)
1 glass or plastik beaker, approximately 15 cm in height
(depending on the length of the plant stalks)
water
knife

Procedure:

Some flower stalks are cut obliquely under water and placed in the dish with the colouring solution. The stalks must be cut under water to prevent the appearence of an embolus of air in the lower part of the stalk. That would prevent the coloured water rising in the stalk.

This experiment takes between 30 and 60 minutes, sometimes half a day, depending on the kinds of plant used.

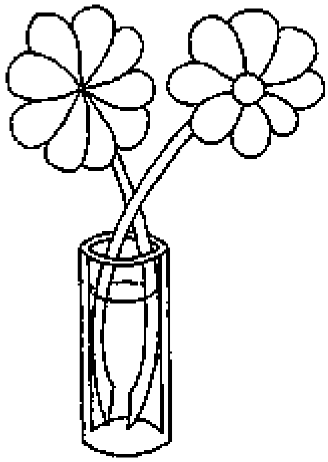

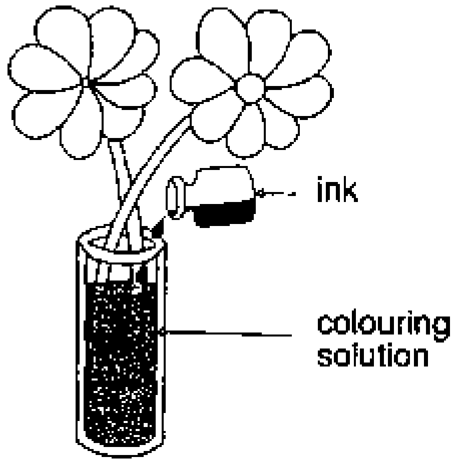

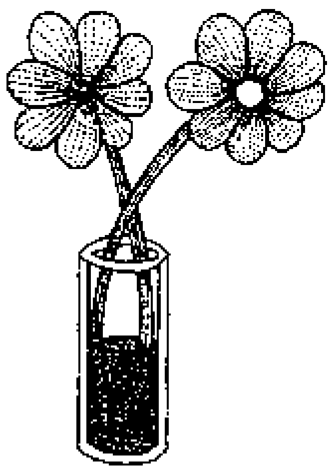

Observation:

The colouring solution can soon be seen in all parts of the plant. The way it moves up the stem can be clearly observed.

Analysis:

Water is conducted into each part of the plant by the **plant's vascular tissue. Thus, a permanent water supply is guaranteed.**

Importance in Nature:

The water has to got somewhere. Otherwise the plant would be fully saturated, no more water could rise and there would be no more intake of nutrients from the soil. Here once again we se optimal compromise.

The next experiment looks in more detail at water loss.

1.7. THE WATER EVAPORATION OF PLANTS

Main Goal:

This experiment illustrates that plants release water via their leaves.

Information:

Roots absorb water, which is conducted by the vascular tissue to all parts of the plant. The water evaporates via the leaves, so that a constant flow of water is guaranteed.

Materials and Apparatus:

1 thin (young) branch of a deciduous tree

water

oil (plant oil as used for cooking will be best. Do not use motoroil at all. It will damage the leaves by releasing poisonous gases).

1 glass or plastic beaker (about 10 cm in height)

1 glass only (about 20 - 25 cm in height)

Procedure:

The branch is cut obliquely under water and then placed in the smaller glass or beaker which is filled 2/3 full with water. The stalks must be cut under water to prevent the appearence of an embolus of air in the lower part of the stalk. That would prevent the water rising in the stalk. Then oil is carefully poured into the glass to form a 0.5 cm layer on top of the water.

The larger glass is placed upside down over the apparatus. Place the experiment in cool surroundings This is the only way in which you can see the outcome because the evaporated water will only condense on the walls of the glass if the glass is cool.

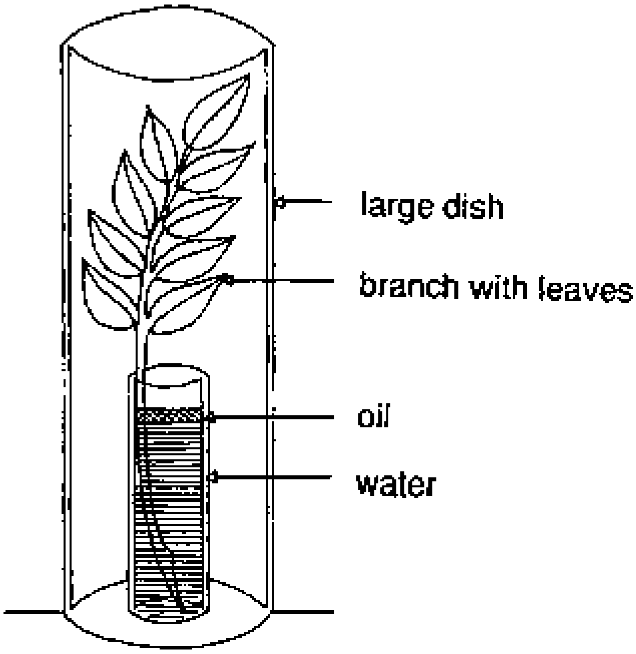

Observation:

Moisture condenses after some time on the inside of the larger glass. The condensed water will firstly form a layer on the wall of the glass and will later flow together to form drops of water.

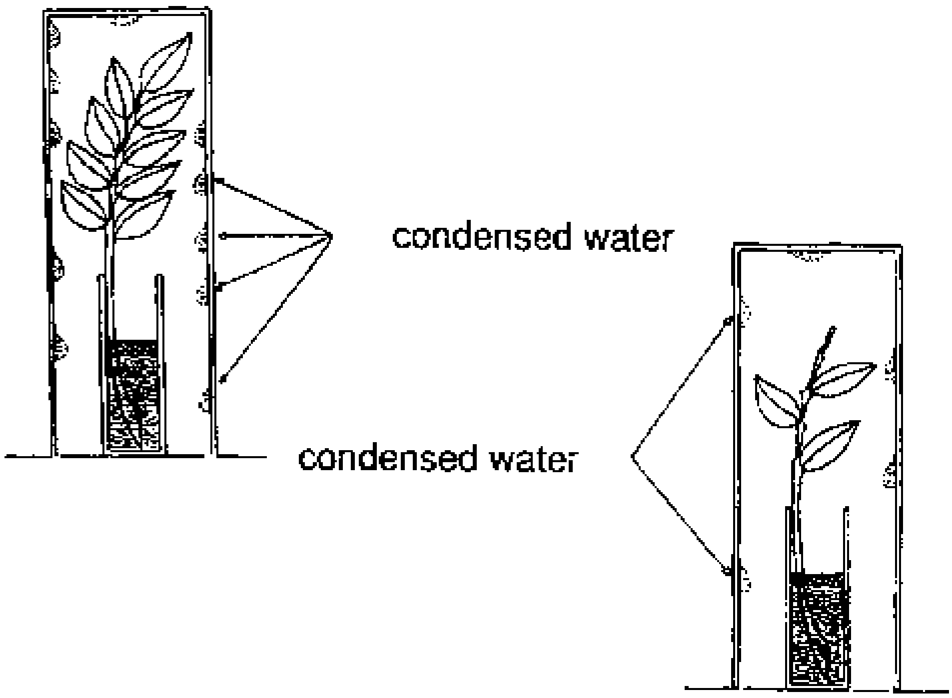

Analysis:

The condensation is water, which can only have evaporated via the leaves.

This process is known as transpiration.

The moisture evaporates through tiny holes on the underside of the leaves.

As the number of leaves increases, so too does the transpiration via the leaves.

Addition:

The water can be identified with dried white copper sulfate, which turns blue.
(see experiment: THE COMBUSTION PRODUCTS OF A FLAME.)

Practical Meaning:

There are different devices which prevent a plant drying out.

The plant protects itself by:

- thick leaves covered with a layer of wax;
- thick shoots with a tissue that can store water;
- bark formation;
- closing the stomata in the leaves in certain circumstances;
- growing dry hair on the lower surface of the leaves.

1.8. THE IMPORTANCE OF MINERAL SALTS

Main Goal:

This experiment shows that plants cannot live without mineral salts.

Information:

The seedlings obtain proteins, fats, carbohydrates, the nutrients necessary for their growth from the seed leaves.

To retain their vital functions, plants synthesize the nutrients in various metabolic processes. In order to do this, mineral salts and water are indispensable.

Terrestrial plants absorb the mineral salts, which are dissolved in the soil, through their roots.

Materials and Apparatus:

20 beans plants or other plants

2 glass or plastic vessels

2 pieces of wire gauze (or 8 test tubes with flint pebbles to hold the plants)

tap water

distilled water

1 bucket loamy soil

Procedure:

Put a small shovel of soil into the bucket and add a large amount of water, so that you can stir the soil. Then fill the two dishes with the water obtained from the soil. This water contains nutrients from the soil. Put the gauze onto the dishes and ten beans on each of them. Make sure that the beans are regularly moistened. Watch the experiment to prevent funghi starting to grow. When the beans are about 5 cm high, replace the soily water from one of the dishes and replace it with distilled water. Rinse off the roots of those ten beans thoroughly but very carefully, **without removing them from the gauze.** Then put those beans into the vessel with distilles water.

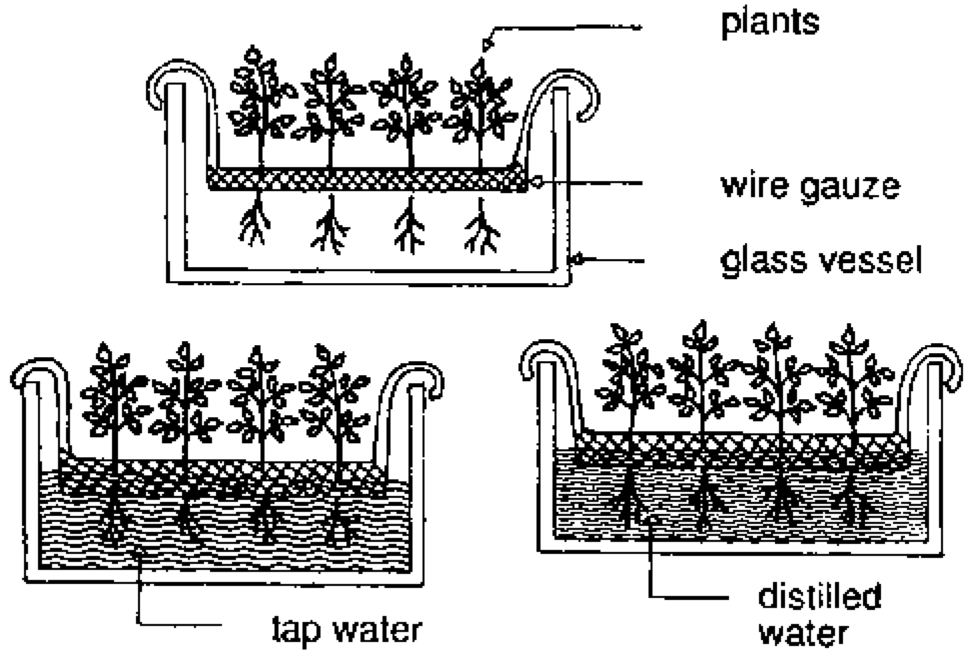

Observation:

After a few days it can be observed that the plants in the distilled water develop poorly.

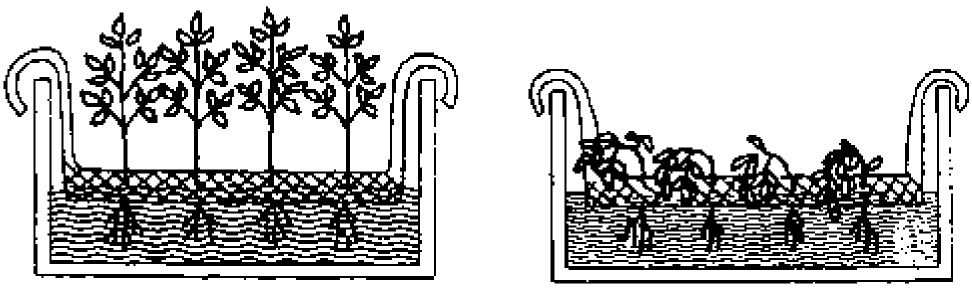

Analysis:

Distilled water does not contain mineral salts. Like soil, normal water contains mineral salts. These are necessary for the vital functions of the plants.

1.9. PLANTS PRODUCE OXYGEN

Main Goal:

This experiment demonstrates that a gas, oxygen, is produced during photosynthesis.

Information:

In their green leaves, with the help of sunlight, plants produce glucose and oxygen from carbon dioxide and water. This process is called "photosynthesis".

Materials and Apparatus:

In different countries there may be other plants which are suitable for this experiment, waterweed (elodea)

glass vessel

funnel with a short or shortenes neck (see figures)

rubber stopper

a wood chip

matches

Procedure:

Bind about 15 stems of waterweed together with a piece of thin wire or a thread. Place them in a vessel which is filled with water almost up to the rim. The cut parts of the waterweed must point upwards. Put the funnel over the waterweed. Make sure that the top of the funnel neck is under water. (See figure) Then fill the test tube up to the rim with water. Seal it with your thumb. Turn it over and place it, still sealed with your thumb, into the water in the vessel. Place the tube over the funnel neck without pulling the tube out of the water. This is the only way, of placing the tube over the funnel neck, while retaining the water in the tube. - When the tube is nearly full of gas produced by the waterweed, take a glowing wood chip, remove the testtube from the funnel neck, turn it up and place the glowing wood chip into the tube.

Observe what happens.

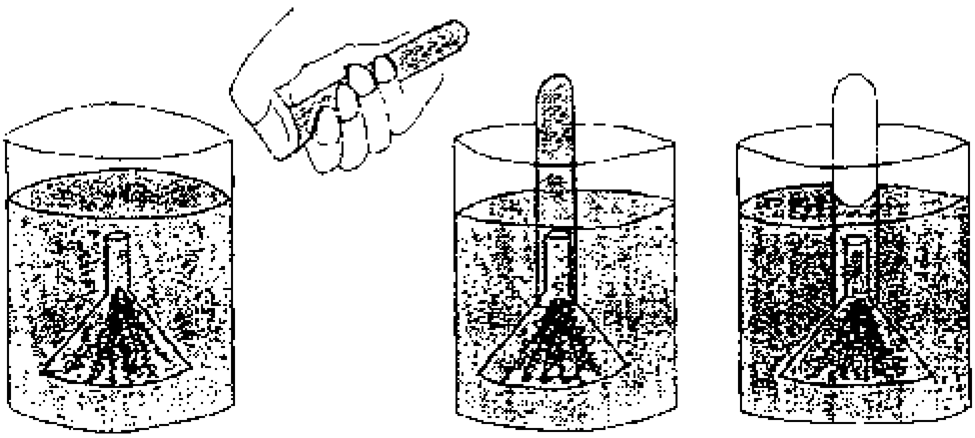

Observation:

Gradually the water in the tube is replaced by gas. The glowing chip lights up.

Analysis:

The gas produced by the waterweed could be oxygene or methane. You can exclude methane since, although it is a gas left by anaerobic bacteria in rotting organic

matter, it is poisonous to plants.

Importance in Nature:

Human beings and animals need oxygen to breathe. That is: We depend on plants producing oxygen, as do all animals. Therefore it is necessary to protect plants and the areas where they grow.
See experiments botany 1.12 und human biology 2.10.

1.10. STARCH FORMATION IN LEAVES

Main Goal:

This experiment serves to identify a product resulting from photosynthesis, namely starch.

Information:

Starch is one of the most important reserve substances of green plants. It is found as assimilation starch in the chloroplasts of green leaves.

Materials and Apparatus:

a. plants with relatively large leaves
paper
pair of scissors
needles

b. 3 dishes
water
alcohol (96%)
iodine solution
(iodine-potassium iodide solution 1%)

Procedure:

a. As shown in the diagram below, the leaves are covered with patterns. The plant stays like this for one day and one night. The experiment to detect starch can be carried out after the plant has been sunlit for at least three hours the next morning.

b. The leaves are cut off the plant and the patterns are removed. **Before heating the water put the alcohol aside so that it cannot be inflamed.** Boil the leaves for about five to ten minutes (depending on the hardness of the tissues of the leaves used).

After extinguishing the burner the leaves are dipped into the alcohol until the chlorophyll is almost extracted. This should take about five minutes. Then place the leaves upside down on a plate and drop up to five drops of the iodine solution onto each leave. Rub the solution into the tissue of the leaves with the tip of a small stick. Leave the experiment for about one or two minutes. Then rinse the leave.

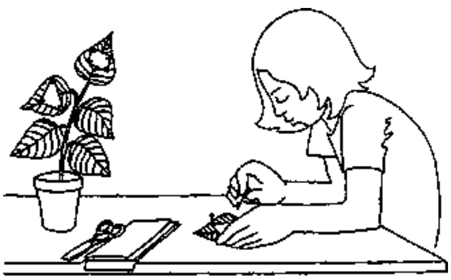

Observation:

Where starch is present the iodine will turn to a bluish brown or a deep dark brown. Parts without starch will become only a little bit yellow brown.

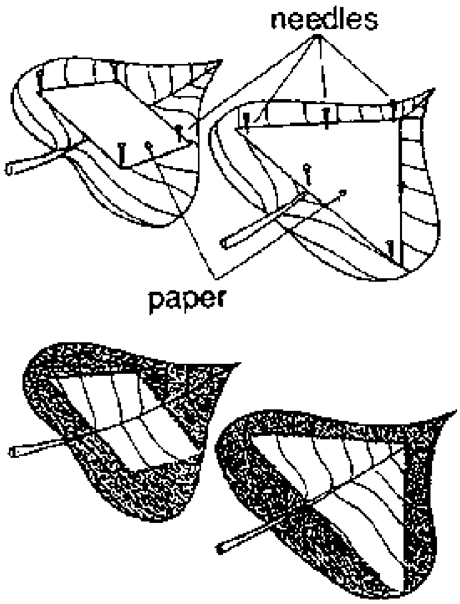

Analysis:

Iodine colours starch bluish brown or deep dark brown.

For the starch formation, chlorophyll and light are indispensable.

Addition:

Starch is the typical vegetable reserve carbohydrate, e.g. of grain.

Potatoes have a high starch content. When iodine-potassium iodide solution is dropped onto a cut potato, the surface turns a black-blue colour immediately.

(The blue-black colouring results from an inclusion of iodine molecules into the twisted arrangement of the starch molecules.)

1.11. THE PRODUCTION OF GASES BY PLANTS UNDER DIFFERENT CONDITIONS

Main Goal:

This experiment demonstrates that the amount of gas produced by plants depends on the amount of carbon dioxide available.

Information:

Plants transform the carbon dioxide from the air or water with water and energy from sunlight into sugar and starch. During this procedure so much oxygene is produced that the plant cannot use it all. This surplus of oxygen escapes from the plant.

Materials and Apparatus:

a glass vessel, e.g. a jam jar
boiled water which has been left to cool down
soda water
waterweed (other plants have to be tested)
one watch to count minutes

Procedure:

Fill the vessel up to one cm below the rim with tap water. Place a piece of waterweed into the water. Wait one minute. Watch and count the bubbles rising from the stem for exactly one minute. The bubbles are best if they large and discharged at a rate of not more than about ten a minute. Then change the water and place the waterweed into the boiled cooled water. Observe whether the plant continues to produce gas bubbles. After a few minutes pour some soda water into the vessel. Wait a minute and observe the plant. If it starts producing gas again, wait two minutes and then count the bubbles once more for exactly one minute. Compare the results obtained.

Observation:

In the first case you will note a few bubbles, in the second case there will be no bubbles, and in the third case you will see more bubbles of gas than in the first case.

Analysis:

Tap water contains a little carbon dioxid, enough for the waterweed to produce sugar and then a surplus of oxygen. In boiled water there is no carbon dioxide and the plant cannot act. The plant is not dead, however as we can see from the fact that it produces a lot of bubbles after adding soda water, which contains a large quantity of carbon dioxide.

Importance in Nature:

With this experiment, botany 1.10 and human biology 2.10 you can explain by yourself the circle of oxygen and carbon dioxide in nature and how animals and human beings depend on plants and vice versa.

1.12. THE TRANSPIRATION OF PLANTS

Main Goal:

This experiment shows that a large account of water evaporates through plant leaves (more than evaporates from an open surface of water).

Information:

Plants transpirate through their leaves.

On the lower side of the leaf there are many small pores, stomata, through which the steam excapes. Only one percent of the surface of the leaf is covered with those stomata, but more water escapes there than from a surface of water as large as the whole surface of a leaf.

Materials and Apparatus:

a big beaker (about a litre), e.g.
a preserving jar a dish measuring about 20 cm in diameter, e.g. a plate
a platform balance with several weights
a bunch of twigs with leaves

Procedure:

Put the bunch of twigs into the beaker and fill it up with water. Fill the dish with water too. Put them on the scales so that they balance.

Leave the experiment for about 30 minutes. Then compare the levels of the plantforms.

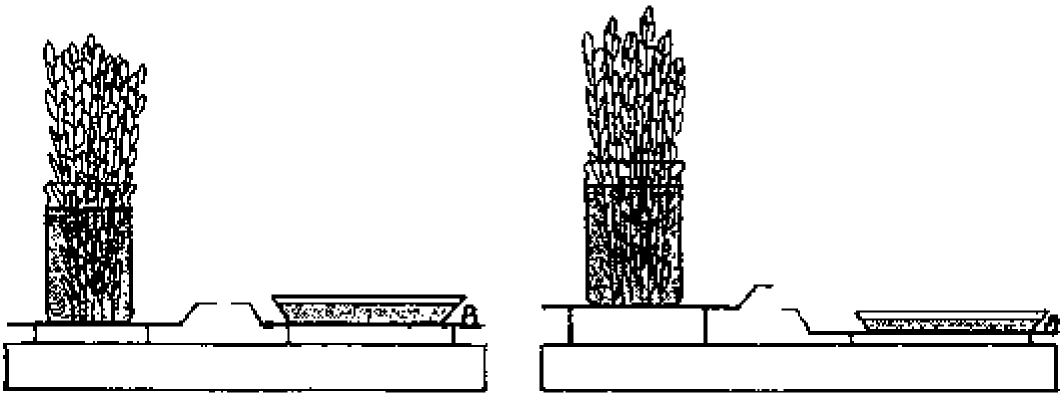

Observation:

The platform with the twigs in the beaker will go up, the other one naturally down.

Analysis:

More water has evaporated through the leaves of the bunch of twigs than via the surface of the water in the dish.

Importance in Nature:

Only a little area of the lower surface of the leave is needed to release enough water to enable them to take as many minerals from the soil as necessary. The leaf remains stable in this way. There are only small parts where germs can get into the plant. There is another example of optimal compromises in nature.

1.13. GERMINATING PLANTS IN DIFFERENT CONDITIONS

Main Goal:

This experiment shows that seeds, in this case pea seeds, need air to germinate.

Information:

see analysis.

Materials and Apparatus:

ten pea seeds (other seeds have to be tested)
two dishes with a rim high enough to cover the pea seeds with water
cotton wool or some other such substance to keep the pea seeds moistened

Procedure:

Put the cotton wool in one of the dishes and place five pea seeds on it. The other five seeds are placed in the other dish. Fill the first dish with water so that the seeds are just covered. Keep only the cotton wool wet after the seeds have soaked up the water.

Fill the second one up to the rim and keep the water at this level.

Watch the dishes and change water if it becomes grey.

Than there are funghy which will start to destroy the experiment.

Observation:

After 24 hours the seeds are swollen.

After another 24 hours the pea seeds on the cotton wool have germinated, while the seeds under water have not germinated or not to any great extent.

Analysis:

Though there is some oxygen soluted in tap water it is not enough to let seeds germinate. Plants can use their nutrients stored in the seed leaves only if there is enough oxygen available to decompose the starch into sugar.

Addition:

Now you know why the earth has to be loose and wet, when you sow seeds in the garden.

2. HUMAN BIOLOGY

2.1. HEAT RADIATION OF THE HUMAN BODY

Main Goal:

This experiment demonstrates that the human body, like all other substances, emits heat to a colder surrounding.

Information:

The average body temperature of a healthy human being is 37° C. This temperature is maintained by the various metabolic processes (see experiment “HEAT RADIATION”).

Materials and Apparatus:

1 thermometer, if possible filled with alcohol rather than mercury

Procedure:

a. With the thermometer, the body temperature is measured under the armpits.

b. Fix the thermometer in a stand (e.g. a small branch in a pot with sand). Put one hand round the lower tip of the thermometer, close to it, but without touching the tip.

Wait about one or two minutes and note what happens.

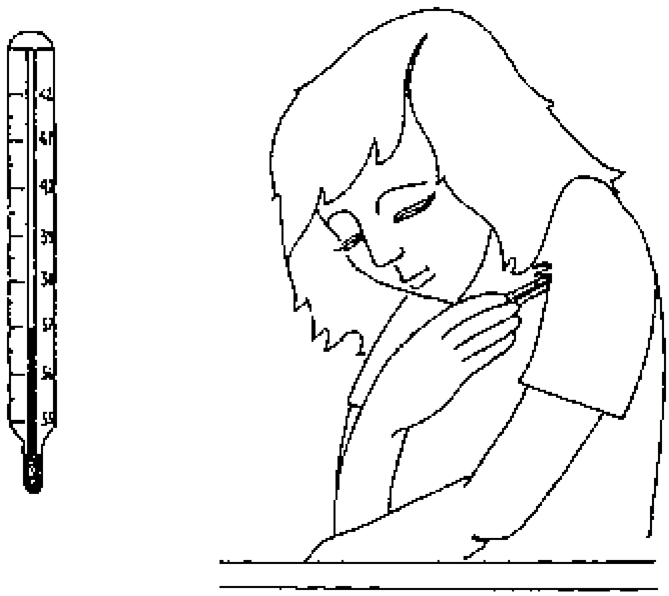

Observation:

a. The thermometer indicates about 37° C.

b. The thermometer ascends for two to five degrees, depending on the surrounding temperature.

Analysis:

> **The average body temperature of a human being is 37° C.**
> **The body emits heat to a colder surrounding, e.g., the air.**

Practical Use:

> Human beings choose their clothing according to the outside temperature. To keep the heat radiation of the body at a low level, the Eskimos in Greenland wear thick furs. In southern warm countries, thin and often lightly coloured clothing is worn. It reflects the radiation of the sun better than dark clothing.

2.2. SENSATION OF WARMTH AND COLD

Main Goal:

> **This experiment illustrates that the sense of temperature cannot register temperature in** an **absolute way.**

Information:

> Covering the skin of a human being are about 250 000 receptors to perceive cold and 30 000 to perceive heat. Temperatures which are too high or too low cause a feeling of pain.

Materials and Apparatus:

> *1 thermometer*
> *three litres of water one each at a temperature of 5° C,*
> *20° C and 40° C 3 flat dishes*

Procedure:

> One litre of water is cooled down, in a refrigerator, with ice or by placing it outside at night.
>
> Another litre is heated to about 40° C, and the last litre to about 20° C.
>
> The experiment is set up as shown in the diagram below.

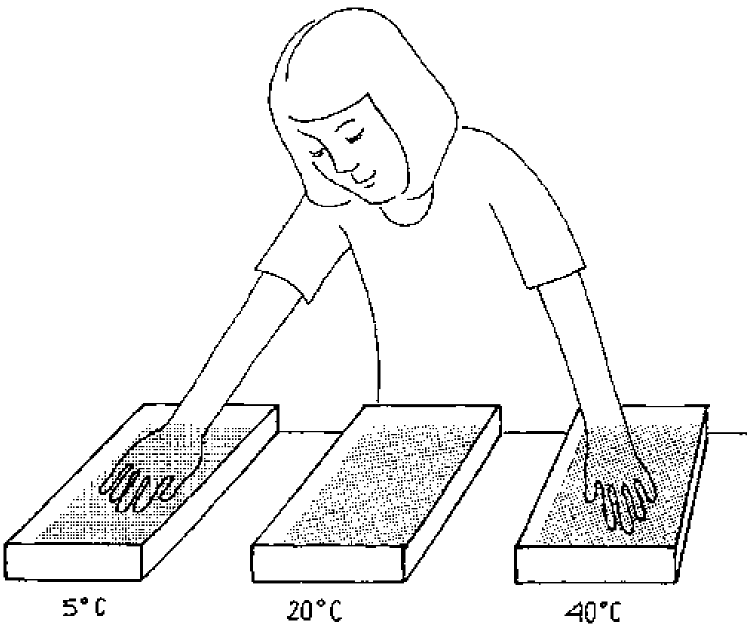

One test person places his left hand into the left-hand dish and the right hand into the right-hand dish. After 5 minutes, both hands are placed simultaneously into the middle dish.

Observation:

The left hand perceives the water in the middle dish to be relatively warm and the right hand perceives it to be relatively cold. After some time the water is perceived as being the same temperature by both hands

Analysis:

Temperatures are perceived with the sense of temperature.

The sense of temperature needs some time to adapt to sudden variations in temperature.

Thus it is only reliable up to a certain point.

Addition:

Non-heated rooms such as a cellar, are perceived to be cool in summer and warm in winter, although the temperature is higher in summer than in winter.

2.3. THE TASTE BUDS ON THE TONGUE

Main Goal:

This experiment shows that the tongue is divided into various areas which perceive different kinds of tastes.

Information:

On the surface of the tongue are taste bud areas which are capable of distinguishing between sweet, sour, salty and bitter. These areas can be easily located.

Materials and Apparatus:

sugar

sodium chloride - household salt

1 lemon

magnesium sulphate or one bitter grapefruit

4 cotton buds or wooden spatula
4 flat glass receptacles
1 cloth

Procedure:

Watery solutions of each of the above-mentioned substances and fruits should be prepared. A test person is blindfolded.

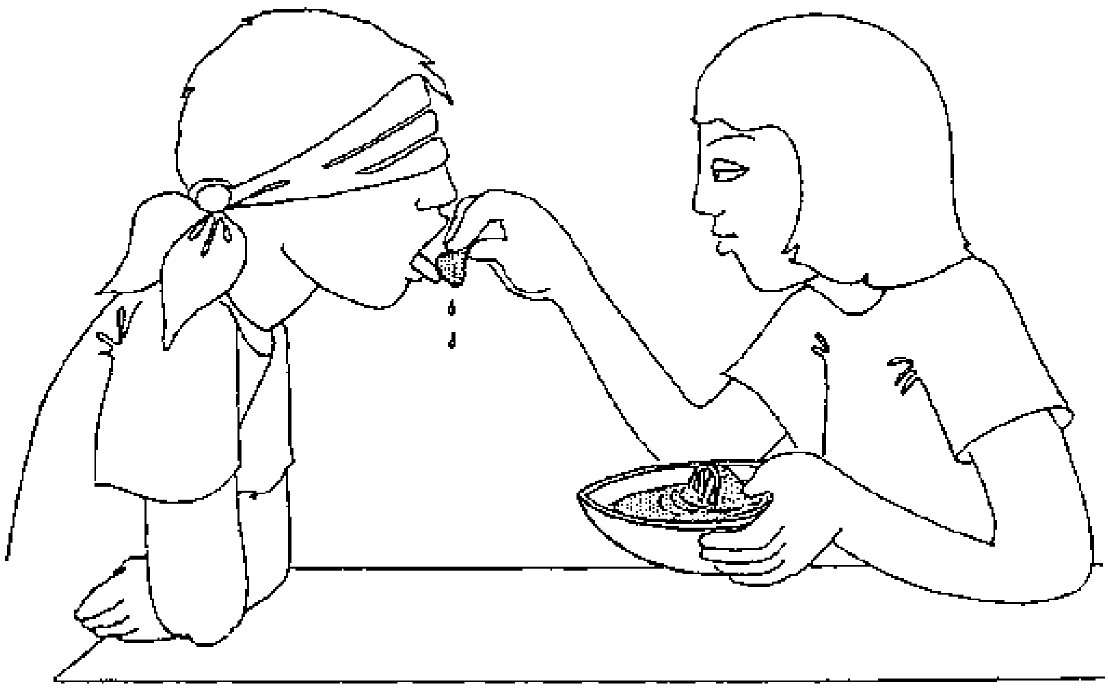

The solutions are placed on his/her tongue with the cotton buds. The test person states on which part of the tongue he tastes the solutions. The test person must rinse out his/her mouth with water between tests.

Observation:

Sweet tastes are perceived on the tip of the tongue.

The front edges of the tongue perceive salty substances.

The rear tongue edges perceive sour substances, and bitter ones are tasted in the retrolingual region.

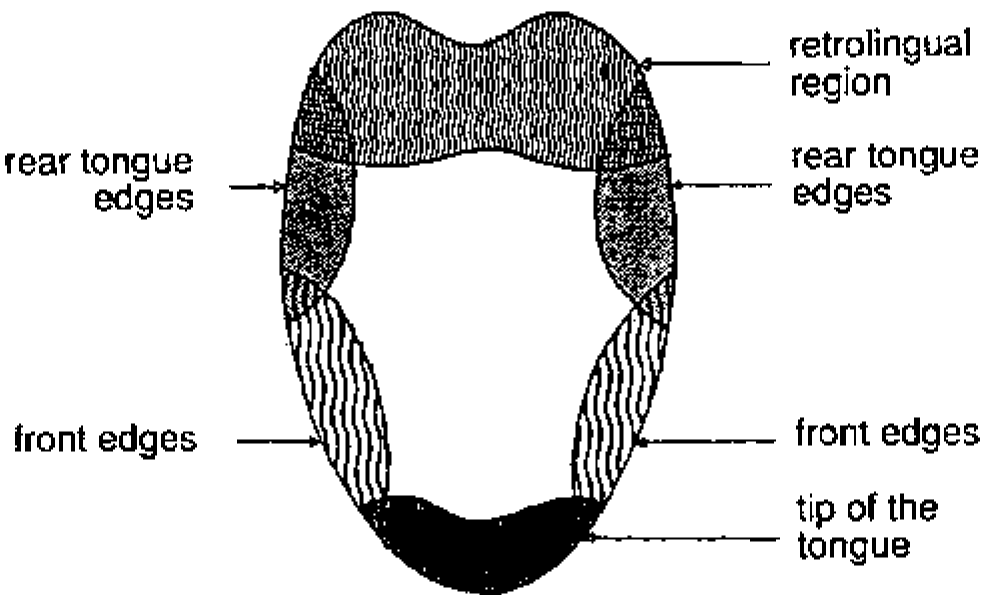

Analysis:

The taste bud areas are shown above in the form of a diagram.
The four different kinds of taste can be perceived <u>best</u> in the above areas.
The tastes overlap at the extremities of each zone.

Addition:

The knowledge of the places where you perceive the four different tastes is of no use at first, for you will seldom taste only one of the four tastes, when you eat anything. But if you think about your taste of **a** meal, you can imagine what happens in your mind with all the single tastes, componed in a very tasteful meal: Your tongue distinguish only four different tastes, in your mind find hundreds of different tastes, all composed by only the four, plus the taste "hot".

2.4. THE SENSATION OF TASTE AND SMELL

Main Goal:

This experiment demonstrates the interaction of the senses of smell and taste.

Information:

Four different areas of taste are located on the tongue:

sweet, salty, sour, bitter.

However, feelings of taste are created by an interaction of the sense of taste with the sense of smell. The latter is located on the mucous membrane of the nose. Besides this, the sensation of taste is affected by the sensations of warmth, cold, pain and touch.

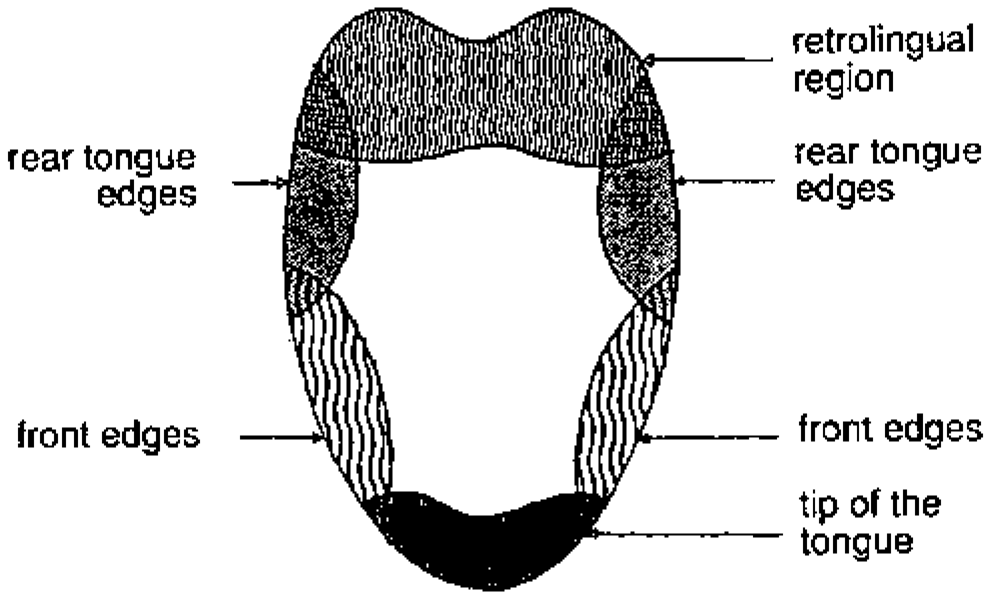

Materials and Apparatus:

1 apple
1 potato
1 onion

3 spoons
1 grater
3 dishes
1 cloth

Procedure:

The fruit and vegetables are grated and placed on the dishes.

One test person is blindfolded.

Using the spoons, the grated apple, potato and onion are put onto the tongue of the test person one after the other. After each test the test person rinses his/her mouth with water. The test person identifies the taste.

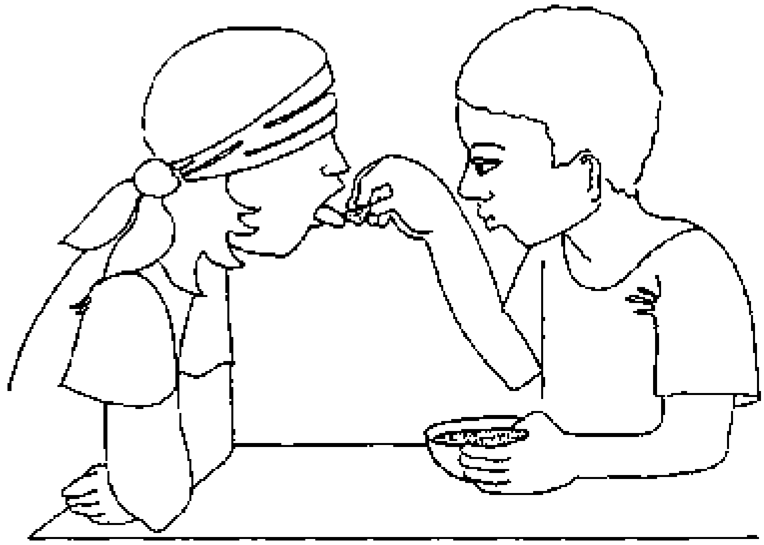

The second test is performed in the same way, but this time the test person holds his/her nose.

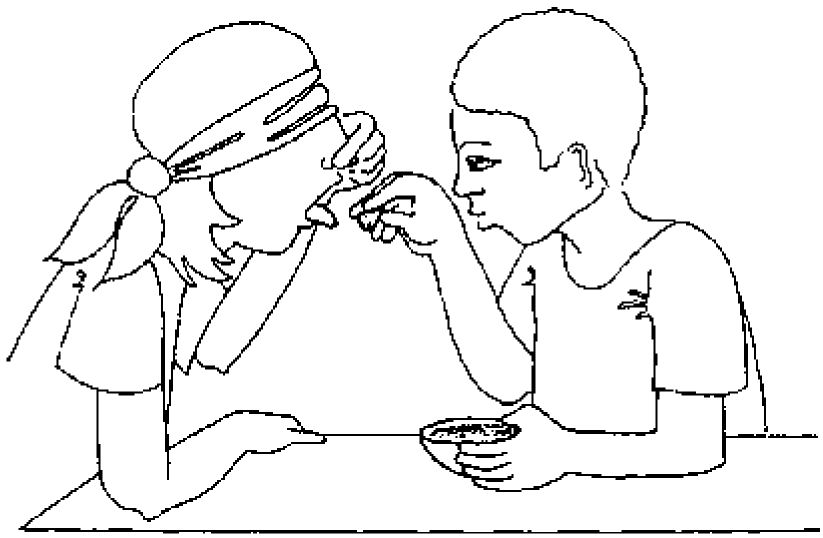

Observation:

When the test person holds his/her nose, the sensation of taste is significantly weaker.

Analysis:

There is an interaction between the sensations of **taste and smell.**

Addition:

It is well-known that to a person with a bad cold, food “has no taste”. Refer back to experiment 2.3 and complete your knowledge of tasting a meal.

2.5. STARCH BREAKDOWN IN THE MOUTH

Main Goal:

This experiment illustrates that starch breakdown starts in the mouth.

Information:

In the mouth, food is chewed into small pieces and moistened with saliva. The saliva is formed in the salivary glands, two sublingual, two lower jaw, and two parotid glands.

Saliva consists of mucus and the enzyme “ptyalin”. This enzyme causes the catabolism of starch into maltose. This catabolism continues in the stomach until the enzyme is made ineffective by hydrochloric acid, which is found in the stomach.

Materials:

a few cubes of bread
a few tubes
iodine-potassium iodide solution 1%

Procedure:

Put one cube of bread into a tube. Then drop so much of your saliva into the tube that the cube of bread becomes wet through. Drop about three drops of the iodine solution onto the cube. It turns dark blue. Keep the tube warm by closing your hand around the tube. Look periodically at the colour in the tube.

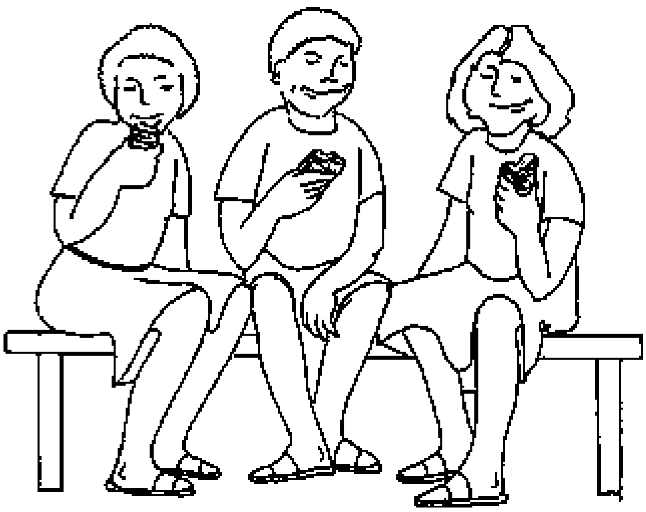

Observation:

After several minutes the colour changes from dark blue to light brown.

Analysis:

The enzyme ptyalin has catabolized the starch to sugar. Sugar cannot be tested with iodine solution. Therefore the blue colour disappears. This proves that the digestion of food starts in the mouth.

2.6. THE CINEMA EFFECT

Main Goal:

An expressive demonstration of the imperfections of the human eye.

Information:

The human eye does not register individual stimuli which hit the retina within less than an eighteenth of a second. One uniform impression is created.

Materials and Apparatus:

one cardboard disk, about 5 cm in diameter
a piece of string
coloured pencils

Procedure:

On one side of the cardboard disk a bird is painted and on the other side an upside-down cage.

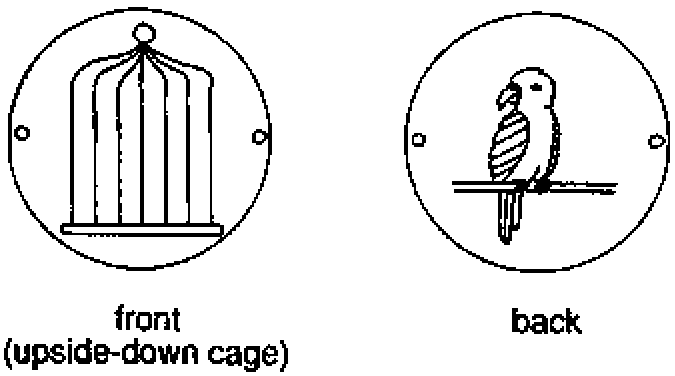

The string is cut into two pieces. Each of them is made into a noose. The nooses are attached to the opposite edges of the disk exactly in the middle of the drawing. (See diagram below.)

The free ends of the strings bands are firmly held, and then the disk is turned until the two strings are completely twisted. Then pull the ends of the strings in opposite directions. (If you pull too strongly you may tear the strings out of the holes in the cardboard.) The disk rotates rapidly and should be allowed to twist the strings in the other direction by loosing the pull on the strings. Then pull again and so on.

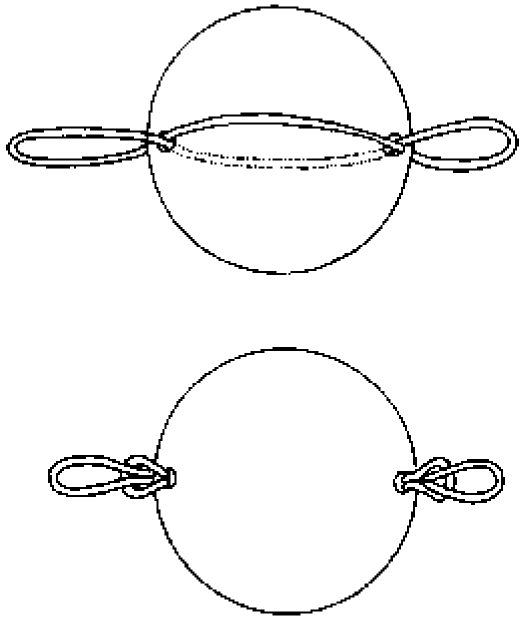

fastening of the strings

Observation:

Initially, the disk turns so quickly that the bird seems to be sitting in the cage.

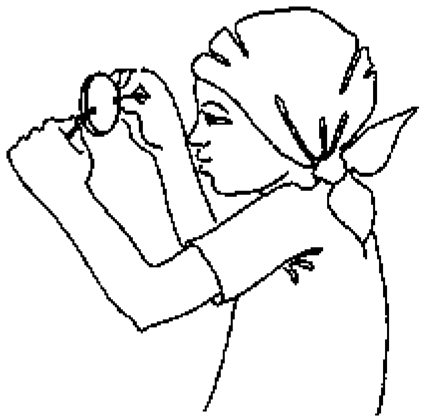

Analysis:

The rapid sequence of images cannot be separated by the eye into single images. The sluggishness of the eye is responsible for this “cinema effect”, which is the melting together of single images into one **animated image. This effect can be produced at a spead of 18 pictures a second. Most films in the cineama and the television work with 24 or 25 pictures a second to avoid any flicker.**

2.7. THE BLIND SPOT

Main Goal:

An experimental demonstration of the blind spot.

Information:

Rods and cones cells which are sensitive to light, are parts of the retina.

Nerve fibers conduct stimuli to the optic nerve and then to the visual centre of the cerebral cortex.

Where the optic nerve emerges, there are no rods and cones, so that an image cannot be created. This spot is called the “blind spot”.

The brain completes the missing part of the image from its surrounding. Thus there is no “hole” in the field of vision.

Materials and Apparatus:

light cardboard, measuring about 10 cm × 3 cm
scissors
coloured pencil

Procedure:

The cardboard is prepared as shown in the following diagram. (Other symbols can also be used.)

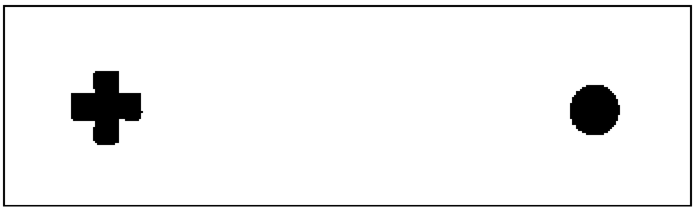

The cardboard is held at arm’s length in front of the right eye, and the left eye shut. The right eye focusses on the cross, and then the cardboard is slowly moved towards the eye.

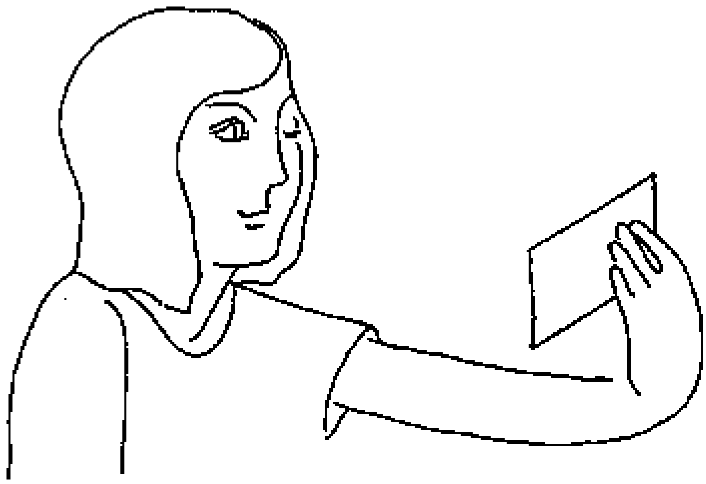

Observation:

The circle “disappears”, when the cardboard is a certain distance from the eye.

Analysis:

Light stimuli, which hit the optic nerve, are not transformed into an image. The spot where the optic nerve emerges is called the "blind spot".

2.8. A MODEL DEMONSTRATING THE FLEXIBILITY OF THE SPINE

Main Goal:

This experiment illustrates the flexibility and the stability of the spine.

Information:

The spine of a human being is shaped like a double "S". The spine of a baby or an ape is shaped like a single "S".

Materials and Apparatus:

2 solid pieces of wire about 50 cm long

a wooden board measuring about 10 cm × 20 cm different weights weighing about 50 - 200 g or other objects which can be hung at the top of the spine models.

Procedure:

As shown in the drawing below, the two wires are fastened onto the board and bent. Make sure that the curves are exactly at the same points as shown in the figure. Bend the two spine models so that the top is exactly above the fixing point of the lower part of the spine models. (This is indispensible for the success of the experiment.)

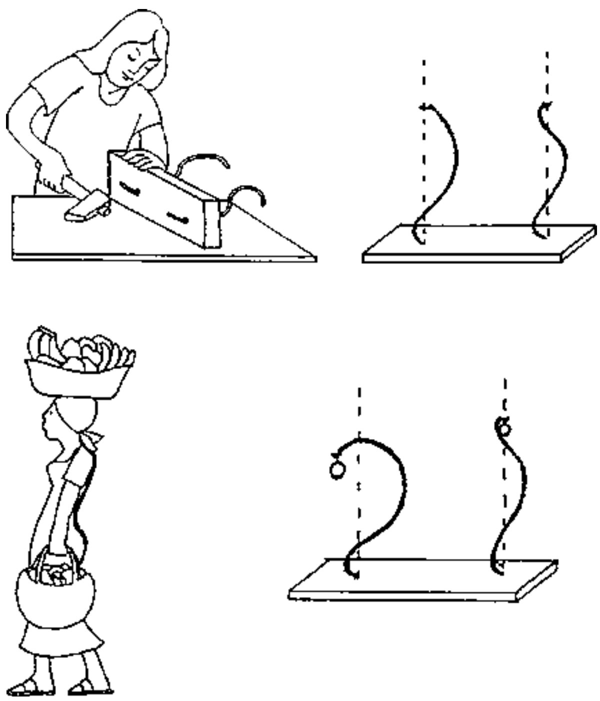

Identical weights are hung from each spine model.

Observation:

The single S-shaped spine sags to a greater extent than the double S-shaped spine.

Consequences

The double S-shaped spine of adolescents and adults is more stable than the single S-shaped spine of babies and apes.

Practical Meaning:

The spine of an adult can be subjected to great pressure.

Because it is more flexible, it absorbs vibrations resulting from walking upright. This protects the brain against the usually occuring vibrations.

In many countries, loads, e.g. water jugs, are carried on the head, because this makes the transport easier.

2.9. COSTAL RESPIRATION

Main Goal:

This experiment illustrates costal respiration.

Information:

When you breathe in, the volume of your chest increases. The muscles between the ribs contract, lifting the ribs, with them the breast bone (sternum) and therefore the complete chest (thorax).

Abdominal breathing usually takes place simultaneously with costal respiration.

The muscular diaphragm contracts, so that it flattens, presses onto the internal organs, and moves the abdominal wall forward. The lungs follow this expansion. Breathing out provokes the reverse sequence.

Materials and Apparatus:

cardboard (or stiff paper)
scissors
cord, paper clips, rubber bands or blades of grass

Procedure:

A model is made as shown in the following diagram.

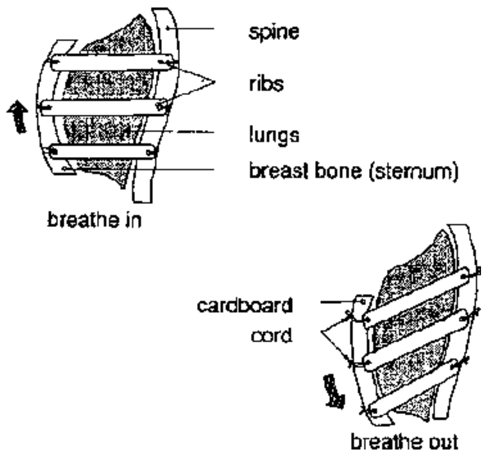

Observation:

If the breast bone is lifted, the chest widens. In reality the lungs expand.

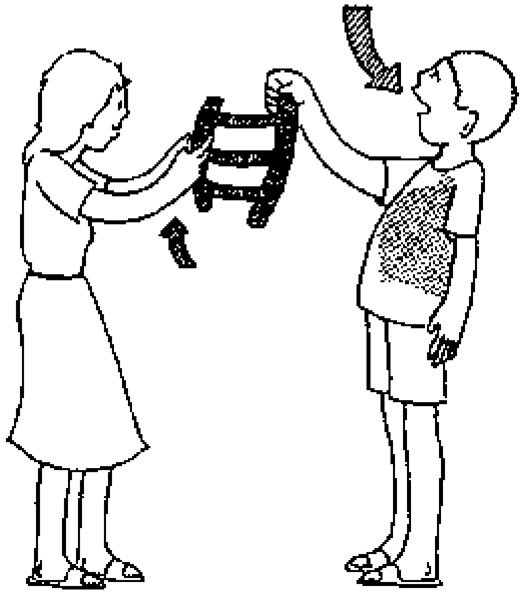

Analysis:

Because of the volume expansion, the air pressure in the lungs drops so that it is lower than the external air pressure. A lower pressure is thus formed and the pressure of the external air forces air **into the lungs.**

When you breathe out the air zone becomes smaller and the air is pressed out.

Addition:

If you pant you will see quite clearly that the abdominal wall arches forward when you inhale. The chest is hardly lifted. If you place one hand flat on the abdominal wall, you can feel the respiratory movement.

2.10. IDENTIFICATION OF CARBON DIOXIDE IN EXHALED AIR

Main Goal:

This experiment illustrates that exhaled air contains carbon dioxide.

Information:

The constituents of food are catabolized into carbon dioxide, water and urea. Carbon dioxide is exhaled. The carbon dioxide proportion of inhaled air is about 0.03% and the oxygen proportion about 20% volume. The carbon dioxide proportion of exhaled air is approximately 4.5% and the oxygen proportion 15.5% volume.

A solution of limewater ($Ca\ (OH)_2$ in water) or a solution of ($Ba(OH)_2$ in water), baryta water, is used as a carbon dioxide indicator.

Materials and Apparatus:

calcium hydroxide or lime or calcium oxide (CaO)
barium hydroxide (made from barium oxide)
water
glass beaker
a glass pipe, a straw or a hollow bamboo cane
filters or clean paper from a cement sack

Procedure:

If no calcium hydroxide (or barium hydroxide) is available, calcium oxide (or barium oxide) should be dissolved in water. These solutions are filtered until they are completely clear.

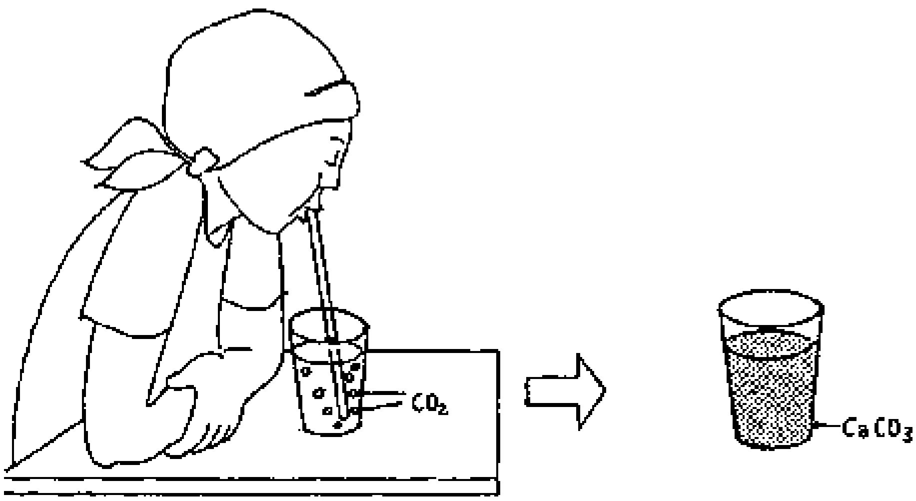

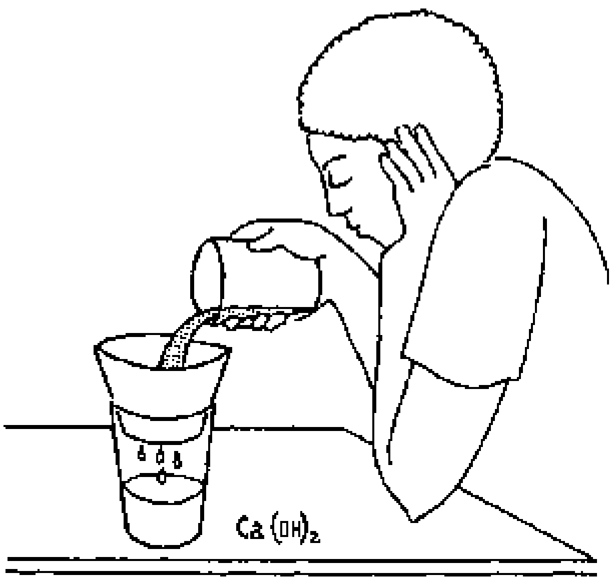

Exhaled air is blown into limewater through the glass pipe.

Observation:

The limewater (baryta water) becomes cloudy.
A white substance is precipitated.

Analysis:

Exhaled air contains so much carbon dioxide that it reacts with calcium hydroxide to form white, hardly soluble calcium carbonate. In the reaction with barium hydroxide, white, hardly soluble barium carbonate is precipitated.

Practical Importance:

With the help of sunlight, plants produce carbohydrates and oxygen from carbon dioxide and water.

Oxygen is essential for human beings and animals.

Addition:

$Ca(OH)_2 + CO_2 \rightarrow CaCO_3 + H_2O$

$Ba(OH)_2 + CO_2 \rightarrow BaCO_3 + H_2O$

Leaving limewater or baryta water in direct contact with air does not cause clouding because the carbon dioxide concentration is too low.

Look up the experiments botany 1.10 and 1.12. Together with the experiment above you can now explain the circle of oxygene and carbon dioxide in nature.

2.11. THE SKIN RELEASES SODIUM CHLORIDE

Main Goal:

This experiment shows that sodium chloride is released by the skin.

Information:

The main task of the perspiratory glands in the skin is to regulate the body temperature. Besides water, sweat contains other products, predominantly sodium chloride - or household salt. This is why perspiration has a salty taste.

Materials and Apparatus:

a. distilled water - available at any garage

2% silver nitrate solution ($AgNO_3$), which can be purchased from a chemist
large beaker holding 1 - 2 litres

b. magnesia sticks, which can be obtained from

a *chemist*
1 candle

Procedure:

a. The glass dish is filled with distilled water.

A test person places one hand into the water and holds it there for about 10-20 minutes.

Then a few drops of silver nitrate solution are added to the distilled water.

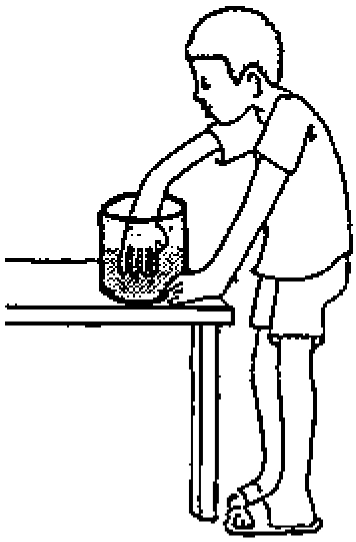

b. Sodium ions can be identified using magnesia sticks and a candle flame. The top of the magnesia stick is moistened with sweat and then held in the candle flame.

Observation:

a. A white precipitate is formed.
b. It can be observed that the flame burns yellow.

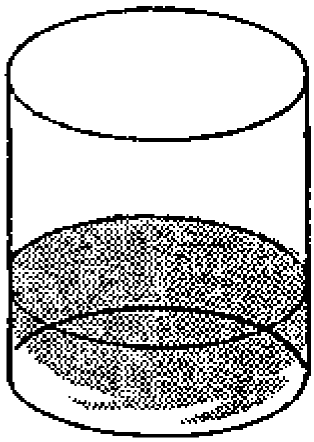

Analysis:

a. The chloride ions together with silver nitrate form white silver chloride.

$$\mathbf{Ag^+ + Cl^- \rightarrow AgCl\downarrow}$$

b. The yellow colouring of the flame indicates the presence of sodium.

Practical Meaning: The skin releases warmth by evaporating water on the skin and with that a remarkable account of sodium chloride. The loss of water is as problematic as the loss of sodium chloride. Loosing too much water can cause circulatory problems.

In countries where it is always hot, it is important that the body receive sufficient sodium chloride, otherwise the high loss of sodium chloride in perspiration can lead to circulatory disturbances as well.

In the last centurie British miners became ill, suffering from too little sodium chloride after sweating very strongly. After drinking weak saltwater they recovered. The products left by perspiration are not all waste products. Nature is not perfect. There are optimal compromises everywhere.

2.12. FINGERPRINTS

Main Goal:

This experiment shows that fingerprints are a typical characteristic of each individual.

Information:

Fingerprints are determined by the structure of the lines of the fingertips.

Materials and Apparatus:

ink or ink pad
white paper

Procedure:

One fingertip is coloured with ink and pressed onto the paper once.

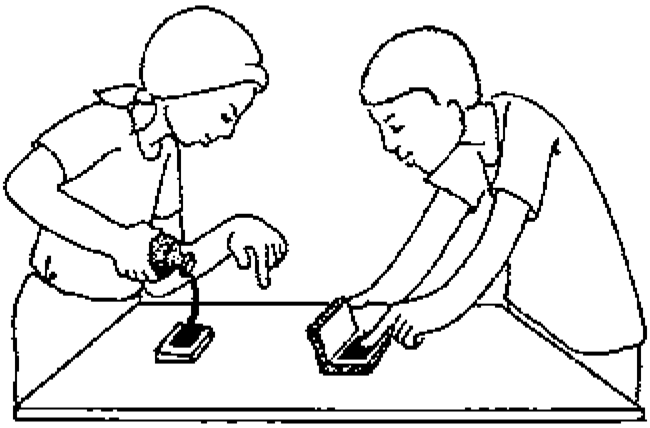

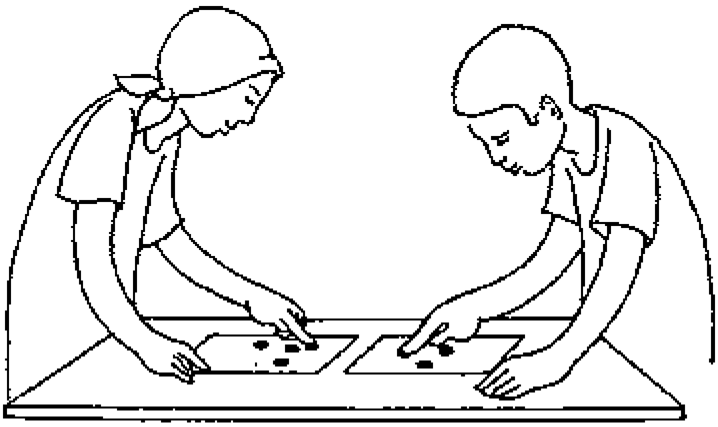

Observation:

A pattern of lines can be seen in black. This pattern is the fingerprint.

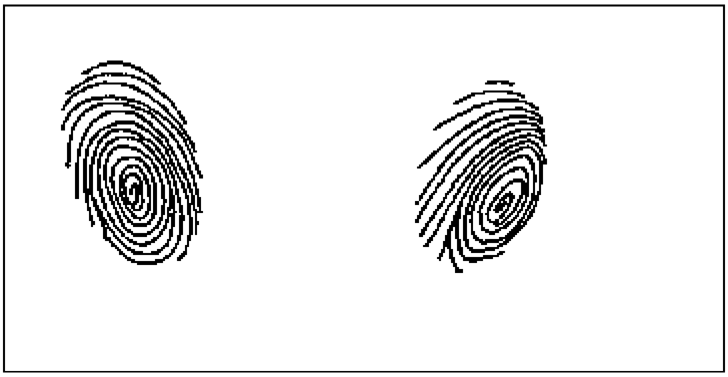

Analysis:

If the fingerprints of different individuals are compared, it can be seen that all of them are different.

Practical Use:

As the fingerprints of every human beings are unique, they are used as an important means of identification in criminology, when they can be used to identify a criminal.

2.13. DISTINGUISHING SEVERAL MATERIALS BY TOUCHING THEM WITH THE FINGER TIPS

Main Goal:

This experiment demonstrates that your finger tips can be used successfully to identify different surfaces.

Information:

see analysis

Materials and Apparatus:

You will require several objects with different surfaces such as a stone, a brick, pieces of bark from different trees, pieces of rough and smoothed wood, different textiles etc.

a scarf or shawl to blindfold a person.

Procedure:

One student is blindfolded and is given three objects to touch and retain the feeling. Then the scarf is removed. The student is allowed to test all objects and he/she must then determine which she/he touched while blindfolded.

Observation:

Different students will show different abilities to identify the objects they touched while blindfolded. But every one is able to distinguish very different things.

Analysis:

In our finger tips we have many sensory cells for touching far more than e.g. on our back.

The more of these cells there are in any area, the better we can identify different surfaces. The largest number of sensory cells for touching per square millimeter are in the tip of our tongue, but you should not test materials which may not be clean with your tongue.

The differences in the results stem from the different experience in identifying things by touching.

2.14. TESTING PULSE FREQUENCY UNDER DIFFERENT CONDITIONS

Main Goal:

This experiment demonstrates that the rate of the pulse depends on the work done immediately prior to measuring.

Information:

see analysis

Materials and Apparatus:

one watch to measure minutes

Procedure:

Look for your pulse on your wrist using the thumb of your other hand. You will find it one thumb length away from the back rim of the hand above the sinews of the inner side of your arm.

You will probably need a little while to find it and feel it well.

One person, perhaps your teacher, says, observing the watch: “go” and you start counting the pulse beats. When he says: “stop” (after exactly one minute) you note the number of pulse beats you counted.

Then everybody does ten knee bends. After this someone gives a starting signal again and you count the pulse beats again for one minute.

Observation:

In the second case you will count a higher number of pulse beats than in the first. You may also be breathing faster especially if you are unaccustomed to sport and physical exercise.

Analysis:

Your body registers the work you do, in this case the knee bends.

It is able to regulate the pulse frequency in order to provide the muscles with enough blood for them to receive sufficient oxygen. That is also why you breath faster.

2.15. DETERMINING THE DIRECTION FROM WHICH A NOISE COMES

Main Goal:

This experiment demonstrates that with both ears you can better determine the direction from which a noise comes than with only one ear.

Information:

see analysis

Materials and Apparatus:

a scarf or shawl to blindfold a person

Procedure:

All students sit in a circle. One of them stands blindfolded in the center of the circle. One student in the circle knocks on something e.g. his chair to produce a noice. The blindfolded student has to point in the direction from which the noise came without turning round.

Another student knocks from a different direction, the blindfolded student points to the source of the second noise.

Repeat the experiment several times.

After ten trials the blindfolded student holds his/her hand over one ear and the experiment is repeated another ten times.

Observation:

With both ears the blindfolded student will probably achieve about 9 right answers out of ten.

When holding a hand over one ear though the student might achieve a score of only some five or six correct answers, or less.

Analysis:

Our ears are very sensitive. They can distinguish the time lapse which occurs if a noise does not come from immediately infront or behind us.

When one listens with only one ear this time lapse can no longer be heard and it becomes more difficult to determine the source of the noise.

2.16. THE SENSITIVITY OF OUR HEARING

Main Goal:

This experiment shows how sensitive our sense of hearing is.

Information:

see analysis

Materials and Apparatus:

nothing

Procedure:

One student stand in front of the classroom with his face to the wall. Another student whispers a number between thirteen and ninety-nine. The first student has to repeat the number.

Try this experiment ten times initially.

The ‘listening’ student should then cover one ear, and the experiment should be repeated another ten times.

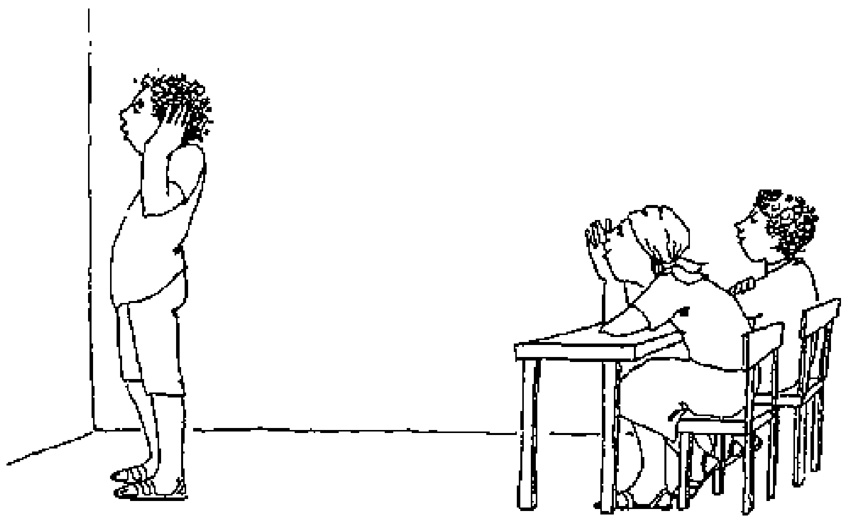

Observation:

In most cases it is not necessary to use both ears to understand whispered numbers.

Where a student does have difficulty he or she may have a hearing impediment.

Analysis:

Both ears are usually equal sensitive. Thus one ear is sufficient to identify whispered numbers.

This test will demonstrate immediately if a student is particularly hard of hearing in one ear.

Hearing difficulties can be caused by many different things and it is always better to consult a doctor immediately.

3. INORGANIC CHEMISTRY

3.1. COMBUSTION ZONES OF A CANDLE FLAME

Main Goal:

This experiment illustrates that the combustion of the gaseous particles of a candle takes place in the outer, the yellow zones of a flame.

In the following text these particles are called “candle gas”.

Information:

The yellow colour of the outer zone of the flame is produced when the soot particles (carbon) light up.

The blue zones of the flame contain candle gas, that is not burning.

The temperature of the yellow zone is higher than that of the blue zone.

Materials and Apparatus:

matches, magnesia sticks
a candle

Procedure:

a. One match is passed through the flame of the candle (see diagram).

b. The same experiment is carried out with a magnesia stick.

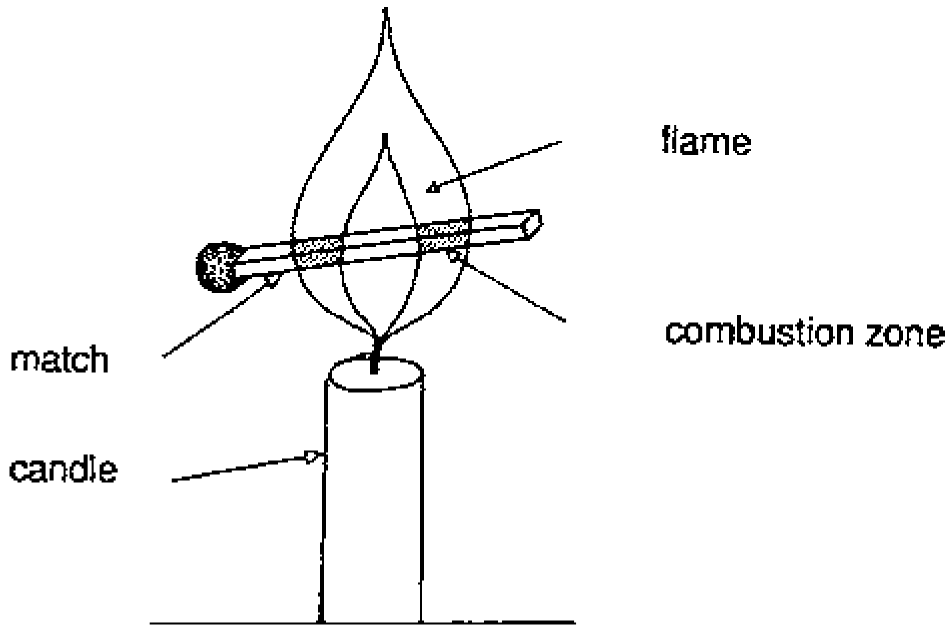

Observation:

a. The part of the match in the yellow zone, is burning.

b. The part of the magnesia stick in the yellow zone lights up in **a** yellow-orange colour.

Analysis:

The dark burnt parts of the match and the glowing parts of the magnesia stick demonstrate that the temperature in the yellow zone is higher than that in the blue zone. The combustion of the candle gas takes place in the yellow zone, as it is only here at the outer part of the flame, that enough oxygen is available and can mix with the candle gas.

Practical Meaning:

With this candle flame experiment the basic characteristics of a common laboratory burner or any other open fire can be demonstrated.

In open fires, a good oxygen supply is required to achieve complete combustion.

3.2. THE CANDLE FLAME AND ITS DAUGHTER FLAME

Main Goal:

This experiment demonstrates that the blue zone of the flame contains unburnt candle gas.

Information:

(see experiment: THE COMBUSTION ZONES OF THE CANDLE FLAME)

Materials and Apparatus:

2 candles
2 tubes (of metal or glass, e.g. eye dropper)
1 clothes peg

Procedure:

The candle gas of the blue flame zone is passed through the tube (see diagram).

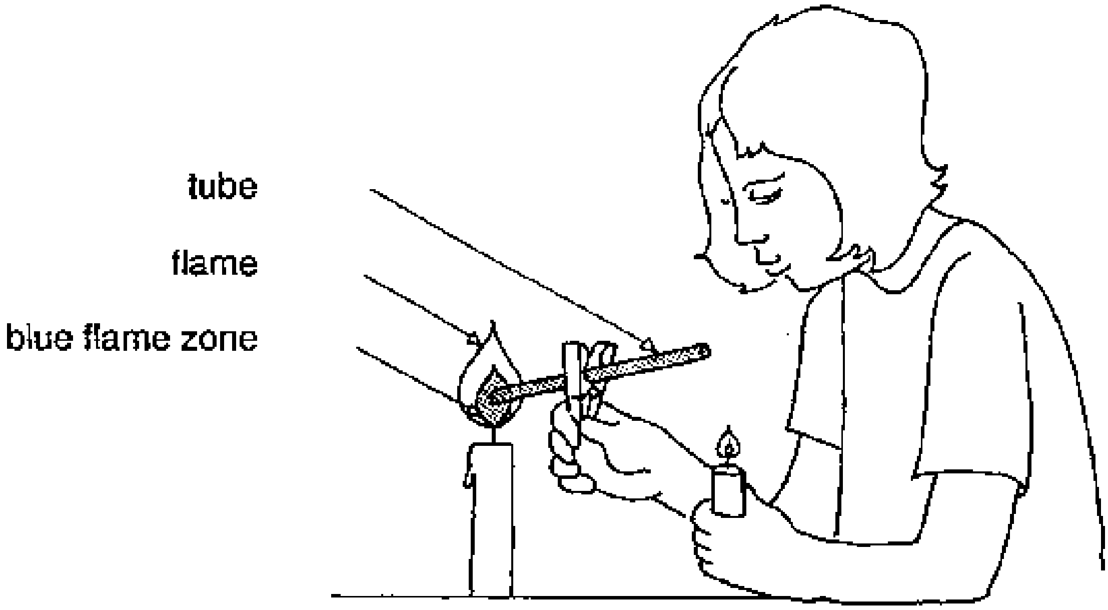

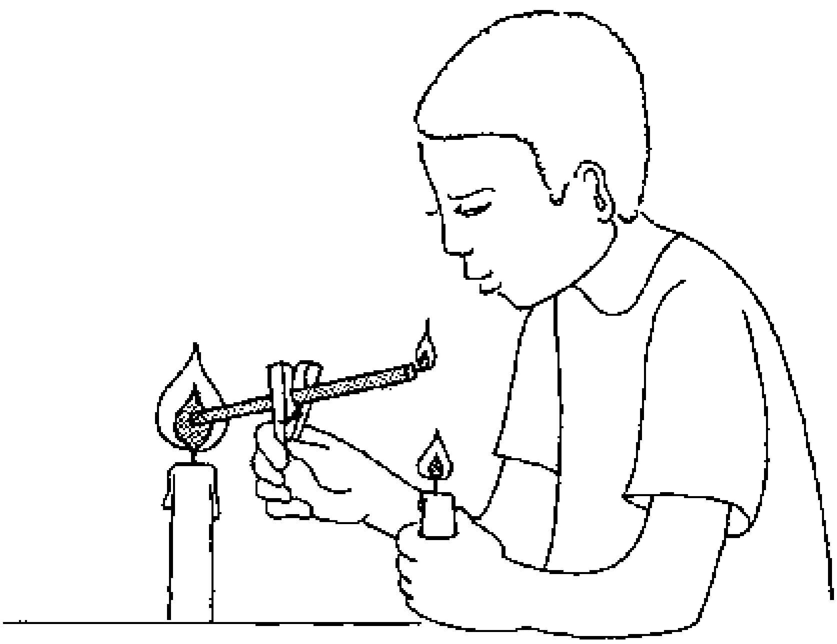

Observation:

This gas can be ignited with a lit candle.

Analysis:

Unburnt candle gas can be found in the blue zone of the flame.

When the candle gas from the blue zone reaches the outer zone, it burns, when atmospheric oxygen and candle gas mix in the right proportion.

Practical Use:

The candle flame has the same structure as the flame of bunsen or alcohol burners.

The most important properties of these burners can be demonstrated with a candle flame.

3.3. COMBUSTION PRODUCTS OF A CANDLE

Main Goal:

This experiment demonstrates that a candle forms soot (carbon), carbon dioxide and water when it burns.

Information:

The candle substance, natural wax or stearin, consists of the elements carbon, hydrogen and oxygen. Carbon can be identified directly as soot, and indirectly as carbon dioxide.

During combustion water is formed. The presence of water provides indirect evidence of the presence of hydrogen.

Materials and Apparatus:

candle
glass vessel
limewater
white copper sulfate (dried blue copper sulfate)

Procedure:

a. The bottom of a glass vessel is held over a burning candle.

b. A cold glass vessel is held upside down over **a** burning candle.

The water which is produced can be identified with finely pulverized copper sulfate.

c. A glass vessel is held over a burning candle.

It is then rinsed with limewater to identify the carbon dioxide produced.

(As carbon dioxide is heavier than air, a great amount of it escapes from the glass dish.)

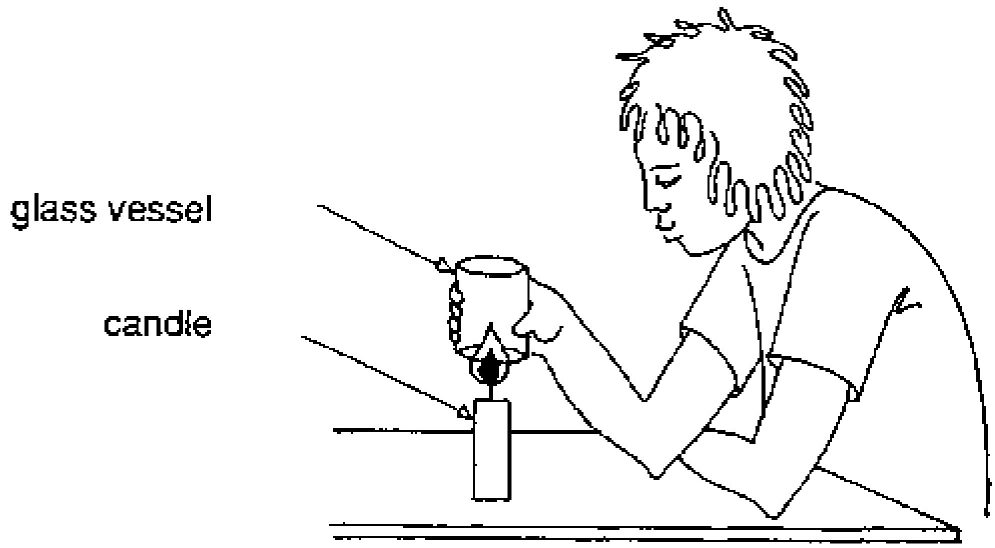

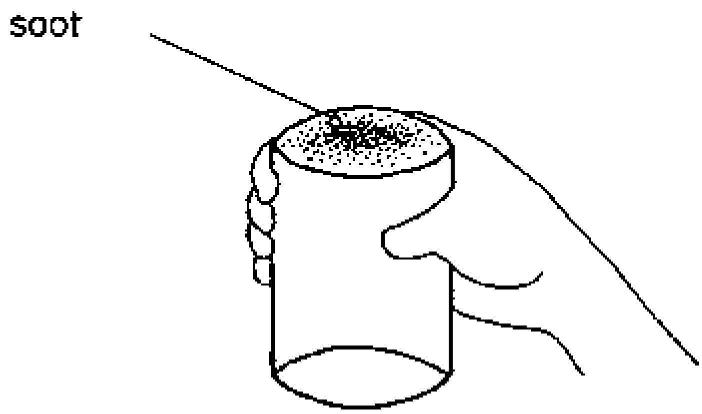

Observation:

a. Soot settles on the glass vessel.
b. A moist film develops. White copper sulfate turns blue.
c. A white precipitate - calcium carbonate - is formed.

Analysis:

The candle substance burns to form soot (carbon), carbon dioxide, and water. Soot is the product of incomplete combustion of the candle substance.

Practical Use:

All organic substances contain carbon and hydrogen.
These elements can always be identified using the above methods.

3.4. THE DETERMINATION OF OXYGEN CONCENTRATION IN THE AIR

Main Goal:

This experiment demonstrates that part of the air is used during combustion.

Information:

The investigation of air compounds shows that air consists of about 20 parts by volume oxygen and about 78 parts by volume nitrogen. The amount of other gases can be ignored for the purposes of the two following experiments. (These other gases are carbon dioxide and inert gases.)

Materials and Apparatus:

part of a neon lamp (about 30 cm) or a tall glass
small candle - should be light enough to float in water
rubber stopper
large glass dish
a clamp stand if available (if not, the glass can be held as shown below)

Procedure:

As shown in the following diagram, apparatus is constructed, with which the oxygen content of air can be approximately determined.

During combustion of the candle, the rising water fills the space left vacant by the air used to form carbon dioxide and water.

(The candle is extinguished before all the oxygen is used. The carbon dioxide formed dissolves in the water.)

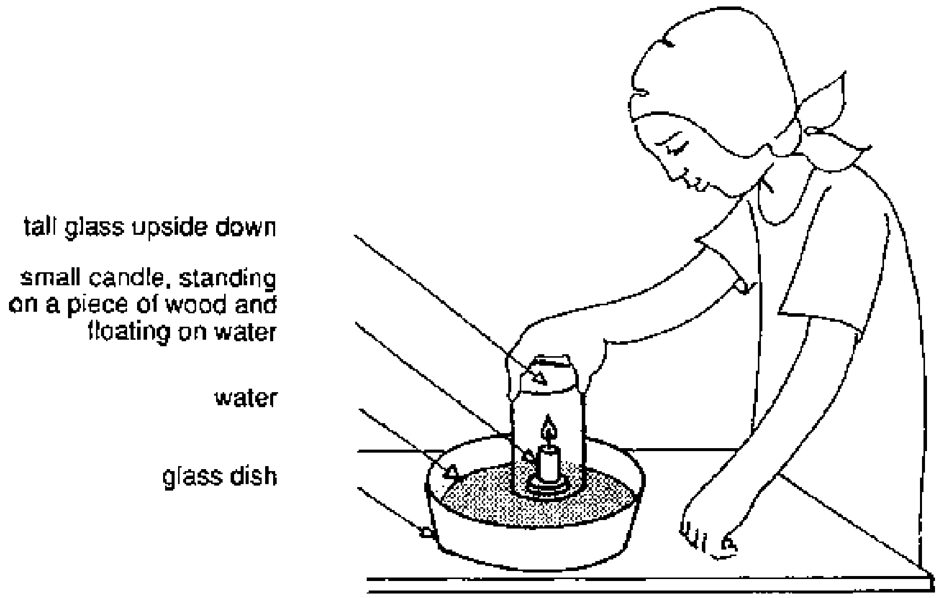

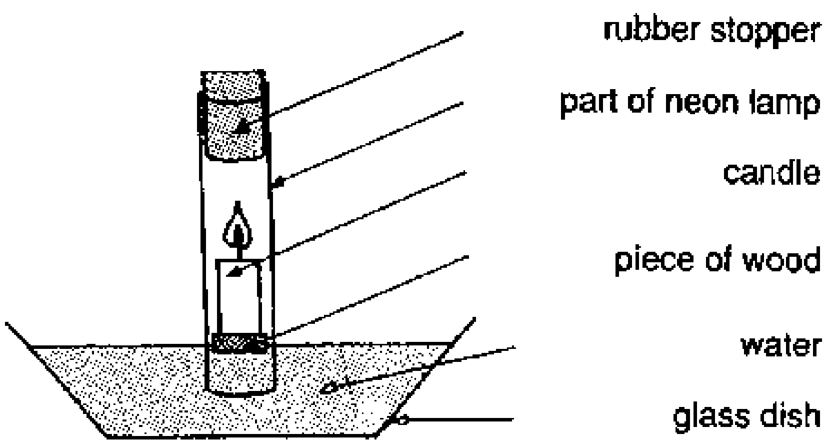

Observation:

While the candle light gradually becomes dimmer, the water level in the neon lamp rises. The rising water occupies about one fifth of the air volume which was present at the beginning of the experiment.

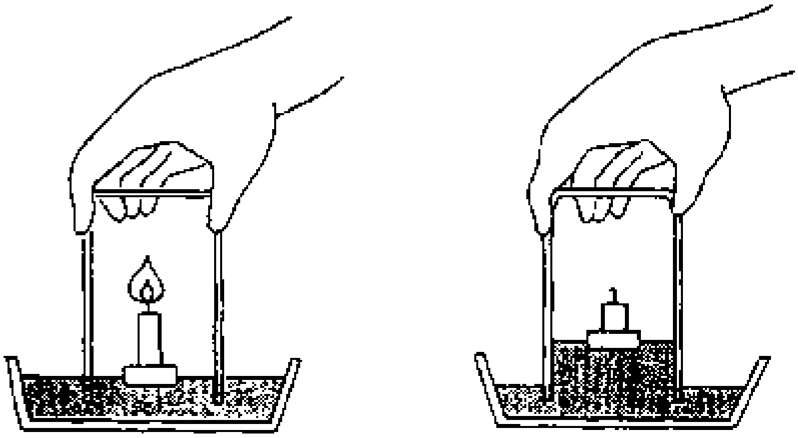

Analysis:

During combustion, the candle uses about one fifth of the air volume. This part of the air is called oxygen.

Practical Meaning:

Plants are the sole producers of oxygen on Earth.

They guarantee the constant oxygen content of the air. Any massive disturbance to the plant world would automatically seriously perturb the lives of man and animals. Human beings and animals need atmospheric oxygen to breathe. During the process of metabolism, carbon dioxide is produced in their bodies. With the help of solar energy, plants produce oxygen and carbohydrates from carbon dioxide and water (CO_2 and H_2O).

3.5. NITROGEN EXTINGUISHES A CANDLE FLAME

Main Goal:

This experiment demonstrates that a candle, or any other kind of flame, does not burn in nitrogen.

Information:

(see experiment: DETERMINATION OF OXYGEN CONCENTRATION IN THE AIR)

Materials and Apparatus:

part of a neon lamp (about 30 cm) or a tall glass
small candle - should be light enough to float in water
rubber stopper
glass dish
a covering plate made of wood, glass, or metal
a candle attached to a wire

a stand if available

Procedure:

First the experiment “DETERMINATION OF OXYGEN CONCENTRATION IN THE AIR” is carried out. Then the dish is closed under water with the cover plate and turned upside down.

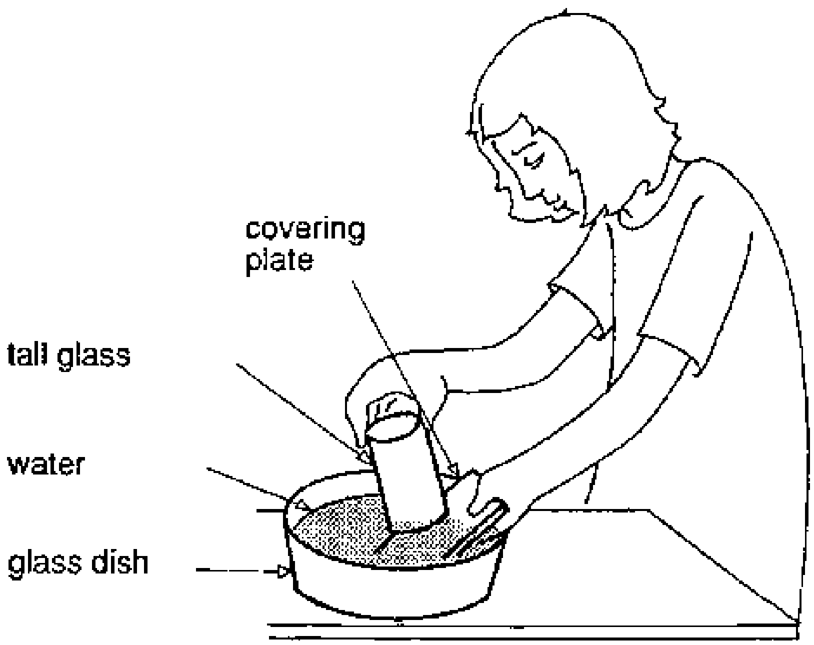

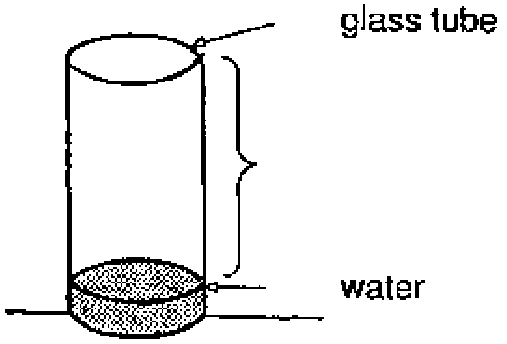

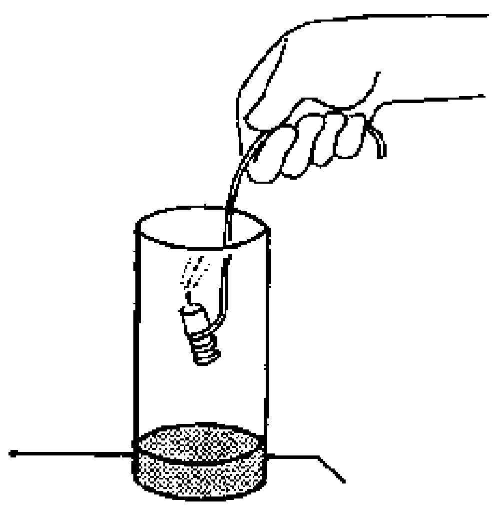

As shown in the diagram below, a burning candle is introduced into the remaining gas.

Observation:

The flame is extinguished.

Analysis:

The remaining gas extinguishes the flame. This gas is called "nitrogen".

Air consists of about 78% parts by volume nitrogen. (Oxygen supports combustion. Other gases, e.g. nitrogen, carbon dioxide, inert gases do not support combustion.)

3.6. ATMOSPHERIC OXYGEN SUPPORTS COMBUSTION

Main Goal:

This experiment illustrates that combustion can only take place if there is a constant supply of oxygen.

Information:

Without oxygen, combustion cannot take place.

The oxygen necessary for combustion is present in the air. If a burning candle is placed in a small closed volume, it burns until the available oxygen is nearly used up.

Materials and Apparatus:

candle
glass vessel
cover plate

Procedure:

a. A glass vessel is placed upside down over a burning candle (see diagram).

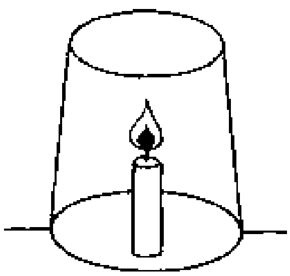

b. A burning candle is placed in an open glass vessel. With the help of the cover plate, the vessel is first half and then completely covered, (see diagram).

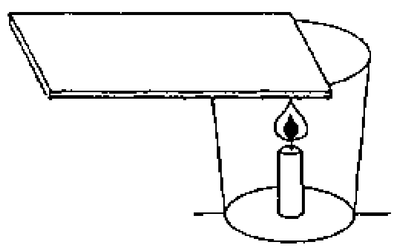

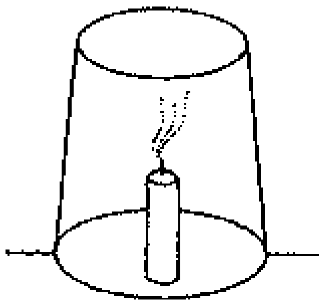

Observation:

a. During the course of the experiment, the flame gradually becomes smaller until it is finally extinguished.

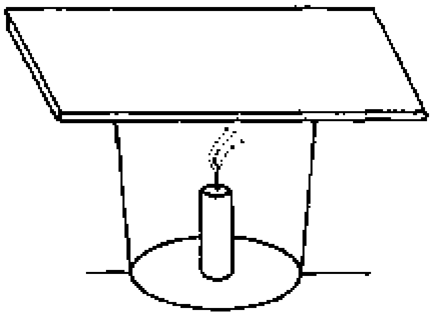

b. The candle is not extinguished until the vessel is completely covered.

Analysis:

A candle can only burn if there is a constant supply of oxygen.

The component of air which the candle needs for combustion is called "oxygen".

Practical Use:

The various ways of extinguishing fire all work by preventing the continued supply of oxygen.

Without oxygen combustion does not take place.

Some methods used to extinguish fire include spreading: water, sand, or carbon dioxide over the flames so that oxygen is kept away from them.

3.7. CARBON DIOXIDE AS A FIRE EXTINGUISHER

Main Goal:

This experiment demonstrates that a candle or other burning material is extinguished in carbon dioxide.

Information:

As carbon dioxide is heavier than air, it sinks when poured out of a dish.

Materials and Apparatus:

candle
glass dish or bottle
Alka Seltzer (1/2 or 1 tablet)

Procedure:

One Alka Seltzer tablet is mixed with a few drops of water in a glass dish.

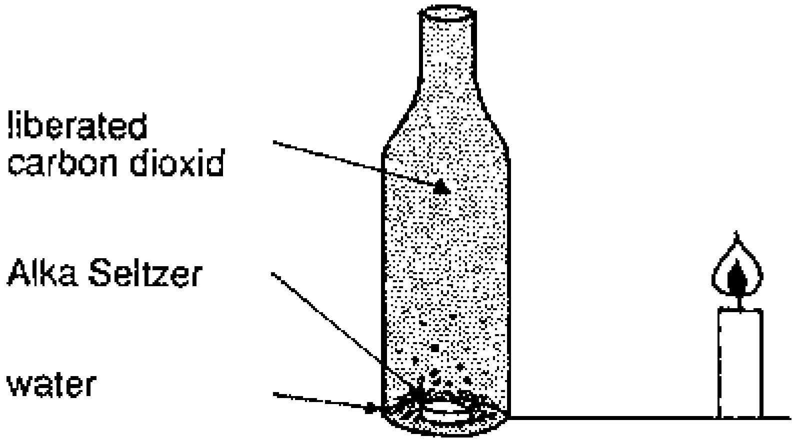

The carbon dioxide liberated is poured over a burning candle.
(A burning candle can also be dipped into the dish.)

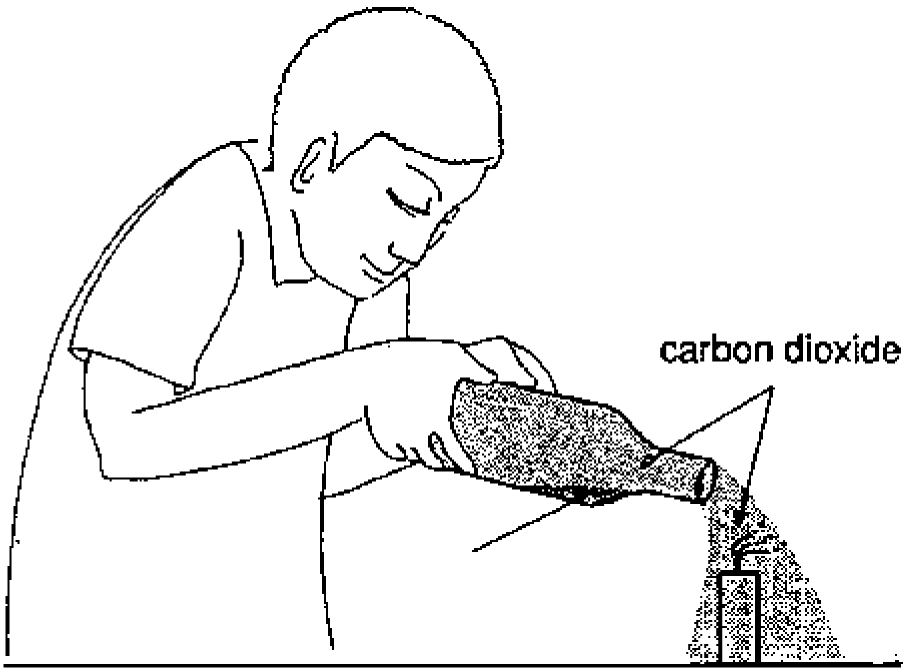

Observation:

The burning candle is extinguished.

Analysis:

A candle is extinguished in an atmosphere of carbon dioxide. Obviously the carbon dioxide is concentrated at the bottom when poured out of the glass dish.

Practical Use:

The air contains 0.03 per cent carbon dioxide by volume. If there is more than 5 per cent of this gas in the air, respiration is impeded. Exhaled air contains about 4 per cent carbon dioxide by volume.

Carbon dioxide does not conduct electricity and does not leave any kind of residue. For this reason it is used instead of water as a fire extinguisher in chemical and nuclear plants.

3.8. THE FORMATION OF CRYSTALS

Main Goal:

This experiment demonstrates the formation of crystals, and proves that dissolved substances are present in solutions, even if they cannot be seen.

Information:

Salts form crystals. The longer it takes for water to evaporate from a salt solution, the more even the crystals become.

Every salt has a typical crystalline form.

On the basis of this experiment, some further terms can be explained:

solvent
dissolved substance
soluble/insoluble
water-soluble
precipitation

Materials and Apparatus:

sodium chloride (household salt)
flat dishes
1 glass vessel
water

Procedure:

Household salt is added to 50 ml of water (the solvent), until no more salt will dissolve.

Be sure that no solid salt is present anymore in the saline solution.

About 5 ml of the saline solution is poured into each of the glass dishes.

The water takes several hours or even a day to evaporate.

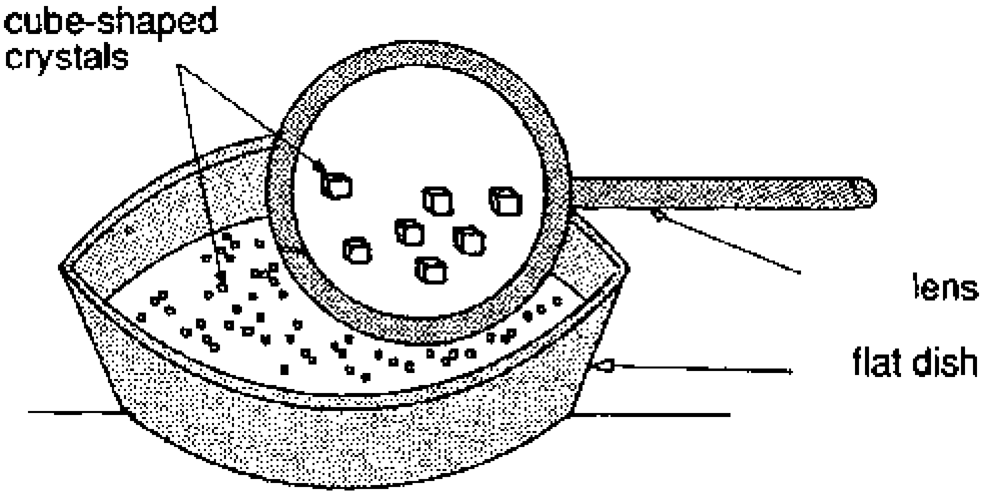

Observation:

The water evaporates.
Cube-shaped crystals form.

Analysis:

Sodium chloride forms cube-shaped crystals.

Addition:

Various substances can be identified from their crystaline form.

Practical Meaning:

Salt is obtained from sea water in some hot countries.

The sea water is channeled into flat basins (salterns).

The sun causes the water to evaporate. The salt, which was dissolved in the sea water, is left as residue. Sea water contains 3% sodium chloride (household salt).

3.9. SALT WATER IS HEAVIER THAN DRINKING WATER

Main Goal:

Solutions always have a density higher than that of the solvent. That is to say that 1 cm^3 solutions has great mass and weights more than 1 cm^3 of the solvent.

Information:

see “Main Goal”

Materials and Apparatus:

salt water - sodium chloride dissolved in water
drinking water
2 glass dishes, glass stick
ink or other colours

Procedure:

2 - 3 drops of ink are added to the salt water, which is then carefully added to the drinking water. This is best done by means of a glass stick along which the salt water runs down.

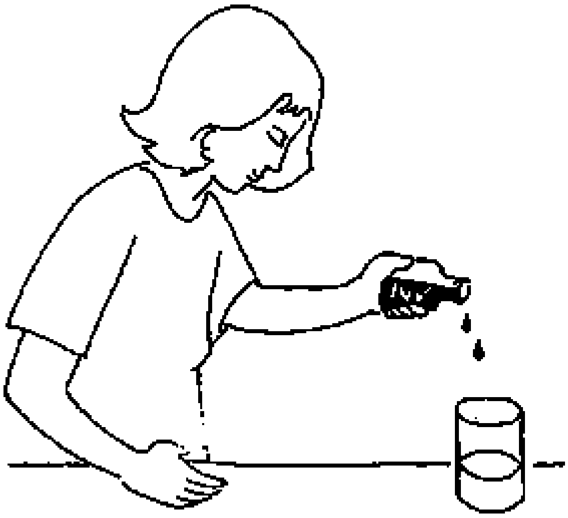

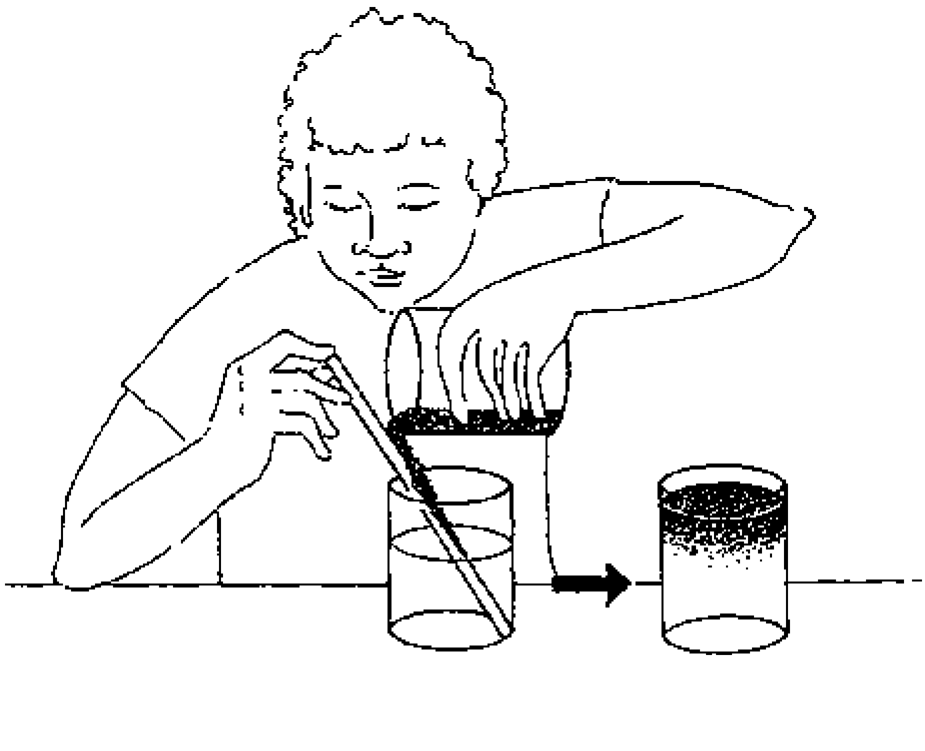

Observation:

The coloured salt water sinks to the bottom of the dish.

Analysis:

Salt water has a higher density than drinking water. However, drinking water also contains dissolved salts. Therefore, it is heavier than distilled water (completely pure water) without any dissolved salts. Solutions have always a higher density than solvents.

3.10. SEPARATION OF SOLID MIXTURES

Main Goal:

The experiment illustrates that solid mixtures can be separated using their physical properties.

Information:

In contrast to a compound, the single substances of a solid mixture exist independently in an unaltered form. Their individual physical properties are preserved. Using these known properties, the single substances can be separated from each other.

Materials and Apparatus:

salt (sodium chloride)
sand iron filings (cutted iron wool)
magnet
filter papers
filter
glass dish
burner, candle
tripod
paper
water
wooden stick, spoon

Procedure:

Salt, sand and iron cuttings are mixed up on a sheet of paper.

(1) The iron cuttings are removed from the mixture with the help of the magnet.

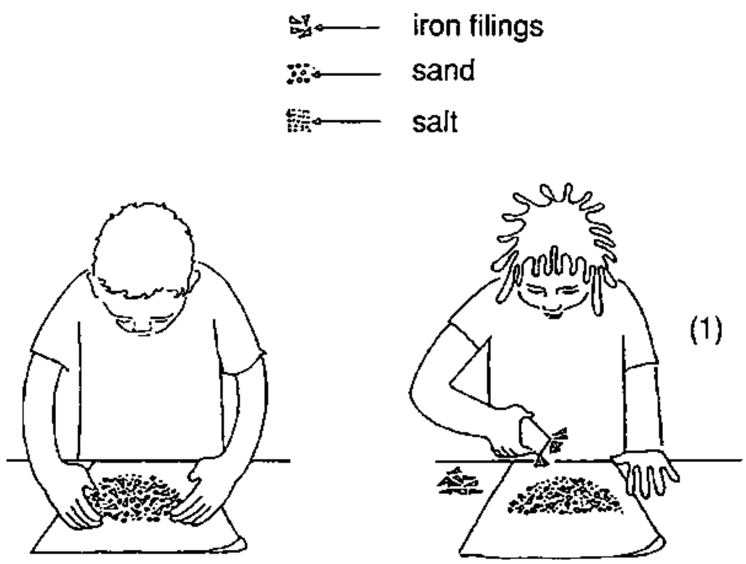

(2) The salt-sand mixture is added to 30 ml of water, stirred well, and filtered. The filtration residue is rinsed 2 - 3 times with water. Then it is dried in the air.

(3) Using the burner, the filtrate (salt solution) is slowly evaporated until it is dry.

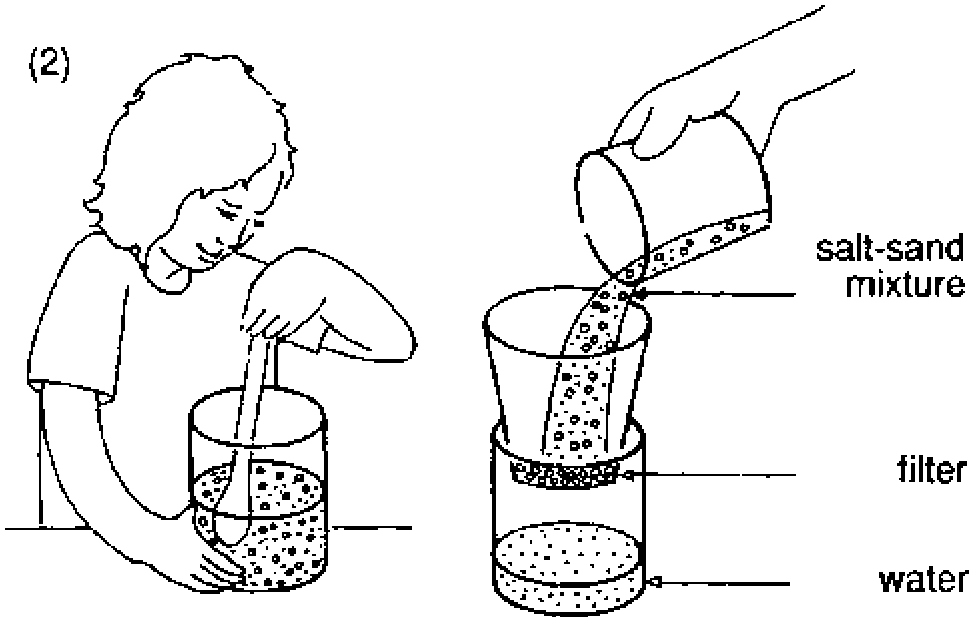

Observation:

The magnet attracts the iron cuttings.

The salt dissolves in water.

The sand does not dissolve but is collected on the filter paper.

After the water evaporates, the salt is left as residue. In a solid mixture, the properties of each substance are preserved.

Analysis:

By means of a magnet, iron is separated from other kind of metals and other substances, e.g. in junkyards.

There are several other methods for obtaining salt. One is by evaporation of sea water and another, the washing out of salty soil.

3.11. THE CORROSION OF IRON

Main Goal:

This experiment demonstrates that moistened iron corrodes faster (corrodere - Latin: to gnaw away), than dry iron.

Information:

When the air is humid, iron reacts with oxygen to form rust.

Materials and Apparatus:

iron wool, iron filings
2 glass vessels
water

Procedure:

a. Some dry iron wool is put into the first glass vessel,
b. Some wet iron wool is put into the second glass vessel.

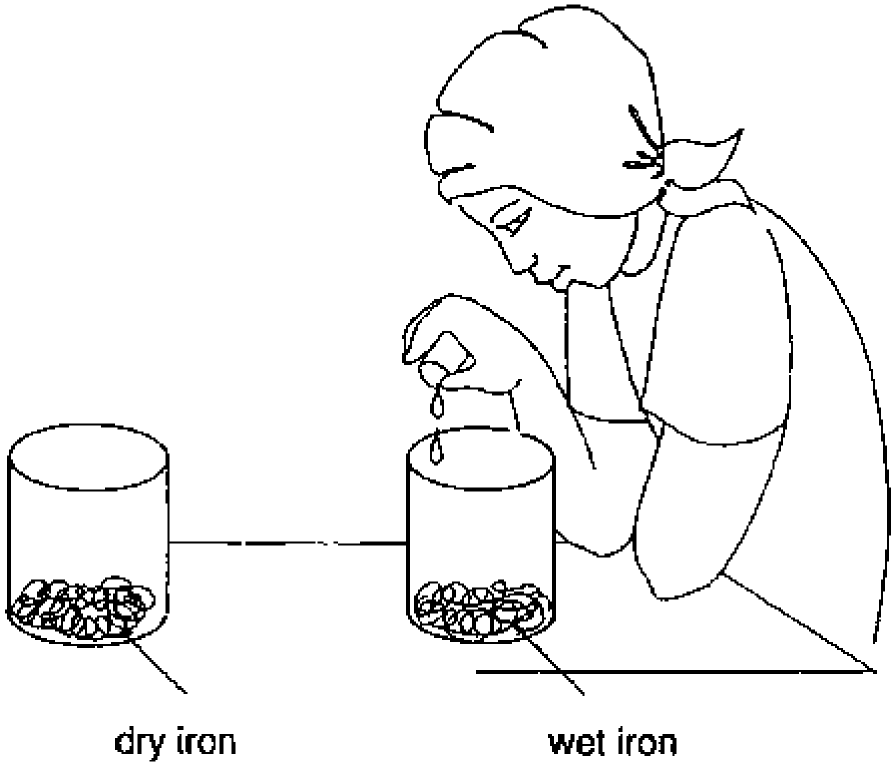

The experiment takes some days.

Observation:

The moistened iron wool has turned a brown colour. It has become brittle.

Analysis:

It can be concluded that rust has been formed.
Moist iron rusts faster than dry iron.

3.12. THE IMPORTANCE OF AIR DURING THE PROCESS OF CORROSION

Main Goal:

The experiment demonstrates that air plays a role in the process of corrosion.

Information:

In humid air, iron reacts with oxygen to form rust.

Materials and Apparatus:

iron wool
1 test tube
1 large glass dish
water
sodium chloride

Procedure:

a) The experimental apparatus is constructed as shown in the following diagram and observed for several days.

Leave some space between the open end of the test tube and the bottom of the glass dish.

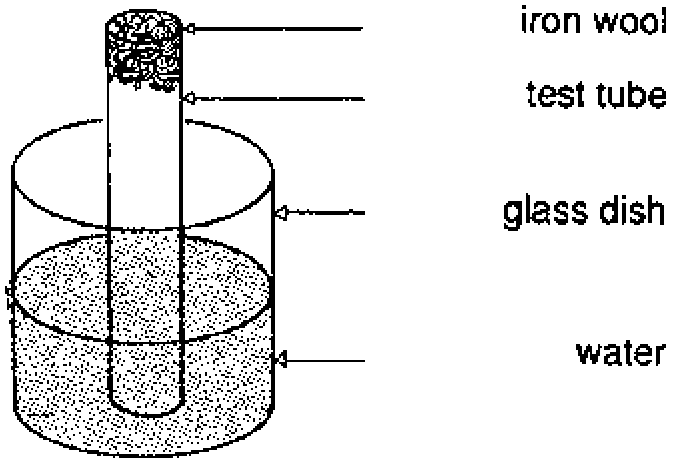

b) Do the same experiment in parallel with salt water in place of water.

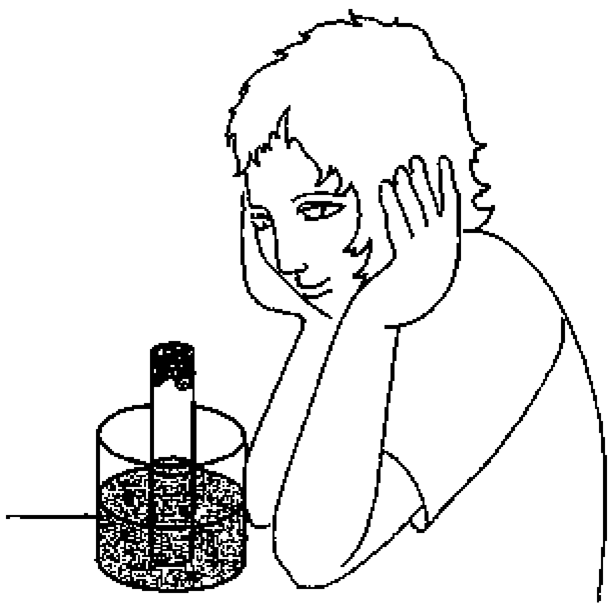

Observation:

The iron wool has corroded.
Some water has entered the test tube.
The corrosion is faster in the presence of a dissolved salt.

Analysis:

When iron corrodes, a part of the air is used to form rust together with the iron and the water. This proportion of the air is called "oxygen".

Iron corrodes when water and oxygen are present. Its formation is increased by the presence of a dissolved salt.

Practical Use:

Iron is protected against corrosion by a rust inhibitor (special paint).

3.13. TINS ARE PROTECTED AGAINST RUST

Main Goal:

The experiment shows that tins are protected against corrosion.

Information:

Tins consist of tinned sheet iron.
This is iron which is plated with tin.

Materials and Apparatus:

2 tins
1 nail
2 rags
water

Procedure:

A pattern is scratched with the nail into one of the tins.

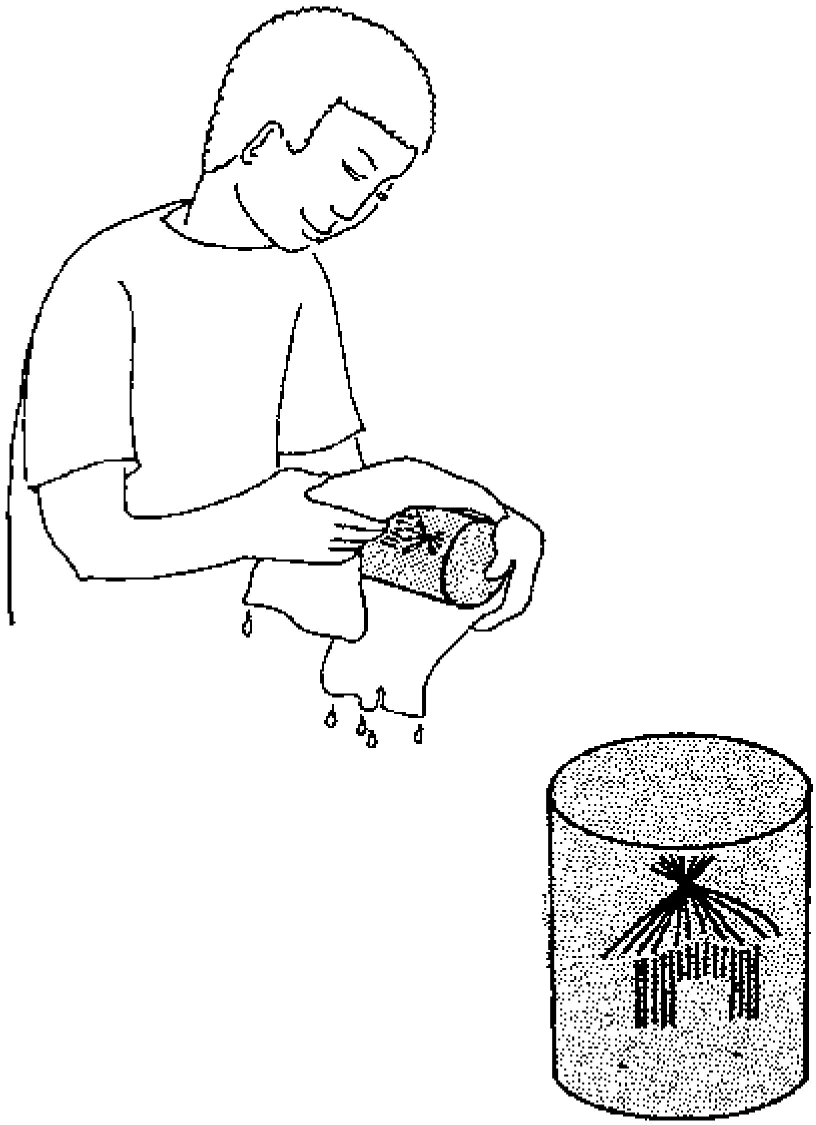

The two tins are wrapped in moistened rags and kept wet for some days.

Observation:

Clearly visible rust traces can be seen along the lines of the pattern, whereas the other tin does not show any signs of rust.

Analysis:

Tins are plated with a protective layer, which prevents corrosion.

3.14. INVESTIGATION OF RUST

Main Goal:

The experiment demonstrates that rust is a different material from iron.

Information:

Rust consists of iron oxide (trivalent iron) and iron hydroxides (trivalent iron).

Materials and Apparatus:

rust
iron wool
magnet

Procedure:

a. The physical properties of iron are examined, such as flexibility, magnetism and colour.

b. Rust is examined for the same physical properties.

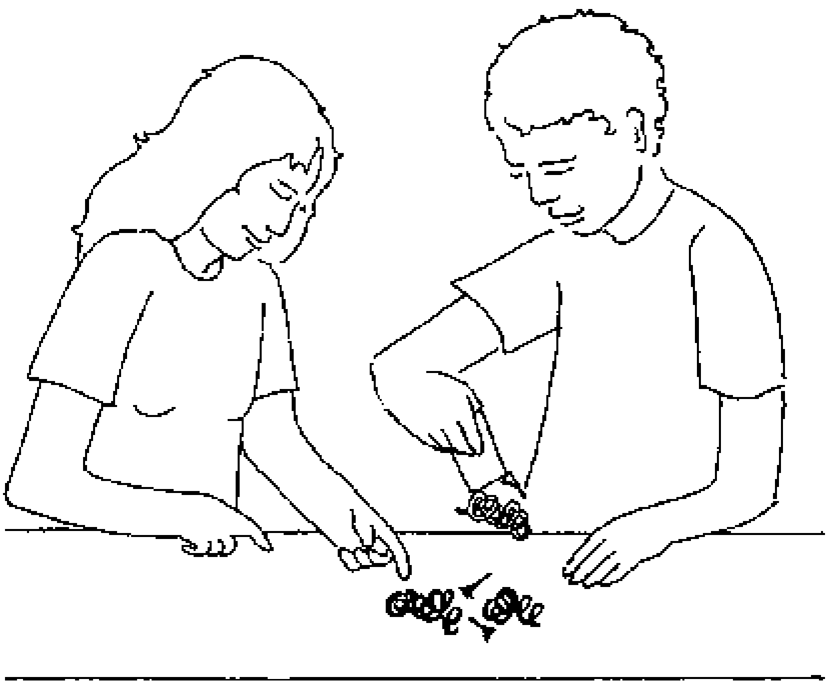

Analysis:

Iron is attracted by a magnet; we say it is ferromagnetic.

As rust and iron display completely different properties, they must be two different materials.

Practical Use:

The porosity of rust encourages the continuing reaction with air and humidity until finally the iron parts rust through.

This can be observed in cars. In technology, different methods are used to prevent corrosion, such as plastic covers, metal covers, and rust inhibiting paint.

3.15. THE ELECTROLYSIS OF SODIUM CHLORIDE

Main Goal:

This experiment illustrates the principle of electrolysis.

Information:

With the help or direct current, chlorine and hydrogen can be separated from a sodium chloride solution. Chlorine develops as gas at the positive pole (anode) and hydrogen gas at the negative pole (cathode).

Sodium ions are collected also at the cathode where sodium appears as metal.

An additional product is sodium hydroxide solution.

(Warning: A detonating mixture of chlorine and hydrogen may be formed. **Chlorine is toxic!)**

Materials and Apparatus:

household salt (sodium chloride) (5-10 g)

2 copper wires about 15 cm long, insulated apart from the last 3 cm at each ends of the wires, which shall be knocked flat.

glass vessel

battery, about 4.5 V

(indicator, e.g. litmus, see experiment: VEGETABLE INDICATOR - ANTHOCYANE)

Procedure:

The household salt is dissolved in water.

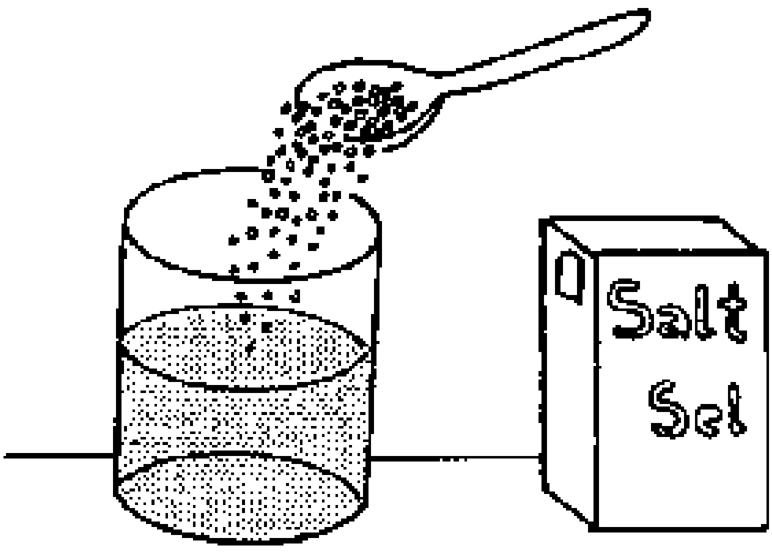

The two electrodes are attached to the battery and then dipped into the solution.

(An indicator can be added to the solution. In addition, the gases which escape can be collected - see experiment: ELECTROLYSIS OF WATER - and then the detonating gas test can be performed.)

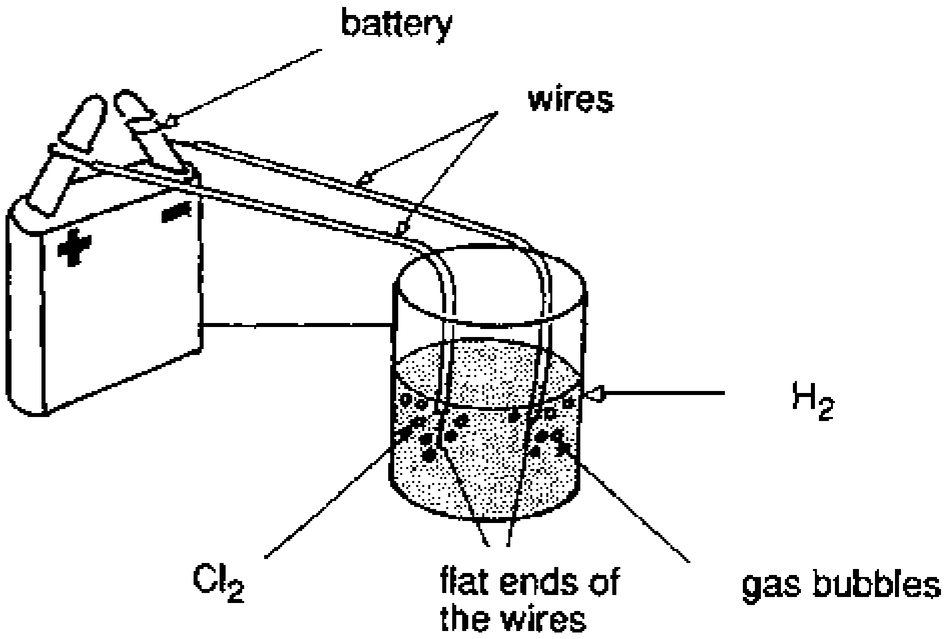

Observation:

Gas bubbles rise at the two poles.

There is a smell of chlorine.

(Near the cathode, the litmus turns blue after a while. Near the anode it is bleached.)

Analysis:

Chlorine gas is released at the positive pole (anode).

At the negative pole (cathode) hydrogen gas is generated and metallic sodium is collected.

(The change of colour indicates an alkali, which is caustic soda solution. Chlorine dissolves well in water and bleaches colours.)

Practical Use:

The electrolysis of sodium chloride is a technique used to produce chlorine.

Chlorine is used as a disinfectant in swimming pools.

In addition, large quantities of chlorine are used to produce chlorine compounds (e.g., hydrogen chloride (HCl), phosgene ($COCl_2$), chlorinated hydrocarbons (poly vinyl chloride)). Because metal is deposited at the cathode, electrolysis has important industrial applications for manufacturing metal. Aluminium, magnesium, sodium and zinc are often produced in this way.

3.16. THE ELECTROLYSIS OF WATER

Main Goal:

To demonstrate that water is a compound of hydrogen and oxygen.

Information:

With a constant voltage of 4,5 V, delivered by a battery, water can be decomposed into hydrogen and oxygen. The effect is more impressive when two batteries in series are used.

Materials and Apparatus

1 glass vessel (beaker), filled with water,

copper or iron electrodes

insulated wire

2 batteries, serially connected, the two electrodes, covered by test tubes, about 1.5 cm separated

sulphuric acid

wood chip

candle, matches

wooden board (ca. 10 × 20 cm)

Procedure:

The following apparatus is set up.

A few drops of sulphuric acid are added to the water. (This increases conductivity.)

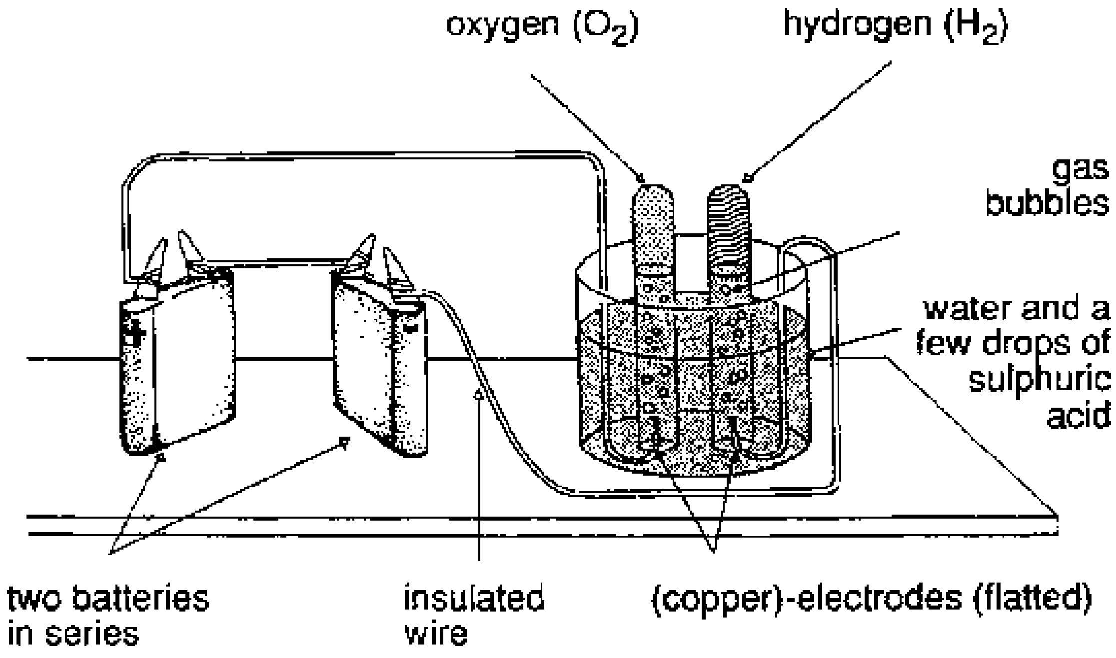

The test tubes are completely filled with the sulphate water, covered with the thumbs and turned upside down over the electrodes.

a. When the apparatus is complete, the electrodes are connected.

b. Shortly before the right test tube (negative pole) is completely filled with gas, **a** candle is lit. The test tube is covered with the thumb after the complete displacement of the water. It is taken out of the water and Kept upside down.

c. Before the left test tube is taken out of the water in the same manner as the right one, a wood chip is lighted. The glowing wood chip is dipped into the test tube.

Observation:

a. Gas bubbles are formed at both poles.

They displace the water from the test tubes.

b. An explosion is heard and perhaps of blue flame may be seen.

c. The glowing wood chip lights up in the test tube.

Analysis:

The two test tubes fill with gas.

The gas in test tube (A) is called “hydrogen”.
Hydrogen burns with a blue flame.

The gas in test tube (B) is called “oxygen”.
Oxygen supports combustion.

Water consists of the element hydrogen and oxygen.

to b.) The explosion, which is not dangerous on such a small scale, is the so-called “oxyhydrogen gas reaction”.

Hydrogen and oxygen react to form water.

$$2\ \mathbf{H_2 + O_2 \rightarrow 2\ H_2O}$$

Practical Use:

Pure hydrogen is used for autogenous welding or cutting. In cutting or welding torches, oxygen is directed into a hydrogen stream shortly before its combustion.

With a surplus of oxygen, metals can be cut.

With a surplus of hydrogen, metals can be welded.

3.17. THE EXPLODING TIN

Main Goal:

This experiment demonstrates impressively the danger of a hydrogen-oxygen mixture.

Information:

If a hydrogen-air mixture is ignited, it reacts with a loud explosion, and water is formed. A hydrogen-oxygen mixture with the proportions 2: 1 is dangerous.

Materials and Apparatus:

1 coke can, or metal tea caddy
1 nail
1 hammer
1 pair of sheet-iron shears
1 piece of adhesive tape
1 flask of compressed hydrogen matches

Procedure:

The top of the coke can is cut off, using the sheet-iron shears.

As shown in the following diagram, 2 small holes are cut in the can.

These two holes are covered with adhesive tape or adhesive plaster.

As shown in the diagram, the can is filled with hydrogen, taken from the flask, for one minute. It is placed on the table.

The flask with compressed hydrogen is sealed and placed several metres away from the can.

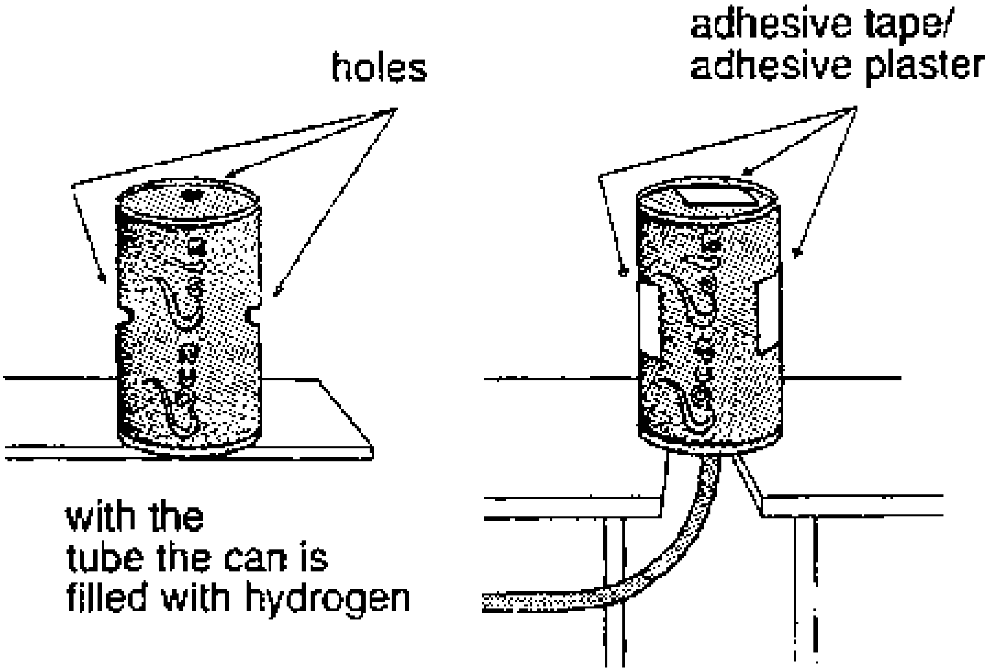

The adhesive tape is removed, a match is lit, and the flame is held close to the upper hole.

Then move back several steps.

(The experiment is very impressive in a darkened room.

However, one window or door should be left open.)

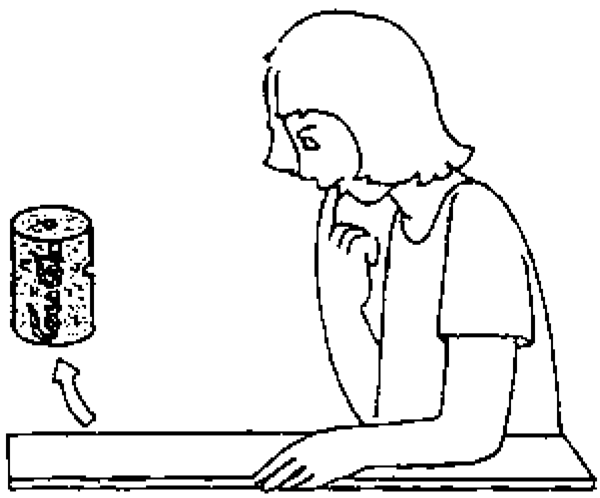

Observation:

When the gas is ignited, a light explosion can be heard. The hydrogen burns with a blue flame.

A faint whistling sound, can be heard. It becomes louder, and is followed by a loud bang.

The tin is lifted from the table. A faint flame can be seen.

Analysis:

Air seaks into the tin, through the holes in the sides. The air-hydrogen mixture explodes.

Only oxygen and hydrogen produce this reaction, which is known as the "oxyhydrogen gas reaction".

A 2: 1 hydrogen-oxygen mixture is especially dangerous.

$$2\ H_2 + O_2 \rightarrow 2\ H_2O$$

Practical Use:

A high temperature of up to 2000° C is needed to weld iron parts together. This temperature is reached when hydrogen and oxygen reacts.

With a welding torch, this combustion is not dangerous.

3.18. VEGETABLE INDICATOR - ANTHOCYAN

Main Goal:

The pupils learn to distinguish between an acid and an alkali with the help of an indicator.

Information:

The word “indicator” is derived from the Latin “indicare”: meaning to show. Indicators change colour according to the medium with which they are in contact.

Anthocyans are vegetable colourings, which form salts with acids and alkalies. The salt formation with an acid gives a red colour and the salt formation with an alkali a blue colour.

Anthrocyans can be produced from red cabbage or red corn.

Materials and Apparatus:

red cabbage juice (litmus)

a. lemon juice

acetic acid
a selection of other acids (HCI, H_2SO_4, etc.)

b. a selection of alkalies (NaOH, KOH, etc.)

a few small dishes

Procedure:

The leaves of the red cabbage are cut into small pieces, placed in boiling water. The corn is also pressed and placed in boiling water.

a. 1 ml of each of the various acids and alkalies are poured into separate dishes, one substance per dish.

b. 2-3 drops of indicator are added to each solution.

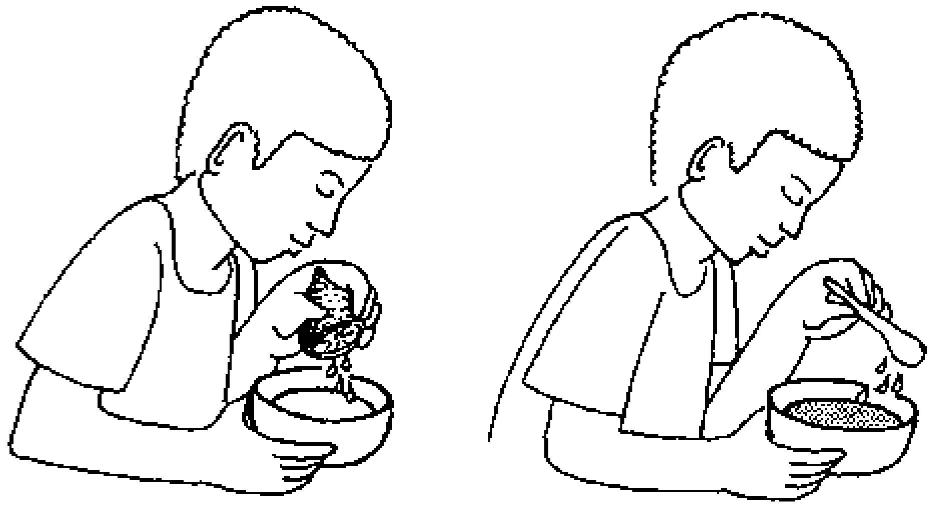

Observation:

The colour of the indicator is red-violet in the acidic range (a.), whereas it is green-yellow in the alkaline range (b.).

Analysis:

With the help of indicators, acids and alkalies can be identified.

3.19. ACID AIR - ACID RAIN

Main Goal:

This experiment introduces sulphurous acid and the problem of "acid rain".

Information:

If sulphur is burned, sulphur dioxide is produced. This gas forms "sulphurous acid" if it is added to water.

Diesel oil and fuel oil both contain sulphur.

This experiment demonstrates that non-metal oxides and water form acids. (Carbon dioxide is also formed.)

Materials and Apparatus:

Diesel oil or fuel oil

1 wick or cotton thread or rag
1 dish
1 covering plate (metal) with a hole for the wick
1 funnel
1 piece of tubing, with a glass-pipe
1 tall glass vessel (test tube)

water with indicator (fuchsine or litmus solution)

Procedure:

The apparatus is set up as shown in the following diagram.

The water contains 2 - 3 drops of the indicator. The glass and the funnel can be supported with one hand.

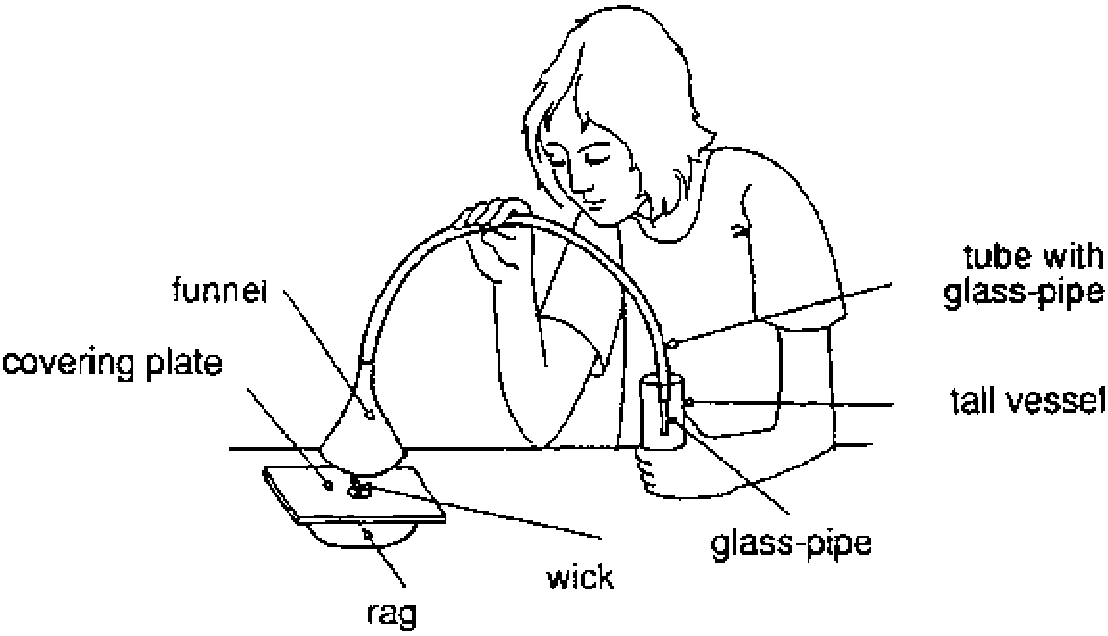

Observation:

Gas bubbles can be observed in the water. The indicator changes colour. The colour change indicates the presence of an acid.

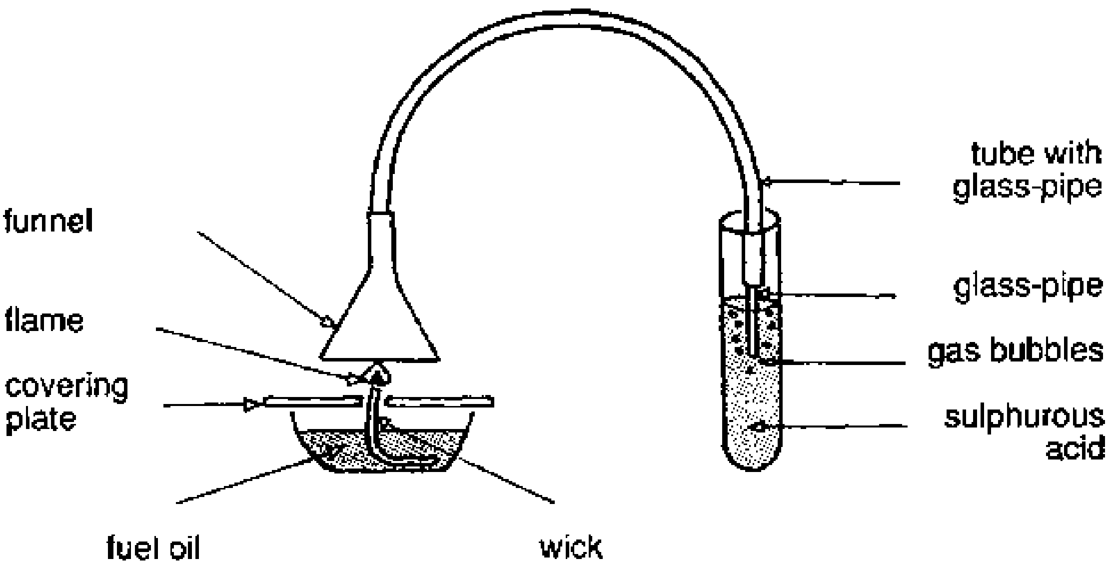

Analysis:

When fuel oil is burnt, the sulphur is oxidized to form sulphur dioxide.

$$S + O_2 \rightarrow SO_2$$

Sulphur dioxide can be easily dissolved in water. Sulphurous acid is formed

$$SO_2 + H_2O \rightarrow H_2SO_3$$

Note: A non-metal oxide and water form an acid.

Practical Meaning:

Sulphur dioxide is one of the components of “acid air”.

When combinated with water, it forms one essential part of “acid rain”.

Sulphur dioxide as well as sulphurous acid demage animate and the inanimate nature. Trees become sick.

It is assumed that what is called “forest die-back” in some industrialized countries might have its origin in acid rain.

(see botany: THE DESTRUCTIVE INFLUENCE OF ACID AIR AND ACID RAIN)

4. ORGANIC CHEMISTRY

4.1. SUGAR CONTAINS CARBON

Main Goal:

Qualitative ultimate analysis.

All matter is made out of atoms, tiny particles that cannot be decomposed anymore by chemical methods. Most matter of our environment, and also our body, is made of compounds the building blocks of which are atoms. There are many different sorts of atoms. Each sort has its typical chemical properties. Matter containing one sort of atoms only is called 'element'. Carbon, hydrogen and oxygen are chemical elements. There are just over 100 known elements.

Information:

Carbohydrates contain the elements carbon, hydrogen, and oxygen. Therefore, its **a** compound.

Some examples of saccharides are grape sugar (glucose), cane sugar, starch, and cellulose.

Within the scope of ultimate analysis, carbon is identified as one of the elements of sugar.

Materials and Apparatus:

glucose or cane sugar
water
about 10 ml of concentrated sulphuric acid
a glass dish which holds about 50 ml or a small beaker

Procedure:

The beaker is filled to a depth of approximately 1 cm with glucose, which is moistened with a few drops of water.

Sulphuric acid is added carefully until the glucose is just covered. (Wear protective goggles.)

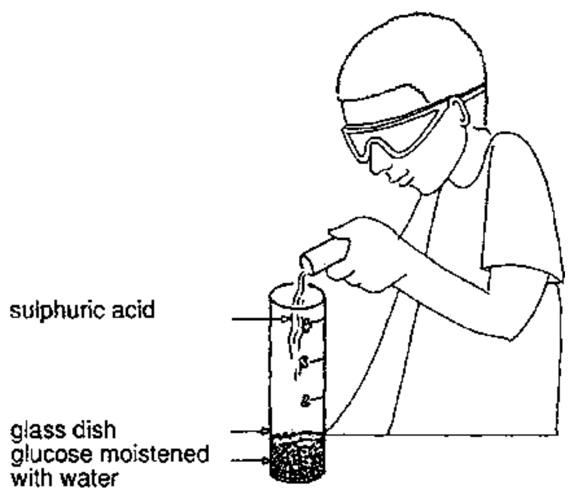

Observation:

A very voluminous black substance is formed.

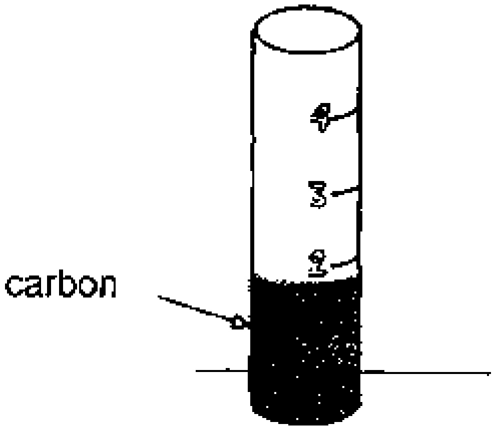

Analysis:

The black substance is carbon.

Concentrated sulphuric acid extracts water from glucose.

Carbon is left as **residue.**

Practical Meaning:

When you burn wood you can observe that it passes a state where it appears black (charcoal). Again, the black substance is carbon.

4.2. PROTEINS CONTAIN NITROGEN

Main Goal:

Qualitative ultimate analysis.

Information:

Proteins are organic compounds containing, among other elements, nitrogen, in particular the so called amino group - NH_2. Proteins are essential parts of animals' food, and also indispensable for mens' nutrition. Within the scope of ultimate analysis, nitrogen can be indirectly identified. When proteins are heated, ammonium gas is formed.

Materials and Apparatus:

hard-boiled egg, chicken protein
moistened litmus paper
test tube or fire-resistant glass dish
test tube holder
burner or candle

Procedure:

About 1 - 2 cm^3 of hard boiled egg white is placed into a test tube.

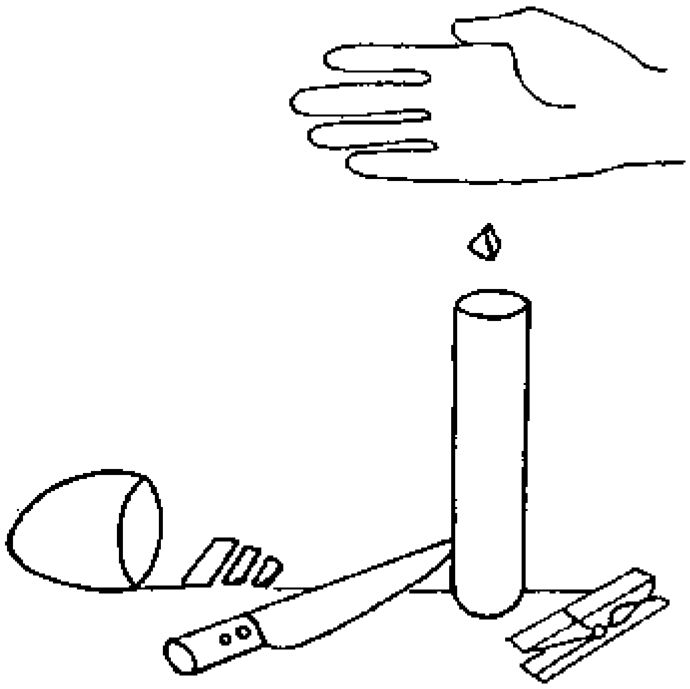

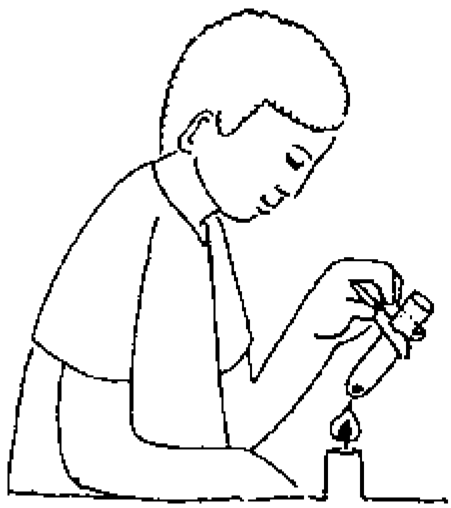

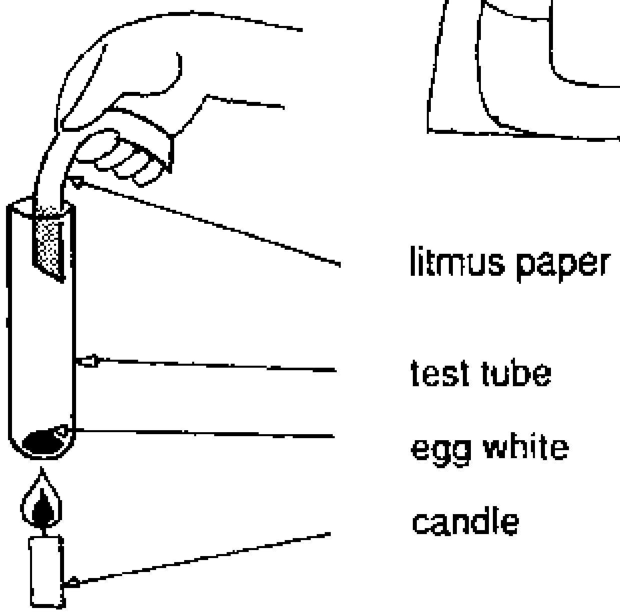

The egg white is heated, and after a few minutes the moistened litmus paper is held in the vapour released.

Observation:

The protein turns black when heated.

The litmus paper changes colour indicating an alkali.

Analysis:

When protein is heated, carbon is left as a black residue.

Protein contains nitrogen. When chicken protein is heated, ammonium gas is set free. It forms ammonium hydroxide if water is added.

Ammonium hydroxide changes the colour of indicators.

Addition:

$NH_3 + H_2O \rightarrow NH_4OH$

4.3. PROTEIN CONTAINS SULPHUR

Main Goal:

Qualitative ultimate analysis.

Information:

Proteins are made up of amino acids. There are two kinds of amino acids which have sulphur in their functional group - cysteine and methionine.

When protein, e.g. chicken protein, is heated, hydrogen sulphide is formed. Sulphur can then be indirectly identified within the scope of ultimate analysis.

Materials and Apparatus:

hard-boiled egg, chicken protein
moistened lead acetate film
test tube or glass dish
test tube holder
burner

Procedure:

About 1 - 2 cm^3 of hard-boiled egg white is placed into a test tube. The egg white is heated, and after a few minutes the moistened lead acetate paper is held in the vapour released

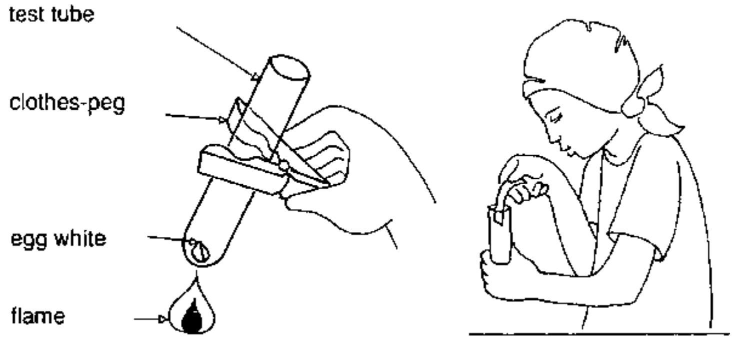

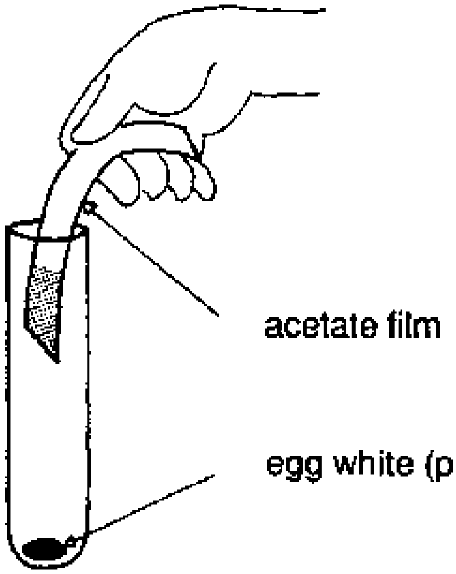

Observation:

The protein turns black when heated.
The white lead acetate turns black.

Analysis:

When protein is heated, carbon is left as black residue.

Chicken protein contains sulphur. When heated, hydrogen sulfide gas is set free. Hydrogen sulfide in combination with lead acetate forms black lead sulfide.

4.4. IDENTIFICATION OF STARCH IN FOOD

Main Goal:

Starch is identified with iodine potassium iodide solution.

Information:

Starch is a polysaccharide and belongs to the class of carbohydrates.

Starch is a vegetable reserve substance, found in grain, potatoes, etc.

Materials and Apparatus:

a. about 0.5 g iodine

1 g of potassium iodide
100 ml distilled water
200 ml brown glass dish which can be tightly closed

b. 1 slice of potato

1 cube of bread

Procedure:

a. The potassium iodide is dissolved in distilled water, and then the iodine is added.

b. Some drops of the iodine potassium iodide solution are dropped on a cube of bread and a slice of potato.

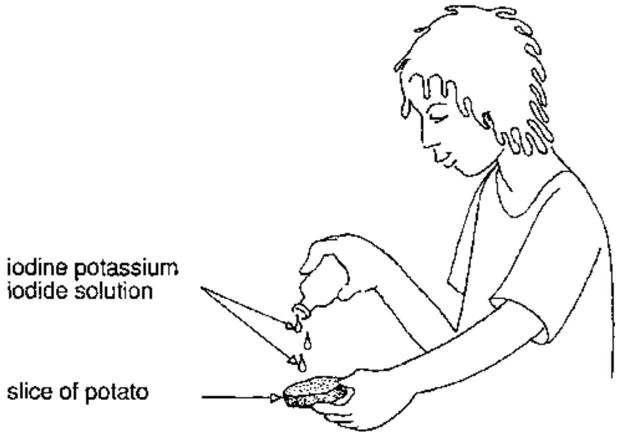

Observation:

The bread and the slice of potato turn a dark blue colour.

Analysis:

The blue colour indicates starch.

Addition:

Starch molecules are coiled in the form of a helix (like a spiral staircase). Iodine molecules accomodate themselves in this starch spiral.

The blue colour is caused by the trapped iodine molecules.

4.5. CARBON DIOXIDE IS PRODUCED DURING THE PROCESS OF FERMENTATION

Main Goal:

The experiment demonstrates alcoholic fermentation.

Information:

The oldest chemical synthesis technique of mankind is fermentation. It is the change which takes place when a saccharine solution is exposed to yeast. The products are alcohol (ethanol), carbon dioxide and heat.

Materials and Apparatus:

freshly pressed apple juice or other fresh fruit juice

yeast (from a bakery)

250 ml glass vessel which can be closed with a rubber stopper

a pierced rubber stopper with a fermentation tube

limewater (CaO is dissolved in water and filtered)

Procedure:

About 100 ml freshly pressed apple juice is poured into a glass vessel. Then 10 - 20 g yeast is added and the vessel is closed with a rubber stopper. The fermentation tube is filled with limewater (see diagram).

If the fermentation does not start immediately the glass vessel should be warmed in a water bath.

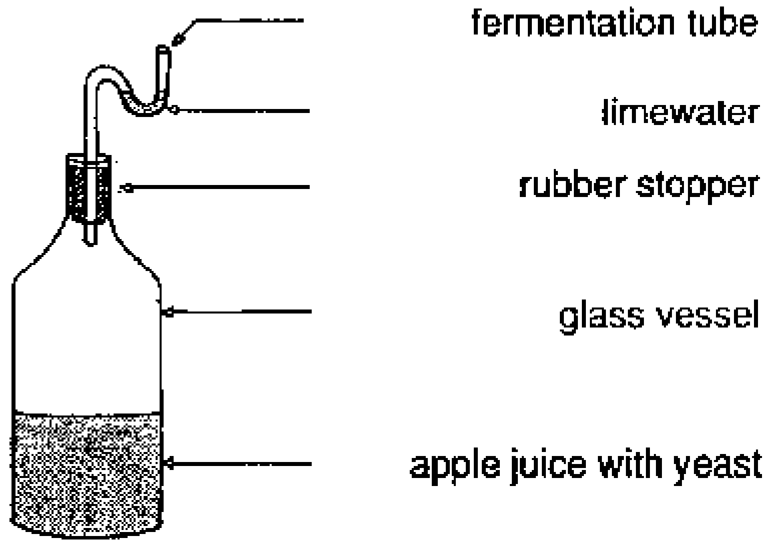

Observation:

After some time gas bubbles form.
The limewater becomes cloudy.
A white precipitate settles.
The glass vessel becomes warmer.

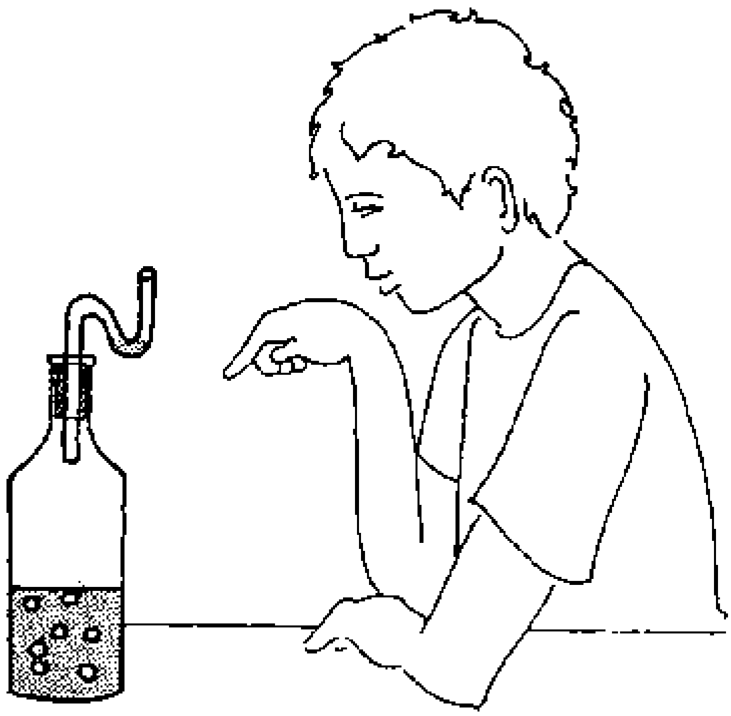

Analysis:

The gas formed is carbon dioxide.

Carbon dioxide and calcium hydroxide form white calcium carbonate.

$$CO_2 + Ca(OH)_2 \rightarrow CaCO_3 + H_2O$$

Addition:

Fermentation vessels are closed with fermentation tubes which usually contain water. One reason for this is to create an anaerobic medium.

In an anaerobic medium more alcohol is produced than in an aerobic one.

Practical Use:

In industry, ethanol is produced in large quantities by alcoholic fermentation.

5. PHASE TRANSITION

5.1. MELTING AND SOLIDIFICATION

Main Goal:

This experiment demonstrates the processes of melting and solidification taking water as an example. Water appears as liquid, vapor and solid (ice). These three modes of appearance are called phases. The transition from one phase to another one is called 'phase transition'. At the melting point solid water changes phase to liquid water. At the freezing point liquid water becomes solid water.

Information:

The melting point and the freezing point, i.e. temperature at which these changes take place, are identical.

These two phase transitions are hardly dependant on air pressure.

Materials and Apparatus:

a. water

dish
refrigerator

b. ice

glass dish
thermometer

Procedure:

a. A little water is poured into a dish and this is then placed in the refrigerator.

b. Some ice is placed in a glass dish, and the temperature is measured as the ice melts (see drawing).

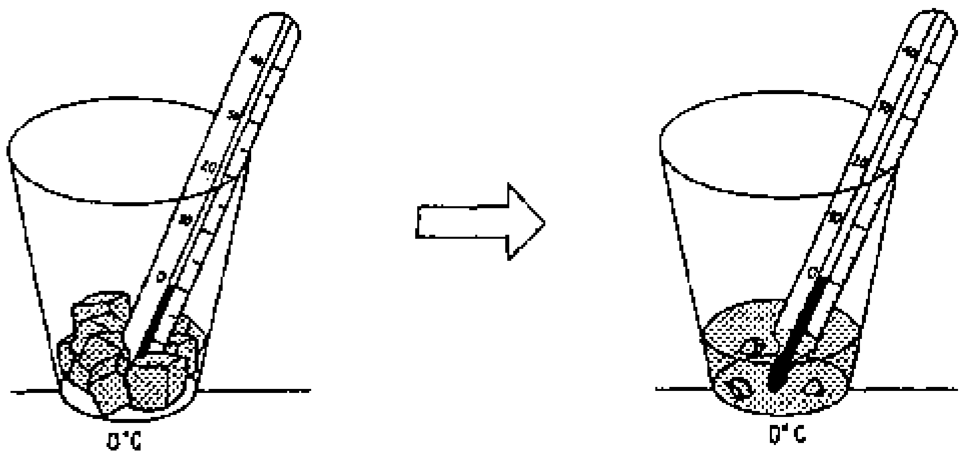

Observation:

a. After some time the water freezes.
b. As long as the ice melts, the temperature remains at 0°C.

Analysis:

The transition from the liquid phase into the solid phase at a particular temperature (point of solidification) is called “solidification”.

The transition from a solid phase into a liquid phase at a given temperature (melting point) is called “melting”.

Thus it is possible to liquefy a solid substance and solidify a liquid.

The melting point (and the freezing point) for water is 0°C.

Practical Use:

The melting point is one means of identifying a material.

Addition:

The melting point of alcohol is - 114° C, its boiling point is 78° C.

For mercury the corresponding data are - 39° C and 357° C.

Further thought:

As long as the ice melts, the temperature remains constant (0° C) in spite of the fact that heat is continually being supplied.

Why does the temperature not rise?

5.2. EVAPORATION AND CONDENSATION

Main Goal:

This experiment illustrates evaporation (boiling) and condensation taking water as an example.

Information:

The boiling point and the condensation point of a pure substance are identical.

These two phase transitions are highly dependent on air pressure.

Condensation comes from the Latin “condensare” meaning to thicken.

Materials and Apparatus:

water
glass or a pot
glass vessel
tripod
burner
thermometer

Procedure:

a. The apparatus is set up as shown in the diagram below.

The water is heated.

The temperature at the boiling point is measured using the thermometer. (The temperature should not be taken at the bottom of the dish).

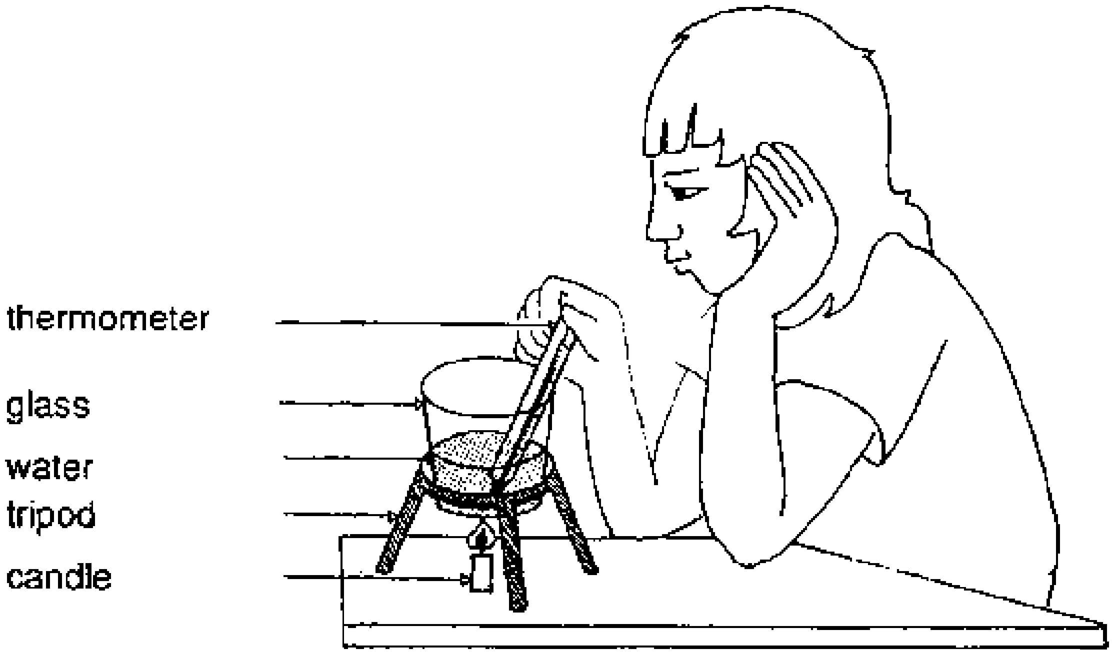

b. Then the second glass vessel is then held in the gaseous water (steam).

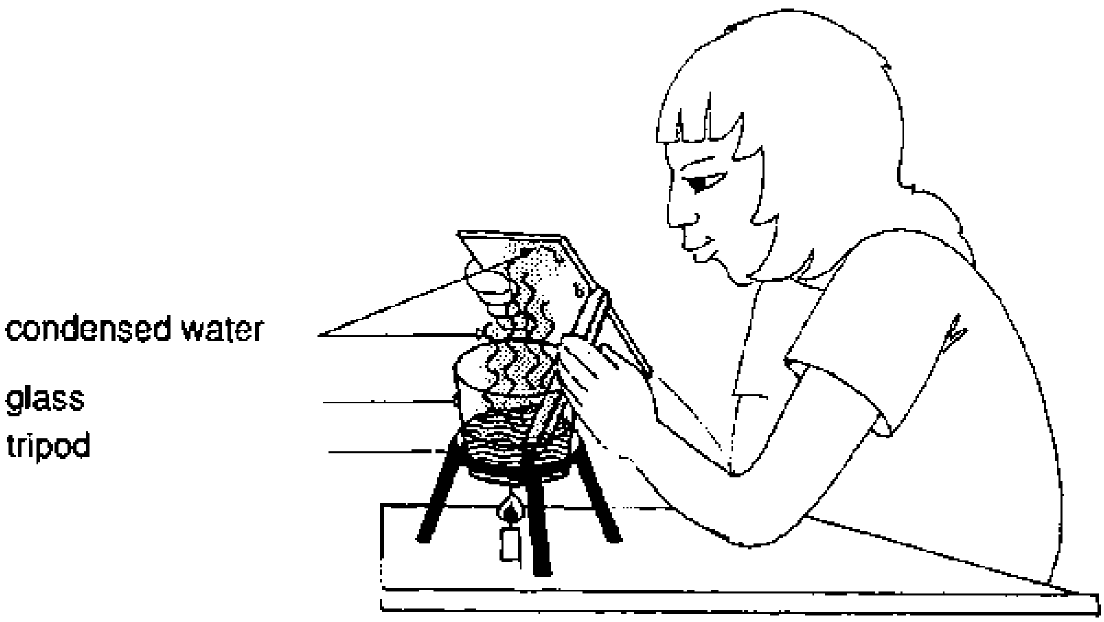

Observation:

a. The water boils at about 100° C (at normal air pressure).
b. Moisture condenses on the second glass vessel.

Analysis:

a. The transition of a liquid to a gas at a certain temperature (the boiling point) is called “evaporation” or “volatilization”.

b. The transition of a gas to a liquid at a certain temperature (condensation point) is called “condensation”.

Practical Use:

Boiling points are a means of identifying substances.

Air is generally loaded with water vapor. If air rises and reaches colder regions, the vapor condenses. Tiny liquid water drops are formed, clouds develop.

Further thought:

A solid must be heated to melt. A liquid must absorb heat to vaporize. Conversely, what must a gas release to liquefy and a liquid to solidify?

5.3. SUBLIMATION AND RESUBLIMATION

Main Goal:

This experiment demonstrates the processes of sublimation and resublimation taking iodine as an example.

Information:

Sublimation is the direct transition of a solid body into a gaseous substance. The reverse process is called resublimation.

Materials and Apparatus:

iodine - some crystals
sand - 2 or 3 teaspoons
porcelain or clay dish
funnel or a cut-off bottle neck
glass vessel - must be cooled in a freezer prior to the experiment
burner or candle
tripod

Procedure:

The iodine crystals are mixed with the sand in the porcelain dish.

The apparatus is set up as shown in the diagram below and heated slowly.

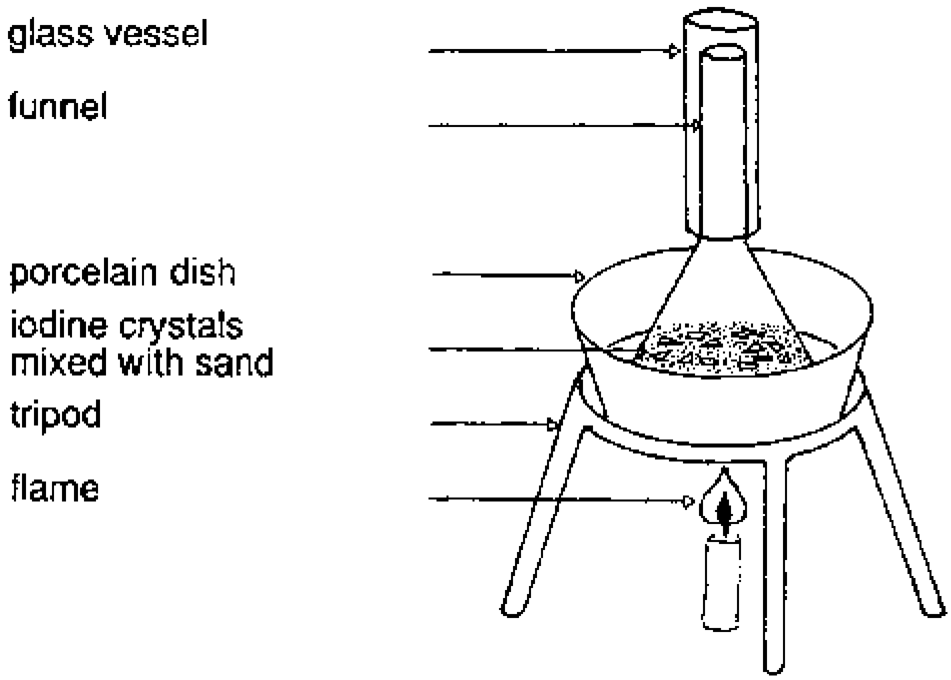

Observation:

Violet vapour appears. The solid iodine becomes a gas without melting. Crystals settle in the glass dish.

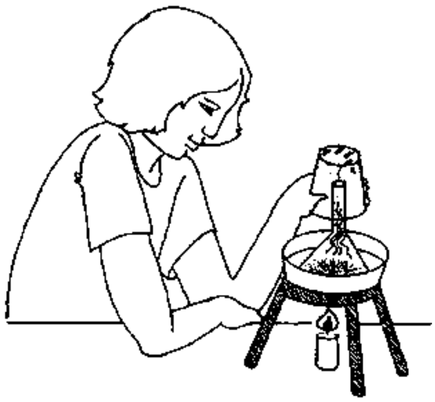

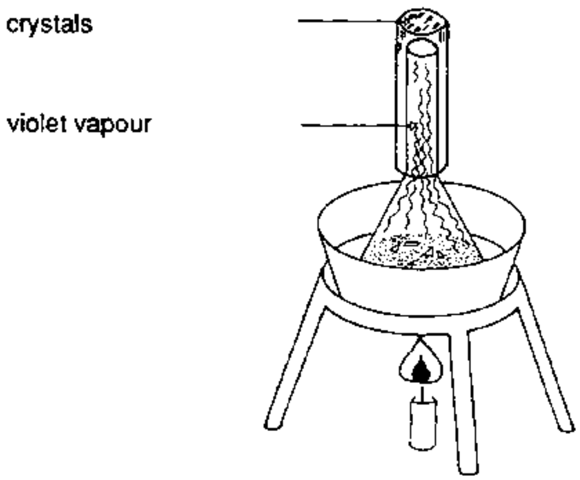

Analysis:

This direct transition of a solid substance to a gas is called “sublimation”.

The direct transition of a gas to a solid condition is called “resublimation”.

Further thought:

So-called “dry ice” (a solid) consists of carbon dioxid. At the open air it undergoes sublimation, and i.e. it changes phase directly from solid to gas. Why then is dry ice used in picnic cooler?

5.4. LAUNDRY DRIES WHEN THE WATER EVAPORATES

Main Goal:

Through the experiment pupils learn why and how liquids evaporate, taking water as an example.

Information:

Even below the boiling point water can become a gas. This process is called evaporation. The pace of water evaporation is dependent on the factors temperature and vapor saturation of the air (among others). Generally air contains water vapor. The concentration of water vapor i.e. the number of grams of water per cubic meter of air, depends on the temperature of the air. If air of a certain temperature contains the maximum possible amount of water vapor we call this air ‘saturated’. The higher the temperature of the air the more water vapor can it contain.

The following experiments illustrate these two interdependent factors.

Materials and Apparatus:

a. 2 dishes of about the same size

1 glass vessel

b. 2 rags of about the same size

(about 15 cm × 15 cm)
water

Procedure:

a. The two dishes are half filled with water. A glass vessel is placed over one of the dishes. The experiment is observed for several days.

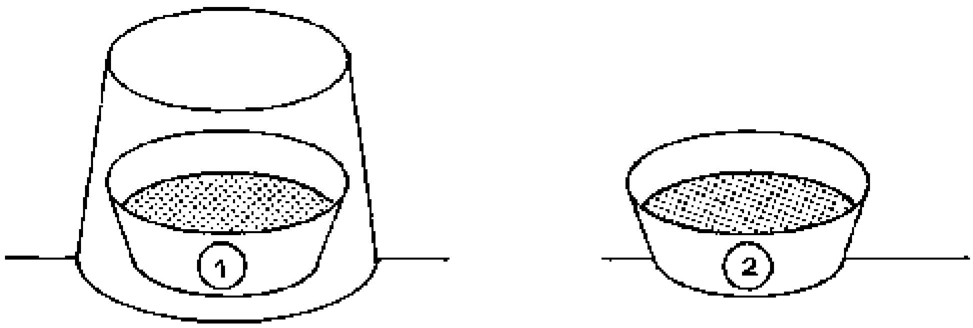

b. The rags are soaked in water. One is dried in the sun and the other one in the shade. The times taken by the rags to dry are compared.

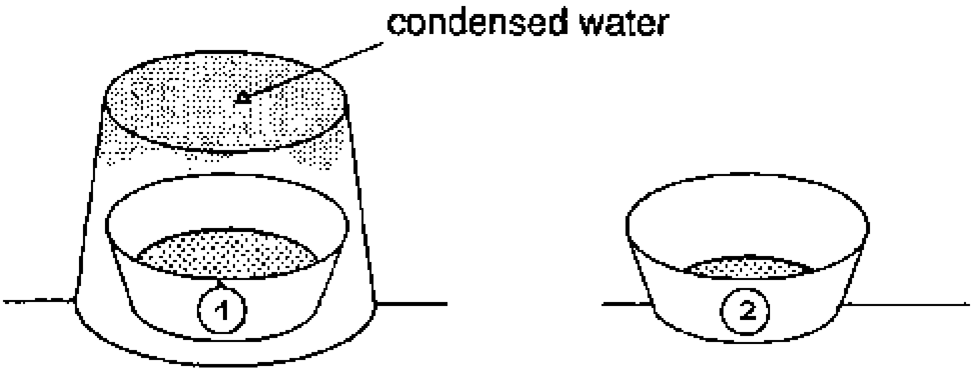

Observation:

a. After a few days (the time depends on the amount of water and the size of the surface) the water in the open dish has completely evaporated. The water in the other dish has only partly evaporated.

b. The rag in the sun dries more quickly than that in the shade.

Analysis:

The ambient air takes in the gaseous water particles to a certain degree until the air becomes 'saturated'. This is why the water from the dish with the cover (experiment a.) evaporates only partially. Water evaporates more rapidly in warm air than in cold air.

An additional air movement, e.g. caused by wind, moves away the air surrounding the wet rags which is saturated with water vapour.

The "dry" air is moved along and the whole process starts again. Thus, the pace of evaporation is increased.

Practical Use:

A technical way of using water evaporation is the process of refining salt (basically sodium chloride) from sea water in warm countries. The sea water is lead into huge basins. The water evaporates, according to the water circulation, with the help of the sun and the wind.

The salts crystallize out and can then be refined (see experiment: CRYSTAL FORMATION).

Further thought:

The cloth covering canteens are moistened when we want to keep the liquid inside cool. Why?

5.5. WATER EVAPORATION - DEPENDANT ON THE SURFACE SIZE

Main Goal:

The experiment demonstrates to what extent the evaporation of water is dependant on the surface size.

Information:

Water also becomes a gas below the boiling point. This process is called evaporation.

(see experiment: LAUDRY DRIES WHEN THE WATER EVAPORATES.)

Materials and Apparatus:

1 glass vessel with a smaller diameter
a tin pan
1 measuring cylinder (scales, measuring vessel)

Procedure:

The same amount of water is placed in each of the three vessels. They are then placed in a sunny spot and observed for several days.

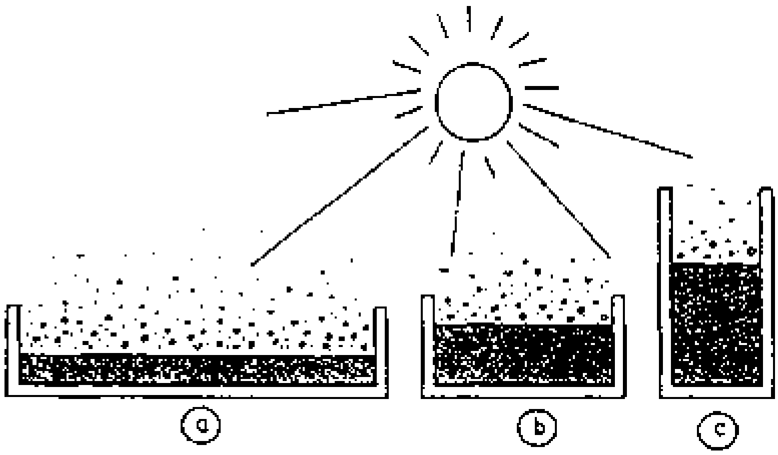

Observation:

The water in the tin pan (a) evaporates faster than that in glass vessel (b). Slowest evaporation takes place in glass vessel (c).

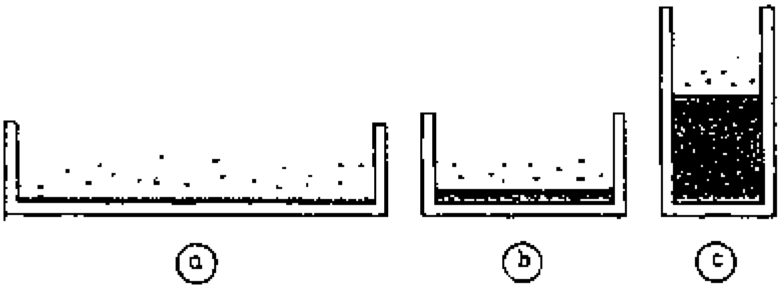

Analysis:

The speed of water evaporation is dependant on the size of the surface. The bigger it is, the more rapid the evaporation.

Practical Use:

see experiment: LAUNDRY DRIES.

Laundry dries faster when the surface of the washing is made as big as possible.

Further thought:

What is the effect when rubbing alcohol is poured on your back?

5.6. WATER EXPANDS WHEN IT SOLIDIFIES

Main Goal:

This experiment illustrates the volume expansion of water when it solidifies.

Information:

Water has its greatest density at 4° C. Above and below this temperature, the density decreases.

The volume expansion of solidified water can be demonstrated impressively by the volume increase undergone by water when it freezes.

This phenomenon, which is a contradiction of accepted, normal laws is called the “density anomaly”. The word anomaly comes from the Greek and Latin word “anomalus” meaning: against the law.

Materials and Apparatus:

a bottle or jar with a screw cap
water which has been boiled and then cooled
freezer
plastic bag, paper
an empty tin

Procedure:

The jar is filled up to the rim with boiled water and the screw cap is tightly closed. Then it is placed in a plastic bag.

The tin is also filled up to 3/4 of its height. The water level is marked.

Both, the bag with the jar and the tin are placed in the freezer for one or two days.

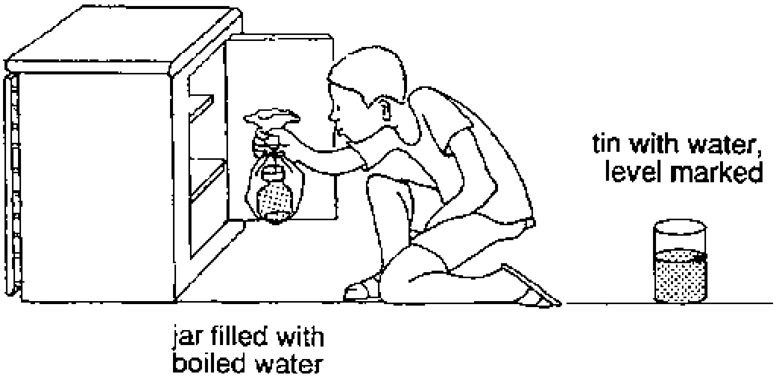

Observation:

The water is frozen, the jar has shattered, the ice in the tin has reached a higher level than the liquid water before.

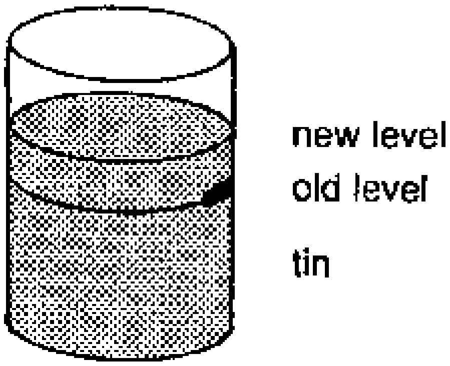

Analysis:

Water expands when it solidifies.

Practical Meaning:

Underground water which freezes causes erosion (from the Latin word “erodere”, meaning to graw off) in the mountains and streets.

Further thought:

When water solidifies, it not only enlarges its volume but also releases heat into the freezer.

What does the freezer do with this heat?

5.7. ICE FLOATS ON TOP OF WATER

Main Goal:

This experiment demonstrates that ice is less dense that water.

Information:

At room temperature, the density of water is approximately 1 g/cm^3 and that of ice about 0.9 g/cm^3.

Materials and Apparatus:

ice cubes (if a refrigerater is not available in your school, go to the next bar and ask for some ice cubes)

water

drinking glass

Procedure:

Some ice cubes are placed in a pan with water.

ice cubes
in a pan

Observation:

The ice floats on the water.

Analysis:

We observe that water expands when it solidifies. This means that 1 cm^3 ice weights less than 1 cm^3 liquid water. The bigger volume of ice has the same mass as the water that becomes ice. Therefore, the density, i.e. the mass (in g) per volume (in cm^3) of ice is smaller than that one of liquid water.

Further thought:

What happens to the water level in the pan (see drawing) when the ice melts?

5.8. ICE MELTS WHEN THE PRESSURE INCREASES

Main Goal:

This experiment demonstrates that ice melts where locally the pressure is increased.

Information:

The freezing point, or rather melting point, slides toward lower temperatures as pressure is increased. This is true of water and of the elements mercury and bismuth. Thus, under high pressure ice melts already at - 5° C or even lower temperatures.

With all other substances the melting or the freezing point is increased by an increase in pressure.

Materials and Apparatus

1 ice block

1 boulder or big brick (about 5 kg)

wire about 30 cm long

10 normal bricks

Procedure:

The experiment is set up as shown in the diagram below.

The experiment takes about half an hour or longer, depending on the thickness of the ice block, and the weight of the weight.

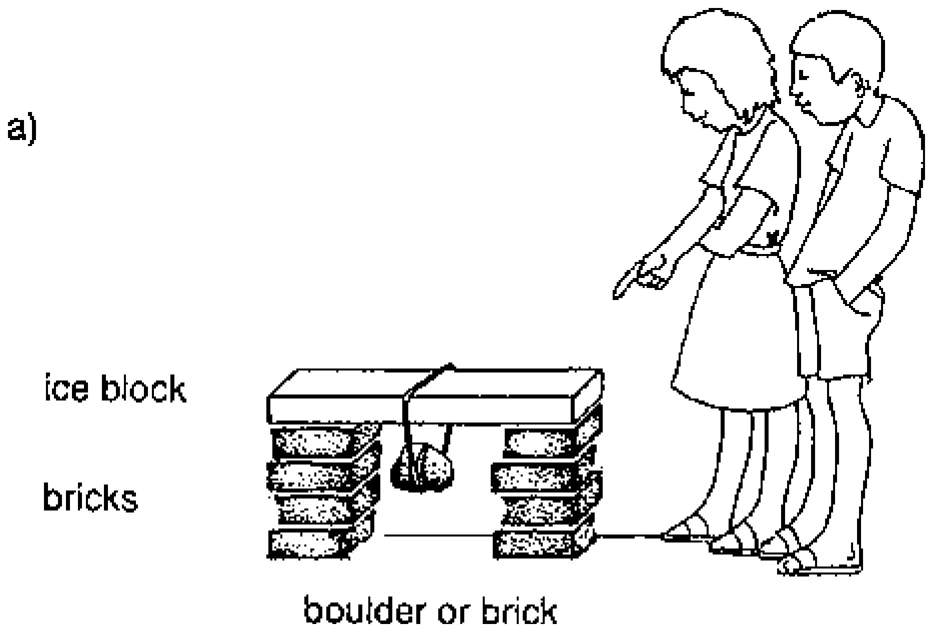

b)

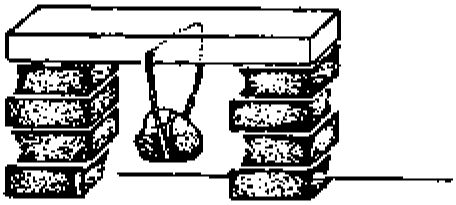

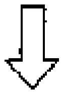

c)

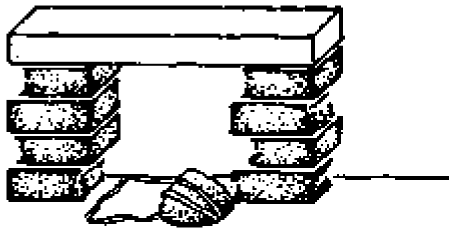

Observation:

The wire moves through the ice block without cutting it into pieces.

Analysis:

The boulder produces pressure along the line of the wire at the upper surface and at the sides of the ice block. The ice melts because of the pressure transmitted to the ice by the wire. Above the wire the ice freezes again. Under increased pressure, water has a lower freezing or melting point.

Practical Meaning:

Ice skating is possible due to the increased pressure which is exerted on the ice through the blade of the ice skate. A water film is created which allows skater to glide.

The movement of glaciers can also be explained by the high pressure which the upper layers of snow or ice exert on the lower ones.

Further thought:

Look at the ice block in drawing c).

It is not quite correct. The wire when pulled though the ice will leave a trace! Why?

6. WARMTH AND COLD

6.1. METALS EXPAND WHEN HEATED

Main Goal:

This experiment demonstrates the expansion of metals when heated.

Information:

Some important properties of metals are malleability, thermal conductivity, expansion when heated and electrical conductivity.

The expansion of metal under the influence of heat is very important. The effect is in particular conspicious for long, tin rods and pipes, which are at high temperatures significantly longer than at low temperatures.

Solid materials do not expand as much as liquids or gases.

Materials and Apparatus:

1 metal sheet (aluminium or copper)
1 coin

alcohol or gas burner,
a candle a pair of tongs
a pair of pliers

Procedure:

An opening is cut into the metal sheet to allow the coin just to to pass when cold. The coin is heated as shown in the diagram below. (The time required depends on the material of which the coin is made.) After heating, attempt to put the heated coin through the opening in the metal sheet.

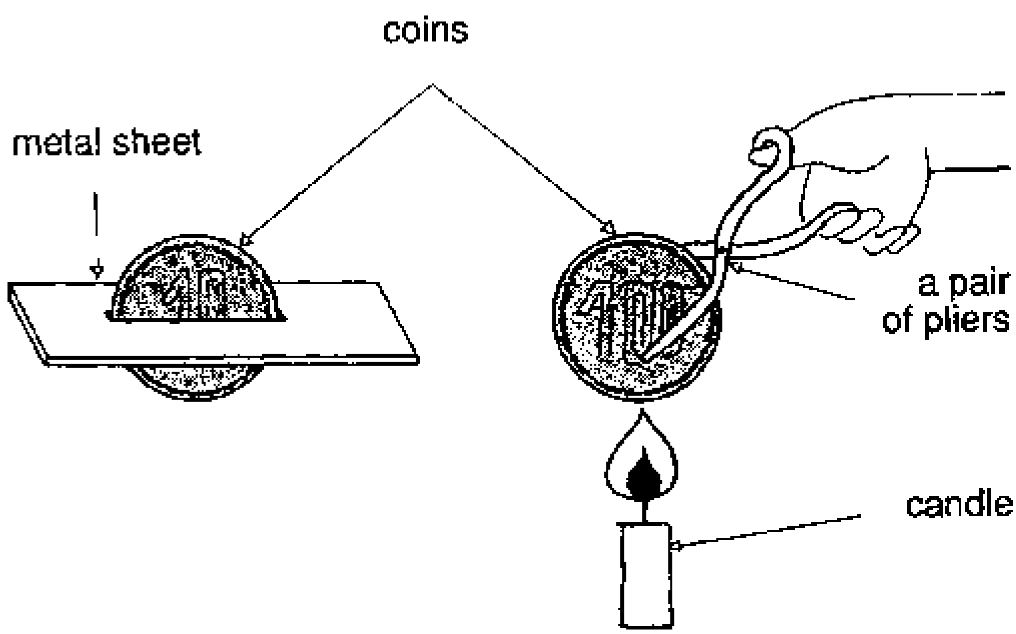

Observation:

The heated coin no longer fits through the opening as before. It jams.

After the coin has cooled down, it fits through the opening again.

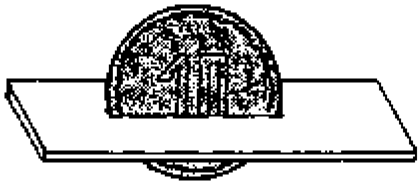

Analysis:

The coin expanded when heated.

Metals expand when heated and contract when cooled down.

Practical Use:

The expansion of metals on heating can be observed in the wires of telegraph lines and transmission lines.

During the summer metal wires sag, whereas in winter they tauten again. When metal wires are laid in summer, they should never be tautened.

In winter small gaps between railway tracks can be observed. These close in summer. The length expansion must be taken into consideration to avoid a deformation of the whole track system. Track sections are often welded together today without leaving seams. Iron tyres are fitted on a wooden wheel after having been heated. When they cool down they contract and tighten on the wood.

Metal bridges are set into concrete only at one side of the bridge, so that they do not bend when they expand. Bimetals take advantage of various kinds of length expansions of different sorts of metals.

(see experiment: THE PRINCIPLE OF A BIMETAL)

Futher thought:

Mercury, under normal conditions, is a liquid. It expands also when heated. The same happens to glass, even if it is not a metal. Many thermometres are made of glass and mercury. Which material expands more with increasing temperature?

6.2. THE THERMAL CONDUCTIVITY OF DIFFERENT KINDS OF MATERIALS

Main Goal:

This experiment shows the good and poor conductivity of various kinds of materials.

Information:

All kinds of substances conduct heat. The degree of heat conductivity is dependent on the material. If the transport of heat takes place in testing substances, it is said to be heat conduction (in contrast to heat streaming due to differences in density).

Materials and Apparatus:

about 20 cm of copper wire, iron wire and glass rod, each one of the same length and with the same diameter

a wooden rack

wood auger

wax

3 candles

Procedure:

The experiment is set up as shown in the following diagram.

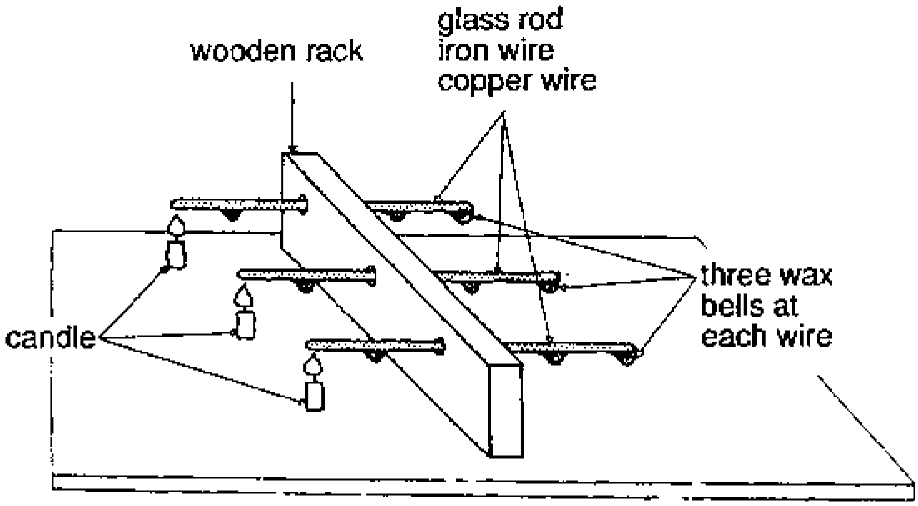

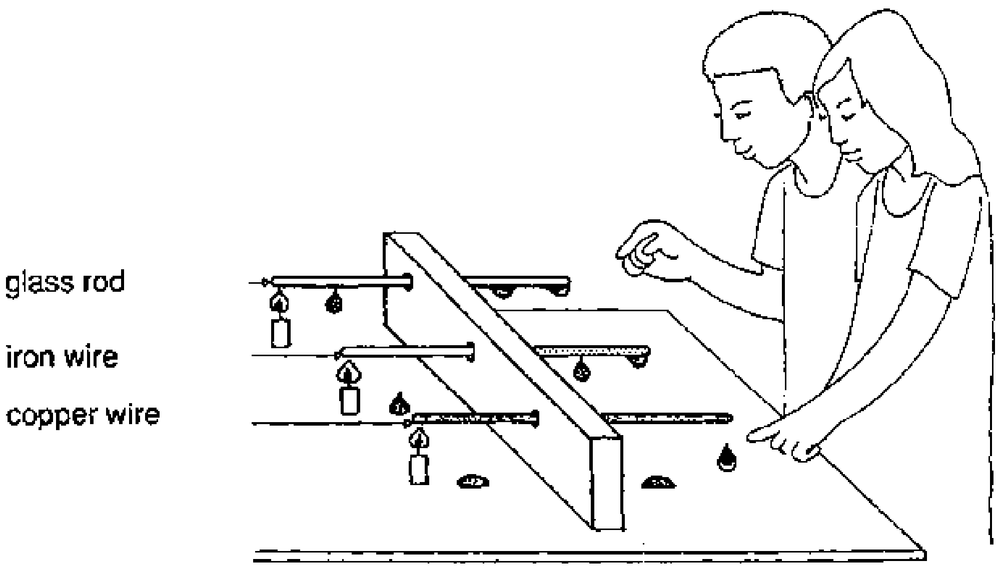

Observation:

First the little wax ball at the end of the copper wire melts and then the one on the iron wire. The one at the end of the glass rod does not drop off.

Analysis:

Heat needs time to go through. The faster the better the conductivity. Glass is a poor heat conductor. Copper is a better one than iron. The heat conductivity is dependant on the material. There are good, mediocre and bad heat conductors.

Practical Use:

Good heat conductivity is taken advantage of in the household, e.g. with pots.

Wood conducts heat much worse than brick.

A house made of wood only warms up slowly, which means, it stays cool in summer. In winter it cools down more slowly than houses made of brick.

(The thickness of the wall and its construction also have to be taken into consideration.)

It is recognized that houses made of brick are built in such a way that the bricks include a lot of air, since air is a poor thermal conductor.

On Cabor Verde, holes are punched into mud blocks and gypsum blocks with the help of bottles and tins. This procedure saves material and is insulating.

Futher thought:

Why is it difficult to estimate the temperature of things by touching them?

6.3. THE THERMAL CONDUCTIVITY OF WATER

Main Goal:

This experiment demonstrates the thermal conductivity of water.

Information:

see experiment: THE THERMAL CONDUCTIVITY OF DIFFERENT KINDS OF MATERIALS.

Materials and Apparatus:

glass tube
cold water
burner or candle

Procedure:

The water is heated in the upper part of the glass tube.

Observation:

The water boils in the upper part of the glass tube.
The bottom of it hardly warms up.

Analysis:

Heated water expands, the density decreases and it becomes leighter (see experiment 6.4). Therefore, it does not sink down.

The water at the bottom of the test tube remains rather cold.

Therefore: Water must be a bad heat conductor.

Further thought:

How can you make this experiment even more dramatic? Think about the usage of ice!

6.4. THE HEAT "STREAMING"

Main Goal:

The experiment demonstrates that the density of water decreases when it is heated.

(The density anomaly of water - highest density at 4° C - is not taken into account.)

Information:

When water is heated, it expands and its density decreases. It becomes lighter (i.e. 1 cm^3 of hot water is lighter than 1 cm^3 of cold water). If heated at the bottom of a beaker the hot water moves upwards. At the surface it cools down. Its density increases and the water sinks. These processes cause a "heat streaming" in water.

“Heat streaming”, (unaided convection, Latin: convehere to bring along), occurs when the density differences are caused by different temperatures.

Materials and Apparatus:

water, ink
sawdust, straw, glass pipe, bamboo pipe
tripod or a similar frame
candle
glass beaker

Procedure:

Ink or another colour is placed at the bottom of the beaker by means of a straw or a glass pipe.

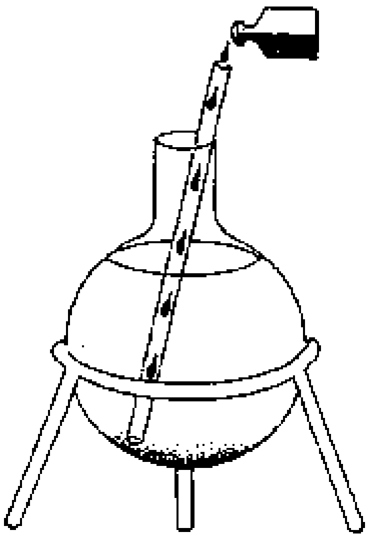

The water is warmed up with the candle at one side of the bottom of the beaker.

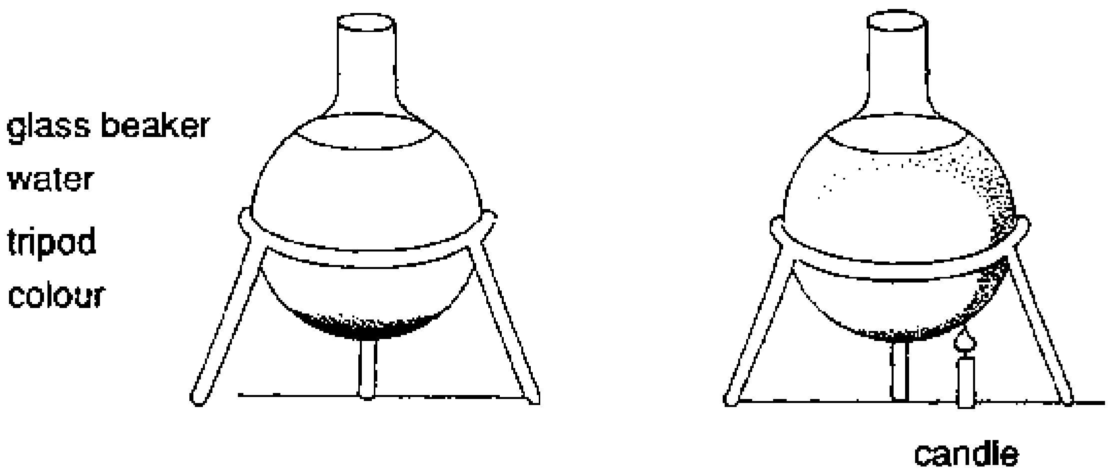

Observation:

The coloured water ascend at the side of the beaker which is heated. At the opposite side the water sinks back to the bottom. After a while it curculates.

Analysis:

The warmed up water ascends and carries the colour with it. The density of heated water is less than that of cold water, which sinks back to the bottom. This "heat streaming" can be observed as long as the water is heated in the way shown.

Practical Use:

This phenomenon is used in warm water heating. In the basement, cold water is warmed up. Warm water ascends into the heating system, cools down and arrives at the boiler over a down-pipe. Today pumps are used to support this cycle.

Furhter thought:

In this experiment not only water is moving! It carries colour and something else. What?

6.5. DENSITY DIFFERENCE BETWEEN WARM AND COLD WATER

Main Goal:

These experiments show that warm water has a lower density than cold water.

Information:

The greatest density of water is at 4° C. Above and below this temperature, the density of water decreases (see experiment: WATER EXPANDS WHEN IT SOLIDIFIES)

Materials and Apparatus:

a. water heated to about 50° C

ink
cold water of about 10° C
2 glass dishes
thermometer

b. water heated to about 50° C

ink
cold water of about 10° C
2 glass dishes
thermometer

Procedure:

a. The warm water is coloured with 1 - 2 drops of ink and then carefully added to the cold water.

b. The cold water is coloured with 1 - 2 drops of ink and then carefully added to the warm water.

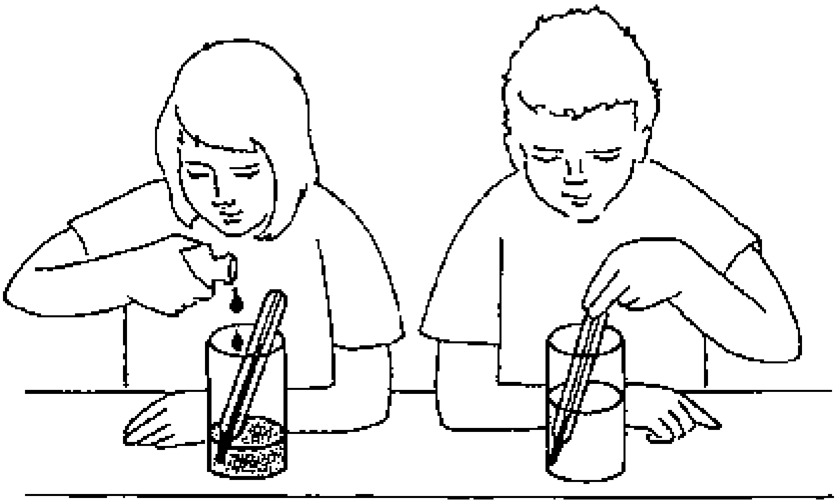

Observation:

a. If added carefully and slowly by means of a glass rod where it 'slides down' to the surface of the cold water, the warm water floats on top of the cold water.

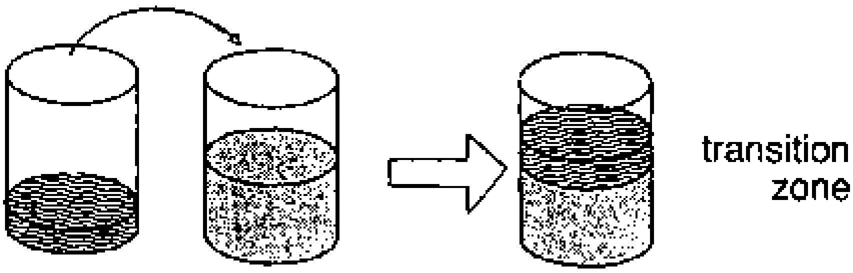

b. Added in the same way to warm water, the cold water sinks more down to the bottom and mixes with the hot water.

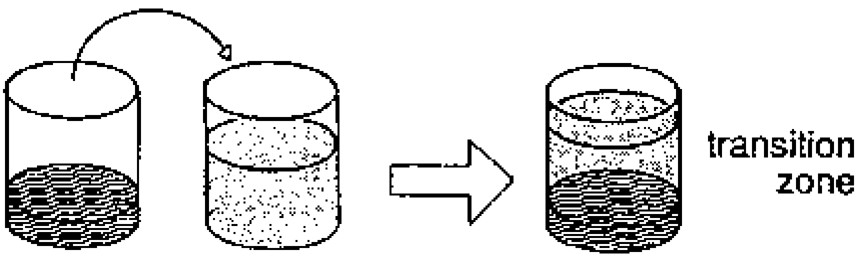

Analysis:

Warm water has a density lower than that of cold water. However this is only true for water above 4° C. Below this temperature, the density of water decreases again. Thus, water of 4° C is 'heaviest'. It has the highest density.

Practical Meaning:

This characteristic of water is important in countries in which the water freezes in winter. On the floors of frozen lakes, the water temperature is 4° C. Therefore, fish and other aquatic animals can survive in the deeper layers of these waters.

Further thought:

Suppose that water is used in a thermometer instead of mercury. Suppose further that it is 4° C. Then temperature changes. The thermometer indicates this change. Is this indication unequivocal?

6.6. HEAT RADIATION

Main Goal:

This experiment illustrates heat transmission by means of heat radiation.

Information:

“Heat radiation” is the name given to a process of transmission of energy, which is not linked with any specific Kind of substance. Sun rays reach earth through space which is void of air. The thermal energy of the sun is transformed into radiant energy and travels in that form through space. When it strikes an object on earth it is retransformed into thermal energy. This is the energy in the object due to the random motion of its molecules. The object, when it has higher temperature than another body or substance in its environment, can loose part of its thermal energy due to flow of heat to the colder body. Therefore, not heat is transmitted in the radiation process but radiant energy.

(see experiment: DARK MATERIALS COOL DOWN FASTER THAN LIGHT ONES)

Materials and Apparatus:

any kind of heating element
(candle, heater, bunsen burner or burning glass and sunlight)

Procedure:

Hands are held at a distance of about 10 - 20 cm from the heating element.

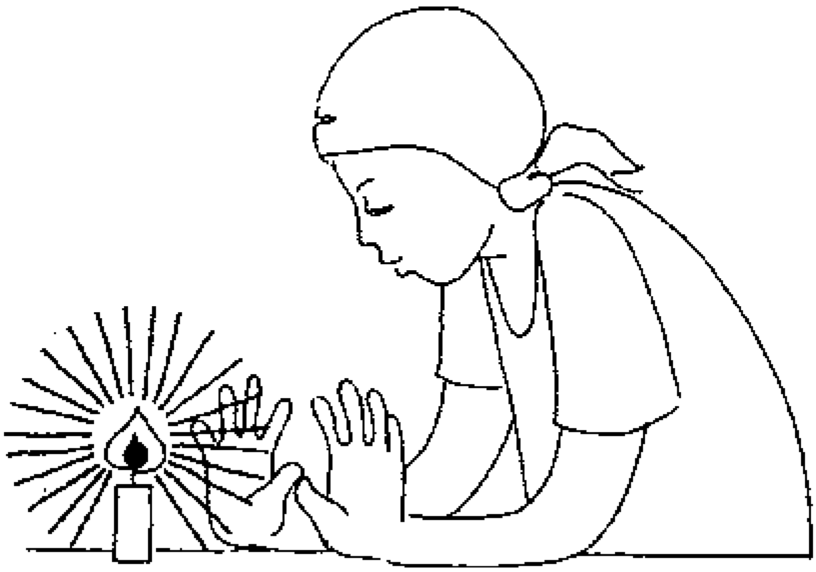

Observation:

A warming sensation is felt on the palms of the hand.

Analysis:

The energy transport hardly takes via heat conduction as air is a poor thermal conductor.

It cannot take place on the basis of heat streaming because warm air rises. The heat transmission in this case is called "heat radiation". Heat radiation is not linked with any specific kind of substance. It needs no medium.

Practical Use:

Every kind of heating element exploits heat radiation (e.g. open fires, ovens, central heating).

With the help of sun collectors, the heat radiation of the sun is harnessed. Sun collectors include, for example black tubes through which water flows.

Further thought:

The composition of the upper atmosphere is changed. It prevents a greater amount of the earth's "heat radiation" from escaping into the space. What are the consequences?

6.7. DARK MATERIALS WARM UP FASTER THAN LIGHT ONES

Main Goal:

Investigation of how different kinds of materials react to heat radiation.

Information:

Light materials reflect (from the Latin "reflectare": to throw back) a greater proportion of heat radiation than dark materials.

Dark ones absorb (from Latin "absorbere": to suck up) a greater amount of this radiation.

Some investigations have shown that rough surfaces absorb more heat radiation than smooth ones.

Materials and Apparatus:

2 thermometers
soot or black paint
white paint candle, a gas burner or similar source of heat

Procedure:

The mercury or coloured alcohol-filled bulb at the bottom of one thermometer is painted black with soot or paint. That of the other thermometer is painted white.

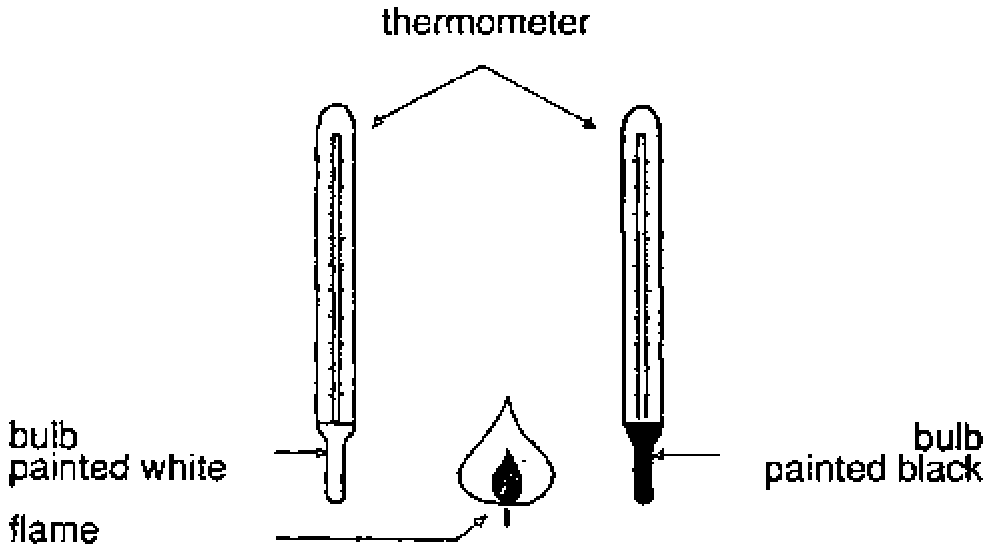

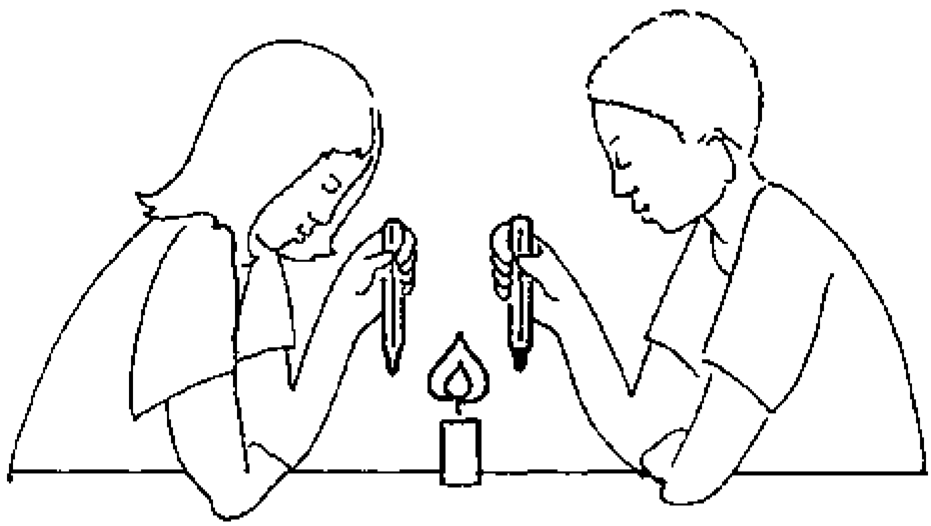

They are held close to some kind of heating unit.

Observation:

After a short time the blackened thermometer indicates a higher temperature than the white one.

Analysis:

Dark materials absorb in the same time and at the same distance from the heat source more heat radiation than light ones. The absorbed heat causes the temperature of the absorbing material to rise.

Light materials reflect the heat radiation better than dark materials.

Practical Use:

Refrigerators, freezers and refrigerator vans almost all have white, smooth surfaces so that heat radiation which hits them is well reflected.

In southern countries houses are painted white.

The people in these countries often wear light coloured clothes.

Sun collectors, for instance black tubes through which water flows, are black.

Further thought:

In countries where there is snow you can lay samples of light and dark cloth on the snow.

What can be observed?

6.8. DARK MATERIALS COOL DOWN FASTER THAN LIGHT ONES

Main Goal:

This experiment demonstrates that dark materials cool down faster than light ones.

Information:

Dark materials emit (from the Latin “emittere”: to send out) heat faster than light ones.

Materials and Apparatus:

2 tins or glasses
2 thermometers

boiling water
a *candle*
soot or black paint
white paint

Procedure:

The outside of the tin is blackened with soot (or with black paint).

The second tin can be painted white although this is not absolutely necessary.

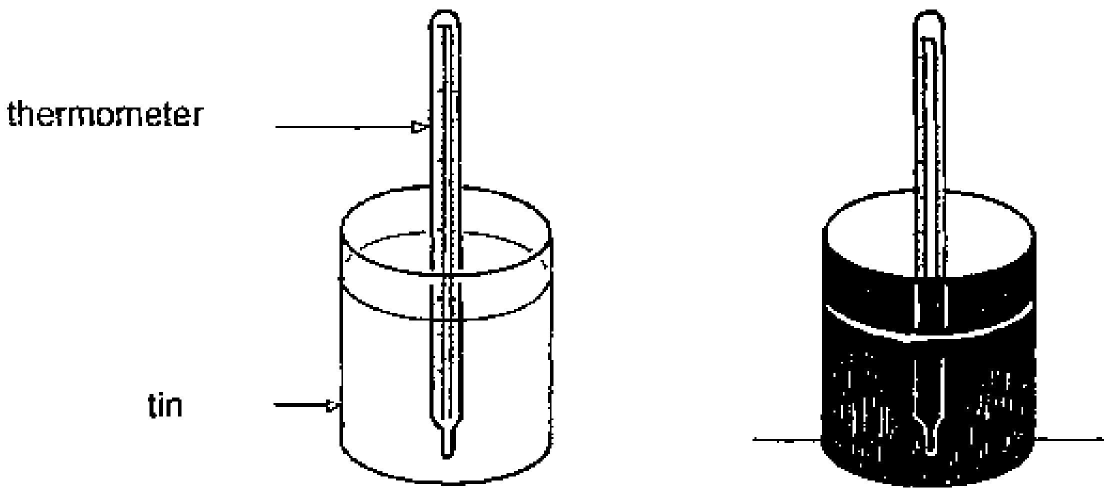

The two tins are filled with boiling water. The temperatures are taken regularly at intervals of 30 seconds or 1 minute. It might be useful to note the temperatures recorded.

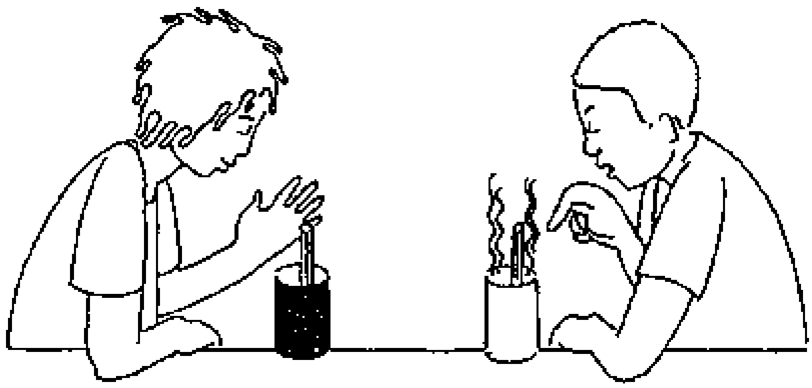

Observation:

The temperature of the black tin drops faster than that of the white one.

Analysis:

Black materials do not retain heat as long as light materials. Black materials emit heat faster than light ones. Thus black materials not only absorb heat better than light ones (see 6.7), but also are better emitters.

Practical Use:

The rays of the sun warm up the dark soil and water in daytime. The dark ground and the water emit heat so that the air warms up. The same amount of heat warms the water less than the ground, because it needs more heat to increase the temperature of 1 kg water than for 1 kg stone or soil.

At the coast it can be observed that the land warms up faster than the sea under the influence of sun radiations. As the air above the land is warmed up more, it ascends and the cooler air above the water streams onto the land. It is the other way round during the night. We perceive this heat streaming in the air as wind. In the daytime the wind blows from the sea onto the land, and during the night from the land to the sea. The degree of heating depends on the angle at which the sun's rays hit the earth and the water. The steeper the angle at which the sun's rays hit the earth, the stronger is the heating effect. This can be explained by the fact that in this case, more rays hit the ground per square metre.

Further thought:

Suppose at a restaurant you get coffee before you are ready to drink it. But you want is hottest when you are ready. When do you add the cream? Right away or when you are ready?

6.9. HEATING WITHOUT A FLAME

Main Goal:

The experiment illustrates the warming up of substances by mechanical work.

Information:

In contrast to heating bodies by heat radiation, conduction or streaming solids, liquids and gases can also be heated if they are mechanically worked on.

Work done in that way that friction force is applied on a body, increases the movement of the atoms the body is made off. This increase of (invisible) microscopic motion appears microscopically as an increase of temperature.

Materials and Apparatus:

a. blackboard or a table
b. air pump

Procedure:

a. Vigorously rub a small spot on the blackboard with one finger. Immediately afterwards, feel this spot and its surroundings with the ball of the other hand.

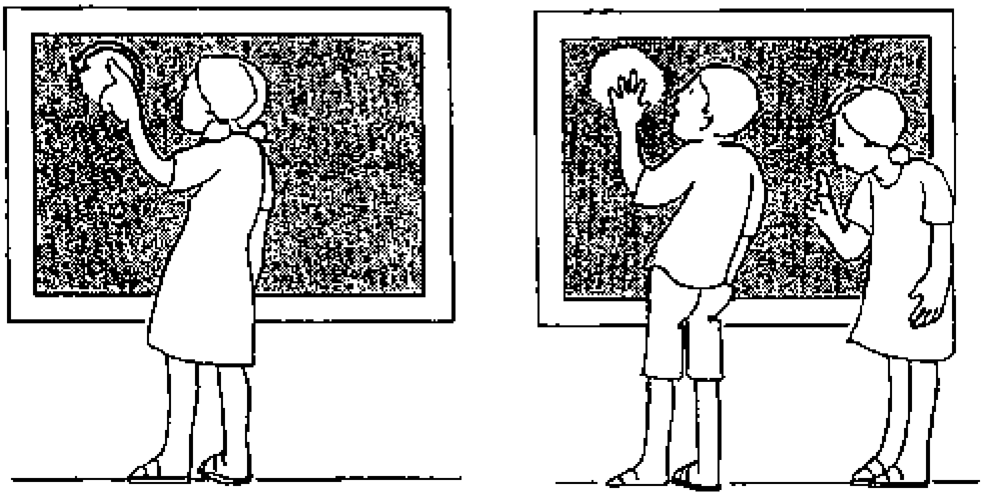

b. The piston of an air pump is pulled out about 15 cm. The valve is closed with one finger. Then the piston is vigorously pushed into the cylinder.

This process should be repeated several times.

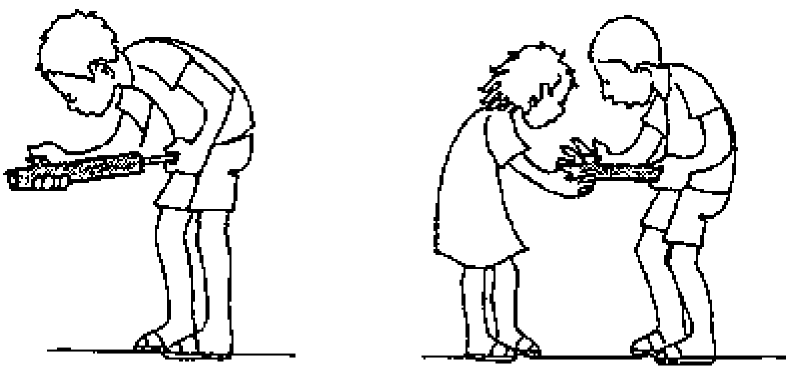

Observation:

a. The blackboard and the fingers become warm.
b. The cylinder is warm - this is also true of the air in the cylinder.

Analysis:

In both cases, mechanical work is done, which increases the movement of the atoms. In the first case this increase is transmitted by friction and in the second case by a pressure increase as well as by friction.

Practical Meaning:

When a spaceship enters the earth’s atmosphere, its cover becomes very hot. The spaceship dives into the air, which presses it together. The strong increase of temperature results from the friction of the air with the spaceship. Friction increases the thermal energy.

If a bucket on a rope is let down into a well quickly, the warming up of the hands can be perceived.

The higher temperature results from the friction of rope and the palms of the hands.

Further thought:

When heat is flowing energy (from hot to cold) and thermal energy is due to random motion of molecules, what then is temperature?

7. AIR

7.1. THE AIR - A BODY

Main Goal:

The experiment demonstrates that air occupies space.

Information:

Air is a mixture of gases whose main components are 78.09% by volume nitrogen, 20.95% by volume oxygen, 0.93% by volume inert gases and 0.03% by volume carbon dioxide.

Materials and Apparatus:

a. dry glass

basin filled with water

b. funnel

pierced cork or rubber stopper
bottle
water

Procedure:

a. As shown in the diagram below, an empty glass is dipped into water, upside down.

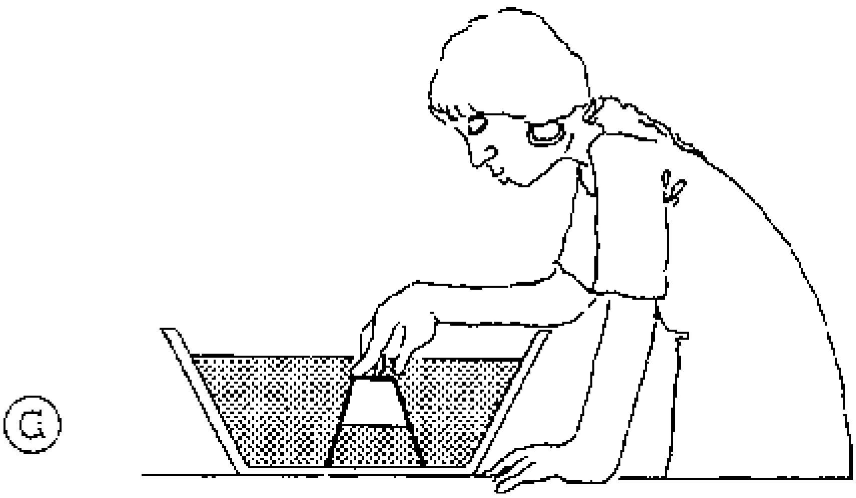

b. The apparatus is set up as shown in the diagram below. The funnel is filled with water, and then the stopper is eased out a little.

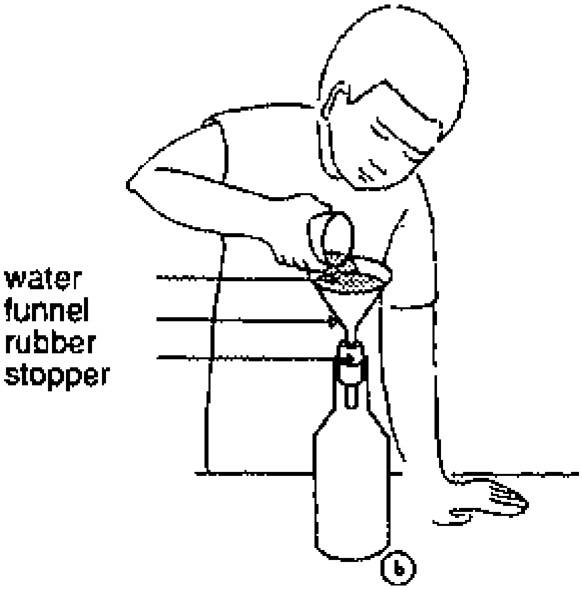

Observation:

a. The water does not completely fill the glass. Part of the glass remains dry (see a).

b. The water flows into the bottle only after the stopper is loosened.

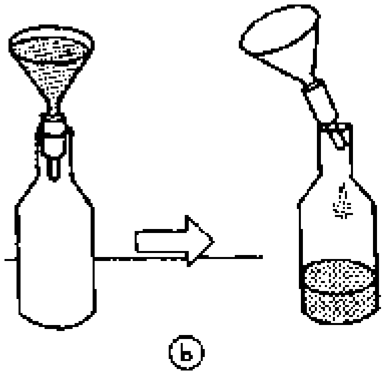

Analysis:

The glass and the bottle both contain air. This space can only be filled with water if the air is compressed or when it can escape. Air occupies space. Thus it is a body.

Futher thought:

Why does a balloon, filled with air, not rise?

7.2. WE FIND OUT ABOUT AIR RESISTANCE

Main Goal:

During this experiment the pupils feel air resistance.

Information:

Air is a mixture of gases. As gases too are bodies, where one body is, no other body can be. If one body wants to occupy the space where another body is situated, this other body must be displaced. Thus, when you occupy a certain space, you dislodge the air from this space. But air as a body, like all other bodies, offer some resistance against your efforts. Sometimes you can feel this drastically.

Materials:

newspapers or large sheets of cardboard

Procedure:

The pupils hold very large newspapers in front of their bodies and run quickly across the school yard or through the classroom. While running, they push the newspaper away from their bodies a few times.

Observation:

The newspaper is pushed against the body. When it is pushed away from the body, the resistance can be felt.

Analysis:

The resistance is caused by your moving against the air. Air consists of gases, which can be visualized as invisible bodies. All bodies offer resistance against their displacement.

Further thought:

It is difficult to breathe when snorkeling at a depth of 1 meter. It is practically impossible at a 2-meter depth. Why?

7.3. AIR RESISTANCE

Main Goal:

This experiment demonstrates air resistance.

Information:

Air consists of a mixture of gases. As gases too are bodies they offer resistance against change of their place.

Materials and Apparatus

1 sheet of paper
1 stopwatch, (or someone must count regularly)
2 cardboards of same size and same thickness

Procedure:

a) From a height of about 1.5 m, a student lets a sheet of paper fall as demonstrated in the following diagram. The time it needs to reach the floor is measured with the stopwatch.

In further experiments, the sheet of paper is gradually folded up until in the final experiment a ball is formed.

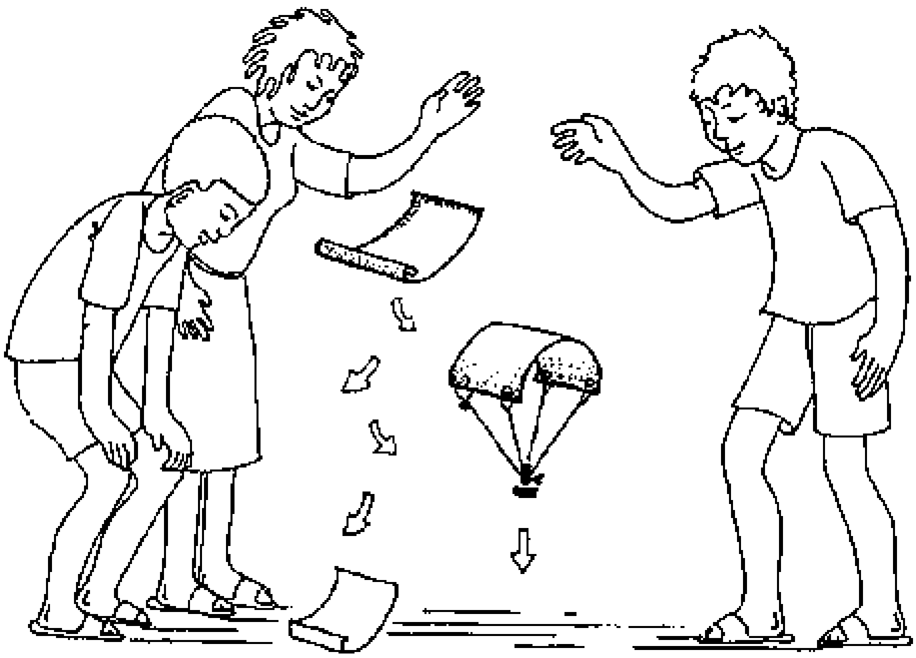

b) Drop the cardboards simultaneously from the same height so that one fells with one edge in front, the other one with a flat side in front.

Which one hits the ground first?

Observation:

a) The smaller the paper is, the faster it falls to the floor.

b) That one with the edge in front hits first.

Analysis:

The smaller the surface that points in the direction of motion, the less air resistance met. From further experiments it is known that the shape of the falling object also plays a role.

Practical Use:

Parachutists take advantage of air resistance. The round shape of a parachute significantly increases the time of falling compared to a flatter shape.

The seeds of plants, which are spread by the wind, are also shaped in such a way that they harness the air resistance.

Addition:

In order to make a parachute, four cords of equal length are fastened to the edges of a square cloth. The ends of the cords are tied together and attached to a moderately heavy screw.

Further thought:

A stone dropped from the top of a tower becomes faster when it falls. A parachutist falls toward the earth with constant speed.

Why this difference?

7.4. THE DIFFUSION OF GASES

Main Goal:

This experiment illustrates the diffusion of gases.

Information:

Gas particles diffuse into even space, no matter how large it is.

Materials and Apparatus:

perfumed substance perhaps a spraycan or an atomizer with mosquito spray, perfume, or a strongly smelling flower or fruit)

vessel

Procedure:

1 - 2 ml of the perfume are placed into the vessel.

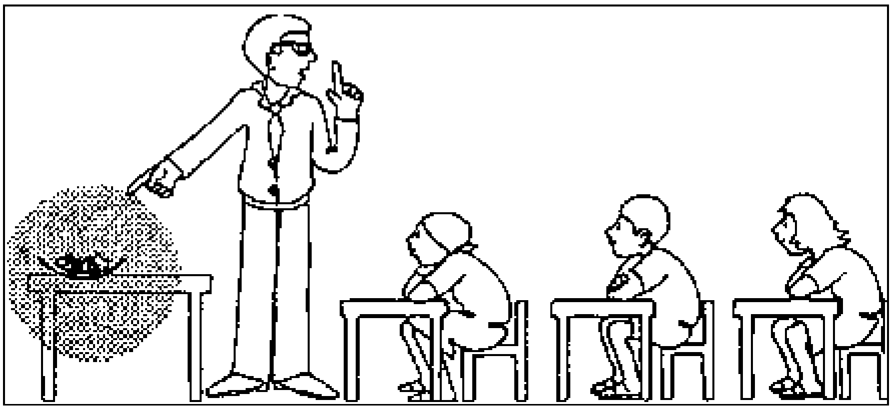

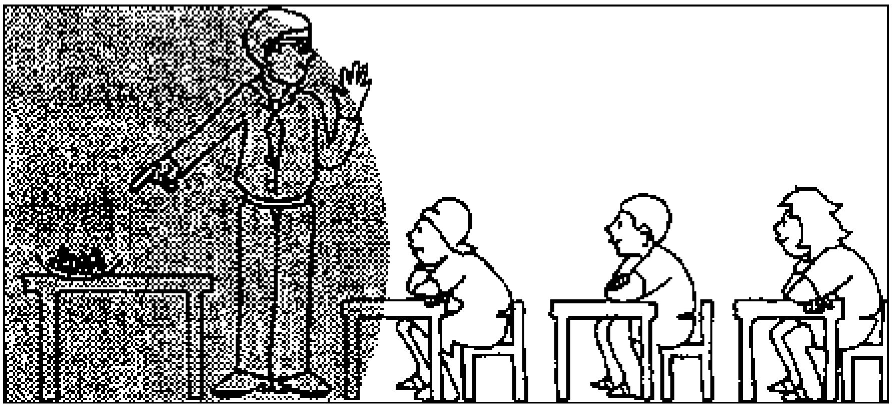

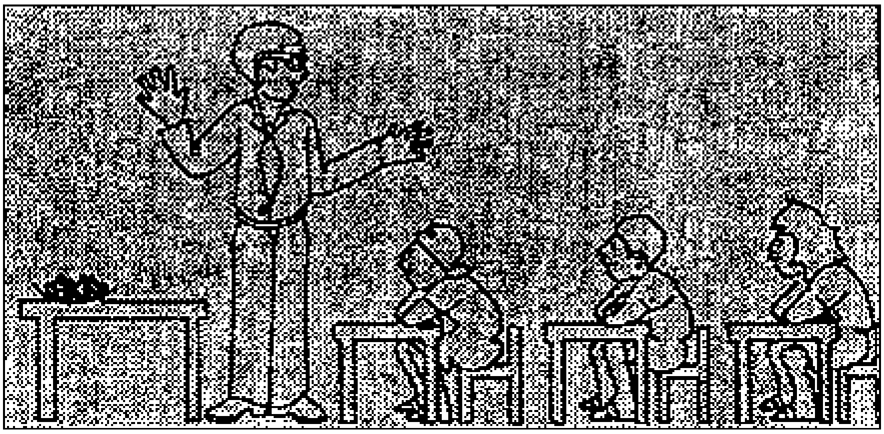

Observation:

After a short time the smell can be detected by pupils sitting near the teacher's desk. A little later also pupils in the following rows of seats smell successively the perfume.

Analysis:

Gases diffuse into each space. This unaided distribution of particles is called diffusion. We cannot see the perfume moving through the classroom. It is said that all bodies, also perfume, is made out of atoms. Therefore, atoms must be very very small.

Further thought:

What changes when you heat the perfume?

7.5. CARBON DIOXIDE IS HEAVIER THAN AIR

Main Goal:

Gases, like solid matter, have different densities.

Information:

When carbon dioxide is produced in **a** vessel, it concentrates first at the bottom of the vessel, as it is heavier than air. Later it completely displaces the air. The carbon dioxide then gradually diffuses evenly. (See experiment: DIFFUSION OF GASES)

Materials and Apparatus:

3 candles
empty bottle, tubing, rubber stopper
Alka Seltzer (or sparkling lemonade)

Procedure:

A glass dish is prepared as shown in the diagram below. Using Alka Seltzer and water, both put into the bottle, carbon dioxide is produced and led into the glass dish. (Or, carbon dioxide from lemonade is conducted through the tubing into the dish. It is also possible to exhale air into the dish through the tube.)

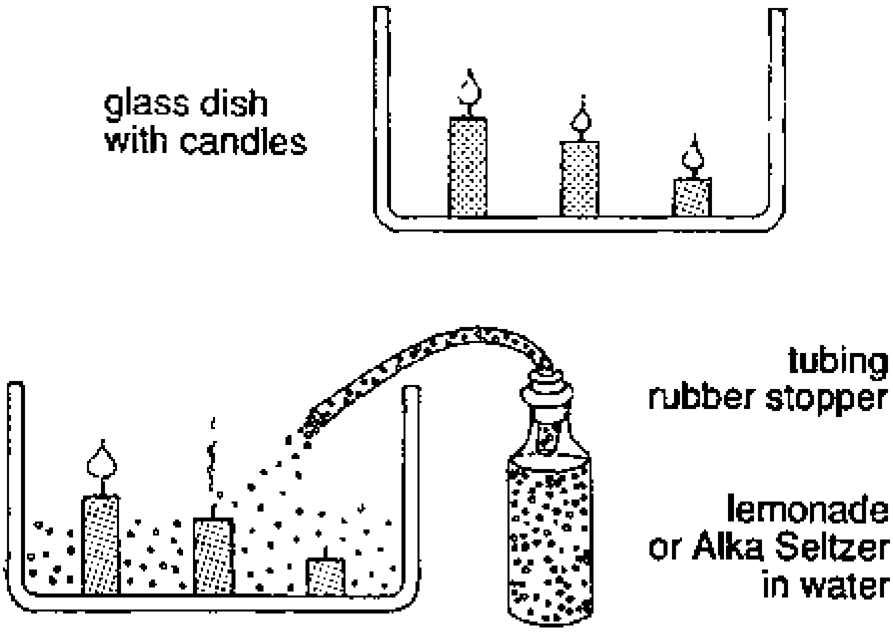

Carbon dioxide from lemonade or Alka Seltzer is conducted through the tubing just to the top of the glass dish.

Observation:

The candles are extinguished one by one because the carbon dioxide sinks down. It is havier than air. (A burning match is extinguished when dipped into the carbon dioxide atmosphere.)

Analysis:

The carbon dioxide is heavier than air and sinks down and concentrates at the bottom of the dish. The more carbon dioxide is produced, the more air is displaced.

Practical Use:

Where it is impossible to use water to extinguish a fire, carbon dioxide is used, e.g. in power stations or in chemical firms. Carbon dioxide leaves no residues and does not conduct electricity.

Human beings and animals breathe in oxygen and exhale carbon dioxide. Plants produce glucose and oxygen from carbon dioxide and light.

Further thought:

The increase of carbon dioxide concentration in air atmosphere has serious consequences (greenhouse effect).

What would be the best ‘biological’ mean against this effect?

7.6. THE PHENOMENON OF AIR PRESSURE

Main Goal:

This experiment demonstrates the consequences of air pressure.

Information:

Air is a body and exerts pressure. The average air pressure is 1 bar. This pressure equals water pressure at a depth of 10 m under the water’s surface.

With increasing height, e.g. in the mountains, the air pressure decreases.

Materials and Apparatus:

glass, paper, water
empty cola can
heater
bowl with cold water

Procedure:

a) Fill a little water into the empty cola can (four tea spoons are enough). Heat that water so that it boils. Let it boil for a minute. Then dip it -upside down - into the cold water in the bowl. Observe the dramatic effect.

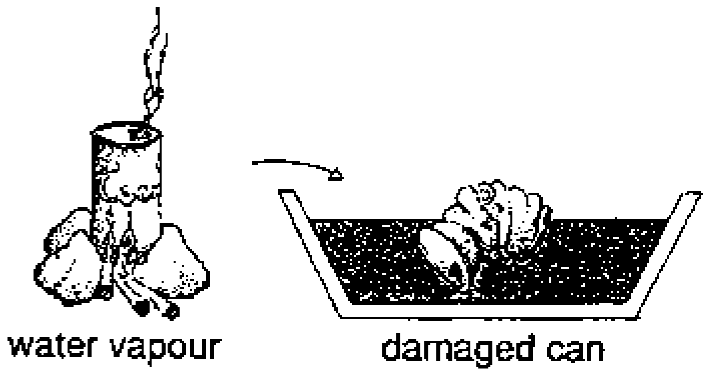

b) The glass is filled up to the rim with water. Then it is covered with the paper, which is pressed down with the palm of the hand. The paper is held tight until the glass has been turned upside down.

Observation:

a) The can is compressed and damaged.

b) From the glass the water does not run out.
(Warning! After a certain time the paper will be soaked through.)

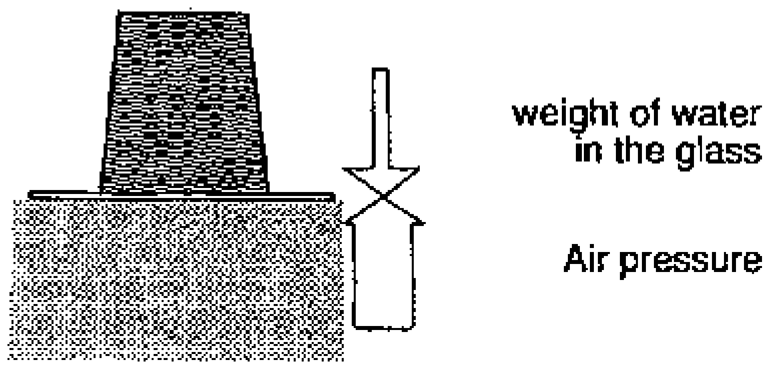

Analysis:

The air in the can is replaced by water vapour. In contact with cold water vapour condenses. Inside the can is suddenly very low pressure, so that the outer air pressure presses the can.

The external air pressure is greater than the pressure exerted by the water in the glass.

Practical Use:

To secure the water supply, pressure and suction pumps can be used.

By means of suction pumps, water can theoretically be sucked up to a height of 10 m. However, in practice it can only be sucked up to **a** height of 8 m, due to the fact that valves are not entirely leaktight.

As there are pipes linked to the pressure pumps, the water is conveyed 10 m high.

Both pumps operate on the principle that, on raising the piston, low pressure is generated.

The air pressure then forces the groundwater into the pump. Repeated pumping movements result in the filling of the pump with water, which flows out through a discharge pipe in the case of a suction pump. In a pressure pump the water is forced into a carrying pipe. Valves, which only open under the pressure of the water in the pump, prevent the water flowing back down the vertical pipe.

Further thought:

Make a small hole near the bottom of an open tin can. Fill it with water. It will spurt from the hole. Cover the top of the can firmly with the palm of your hand. What happens? Why?

7.7. HOW A DRINKING STRAW WORKS

Main Goal:

This experiment demonstrates the practical use of air pressure.

Information:

Air pressure is caused by randomly moving atoms or clusters of atoms (molecules) bouncing randomly against other matter.

Materials and Apparatus:

water or a beverage
a drinking straw
glass

Procedure:

Some water is sipped through the straw.

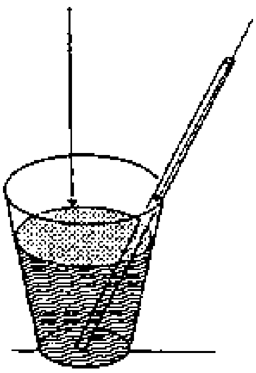

Observation:

see diagram

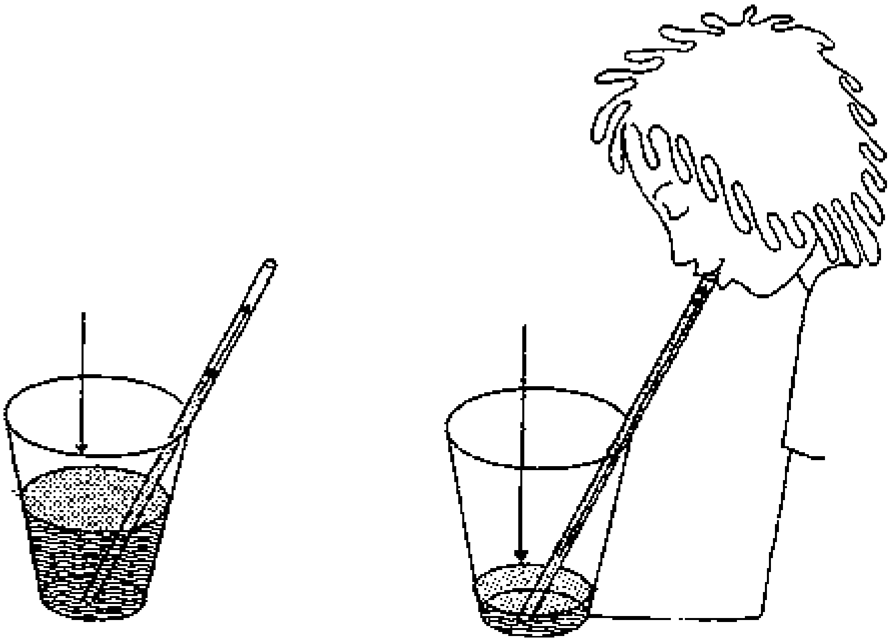

Analysis:

First the air is sucked out of the straw. This creates a space in which the air is rarefied and a space with low pressure is formed.

The ambient air pressure, which is higher, presses on the water surface, forcing the water to rise up the straw. A low pressure region is also formed in the mouth, due to the continual sucking. Therefore the water is always pressed into a space in which the air is rarefied.

(see also experiment: THE PHENOMENON OF AIR PRESSURE)

Strictly speaking, one does not suck the water up the straw. One instead reduce pressure in the straw and allow the pressure of the atmosphere to press the water up into the straw.

Further thought:

On the moon there is no air atmosphere.
Could one drink water this way on the moon?

7.8. THE DANCING COIN

Main Goal:

To demonstrate that gases are bodies which expand when heated.

Information:

Air expands when heated.

Materials and Apparatus:

a bottle - the glass should be very thin
a coin which covers the opening of the bottle.

Procedure:

The rim of the bottle neck is wetted with some water, and the opening covered with a coin. When the bottle neck is grasped with both hands, the air in the bottle expands due to the transmission of heat from the hands to the bottle and from the bottle to the air in the bottle.

The pressure in the bottle becomes higher than the ambient air pressure, so that the coin is lifted up briefly again and again.

(The glass also expands a little.)

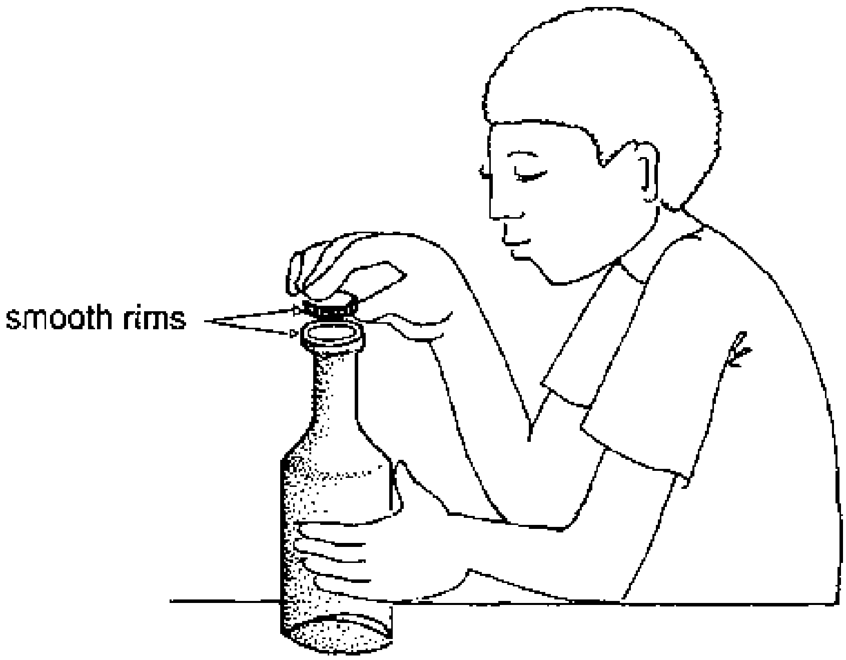

Observation:

The coin “dances” on the bottle neck.

Analysis:

A transfer of heat causes the air in the bottle expand. The pressure increases, lifts the coin, some air escapes and the pressure is reduced for a moment. Then the heat transmission again expands the air, pressure increases and the coin lifts up again, and so on.

Practical Use:

All gases expand when heated. Gas tanks have to be protected against the sun, otherwise they eventually would not be able to withstand the excessive pressure of the expanding gas. Fizzy beverages must be chilled to prevent the escape of the carbon dioxide.

Further thought:

When heat is transferred to the air, also glass explands. Then the volume of the bottle must increase. Doesn’t this just compensate the air expansion? Obviously not. What kind of conclusion can you draw?

7.9. THE BALLOON IN THE BOTTLE

Main Goal:

To demonstrate air pressure, excessive pressure, and vacuum.

Information:

Warmed air enclosed in a certain volume, expands. The pressure increases and some air escapes.

When cooled down and no air from outside is allowed to enter the volume, low pressure is generated inside that volume.

Materials and Apparatus:

1 bottle
1 balloon

paper

Procedure:

A piece of paper is set on fire in a bottle. A balloon is then placed onto the neck of the bottle, immediately the paper is burnt.

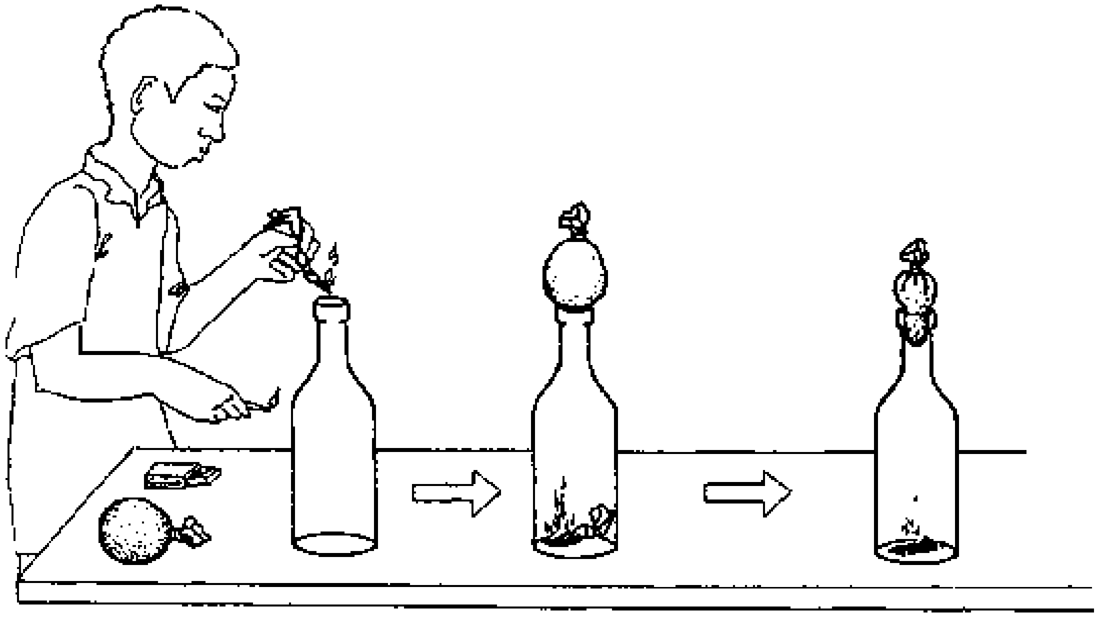

Observation:

see diagram

Analysis:

Due to the burning of the paper, the air in the bottle is warmed and some of it escapes. The balloon closes the bottle opening. As the air inside the bottle cools down, less air is now present in the bottle and lower pressure than outside is created. The air pressure outside of the bottle presses the ballon into the bottle neck.

Further thought:

gas-meter measure the volume of gas you are using.

Who would gain by having gas warmed up before it passes the meter, you or the gas company?

7.10. THE FOUNTAIN EXPERIMENT

Main Goal:

The experiment essentially demonstrates:

- gases are bodies
- gases expand and contract
- the existence of air pressure

Information:

When heated, gases expand much more than solids and liquids. If the pressure remains constant, ideal gases expand when heated by 1/273 of their volume 0° C for every 1 degree they are heated.

When cooled down, they contract to the same extent. In the following experiment, most of the air is expelled from a glass vessel by heating. When it cools down, the remaining gas is under lower pressure. The external, higher air pressure presses the water into the glass vessel, until a pressure balance is created.

Materials and Apparatus:

glass pipe, 20 cm long, which is pointed at one end
pierced stopper (rubber or cork)
glass flask or bottle made of clear glass
glass dish
burner (alcohol or gas burner or a candle)
water (may be coloured with water soluble eosin or ink)

Procedure:

The apparatus is set up as shown in the diagram below. The flask is held at the neck and carefully heated from the side. When there are only a few gas bubbles escaping from the flask, the burner is set aside. The dish is held vertically in such a way that the end of the glass pipe is always submerged.

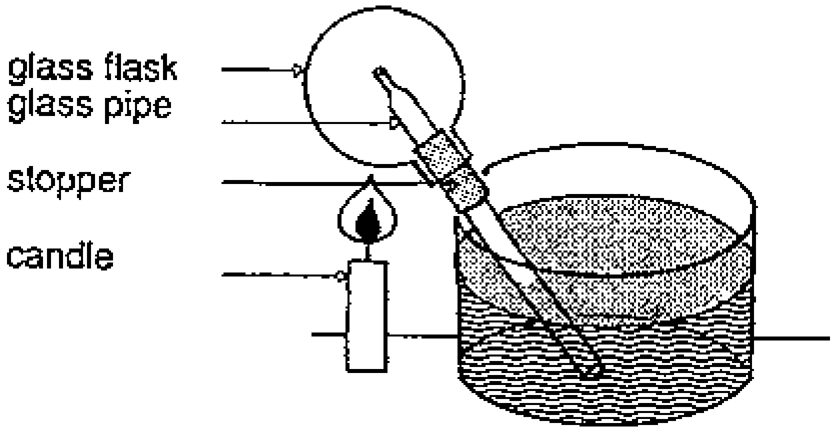

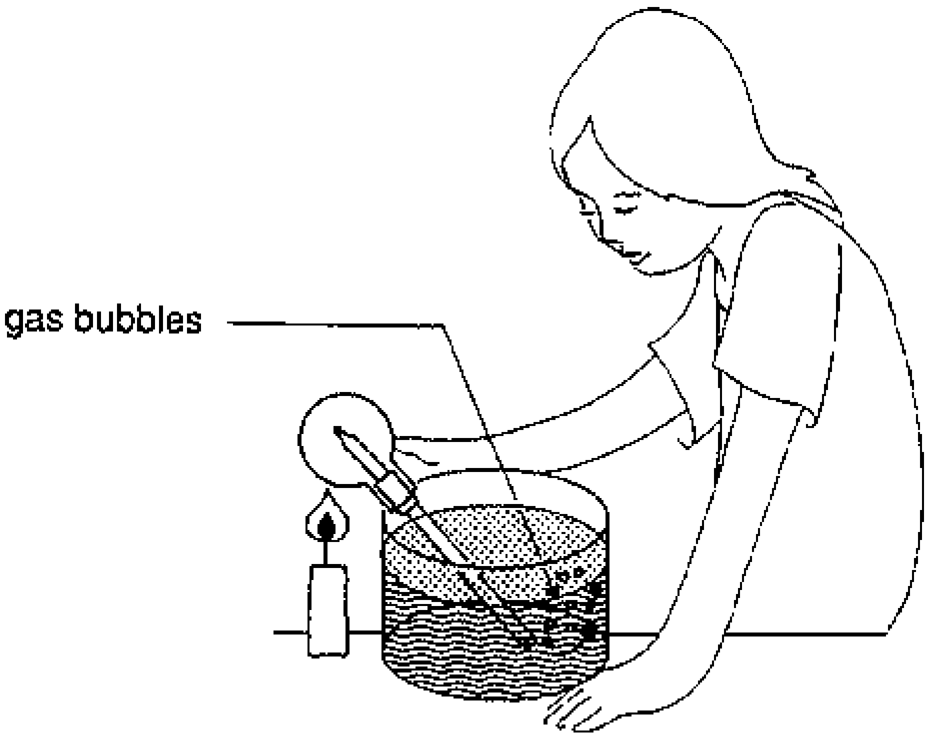

Observation:

When the glass pipe is first heated a large number of gas bubbles escape. The number of gas bubbles decreases gradually. Some time after the burner is removed, water shoots into the flask.

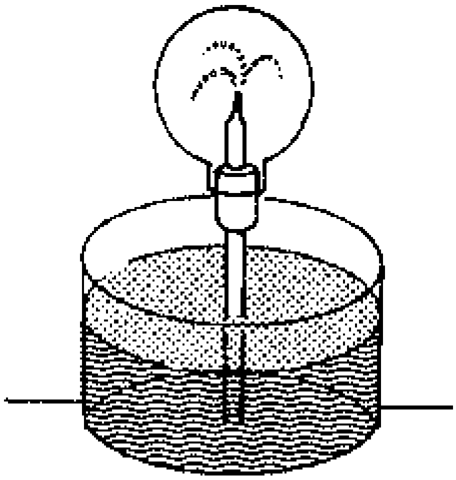

Analysis:

When the glass flask is heated, the air expands greatly and part of it escapes. When the burner is removed, the remaining air in the flask cools down. It's now less air inside which needs under normal temperature less space. The gas contracts, and the outer air pressure presses water into the flask until the pressure inside is equal to the pressure outside.

Practical Use:

Bicycle and car tyres can burst if they are over inflated and then exposed to the sun.

Further thought:

Why do the gas bubbles rise?

7.11. THE PHENOMENON OF AIR FLOW

Main Goal:

This experiment illustrates air flow.

Information:

Warm air ascends in a room, so that the lowest temperature is always found at floor level. Heated air expands. Its density is less than that of cold air, and it therefore ascends into the upper layers. Cold air flows in from the surrounding, is also heated, expands and ascends.

Materials and Apparatus:

thick wire about 20 - 30 cm long
wooden board
a streamer made of thin cardboard
a candle

Procedure:

A spiral shaped streamer is cut out of cardboard.

The experiment is set up as shown in the following diagram.

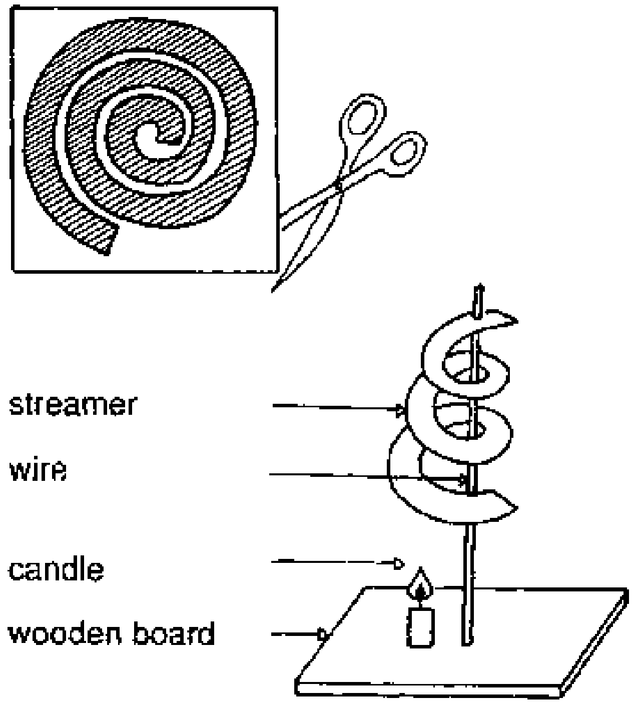

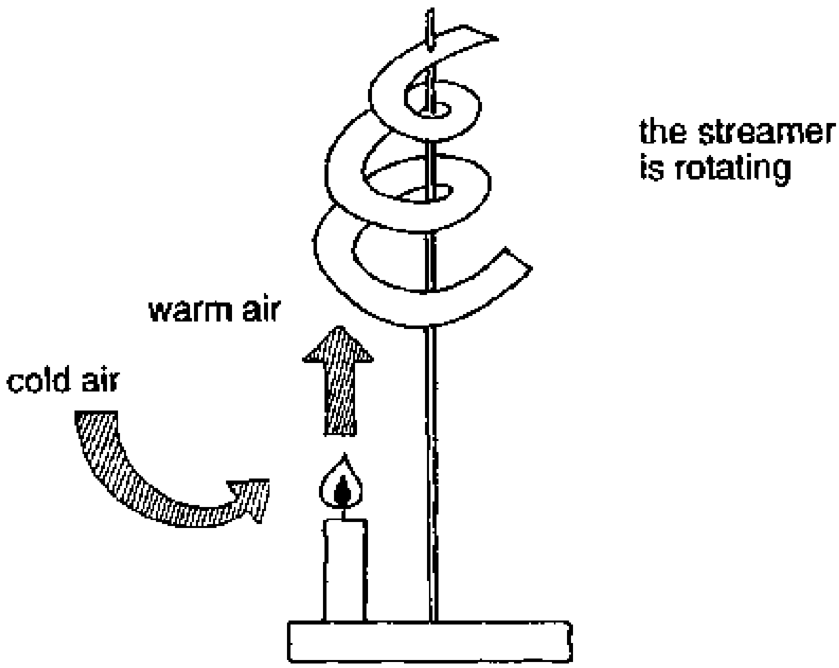

Observation:

The streamer starts rotating.

Analysis:

The candle warms the surrounding air. The warm air ascends and causes the streamer to rotate. Cold air flows in to replace the ascending warm air, is also heated, and the process continues.

Practical Meaning:

When a house burns, the air is heated strongly, and ascends. Cold air containing oxygen flows in very quickly. This effect causes a strong wind. Open doors and windows support this process, which supports the fire.

Further thought:

How can it happen that birds in the air gain height without moving their wings?

7.12. THE AERODYNAMIC PARADOX

Main Goal:

This experiment demonstrates that low pressure is generated by streaming air.

Information:

The aerodynamic paradox it applies also to liquids, where it is called hydrodynamic paradox. It states that, the higher the pace of streaming, the lower the pressure. Consequently, if the pace of streaming increases due to a decrease of the sectional area of a pipe, the pressure within this area decreases.

Materials and Apparatus

2 sheets of paper
2 wooden rods

Procedure:

The paper is placed round the wooden rods as shown in the diagram.

Air is blown, alternately lightly and strongly, between the two sheets.

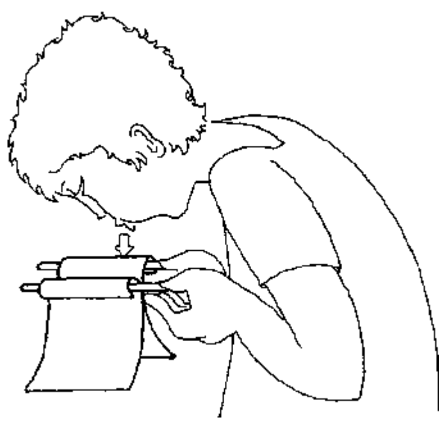

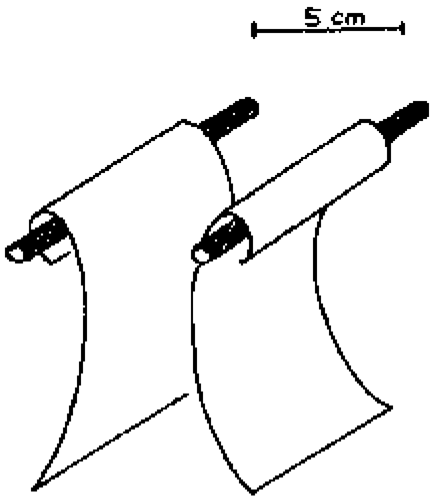

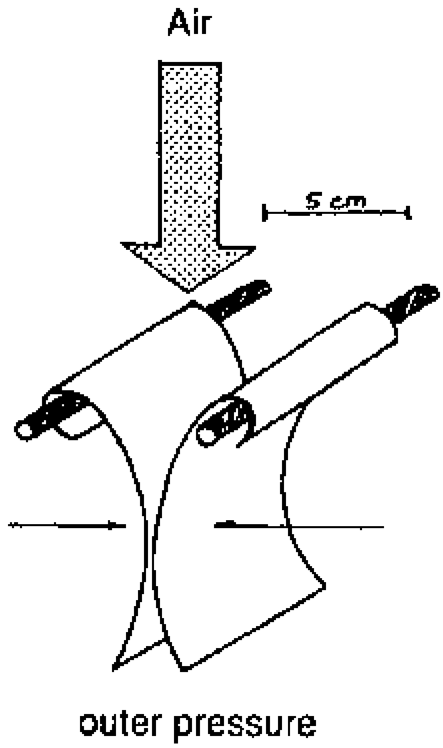

Observation:

Against our intuition the two sheets are drawn towards each other and not apart!

Analysis:

The blown air streams between the two sheets with high pace. An area of low pressure is generated.

The faster the pace of the streaming (the more strongly the air is blown), the lower the pressure in the flow. The normal outer air pressure pushes the sheets together.

Practical Use:

This paradox (it is called paradox because its against our intuition) is harnessed in water jet pumps and in the construction of aeroplane wings.

Further thought:

What is the consequence of this effect with respect to the roofs of houses in case of a strong storm?

7.13. THE BOYLE-MARIOTTE LAW

Main Goal:

This experiment demonstrates the relationship between the volume and pressure of gases.

Information:

If the pressure exerted on a closed gas volume is increased, the volume decreases.

If the pressure exerted on a closed gas volume is decreased, the volume increases. This means that gas always occupies the whole volume available. Moreover, it tends to expand and to enlarge its volume permanently.

The English physisist Boyle (1627 - 1691) and the French physisist Mariotte (1620 - 1684) discovered this association, which is the basis of a law linking the pressure and volume of gases.

The law states that the product of pressure and volume is constant. It is valid only at constant temperatures.

The pressure of gases can be demonstrated with the help of the model of particles: gas particles are in constant motion, and when they collide with an obstacle, they exert pressure.

Materials:

air pump

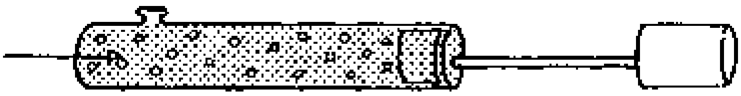

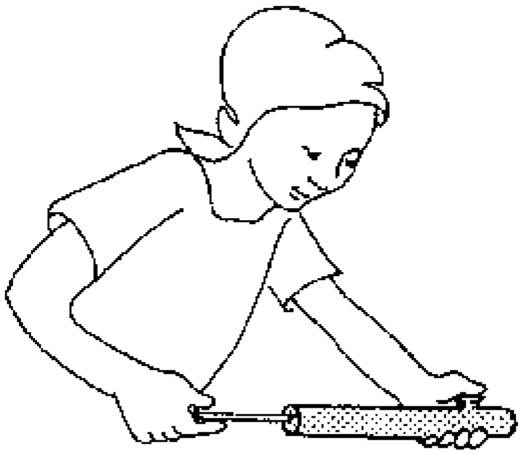

Procedure:

The piston of the air pump is pulled out of the cylinder, and then the valve opening is sealed with one finger. The piston is then pressed as far as possible into the cylinder.

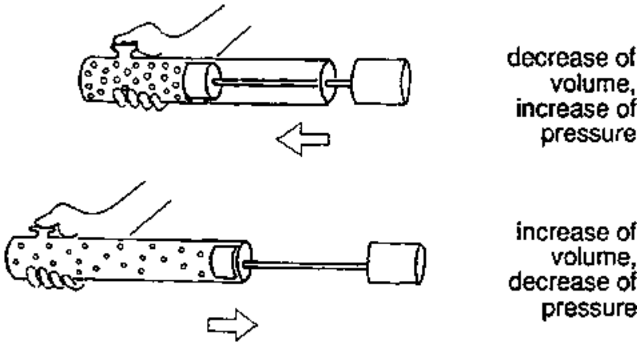

Observation:

Air can be pressed together. The further the piston is pressed into the cylinder, the greater the force required, the greater the pressure of the enclosed air.

The further the piston is pressed into the cylinder, the more quickly it jumps back out when released.

(The air pump and the enclosed air warm up. See experiment: WARMING UP WITHOUT A FLAME)

Therefore, Boyle's Law is not an accurate description of this effect.

Analysis:

If a given gas volume is decreased, its pressure is increased.

If a given gas volume is increased, its pressure is decreased.

Further thought:

Boyle's Law can be written in shorthand notation as a formula

$$p_1 \times V_1 = p_2 \times V_2 = \text{const.}$$

(p = pressure, V = volume

There are other laws in physics that have the same structure, e.g. the Law of Lever. Compare!

7.14. MOVING FORWARD BY REPULSION

Main Goal:

This experiment demonstrates the phenomenon of repulsion.

Information:

Air which escapes from an narrow orifice produces a repulsion.

Two forces always come into play: one in the direction of the streaming, the other in the opposite direction.

Materials:

1 balloon

Procedure:

The ballon is completely blown up.

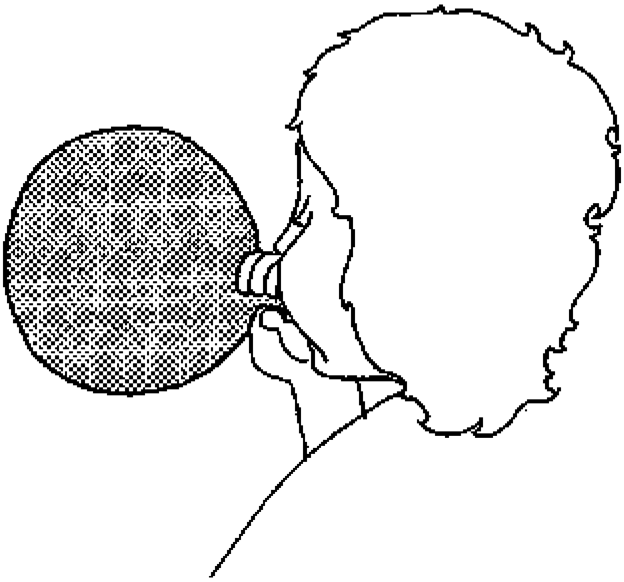

Its opening is first held closed, and then the balloon is released.

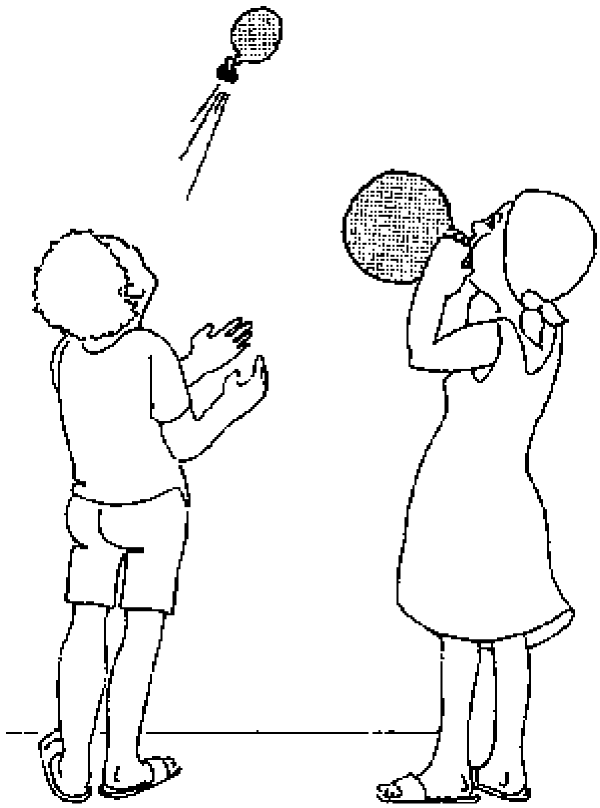

Observation:

The balloon moves around jerkily. First it flies upwards, and then it moves uncontrolled through the room. The excaping air hisses.

Analysis:

The balloon moves because of the repulsion, in the opposite direction to the

excaping air. One force in the direction of streaming. This force stems from the tension of the rubber of the balloon. It pushes the air through the orifice. On the other hand: the air pushes back and causes the balloon to move in the opposite direction. The two forces are equally strong.

Practical Use:

Jets and rockets move forward due to this principle of repulsion. They are driven forward by combustion gases escaping rapidly.

Further thought:

What happens to a boat when you jump out of it?

8. WATER

8.1. MODEL OF A WATER-PIPELINE

Main Goal:

The same air pressure acting on the surfaces of a liquid in joint vessels which are opened at the tops causes them to lie at the same level, (exceptions are very narrow vessels because of capillarity.) This principle is applied in water-pipes in technology. (Ground water is pumped into a water-storage tank such as a water-tower. The storage tank must be higher than the taps.)

Materials and Apparatus:

funnels or bottles from which the bottoms are cut off
(use caution!) or glass-pipes tubing
2 nails
hammer
rope
water

Procedure:

As demonstrated in the following diagram, the principle of a water-pipeline is illustrated.

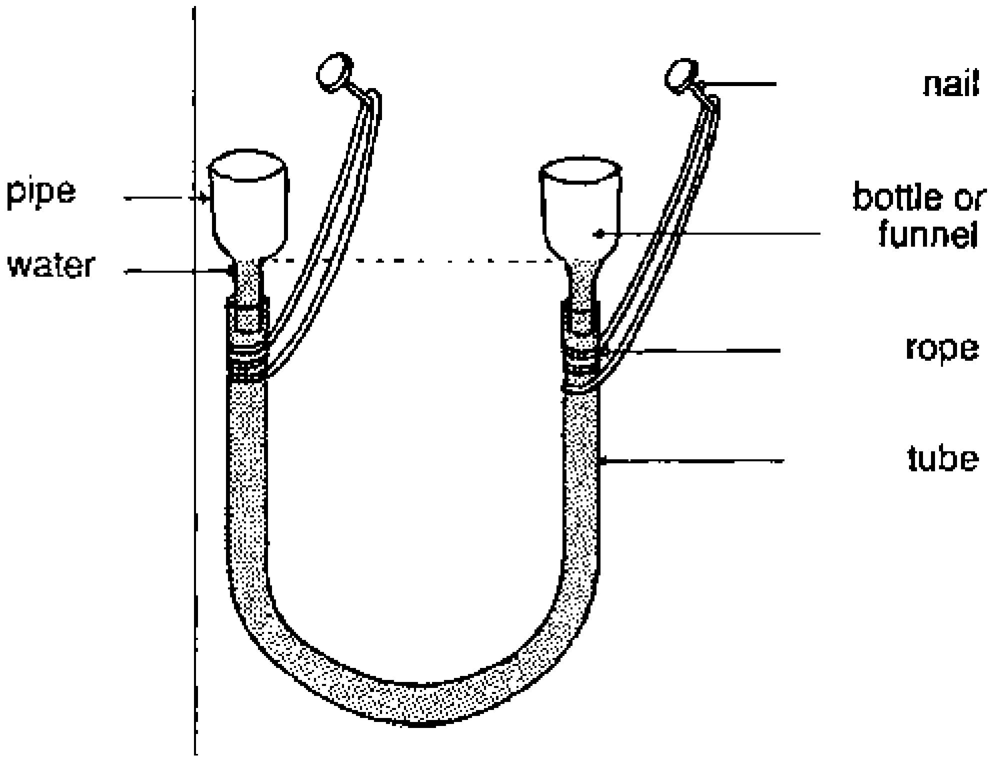

The bottles (or the funnels) are alternately lifted and lowered. In the beginning, the two water surfaces lie at the same level.

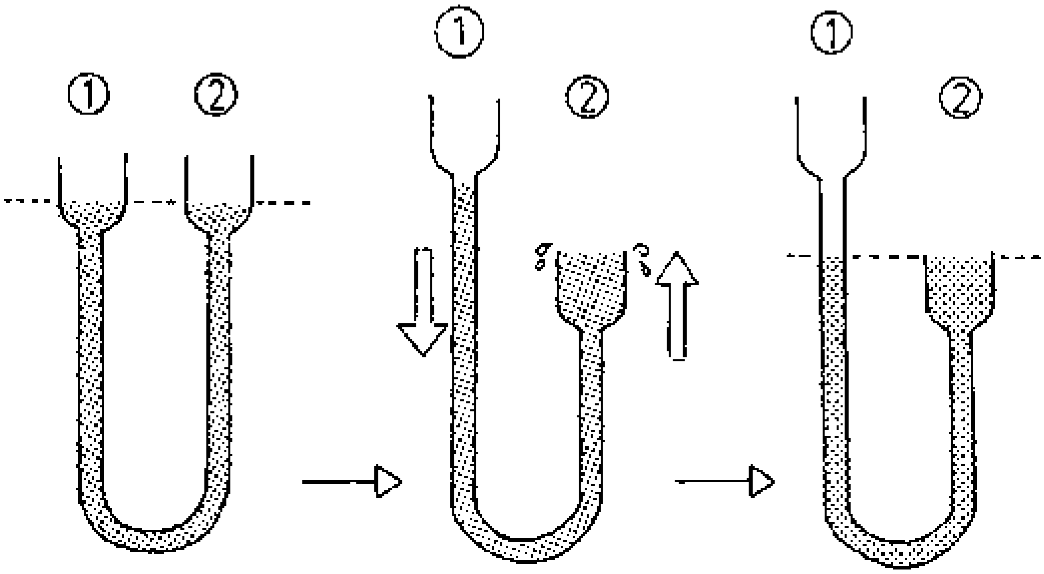

Observation:

If bottle 1 is lifted, the water level in bottle 2 is suddenly lower than that one in bottle 1 and then the water rises into the bottle 2 until the two water columns are equally high.

Analysis:

In joint vessels, water tends to stand at the same level. Thus water can be taken from taps which are placed lower than the water-storage tank. If the bottle 1 is lifted up high enough, water will spout out of the top of bottle 2.

Practical Use:

The principle of joint vessels is used in floodgates. Ships are lifted or lowered onto an adequate water level with the help of water which flows in and out.

Further practical applications: Roman water pipes, wells, irrigation plants.

Further thought:

This experiment contains implicitly a method to keep a gas volume constant when the temperature rises.

How does it work?

8.2. THE PRINCIPLE OF A WELL

Main Goal:

This experiment demonstrates the working mechanism of joint vessels

(see experiment: MODEL OF A WATER-PIPE)

Information:

In order to obtain drinking-water, a well can be dug into the aqueous layers of the soil. The ground water soaks into the well up to the level of the ground water surface and can be taken from the well with a bucket.

Materials and Apparatus:

tin (cola tin) with the top removed
nail
hammer
glass vessel or a bucket with water
tin-opener or pair of plate-shears

Procedure:

Two to three holes are made with the nail and the hammer in the tin walls.

As demonstrated in the diagram below, the tin is dipped into the water.

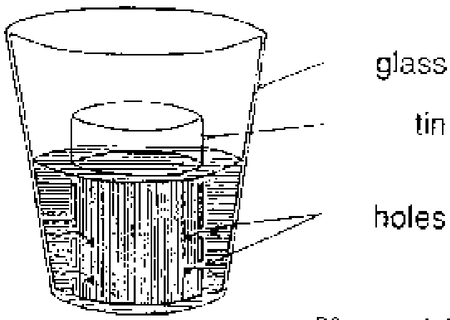

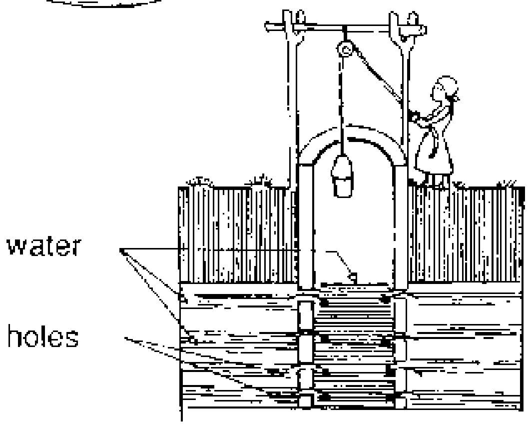

Observation:

The water soaks into the tin through the holes. The water level inside and outside of the tin adjustes itself after a short time.

Analysis:

The well which is represented by the tin, and the ground water surface represented by the water surface in the vessel are joint vessels. In joint vessels the water surfaces always adjust to each other.

Further thought:

What is the maximum height to which water could be drink through a straw?

8.3. THE SIDE-PRESSURE OF A WATER-COLUMN

Main Goal:

This experiment demonstrates the pressure increase from the top to the bottom of a water column.

Information:

The pressure of a liquid onto the bottom and sides of a liquid column depends exclusively on its height. The pressure increases towards the bottom. A water-column of 10 m exercises a pressure of 1 atmosphere (about 1.013 bar) onto the bottom.

Materials and Apparatus

container made of sheet metal (tin or cola tin)
- should be very high and open at the top -
nail
hammer
water
plate-shears or tin-opener

Procedure:

3 holes are made at different heights in the metal container. Afterwards it is filled with water.

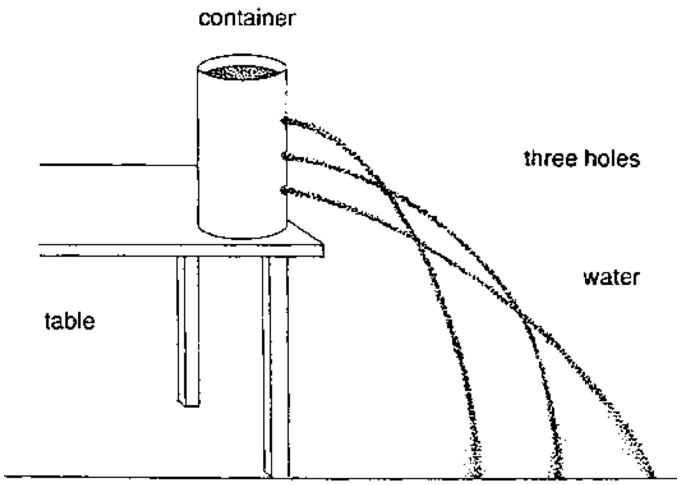

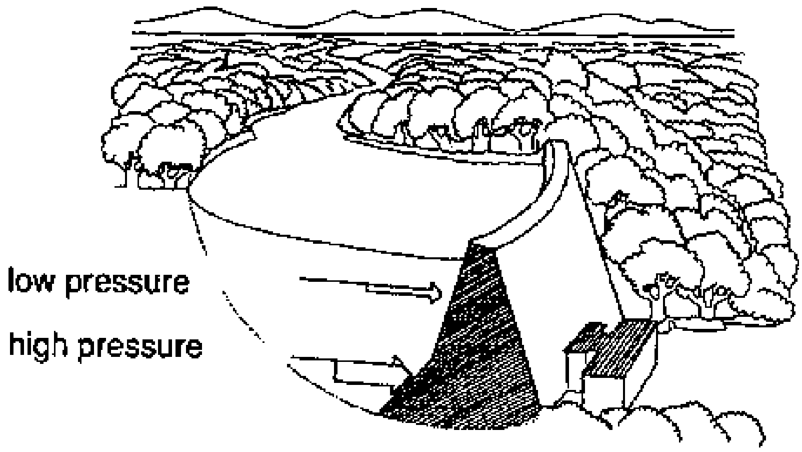

Observation:

see diagram

Analysis:

The pressure is exercised onto the sides as well as onto the bottom of the tin. It increases with the height of the water-column, because it's the weight of the water column above the level of the hole that determines the pressure. The more weight, the more pressure.

Practical Use:

When roller dams are built, the walls are reinforced towards the ground, in order to make them withstand the water pressure which increases with the height of the water-column.

Further thought:

Is there any difference concerning the water pressure acting against the bottom of the dam in the drawing, when you have a small volume of water held back or a very big one? The depth shall be the same in both cases.

8.4. VOLUME DETERMINATION OF A STONE

Main Goal:

This experiment demonstrates how to determine the volume of an uneven solid body on the basis of its liquid displacement. (it is necessary that the body is dipped completely into water.)

Information:

If a stone is placed into water, it displaces as much liquid as corresponds to its volume. (This is also true for other kinds of liquids, such as alcohol, oil and also for all gases.)

Materials and Apparatus:

stone
measuring cylinder (measuring flask)
water

Procedure:

The measuring cylinder is half filled with water. The water level is exactly read before and after inserting the stone.

Take care that no water splashs out of the cylinder when the stone is inserted.

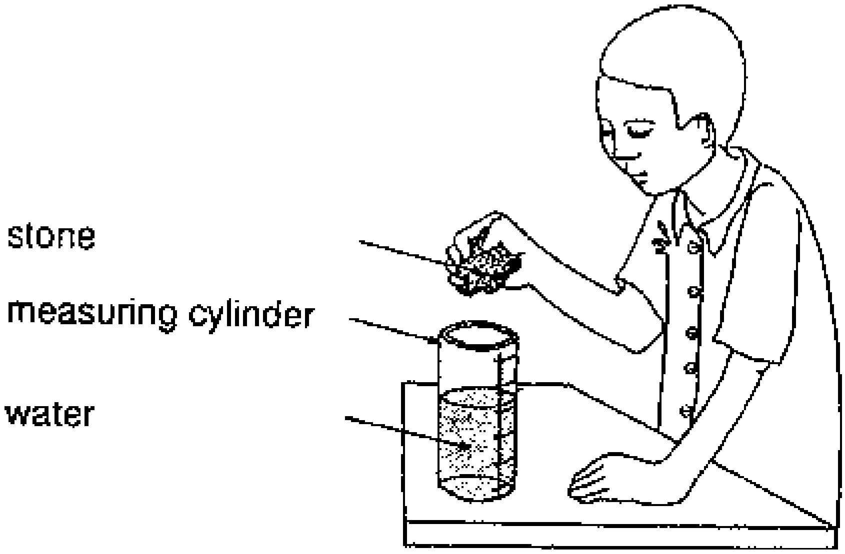

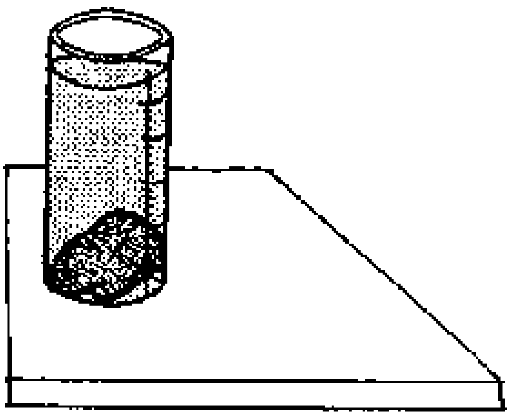

Then the stone is placed into the measuring cylinder.

Observation:

The stone sinks to the bottom, and the water level rises.

Analysis:

The stone displaces just as much water as it needs to settle in the cylinder.

The water that has been at the place where the stone is now situated had no other choice than to rise and to settle above the stone. Thus, the water level rises.

The amount of water (the volume) has not changed.

The difference between the two readings is a measure of the volume of the stone.

Further thought:

This method functions because the rock (or other solid bodies) doesn't change its volume when submerged in water.

What's about your body when you are submerged? Does the method work too?

8.5. A RAZOR BLADE FLOATS ON TOP OF WATER

Main Goal:

This experiment illustrates the phenomenon of surface tension.

Information:

At the surfaces of liquids are cohesive forces (Latin: attractive), whose forces are directed inward.

These forces tend to pull the surface molecules inward, which means, to reduce the size of the surface.

This special cohesion between like molecules is called "surface tension".

Materials and Apparatus:

vessel
razor blade (greased needle, paper clip)
water

Procedure:

a. One vessel is filled half way with water.

The razor blade is placed flat onto the water surface.

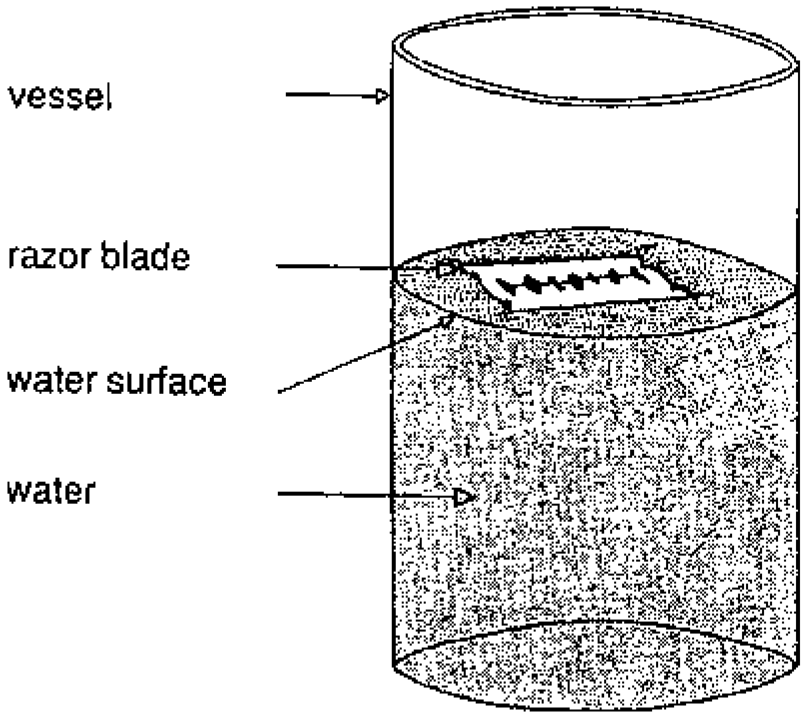

b. An attempt is made to place the razor blade on the water surface on one of the cutting edges.

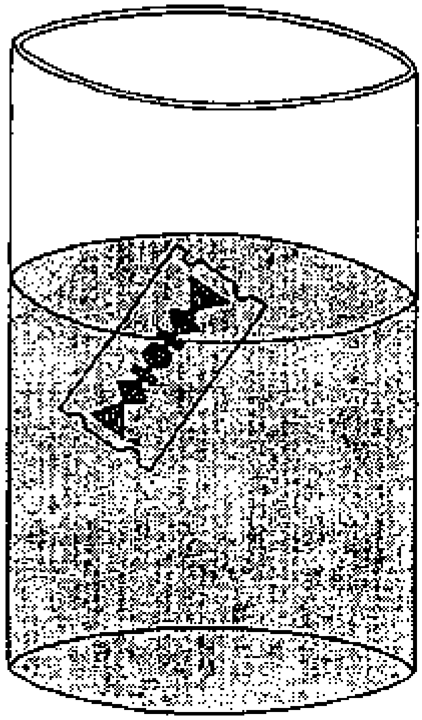

Observation:

a. The razor blade floats on top of the water.
b. The razor blade sinks.

Analysis:

The water surface can be imagined as one connected water skin. It is temporarily destroyed when the razor blade sinks in.

This characteristic of liquids is called “surface tension”.

Examples:

Insects which run over the water surface can be observed, e.g. the water-runner. Further examples of surface tension are rain drops or dew drops.

Further thought:

Why do rain drops have a spherical shape?

8.6. WATER HAS A SKIN

Main Goal:

This experiment demonstrates the phenomenon of surface tension.

(see experiment: A RAZOR BLADE FLOATS ON TOP OF WATER)

Materials and Apparatus:

waxed paper
pipette (drinking-straw)
water

Procedure:

With the help of a pipette, several small portions of water are dropped onto waxed paper.

waxed paper

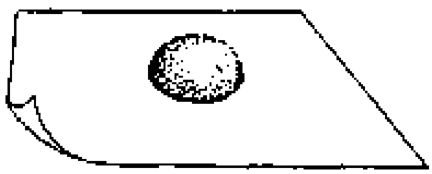

Observation:

Small drops are really spherical. If pushed together, bigger drops are formed that are more tear-shaped.

Analysis:

The high surface tension of water is responsible for the holding together of this "surface skin".

The surface tension tends to form the smallest possible surface surrounding the volume of water. 1 sphere has the smallest possible surface.

Addition:

If some drops of soap solution or some small grains of a detergent are added to the “heap of water”, it dissolves at once. The surface tension of water is reduced.

Practical Meaning

The reduction of the surface tension of water is achieved with detergents to increase the wetting ability of dishes or clothing.

(see further experiments with detergents)

Further thought:

What additional effect makes bigger drops more tear-shaped?

8.7. THE PHENOMENON OF SURFACE TENSION

Main Goal:

These experiments use a soap solution to illustrate the surface tension.

Information:

(see experiment: A RAZOR BLADE FLOATS **ON** TOP OF WATER)

Materials and Apparatus:

concentrated soap-solution

a. clay pipe or a peashooter

b. a ring of wire

a loop of thin yarn
needle

Procedure:

a. Soap-bubbles are blown with a clay pipe.

The mouthpiece is then released and observed.

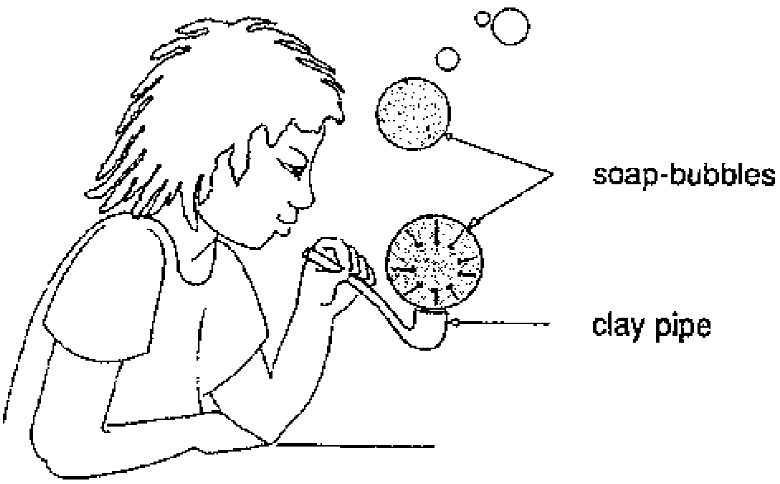

b. As demonstrated in the diagram below, a wetted loop of yarn is placed onto the soap skin. This skin is pricked in the centre of the yarn loop.

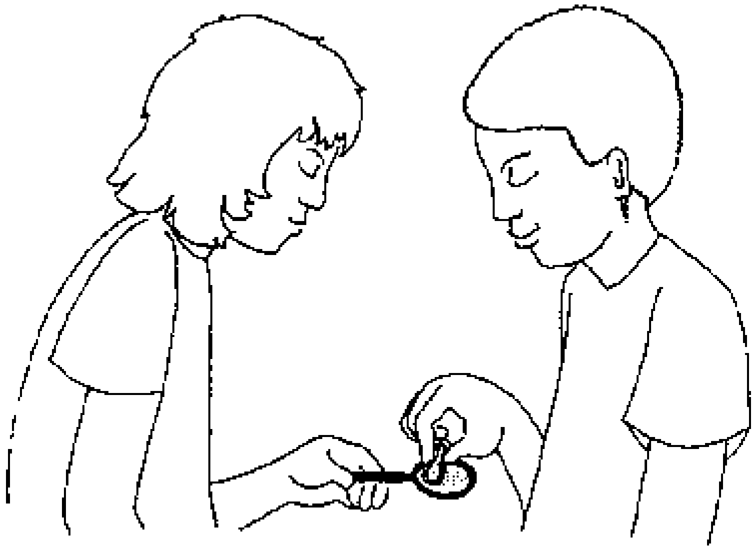

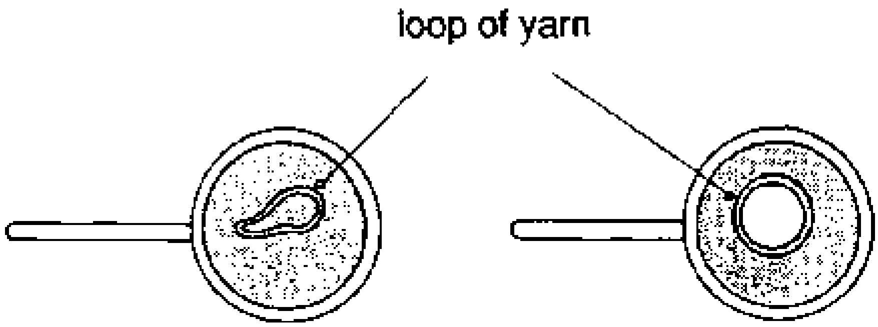

Observation:

a. The soap-bubbles slowly become smaller.
b. The loop of yarn is drawn apart.

Analysis:

a. Round soap-bubbles develop due to surface tension, which presses the air out of the soap-bubble, so that its surface size decreases. The surface tension tends to minimize the surface area.

b. The surface tension is responsible for the yarn loop being torn apart. The remaining soap skin has minimum size when the yarn has a circular shape.

The surface tension of different liquids varies.

Water has a very high surface tension, so that it is not possible to form a “water bubble” in analog to the “soap-bubble”.

Further thought:

The surface tension of hot water is smaller than that one of cold water. Why?

8.8. WATER ASCENDS IN SOIL

Main Goal:

This experiment illustrates the phenomenon of capillary action. (Latin: suction effect of very thin tubes)

Information:

Very thin tubes are called capillary tubes (capillary -Latin: hair-like). In these, water climbs up. The thinner the tube, the higher the water climbs. The cause is the surface tension (see further experiments on surface tension).

Water molecules are attracted to glass or other substances more than to each other. This effect is called adhesion. When a glass tube is dipped into water, the adhesion between glass and water causes a thin film of water to be drawn up over the surface of the tube. Surface tension causes this film to contract. The film on the inner surface continues to contract, raising water with it until the adhesive force is ballanced by the weight of the water lifted (see drawings).

capiilarity

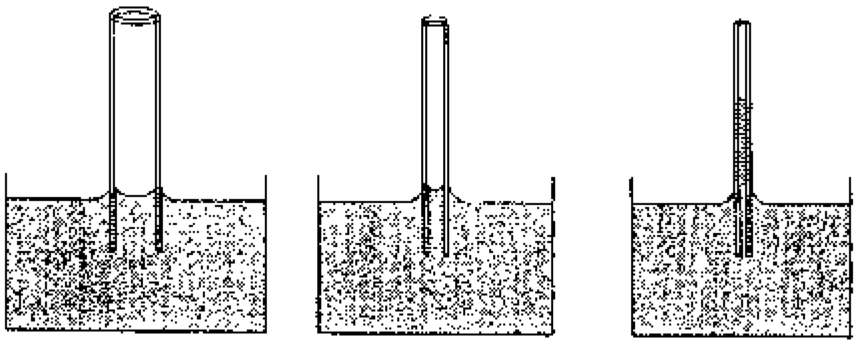

Materials:

piece of white chalk
ink or coloured water
(transparent tubes of different diameter)

Procedure:

The chalk is dipped 10 cm into the ink-solution.

After 10 minutes, the piece of chalk is broken into two, at the point to which the coloured solution has climbed.

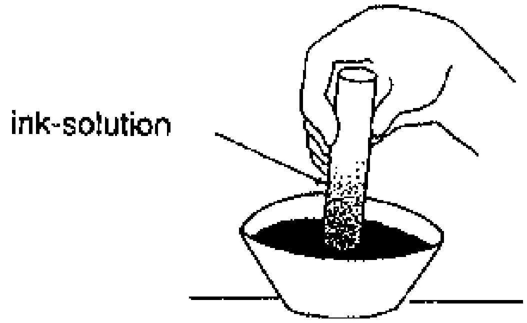

Observation:

The ink climbs up the piece of chalk.

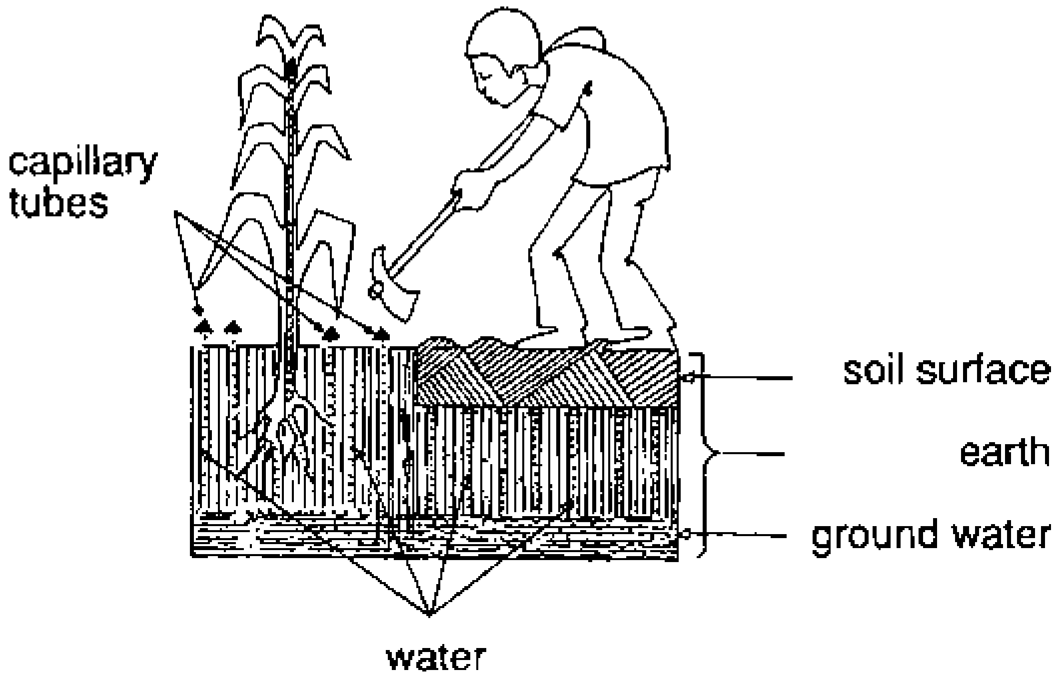

Analysis:

This observation is called “capillary action” or the suction effect of hair-like tubes.

Practical Meaning:

Ground water climbs up in soil because of capillary action. So the roots of plants are continually supported with water even in dry seasons. (Capillary tubes are formed when the soil sags and rainwater flows slowly in thin streams through the soil.)

Usually the water climbs up to the earth’s surface, where it evaporates. When farmers hoe the ground, they make the capillaries wider and the water does not go up. Thus, they hinder this process, as the capillary effect is reduced. Therefore, the water loss of the soil is reduced for some time. Furthermore, the soil surface is loosened and the area of surface is increased.

Further thought:

Why is oil soaked upward in a lamp wick when one end hang in oil?

8.9. DETERGENTS FACILITATE THE ABILITY OF PERFUSION

Main Goal:

These experiments illustrate the effects of water and a detergent solution on fabric cloth.

Information:

Soaps and detergents reduce the surface tension of water.

The process of perfusion, which is the absorbtion of a detergent solution (soap solution) by the fabric cloth, is facilitated.

Materials and Apparatus:

detergent solution (soap solution)
(1 g detergent in 100 ml of water)
water
2 wool threads
2 small rags
2 vessels

Procedure:

One vessel is half filled with water; the second is half filled with a detergent-solution.

A wool thread and a small rag are placed into each vessel.

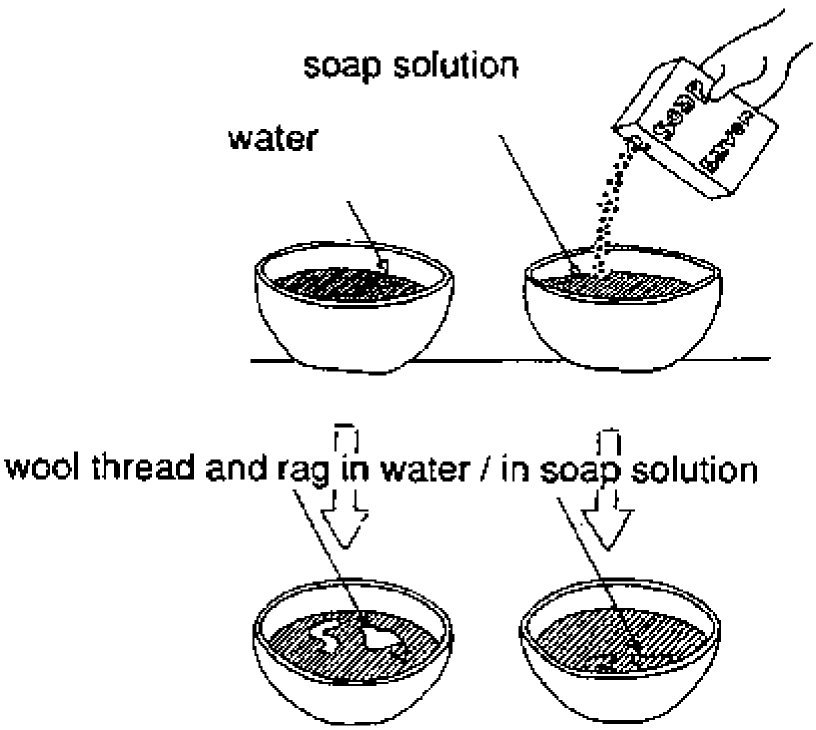

Observation:

The wool thread and rag sink ralatively quickly into the detergent solution. The rag sinks much more slowly into pure water, whereas the wool thread hardly sinks or does not sink at all.

Analysis:

Compared to a detergent-solution, pure water soaks more slowly into similar fabric cloths.

Practical Use:

Soaps and modern detergents are used for the cleansing of laundry.

(see experiment: THE EFFECT OF DETERGENTS ON DIRT)

Further thought:

If soap reduces surface tension of water, why do we blow soap bubbles instead of water bubbles?

8.10. THE EFFECTS OF DETERGENTS ON DIRT

Main Goal:

This experiment illustrates that dirt is distributed in very small particles in a detergent solution.

Information:

The basic components of dirt are grease, soot, and proteins. Detergent molecules distribute soot and grease particles, in the washing solution so that they can be washed away.

Fruit and vegetable stains are destroyed by bleach. The experiments demonstrate the perfusion of soot and grease by detergents.

Materials and Apparatus:

a. 2 glass dishes (test tubes)

soot (activated carbon or wood charcoal)

b. 2 glass dishes (test tubes)

oil (salad oil, engine oil)
detergent solution
(about 1 teaspoon of detergent in a big vessel of water)

c. 2 funnels

2 paper filters
2 glass dishes

Procedure:

a. One glass dish is half filled with water;
a second is half filled with detergent solution.
Some soot (about one spatula tip) is added to each dish, vigorously shaken and then filtered.

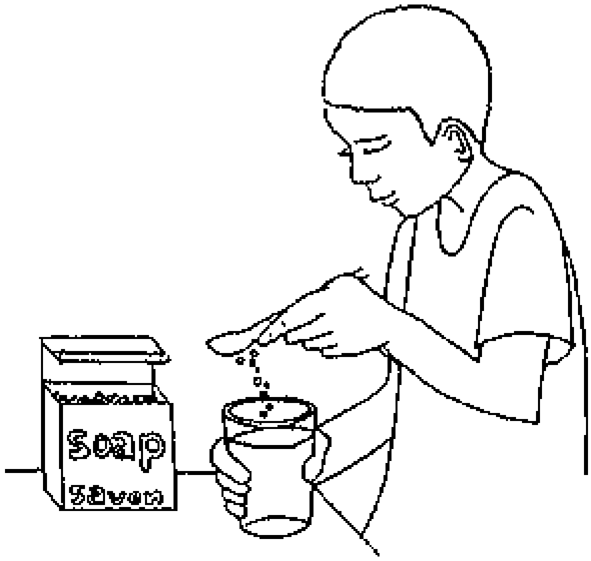

b. One glass dish is half filled with water, a second is half filled with detergent solution. About 0.5 ml oil is added to each dish, and then the dishes are vigorously shaken.

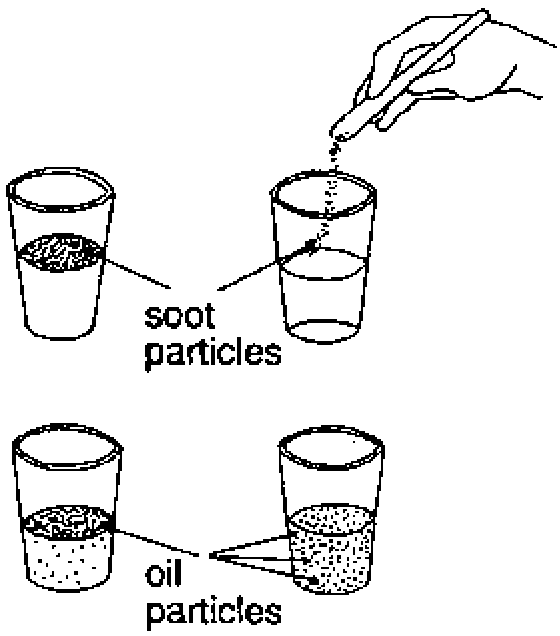

Observation:

a. The soot particles in the detergent solution are distributed, whereas those in water recollect on its surface. The soot particles in the detergent solution are hardly retained by the paper filters.

b. The oil in the detergent solution in distributed in very small particles, whereas it forms a layer on top of the water.

Analysis:

Detergents cause oil and soot to be well distributed in water. Oil drops and soot particles are distributed and thus kept floating.

Thus, the dirt particles are prevented from being deposited on the fabric cloth again. In the first case of the soot particles in a detergent solution, a **suspension is formed. In the case of detergent solution and oil, a suspension is formed.**

(emulsion: a mixture of two liquids; suspension: a misture of a liquid and one solid, which can not solve in the liquid)

Practical Use:

Soaps and detergents are used to remove dirt from clothes, dishes, and the human body.

Further thought:

We say that some liquids “wet” a surface, whereas other don’t do this. What’s the difference? Where is it coming from?

9. MECHANICS

9.1. GEAR MECHANISM - A TRANSMISSION

TO SPEED UP

Main Goal:

The pupils become familiar with an important element of machines - the gear transmission.

Information:

In technology, cogwheels serve to transmit rotary motions.

The simplest kind of gear transmissions consists of a driving gear, an output gear, one crank, two spindles, and two bearings. A gear transmission transmits two unchanging rotary motions, motions into slowness, into speed, in opposed motions and motions into other revolving planes.

If there is a transmission to speed up, the bigger of the two cogwheels is the driving gear and the smaller one is the output gear.

Materials and Apparatus:

firm corrugated board
screws
wire
knife or pair of scissors
coloured pencil

Procedure:

Two cogwheels - one with 20 and the other with 40 cogs are made of the corrugated board. The screws serve as spindles and simultaneously as fastening devices on a sheet of corrugated board. A crank - made of wire - is fastened to the bigger cogwheel.

One cog of each gear is coloured, to determine the number of rotations.

The bigger cogwheel is driven by the smaller one.

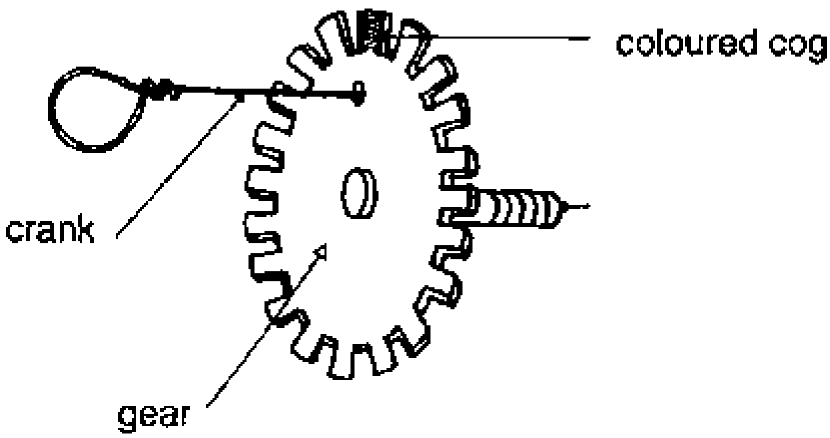

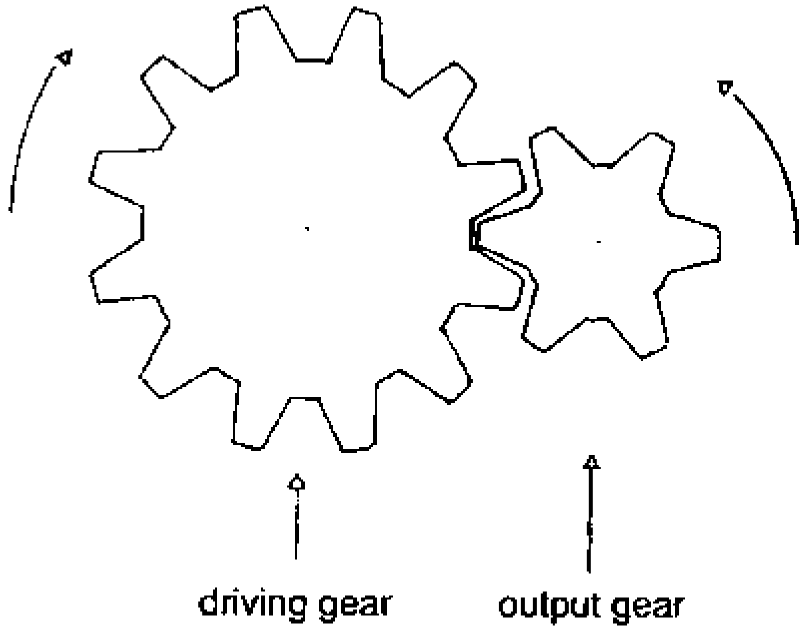

Observation:

Driving gear and output gear rotate in opposite directions. The output gear turns twice as fast as the driving gear.

Analysis:

If a rotary motion is transmitted from a bigger driving gear onto a smaller output gear, the number of rotations of the smaller cogwheel is greater.

The quotient of the number of rotations is called transmission. It is coputed by the proportion between the two cogwheel radii or between the proportion of the cogs of the single gears.

$$\mathbf{u = r_1/r_2 = z_1/z_2}$$

u: transmission
r: radius of a gear
z: number of cogs

Practical Use:

One of the numerous examples of such a transmission is the gear mechanism of a grinding machine. The grindstone (as working element) is connected over a spindle to a smaller output gear, which speeds up. With bicycles, the motion is transmitted over the chain.

9.2. GEAR MECHANISM - A TRANSMISSION TO SLOW DOWN

Main Goal:

By means of this experiment the pupils experience an important element of machines - the gear transmission.

This experiment demonstrates a transmission in order to slow down.

Materials and Apparatus:

corrugated board
screws
knife or pair of scissors
wire
coloured pencil

Procedure:

see “GEAR MECHANISM - TRANSMISSION TO SPEED UP”

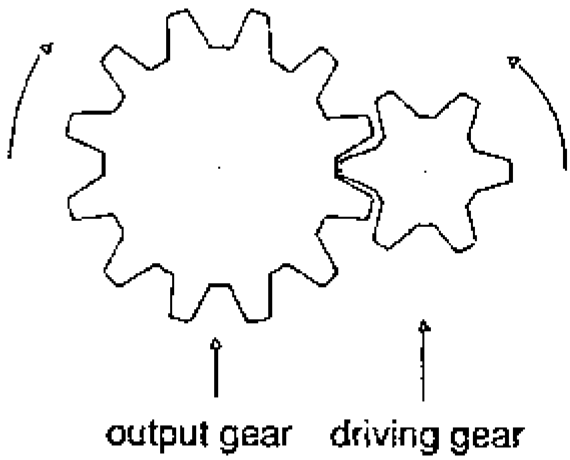

Observation:

Driving gear and output gear turn into the opposite directions. The driving gear turns double as fast as the output gear.

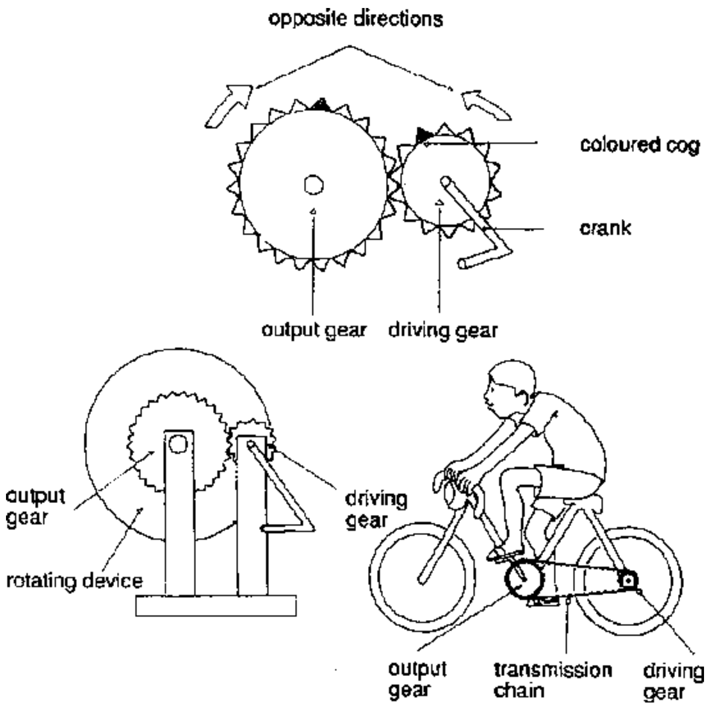

Analysis:

If a rotary motion is transmitted from a smaller driving gear onto a bigger output gear, the number of rotations of the bigger cogwheel is smaller. The quotient of the number of rotations is called transmission. It is computed by the proportion between the two cogwheel radii or by the proportion between the cogs of each gear.

$$\mathbf{u = r_1/r_2 = z_1/z_2}$$

u: transmission
r: radius of a gear
z: number of cogs

Practical Use:

A vivid example of a transmission to slow down is the gear mechanism of a bread-slicing machine. The knife as working element is connected to a big output gear which undergoes a transmission into slowness by a smaller driving gear.

9.3. A SEESAW - A TWO-ARMED LEVER

Main Goal:

Pupils learn that a seesaw is a two-armed lever and flat in case of equilibrium. There is a special relationship between the length of a levers and the weights resting on them. For older pupils this experiment provides a mathematical basis to approach the law of the lever.

Information:

In physics, a lever is a bar, which can turn about one point (axis). This point is called the fulcrum. The fulcrum of a two-armed lever lies between the two attacking forces (see drawing 1). If a lever is in balance, the effects on left and right are equal. These effects are the product of the attacking force and the lever bar (distance between attacking force and the fulcrum). In drawing 1 the attacking forces F_1 and F_2 are the weights of the paper clips.

The law of lever says:

$$F_1 \times L_1 = F_2 \times L_2$$

If F_1 is considered the force that is to balance the load at the right hand side (F_2), then we have

force × force arm (left hand side) = load × load arm (right hand side)

Materials and Apparatus:

styrofoam (or soft wood)
thin iron nails
paper clips metal rings which are similarly heavy
(if existing: weights)
pencil, ruler
firm, thin wire
knife

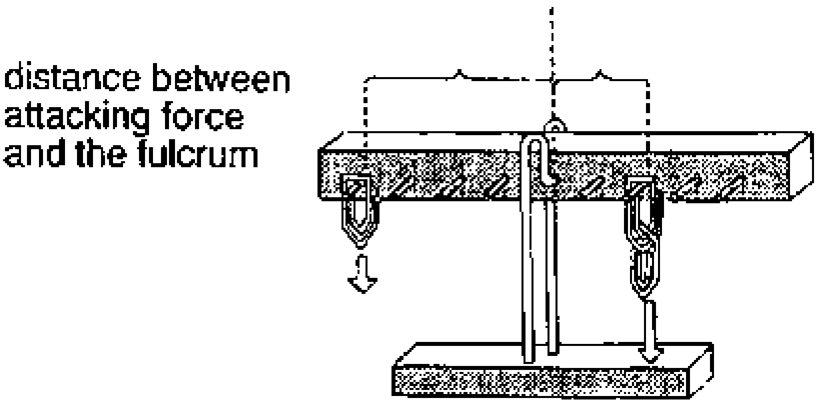

Procedure:

As shown in the drawing 1, a two-armed lever is constructed.

The axle bearing has to enclose the axis in such a way that the lever can freely rotate. However, it should not be too loose. It is favourable to pierce the styrofoam with the wire, which serves as axis and rack. Perhaps the wire should be heated before hand. The weights, e.g. paper clips or metal rings are fastened in different amounts at different distances from the fulcrum.

(This corresponds to the children on a seesaw.)

It is the pupils' task to balance the lever.

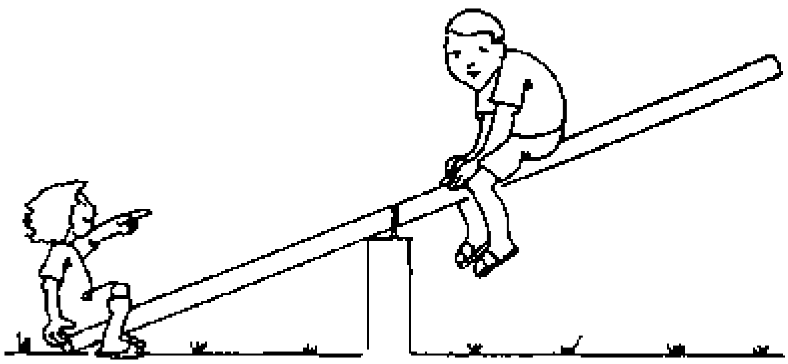

Observation:

The lever is balanced if the same number of paper clips is placed on each arm of the lever at the same distance from the fulcrum or, if different weights are fixed, the heavier weight must be closer to the fulcrum in order to balance the lever.

Analysis:

When the lever is balanced, the product of force and force arm equals the product of weight and weight arm.

That's to say: the product F × L of the left hand side must be equal to the product F × L of the right hand side.

Practical Use:

Examples of two-armed levers include: beam scales, scissors, pliers, and railway-signals.

Further thought:

What must be done in the situation of drawing 2 when the seesaw is to be balanced? There are two possibilities.

9.4. MODEL OF A SIMPLE CABLE WINCH

Main Goal:

Younger pupils learn that loads can be moved more easily with the help of a cable winch. Older pupils trace the cable winch back to a two-armed lever.

Information:

With the help of a cable winch, loads can be lifted vertically, or pulled closer horizontally more efficiently, i.e. with less effort.

Simple cable winches consist of a cable drum, the cable, and the friction drive. The friction drive can be moved by hand as well as by a motor.

(see experiment: A SEESAW - A TWO-ARMED LEVER)

Materials and Apparatus:

stone as the load
rope
tin (with 2 holes) filled with sand, (see diagram)
pierced cork-stopper
stable wire

Procedure:

The experiment is set up as shown in the diagram below. The stone is lifted once with the help of the cable winch, and another time without it.

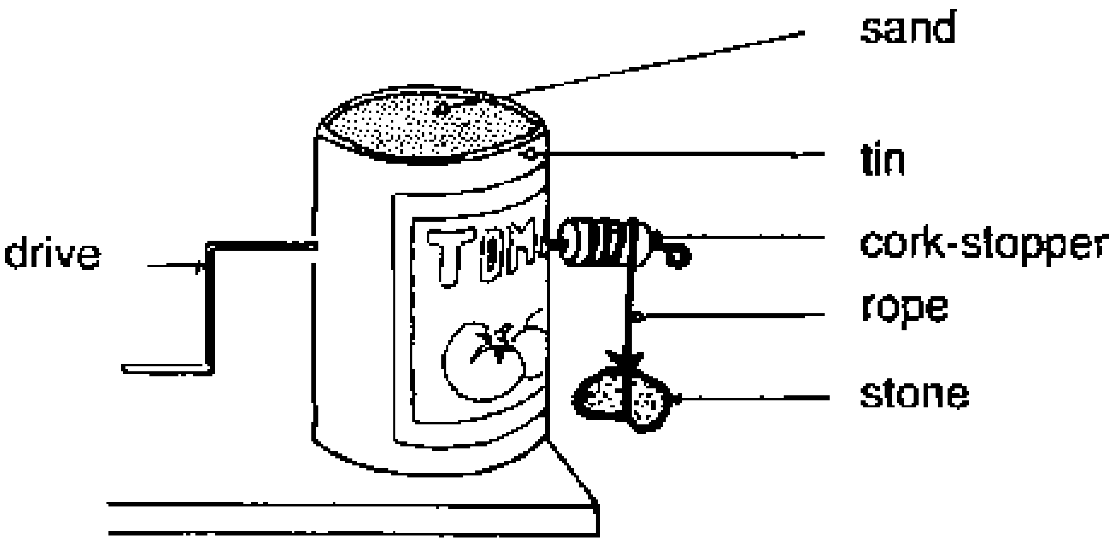

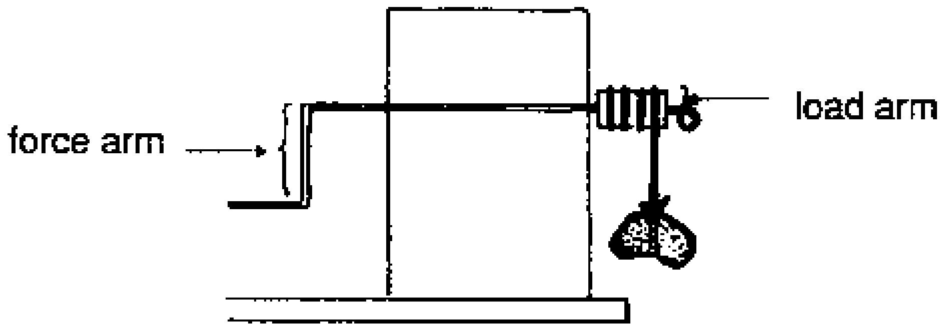

Observation:

The stone can be lifted more easily with the cable winch.

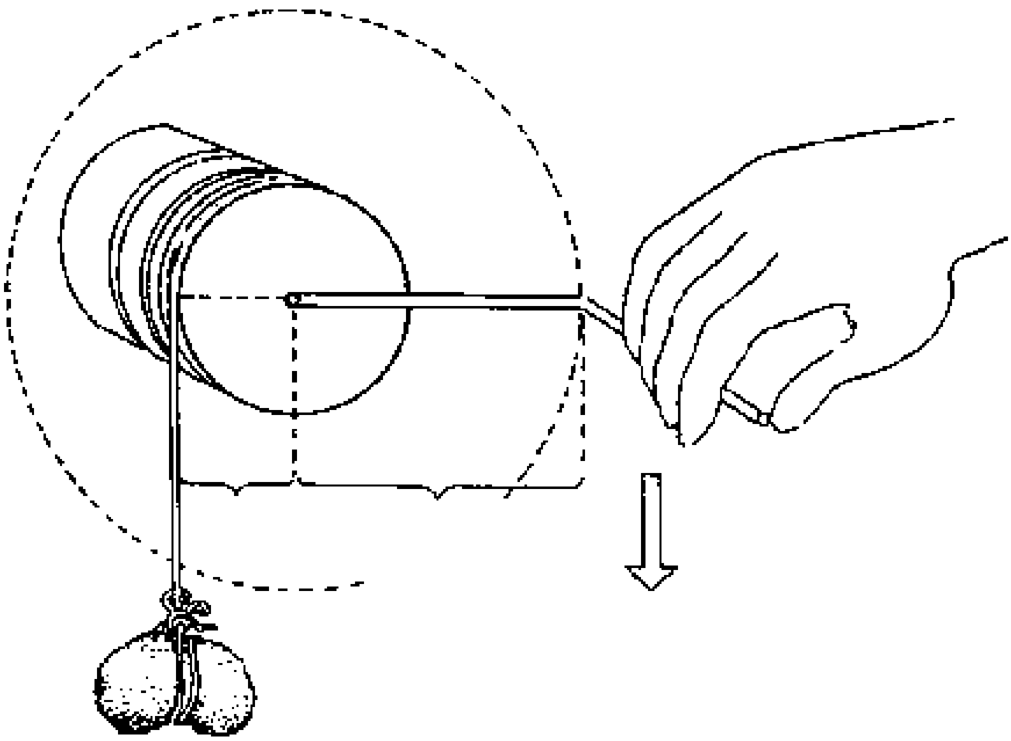

Analysis:

The winch presents a two-armed lever. When a load is lifted, force is saved, because the force arm is longer than the load arm. Thus the required force is smaller than the load (weight of the stone).

Practical Use:

Uses for winches: water cranes, pit-head frames, lifting device at wheels, etc.

Further thought:

We save force with cable winches or levers.
Do we get this for granted or do we have somehow to pay for?

9.5. INERTIA

Main Goal:

The experiment illustrates well-known observations, from which the law of inertia can be derived.

Information:

Inertia describes the property of all bodies to counteract a change in motion. That's what experience teaches us.

The heavier a body is, the more inertia it exerts.

It is more difficult to put a heavy body from a position of rest into motion than a light one.

More force is needed to stop a heavy body than to stop a lighter body.

Materials and Apparatus:

glass, tin etc. with smooth rims
coin
firm paper (cardboard)

Procedure:

The experiment is prepared as shown in the diagram below.

The paper is pulled away horizontally as quickly as possible.

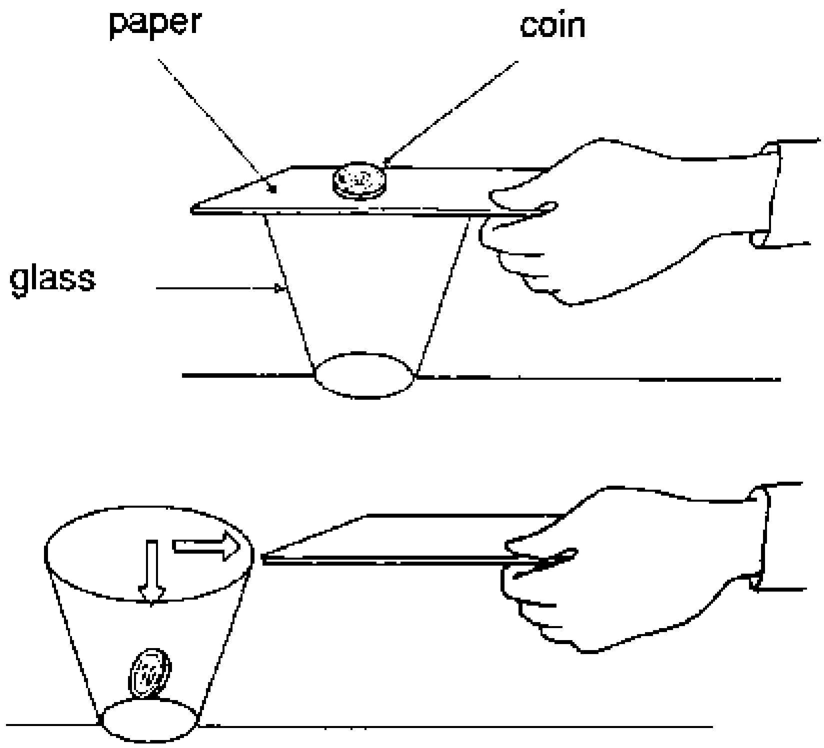

Observation:

The coin falls into the glass. It does not join the movement of the paper.

Analysis:

If stationary bodies try to remain in a position of rest, then, once in motion, they should also try to remain in motion. They should resist to change their state of actual motion. This is, in fact, the case.

Practical Use:

these principles can be observed with vehicles - cars, buses, trains, aeroplanes. If they suddenly stop, the passengers fall forward. If these vehicles start quickly, the passengers are pressed into their seats.

It is very dangerous to jump on or off a moving train, as our body hardly can balance the sudden change in motion.

Illusionists take advantage of the law of inertia, when they pull a table cloth off a set table as quickly as a flash of lightning. With a little everybody can do this too.

Further thought:

When one pulls slowly, the coin joins the movement of the paper. Why?

9.6. FRICTION

Main Goal:

These experiments demonstrate the principles of adhesive friction, sliding friction and rolling friction.

Information:

1. Friction is the result of mutual contact of irregularities in the surface of sliding objects. Three types of friction are distinguishable:

With **adhesive friction,** the force of friction is strongest. It decreases from **sliding friction** to **rolling friction.**

The strength of the frictional force depends on the surfaces of the bodies which rub against each other and on the weight of the upper body.

2. Adhesive friction causes two bodies to stick together.

Sliding friction counteracts the act of gliding.

Rolling friction is created when one body unrolls over another one.

The force of friction can be measured with a dynamometer.

Materials and Apparatus:

2 brushes or brooms
marbles or peas
sand

Procedure:

a. As shown in the diagram, the two brushes are placed on top of each other.

b. The upper brush is moved to the right side.

c. The marbles are rolled over a smooth and a sandy (rough) ground. Their initial speed should be nearly the same.

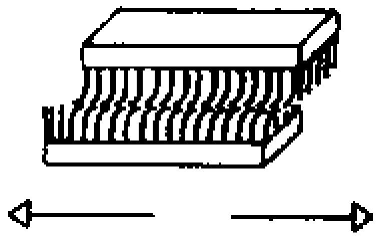

Observation:

a. The bristels grip one another.

b. The bristels of the upper brush are twisted to the left and those of the lower brush are twisted to the right side.

c. The marbles roll further on the smooth ground than on the rough ground.

Analysis:

Observation (a) is called adhesive friction.

The irregularities or unevenesses of the two surfaces grip one another.

Observation (b) is called 'gliding friction'.

The unevenesses of the two bodies grip each other less strongly than with the adhesive friction.

Observation (c) is called 'rolling friction'.

Here, the unevenesses can grip each other to an even lesser extent than in sliding friction.

The strength of the respective frictional force basically depends on the surfaces of the two bodies, which is made clear in experiment c.

Practical Use:

For reduction of frictional forces, very smooth surfaces are used in technology. In addition, lubricants, e.g. oil and graphite, are used. Frictional forces should be minimized at those machine parts which move. However, often frictional forces are necessary. Tires need a certain depth of tread patterns, so that the car does not skid on a wet road.

The brakes should not be wet or oily, because this would greatly reduce the breaking action (friction).

A nail or a screw stays in a wall or in wood because of frictional forces.

Further thought:

When we walk, has this also to do with friction?

9.7. A HEAVER - A ONE-ARMED LEVER

Main Goal:

With a one-armed lever, it can be demonstrated that a weight can be lifted more easily, the longer the force arm of the lever.

Information:

In physics, a lever is a bar, which can turn about one point (axis). This point is called the fulcrum.

The fulcrum of a one-armed lever lies at its end.

Load arm and force arm of a one-armed lever are resting on the top of one another. Thus, the two forces attack the same side of the lever.

The lever principle is:

$$\text{force} \times \text{force arm} = \text{load} \times \text{load arm}$$

Materials and Apparatus:

one heavy stone or a heavy object as load
one stable wood lath or iron rod

Procedure:

The stone is lifted with the wooden lath as shown in fig. a).

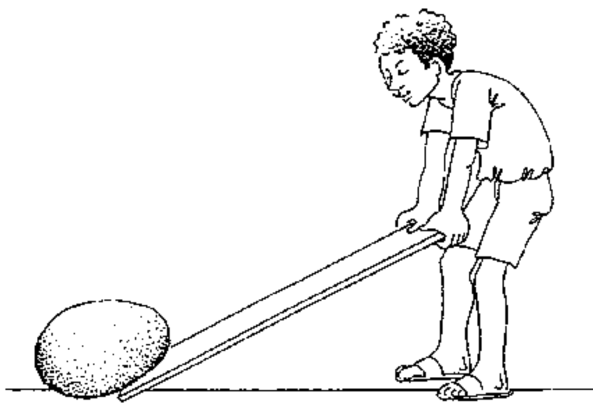

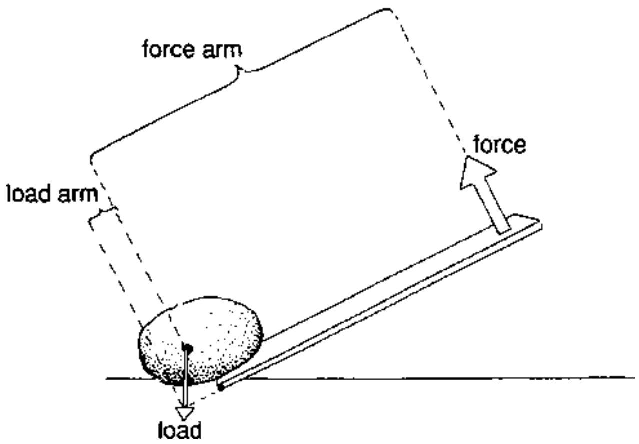

Observation:

The longer the lever, the greater the distance between the fulcrum and the end of the heaver, and the less force is needed to lift the stone.

Analysis:

If the lever is in a state of balance, the product of load (weight of the stone) and load arm equals the product of force and force arm.

(A dynanometer is needed to check this principle. It measures the force held against the load.)

Practical Use:

Examples for one-armed levers include:
a wheel-barrow and a nutcracker.

Further thought:

If we are rowing a boat, do we apply the law of levers?

10. ELECTRICITY

10.0. THE SCIENCE OF ELECTRICITY

Before we look in detail at the following experiments, here are some suggestions relating to the necessary materials and apparatus.

As the equipment used is always very similar, it is practical to build up one basic board and to put together basic equipment.

N. B.

The experiments performed with batteries, can also be performed with a transformer.

(Batteries pollute the environment and are expensive)

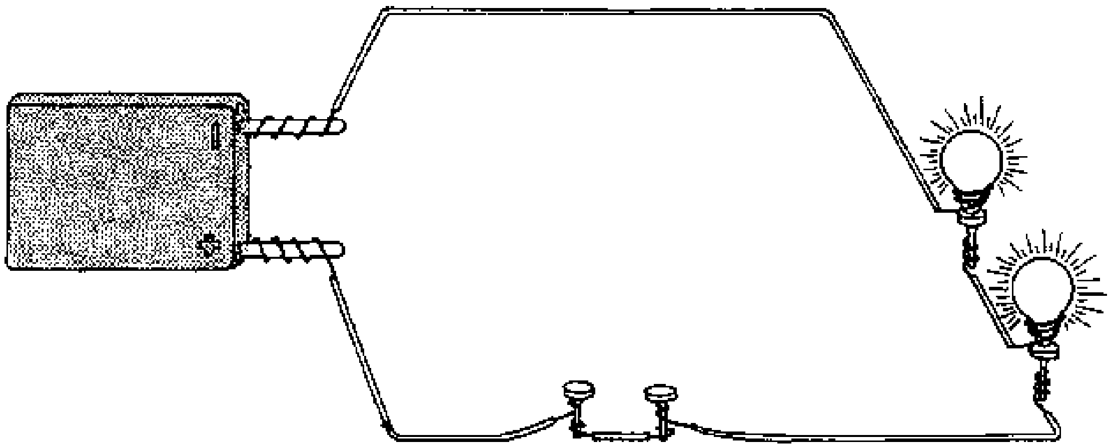

SUGGESTIONS FOR "SCIENCE OF ELECTRICITY"

a. MATERIALS

batteries	:	flat and round batteries
small light bulbs	:	e.g. from flashlights
metal sheet	:	thin, made of copper, aluminium, or iron
wire	:	single core, length as required
clothes peg	:	made of wood or plastic

drawing-pin, paper clips, different kinds of iron nail,

screws rubber bands (broad)

knife, pair of scissors, hammer, screw-driver, pair of pliers.

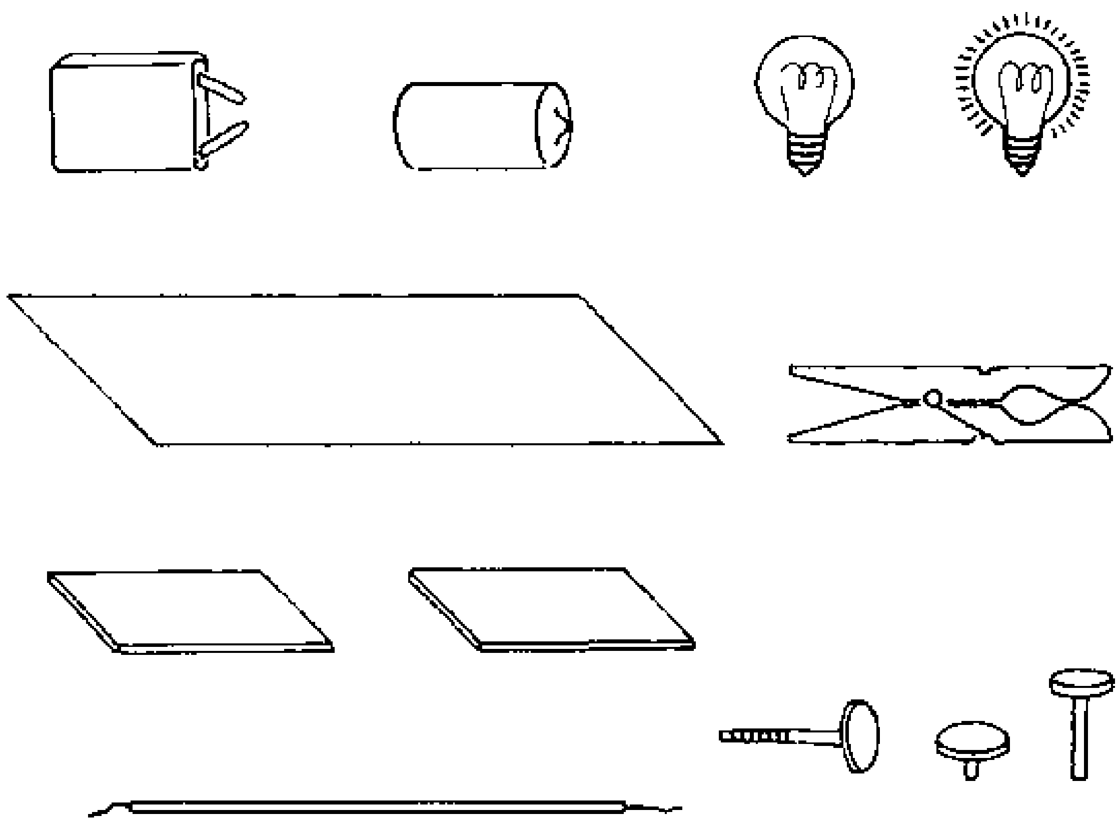

b) Suggestions for the base-plate

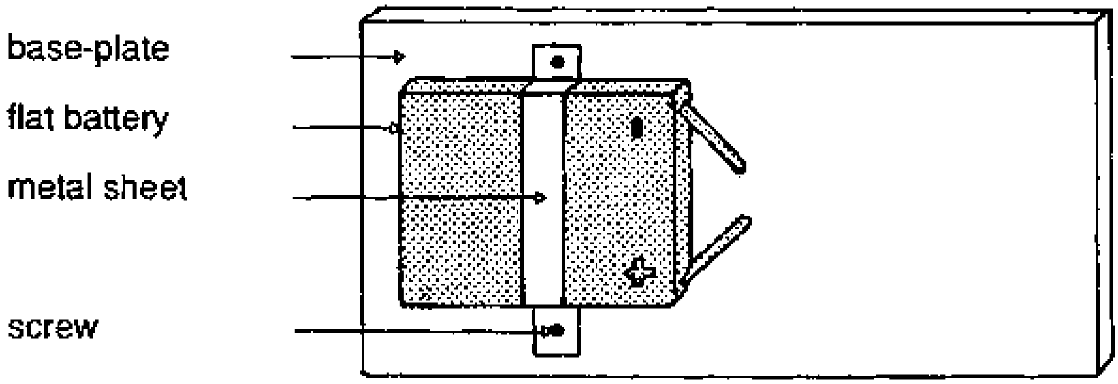

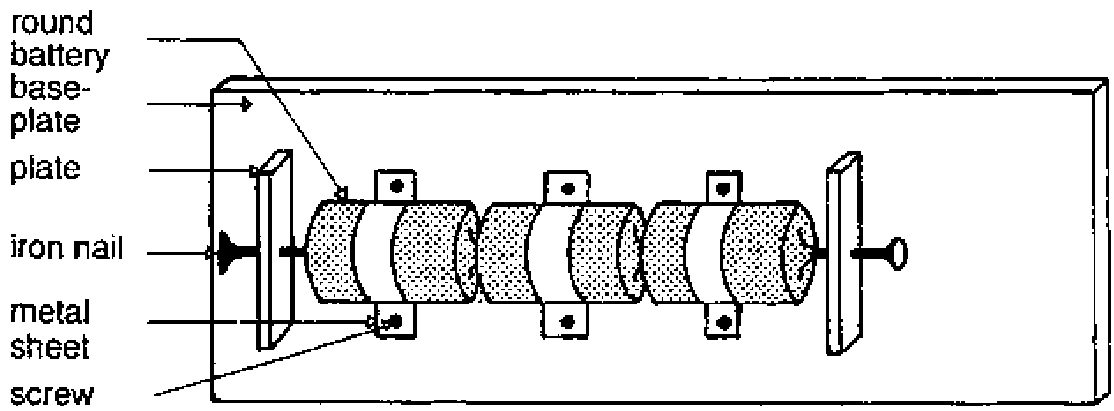

c) Suggestions for the sockets

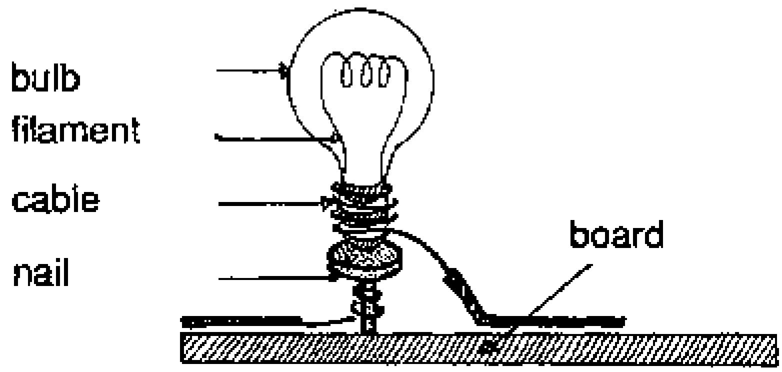

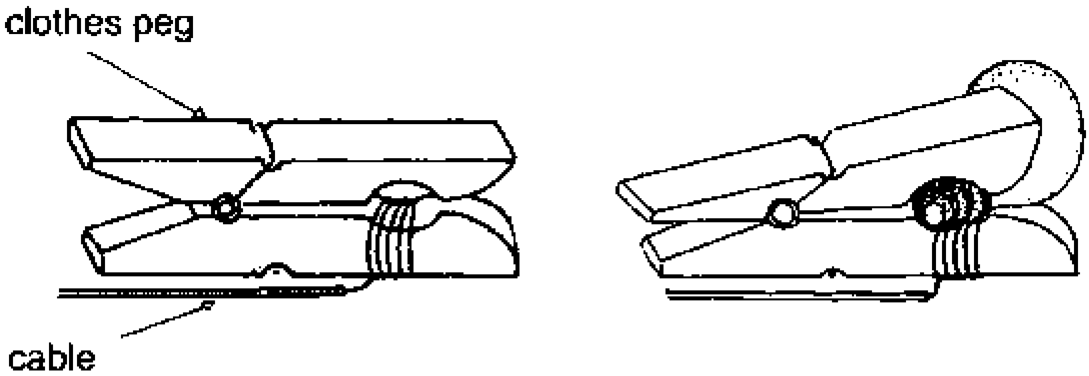

Clothes peg used as clamp

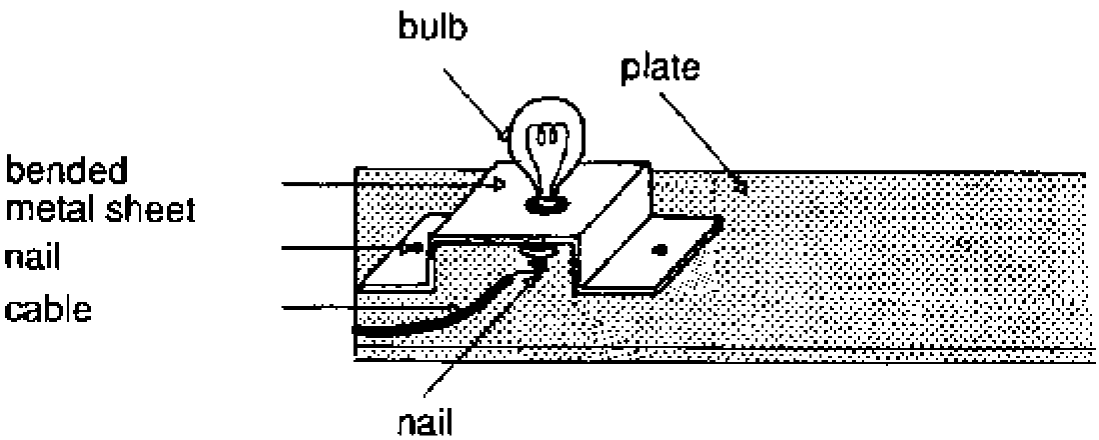

d) Suggestions for the switches

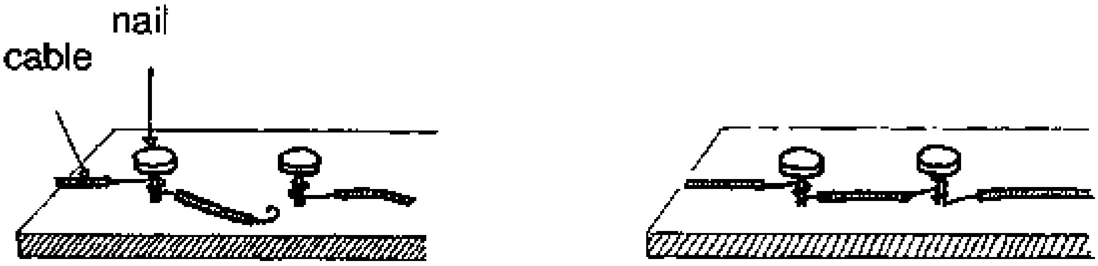

simple switch: off simple switch: on

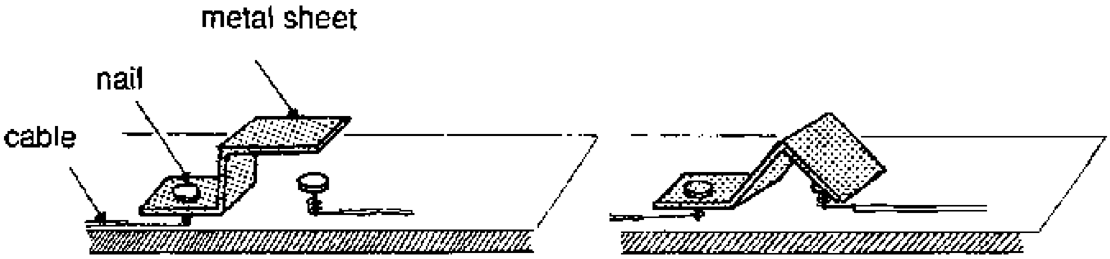

press-switch: off on

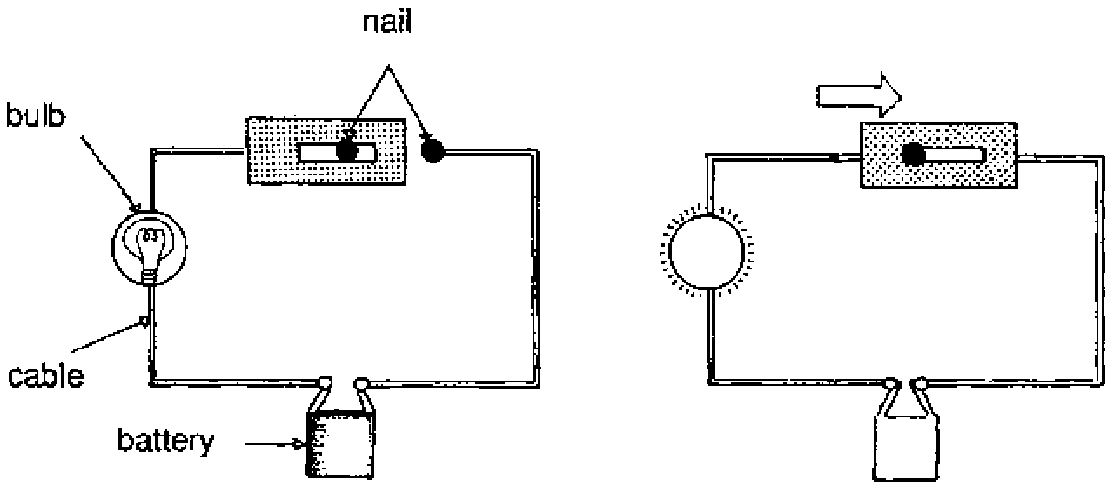

slide-switch: off on

10.1. A JET OF WATER IS DEFLECTED

Main Goal:

> **The following experiment demonstrates static electricity, which can be found when a non-conductor is charged due to friction.**

Information:

> Various non-conductors, e.g. rubber, glass, plastic, can be charged electrically by rubbing them with a woollen leather or nylon cloths.

Friction causes an electron surplus or deficiency, depending on the material, (The material, used to rub the non-conductor takes on the opposite electric charge.)

This specific charge is retained for a short period, so that the influence - electrical attraction or repulsion - may be illustrated.

The experiments can be performed best in very dry air.

Materials and Apparatus:

2 pieces of plastic sheeting, plastic bags, wool cloth
plastic comb, ball-point pen...
woollen cloth
jet or water from a water-pipe or a tin
2 balloons

Procedure:

a. The sheeting or bags are rubbed vigorously with a woolen cloth and then brought close together.

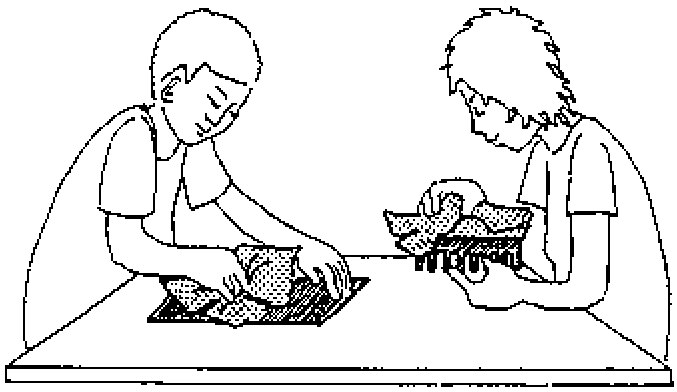

b. One piece of sheeting or bag is charged by rubbing vigorously. A finger is then held very close to it.

c. The comb is rubbed vigorously with a woollen cloth and then brought close to a thin jet of water.

d. Inflate two balloons, rub them at your woolen pullover and try to get hot balloons close together.

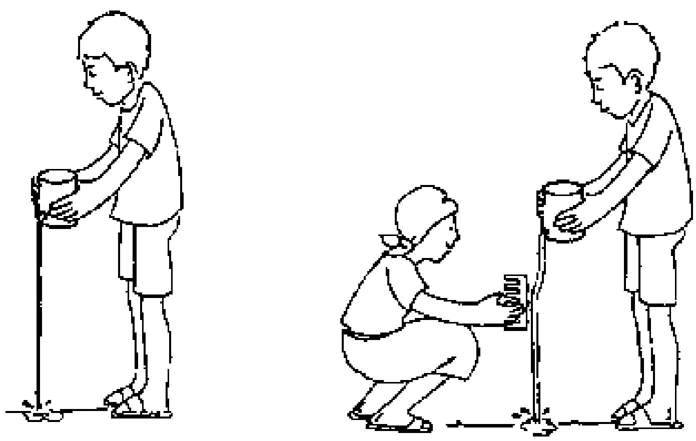

Observation:

a. The sheeting or bags repel each other. They do not touch.
b. A crackle can be heard. In a darkened room sparks can be seen.
c. The jet of water is attracted by the comb.
d. You feel a repelling force.

Analysis:

a. The sheeting/bags carry the same type of charge and repel each other.

b. Friction of non-conductors produce high voltage electricity. It breaks down immediately when a spark leaps and is not dangerous.

c. The plastic comb and the jet of water have the opposite electric charges and attract each other.

d. The same type of charge on the balloons cause them to repel each other.

Further thought:

You can put a charged balloon on a wall. It sticks to it. What is the reason?

10.2. A SIMPLE CIRCUIT

Main Goal:

This experiment teaches pupils how a simple circuit is built and how it works.

Information:

When electric charge moves in **a** circuit, it does work. The rate at which this work is done is called power. Electric power (in watts W) is equal to the product of current (in amperes A) and voltage (in volts V) across the circuit.

Thus power = current × voltage,
in units watts = amperes × volts.

A simple circuit can be demonstrated with the help of a battery and a small light bulb.

Materials and Apparatus:

battery (about 4.5 V)
small light bulb (about 2.2 V)

Procedure:

The circuit is closed as illustrated in the diagram below.

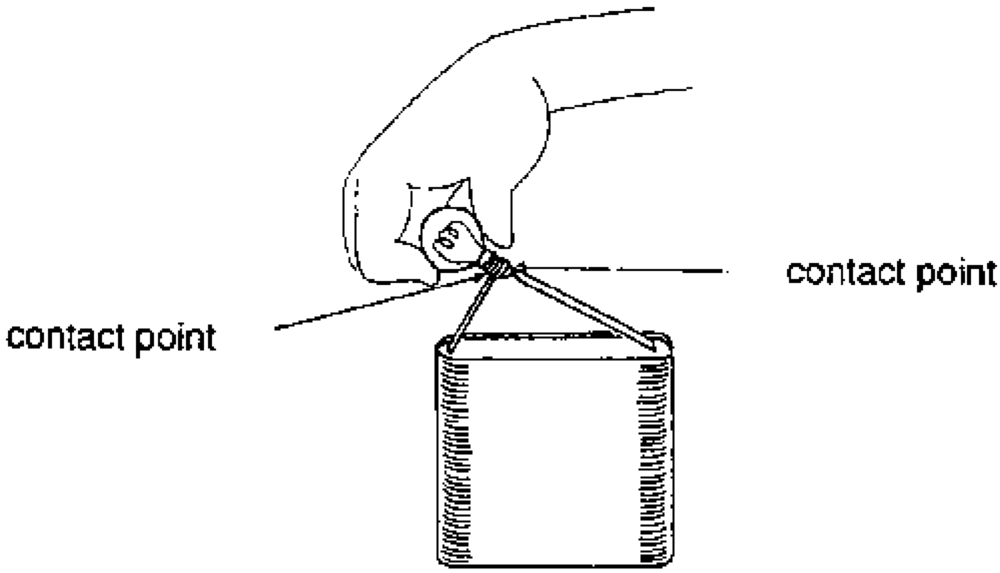

Observation:

The lamp lights up if each of the two contact points are connected with one of the poles.

Analysis:

A simple circuit consists of a battery, that provides the voltage, and of a power consumer, in this case a small light bulb. Electric current only flows if the circuit is closed. When the small bulb lights up, the circuit is closed.

Practical Use:

see “Main Goal”.

Further thought:

The electric current that flows in the circuit consists of electrons. Where do they originate?

10.3. THE PRINCIPLE OF A FLASHLIGHT

Main Goal:

This experiment demonstrates that switches can close and interrupt circuits.

Information:

Switches connect contacts. Those which are known from the household and engineering include slide switches, rotary switches and button switches.

Materials and Apparatus:

see suggestions “SCIENCE OF ELECTRICITY”

Procedure:

A circuit is set up as shown in the following diagram. The circuit is closed or interrupted with the switch.

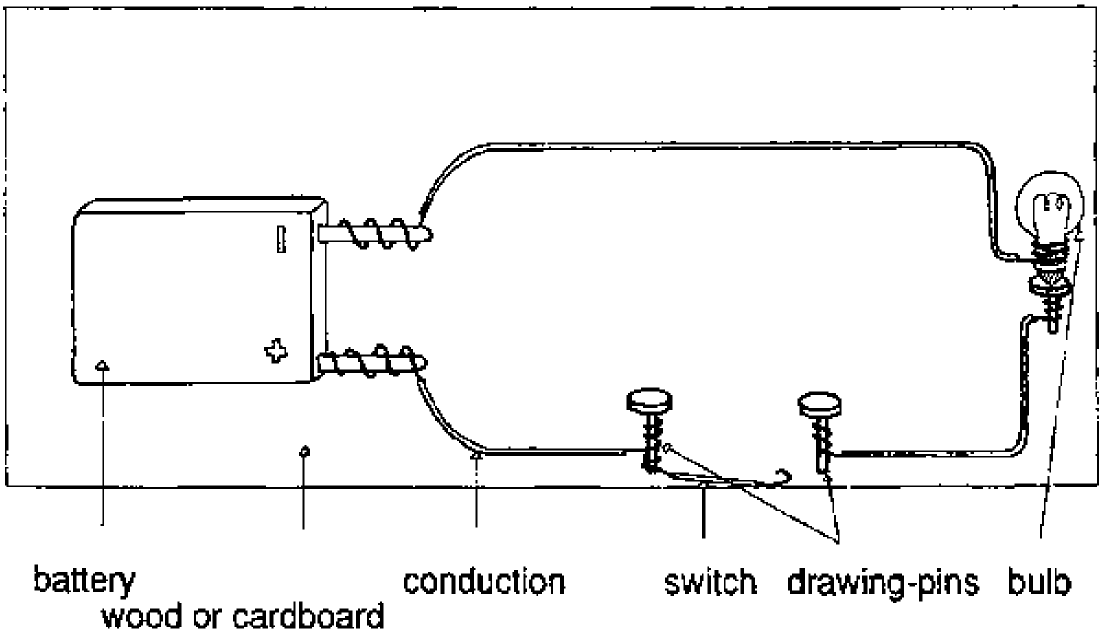

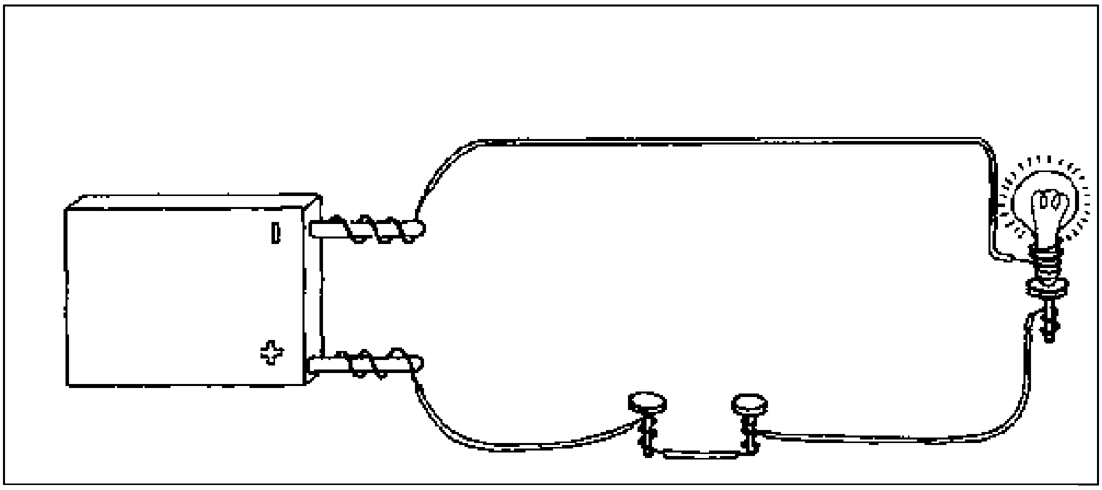

Observation:

The bulb lights up if the switch is connected with the two drawing-pins. The bulb lights off when the switch is ‘opened’.

Analysis:

Switches can close or interrupt circuits.

They connect or interrupt two conducting parts of a circuit.

There is no current when the switch is off.

Wood or cardboard seem not to be able to conduct electric current.

Practical Use:

see “Main Goal”.

Further thought:

Is there any voltage in the circuit even when the switch is off?
Is any current possible without voltage?

10.4. CONDUCTOR AND NON-CONDUCTOR

Main Goal:

The pupils learn about the classification of materials as good conductors, not so good conductors, and non-conductors.

Information:

Metals conduct an electric current very good. Non-metals may be moderate conductors (like ordinary water or wet wood) or bad or very bad conductors (like glass, hard rubber or quartz).

The conductivity is dependant on free electrons.

The flow of current can be equated with the flow of electrons.

(The word “electricity” comes from the Greek word “elektrum” meaning amber. Static electricity was first discovered with amber.)

Materials and Apparatus:

see suggestions - “SCIENCE OF ELECTRICITY”.
See the following chart and select a few materials to test.

Procedure:

A circuit is set up as shown in the following diagram.
The materials to be tested are connected up between the two iron nails.
A material conducts electricity when the bulb lights up.

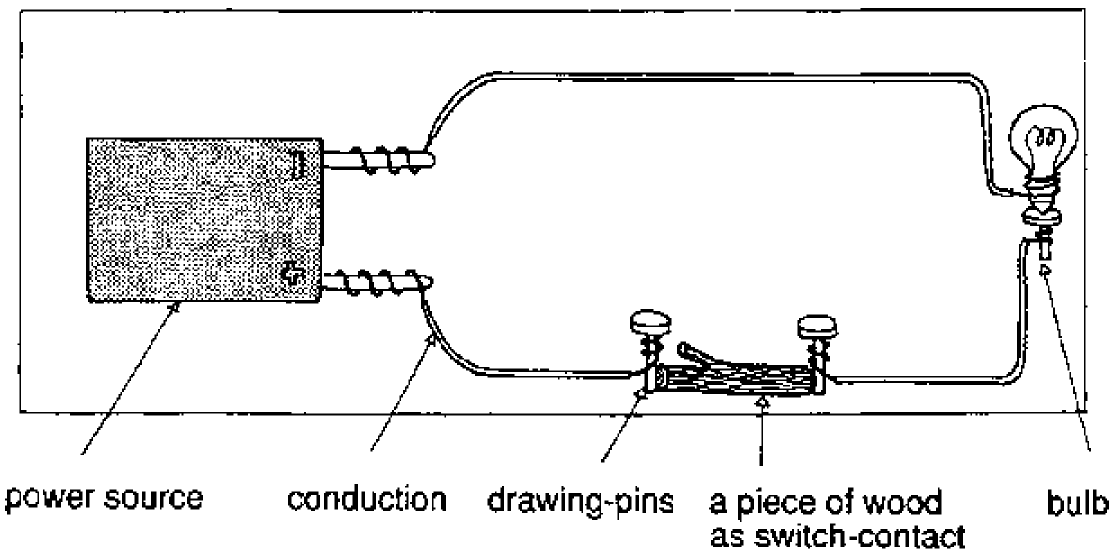

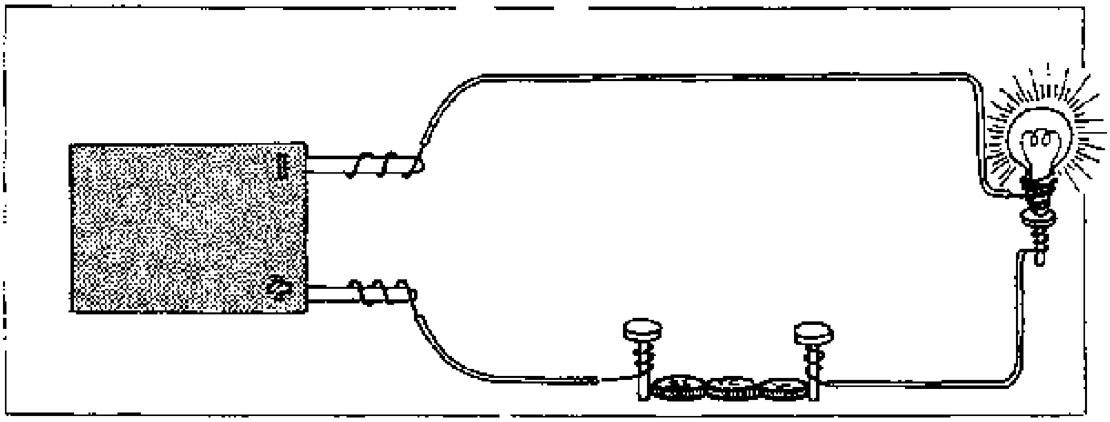

Observation:

material	conducts current	does not conduct current	conducts a little
wood		-	
glass		-	
yarn		-	
rubber		-	
paper		-	
plastic		-	
coal	+		
paper clip	+		
coin	+		
nail	+		
cigarette paper (metal foil)	+		
water			**0**
wet wood			**0**

Analysis:

It depends on the material, how good or bad current is conducted.

Practical Use:

Materials which conduct current are insulated with materials which are very bad conductors. Thus, a voltage drop, short circuit, and electro-cution are prevented.

Further thought:

Sometimes not good conduction is required, but good non-conduction. So, what kind of material is used as isolators?

10.5. SERIES CONNECTION

Main Goal:

This example teaches younger pupils the principles of a series connection, in which several consumers are connected up one after the other. The observations are not analysed in detail. Older pupils learn Ohm's law and the meaning of partial resistors.

Information:

Electric power consumers are ‘consumers’ because they convert electric power into heat power or light power. The property that enables ‘consumers’ to such conversion is called electric resistance. Circuit elements with appreciable resistance are called resistors. Bulbs are such resistors.

If several bulbs - resistors - are connected in series, they scarcely shine if at all.

This is due to the fact that the strength of the current, which is equally large at each partial resistor, drops. To calculate the current, Ohm’s law is used.

Materials and Apparatus:

see suggestion “SCIENCE OF ELECTRICITY”

Procedure:

The circuit is set up as shown in the following diagram.

a. One, then two, then three small bulbs, etc., are connected in series.

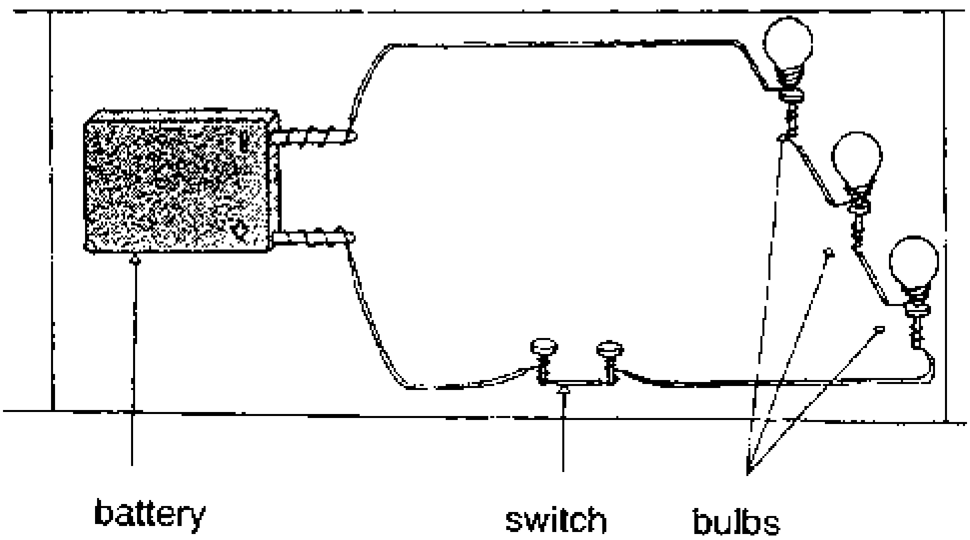

b. When the switch is closed one of the small bulbs are unscrewed then another and so on.

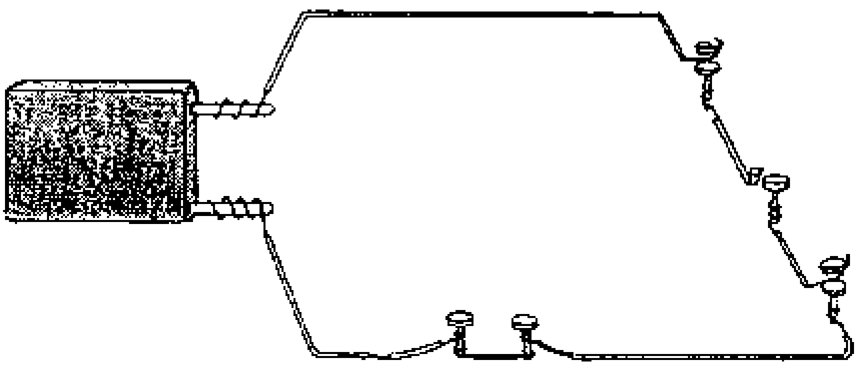

Observation:

a. The bulbs shine less brightly after every additional connection, until they finally do not shine at all.

b. If one bulb is unscrewed, all bulbs go out.

Analysis:

a. The strength of the current sinks gradually, so that it is finally not strong enough to make the bulbs light up.

b. The circuit is interrupted if one bulb is unscrewed.

This means: the bigger the resistance, the smaller the current.

Practical Use:

see “Main Goal”

Further thought:

But what will happen in case the current is not strong enough anymore to make the bulbs light up, when we take a battery that delivers higher voltage?

10.6. PARALLEL CONNECTION

Main Goal:

This example teaches younger pupils the principle of parallel connection. The observations made are not analysed in detail.

Older pupils learn Ohm’s law in combination with Kirchhoff’s law.

Information:

If two bulbs - resistors - are connected in parallel circuits, they shine with equal intensity. This is due to the fact that two or more separate circuits exist.

To calculate the current at each resistor, Ohm’s law is used.

Materials and Apparatus:

See suggestions - “SCIENCE OF ELECTRICITY”

Procedure:

A circuit is set up as shown in the following diagram.

a. The small bulbs are connected in parallel circuits.

b. When the switch is closed, the small bulbs are alternatingly unscrewed.

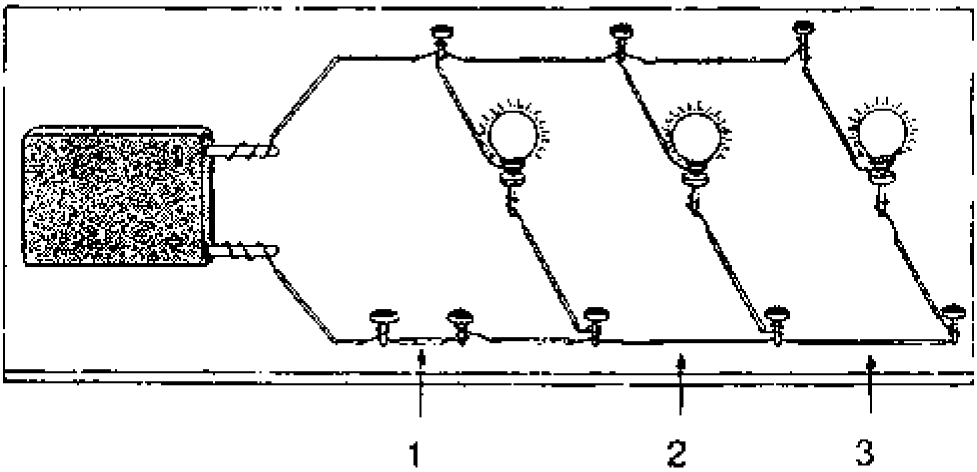

Observation:

a. The small bulbs light up with equal intensity.

b. If one bulb is unscrewed, the others still burn.

Analysis:

Every parallel connection forms an independent circuit. The current through each bulb is only dependant on the output of the battery (i.e. the voltage) and the resistance of the bulb.

Practical Use:

In all households, outlets and switches are connected in parallel circuits. The electricity meter is placed in the non-branching part of the electric power supply system. The complete amount of electric current used, runs through the meter (1st law of Kirchhoff).

Because the voltage is standard (220 V or 110 V), power (= voltage × current) times the time for which the power is used in the household is what we have to pay for:

power × time = electrical energy

The electrical energy is measured in wattseconds (ws) or kilowatthours (kwh).

Further thought:

What happens when the circuit is interrupted, e.g. at the point 1, or 2, or 3 in the drawing?

10.7. ELECTRICAL CURRENT PRODUCES HEAT

Main Goal:

This experiment demonstrates that electrical energy can be transformed into heat.

Information:

If electricity flows through a conductor, the conductor is heated. Depending on the material of which the conductor is made on the voltage, and on the current, the conductor is heated more or less. In heating instruments a special resistance wire - “constantan wire” - is used.

It does not fuse at high temperatures and has a high resistance, which is hardly dependant on temperature.

Materials and Apparatus:

See suggestions - "SCIENCE OF ELECTRICITY"
resistance wire (constantan wire)
2 iron nails
15 V battery (or several batteries connected in series)
styrofoam (wood)

Procedure:

A circuit is set up as shown in the following diagram.

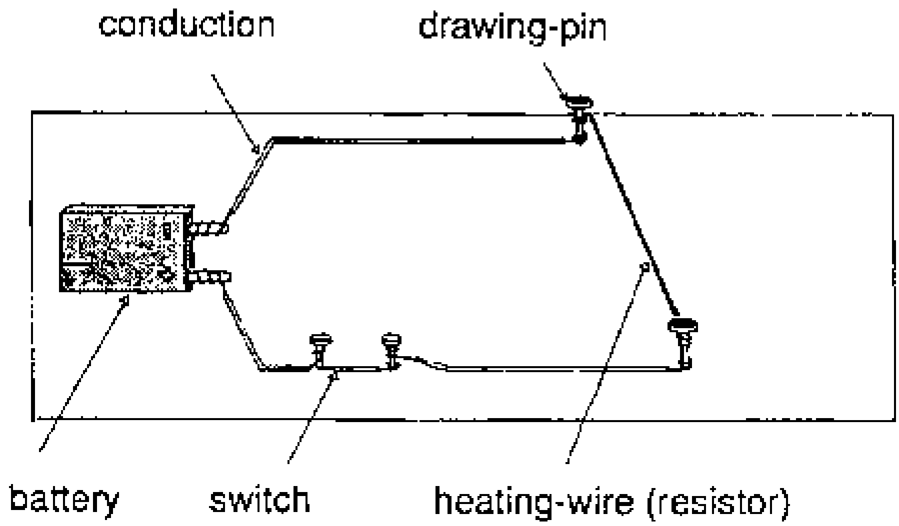

When the heating wire is red glowing, it can cut the styrofoam or singe the wood.

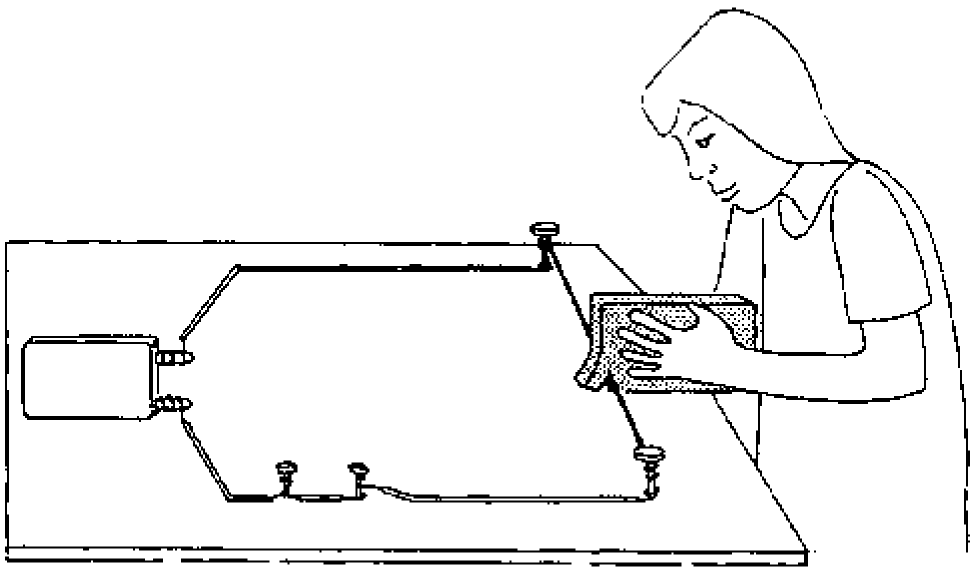

Observation:

The heating wire becomes hot, so that it cuts the styrofoam or singes the wood.

Analysis:

Electrical current produces heat in resistors or power consumers.

Practical Use:

In the household, a lot of electrical appliances are used which produce heat, e.g.:

electric heater
hot-plate
immersion heater

Further thought:

Sometimes you hear someone say that the electric current in a circuit is used up. Is it really the current, i.e. the flow of electrons, that's 'used up', or what?

10.8. THE PRINCIPLE OF AN ELECTROMAGNET

Main Goal:

The experiment demonstrates the magnetic effect of an electrical current.

Information:

A current-carrying coil has the same effect as a permanent magnet. If a non-magnetic iron core is placed in the centre of the coil, it too becomes a magnet. The magnetism is intensified by increasing the number of times the coil is wound round the core.

Materials and Apparatus:

see suggestions - "SCIENCE OF ELECTRICITY"
iron nail
light pieces of iron

Procedure:

A switch circuit is set up as shown in the following diagram.

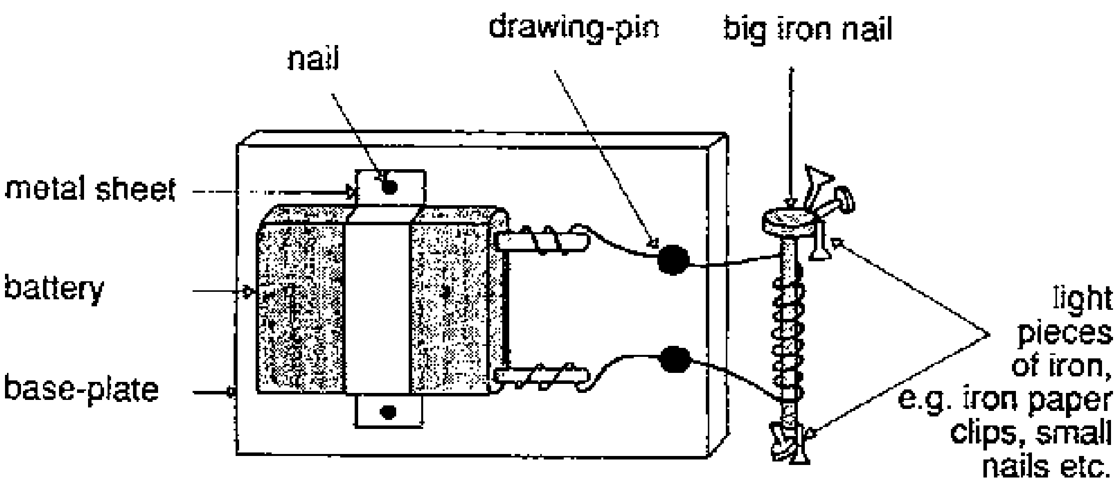

Some experiments which can be performed:

- Try to attract the lighter pieces of iron with the iron nail.
- The pieces of iron can be attracted with the current-carrying coil.
- The big iron core (nail) is placed in the coil.
- The number of times the coil is wound round the nail is increased or decreased.

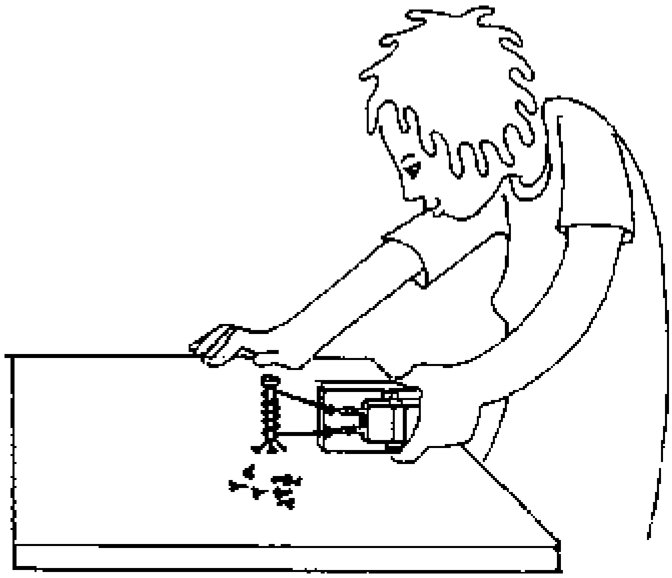

Observation:

- The non-magnetic iron nail does not attract the iron pieces.
- The current-carrying coil attracts the lighter pieces.
- The attraction is increased with the addition of the iron core.
- The attraction is increased or decreased.
- Small current means little attraction, large current strong attraction.

Analysis:

A coil with an iron core is called an electromagnet. Its attractive power is greater, the higher the number of coil windings and the larger the current An electromagnet looses almost all its effect when switched off. No current, no magnetic effect.

Practical Use:

With the help of an electromagnet, iron pieces are transported and sifted out from other metals.

Electromagnets are also used in many electrical appliances. They either close a circuit, as a bell, or interrupt the circuit, as in an electric fuse.

Further thought:

A permanent magnet (e.g. a horse shoe magnet) has a magnetic North-Pole and a magnetic South-Pole. What's about poles of an electro magnet?

10.9. THE PRINCIPLE OF A BIMETALLIC STRIP

Main Goal:

The experiment demonstrates the behaviour of a bimetallic strip when heated.

Information:

Bimetals consist - as the name suggests - of two strips of different metals, which are either rivetted or soldered together. When heated, a bimetallic strip bends due to the different expansion properties of the different metals.

Materials and Apparatus:

1 copper and 1 iron strip and 1 aluminium strip and
1 iron strip (of the same strength)
hammer
pair of pliers
alcohol burner, gas burner or a candle

Procedure:

Two metallic strips are joined by twisting their ends as shown below.

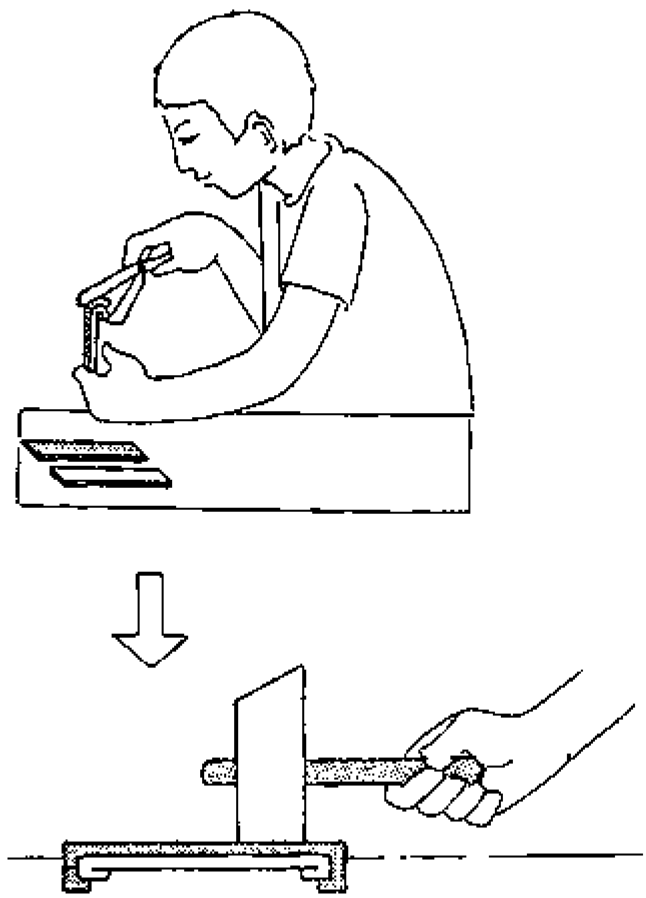

The strips are then hammered flat.

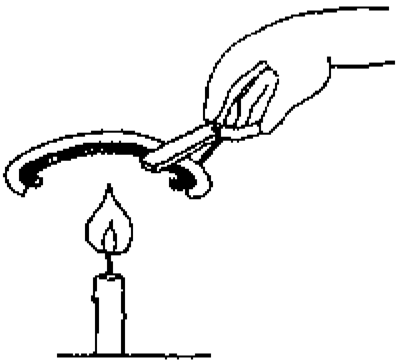

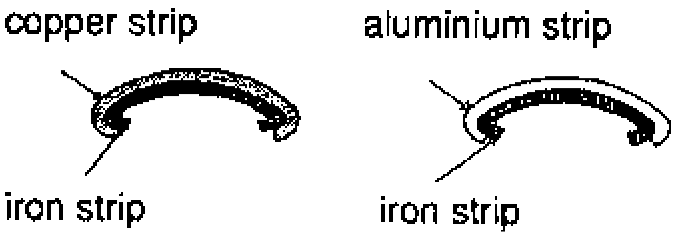

The bimetallic strip is held in a flame.

Observation:

The bimetallic strip bends when heated.

Analysis:

The copper and the aluminium strip expand more than the iron strip.

Practical Use:

Bimetallic strips are used wherever it is necessary to interrupt an electrical contact at a specific temperature.

The circuit is interrupted, when the bimetallic strip is twisted.

Thus, bimetallic strips serve in thermostats. They are used in irons, ovens, electrical fuses, refrigerators, etc.

Further thought:

How would you construct a switch (e.g. a thermostat) by the help of a bimetallic strip?

11. OPTICS

11.1. A CONVEX LENS

Main Goal:

This experiment shows the course of the rays of a convex lens or condensing lens.

Information:

Convex lenses are thicker in the middle than at the edges. Rays which are parallel to the optical axis, are refracted by a convex lens in such a way that they focus again behind the lens at the focal point. However, the marginal rays are refracted more than those rays which are closer to the optical axis.

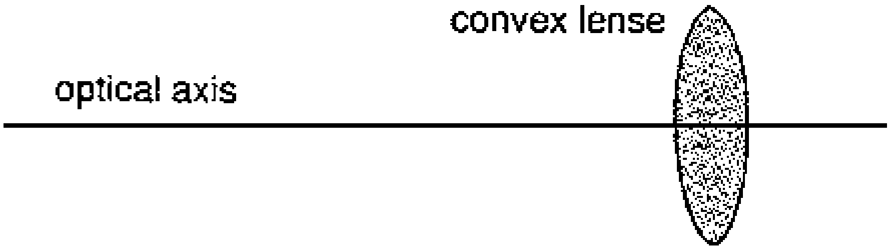

Materials and Apparatus:

magnifying glass -
(one spectacle-lens for long-sighted people)
flashlight (maybe a candle)
rack made of wire for the flashlight

Procedure:

The apparatus is set up as shown in the diagram below.
The room is darkened and the path of the rays observed.
This is possible when cigarette smoke is blown into the beam.

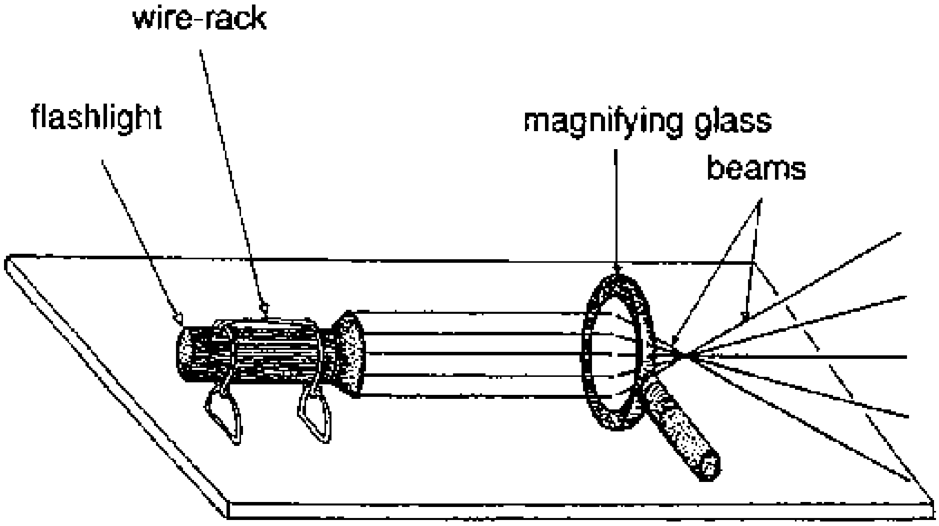

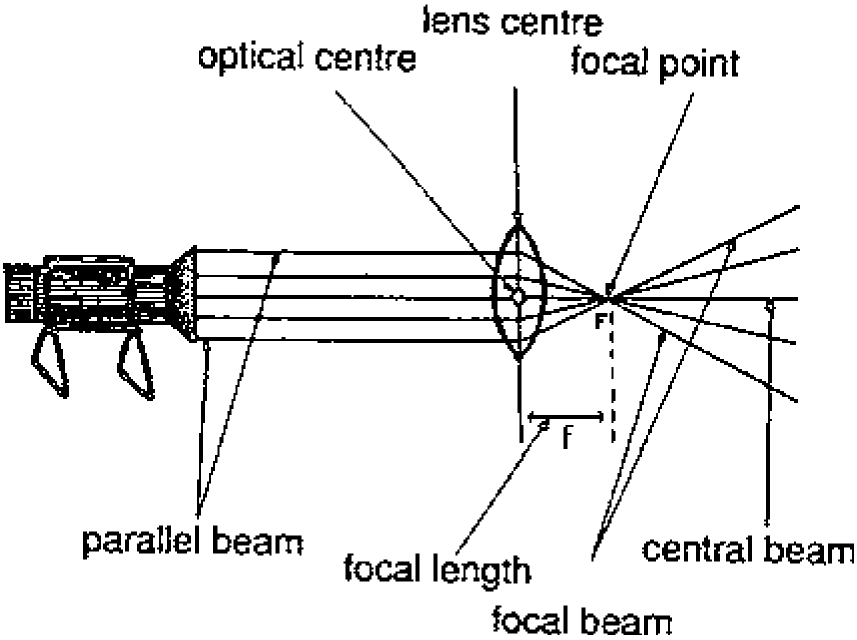

Observation:

The light of the flashlight is focused on one point behind the lens. When parallel light comes in from the right side, there can also a focal point be observed at the left side of the lense.

Analysis:

Lenses, which focus parallel light on one point are called condensing lenses or convex lenses.

The point is called the focal point.

It is situated on the optical axis.

The distance from the lens centre to the focal point is called the focal length (f).

Practical Use:

Convex lenses are used to correct long-sightedness and in microscopes, cameras, binoculars, etc.

The lens of the human eye is a convex lens.

Further thought:

Optical lenses normally are made of glass. Can one obtain the same effect (focusing of parallel light in one point) with lenses of other material?

11.2. THE BURNING GLASS

Main Goal:

The experiment demonstrates that a convex lens works as burning glass.

Information:

With a convex lens the sun's rays can be collected at the focal point (see experiment: A CONVEX LENS).

If a sheet of paper or the head of a match is held at the focal point, these materials ignite after a short while when the lens is placed perpendicular to the incoming sunlight. This is due to the fact that the energy carried by the sunlight is concentrated at the focal point.

Materials and Apparatus:

magnifying glass (one strong convex lens)
paper (match)

Procedure:

Sunlight is collected with a convex lens.
A sheet of paper or a match is placed at the focal point.
The spot of light should be as small as possible.

Observation:

The light can be seen as one small spot on the sheet of paper.

Here the paper starts to burn.

Analysis:

A convex lens can be used as a "burning glass".

At the focal point, the sun's rays and the energy carried by these rays are collected. Here, the energy concentration or energy density is so high that paper can be set on fire.

Further thought:

Why can you not get the same effect with a flash light as light source?

11.3. MAGNIFYING GLASS - VIRTUAL IMAGE OF A CONVEX LENS

Main Goal:

This experiment demonstrates a virtual image of a convex lens.

Information:

If an object is placed at the focal point or between the lens and the focal point, a real image cannot be perceived. If one looks through the lens at the candle however one can perceive a larger non-inverted image. (The eye must be at a greater distance from the lense than of its focal length.)

The image is called a virtual image and is only perceived with the eyes. It cannot be projected on the screen. The virtual image is formed when the eye follows the incoming rays backwards to the seeming point of intersection.

Materials and Apparatus:

magnifying glass -
(one spectacle-lens for long-sighted people)
candle or other objects such as flowers

Procedure:

The burning candle is placed close to the lens. The candle is observed through the lens.

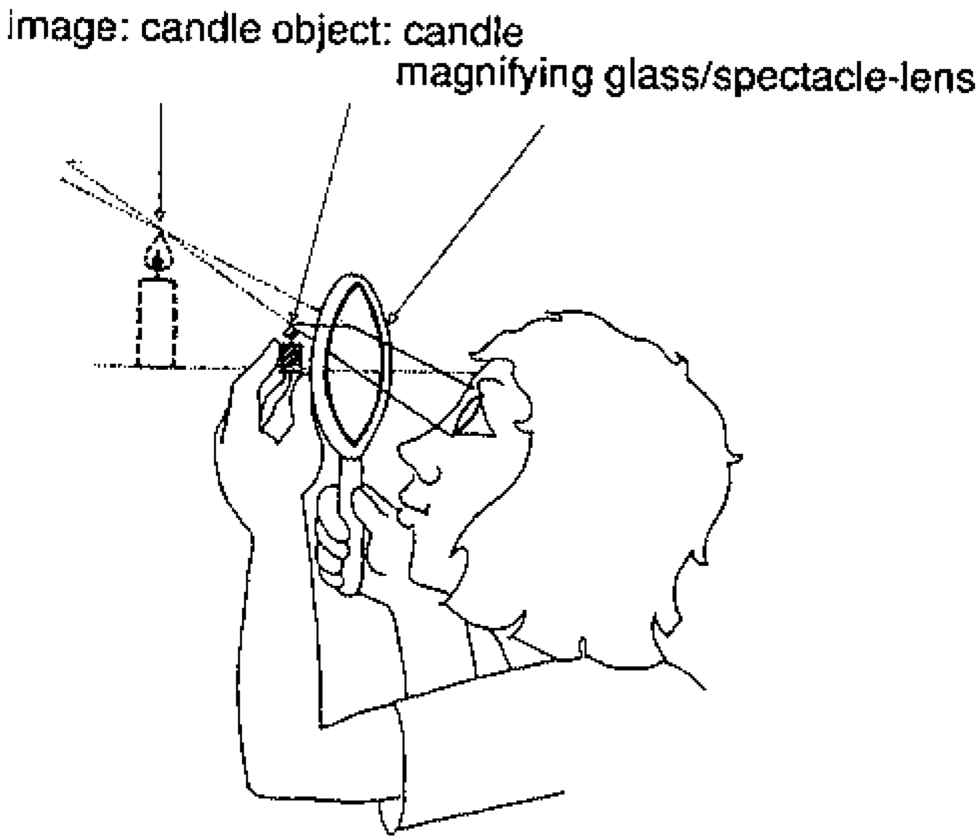

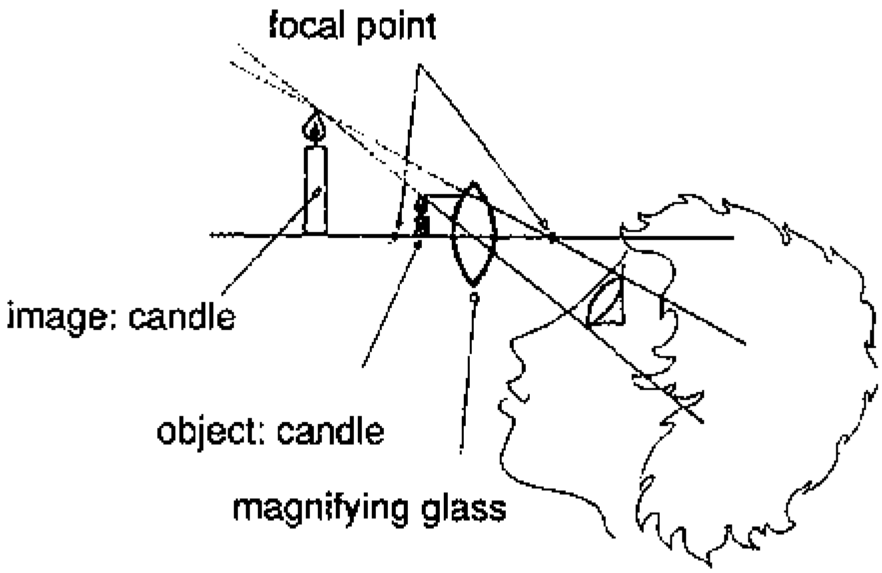

Observation:

Looking through the lens at the candle, non-inverted magnified image can be seen.

Analysis:

This image cannot be projected onto a screen. It is just the eye which perceives this imaginary or “virtual” image.

Practical Use:

A convex lens is needed by people who are longsighted.

The eyeball of a long-sighted eye is flattened. Thus, without a convex lens, the incoming rays meet “behind” the retina. The lens corrects this defect.

Further thought:

Within glass light has a lower velocity than in air. Therefore, light going through the middle of the lens, where the glass is thicker, looses more time than light going through the glass at the edge. Is this fact of importance for the image forming?

11.4. REAL IMAGES WITH CONVEX LENSES

Main Goal:

Through this experiment, images created by a convex lens are observed.

Information:

Convex lenses create images, which can be projected on a screen. They are called real images and appear upside down on the screen.

If an object is moved towards **a** convex lens, its real image moves further away from the lens and becomes larger.

If the object is located at the focal point, no real image is formed.

If the distance between the object and the lens is equal to twice the focal length, the image is the same size as the object. The distance from the image to the lens also equals twice the focal length.

Materials and Apparatus:

magnifying glass -
(one spectacle-lens for long-sighted people)
screen made of cardboard, candle,
rack made of wire or wooden rack for the magnifying glass, measuring rod.

Procedure:

The apparatus is set up as demonstrated in the diagram below. The candle is placed at one side of the lens. The screen is placed in such a way at the other side that a sharp image is obtained. When the candle is moved gradually towards the lens, the screen is moved correspondingly away from the lens.

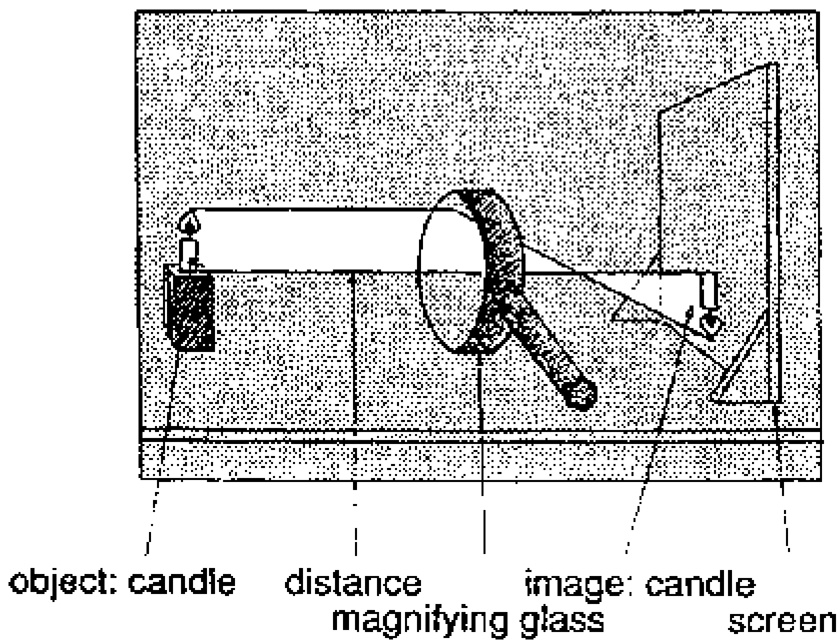

Using the measuring rod, the distance from the candle to the lens, the distance from the image to the lens, the object size and the image size are measured.

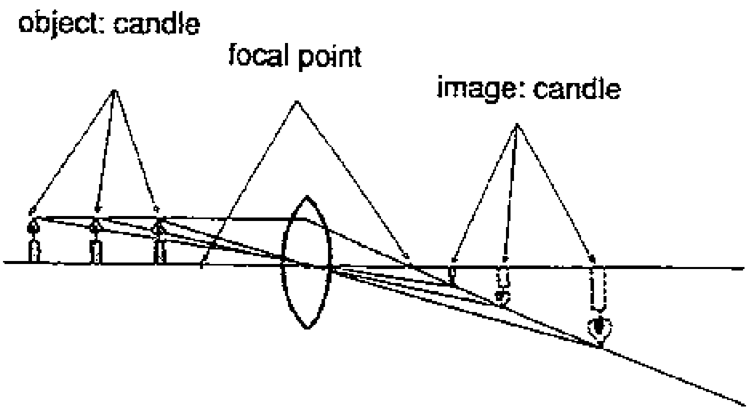

Observation:

Upside-down images are created.

The closer the candle is to the convex lens, the further away the image. At a certain distance (twice the focal length) from the lens, the object is the same size as the real image.

If the candle is placed close to the lens, no image is formed at all.

Analysis:

When the height of the object is equal to the height of the image, the distance from the candle to the lens is equal to the distance from the image to the lens and both on exactly double the focal length.

If the candle is placed at the focal point or between focal point and lens, no image can be projected.

Further thought:

When we want to get a magnified image of the object on the screen in which distance from the lens must the object be placed?

11.5. THE CONCAVE LENS

Main Goal:

Through this experiment, the course of the rays of a concave lense - diverging lens - can be observed.

Information:

Diverging lenses are thinner in the middle than at the rim.

Rays parallel to an axis are refracted by an concave lens in such a way that they are refracted off the optical axis.

If the rays are followed backwards, it seems as if they all come from one point. This point is called the “virtual focus” or “point of divergence”.

The centre ray remains at the centre. No real image is created.

Materials and Apparatus:

concave lens -
(one spectacle-lens for short-sighted people)
flashlight (or maybe a candle)
rack made of wire for the flashlight

Procedure:

The apparatus is set up as shown in the following diagram. The room is darkened and the ray path is made visible by means of cigarrette smoke or chalk dust.

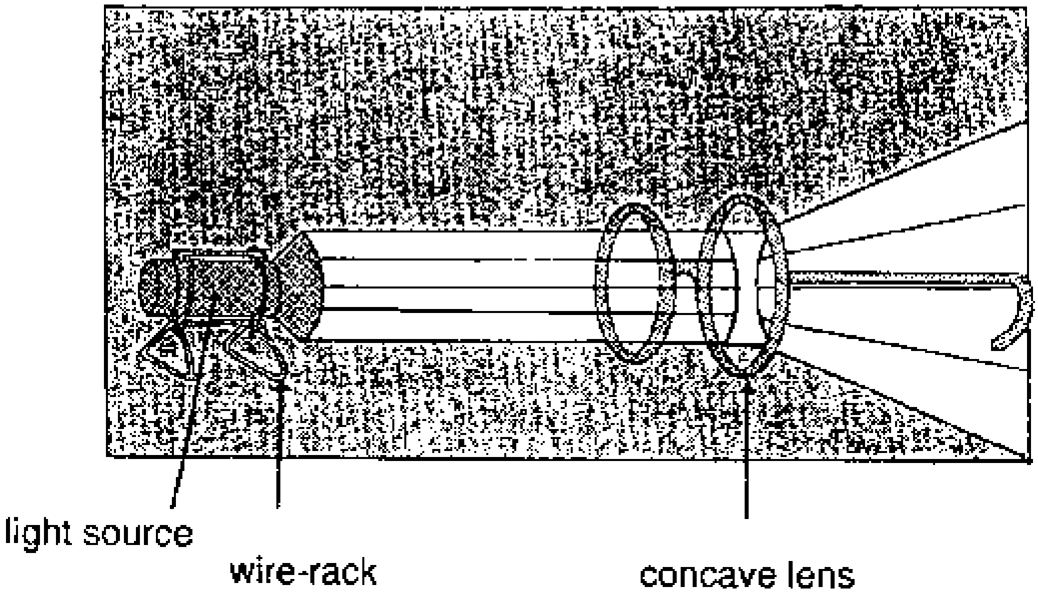

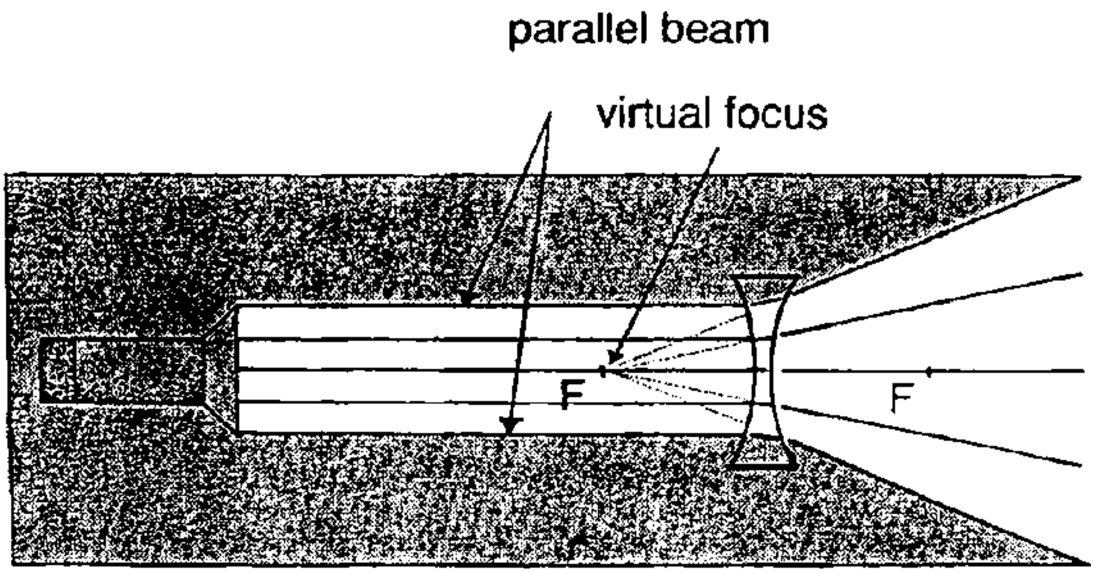

Observation:

Behind the lens, the light of the lamp is diverging in a way that makes them appear to come from a single point in front of the lens.

Analysis:

Lenses which deviate light in such a way that it is spread out or diverges are called concave (or negative) lenses.

If the refracted rays are followed backwards, it seems as if they all come from one point.

This point is called the virtual focus or point of divergence.

Practical Use:

A concave lens is used in glasses for short-sighted people, in cameras, telescopes, etc.

Further thought:

If light traveled at the same speed in different media, would glass lenses still alter the direction of rays?

11.6. VIRTUAL IMAGE OF A CONCAVE LENS

Main Goal:

This experiment demonstrates the virtual image of a concave lens.

Information:

Looking through a diverging lens towards an object, one can see a virtual, upright image. The image is always smaller than the object.

The course of rays followed by the eye is shown in a diagram.

Materials and Apparatus:

candle
concave lens -
(one spectacle-glass for short-sighted people)

Procedure:

The burning candle is placed at some distance from the lens. The candle is observed through the lens.

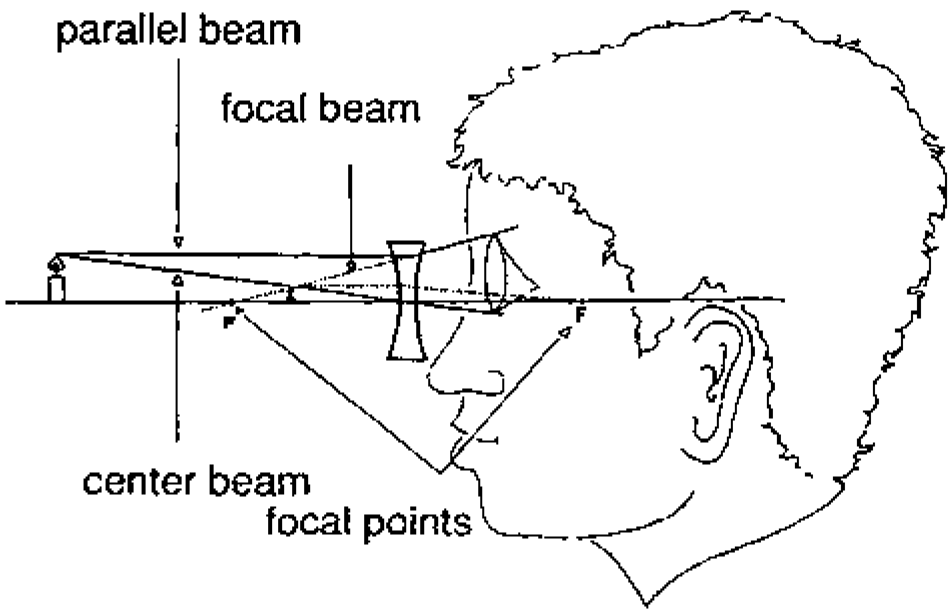

Observation:

An upright image is observed, smaller than the actual candle.

Analysis:

The image can only be observed with the eye or with a camera. It cannot be projected on a screen. For this reason it is called a "virtual image".

Practical Use:

The concave lens is needed by people who are shortsighted.
The eyeball of the short-sighted eye is lengthened.
The incoming rays focus in front of the retina.
The lens corrects the defect.

Further thought:

There are lenses that are at one side convex and at the other side concave. How do they refract the light?

11.7. PINHOLE CAMERA

Main Goal:

Using a pinhole camera, the origin of optical images is demonstrated.

Information:

A pinhole camera creates upside-down, back-to-front images.

If the object is moved away from the pinhole diaphragm, the size of the image is reduced.

If the object is moved towards the pinhole diaphragm, the image is enlarged.

A small pinhole creates a clearer image but is weaker in light intensity than a bigger pinhole.

The image is created by rays coming from every point of the object. A small number of those rays arrive at the diaphragm opening. These finally focus onto the screen as several light spots. All of these spots together form the image.

Materials and Apparatus:

candle
cardboard box (shoe or cigar box)
translucent paper, waxed paper
pieces of cardboard
pair of scissors
glue

Procedure:

One of the two small side-walls of the cardboard box is replaced by translucent paper. That's the screen where the image appears.

A hole of 4 mm diameter is cut into the other small side-wall.

Two more holes with smaller diameter (2 or 1 mm) are cut into two other pieces of cardboard. The three card-board pieces with holes are called pinhole apertures.

a. A burning candle is placed before the 4 mm aperture side at a distance of about 20 cm.

The room is darkened.

b. The image is observed. Then the 2 mm aperture is put over the 4 mm aperture. Again the image is observed. Finally the 1 mm aperture is used. The candle is moved away from and toward the apertures.

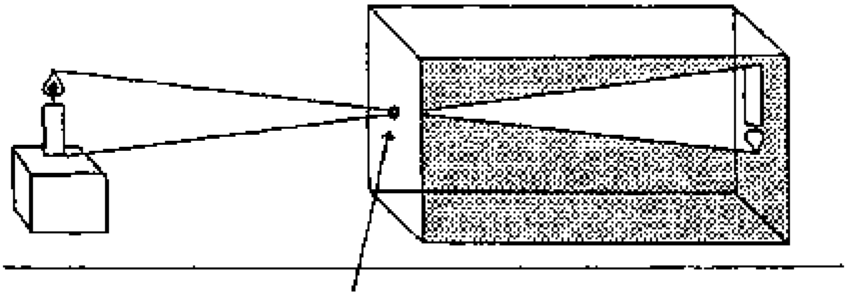

Observation:

a. The image is always turned upside-down.

b. The image becomes smaller as the candle is moved away from the diaphragm opening and bigger as it is moved in the other direction.

c. The image created by a larger aperture is of higher light intensity but more blurred than that created by a smaller opening.

Analysis:

If good optical images are desired, the aperture, light intensity, and distance of the object from the aperture have to be coordinated.

Practical Use:

In a camera a condensing lens is placed in front of the diaphragm (see experiments on condensing lenses). This provides better light exposure. The size of an opening can be changed using a mechanism called iris diaphragm.

The human eye lets light penetrate through the pupil. The pupil becomes smaller or larger depending on the intensity of the light. Upside-down, scaled-down images are produced on the retina.

Further thought:

Our optical perception system delivers upside-down-images, but we ‘see’ things upright. Isn’t that a contradiction?

GLOSSARY

ACCELERATION	: Rate at which velocity changes with time. The change in velocity may be in magnitude (speeding up or slowing down) or in direction or both.
AMINO ACID	: Chemical compounds in which a hydrogen atom in the alkyl group attached to the COOH (carbonyl) group of an organic acid is replaced by an NH_2 group. Their common chemical formula is: R-CH(NH_2)-COOH.
ANODE	: anodos - Greek: the way upwards It is the electrode which is connected to the positive pole of a voltage source. (Gives off positive ions and towards which negative ions move)
ASSIMILATION	: ad - Latin: to similis - Latin: similar Synthesis of organic compounds of indigested and digested nutrient materials, e.g. at the photosynthesis.
ATOM	: atomos - Greek: an atom, invisible The smallest particle of an element, which does not admit a further division on the basis of chemical processes.
BIMETAL	: Two different metals which are closely connected to each other
BOILING	: A rapid state of evaporation which takes place within the liquid well as at the surface.
CAPILLARITY	: The rise of a liquid in a fine hollow tube or in narrow space due to surface tension.
CARBOHYDRATE	: Organic compounds of carbon, hydrogen, and oxygen with the general formula $C_n(H_2O)_m$, e.g. all kinds of sugar, starch, and cellulose.
CATALYZER	: A substance which induces or accelerates a chemical process, however, is not affected by the reaction.
CATHODE	: katodos - Greek: the way downwards It is the electrode which is connected to the negative pole of a voltage source. (Emits electrones and gives off negative ions.)
CELLULOSE	: The chief substance composing the cell walls or woody part of plants, a carbohydrate of unknown molecular structure but having the composition represented by the empirical formula $(C_6H_{10}O_6)_x$. (polysaccharides).
CINETIC ENERGY	: Energy of motion of a body. Is proportional to the mass of the body and to the square of its speed.
CONDENSATION	: Change of state from vapor to liquid.

CONDUCTOR	:	Any material through which electric charges easily flow when subject to an applied voltage.
CONES	:	Cells which perceive light. About 120 millions are found in the retina. They are responsible for the ability to see in the night, as they work at very low light intensities.
CONSERVATION OF ENERGY	:	Experience shows that energy cannot be destroyed. The total amount of energy never changes. But it may be transformed from one form into another one.
CONSTANTAN WIRE	:	A special kind of wire which has the same resistance does not expand when heated. It is an alloy made of 60% copper and 40% nickel.
CONVECTION	:	convehere - Latin: to bring together The transmission of heat or electricity by the mass movement of the heated or electrified particles as in air, gas, or liquid currents.
CONVERGING LENSE	:	A lens that is thicker in the middle than at the edges and refrects parallel rays of light passing through it to a focus.
COTELYDON	:	kotyle - Greek: cup The seed-leaf, primary or first leaf of an embryonic sporophyte. They are part of the plant embryo in the seed. Those of peas and beans serve as food storage organs for the seedling.
CRYSTAL	:	Regular arrangements of atoms, ions or molecules in a pattern as in solid grains, sugar, salt, etc.. The regular arrangements determine the shape of the matter.
DENSITY	:	The mass (amount of matter) per unit of volume (space into which the matter is packed) density = m/v = m/v (g/cm^3 or kg/m^3) The density of solid and liquid matters is dependant on temperature and that of gaseous matters is dependant on temperature and pressure.
DIFFUSION	:	diffundere - Latin: to diffuse The gradual permeation or spreading out, e.g. of a substance through a liquid (ink through water) or of a gas or of ions.
DIVERGING LENSE	:	A lens that is thinner in the middle than at the edges, causing light rays passing through it to diverge.
ELECTROLYSIS	:	lysis - Greek: a loosening, decomposition The decomposition into ions of a chemical compound by the action of an electric current passing through the solution.
EMBRYO	:	embryon - Greek: seedling The rudimentary plant which is usually contained in seeds.

EMIT	:	emittere - Latin: to send out
ENERGY	:	A state of a body or a system of bodies that - among other characteristics - enables the body or the system to do work.
ENZYME	:	zymes - Greek: leaven en - Greek: in Any of various complex organic substances, originating from living cells, and capable of producing by catalytic action certain chemical changes.
EROSION	:	erodere - Latin: to gnaw off The process by which the surface of the earth is worn away by the action of water, glaciers, wind, waves etc..
EVAPORATION	:	Change of state at a surface of a liquid as it passes to vapor.
FERMENTATION	:	fermentare - Latin: to cause to rise The breakdown of complex molecules in organic compounds, caused by the influence of organisms; such as yeast or bacteria or enzymes.
FORCE	:	Any influence that can cause a body to be accelerated.
FREEZING	:	Change of state from the liquid to the solid form.
FRICTION	:	A force that arises to oppose the motion or attempted motion of a body pass another with which it is in contact.
INDICATOR	:	indicare - Latin: to show A substance used to indicate by change in colour the acidity or alkalinity of a solution.
INERTIA	:	The sluggishness or apparent resistance a body offers to changes in its state of motion.
INSULATOR	:	Any material through which charge resist flow when subject to an applied voltage.
ION	:	ionos - Greek: to move Electrically charged atoms or molecules, formed by the loss or gain of one or more electrons.
MAGNET	:	An iron-bearing matter which possesses the property of attracting iron.
MAGNETISM	:	The property or quality or condition of a magnetic field.
MASS	:	Quantity of matter in a body. Becomes manifest due to a body’s inertia and/or due to the property of being attracted by another mass in its environment (heaviness).
MELTING	:	Change of state from the solid to the liquid form.
MIXTURE	:	An aggregate of two or more substances which are not chemically united and exist in no fixed proportion and do not lose their individual characteristics.

MOLECULE	:	The smallest particle of any substance that has all its chemical properties. Atoms combine to form molecules.
MONOSACCHARIDE	:	A carbohydrate not decomposable by hydrolysis; simple sugar such as glucose, fructose, etc..
OSMOSIS	:	osmos - Greek: an impulse, a pushing The tendency of a fluid to pass through a semipermeable membrane into a solution of lower concentration, so as to equalize concentration on both sides of the membrane.
OSMOTIC PRESSURE	:	The pressure caused by osmosis.
PARTICLE	:	Any body that is projected by some force and continues in motion by virtue of its own inertia.
PHLOEM	:	phloios - Greek: inner bark Bast-tissue; the soft bast of vascular bundles, consisting of sieve-tube tissue. Its purpose is to transport proteins and minerals.
PHOTOSYNTHESIS	:	phos - Greek/Latin: light synthesis - Greek: putting together Carbon assimilation, requiring the presence of chloroplasts and light, and consisting in synthesis of carbohydrates from carbon dioxide and water.
PHOTOTROPISM	:	phos - Greek/Latin: light tropein - Greek: to change A bending towards light.
POLYSACCHARIDE	:	polys - Greek: many saccharum - Latin: sugar Any of a group of carbohydrates that decomposes by hydrolysis into more than three molecules of monosaccharides. For instance cellulose, starch, etc..
POWER	:	Time rate of work: $\text{power} = \frac{\text{work}}{\text{time}}$
PRESSURE	:	Ratio of the amount of force per area over which that force is distibuted. $\text{pressure} = \frac{\text{force}}{\text{area}}$
PURE SUBSTANCE	:	It is a substance which cannot be further separated on the basis of physical processes.
RADIANT ENERGY	:	Energy that travels in the form of electromagnetic waves through space without needing a medium. When it meets an absorber it is transformed into thermal energy. On the other hand, the thermal energy of a radiating body is transformed, at the instant of radiation, into voliant energy.

REFLECT	:	reflectare - Latin: to mirror
RODS	:	Cells which perceive light. About 6 milliosn are found in the retina of vertebrate animals. They serve to perceive light and the exact recognition of details.
SPEED	:	Distance traveled per time.
SPROUT	:	Usually the above ground part of a plant with the leaves, the buds, genital organs (e.g. blossoms).
STARCH	:	A polysaccharide which is insoluble in water. It consists of the two components amylose and amylopectin.
SURFACE TENSION	:	Tendency of the surface of a liquid to contract in area and thus behave similar a stretched rubber membrane.
SURFACE TENSION	:	Tendency of the surface of a liquid to contract in area and thus behave similar a stretched rubber membrane.
THERMAL ENERGY	:	Internal energy a body possesses due to the random motion of its molecules. The faster the motion, the higher the thermal energy of the body.
VASCULAR TISSUE	:	Specially modified plant-cells, usually consisting of either tradual or sieve cells, for circulation of sap.
VELOCITY	:	Speed of a body but with specification of its direction of motion.
WORK	:	Product of the force extended and the distance through which the force acts.
XYLEM	:	xylon - Greek: wood Lignified portion of vascular bundle, which is found all over the plant. Its purpose is to transport mineral salts and water sucked up over the roots.

GTZ

Deutsche Gesellschaft für Technische Zusammenarbeit (GTZ) GmbH
Dag-Hammarskjöld-Weg 1+2 · D6236 Eschborn 1 · Telefon (0 6196) 79-0 · Telex 407 501-0 gtz d

The government-owned GTZ operates in the field of Technical Cooperation. Some 4,500 German experts are working together with partners from some 100 countries in Africa, Asia and Latin America in projects covering practically every sector of agriculture, forestry, economic development, social services and institutional and physical infrastructure. - The GTZ is commissioned to do this work by the Government of the Federal Republic of Germany and by other national and international organizations.

GTZ activities encompass:

- appraisal, technical planning, control and supervision of technical cooperation projects commissioned by the Government of the Federal Republic of Germany or by other authorities

- advisory services to other agencies implementing development projects

- the recruitment, selection, briefing and assignment of expert personnel and assuring their welfare and technical backstopping during their period of assignment

- provision of materials and equipment for projects, planning work, selection, purchasing and shipment to the developing countries

- management of all financial obligations to the partner country.

Tailor-Made Textbooks

A Practical Guide for the Authors of Textbooks for Primary Schools in Developing Countries

Marie Châtry-Komarek

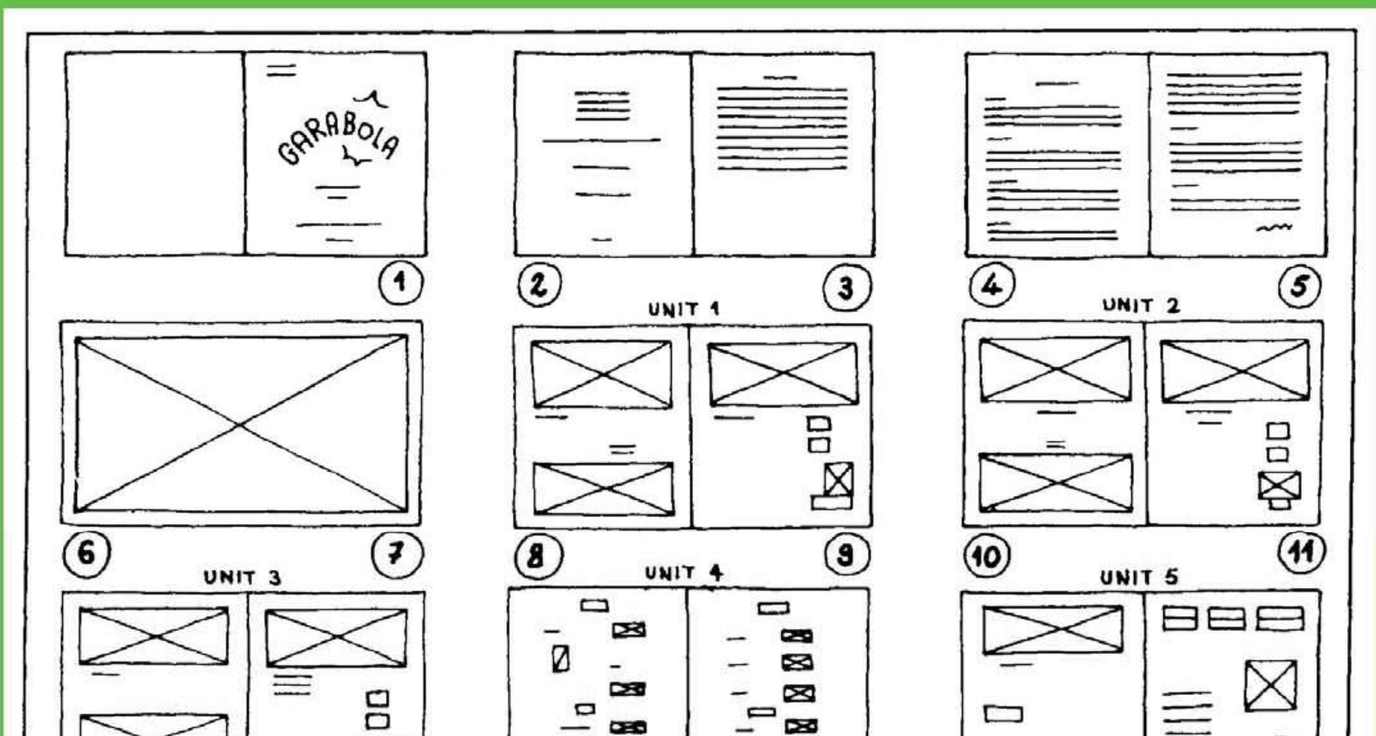

CODE Europe
Oxford
1996

Published in Association with Deutsche Stiftung für internationale Entwicklung (DSE), Bonn

Originally published in 1994 as *Des Manuels Scolaires sur Mesures: Guide pratique a l'intention des auteurs de manuels scolaires pour le primaire dans les pays en développement.*

ISBN 0 9528651 0 6

A CIP catalogue record for this book is available from the British Library

Published by

CODE Europe
The Jam Factory
27 Park End Street
Oxford OX1 1HU
UK

Registered Charity No: 1021346

Illustrations: Vincent Randriantsoa
English Translation: Lynne Jagau
Design & Production Consultant: Adrian Bullock

Typeset, printed and bound in Great Britain by Alden Press, Oxford.

Contents

Acknowledgements

I would like to thank everybody who helped me devise and write this guide, and produce the layout.

First of all I must thank Ramiandrasoa Rajhonson, who has helped me throughout, and provided many ideas which have helped to enrich this book in several ways.

My heartfelt thanks go equally to all my colleagues in the German-Malagasy Tef'Boky Project, the authors of the Malagasy reading and writing books *Garabola* and *Tongavola,* quoted time and time again in this guide, in particular Narison Andriamialijaona, Randimby Rafaralahy, Lucie Aimée Raharinorombola and Jules Ranaivoarisoa; without their ideas and comments, and the dogged determination they displayed from 1986 to 1993, this guide would certainly never have been written.

I would also like to thank everybody who went to the trouble of reading the manuscript and making many valuable suggestions, in particular:

Guy Berger, University of Paris VIII

Herbert Bergmann, German Institute for International Pedagogical Research, Frankfurt am Main

Gustave Chené, Consultant to the World Bank's CRESED project in Madagascar

Rémi Clignet, Orstom

Marcel Crahay, University of Liege

Carmelle Denning, International Book Council, London

Sakhevar Diop, World Bank, Washington D.C.

Annick Dumont, Antananarivo

Gisela Frommer, GTZ, Eschborn

Utta von Gleich, Institut für Iberoamerika-Kunde, and the University of Hamburg

Waltraud Heidenreich, GTZ, Eschborn

Ingrid Jung, Ministry of Education, Lima

Claude Rabenoro, Editions Tsipika, Antananarivo

Roland Ramahatra, member of the Economic and Social Recovery Committee, Antananarivo

Aristide Velompanahy, former Minister of Education and member of the High Authority of State in Antananarivo and

Carol Warlop, Swiss Cooperation, Antananarivo.

Many, many more people have given me their support and assistance in one form or another; my warmest thanks go to all of them.

Marie Châtry-Komarek
Antananarivo, April 1993

Introduction

Producing textbooks has proved to be the best way to boost the effectiveness of education at primary level in many developing countries.[1]

Yet, the book situation has deteriorated steadily over the last fifteen years, to the point where today many pupils have no books at all. A recent study covering eight African countries[2] points to the situation in rural schools being the most serious: frequently only one or two copies of a book are available per class. The shortage of textbooks has become so severe that it is currently seen as the major obstacle to progress in primary education in sub-Saharan Africa[3].

Naturally great efforts have been made to remedy the situation. Numerous governments have tried to obtain technical or financial assistance to enable them to provide their pupils with enough textbooks of a suitable quality[4]. But the results have often been disappointing; most education projects implemented to this end have run into difficulties of scale, the most common being

- the almost total absence of any national textbook policy which could be used to identify the main shortcomings in the supply of school books in each country, and which would contain precise recommendations on how to remedy these;

- the major deficiencies in the education system; in particular the upstream and downstream services, i.e. curriculum design and pre- and in-service service teacher training;

- the frequent shortage of national authors with the skills required to devise books that are specifically tailored to the needs and the possibilities of the country;

- a general lack of the national structures and/or the publishing capacity needed to ensure a regular and general supply of books;

- the lack of an overview of the publishing chain: in some cases, there is no serious preliminary needs analysis, while in others the difficulties of distributing materials to rural areas have not been taken into consideration.

The first reasons advanced to explain the current lack of textbooks tend to be social, economic and political in nature. Our attention is drawn to the explosion in enrolment after universal primary education was introduced in the 1960s, to the austerity which forced many governments to cut non-salary costs in the education sector in the 1980s and to the fact that the education budget is considered to be of only secondary importance in many developing countries and by the international aid community[5].

We should add that there are also technical reasons. It is extremely difficult to devise a strategy and the pertinent activities which would guarantee a regular supply of quality textbooks nationwide, and ensure that teachers and pupils put these to the best possible use. The efforts of international and bilateral aid organisations illustrate this difficulty to some extent: some fifteen years ago, attributing the shortages of textbooks to the lack of production capacity, they set up printing houses here and there, which rarely work at full capacity, at least partly because there are so few manuscripts worth printing. Today, these aid agencies appear hesitant to decide between the two main priorities that face them: providing a short-term response to the urgent demand for textbooks by investing in existing human resources, primarily authors, or responding in the medium or long term by establishing a full publishing chain along the lines of the model which has proved its worth in industrialised countries, but which would often mean creating entirely new structures in developing countries.

The nature of available literature on textbooks in developing countries also reveals the complexity of the subject. We find analyses of the status quo, which are always instructive and unanimous in their conclusion that there is an urgent and massive demand for books, particularly in sub-Saharan Africa. We also find interesting proposals as to how to remedy the situation, but these tend to intimidate the reader with their inflated expectations. The people who actually work in the field are conspicuously silent in contrast, despite the wealth of experience they must have in the production of textbooks[6]: there is little material which describes innovative experiences vis à vis textbooks, and even less on the process of designing these books.

This is a regrettable state of affairs. Firstly, teams of authors are too often forced to gain the same experience time after time, repeating the errors of those that have gone before them - reinventing the wheel as it were; analyses alone, however important they may be in order to remedy the textbook problem in developing countries, are not enough. It is imperative that they be supplemented by data collected on the spot, in practical textbook development work.

This publication is first and foremost a testimony which we hope will go some way to help fill the gap. It reflects our experience gained in the course of more than fifteen years working in GTZ[7] education projects devoted to developing textbooks for primary schools. It lifts the curtain on two textbook workshops, the German-Peruvian Bilingual Education Project[8], whose overall goal was to design didactic materials for all subjects and all classes at primary level for native Quechua and Aymara speakers (1977-1990) and the German-Malagasy Tef'Boky Project, which trained authors and devised textbooks in the national language for primary schools (1986-1994).

It should be noted that this book is not a case study. The specific experiences mentioned are used primarily to illustrate explanations which might otherwise be overly abstract. It is primarily a general interest publication for all those responsible for supplying high-quality textbooks to primary schools in developing countries. And above all it is a guide for authors of these books, all of whom should be able to find valuable information here, although it should be of most use to “apprentice authors” and those who have not had the benefit of an in-depth training in publishing. The points picked up in this book are those that in our experience constitute the commonest stumbling blocks. The contents can be broken down into two rough categories.

General Information

The first two chapters are dedicated to general information. Chapter 1 looks at work relating to the production of textbooks in industrialised countries and at recommendations for developing countries, to enable authors to identify the nature of the textbook production system within which they operate, and the duties which will fall to them.

Chapter 2 looks at the skills and attitudes required by authors, and at the tools which will allow them to preserve group dynamics while enhancing the quality of the individual contributions.

This is background knowledge which we consider indispensable for all those involved in the development of textbooks. We should point out that the information contained in these chapters cannot be harnessed directly by authors in their day-to-day work, unlike the other chapters which do give detailed instructions that can be put into practice immediately.

Detailed, Step-by-Step Description of How to Produce a Textbook

The rest of the guide covers the work involved in writing textbooks in developing countries, from the preliminary research to the preparation of a pilot version, ready to be printed.

What is unique about the approach taken here is that activities are described in chronological order. It is a sort of guide which takes authors through the process step by step, from forming a working group to submitting the final manuscript to the printer. In this we differ from other publications which look at this topic and then go on to analyse the various aspects of books, without aiming to follow every detail of the work of the authors[9].

The topics tackled in the following chapters are numerous and sometimes complex. They should be relevant for the production of textbooks for primary level regardless of the subject or language in question, but authors of materials designed to teach reading and writing - particularly those working in a national language - will find information which specifically addresses them.

We would like to emphasise that, in spite of the number of points tackled, this work cannot be considered exhaustive, firstly because it is based on specific experience, which automatically makes it subjective and incomplete, secondly because it looks primarily at authors in developing countries and attempts to meet their particular needs[10], and finally because the development of a textbook involves numerous different disciplines which cannot be dealt with extensively within the scope of any one publication. This work cannot thus be anything other than incomplete, and certain aspects have even been voluntarily omitted: we do not go into any details which refer too specifically to any one discipline, such as textbooks for a second language or foreign language, nor do we look at things which cannot under any circumstances be the duty of the authors, or those which cannot be considered a priority in the current crisis facing numerous developing countries. The voluntary omissions include

- 4-colour printing
- Planning and managing projects for the mass production of textbooks
- Distribution strategies
- Teacher training to enable teachers to put a new textbook to the best possible use.

It will probably not always be easy to read this guide. Some authors will be somewhat discouraged by the scope and complexity of the work described, others will begin to worry about the feasibility of the undertaking, while still others will be irritated by the inevitable gaps. We would like to encourage those feeling discouraged, doubtful or dissatisfied, and point out that this guide was written, edited and published in a developing country, using precisely the inputs generally at the disposal of textbook projects in developing countries[11]. It can thus be considered a real life demonstration that the work described between these covers is indeed feasible. In terms of the outer appearance, this book cannot claim to compete with the remarkable publications on the same topic which have been published in industrialised countries. The contents, on the other hand, ought to be better adapted to the target group, even if they sometimes appear somewhat unorthodox to specialists from industrialised countries: the work described here is both necessary and sufficient to allow authors who do not yet have much experience to produce high-quality textbooks for and in developing countries.

This book cannot take the place of either practical experience or a long-term training course. We hope, nevertheless that the approach presented here, and the examples given will be instructive and useful. We equally hope that this testimony stimulates those working in the field, and encourages them to publish their own experience, which would be an invaluable contribution to the search for ways to overcome the current shortage of textbooks in developing countries.

Using this Guide

We entitled this book “A Practical Guide” because we intended it to be a genuine tool to assist textbook authors. To ensure that it is used as such, here are a few pointers which should help you find your way around the book and locate the information you need with ease.

Chapter Topics

The basic structure of every chapter is identical, i.e.

- A summary which puts the work in context and underlines the essentials

- A description of the work involved in this particular phase, as precise as possible and in chronological order as far as possible

• Illustration of the main body of the text, generally in the form of boxes referring to experience gained in producing reading and writing books in Malagasy within the framework of the German-Malagasy Tef'Boky Project already mentioned. For reasons of clarity we have decided to concentrate on *Garabola,* the first book to be produced in this series, which we will present in more detail below.

• Notes at the end of the chapter

• Some suggestions for further reading which can be followed up by anyone interested in going into the subject in more depth

• A systematic resume of the ground covered in the chapter.

Text Markers

Apart from the first two chapters, you should read every chapter bearing in mind the order in which work should be performed; a number of text markers will help you find your place, i.e.

• The chapter title at the top of each left-hand page serves as a rough guideline.

• A running head at the top of each right-hand page gives you your bearings more exactly.

• A telegram-style summary of the most important points can be found in bold at various points in the text.

• An index at the back of the book allows you to look up individual points, check information or rapidly find precisely the information you need.

How to Get the Most out of this Book

This guide can be said to pursue a two-fold goal: the first two chapters aim to give textbook authors the basic information they need to start work, i.e. to train them all be it in a very rudimentary fashion; the second part is designed as a guide for textbook production.

As a result of this dual goal - training and production - the guide comprises different sorts of texts. Firstly it presents general information which the reader should assimilate if possible. Secondly it gives detailed advice similar to a user's manual, which is far too compact to be memorised.

This explains why it is not advisable to try and read the book from cover to cover at one sitting. Neither, however should you merely dip into it from time to time. We recommend using the book as follows to ensure you get the most out of reading it:

• Read the first two chapters carefully, more than once if necessary, as an introduction to the problems of textbook production and to the layout of this guide.

• Read through chapters 3 to 7 rapidly. This is crucial to enable you to find the detailed information you need later.

• Consult the book throughout the process of producing a textbook as and when required to check information, or read in more detail about a specific point. You can only consult the book properly if you can put the specific information into the overall context.

These different approaches will help the reader extract a maximum of information from the book, and will help enhance the quality of the textbooks he or she is responsible for producing - and that is our aim.

Reference Material

In this book we will make frequent reference to the didactic materials produced by the German-Malagasy Tef'Boky Education Project; particular importance is attached to the *Garabola* set of materials designed to teach reading and writing in Malagasy.

For reasons of clarity, we will outline the main features of the pilot version and the revised version below.

Garabola, pilot version

Published in 1988

Authors:

- Narison Andriamialijaona
- Randimby Rafaralahy
- Stefanoela Rakotodrainy
- Jules Ranaivoarisoa

The set

- 3,000 copies of 1 reading book, printed in two colours, 80 pages, 240 x 170 mm, saddle stitched with two staples

- 3,000 copies of 1 writing book, printed in black, 240 x 170 mm, saddle stitched with two staples

- 100 copies of the teachers' guide, photocopied, 196 pages, 297 x 210 mm, spiral binding.

The reading book contains

- Three lessons on the vowels, **o**, **i** and **a**

- 18 lessons on the 16 consonants and the vowels **e** and **y**; every four lessons two pages to read to consolidate what has been learned

- 16 pages of supplementary reading.

The book was printed in two colours to make it of a comparable standard to a book for learning French as a foreign language which had just been published in 4-colour, and which was being distributed nationwide at the time.

The writing book contains

- 10 pages of preparations

- 3 pages of writing for each of the 21 letters of the alphabet, following the same order as the reading book

- 2 pages of revision, corresponding to the consolidation reading

- 3 times 2 pages of evaluation, which correspond to the Christmas, Easter and summer examinations.

The teachers' guide contains

- 20 pages of general information on the subject “Malagasy” and the material

- A 12-page first part, which corresponds to the work of the first two weeks of the school year for the pupils in this class

• A 160-page second part, containing a real script for all elocution, reading and writing classes scheduled for the year

• One glossary of the principal technical terms used in the guide.

Garabola, revised version

Published in 1991

Authors:

• Narison Andriamialijaona
• Marie Châtry-Komarek
• Randimby Rafaralahy
• Jules Ranaivoarisoa

The set

• 450,000 copies of 1 reading and writing book, printed in black, 96 pages, 240 x 170 mm, saddle stitched with two staples

• 17,000 copies of the teachers' guide, printed, 212 pages, 297 x 210 mm, spiral binding.

As regards the essential pupils' materials, the main difference between the pilot version and the revised version of *Garabola* is that the separate writing book was dispensed with.

The final version of the book is thus intended as a tool for both reading and writing.

With the exception of the first three lessons, which focus on learning the vowels, the presentation of all chapters is identical:

• 2 pages for reading
• 2 pages for writing.

Although the basic layout of the revised teachers' guide is the same as the pilot version, i.e. detailed instructions for each of the speaking and listening, reading and writing lessons scheduled for the year, fundamental changes were made as regards visual presentation.

Notes

[1] Cf. Heyneman, S.P. et al *Textbooks and achievement. What we know.* Washington D.C.: World Bank, 1978.

[2] Cf. Buchan A. et al *Etudes sur le secteur du livre en Afrique,* p. 17. Washington D.C.: World Bank, 1991.

[3] Cf. World Bank *Education in Sub-Saharan Africa,* p. 42. Washington D.C., 1988.

[4] Between 1965 and 1983, for instance the World Bank helped finance 48 projects which tackled the preparation, supply and distribution of textbooks; the proportion of textbook projects, which accounted for 6% of all education projects in 1974, had risen to 43% of the total by 1983. Cf. Searle B. The provision of textbooks by the World Bank. In: Farrell, J.P. and Heyneman, S.P. *Textbooks in the Developing World,* p. 17. Washington D.C.: World Bank, 1989.

[5] In 1989 only 23% of international aid went to the social sector, and only 7% of the aid pledged to the education sector went to primary education. Cf. United nations Development Programme. *Human Development Report,* p. 8. New York, 1991.

This percentage is all the more surprising since the importance of primary education and textbooks is recognised. The need to invest in author training and in the production of textbooks specially tailored to the needs and abilities of those concerned should long have been accepted as a self-evident fact and been elevated to a priority of international aid.

[6] In 1985 86 languages were recorded as being used in instruction in African primary schools. Cf. UNESCO. *Les langues communautaires africaines et leur utilisation dans l'enseignement et l'alphabétisation.* Dakar, 1985. In spite of the absence of any systematic documentation of the teaching materials produced in each of these languages it is safe to assume that a not inconsiderable number have been produced over the last twenty years.

[7] Deutsche Gesellschaft für Technische Zusammenarbeit (GTZ) GmbH (German Technical Cooperation).

[8] The experience gained in this project as regards the production of reading and writing books in Quechua has been presented in a Spanish publication. Cf. Châtry-Komarek M. *Libros de lectura para niños de lengua vernácula.* Eschborn: GTZ, 1987.

[9] At this point we should mention Richaudeau F. *Conception et production des manuels scolaires.* Paris: UNESCO, 1979 which we will refer to at several points in the course of this guide.

Although his method is not the same as ours, we would recommend this publication to all teams of authors of school materials in developing countries as one of the best works of reference currently available.

[10] It would be unthinkable in a book aimed at a European or North American audience not to dedicate a significant amount of space to colour printing, but we consider this too expensive for most developing countries, and thus of only secondary interest.

[11] We refer to the first French version published in Madagascar in 1993.

Getting Down to Basics

Who decides to produce a new textbook? What steps must we take to produce it systematically? Who is responsible for preliminary research? Who produces the concept? How much time is needed from the finalisation of the concept until the finished book is distributed to schools? Who interfaces with the graphic artist? And with the printer?

These are a few of the questions facing first-time authors, and are probably the questions most likely to cause headaches for those of you who have already produced several books without having been specifically trained on the job. You may feel that you are unable to pinpoint the weaknesses of your own products, and thus improve them. To answer these questions, we will start by looking briefly at the various steps involved in producing a textbook, before going on to look at the respective responsibilities of the agencies and individuals involved in industrialised countries and in developing countries.

Why should we look at the various production systems, you may ask. Not to pronounce a value judgement, but to give you a framework of reference. Firstly we will look at the procedure adopted by major publishing houses to produce works that are competitive in terms of quality and price, and only then will we go on to identify the special nature of the production process in developing countries, and thus to deduce your responsibilities as authors.

This chapter, which contains general information and ideas, differs from the subsequent chapters which give precise descriptions of the steps involved in producing a textbook. We suggest nevertheless that you read it carefully since this will allow you to situate the various individual steps described later in the book within the context of the overall process.

> **Try to become familiar with the various steps in the publishing chain, since this will allow you to identify the special features of the production system within which you operate, and to pinpoint your own role within that system**
>
> **A private publishing house accompanies its “baby” every step of the way, until it is in the hands of the user**

1. A Textbook is Born

We term the collection of operations leading from the idea to the production and distribution of a book - in the case in hand from the textbook publication project to the pupil - the “publishing chain”.

While it is true to a degree that the steps in the publishing chain are always identical (every book is planned, designed, produced and distributed in that order), as we will see below the procedure adopted does vary, and the differences are important.

The Chain at Commercial Publishers

In industrialised countries, textbooks are generally produced by private publishing houses, which are guided by the profit motive; the various steps making up this commercial production style are systematically organised. Since it is important for you to have a thorough understanding of the work involved, we will firstly explain this work, then illustrate it and finally summarise what you have learned.

Preliminary Research

A market analysis is always conducted before work starts on a textbook. The publisher only decides to produce a book once he is certain that there is a demand for the product, i.e. once he has identified a shortage of textbooks in schools for a particular subject or when changes to a curriculum mean that new books will be required.

The Concept

Having decided to go ahead and produce a textbook, the publisher moves on to the conceptual phase. He firstly defines his pedagogical, technical and financial criteria, and then decides on the sequence in which the content matter will be presented and on the physical and design features of the book (including the format, number of pages, number of illustrations and their format, and the layout of the text and illustrations on the page).

At the end of this phase the publisher will generally have produced a preliminary plan or “design” of the future book, which serves as a guide for authors and illustrators, and can be used to draw up an initial quotation.

Producing Texts and Illustrations

Authors and illustrators now enter the scene: the authors write their texts and devise exercises on the basis of findings identified during the conceptual phase; their work is subjected to various internal controls within the publishing house and sometimes to spot checks in one or more schools. The illustrators produce the graphics in line with the instructions they receive from the publisher and the authors. In general a final quotation can be drawn up at this stage.

Preparations for Printing

All the elements to be printed must be prepared: the manuscript has to be typeset, i.e. composed into pages suitable for printing; illustrations must be prepared in a photoengraving workshop. Composition and photoengraving work is done on films for offset printing.

The text and illustrations are then arranged on each page: the design drawn up during the conceptual phase is finalised and a model or “layout” produced, which is used as a sort of template for the future textbook.

Following the instructions given in the layout, the films produced for the text and illustrations are arranged for every page, and the pages are “mounted”, i.e. all the pages that are to be printed at the same time are stuck onto a transparent background.

This montage produces the forme which can then be used to print the book.

Printing and Finishing

The textbook is now ready to be printed. Large-format sheets are placed in the printing press. Several pages of the future textbook will be printed at once, as they have been mounted.

The sheets must then be put into the final form, which involves five steps: firstly they are folded in line with the number of pages printed per sheet and the type of folding planned, then they are put together to form the inside of the book; the book is then stitched, stapled or stuck together. All that then remains is to add the cover and trim the three open sides to give a neat finish - a new textbook is born.

Storage and Marketing

The textbook is stored at a distribution centre. A promotion campaign is run to present it to those responsible for purchasing textbooks, primarily school teachers and head teachers. A distribution network then ensures that the textbook can be supplied to book shops or directly to the schools.

Follow-Up

In the field, the publishing house monitors the performance of “its” book, with a

view to possible reprints

The use of the textbook is more or less strictly monitored; the publisher thus gathers data which would be important for any reprints.

If you do not yet have much experience in this field, this initial description of the production process has probably confused you a little. You probably did not realise that so much went into producing a textbook.

The technical terms, specially those from the world of printing, are bound to be new to you, and you will have no clear idea about what certain operations really involve. But we have refrained from going into detail about the individual technical operations, and we have not even mentioned every essential step in the production of a textbook.

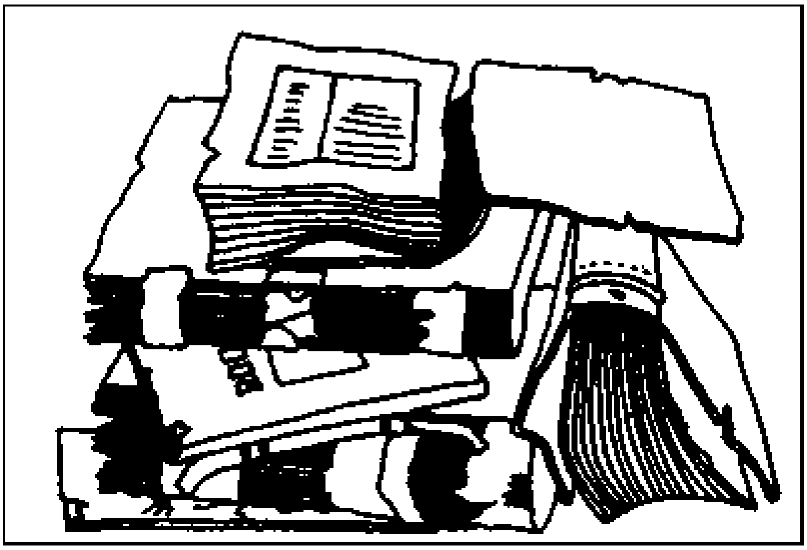

1. Preliminary Research: The most common reasons for publishers to produce new textbooks are that the old ones are tattered and worn, have become unusable or have become obsolete as a result of major changes in the official curricula.

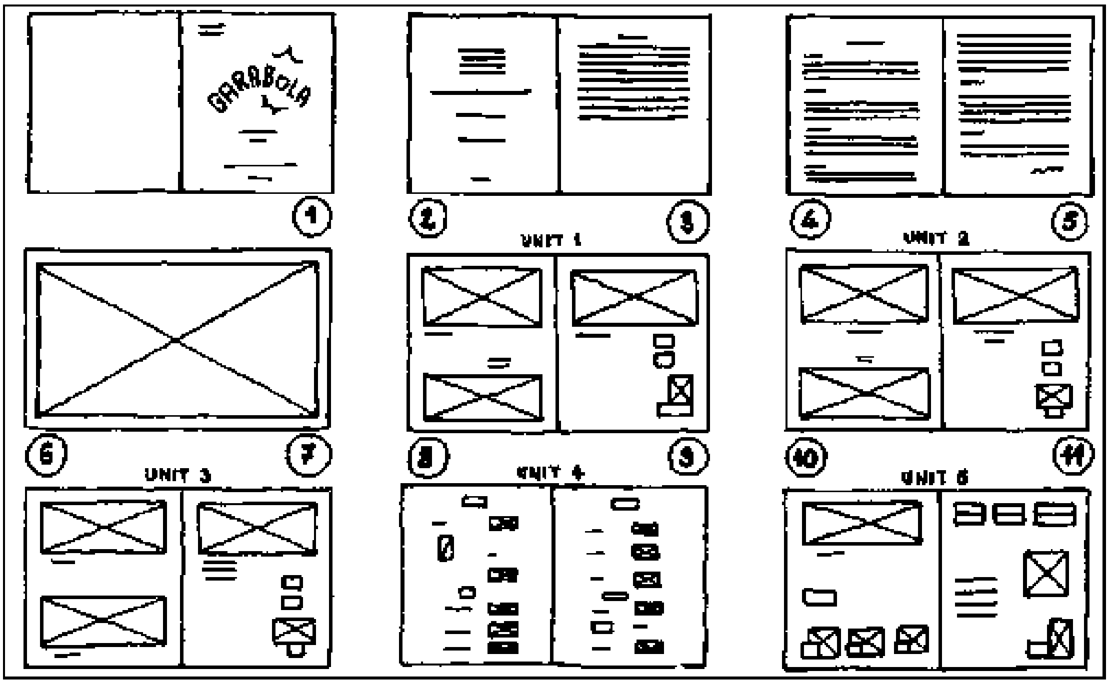

2. The Concept: Once the contents and the form of the textbook have been defined a design

can be drawn up. Thereafter the approximate visual arrangement of the texts and illustrations can be undertaken, double page by double page; this draft is known as the layout plan. The illustration below shows the first few pages of Garabola at this stage.

There are three reasons for this: firstly, if you are interested in discovering more about certain production techniques you will have no difficulty in satisfying your curiosity; at the end of each chapter we list a number of publications which deal with these points and illustrate them well; secondly, you should focus your attention primarily on those parts of the process which directly concern you as authors - the analysis of the subject matter, for instance - rather than getting bogged down with technical details; finally this brief presentation will be taken up again and dealt with in more detail in chronological order in later chapters, which will give you additional information and broaden the scope of this first brief introduction.

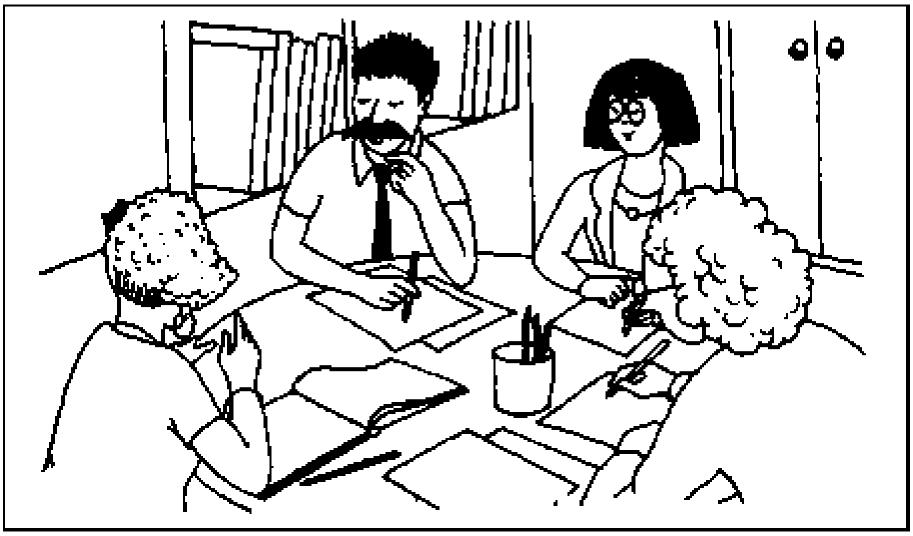

3. Producing Texts and Illustrations: The authors devise texts and exercises, while the illustrators produce the graphics, both working on the basis of the layout plan.

What should be grasped at this stage is the principal stages that make up the publishing chain on one hand, and the basic principles of certain tasks involved in producing a textbook on the other. To allow you to better assimilate this information, we have summarised the essential points, and illustrated some of them.

As authors you should become familiar with the various links in the publishing chain

4. Preparations for Printing: You should be able to distinguish the various phases of work.

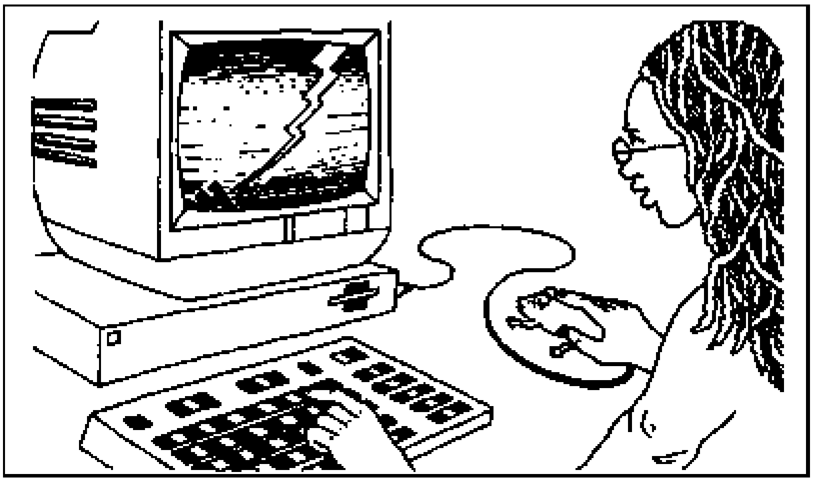

• The texts and exercises are typeset using a computer, the characters in the resultant copy are the correct shape and size.

• The layout artist then makes a precise dummy make-up on paper, arranging texts and illustrations.

These explanations and the illustrations above will have helped you to familiarise yourself with the various steps that make up the chain, as practised by large publishing houses.

Given the fact that it is imperative for you to start to memorise the sequence of work involved, we will, however, come back to the production phases for a textbook one more time, summarising the main phases within the publishing chain and the results of each phase. Before you proceed to the next section, we would thus recommend that you look at Table 1.

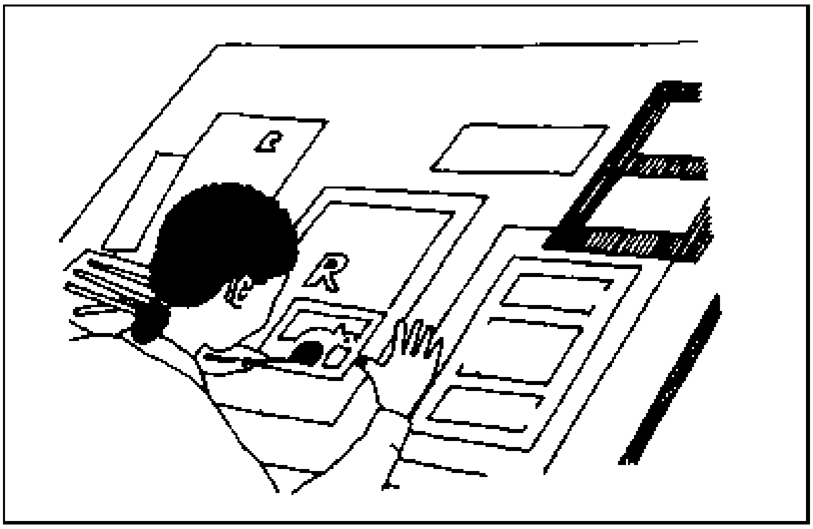

• On the basis of this, the films made for the texts and illustrations for each page are mounted.

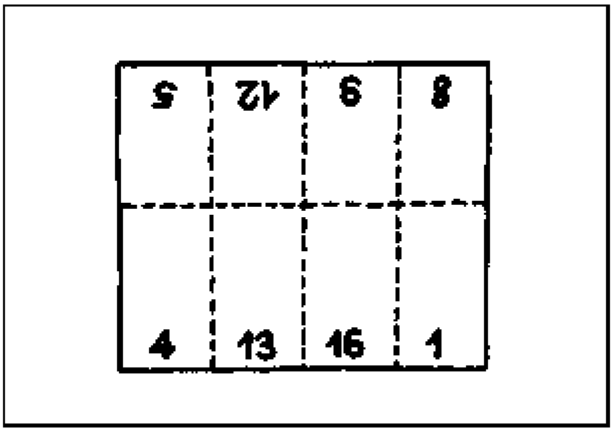

• Finally, the imposition is checked to ensure that the pages are arranged so that they will read consecutively when the printed sheet is folded. If eight pages are to be printed together, for instance, the layout would be as shown below.

Production Cycle in Developing Countries

After this introduction to the steps involved in the commercial production of textbooks, let us now turn our attention to the procedure that should be adopted in developing countries.

5. Printing and Finishing Once again you must distinguish between various phases.

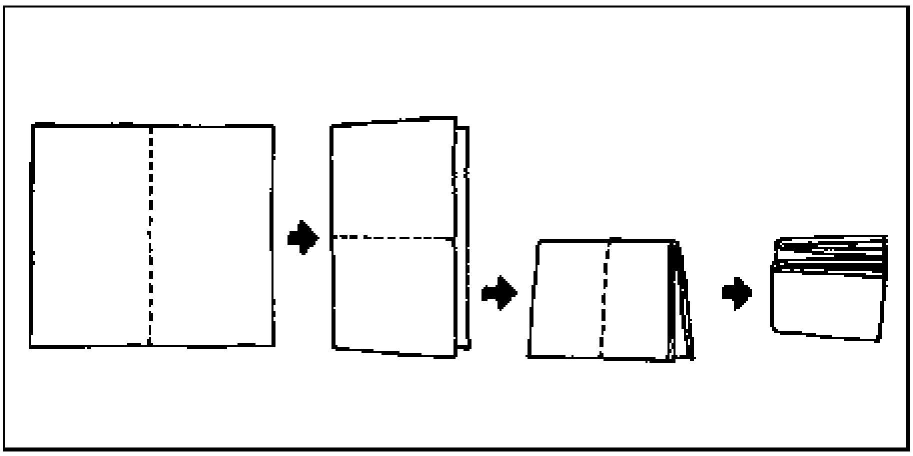

• Firstly the new textbook is printed on large sheets of paper which are folded several times to make what we call “signatures”, so that the pages are in the correct order.

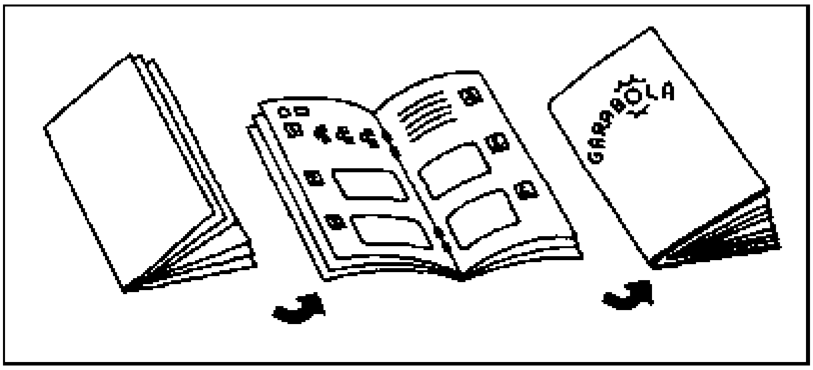

• Then the book is finished: the signatures are put together to form the inside of the book; they are sewn, stuck or stapled together, and finally the cover is added.

At first glance, the publishing chain is similar, since in both cases the preliminary research always precedes the concept, after which comes the writing, illustrating and production of the textbook. But, while industrialised countries have a long history of textbook production, as well as the resources to guarantee the quality of their work, the situation is very different in developing countries, where often even the most essential data is unavailable, as are expertise and resources. It is not unusual for there to be no official figures for the school-age population or the teacher to pupil ratio, and frequently it is not known what timetable the schools follow. This is why the production of high-quality textbooks, already an extremely complicated undertaking in industrialised countries, is all the more complex in developing countries.

1. Main Stages in the Publishing Chain and Results	
Stages	**Results**
1. Preliminary analysis	Market study
2. The concept	
Pedagogical considerations	Plan and organisation of contents
Physical considerations	Definition of format, number of pages, dummy
Graphic considerations	Decision on type of illustration and printing, layout
Financial considerations	Provisional quotation
3. Producing texts and illustrations	
Texts	Manuscript
Illustrations	Graphics dossier (photos, drawings)
4. Preparations for printing	
Typesetting the text	Galley proofs
Processing illustrations	Films
Paging on paper	Imposition scheme
Make-up and imposition	Film
Report	Blueprint
5. Printing and Finishing	
Printing	Printed sheets
Folding	Printed signatures
Assembly	Inside of book (unbound)
Binding	Inside of book (bound)
Attaching the cover	Book with irregular edges
Trimming	Finished product

We will look again at the steps in the publishing chain we identified above, and see where the procedure adopted in developing countries differs from the above scheme. Let us also point out that we will not go into the process of translating or adapting textbooks, however justified this may be under certain circumstances. What we describe here is how to produce an original textbook, what to do when one cannot adapt or translate existing books[1].

The publishing chain cannot be merely mechanically transferred to developing countries

The first unique feature of textbook production in developing countries: the feasibility study must look not only at the demand for textbooks, but also at the conditions under which they can be written and illustrated, manufactured and distributed

Preparations for an Education Project

Study of demand, available resources and conditions under which the books can be produced (1 year).

In industrialised countries, it is enough to identify a demand for a textbook, since the production and distribution techniques and facilities already exist. In developing countries on the other hand the production of a textbook depends on education policy, textbook policy, financial considerations, technical considerations such as the supply of paper and printing capacity, human resources, distribution and storage capacities, etc.[2] To ignore any one of these considerations may sometimes suffice to jeopardise the entire textbook project.

A period of several years may elapse before the textbook project can be launched, for, even with the support of an international or bilateral organisation, projects of this nature generally involve recruiting staff, finding premises and procuring the necessary materials.

Preliminary Research

Analysis of the context within which the textbook is to be used (6 months-1 year).

Let us once again compare the situation in industrialised and developing countries. In the former case the publisher is already fairly familiar with the target group, since he usually specialises in one subject and one specific level. In developing countries, however, the publisher often knows little about the target group, and the reference material available tends to be fairly unreliable and inadequate. It is thus crucial to conduct field studies to collect detailed data on teaching and learning conditions.

The second unique feature: preliminary research must look at teaching and learning conditions

Pilot Textbook

Devising, writing, illustrating, paging, printing and finishing the textbook (1 year).

The description and sequence of the tasks that make up this phase of the production work do not differ significantly from those undertaken in industrialised countries, even if textbook projects often lack the resources that a commercial publisher would have.

The result, however, is different in that it cannot be considered a final product. It can only be a pilot textbook.

Testing and Evaluation

Distribution of the textbook to selected schools and presentation to teachers at these schools, testing and evaluation (1 year).

In industrialised countries, given the degree of uniformity that exists from one school to another it is often enough to test one or two units of the new textbook at a few schools before moving on to produce a final version. In developing countries, given the lack of basic data, and given above all the great heterogeneity of teaching and learning conditions often found, the textbook must be tested in its entirety at a representative sample of schools for a minimum of one academic year before it is evaluated.

Producing a Revised Version

Revision of the pilot textbook, official check, printing the revised version (1-2 years).

The results of the evaluation phase allow us to revise the book before printing a large run. The length of this phase can vary; it depends first and foremost on the scope of changes felt to be necessary and the willingness of the authors to modify a product with which they still identify closely; it will also depend on the authority and provisions of the official body responsible for approving the final version, and on the various factors involved in printing a large run of textbooks (size of the run, terms of financing, country where the books are to be printed, etc.).

Nationwide Introduction

Devising and realising a distribution strategy for all schools concerned, in-service training and monitoring for teachers (2-4 years)

Let us once again compare the situation in industrialised countries with that in developing countries; in the former the new textbook is brought to the pupils without any major difficulty via book shops or schools, whereas in developing countries it is difficult to reach rural schools and rare to find an effective distribution network. Also, in industrialised countries teachers are in a position to use the new book without additional training, while in developing countries the new textbook must be systematically presented to ensure that it is put to the best possible use.

In developing countries the universal introduction phase thus demands skills, huge technical and financial resources and a great deal of time. However many schools must be served, and however many teachers must be trained, these two activities are always large-scale projects in their own right.

To sum up, then, the following tasks are needed in addition to the links of the commercial publishing chain to ensure that the textbooks produced in developing countries are suitably adapted to local needs:

- Preliminary feasibility study

- Field studies of the teaching and learning conditions

- Testing the new book at a representative sample of schools for a minimum of one academic year, and then evaluating the results

- Systematic revision of the pilot version of the textbook

- Development of a national distribution strategy

- Presentation of the new book to the teachers who will have to use it.

Textbook Projects

You will have realised by now that the systematic production of textbooks in developing countries would overtax any single department or unit. How, you may ask, can didactic material be devised and produced taking into account all the relevant aspects of the system? Who has the human, technical and financial resources to undertake a task of this scope?

Some developing countries can meet their textbook requirements using their own skills and funds - but these are the exceptions. More often projects, generally funded by international or bilateral technical or financial cooperation, are charged with the systematic production of textbooks.

We think that it is instructive for those of you who are still relative newcomers to the field of textbook production to realise that projects of this sort can generally manage to perform the work described above. By way of example we will describe below the main phases of production for the very first textbook devised, developed and produced within the scope of one such education project, the Tef'Boky Project[3].

2. A Textbook Emerges Step by Step
At the end of 1986 an education project, the Tef'Boky Project, was launched in Madagascar. It aimed to train a group of authors and to develop textbooks in the national language for primary school pupils. To pursue the two-fold goal of training and production, the group of authors responsible for the subjects Malagasy and mathematics produced the materials step-by-step in a way which may be considered fairly exemplary. This table shows the chronology of *Garabola,* the first reading and writing book to be produced in Malagasy.
1. Feasibility Study
In 1984 a study committee noted a general shortage of textbooks in Malagasy for primary school pupils. The committee recommended that authors be trained to fill this gap.
2. Preliminary Research
In 1986 the Tef'Boky Project was launched; in October, the authors responsible for Malagasy started work. They prepared and undertook preliminary research in the field, and at the end of 1987 presented the results in a document which served both as the principal frame of reference for the materials to be developed and as a report for the education authorities.
3. Producing a Version for Testing
In 1988 this working group devised and develop a set of learning materials for reading and writing Malagasy. 3,000 copies of *Garabola* were printed ready for the start of the academic year 1988-89.
4. Testing and Evaluation
The didactic material was tested for one academic year at forty schools and the level of attainment tested at the end of the year; the results were presented officially to the ministry.
5. Producing the Revised Version
In 1990, the material was revised on the basis of the results of the evaluation phase and was selected for nationwide use: thanks to a World Bank loan 450,000 copies of the new textbook and 17,000 copies of the teachers' guide were printed; slates introduced to replace exercise books were also financed.
6. Universal Introduction
The structure set up with the help of the World Bank[4] is currently in charge; it is responsible for working out the nationwide distribution plan. *Garabola* should be used throughout the country as from the academic year 1993-94. Some ten years have thus elapsed since the feasibility study.

Writing and Production

Test your book systematically and evaluate the results before printing a large run
Plan the entire series of textbooks from the outset

If you do not yet have experience in the field of textbook production, you may think that, once the appropriate funds have been approved, the revised version of a textbook can be rapidly distributed to all schools in a country. Nothing could be further from the truth, however. If you look carefully at Table 2, you will see that no less than three years elapsed before the textbook was finally distributed (in 1993), although the finished version was completed and the funds available in 1990.

It is important to know that the authors can only influence the rate of progress on the work for which they are directly responsible. Where your textbook is to be printed in large numbers you have no control over the printing or the distribution; your “product” slips completely out of your hands and there will be delays and break-down which you will almost inevitably feel are out of all proportion given the long, complex development work, particularly if you attacked your part of the work with great gusto.

Table 3 gives you an idea of the imbalances that can occur between the development phase and the production phase. This table follows the progress of *Garabola,* indicating a few crucial times in the printing and distribution of the 450,000 books.

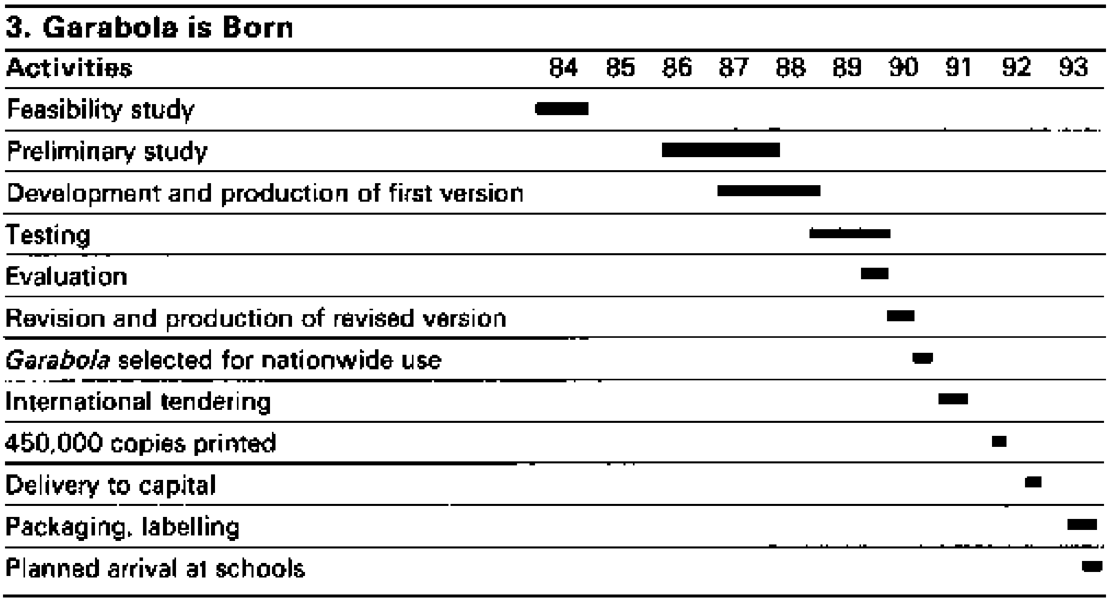

Textbook projects should always incorporate author training

Producing a Series of Textbooks

As you have just read, the process of providing a large number of systematically produced textbooks can be long and difficult, but it is possible with the requisite technical and financial back-up.

Nevertheless you will also have noted that, even given a favourable framework, i.e. once the technical and financial problems have been solved, the production of a first textbook takes years - no less than ten in fact[5]! How can we possibly produce two books then within a reasonable time-scale and without any drop in quality? And an entire series?

Throughout the industrialised world, the production of textbooks follows a rigid scheme, spanning several years; in developing countries no other procedure should ever be adopted. Yet the planning is always most difficult in this part of the world, where the publishing chain is longer and more complex. When we aim to produce a series, we must coordinate the activities needed for several different textbooks at once; to put it more clearly, while the first textbook is being tested and revised, plans must be made for the development of the second, such that the books in the series are printed without “losing” any academic years, and without missing the start of the academic year.

To illustrate this, Table 4 shows the actual time schedule used in the Tef'Boky Project to produce the pilot and revised versions of the first two reading and writing books produced in Malagasy, *Garabola* and *Tongavola*[6].

4. Time-Frame for Work on Garabola and Tongavola

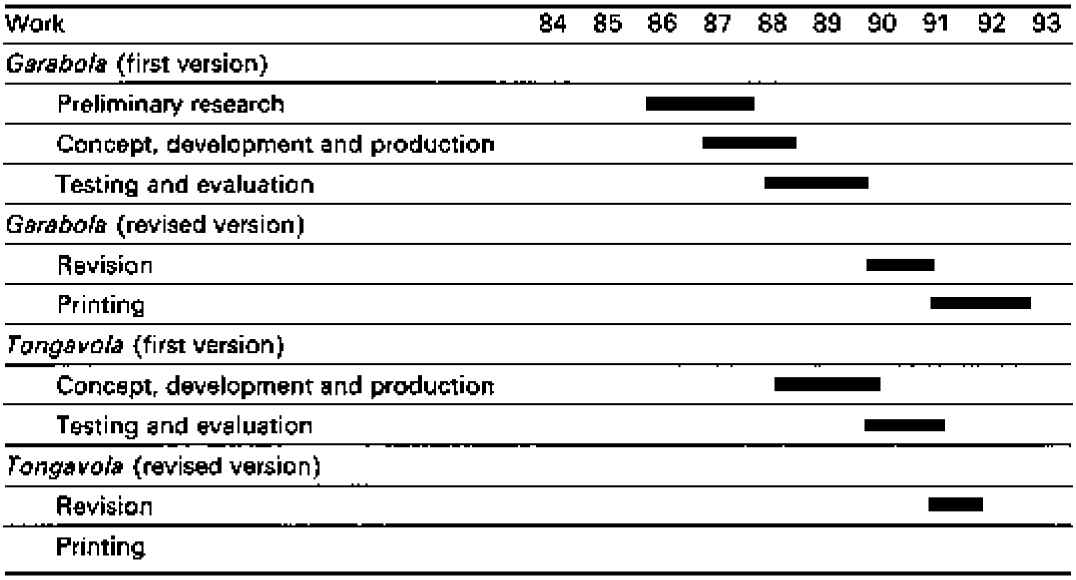

2. Those Responsible

The duties described and illustrated above should have given you a basic understanding of how textbooks are produced.

This information is undoubtedly of capital importance to you, but it is still far from being adequate to allow you to start work, far less to plan your work. Indeed until you are aware of the many actors involved in the chain and their respective tasks, you will find it difficult to define your own. You should also note in this context that it is just as important for a new author to acquire an understanding of the technical side of production as to analyse and fully understand the production system within which he finds himself.

Bearing this in mind, we now propose to look at the duties of the various units and entities which are involved in producing textbooks.

Once again, we will firstly turn our attention to the system generally adopted in industrialised countries, to allow us to better gauge the special features of those used in developing countries.

> **As authors you can only define your own task once you are familiar with those of all the other actors involved in the publishing chain**
>
> **In the commercial publishing chain we find three entities each with its own well-defined role**

Private Contractors in Industrialised Countries

In spite of certain differences it is true to say that there is only one real textbook production system in industrialised countries.

As a general rule, three entities are involved in the commercial publishing chain - the Ministry of Education[7], a publishing house and a printer, the latter two always being private enterprises. The duties of each of the three have been clearly established for some time.

Each of these three can, naturally, sub-contract certain operations to another enterprise. It is, for instance, common practice for ministries to contract a research institute to modify curricula or to evaluate didactic materials; the publishing house may contract educational consultants to define the contents of the new textbook; and finally the printer does not as a rule perform every stage of the production work himself, and may well farm out the stitching or binding work.

In Table 5 we have only indicated which of the three entities is responsible for each task, regardless of whether they perform the work themselves or delegate it.

You will see that "evaluation", so important in developing countries, is not even mentioned in the table. There are two main reasons for this.

- Firstly a rigorous external control is often conducted before a new textbook is granted the official authorisation, compulsory in some countries, where the publisher must have every book produced approved by the Ministry of Education. This procedure ensures that the products submitted by the publisher for approval are of a high quality.

- Secondly, where no official approval is required the publisher bases his decision on whether or not to order a reprint firstly on commercial considerations (sales figures), while head teachers, members of textbook examination committees and teachers play a not insignificant part in that they select the books, and thus help ensure certain quality.

5. Principal Duties of Those Responsible for the Textbook

Entity	Duty
Ministry	
	Defines national education policy
	Develops or adapts curricula
	Officially approves textbooks[8]
	Evaluates levels of attainment
Publishing House	
	Decides whether or not to publish a textbook
	Defines the pedagogical considerations
	Identifies the physical and graphical form of the book
	Has a quotation drawn up
	Selects and contracts authors
	Selects and contracts illustrators/photographers
	Supervises and controls editorial work
	Organises the reviewing of texts
	Supervises and controls illustration work
	Designs the layout
	Performs / checks the typesetting
	Ensures that galley proofs are proofread
	Performs / checks photoengraving work
	Defines provisional layout in more detail
	Prepares the dummy make-up
	Prepares the file to submit to the ministry for the imprimatur
	Decides how to print and finish the book
	Selects a printer
	Has a final quotation drawn up for printing and finishing
	Selects and orders the desired paper from the printer
	Submits the job to the printer for printing
	Checks mounting work and gives the printer the go-ahead
	Pays for printing and finishing
	Is in charge of marketing the finished product
	Prepares and ensures the monitoring of the book in the field
Printer	
	Draws up the quotation for printing and finishing work
	Mounts text and illustrations
	Prepares the type forme
	Procures paper and other inputs
	Prints, finishes and delivers the textbook to the publisher as instructed

In either case it is the private publishing house that is really in charge of the production of textbooks: as you will see from the Table 5, it decides whether or not to produce a book and has complete control over production, monitoring and management. It monitors the textbook right up to the reception it is given by pupils and observes the use of the book to make any preparations for reprinting as early as possible.

Production Systems in Developing Countries

In developing countries we find several production systems which differ to a greater or lesser degree from the model described above. The most commonly found types are described below.

National Commercial Production

This system has many similarities with that found in industrialised countries: the ministry stipulates the content matter and may define textbook requirements; then private publishers publish and market these. There is generally no preliminary testing, neither are the textbooks presented to teachers. Thus, as in industrialised countries, it is the market which decides when several different textbooks are available for the same target group.

This system can be found in varying degrees in countries which have managed to establish private publishing capacities, such as Kenya and Nigeria.

State-Run Production

The ministry is in sole charge of textbook production, defining the subject matter to be covered by the education system, identifying textbook requirements and meeting these requirements. Often the ministry entrusts the writing and publishing work to civil servants, while the production and distribution is delegated to parastatals.

In this system too, it is rare for the textbooks to be tested and systematically presented to teachers; they tend to be placed at the disposal of teachers or imposed from above. The textbooks produced in this way are generally cheap, but very often the quality is poor, especially in terms of the graphics (illustrations and layout).

This system has been used in Tanzania, Madagascar and other African states.

National and/or Foreign Commercial Production

The ministry turns to other countries to provide the textbooks it needs to attain pre-determined objectives. There are two possible scenarios: either the publishers contacted produce the textbooks with national support; the manuscript is often produced by a team of local civil servants while the layout, illustrations and printing are executed outside the country; or the publisher simply imports its own textbooks and markets these. These are almost always attractive books, but they are also expensive, and the contents, particularly the graphics, are not always very well adapted to the country in question.

The large English and French publishers can thus be found to a greater or lesser degree in many African countries.

Several systems may co-exist: we may find private national production of text-books in European languages alongside state production of national-language books, where the financial rewards are not attractive enough for private publishers.

Each of these systems has its own shortcomings, but some specialists recommend moving towards the first of these; they claim that competition must be honed and the private sector encouraged to take part in the textbook sector, wherever possible[9]. It is true that the production of textbooks demands creativity, profitability and functionality which a civil service can rarely provide, but at the same time commercially produced textbooks, whether they are produced in the country or abroad, primarily address the well-off urban classes, with purchasing power and easily accessible without a complicated distribution network; poor pupils who represent the majority of the target group, or those living in rural areas which may be very isolated, are thus *de facto* discounted.

Let us for the moment just note that although authors naturally cannot modify the system within which they operate, it is imperative for them to understand the features of that system. This will allow them to understand the respective tasks of the entities involved in textbook production, and thus to define their own role.

3. Publishing Specialists

Let us sum up what we have learned so far: we have analysed the technical steps involved in producing textbooks and the various production systems currently in use. Nevertheless, before they can identify their own role, authors must be familiar with the actors involved in the publishing chain. They must know who is responsible and who performs which work, who plans, directs and controls each stage and who performs the hands-on work.

So, let us then look at the role of publishing specialists, again making a distinction between common practice in large commercial publishing houses and in developing countries.

> **A very few developing countries use the private sector to meet their national needs. Most of them rely on state or parastatal structures, or call on foreign assistance**
>
> **The quality of textbooks in industrialised countries is first and foremost a reflection of the way publishing houses are organised**

Organisation of a Commercial Publishing House

As you have seen it is the publisher who directs the writing and production of textbooks in industrialised countries. To meet his many-fold responsibilities, he needs managers who are responsible for various aspects of the process and technicians to perform the work required. Let us look in more detail at these two groups and their respective duties.

Managers

The publisher firstly surrounds himself with a team of managers, the main duties of whom are listed in Table 6.

6. Main Duties of Managers within a Publishing House	
Manager	**Duties**
Publishing Manager	
	Identifies textbook production project
	Defines contents and how they are to be arranged
	Selects authors and contracts them
	Supervises and reviews authors' contributions
	Analyses the way the book is used in schools
Art Director	
	Decides on the graphics for the textbook
	Selects illustrators and photographers
	Supervises and reviews the illustrators' and photographers' contributions
	Designs and manages the layout
	Selects typographic characteristics
Production Manager	
	Defines physical features of the textbook
	Estimates the production costs
	Plans and monitors production
	Obtains quotations from production companies
	Monitors typesetting and photoengraving work
	Monitors printing and finishing work
Commercial Manager	
	Performs market analysis
	Calculates approximate price of finished book
	Runs promotion campaigns
	Organises storage, distribution, marketing

Book Technicians

When a publisher first decides to publish a book it is not only these four people who swing into action; to perform the necessary work, they mobilise a veritable army of specialists, both within and outside the publishing house.

One does not always find the same technicians in every publishing house of course, but in general it is fair to say that the four managers whose tasks we have just described delegate some of their work to specialists; the form this collaboration takes is illustrated in Table 7.

7. Main Duties of Technicians within a Publishing House	
Technicians	**Duties**
Working with the Publishing Manager	
Educational consultants	Help specify pedagogical features of textbook
Authors	Write and take stock of manuscript; run preliminary tests; read proofs
Proof readers	Correct manuscript; read proofs
Publisher's secretary	Prepares manuscript
Working with the Art Director	
Authors	Help with the graphic concept
Illustrators / photographers	Help design graphics, produce illustrations and check the quality of photoengraving
Documentation expert	Researches the necessary illustrated documents
Layout artist	Visualises the design, finalises layout; produces make-up
Graphic artist	Decides on typographic characteristics of text
Working with the Production Manager	
Publisher's secretary	Prepares elements to be printed, texts and illustrations
	Monitors ongoing activities (quotations, planning, contacts with type-setter, photoengraver and printer)
Working with the Commercial Manager	
Promotion Manager	Designs and realises the promotion and marketing campaign for the textbook
Sales Manager	Ensures that the textbook is available to readers
Distribution Manager	Ships textbooks to points of sale

Publishing Specialists in Developing Countries

Let us now look at the situation in developing countries. The first difference is in the number of actors involved; generally textbook production teams are very much smaller in developing countries. Yet, if we leave aside the few countries with well developed private-sector publishing capacities, the main difference between the two systems is the absence of the publisher or the failure to appreciate the importance of his role, and the inevitable redistribution of the duties that would otherwise be assumed by the publisher among the other actors involved, in particular the authors and the printer: the former often do a great deal more than devising the concept and writing textbooks and the latter, whose role should be limited to the actual printing, is frequently forced to take on some of the publisher's duties too.

In some countries, it is fair to say that there is no national publishing capacity, in either the state or the private sector. In others private publishers address only that part of the population that constitutes a potentially interesting market, even if this is a tiny minority of the population: this was true in Peru, for instance, where, at the start of the 1980s private publishing houses were geared only to Spanish-language publications, and were not interested in local languages. In still other countries the role of the publisher is not understood or is not known: often the ministry is not properly informed about the role of the publisher, while authors do not readily accept him, seeing him as one more irritating control between them and the printer, which only swings into action once the manuscript is finished.

The lack of understanding of the publishing chain, the wariness of the authors vis à vis the publishing unit, the lack of technical know-how of insufficiently trained publishing managers and the difficulties of coordinating the work of different departments can thus lead to an astonishing redistribution of responsibility: as we will see, the authors, and even the printer frequently see themselves forced to take on responsibility for considerably more than their traditional tasks.

Redefining the Traditional Role of Publishing Specialists

In those countries where textbook production is in the hands of a public-sector publishing house or a publishing unit within the Ministry of Education, the roles and responsibilities of the various actors are not always clearly defined.

There are two common scenarios. In the first case the officials, often with no well-founded publishing skills, approach the printer directly with only a manuscript, i.e. a text rather than an imposition scheme including the final layout and illustrations - and expect him not only to print the textbook, but also to take on responsibility for publishing, or to contract this work out. The traditional publishing chain is thus reversed, since the publisher, rather than supervising work from the start, is only consulted at the end, if at all.

In the second scenario the officials entrust the authors with the overall responsibility; without realising the enormity of their demands, they expect the authors to produce a product which can be handed to the printer, and printed immediately. The authors have no choice but to assume some or all of the work of the publisher, without necessarily being up to the task.

To allow you to pinpoint the duties of the publisher, the author and the printer in industrialised countries and those characteristic of the production system within which you operate we have summed them up in visual form in Table 8. The illustration indicates how the traditional roles can be modified and the repercussions this has on the work of the various actors.

Rough Orientation of Textbook Projects

It is interesting to see how donors who have specialised in textbook production react to a situation of this sort, or to put it more succinctly, how they organise their large-scale textbook projects. Their current efforts seem to pursue two objectives on different time-scales.

8. Main Duties of Principal Actors in the Publishing Chain	
In industrialised countries textbook authors are at hands-on level. Their duties are limited and well defined; they have no contact with the printer.	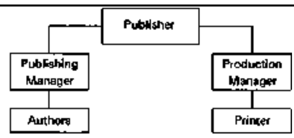
Where there is a publishing unit its duties are sometimes ill defined or little understood; in this set up the publisher, authors and printer may be in contact with one another without any clear definition of their respective duties.	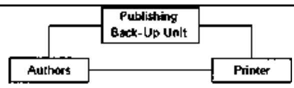
In some developing countries which have no publishing capacity, the authors must assume some publishing responsibility and as such have direct contact to the printer, with whom they share responsibility for publishing.	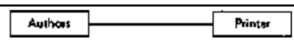

In developing countries the traditional roles of the publisher, the authors and the printer are re-allocated

It is just as urgent to set up a publishing unit as to train authors

Those who give precedence to a short-term strategy, aim firstly to respond to urgent needs, in some cases the total absence of textbooks in schools. To this end they focus first on the authors who they train in basic publishing techniques, wherever there is no publishing capacity in the country in question, to allow them to produce didactic materials against the odds. They generally manage, and the quality of the materials produced is acceptable, if not always excellent. We should, however, specify that when the projects come to an end, having trained authors and given the country the textbooks it needs, the authors cannot continue their work within a strong publishing structure and the know-how generally vanishes rapidly. When new textbooks are needed, generally about five years down the line, the whole process starts from scratch.

By contrast, those who accord priority to a medium- or long-term solution attempt to establish a sound publishing system, and there can be no doubt that this is what we ought to aim for; they focus on providing training for technicians and the various other book-related occupations, rather than on producing textbooks immediately. This formula too has its risks, of course, the two main ones being staff changes, with the result that individuals are given several years of training as technicians and then leave before they have ever worked productively, and the lack of competent authors on whom trained publishers can rely. In other words there is a risk of producing well trained publishers - who then have nothing to publish.

We would like to stress that, in view of the sheer scale of the demand for textbooks on the one hand, and the general lack of publishing skills on the other, these apparently divergent efforts should always be considered as complementary approaches, and pursued energetically without delay in many developing countries.

Responsibilities of Authors in Developing Countries

Your responsibilities as authors will depend on the production system within which you work

Some of you may think that the previous section is more relevant for decision-makers at national level and international donors than for authors, in view of the fact that it is difficult if not impossible for the latter to modify the textbook production system. But you will not be able to define your own duties until you have a firm grasp of the stages involved in producing a textbook - and this is the *sine qua non* for you to commence and indeed one day finish your work.

The tasks of textbook authors in developing countries are not always identical in every country. In some cases you will be working within a structure which allows you to concentrate on writing a manuscript on the basis of a pre-defined concept; in others you will have to perform certain publishing work in addition to this, perhaps even all the publishing work. In other words your tasks will always be defined in terms of the publishing support at hand: the less efficient the publishing unit, the more you will have to do, to the point that in some cases you could justifiably be termed “publisher-authors”[10].

Let us take stock at this point. Try to call to mind the various stages involved in the production of a textbook, and the entities and specialists needed to perform the relevant work. Then identify the support that you can expect in your work. In this way you can define what the officials implicitly expect of you most of the time, gauge the scope and complexity of the work, accept it and, in the ideal situation, optimise it.

Supervision and Training

But how, you will ask, can we as authors or future authors of textbooks measure up to responsibilities of this magnitude? How can we become the “publisher-authors” that the country needs, when we are at best “apprentice authors”? If, as is generally the case, you are former teachers, pedagogical advisers or even school inspectors you will only be able to meet your commitments if you have technical supervision, or if you have had pertinent training.

We feel that several years of on-the-job experience, plus technical supervision, perhaps in conjunction with internships together make for the best training.

This was, in any case, our experience during the first few years of the Tef'Boky Project. To mitigate the shortages of textbooks the authors in the project learned their craft on the job, producing textbooks with the assistance of specialists; they were then able to systematise their knowledge with the help of short training courses in Madagascar and overseas[11].

4. In Conclusion

Beyond the Textbook

Whatever the system within which they operate, i.e. whatever the tasks expected of them, groups of authors in developing countries always play a crucial part in ensuring a supply of high-quality textbooks, as we have seen in this chapter. But, however heavy this workload alone, their responsibility is rarely limited to producing textbooks; in fact it is generally the authors who must prepare the way so that their product is well received by teachers and parents.

Information and awareness measures must always be handled by a ministerial department specialised in this field, which will mean that it has the equipment it required. When the textbooks reflect curricular changes, for instance if a national language has replaced a European language as the language of instruction, these activities go well beyond the scope of a small group of authors who already have more work than they can handle. Nevertheless they are often left with the responsibility. The authors then find themselves faced with the choice of concentrating all their energy on writing and not preparing people for the launch of the new material, thus running the risk that the finished product will be rejected by insufficiently well informed users, or of adding one more string to their bow and running the risk of producing mediocre and superficial books[12].

Before you start work on the textbook we thus suggest that you analyse the school situation and gauge the textbook's chances of being accepted without further action; this will enable you to make provision, if necessary, for information and awareness measures, without which your heavy workload as authors may be pointless.

Make preparations for the launch of your textbook from the very start of the project

Notes

[1] See Seguin R. *L'élaboration des manuels scolaires,* p. 15-19. Paris: UNESCO, 1989 for information on the translation and adaptation of textbooks. It should be noted that textbooks for the primary level can rarely be translated, especially reading books in the national language; the rest of this guide should explain why.

[2] Cf. Read A. *A guide to textbook project design and preparation.* Washington D.C.: World Bank, 1986 for information on the preparation of textbook projects.

[3] “Tetik'asa famolavolana boky malagasy ho an'ny sekoly” (Tef'Boky) can be roughly translated as the “Malagasy Textbook Workshop”.

[4] The Unité d'Etude et de Recherche Pédagogique (UERP) (Pedagogical Research and Study Unit) within the Ministry of Education.

[5] “A minimum of six years is required to write a manuscript, print, publish and distribute the finished book, and it is reasonable to plan an overall period of some ten years, given the time required for preliminary studies, planning, recruitment and, in many cases, training”. In: Seguin R., op. cit. p. 6.

[6] The date of printing a large run of *Tongavola* is not indicated; it was delayed for several years again for reasons which are neither technical - the final version has been ready to print since 1991 - nor financial - the funds required have been pledged - in nature. This situation is unfortunately by no means exceptional. Even when technical and financial preconditions are met, there is no guarantee that the work will be published, far less than this will happen within the planned time-scale.

[7] We should specify that the Ministry of Education is not always responsible for the tasks described hereafter; in very decentralised systems, these may be delegated to a body at

regional level, or to research institutes. To simplify the issue though, we will not take these cases into account here.

[8] The situation varies from one country to another. In Germany, for instance, publishers complain that they have to submit their textbooks to the relevant ministry for approval at regular intervals, in some cases every two years (In: Institut für Bildungsmedien. *Die kleine Schulbuchschule.* Frankfurt am Main, 1989). In France on the other hand "there are no official textbooks any more than there are textbooks that are recommended or approved by the Ministry of Education" (A. Savary. In: Huot H. *Dans la jungle des manuels scolaires,* p. 145. Paris: Seuil, 1989).

[9] Buchan A. et al *Etudes sur le secteur du livre en Afrique,* op. cit. p. 13.

[10] As we noted at several points during the Tef'Boky Project this lack of transparency often worries authors, who find it difficult to pinpoint their own part within the system as a result of their poorly defined publishing responsibilities.

[11] A separate publication, scheduled to be printed in 1995, deals with the experience gained in the Tef'Boky Project regarding training authors in developing countries who are responsible for producing textbooks for the primary level.

[12] The Tef'Boky Project managed to undertake some information and awareness measures (producing posters, calendars, supplementary reading materials and even a film), but this increased the workload of the authors, although they were only indirectly involved, such that they were pushed to the absolute limit.

Recommended Reading

Textbook Production in Industrialised Countries

BERTHELOT, J. *Petit guide à l'usage des auteurs débutants et de quelques autres.* Paris: Hachette, 1991

BERTHELOT, J. *Edition et techniques éditoriales.* Paris: Hachette Supérieur, 1992

FINELSC, G. AND SASSIER, D. *Un livre, des hommes. De l'auteur au lecteur.* Paris: Nathan, 1988

GREENFELD, H. *Bücher wachsen nicht auf Bäumen.* Munich: Ellerman, 1979

GROUPE DE LA CITE INTERNATIONAL *Le livre. Sa conception, sa réalisation. Documentation.* Paris, undated

HUOT, H. *Dans la jungle des manuels scolaires.* Paris: Seuil, 1989

LAPOINTE, C. *Le livre du livre.* Paris: Gallimard, 1987

Textbook Production in Developing Countries

ALTBACH, P.G. et al *Textbooks in the Third World. Policy, content and context.* New York: Garland, 1988

BUCHAN, A., DENNING, C. AND READ, T. *Etudes sur le secteur du livre en Afrique.* Washington D.C.: World Bank, 1991

CHATRY-KOMAREK, M. *Libros de lectura para niños de lengua vernácula. A partir de una experiencia en el Altiplano peruano.* Eschborn: GTZ Schriftenreihe No. 193, 1987

FARRELL, J.P. AND HEYNEMAN, S.P. (Ed.) *Textbooks in the Developing World.* Washington D.C.: World Bank, 1989

GUDSCHINSKY, S. *Manual de alfabetización para pueblos prealfabetas.* Mexico: SEP/ Setentas, 1984

RICHAUDEAU, F. *Conception et production des manuels scolaires. Guide pratique.* Paris: UNESCO, 1979

SEGUIN, R. *L'élaboration des manuels scolaires. Guide méthodologique.* Paris: UNESCO, 1989

To Sum Up

In industrialised countries textbooks constitute an important market. Private-sector publishers write, produce and market them. The laws of the market force them to act professionally; the textbooks are produced by highly-qualified specialists who stick exactly to the various steps in the publishing chain. As a result the purchaser can choose any one of a number of textbooks which are comparable in terms of quality and price.

In developing countries, the demand for textbooks is enormous, but textbook publishers are rarely able to produce enough books of a suitable quality as rapidly as needed. The central problem appears to be that we have not yet managed to adapt the publishing chain, which has proved so valuable in industrialised countries, to an environment which either fails to appreciate the importance of this chain, or lacks the human, financial and technical resources to put it properly into practice.

This guide addresses novice authors, who have been instructed to produce textbooks that are adapted to the teaching and learning conditions in their own country, at relatively short notice. We aim to strengthen their skills as authors, by giving them a basic understanding of the publishing process. The first chapter introduced the steps involved in systematic textbook production, to allow them to identify, by contrast, the steps needed to produce textbooks that are specially tailored to the needs and resources of their own country. We then looked at the organisation of large publishing houses and the responsibility of the professionals involved in textbook production, to help them pinpoint their own place within the system, and thus allow them to develop and react accordingly.

We believe that this is vital prior knowledge for all teams expected to produce textbooks in developing countries, if they are to bring their work to a successful conclusion.

The Authors

Once the feasibility study has been performed, work can start on producing the textbook; the first stage involves examining the context within which the book is to be used.

This field work marks the start of the work which, in most instances, will fall to you. You thus enter the scene and can expect to be there for a long time before the curtain falls. Given the length and importance of the work awaiting you, we feel that it is crucial to look at how you can best prepare yourself intellectually and in terms of materials, before going on to describe this work.

Please note that we will not be describing in detail the infrastructure you will need to do your work properly. Some of you will find a four-wheel-drive vehicle vital to undertake your preliminary research work, and later for the testing and evaluation of your material; it will be important for all of you to have a room where you can meet and access to a computer.

But, while recognising the importance of this infrastructure, we will not dwell on it, partly because the working conditions vary enormously from one team to another and your scope to influence your own working conditions is limited, and partly because the infrastructure alone is never responsible for the quality or mediocrity of a textbook[1]. What is decisive is the profile of the authors and their working methods, two factors to which this short chapter is dedicated.

Another general information chapter with no immediate application, some of you will think, impatient to find the “recipes”. If this applies to you, try and force yourself to read this chapter nevertheless; as you will have realised after reading the first chapter, the responsibility that you will have to assume demands special preparations.

1. Profile

Whether they write for primary or secondary level, textbook authors are not given specialised training, but those writing for primary level appear to be the least well prepared: they often have only the skills they have acquired on the job, in front of a class[2].

Yet, as you will have realised after reading the first chapter, all authors have a great responsibility which ought to preclude any amateurism. Those whose duties go beyond writing and touch on publishing work in particular should never improvise. They must be professionals, well prepared for the unique nature of their work and fully aware of the skills and behaviour they will need to adopt if they are to perform their work satisfactorily.

Before looking at the preliminary research phase then, let us examine the profile of the textbook author, which will allow you to identify the skills and attitudes so essential in your situation.

Basic Know-How

The essential know-how for all textbook authors regardless of the level and the subject they write for, and the system within which they operate are as follows:

- Well-founded knowledge of their subject; this may be mathematics, science, linguistics or any other subject;

- Skills in adapting didactic material to suit the profile of future users;

- The ability to write texts addressing both children and adults on a pre-defined topic within the space allocated;

• The ability to devise good exercises; exercises where the subject matter corresponds to both the attainment targets and to the demands of the layout;

• A basic understanding of the publishing chain; in particular as regards the essentials and possibilities open to various agents involved in the course of textbook production.

Indispensable Attitudes and Behaviour

Where there are recognised publishing facilities the above know-how will generally suffice to ensure that a textbook is produced: it will allow authors to prepare a manuscript of good enough quality to be published by the relevant unit, then printed and finished.

For authors without the back-up of a good publishing team, on the other hand, this know-how alone may well not be enough to allow them to meet all their commitments; if they are to take on the numerous and complex duties they will then be expected to perform, they will also have to acquire certain attitudes and behaviour, the most important of which are described below.

Know-how and attitudes are more important for an author than a highly developed infrastructure

Step One - Learn to work in a group

Ability to Work in a Group

It has become indispensable for everybody to learn to work in a group, since the trend is for more and more books to be written by a team of authors rather than by an individual.

But when the publishing unit is weak, and the authors bear most of the responsibility for the textbook, genuine team work is vital given the sheer scope of the work to be performed - and it is not easy to organise: agreement on even hotly contested points must be hammered out by the team, among equals as it were, without having recourse to a higher-level arbiter in the person of the publisher.

If you find yourself in this situation, where the responsibility of the publishing unit is limited to word processing, you must learn to create an atmosphere of tolerance and openness which will allow all team members to optimise their inputs. To this end, you will have to learn to formulate criticism or at least reservations, to argue a point, to listen to observations of others and take them into account, and finally to identify fully with the common decision.

Otherwise your work runs the risk of being slowed down or even paralysed well before the book ever goes to press.

Multi-Sectoral Attitude

Decisions regarding didactic material always demand a cross-sectoral approach, whether they concern the publishing side or the domain of the authors.

If, for instance you wish to define the sort of materials needed to learn to write, you should look not only at the pedagogical and didactic factors (What is the best aid for learning to write? What is the best one for teaching writing? Exercise book or slate?), but also at the financial considerations (How much does an individual exercise book cost? And a slate? How many parents will be willing to pay this amount?), the logistics (Will it be possible to supply the schools with exercise books in time every year?), the working conditions (Are classrooms suitably furnished to allow pupils to write in exercise books? Would a slate which is rigid and can thus be used by pupils working without tables or desks, not be more practical?), the production considerations (Can slates be produced on the spot?), etc.

The less effective the publishing unit, the more you will have to take into account factors other than the purely pedagogical and didactic. If you were to refuse to look beyond the confines of your own subject-specific knowledge you would be failing in your duties, and you would run the risk of either paralysing production or producing didactic materials that are poorly adapted to the actual environment in which they are to be used.

You should thus be prepared to look beyond your subject and become familiar with new fields, to look at a subject from several different aspects and compare these before taking an appropriate decision. You do not have to learn everything and know everything, but you should be attentive and well informed enough to react in time, and you should know who to turn to when you need assistance.

Step Two - Look beyond the narrow confines of your subject and examine the environment within which the book is to be used

Openness to Innovation

The ability and willingness to innovate will be every bit as important for you as the skills laid out above.

If you intend to produce textbooks that are in line with the demands and the resources of the country you will often have to go your own way: you will not find many valuable discussion partners in large publishing houses which have different options and face their own problems; equally it will be difficult to find contacts in developing countries, where it is rare to find individuals who have sought out new paths and devised original solutions to specific problems. Indeed, authors of textbooks in developing countries tend to base their work more or less openly on foreign models[3].

You must thus be open to new ideas: you should devise specially tailored answers to specific problems rather than looking for tried and tested recipes. You will have to fight against preconceived ideas, make your own hypotheses, and verify, check and analyse these. In fact you will have to become a researcher more than anything else. Otherwise what you produce will not be adapted to the needs of your country; it will be but a pale copy of existing materials.

Be open to new ideas and look for appropriate solutions as a group

Accepting the Constraints

Finally, you will have to know how to accept major constraints and make the most of the leeway you have.

The single most important constraint will be the financial one; as textbook authors you must always distinguish between what is desirable and what is feasible for your country, and must decide on the didactic material without losing sight of the financial implications for those concerned.

If necessary, you must thus accept that your book be printed in two colours, or even in monochrome; or you must refuse to write a textbook if the country cannot finance it, concentrating instead on a teachers' guide, if this helps achieve pre-defined goals. There is no place in a group of authors in a developing country for anyone who refuses to accept constraints, or who imposes unreasonable financial burdens on others in the name of artistic freedom[4].

If we have dwelt on the attitudes and behaviour demanded of textbook authors in developing countries it is because the importance of these factors is almost always underestimated, not only by education authorities, but also by those concerned. It is felt that a good teacher will automatically be a good author, for instance, ignoring the fact that the skills demanded of a teacher are quite different to those demanded of a writer or a publisher. We are astonished when otherwise brilliant specialists produce mediocre textbooks, poorly adapted to the target group, and when authors prove unable to properly identify the root cause of this mediocrity, which would allow them to remedy it.

These considerations aim to help you gear your work from the very start to the production system within which you operate. Do not let them discourage you, use them, even if they only help you to analyse the tensions which will inevitably arise in your group, and to remedy these more easily.

2. Tools of the Trade

The skills and knowledge described above are not always in themselves enough to allow authors to perform their work satisfactorily.

They will rapidly realise that it is not easy to work in a group, and that it becomes more and more cumbersome to consult the accumulated mountain of notes, references, decisions, texts and exercises when they need to. Paper and pencils are not enough: they need a high-performance tool, which will allow them to optimise the inputs and participation of each team member and to manage the data properly; an instrument which both enhances group dynamics and boosts the quality of the group's work.

Having practised it ourselves for several years, we recommend that you get used to a system of visualising your contributions. This is a working method which is inexpensive and easy to understand - if not always to use in practice. In our experience, displaying your work visually from the research phase to the preparation of the printer's copy is a much better guarantee of quality than any super de luxe electronic equipment.

Here are the tools you will need and the various steps involved in the procedure explained in a few words and several illustrations.

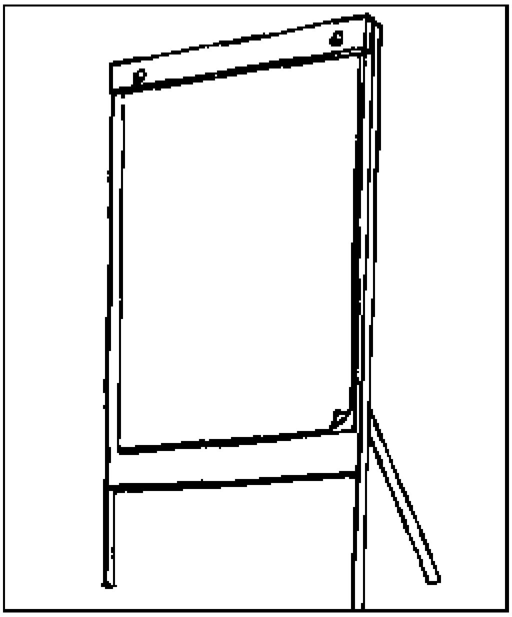

1. Preparing your tools: You should obtain a pin board made of porous material if possible, as well as several boxes of round-headed pins, a large number of cardboard strips or packing paper, the size of which will depend on the type of contributions. You will also need some marker pens and biros.

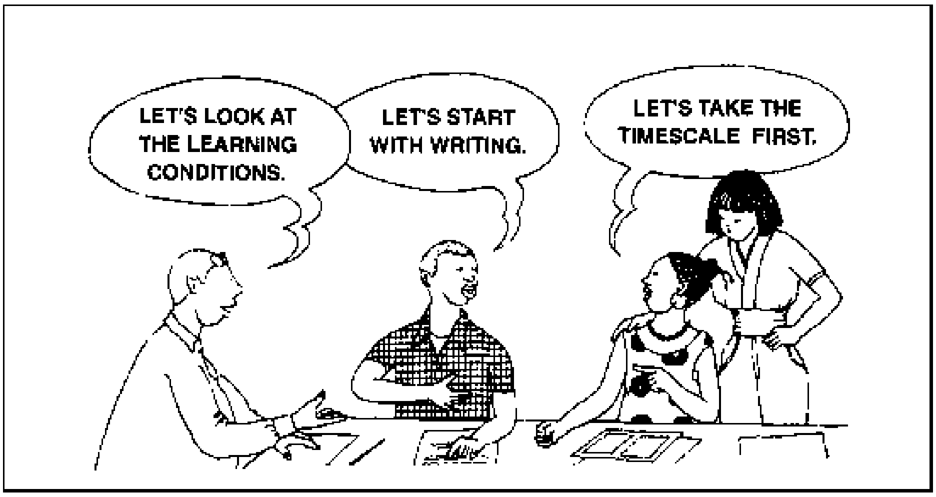

2. Identifying the topic: The topic you wish to work on should be defined verbally by the complete group. This way you avoid having to explain to those who have just arrived what has been decided on.

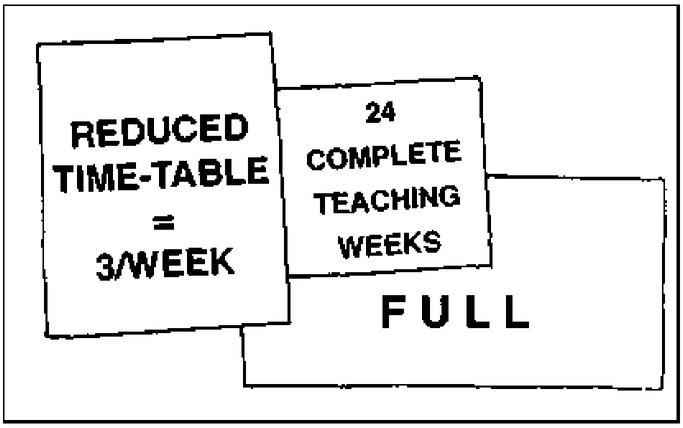

3. Initial brainstorming: Now you can start the written work. Allow about ten minutes for each participant to write cards without attempting to structure his or her contributions: contributions should be printed legibly, taking one card per idea and expressing it in a telegram style using no more than a dozen words.

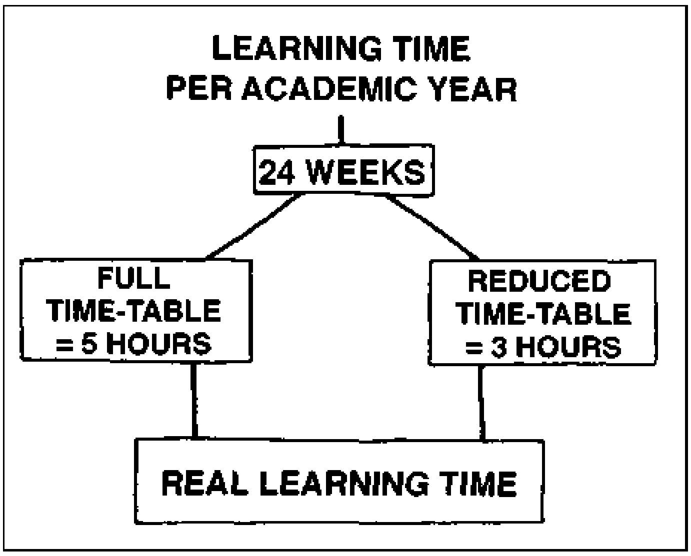

4. Pinning up provisional contributions: One participant gathers up all the cards one by one

and reads them aloud. He pins them on the pinboard, arranging them in a provisional order. He does not comment on them at this stage, to allow all participants to re-read the cards for themselves. The cards are then taken one by one, corrected, and arranged definitively.

3. In Conclusion

Notes

[1] To convince yourself of the relative importance of the infrastructure for your work, look at books produced some thirty years ago; the quality of some is quite remarkable, and they were produced without much in the way of mechanical aids, and certainly without computers.

What authors at that time managed to do with paper, pencils, scissors, a ruler and some glue, you can manage today. Do not let yourself be discouraged by a lack of materials or tools. They are important, but not essential.

[2] This does not only apply to authors in developing countries, but also to some in industrialised countries; H. Huot notes that in France, the textbooks for lower secondary schools and primary schools, “are written by authors, most of whom have no specific qualifications in the subject for which they claim to speak, who are often not even aware of the most accessible specialised works, and who are incapable of gauging the risk or possible consequences of certain presentations or explanations.” In: *Dans la jungle des manuels scolaires,* op cit. p. 60-61.

[3] Cf. Le Thank Khoi: L'enseignement en Afrique et le modèle européen. In: Coquery-Vildrovitch C. and Forest A. (Ed). *Décolonisation et nouvelle dépendance.* Lille: Presses Universitaires de Lille.

[4] The vanity and desire of some authors to produce a splendid-looking book explain some wrong decisions, such as opting for extremely expensive 4-colour printing where there is no real reason for this, or the production of a pupils' book which is sometimes thought to offer greater prestige than a teachers' guide, although the latter would have served the pedagogical purpose and would have been considerably less expensive to produce.

Although these mistakes, which are easy to understand, are not fatal in a rich country, which can afford certain luxuries, they are dangerous in poorer countries, which cannot afford to make a mistake in this field, so every effort must be made to avoid them.

Recommended Reading

BERGER, G. AND BRUNSWIC, E. *L'éducateur et l'approche systèmique.* Paris: UNESCO, 1984

CROZIER, M. AND FRIEDBERG, E. *L'acteur et le système.* Paris: Seuil, 1977

FERRY, G. *La pratique du travail en groupe.* Paris: Bordas, 1985

ZALTMAN, G., DUNCAN, R. AND HOLBEK, J. *Innovations and organizations.* New York: Wiley, 1973

To Sum Up

In industrialised countries the responsibilities of textbook authors are well-defined and relatively limited; in developing countries, they tend to be greater, even if they are not always well defined.

This is why authors in developing countries must prepare themselves particularly well for the work ahead.

Firstly it is, of course, vital for them to have certain basic know-how: there can be no question of planning to produce learning materials for mathematics, for instance, if the group cannot count on the support of a specialist in this subject.

Authors will also need certain attitudes, the most important being the ability to work in a group, a cross-sectoral attitude, an openness to new ideas and the ability to work within the given constraints. These are the attitudes which will enable authors to design, write and produce high-quality textbooks, that are genuinely adapted to the needs and resources of the country in question. They are all important, but we would like to stress the need for every textbook author in developing countries to be open to new ideas. In these countries a good textbook author cannot avoid being a researcher, looking for original answers to unique problems, where there are no cut and dried solutions.

Certain tools can be a great help to ensure the systematic development of textbooks; the methodical visual display of team members' contributions and of the main decisions made at the end of each session improves group dynamics and enhances the quality of the team's work.

Preliminary Research

Your first task if you have just been made responsible for producing textbooks is to conduct preliminary research. You will not be able to throw yourself into the conceptual phase without first identifying the actual needs and possibilities of the future users.

Preliminary research work must always be rigorous and meticulous, for the results will be of capital importance for the textbook in the making. If we compare our textbook to a building, the first phase is equivalent to the foundations; the data that you collect not only on the process of teaching and learning at classroom level and on the relevant subject matter, but also on the school environment as a whole ought to give you a solid base on which to build your book. The research work will almost invariably be complex and wide-ranging, and will generally require at least one year. It is thus quite impossible to describe this work exhaustively here; we will give you only a few pointers which you can adapt to your own situation.

To avoid discouraging you in any way, we would like to point out from the outset that the research work described here is only possible with special technical and financial inputs: you should analyse the recommendations, use them as best you can, and continue to push forward, even if you are forced to admit that it is impossible to apply the model in the form presented here. You should also note that this work is only essential for the first book in a series: the data thus gathered are generally sufficient to allow you to produce the following books, verifying only individual points on the ground.

First task of the author - Analyse teaching and learning conditions

Get to know everybody involved in the textbook to ensure that the finished product will be appropriate

1. The Need for Research

Is it really essential to undertake preliminary research, some of you will ask. Does it have to be so complex and so wide-ranging in view of the urgent need for new textbooks?

Before you can conduct optimum research work, you must first be convinced that it is absolutely vital. You must understand that the textbook is part of a complex environment, that it affects groups which must be examined if the finished textbook is to be in line with their needs and possibilities.

To convince yourself of the need for preliminary research look firstly at the list of those involved in the main stages of the publishing chain in a state production system, for instance.

9. The textbook and its environment	
Stages	**Main individuals/groups involved**
Decision to produce textbook	
	Education authorities
	Curriculum unit
	Publishing unit
Writing and illustrating	
	Authors
	Illustrators
	Publishing unit
Production	
	Printer

Distribution	
	Distribution unit
Modalities of textbook utilisation	
	Parents
	Education authorities
Presentation to users	
	Training unit
	Authors
Utilisation of finished textbook	
	Teachers
	Pupils
	Inspectors and educational advisers

Field research work demands human resources, time and technical and financial inputs

2. General Overview

Highly developed planning and organisation are needed to gather data on the school environment. For a period of several months you will have to manage relatively extensive human, technical and financial resources.

Given the complexity and scope of this work, we will start with a general overview, which will enable you to evaluate the extent and nature of the research work and the ways and means of conducting it. This will give you a frame of reference to allow you to put the more detailed explanations which follow within the overall context.

To this end, we will summarise the approach taken in the Tef'Boky Project, the main phases of work and the duration of each phase. These are listed in Table 10.

10. Field Study in Madagascar
In November 1986 the German-Malagasy Tef'Boky Project started the work that was to allow it to produce appropriate didactic material for reading and writing in Malagasy. Given the dearth of information available on primary schools in Madagascar and the lack of any evaluation of the few existing textbooks in Malagasy that did previously exist, the project saw itself forced to prepare a field study, select a representative area in order to analyse conditions in the country's schools, develop the materials on this basis, and be able to test it at these schools at a later date. Here is a brief summary of the work involved and an outline of how it was performed.
Listing factors to be examined (2 months)
The newly formed working group had to learn how to work as a group, become familiar with an alien form of visualisation and tackle a relatively new field of research all at once.
By way of introduction, the apprentice authors identified the factors and criteria they felt were important to determine the quality of a textbook in general; this was a sort of introduction to the field of textbook production.
Then they listed the factors that it was imperative to analyse in the Malagasy context to ensure that the new materials were in line with the needs and possibilities of the future users.
Devising research instruments (2 months)
Among the factors to be analysed the team checked information already available and planned the analysis thereof.
The team then devised and developed research instruments for missing data which would have to be gathered in the field, primarily in rural schools and villages: these mostly took the form of questionnaires and interview guides for adults (animateurs, teachers and parents), tests and guidelines for recording pupils' responses.
These instruments were pre-tested at several schools in a peri-urban zone before being used in the field.

Identifying a test zone (1 month)	
	Based on a number of criteria, the apprentice authors selected a representative sample of schools which fairly reflected teaching and learning conditions in the country.
	The sample involved 40 schools in one educational district. Preliminary research for the textbooks to be produced was conducted at these schools and the pilot version of the books was later tested and evaluated there.
Gathering data (2 months)	
	The entire team of apprentice authors and the three animateurs working in the test zone helped gather data in schools and villages. After one week of familiarising themselves with the research instruments, each member of the team was able to work independently examining one school per week.
Processing and interpreting data (4 months)	
	The data thus collected was processed, systematised and interpreted; the authors performed some of this work and delegated the rest to students and teachers (transcription of all recordings, counting the graphemes in the language, identifying words most frequently used by children, etc.).
Publishing data (3 months)	
	The authors prepared a fairly complete preliminary working paper to allow them to proceed with the conceptual phase without further delay.
	Parallel to the conceptual work, a final document was drawn up and submitted to the education authorities for their information.

3. Taking Stock

Having looked at this overview of what preliminary research can, and often does, entail within the scope of textbook production projects, let us return to the beginning. The first step must be to identify the factors that must be examined, evaluated or quantified before you can devise a systematic concept for new didactic materials.

It is important that you adopt a methodical approach, to guarantee that the information you compile is as complete as possible. There are two reasons for this: firstly, this is the best way to ensure that you do not have to come back to this phase later, interrupting the conceptual phase which is long and complex enough without these irritations, and secondly any omissions and oversights you make at this stage may spawn serious errors in the concept, development and production of the textbook.

The factors to be analysed will not, logically, be the same in every case. To avoid major omissions, we suggest a two-stage approach. Firstly, identify the factors which are always important, i.e. factors related to the teaching and learning conditions. Secondly look at the supplementary factors, which are pertinent for the case in hand.

Conditions in the Schools

Start by identifying the factors to be analysed

Whatever the class and the subject for which the textbook is intended, the authors must examine in detail the conditions under which the teaching and learning process takes place.

This analysis must go beyond the narrow confines of the school itself, and look at the educational environment as a whole. We would recommend that you first collect data on the political and educational framework in the country, before looking at the way education is organised, i.e. the day-to-day life of teachers and pupils. Finally you should round off this information by analysing the various target groups affected by the new materials, which will include not only the educational authorities, (primarily inspectors and educational advisers) but also the teachers, pupils and parents.

Having seen ourselves how one automatically tends to devise voluminous instruments that are not sufficiently well-targeted, we recommend that you systematically eliminate all factors that are not relevant for the material to be produced.

Table 11 shows the factors that should generally be examined before designing didactic material for primary level. To allow you to gauge the importance of these factors we have outlined the main reasons for including them in the analysis, and the repercussions they are likely to have on the new material.

11. Main factors to analyse regarding conditions in schools	
Field Factor	**Relevance for new materials**
Political and educational framework	
Educational legislation	General direction, e.g. language of instruction
Curriculum[1]	Learning targets
Official guidelines	Officially recommended learning methods
Organisational set-up of ministry	Chances of having innovative material approved
How education is organised	
Length of academic year	Volume of subject matter that can be covered
Length of school week	Ditto
Physical framework	
Storage space, furnishings	Quantity and type of materials available
Lighting	Level of legibility required in textbook
Blackboard	Blackboard-based learning activities
Ratio of teachers-pupils	Group and individual learning activities
No of pupils per class	Ditto
No. of classes per teacher	Didactic pointers in the teachers' guide
Teachers' working conditions	
Administrative responsibilities	Adaptation of material to availability of teacher
Didactic back-up materials	Preparing teachers to accept innovative ideas
Pupils' working conditions	
Location of school	Suitable format for pupil to carry to and from school
Ratio tables-chairs to pupils	Format of material, composition of set
No. of textbooks available	Pertinence of textbook production project
Other teaching materials	Attitudes of parents to school
Individual equipment	Identification of suitable writing tools
Target Groups	
Educational advisers	
Professional training	Level of innovation of material to be defined
Official duties	in terms of educational advisers' ability and
Supplementary duties	capacity to train teachers
Means of performing work (e.g. transport)	
Teachers	
Level of education	Degree of complexity innovation of material
Professional training	Contents and presentation of teachers' guide
Social background	Ditto
Integration in community	Ditto
Linguistic skills	Ditto
Motivation	Degree of innovation of materials
Pupils	
Social background	Topics contained in pupils' material
Focus of interest	Ditto
Linguistic skills	Linguistic contents of book, instructions to teacher
Previous knowledge, results in subject	Level and complexity of content matter
Economic duties	Topic-related and pedagogical contents
Parents	
Socio-linguistic features	Language taught/language of instruction
Level of education	Active support for children's education
Economic resources	Cost of material
Attitude to school	Planning information/awareness activities

Textbook Projects

Ideally in an educational project, the authors will be able to rely on a complete and reliable feasibility study; where this is the case they will be able to devise material appropriate for the needs and resources of the country on the basis of an examination of pre-defined factors. But authors may be called upon to produce a textbook on the basis of a less than perfect feasibility study, or where no real study has been conducted. In these cases they must also examine the project environment to avoid the pitfall of producing inappropriate material. Often this will not involve performing or repeating an entire feasibility study, but merely checking certain factors.

Table 12 lists some of the factors and aspects which we think are relevant in most cases, along with some essential questions which should be answered. Once again do not let this list discourage you; identify the factors that are important in your own specific case and, if you feel that a really exhaustive procedure is called for, consult the literature on the preparation of textbook projects that you will find listed at the end of this chapter.

> **Take a methodical approach: you can use the results of research based on this table as the foundation of your textbook**

Schools and National Languages

As we mentioned above[2], in 1985, 86 local languages were used as languages of instruction in sub-Saharan Africa. There are thus many textbook authors on the African continent working with a national language.

If this applies to you, it is vital that your preliminary analysis of the situation includes a linguistic component. You will have to find ways of solving the problems of using languages which are for the most part still little standardised in the classroom.

Again, the situation will vary from one case to another. Some languages, like Malagasy whose alphabet has existed in its present form for more than 150 years, have had an adequate system of transcription for many years, while others use several different alphabets, none of which is really adapted to the needs of primary schools. Other still have not yet been written.

Let us look at the steps to take if one of these languages is to be the language of instruction and/or the language taught.

Fundamental linguistic analyses

When we are dealing with a national language that has not yet been written, UNESCO[3] recommends that work be structured in Table 13 (page 52).

- Conduct a phonemic analysis which will be used as the basis for a scientific alphabet
- Conduct a grammatical analysis
- Prepare a preliminary lexicon.

12. Factors regarding the environment of a textbook project
Factors Aspects
Writing Conditions
Capacities of the curriculum unit
Will the unit undertake any revision of the curriculum, or will you be officially charged with this work?
Capacities of the publishing unit
Can the publishing unit perform all the tasks expected of it? What is the quality of its services?
Responsibilities of the group of authors
Which of the many activities presented in the first chapter are to be entrusted to the authors? Are any other bodies involved in producing textbooks for primary level?
Legal aspects
How are royalties and copyright regulated?
Production Conditions
Identification of sources of funding
Is the financing of the pilot version guaranteed? Is financing guaranteed or are there prospects of obtaining finance for the final version?
Size of the market
Are there reliable statistics on the number of schools and the number of pupils per class? Are there forecasts of the growth in school rolls? Has any research been performed on the financial status of parents?
Definition of conditions of use
Do you plan to produce one textbook for two or three pupils, or one per pupil? Will the books be bought or borrowed? Do you intend to set up a revolving fund?
Capacity and quality of preparations for printing
Does the printer have the capacity for typesetting? Photoengraving?
Capacity and quality of printing
Is the printer's equipment suitable for textbook printing? Is it suitable for printing large runs while maintaining high quality? Are the technicians properly trained? Can the printer operate competitively?
Inputs
Are all inputs required available on the spot? What is the quality like? Must paper be imported? Ink? Printing plates? etc.
Finishing
Is the printer equipped to finish books? In particular, what type of binding can he produce? Can the printer cope with a large run? Can he pack the books properly?
Distribution Conditions
National statistics
Does the unit in charge of distribution have reliable information on the school roll by school and region?
Precise information on transport routes
Are the precise itineraries known for the points to be served?
Organisational capacities
Does the unit have the ability to devise a distribution strategy? And to put it into practice?
Technical and financial resources
Does it have the means of transport to ensure distribution and/or the financial resources to have the materials distributed?
Teacher Training
Capacities of the teacher training unit
Who is to plan the necessary training activities to accompany the introduction of the revised material? Who is to conduct the training?
Capacities of future trainers
What is the level of training, experience and motivation of those in charge of teacher training?
Technical and financial resources
What technical back-up resources and what budget does the teacher training unit have at its disposal?

For this work you will need qualified staff and a great deal of time; it can take up to five years to devise an alphabet[4]. That is why this work must never be part of a textbook project; it is an indispensable prerequisite for launching projects in this field.

Preliminary linguistic work

Although it is out of the question for you as authors to transcribe a language, every time you use a local language you should examine the linguistic and socio-linguistic factors that are likely to have an impact on the teaching and learning process. On the following pages you will find a list of factors which you should pay attention to during this preliminary research phase, whatever the degree of standardisation of the local language you intend to use in your textbook[5].

Once again, you should adapt our suggestions to the case in hand; try to identify the factors of vital importance which must be examined without delay and those which are neither really urgent nor so important. You should realise that at this stage of your work, it is less a question of making immediate decisions regarding writing or vocabulary than of gathering data which will allow you to make the relevant decisions at a later date, in particular during the writing phase when you will periodically come up against linguistic difficulties.

> **No research work is an island: every issue will have immediately applicable consequences for your textbook**
>
> **In the absence of a feasibility study, you must also examine the environment in which the textbook will be used**
>
> **Examine the writing, production and distribution conditions particularly closely**

13. Textbooks in a National Language
Political Preconditions
Language of instruction
Is the national language in question officially recognised as a/the language of instruction for native speakers?
Languages taught
Which language or languages are taught? Will the national language be used purely as a medium of instruction, or will it also be one of the languages taught? Will primary school pupils also learn a world language? If so, as from which class and in what way?
Making the alphabet official
Is the alphabet of the national language you intend to use officially recognised? Is it accepted as such by users of the language? Do other alphabets co-exist with this one, and are they also known and used?
Promotion of the national language
Is there a clear political will to support work in the national language, and your work in particular? Are there any political activities to support national languages that go beyond mere declarations of intent?
Scientific Factors
Ensuring a pertinent and suitable alphabet
Does the alphabet selected for use in textbooks correspond to a scientific analysis of the language?
Functionality of the alphabet
Is the method of writing selected suitable for school-level learning or is it more in line with the needs of researchers?
Respecting variants
Have dialect variants been identified? Can the alphabet respond satisfactorily to their special features? What line do you intend to take in textbooks destined for nationwide use?
Conformity to other alphabets
Does the alphabet used for the national language in question differ from those used for any other national languages without good reason? Does it differ from the world language used in the country?
Spelling
Are there conventions for hyphenation? For contractions? For spelling loan words taken from a world language?

Punctuation
Has any work been done on standardising punctuation? Do the punctuation rules differ from those used by the world language used in the country for no good reason?
Institutional Factors
Training teachers
Does the training of primary school teachers include the study of the national language in question?
On-the-job training for teachers
Are there in-service training programmes to prepare teachers to teach in the national language in question?
Reference works
Is there a research institute responsible for producing reference books concerning the national language in question, in particular, grammar books and basic dictionaries?
Terminology
Is a unit or a body responsible for enriching the language, and in particular, for creating the technical and scientific terms that are vital for consistent, diversified, precise instruction? Are efforts being made to standardise these new terms?
Standardisation
Is a unit or a body responsible for standardising the national language, in particular, for proposing punctuation rules corresponding to the superstructure of the language?
Practical aspects
Characters
Can the characters used to write the national language in question be found on a standard keyboard?

4. Planning

The preceding phase will have enabled you to identify those factors which will have to be examined before you start writing your material.

You are thus now in a position to plan research activities; you should start by setting the deadlines, even if it is difficult to gauge the time that will be needed for certain activities, such as selecting a representative sample, and you may be forced to adjust your schedule at a later date.

To avoid getting bogged down in poorly prepared work or work that is not in line with your needs and your possibilities, you should concentrate on compiling as exact a schedule as possible, taking the following factors into account.

If you work in a local language, analyse the linguistic environment of the textbook

Base planning on practical options rather than wishful thinking

Institutional Priorities

The first textbook will require the greatest amount of research work, but it is also the book that will be most impatiently awaited. It is thus not unheard of for the institutions concerned, the Ministry of Education, and sometimes the donor to exert pressure on the authors to accelerate the preliminary research phase and complete the long awaited textbook rapidly.

It is not uncommon for an insufficiently standardised language to become the language of instruction, and for the scope of linguistic work to be underestimated by the education authorities - who nevertheless intend to meet their political commitments at any price.

You should of course plan your activities taking into account these pressures, but we have seen time and time again that ill-considered haste never pays off: the speed at which the work was performed is quickly forgotten, and all that remains are the shortcomings of the finished book. You should then consider carefully to what extent and how you are prepared to take into account institutional pressure, to ensure that the quality of your research work is not jeopardised.

Human Resources

You must also take into account the people involved when you plan activities.

The Authors

Field research will have to be performed by all the members of your team; even those who consider themselves well enough informed about the school situation must take part.

In this way you will ensure that all team members expand, deepen and update their knowledge, and that the group begins to come together, before going on to devise the material on the basis of a uniform level of information. If you do not harmonise points of view in the field you risk running into serious disagreements afterwards, particularly when you come to devise your material.

All authors without exception should be involved in field research work

Short-term consultants

It is rare for a group of authors to have the necessary skills to perform all preliminary research work independently. You should thus identify the aspects requiring skills only available outside your team.

In line with your needs you should make provisions for the sporadic help of a linguist if you are going to have to write textbooks in a national language which has still not been sufficiently standardised, of a sociologist to prepare the field research work, of animateurs who are familiar with the test area where you aim to gather data or of a statistician who will help you to process and interpret certain results.

It is up to you to identify the areas where you will need occasional assistance from other professionals. You must then contact the latter and ensure that they will be available when required.

Technical and Financial Resources

The research work always demands a minimum of technical and financial resources. You should thus evaluate the costs of the operation and not start planning until you are sure that you have the resources you need. In most cases you will need office supplies, a four-wheel-drive vehicle, enough funds to cover the costs of the mission and the fees for short-term experts.

Scope of Data to be Collected

When the schedule is drawn up for your activities, you will see the scope. One often tends to underestimate the time needed to process the data collected in the field, particularly when recordings have to be transcribed.

If you have to work in a national language which is still not commonly written, and you intend to record information, plan the recordings with a view to the follow-up work, i.e.

Transcription

Under these circumstances you had better calculate one hour to transcribe five minutes of recorded speech. If you delegate this work to individuals whose only qualification is verbal mastery of the language you must also think about approaching an experienced linguist to revise the transcriptions.

Analysis

The recordings, thus transcribed, will then be analysed in various ways. If you aim to produce a reading book you will have to pinpoint the words most frequently used by children, classify these words by length, origin (from a dialect variant, loan words, etc.), among other things. If you are unable to do this by computer, you will have to perform the work manually which will take some time.

Data Processing

All the data will have to be typed so that the authors can use it, before they start work on devising didactic material; this is a long and exacting secretarial task, the scope of which is often underestimated by authors.

You should bear in mind, when you draw up a schedule for your activities, that you will have to correct all the data that you collect. There is no point in conducting extensive research in the field if you cannot use the information you gather. You should thus always distinguish between what is possible, and what is desirable but unrealistic. Identify the research work which you cannot reasonably conduct and the work which can be postponed without any major impacts on your first didactic materials[6].

At the end of this phase you will have two schedules, the first of which will be a short-term schedule for the research phase. It will indicate the main research activities, the deadlines, the persons responsible and the evaluation of costs.

The second, medium-term schedule will concern the actual writing and production of the materials.

It is important to gear your work from the outset to the start of a specific academic year. You should decide on the first year of introduction and make absolutely certain that you do not miss it, and perhaps the date of publication for any second set of materials. You should then inform the education authorities as soon as possible.

Refer back to the first chapter and look at Table 3 (the birth of the *Garabola* textbook) as a yardstick to help you gauge how must time you should allow.

5. Instruments

The objective of the current phase is to develop the research tools which will allow you to examine, quantify or verify the data required.

The approach taken in the field of social sciences to define an analytical model is discussed in several specialised publications; if concepts, hypotheses and indicators are completely new ground for you, it would certainly be a good idea to consult a sociologist or to refer to the literature on this subject listed at the end of this chapter.

But you should not forget that research in the field should never be an end in itself, it is merely a means to an end - which is the production of textbooks that are in line with the needs and resources of the country. You should thus attempt to surround yourselves with the skills which will prevent you as far as possible falling into the traps of woolliness or arbitrariness during your research, but do not lose sight of the fact that you are above all authors of textbooks. Your primary target group is the pupils who are waiting for their books, while university researchers must be relegated to second place if they appear at all on your list. Let us retain our pragmatic approach and again make the distinction between what is desirable - a piece of work which is scientifically unassailable and will require a lot of time and experienced staff - and what is possible under the given circumstances. It is up to you to make the best of the situation, even if your resources are minimal (e.g. novice researchers, or the fact that you are not given all the professional back-up you would like).

Within the scope of this guide, we will introduce you to a relatively simple way to identify research tools which you can use in most cases.

Prepare functional and well-targeted tools
Consult specialised books to find out about tools

Data to be Verified in the Office and in the Field

You should start by differentiating between the data available in the office and those you will have to verify in the field, before going on to define the activities needed to analyse each of these.

14. Initial Break-Down of Tasks to be Performed
Data to be verified in the office - Activities
Education Policy
Analyse official guidelines[7]
1985 Official Curricula
Analyse the subject “Malagasy”
Analyse the targets for the first grade
Analyse the profile of the pupil at the end of primary education
Textbooks Used
Identify the main textbooks used
Define criteria to evaluate these
Analyse the most widely used in class
Pedagogical Directives
Inventorise, collect, exploit

Table 14 was drawn up to this end by the Tef'Boky Project. It could be useful to you for reference purposes.

Hypotheses, Indicators and Instruments

The above list still tells you nothing abut how to study each element. You should proceed as follows to determine how to approach the matter, i.e. how to identify the sort of instrument you will need.

Firstly you should draw up your hypotheses; these are sort of provisional answers, formulated in a relatively summary fashion, which you propose for each element to be studied, and which will later have to be verified in the field.

Secondly, you should define the indicators which will allow you to verify these hypotheses; indicators should be factors which are easily observable, verifiable or quantifiable.

Thirdly, and lastly, you should select the instruments which will allow you to verify the indicators you have just identified.

Let us take an example to better illustrate the links between hypotheses, indicators and instruments. Let us assume that you are required to verify that the pupils achieve the attainment target for handwriting at the end of the first grade, i.e. that they are able to copy a sentence on the basis of a model in cursive style, forming the letters legibly and understanding the meaning of what they write. You could then devise the following table.

Developing Instruments

You have identified the research instruments you need - now you can develop these.

Adapt the instruments for the case in hand

15. Identification of Instruments	
Hypothesis: Pupils achieve the official attainment targets for handwriting at the end of their first year of schooling.	
Indicators	**Instruments**
Time allocated for handwriting in the official time-table	
	Analysis of official curriculum
Importance attached to handwriting by teacher	
	Examination of pupils' exercise books
	Questionnaires
	Interviews with teachers
	Classroom observations
Importance attached to handwriting by parents	
	Inventory of equipment purchased by parents and available in classroom
Quality of handwriting	
	Tests involving copying a text
Spelling of certain common words	
	Tests involving dictation of words
Comprehension of texts copied by pupils	
	Tests involving the comprehension of a text

If you have little experience in the subject we recommend that you seek the support of a specialist. It is not easy to prepare instruments that are both appropriate for the survey conditions and targeted so as to give you the information you require.

Within the scope of this publication we will limit ourselves to giving a few practical hints and some examples taken from the work of the Tef'Boky Project.

Research Conditions

Instruments should firstly be designed with the investigators in mind. Sometimes you will have to involve teachers or educational advisers in your work, particularly as regards interviewing parents. You must thus design instruments on the assumption that however willing they are, they are novices when it comes to investigating, and will need tailor-made instruments, especially if you expect them to work relatively independently.

The instruments must, of course, also be tailored to the needs of those interviewed. It is up to you to identify instruments which will neither shock nor intimidate adults and children who are not familiar with investigations.

Finally you must take into account the conditions surrounding your research work, and take a pragmatic approach. If you have to be on the move for weeks on end, for instance, use only instruments that you can transport - no vast packages of tests and questionnaires. Sometimes you will not be able to use recordings because the logistics preclude this. To illustrate this, we have reproduced below a few pages taken from the investigation conducted in 1986-1987 by the Tef'Boky Project. Examine them carefully and identify the precautions taken at that time to ensure a minimum of uniformity of investigation conditions and to guarantee precise results - and see how you can adapt these to suit your own circumstances[8].

Do not underestimate the importance of physical and logistical considerations
Nothing is too self-evident to ensure that the instruments are properly used

Preliminary Testing

You now have research instruments, but no guarantee that they are precise enough or suitably tailored to your investigators and to the people investigated to give you the data you need.

For this reason you should organise a preliminary test run with the instruments, especially those aiming to evaluate school attainment levels. We recommend a test run in at least two schools offering teaching and learning conditions that can be considered representative for the country as a whole, which will usually mean moving away from urban areas.

To ensure that your instruments really work as intended, you may have to modify them, and then organise a second test run. This may prove impossible however. In our experience every expedition demands time, human resources, funds and organisation, and it is rare for projects to have the free time and the resources for a second test run.

Select a sample for your investigations

The Final Instruments

You are now ready for the final step in preparing your instruments. Modify them on the basis of the preliminary test runs and prepare a sufficient quantity for the number of villages and/or schools which you should now identify. It is generally a good idea to put together all the instruments to be used at any one location in one file; this will prevent the investigator misplacing documents or wasting time looking for them in front of those he wishes to interview - an embarrassing situation which can happen to even experienced investigators, and is bound to happen to novices unless you give them proper back-up.

> **Take great care with attainment tests; the education authorities are always particularly interested in these results**

1. List instruments which will guide the investigator.

File No. 2 Instruments for Field Research Work

Investigation conducted by...
Period: from to...

List of Instruments

To give you an overview tick the relevant box after each instrument has been used

1.	Instrument Group 1 Collecting data at CIRESB	○
2.	Instrument Group 2 Collecting data from animateurs in the area	○
3.	Identification sheet The village / the school	○
4.	Instrument Group 3 Target Group: Grade-one teachers	○
5.	Instrument Group 4 Target Group: All teachers	○
6.	Instrument Group 5 Target Group: Parents	○
7.	Instrument Group 6 Classroom observations (grade one)	○
8.	Instrument Group 7 Cultural features - inventory	○
9.	Instrument Group 8 Linguistic, cultural, etc., profile	○
10.	Instrument Group 9 Aptitude test	○
11.	Instrument 10 Test-decoding graphic representation	○
12.	Instrument 11 Reading test	○

13. Instrument 12
Concerns and interests of pupils ○

14. Instrument 13
Writing test ○

15. Instrument Group 14
Physical working conditions at the school ○

2. Recall the hypotheses to be verified on each file

INSTRUMENT GROUP 5
Target Group: Parents
Method: Interview based on questionnaire

QUESTIONNAIRE NO. 1
Objective:

Verify the hypothesis: Parents have low incomes.

Instructions:

1. Take one family per economic stratum (and one form per family)

rich ○ average ☒ poor ○

2. Select families on the basis of information given by teachers, community workers and VIP

1. Family situation

Sex	Number	Members of Family	Dependent Children	
			At School	Not at School
Male				
Female				

Comments: ....
....

2. Income-generating activities

Importance / Activity	Agriculture	Animal Production	Crafts	Fishing	Commerce	Miscellaneous
Main activity						
Secondary						
Tertiary						

Comments: ....
....

3. Formulate questions precisely and give enough space for answers

3.1.4. Course of lesson:
Did the teacher revise subject matter?
Yes ○ No ○
What did he take as the starting point?
Real-life experience ○

Text ○
Engraving ○
Short story ○
Observation ○
What phases did he then go through?
Expression ○
Exploitation ○
Application ○

3.1.5. Method
The teacher called on pupils' experience ○
The teacher guided pupils ○
The teacher developed the subject alone ○
A dialogue emerged between teacher and pupils ○
between pupils ○

3.1.6. Behaviour and attitude of pupils
Most pupils participated ○
Some pupils participated ○
No pupils participated ○
Pupils reacted in the following ways
They wanted to speak come what may ○
They waited to be asked ○
They responded spontaneously ○
They responded hesitantly ○
They repeated what the teacher said ○

Comments: ....
....
....

4. Allow enough space for comments which do not apply to any of the individual questions

SUPPLEMENTARY QUESTION No. 3

Ask the teacher how he goes about solving the major difficulties encountered by pupils learning to read.

....
....
....
....

IN THIS CONTEXT NOTE THE FEATURES THAT STRUCK YOU MOST IN THE COURSE OF THE READING LESSON, WHICH YOU CONSIDER INTERESTING BUT DID NOT FIT INTO ANY OF THE OTHER QUESTIONS

5. Give investigators written detailed instructions

File No. 2 Instruments for Field Research Work

INSTRUMENT No. 12
Target Group: First-grade pupils
Type of Instrument: Test

Objective:

Verification of the hypothesis:

Children in rural areas have specific concerns and interests (2213)

Guide:

1. *Materials:*
   Sheets of paper
   Pencil
2. *Instructions:*
2.1. Separate children as far as possible to avoid copying
2.2. Hand out per pupil
   1 sheet of paper
   1 pencil
2.3. Ask the children to draw
   • their favourite *person:* WAIT 10 min.
   • their favourite *animal:* WAIT 10 min.
   • their favourite *thing:* WAIT 10 min.
2.4. At the end go and see *every* child
   • Ask him/her to explain *each* drawing to you.
   • Record the explanation on the sheet of paper (e.g. grand-father, pig, flower)
   • Add the age of the pupil.
   • Collect papers

6. Prepare forms as a record of documents

File No. 2 Instruments for Field Research Work

RECORDING RECORD SHEET

Label your cassettes!

List them in this record sheet and fill in the relevant information!!!

Place	Cassette No.	Date	Child Recorded			Subject
			Male	Female	Age	

16. Testing Attainment Levels
Among your instruments you are bound to have some tests to evaluate the attainment levels of schools. You will test the level of the class for which the new material is to be produced, to determine whether or not the pupils have achieved the official targets in the relevant subject so that the new textbook can be designed to bridge as many of the gaps thus identified as possible and/or to improve existing skills. Design these tests with care, and ensure that they are systematically applied and rigorously interpreted. Since evaluation tests are the focus of an expanding field of research, the suggestions below cannot be considered exhaustive. We will merely look at ten aspects concerning the contents, the mechanism and the interpretation thereof, which we feel are of particular importance.
1. Congruence with objectives
All tests taken together must allow us to determine whether or not the pupil has achieved the attainment targets, as laid down in the official curriculum for the subject and the class concerned.
2. Pertinence of tests
Each test should correspond to one specific, clearly formulated objective which will, in its turn allow you to determine whether or not the general target has been achieved.
3. Reflecting the pupil's world
The tests should only involve elements with which the pupils are familiar, or which are at least known to them.
You should thus naturally avoid tests concerning the arrangement of seats in an aircraft, or the keyboard of a computer, but also other objects which may still not be common in certain places, such as showers or calculators.
4. Interpreting illustrations
Illustrations must be unequivocally understood by pupils. They must correspond to the cultural and psychological perception of the children. Pay special attention to the use of techniques such as movement or perspective which could be wrongly interpreted.
5. Duration
The duration of the tests should take into account the pupils' concentration span.
For instance, 20 - 30 minutes should be allowed for all reading or writing tests in grade one of primary schools, interspersed with short breaks.
6. Preparing the investigators
All investigators should conduct the tests in as similar a way as possible.
There are two ways of preparing investigators; call a meeting of all investigators before leaving to perform the field work, at which the procedure to be followed is repeated once again; and print the instructions on how to conduct each test at the top of each set of tests.
7. Preparing the class
The investigators must be able to create an atmosphere of trust which will allow the pupils to sit the tests in relatively satisfactory conditions.
They must then be fluent in the pupils' native language, and be able to explain clearly to the teacher and then to the pupils what they are expected to do, and encourage them without putting an answer in their mouths; if so decided in advance, they will be able to instruct the teacher such that he can conduct the tests, while the investigators merely observe.
8. Explaining the exercises
Each type of exercise will be introduced on the blackboard, while every pupils should solve it in writing.
To distinguish between understanding the mechanism and the knowledge or skills of the pupil, all exercises should be presented systematically on the blackboard, even where the mechanism appears to be self-evident. The investigators should always check to ensure that they do not present any particular comprehension difficulties.
9. Pupil profile
An individual information slip will give the information needed to interpret the results.
Remember to note the age and sex of the pupil, whether he or she is repeating the year, attendance rate at the school, and if appropriate language skills.
10. Systematic collation and interpretation
To allow you to organise and interpret the results a points system should be drawn up, not when you come to process and interpret the results but when the tests themselves are devised. This system, and the interpretation of the results must be simple and clear enough for the education authorities, who do not necessarily have any statistical training, to understand them.

6. The Sample

Now your instruments are ready, and you can identify a sample of schools in which to use them.

Why do you need a sample? Firstly, of course because it would not be feasible to gather information from every school in the country, and secondly to ensure that the information you obtain is representative for the country as a whole. Certain sample selection techniques will enable you to identify a zone where you can gather reliable data which will reflect the situation throughout the land. Finally, a sample will enable you to count on the long-term support of those concerned; you will need a representative group not only for the preliminary tests, but also to test the materials you produce one after the other. You can only create a good feed-back system if the sample selected does not change significantly over a period of several years.

We suggest that you select your sample in two stages, as follows.

Defining Selection Criteria

> **Select your sample with care; you will have to work there over a period of several years**

When you come to select zones and schools as part of your sample, you should firstly define your selection criteria. You must proceed with great care since this sample is going to be your laboratory not only for the research work at this stage, but also for testing the pilot textbooks at a later date.

Again, try to make the best possible use of our hints; look for feasibility, representativeness, sustainability, and the support of those concerned, each of which we will look at in more detail below, and decide which are the most important criteria for you.

> **A good author is also a good organiser: what is the point in preparing good instruments if you don't know how to manage the application?**

Feasibility

A good sample should not overtax the available resources and possibilities of the textbook production project.

Look at

- the geographical proximity of the test zone: the distance between the test zone and the project headquarters should be such that the authors, and perhaps also the animateurs and some teachers can easily commute between the two on a regular basis.

- the ease of access to all the schools selected: you should only select schools which you can reach in one day without major transport problems.

- the size of the sample: the number of schools selected must be limited to allow relatively regular monitoring of each one of them over a period of several years.

Representativeness

A good sample must allow you to gain a global impression similar to that you would have obtained had you been able to look at every individual school in the country. Look at

- the teaching and learning conditions: the teacher to pupil ratio, the number of pupils per class and the number of classes per teacher, as well as the status of the schools (private or state for instance), must correspond to the national statistics, or where there are none, to the conditions observed in at least two other regions of the country.

• language and culture: the linguistic and cultural practices of the sample must reflect those found at national level. This may be a thorny issue if the global target population is spread over a large area which tends to encourage cultural and linguistic variations.

• the professional and economic profile: the professional occupations and income of those observed within the sample must reflect those of the majority of parents throughout the country.

• experience of scientific work: if the test zone is a preferred area for research and testing, the inhabitants may have adopted certain mechanisms which do not reflect the situation of the population as a whole; if it was the test zone for a failed education project, it would be preferable to select another zone.

Sustainability

To ensure that the sample remains representative over a period of several years you should try to guarantee:

• a sufficiently large initial sample: in the course of time, some villages or some schools will, for various reasons have to be dropped; in some cases the villagers will demand that they are dropped to avoid official visits, in others the sudden and prolonged absence of a teacher or the closure of a school will force you to take this step. To allow for these defections, it is imperative that the initial sample be relatively large.

Agreement and support

Finally, to allow you to conduct your work, you must have the active support of teachers and parents, without which no cooperation is possible, or at least no good cooperation.

Determining your Sample

On the basis of your selection criteria, you should identify a few zones which could be taken as a sample.

You should make your final selection in the field, once you are certain that your choice is a good one and that you have the active support of the education authorities, teachers and parents.

From the outset, you should bear in mind the fact that you stand on the threshold of cooperation between your working group on the one hand and the village and its school on the other, which is likely to last several years. You must thus make an effort to create an appropriate climate of respect and trust.

7. Gathering Data

The quality of your work in the field will naturally depend to a great extent on the quality of your instruments. But, if you ignore the logistical and material aspects of the mission, your instruments, however perfectly honed, may be ineffective.

We would thus suggest that you plan your field trip meticulously and that you evaluate it periodically, in the following way.

Preparing Materials and Logistics

Think of your field research work as a project. To ensure success, the project must be prepared and implemented systematically; you must plan everything from the daily visit schedule for each investigator down to the last detail that every team member will need if they are to go and live and conduct investigations in a village for several days at a stretch. One oversight may cause serious delays in your already busy schedule.

Field Monitoring

As far as possible you should organise regular visits to check that things are running smoothly for each investigator; they may be faced with surprises, a school may be closed or villagers may be hostile when confronted with an outsider, for instance, which may make it necessary for the investigator to leave the village rapidly.

Regular Comparing of Notes

Regular meetings should be held to discuss progress. A weekly report before returning to the field, for instance, allows the team members to swap the most important information and, if necessary, modify the way some instruments are applied, add more instruments or drop some.

8. Results

You must now process and interpret the results of the data your team have collected in the field. This is a relatively long phase - it took some 4 months in the Tef'Boky Project - and must be conducted rigorously and meticulously if all the work to date is not to be nullified.

Some teams will call on the services of specialists to help them interpret the statistics, or guide them in their linguistic work, for instance. Be this as it may, you should think of the data you have collected as being at once extremely precious and far from complete.

Major Indications

The results that you will obtain will undoubtedly give you relevant information on the school situation. This makes them vitally important and you will find them useful not only for one textbook but for an entire textbook production project.

But you must not fall into the trap of thinking of them as complete and irrefutable. The situation will rarely allow you to do so. For example, let us assume that you have evaluated school attainment levels; your battery of tests may be appropriate and your results differentiated (girls/boys; school-age children/ significantly older pupils; pupils repeating the year/pupils enrolled for the first time; pupils who have lived in the area for some time / pupils who have recently moved to the area; pupils whose mother tongue is the language of the tests/ pupils who are learning the language, etc.) but the population tested will not necessarily remain the same (different pupils sitting different tests, etc.), and neither will the school environment (prolonged absence of the teacher, school closed periodically, etc.).

Since the results you obtain will not give you an image which corresponds exactly with the reality, you will constantly be trying to enrich your data and make them more precise.

You should thus consider your research work in the field as the foundations for the new didactic material, but take care not to stem the flow of information.

During the conceptual phase and after the writing phase you should call on animateurs and some teachers who you will have identified during the field work, to confirm or refute certain results. Afterwards, when the material is tested, you should conduct classroom observation, talk to teachers about using the new material, and finally, of course evaluate the functionality of the material with the help of evaluation tests.

Thus, step by step, you will complete the mosaic of which the field research was the first piece.

The results of the investigation must be complete and precise

9. In Conclusion

A Reference Document

The results of field research work are rarely published; so as not to waste time, the authors generally make do with a preliminary version, on which they base the conceptual work.

Yet, the results should always be documented in the form of a particularly carefully put together publication. Field research work often provides information which is new or which those in authority prefer to overlook in the capital, where major decisions are made. The findings may have repercussion for certain parts of the school system. For instance, the discovery that the actual learning time is half the official learning time could lead the authors to propose a revision of the official attainment targets, a decision which the education authorities would be reluctant to make.

The report on field work here becomes a piece of evidence which the authors can use to explain, justify and even defend some of their proposals; it is a vital document which cannot be replaced by verbal explanations or the raw and uncollated results of research.

It is thus often a good idea to end this phase by publishing a document which should be accepted by the education authorities: having been prepared and implemented with care, the research work must be presented in this document with the necessary professionalism.

Document your research

Notes

[1] According to Landsheere, "A curriculum is a collection of planned activities for instruction, comprising the definition of teaching targets, the content matter, the methods (including evaluation), materials (including textbooks) and the arrangements for suitable training of teaching staff. In *Dictionnaire de l'évaluation et de la recherche en éducation,* p. 65. Paris: PUF.

[2] Cf. Introduction.

[3] Cf. Sow, A.I. *Langues et politique de langues en Afrique Noire,* p. 46. Paris: Nubia/UNESCO, 1977.

[4] "Some five years are needed to fully describe all the sounds in a language that has never been written." *Langues et politique de langues en Afrique Noire,* op. cit. p. 39.

[5] In this context the work performed by the German-Peruvian Bilingual Education Project from 1979-1989 provides interesting practical information; cf. Châtry-Komarek M. *Linguistische Faktoren bei der Erstellung von Schulfilbeln in Vernakularsprachen,* Osnabrück: Osnabrücker Beiträge zur Sprachtheorie 31, 1985 and Intentos de codificatión del quechua en libros escolares. In: Lopez, L.E. and Moya, R. (Ed.) *Pueblos indios, estados y educación,* Lima, 1989.

[6] In the German-Peruvian Project mentioned above, the authors of the reading books in Quechua would have liked to conduct research to identify punctuation responding to the supra-segmental characteristics of the language, which had not yet been sufficiently standardised. However, because of the lack of resources and time available, they were forced to write the textbooks for the first three grades of primary school without the assistance of this important research.

[7] The Charter of the Malagasy Socialist Revolution, published in 1975 in Madagascar, advocates democratisation, decentralisation and Malagasisation in education, for instance.

[8] These instruments prepared in 1986-87, were reproduced in their entirety in the third book of the *Garabola* series, entitled *Les Dossiers I.*

Recommended Reading

Preliminary Work for Textbook Production

AFOLAYAN, A. The Six-Year Primary Project in Nigeria. In: BAMGBOSE, A. *Mother tongue education.* London: Hodder and Stoughton and Paris: The UNESCO Press, 1976

FARREL, J.P. AND HEYNEMAN, S.P. (Ed.) *Textbooks in the Developing World.* Washington D.C.: The World Bank, EDI Seminar Series, 1989

KOMAREK, K. (Ed.) *Les dossiers I.* Eschborn, Antananarivo: GTZ, 1993 READ, A. *A guide to textbook project design and preparation.* Washington D.C.: The World Bank, 1986

RIEDMILLER et al *Diagnóstico sociolingüístico del área quechua del departamento de Puno.* Lima, Peru: Instituto Nacional de Investigación y Desarrollo de la Educación, 1979

Linguistic Research

CALVET, L.J. *La guerre des langues et les politiques linguistiques.* Paris: Payot, 1987

COULMAS, F. *Linguistic minorities and literacy: language policy issues in developing countries.* Berlin: Mouton Publishers, 1984

COULMAS, F. *Sprache und Staat. Studien zur Sprachplanung.* Berlin: W. de Gruyter, 1985

RUBIN, J. Textbook writers and language planning. In: *Language planning.* Rubin J. et al (Ed.) The Hague: Mouton Publishers, 1977

SOW, A.I. *Langues et politique de langues en Afrique Noire.* UNESCO/Nubia, 1977

UNESCO *L'emploi des langues vernaculaires dans l'enseignement.* Paris, 1953

Research Instruments

BOUDON, R. *Les méthodes en sociologie.* Paris: PUF, Coll. “Que sais-je?”, 1969

GRAWITZ, M. *Méthode des sciences sociales.* Paris: Dalloz, 1984

QUIVY, R. AND CAMPENHOUDT, L.V. *Manuel de recherche en sciences sociales.* Paris: Bordas, 1988

Preparations for Investigative Work in the Field

CHAMBERS, R. *Développement rural. La pauvreté cachée.* Paris: Karthala, 1990

To Sum Up

When the education authorities of a developing country decide to produce a textbook for primary level, they turn to a group of individuals, generally inspectors and educational advisers, and often expect them to produce a high-quality product within a few months.

Mission impossible. The team which has just been set up, is never able to start the conceptual work immediately. Indeed, this newly born entity will have to conduct a long and difficult mission, the need for which has not generally occurred to the education authorities, involving the following.

Firstly a genuine working group must be set up, without which no textbook, no matter how mediocre, will see the light of day; this presupposes that the authors identify the mechanisms which will allow every individual to contribute his and her best to the team throughout the several years of in-depth cooperation.

Then, although the authors are almost always recruited from the ranks of the teaching profession, they cannot have the in-depth, complete and systematic knowledge of the target group of the textbook that they will need. They will have to devise, plan and manage research on the lesser known aspects of day-to-day school life, collate these in a systematic form and interpret the results.

Finally, although no decision should ever be taken to produce a textbook before a serious feasibility study has been conducted, and before ensuring that certain preconditions are met - things often look different in practice. The feasibility study is not complete, sometimes no study has been conducted; it is the authors who often have to bridge these gaps.

In the best case scenario, the authors will need one full year to complete their research, the quality of which will largely determine the quality of the book produced, in particular the degree to which it is in line with the needs and possibilities of subsequent users. The sheer scope of this work explains why some teams of authors take only the unprocessed results and race on to the conceptual phase without further delay. But, the results of the research should be scrupulously documented and presented to the education authorities to enable them to understand the pedagogical choices reflected in the textbooks.

The Contents

The conceptual phase is often welcomed as a deliverance by groups of textbook authors: after all these months of research, they believe that they can develop the materials relatively rapidly. More often than not they are disappointed, for months of hard word are needed to produce a textbook or a teachers' guide, as you will see in this chapter.

For didactic reasons, we will break down the conceptual phase into two parts and deal with each part in two separate chapters. The first will look at the contents, while the second focuses on the form, as though the two were not related. In fact the final form and contents of a book emerge from the very interaction between these two fields. Also for didactic reasons we have decided to present the work involved in a more or less logical sequence. Textbook teams generally take a “spiral” approach which allows them to lay down the rough structure of the material progressively. This approach involves taking one step back at regular intervals to ensure that every important factor has been taken into account, to re-analyse these factors, weigh them up again and then make the appropriate decision.

You should read this chapter without losing sight of the fact that the order in which the work is presented will never be followed to the letter in practice.

> **Take a “spiral” approach to determining the contents of your textbook, always going back to re-examine your decisions and ensure they were correct**

1. Time Management

Time is the first aspect you should examine in the conceptual phase. The objective of this phase is to draw up a precise frame of reference for the time effectively allocated to the subject in hand.

Why, you may ask, should our first step be to analyse the time available rather than the contents of the materials we aim to produce? Firstly, because you will not generally have detailed data on the effective learning time dedicated to the subject for which you are producing new materials, and secondly because it would be imprudent to launch yourselves head over heels into an analysis of the contents of the material without first defining the general framework, and in particular the time available for the teaching of the subject in question per academic year and per week.

Consider the following aspects which will allow you to identify the time frame, step by step.

> **The first element to look at when deciding on the contents of your book - the time factor**

The Academic Year

You should start by counting the number of teaching weeks available for the new material. To this end, consult the official curriculum which will probably state the official number of teaching weeks.

This figure is often more a recommendation than an absolute prescription, however. It may not take into account even official interruptions such as exams or once-a-term upgrading meetings for teachers.

To identify the effective length of the academic year you will also have to look at the statistics of the Ministry of Education regarding pupil attendance, and to analyse the data you gathered yourself in the field. There may be a wide discrepancy between the official number of teaching weeks and the number actually observed in the schools. You must then decide on the figure on which you wish to base your textbook.

At this stage you should be aware of the fact that any decision to base your work on the "shortened" school year may have serious repercussions: a reduction in the number of teaching weeks may entail a radical modification of the attainment targets for the entire primary cycle[1].

You should also consider the "legality" of your decisions. Even if you are involved in a pilot project, which by its very nature needs a certain scope for action, you should check to what extent you are required to move within the confines of the official remit and to what extent the education authorities will allow you to work outside an official framework, even if it is considered outmoded or erroneous.

If you feel that you should introduce innovations, try to analyse the situation so that you can decide when to inform the education authorities of the changes introduced in your material: sometimes it may be prudent to keep them informed of your intentions, while under other circumstances new ideas may have a better chance of being accepted if you remain silent until the pilot material is presented. This is a vitally important consideration which applies not only to defining the time-frame, but to the entire conceptual phase of your work.

Time-Table

Having decided on the number of teaching weeks you wish to take into account in your new textbook, you should examine how schools manage this time at present.

In many industrialised countries all pupils follow the same officially prescribed time-table, which has not been substantially altered for several decades; textbook authors do not then generally have to worry much about the time aspect. The situation is often different in developing countries, where pupils do not necessarily all follow the same time-table, and where the official time-table or time-tables is or are not always observed in schools. In some countries, for instance, one group of pupils follows a so-called "full" time-table (5 hours a day), while another group follows the so-called "short" time-table (3 hours a day), and a third group follows an even more seriously slashed time-table with only one or two hours instruction a day[2].

Sometimes this practice is officially sanctioned, but the existence of several different time-tables rarely has any impact on the level of attainment targets. To avoid any form of discrimination, the education authorities set the same targets for all groups.

Make the distinction between official guidelines and practice in the field

This situation directly affects your work as textbook authors; you will be tacitly expected to produce materials which will allow different target groups to achieve the same targets at the same time.

At this stage you should concentrate on a thorough examination of the official guidelines and the general practice in schools to allow you to decide which timetable or time-tables you wish to take into account in your material. Do not take this decision lightly. If you discover that the majority of your target group follows a short time-table, and you wish to take this into account in the material you produce, you will be opting for a drop in the volume of knowledge to be acquired, which will in turn have repercussions at the level of the education authorities, the teachers, parents and pupils. Do not hesitate then to take one step backwards and check that your decisions are correct, if not legal, correcting them if necessary. You still have time.

Breaking Down the Time-Table

This is the third aspect you will need to bear in mind when determining the contents of your materials and the sequence in which you aim to present them.

Not all official curricula follow the same procedure here; some indicate only the overall time allocated to each subject, while others lay down the time allocated to every component of every sub-topic, i.e. for the subject “mother tongue” the latter would not only stipulate the time to be allowed for reading, writing and speaking and listening, but would also break down the time reserved for writing into the time earmarked for handwriting, vocabulary, grammar, spelling, conjugation and creative writing. We recommend that you analyse the type of break-down found in your official curriculum.

Sometimes the break-down may surprise you, since it does not correspond to the methodological approach you had intended to take. Let us take an example. If you are to produce reading and writing materials for grade one, would you leave “handwriting” in the field of “art” as prescribed in some countries, or would you integrate it into your textbook, thus saving valuable time? You must of course specify the methodological approach you intend to take, but at this stage it is vital to know which subject “handwriting” is deemed to be part of before you can tackle the issue of the total time allocated for your subject.

These considerations may appear pointless to you if it is only a question of adding half an hour per week to the total time allocation for the subject; they may indeed be of secondary importance when the academic year comprises 35 weeks with a 27-hour school week, but they are anything but superfluous when the pupils spend no more than 15 hours a week at school and the school year is no longer than 24 weeks. Thus, again, take great care making your decision.

We should add that the approach you take must again be tailored to the circumstances. Sometimes you will have to consult with your colleagues who are responsible for producing textbooks for other subjects and/or with the curriculum development unit. Sometimes you will be unable to engage them in a real dialogue and your efforts to harmonise the procedure adopted for various subjects will be doomed to failure such that, to avoid paralysis, you may choose to confront the others with a fait accompli[3].

Number and Length of Lessons

Now you know the time-table to be respected and the overall time to be taken into account for your material. Would it then be appropriate at this stage to determine the exact number and length of lessons per week reserved for your subject, and to draw up a sort of time-table?

This sort of break-down is generally useful. If the subject in question is the “Mother tongue”, which is traditionally made up of speaking and listening, reading and writing, which tend to overlap, it becomes indispensable. Before you can define the content matter to be learned in each of these sub-topics, you will need a detailed framework. If you are also addressing pupils following different time-tables you will not be able to progress in a coherent manner without determining the number of sessions within each of the time-tables to be taken into account.

Table 17 should help you better understand the importance of our recommendation. It shows how to break down two different time-tables so as to produce a single textbook for all pupils[4].

Official Teaching Time

This is the last analysis you will have to perform regarding time management in schools[5].

It is indispensable to know how the teacher officially breaks down his classroom teaching time. To calculate this you must know the number of pupils and classes he is in charge of, and if appropriate the amount of administrative work he has to perform. To this end you should once again consult the official statistics and compare them with your observations in the field.

Check the legality of your decisions regarding the time to be taken into account for your textbook

Write a textbook that addresses all pupils in the grade whatever time-table they follow

17. One Textbook for Two Different Time-Tables

In Madagascar, the official 1985 curricula refer to a short time-table of 3 hours a day and a full time-table of 5 hours a day. It follows that the length of time dedicated to each subject depends on the working conditions: in grade two of primary schools 10 hours and 50 minutes a week are reserved in the full time-table for learning the mother tongue whereas only 5 are available for pupils following the short time-table.
When materials were devised for this grade the authors of the Tef'Boky Project decided to design a “common core” of texts to read, and speaking, listening and writing exercises for all pupils, with supplementary activities for those following the full time-table.
To this end they analysed the time officially allocated to speaking and listening, reading and writing in the two time-tables and drew up two plans so as to allow for at least one lesson of more of less identical length per day for each of these sub-topics, to be followed by all pupils.
The temporal framework for the new materials to be produced was as follows:

Sub-topic	**Full Time-Table**	**Short Time-Table**
Speaking and listening	5 x 20 min. 5 x 10 min.	5 x 15 min.
Reading	10 x 25 min.	5 x 20 min.
Writing	10 x 25 min.	5 x 25 min.

On the basis of this table the team produced an initial break-down of the subject matter to be taught and learned, i.e.

- in the textbook: for each of the 24 weekly modules, two pages for reading and two pages for writing, each corresponding to five 20-minute lessons, i.e. applicable for all pupils no matter what time-table they follow.
- in the teachers' guide: on the one hand the instructions for exercises common to all pupils, and on the other hand additional speaking and listening, reading and writing activities addressing primarily pupils following the full time-table.

We should underline the fact that it is less the average class size which is important for your textbook than the average number of classes per teacher. Your approach will not change significantly whether there are 30 or 70 pupils in one classroom provided they belong to the same class. On the other hand, if the majority of teachers are in charge of more than one class at once, you must take into account the fact that they will have to teach these classes parallel to one another, which will mean eliminating or strictly limiting certain activities such as exercises or practical work out of doors. You will have to encourage more independent learning from the very start, and give the teachers very detailed instructions on how to manage the class in the teachers' guide. If one-teacher schools make up the majority of your target group this is the only way to take this fact into account.

By the end of this phase you will have identified the temporal framework within which your material will be used; we recommend that you record your results in the way suggested in the second chapter. This will allow you to refer back to them at a glance.

Use the pinboard for all conceptual work

2. Methodological Approach

The aim of this phase is to identify the methodological approach which you intend to adopt.

Why, some of you will ask, should we once again delay looking at the content matter, and look first at the methodology. Before you can rationally decide on the contents, you must lay down the approach, for this can have major repercussions on the volume of knowledge to be acquired.

To illustrate this let us take the example of first-grade mathematics: you must decide whether to accord priority to calculating rather than counting, i.e. if your aim is to teach pupils to find solutions to problems rather than merely to count. This decision will have a direct impact on the subject matter, which you will define in the course of the following phase: in the latter case the child will have to learn to count to 100, while in the former he will probably only be able to count to 20, or 50 at the limit.

We will not go any deeper into subject-specific considerations here, but we will comment briefly on the points that you should analyse when selecting a methodological approach no matter which subject you are tackling.

Practice in the Schools

Your preliminary field research should have provided you with information about practice in the schools.

You should look at the preferences of teachers of the subject, any weaknesses in the methods generally employed and the principal difficulties encountered on the one hand; on the other you should analyse the level of training of teacher trainers, educational advisers and animateurs and their working conditions, in particular as regards the budget and the material inputs allocated to them for training activities. As we will see later, this information will have a significant impact on your choice of an approach.

Subject-Specific Research

You should not be satisfied with merely adopting the methods currently advocated by teachers, and will thus have to undertake some research into the main trends in international research in the relevant subject. You should consult not only specialised literature, but also textbooks recently published in other countries if possible.

Level of Innovation

Analyse the level of innovation that is likely to be accepted by teachers as regards methodology - the level that they will accept and understand. To this end you will have to be able to bring the scientific findings for your subject into line with the current practices in the schools.

Sometimes you will have to opt for a relatively low level of innovation. If the teachers are poorly trained, and badly paid and if only limited funds have been budgeted for training, the approach you select must be familiar enough to teachers for the textbook to be accepted immediately, and used without a systematic introduction. Any complete break with current practices, which would require a great deal of additional effort on the part of the teachers, is unlikely to be accepted under these circumstances.

We cannot stress the importance of this enough; remember how reading books adopting an overly analytical method, or materials for maths using the theory of sets have failed when introduced to poorly trained teachers, largely as a result of the high level of innovation in terms of methodology.

> **You should preferably select a traditional methodological approach with a limited level of innovation**

3. Defining Content Matter

Having defined the temporal framework and the methodological approach you can now go on to the next phase, which will aim to stipulate the volume of knowledge to be acquired for the subject and grade in question given the practical options and limitations of existing schools on the one hand, and the expectations of those involved on the other.

There are several different aspects which you will need to look at to help you identify the subject matter progressively.

Current Curricula

You should start by analysing the subject matter laid down in the current official curricula.

> **Don't modify the contents of the official curriculum without first checking how much leeway you have**

In industrialised countries authors merely adopt the contents of these curricula without checking whether or not they are relevant. Indeed one of the first criteria applied when evaluating their products is the extent to which it corresponds to these official directions.

In developing countries, however, the situation is not always so clear. It is not unusual to find that the contents of official curricula do not tally with the actual learning conditions for a variety of reasons, such as the country's colonial past. The official learning time, for instance, may be at odds with the actual time available in practice. Where this is the case it is preferable to propose that the official curriculum be modified. Some specialists even recommend that textbook projects should be more or less systematically preceded by a full-scale overhaul of the national curriculum where needed, which can be expected to take some two years[6].

As textbook authors you are not normally responsible for curricular revision; generally the ministry delegates this task to a special unit. But, experience shows that this is not always the case. Indeed relatively often in developing countries textbook authors find curricula that are hopelessly out of step with the reality of the education system in their country, and the curriculum unit declares itself unable to modify them[7]. Where this is the case, the authors themselves must revise the relevant curricula on a pilot basis to avoid producing textbooks that are inappropriate before they have even been published.

Be that as it may, analyse the situation thoroughly. It is now more important than ever before to gauge the leeway you have and, if you see yourself forced to reduce the volume of content matter covered gird your loins for major repercussions in the classrooms and negative reactions outside - as described below.

Temporal Framework and Learning

If the time effectively available is significantly less than that stipulated in the current curricula, you will doubtless intend to reduce the subject matter to be covered correspondingly. You should, however, bear in mind that a decision of this sort will have major repercussions on the teaching and learning process which we will now look at in more detail.

> **Do you intend to opt for progression in step with pupils' progress, which is difficult to reconcile with a rigorous learning programme?**

The shorter the time effectively available for learning, the more rigorous your planning must be to guarantee that pupils acquire a minimum of knowledge, without which the school would not be meeting its commitments. This inevitable strict planning of learning time does have its advantages: it allows you to produce a detailed methodological guide for teachers, for instance, a sort of script which is bound to be a valuable aid to teachers who are often poorly trained.

This planning does, however, also have one major drawback: the teacher becomes a prisoner of the clock. He cannot take more time or repeat a lesson, without running the risk of jeopardising the entire course. He thus cannot adopt a “mastery” approach, according to which “generally a learning unit should be mastered before progressing to the next unit”[8]. This does not, naturally, mean that he should allow pupils to carry on learning without evaluating their progress. But, after the evaluation he is forced to carry on immediately with the next step, rather like traditional written examinations[9].

In many developing countries, the rate of absence of pupils is high, primarily as a result of sickness, agricultural work and bad weather; inevitably pupils who have been absent drop behind and represent a real case of conscience for a teacher hemmed in by a tight schedule: either he proceeds according to the time-table so that the school is worthy of its name, or he deviates from it to focus on pupils who have missed a lot. And how can a teacher confronted by this dilemma be evaluated?

Before you lay down the learning contents, you should then re-examine the temporal frame that you have drawn up; remember that the less time available, the more the teacher is likely to be straight-jacketed by the materials you are going to produce, and act accordingly.

Attitudes of Groups Concerned

When determining the content matter for your textbook you should also take into account the attitudes of the education authorities, teachers and parents. It is not always easy to identify these; in our experience parents and even education authorities are often only able to express their wishes once they have the book in their hands. Nevertheless, if you intend to cut the volume of subject matter covered you can expect the following sorts of reactions:

Education Authorities

- A systematic refusal to accept any significant change to the volume of subject matter

- Spontaneous rejection of “bargain basement education” as compared to neighbouring countries and especially as compared to the curricula of the former colonial master

- Fear of incurring the wrath of parents.

Teachers

- Vague fear of innovation which will inevitably mean curricular change
- Fear of having to deal with angry parents

Parents

- Categorical refusal to accept mass education for their own children.

Curricula in Other Countries

To allow you to have all the information at your fingertips before you make a decision it might be a good idea to compare the content matter you plan to incorporate in your textbook with that found in foreign curricula in both developing countries and industrialised states.

Analysing these documents, looking in particular at the time-frame reserved for teaching and learning, you will often help you become more aware of your own position. Thus, if you are faced with the criticism that you are proposing “bargain basement education”, as you may be if you suggest cutting the volume of knowledge to be acquired, a reference to experience in other countries can help confirm that your decision is correct and help you argue your case in front of hesitant and poorly informed education authorities.

If you consider it vital to reduce the volume of material, you should proceed with caution, and agree to a compromise if necessary. Let us take an example: in grade one at primary school, the figure 100 is often considered a symbol of mathematical knowledge, held dear by teachers and parents alike. If this is the case, and you have limited the subject matter to be covered such that children are expected only to be able to count to 20, you can summarily present the figure 100 at the end of the year. A compromise of this sort may be enough to break down serious resistance to your textbook, resistance which will not always be technical in nature.

4. Fine Tuning

The relevance of a textbook production project should have been verified twice already, once by the feasibility study and once during your field research work.

If you wish to be absolutely certain that it is worthwhile continuing your work, check again at this stage that it is relevant. Some of you will consider this unrealistic in view of the advanced state of the work, but they should bear in mind that it is not necessarily the people who make the textbook who have performed the preliminary research, and they may still not have all the information they need. They should, however, have enough information to allow them to decide whether or not the decision taken by others to produce a textbook is genuinely justified.

If you are in this position, refer to the results of the preliminary investigation and re-examine the following options.

Adoption of an Existing Textbook

Check once more whether there is not already a textbook in your country or another country which has the features you have stipulated, i.e. which covers the relevant volume of material and adopts the methodological approach you have selected.

The production of new didactic material is always so expensive for a country, that you cannot justify starting work until you are absolutely certain that it is indispensable.

Adaptation or Translation

You should also check whether there are not already books which could be adapted or translated. If the negotiation of reproduction or translation rights is not a major problem, this can be a satisfactory compromise, especially if the conditions for writing and producing new material are less than ideal.

If you conclude, having explored these options, that the production of new didactic material really is indispensable, you should pursue your work, laying down attainment targets in line with the volume of knowledge to be acquired, which you have already defined.

> **Take your inspiration from curricula in other countries, but don't simply adopt these lock, stock and barrel**

5. Attainment Targets

During this phase of your work you will draw up the attainment targets for your new material, which will correspond to the contents you have already specified in functional terms.

You may encounter one of two situations here. Either you decide only to clarify and supplement the objectives laid down in the official curricula, without moving far from these, or you will see yourself forced to define objectives that are quite new in full or in part.

> **Lay down clear attainment targets to allow you to define the contents of your textbook**

In either case you should consider that you will be touching on an area where you are probably not experts; if you can, you should thus call on the services of a specialist or at least consult the relevant literature, such as the books listed at the end of this chapter.

For our part we will merely illustrate, in Table 18, the difficulties that can arise when objectives are not properly formulated, and why it is important to remedy these.

6. Set of Materials

You have now defined the content matter that is relevant for you and formulated it as targets. It is time for you to move on to identify the nature of the materials and the number of these materials you are going to produce.

Decide on the composition of the set after careful consideration

You may find this superfluous, since you think you know the answer and will thus be tempted to start work immediately. Beware - the most obvious solution is not always the best one and the choice of the type of materials is always complex and has many consequences. If, for instance, you are attempting to produce reading and writing material for the first grade of the primary cycle, you should not necessarily produce a reading and writing book and a teachers' guide. It may be more appropriate to produce a writing exercise book or complementary pedagogical tools such as letter cards, word cards or pictures.

<table>
<tr><td>18. Vague and Incomplete Attainment Targets</td></tr>
<tr><td>In 1987, the authors of the Tef'Boky Project, who were responsible for devising didactic materials for learning to write in grade one of primary school analysed the existing curriculum, which made a distinction between handwriting and written expression. The target for handwriting in the first year was defined as “Knowledge of lower case letters”, which was then further explained as:
“Knowledge of cursive lower case characters:
• Vowels, consonants, figures
• Letters and figures of different sizes”.
During the analysis these directions proved to be so vague that it was not necessary to contravene them, but too imprecise to be translated into didactic materials without the authors making additional decisions. The main questions facing the authors were as follows.</td></tr>
<tr><td>The term “knowledge”</td></tr>
<tr><td>Firstly what exactly is to be achieved? Must pupils be able to form the characters as perfectly as the model? Or is it enough if their writing can be deciphered? What are the conditions needed to achieve this? Have pupils achieved the objective if they write without an example or need they only be able to copy an example they are given? If the latter is the case, is the model also in joined-up writing, or must the pupil be able to translate a printed model into cursive style?</td></tr>
<tr><td>The term “letters”</td></tr>
<tr><td>What exactly is to be achieved? Do we mean initially the 21 letters of the Malagasy alphabet or also the 13 complex graphemes in the language? Are pupils expected to write individual letters, or put them together to form words and sentences? A fundamental point, because the difficulty of joined-up writing is putting the letter together to make a word. In the latter case will pupils have achieved the target if they forget elements or add extra elements, i.e. if they make a spelling error? Or must they write without error? And so on.</td></tr>
<tr><td>To allow them to devise their material, the authors thus added the following details to the original targets:
“By the end of grade one the pupils can copy simple, short sentences in Malagasy in joined-up letters on the basis of a model in either joined-up or printed characters; the sentences should be written in lower case characters only and involve only the letters of the alphabet. The pupils should write legibly without errors” (Garabola teachers' guide, 1988, p. 4)</td></tr>
</table>

Analyse the situation before deciding which materials would be most suitable. We suggest that you look in particular at the following aspects.

Pedagogical and Didactic Aspects

You should first identify the materials that would be desirable to ensure high quality learning and teaching. The preliminary research should have given you precise information as to the level of training and experience of teachers, which will allow you to identify the tools that teachers will need to teach the subject in question as well as possible. This research should also enable you to pinpoint the materials that pupils need to raise the level of attainment significantly, given the conditions that you yourself observed in the field.

Financial Aspects

Refer again to the results of your preliminary research, paying particular attention to the following points:

- the number of textbooks which each pupil in the class must purchase and the price of these books;
- the amount that parents are able and willing to pay for their children's school materials;
- the way individual school materials are bought or lent at present, or which are likely to be accepted;
- the way the teachers' materials are acquired;
- the way any large-scale reprints of the new materials will be funded.

You may reconsider your initial decisions in the light of these facts. You may, for instance decide to do without any expendable material, and to dispense with tools except the textbook and the teachers' guide.

We should point out that a textbook is, of course, still the best way to learn to read, but it is not imperative in other subjects. If you are producing materials for mathematics, for instance or, better still, science, you should explore the possibility of producing only a detailed teachers' guide, at least for the first two years of the primary cycle.

A teachers' guide is not, anyway necessarily a dull tome as many first-time authors seem to think; to convince you that it can be interesting look at the two examples below of teachers' guides for mathematics and science. They are designed for primary level, and were produced within the scope of the German-Peruvian Bilingual Education Project and the German-Malagasy Tef'Boky Project respectively.

In some subjects a teachers' guide is more important than pupils' material
Interchangeable, individual material is always a luxury

Practical Aspects

Before you decide on the composition of your set of materials, look at the working conditions in schools as you observed them during your preliminary research. Even if it were possible to finance everything planned, it must be possible to use the material and store it in the schools. You should then consider the average number of pupils working at one table, the storage facilities and the existence of a desk where the teacher can open his guide, consulting it at his leisure during the lesson.

In our experience, the lack of storage facilities in the schools is a serious constraint to the production of pedagogical tools which would be very useful. If we take word cards, for instance, they should certainly not be produced as an integral part of learning to read if schools have no cupboard or safe, for they are almost bound to vanish rapidly.

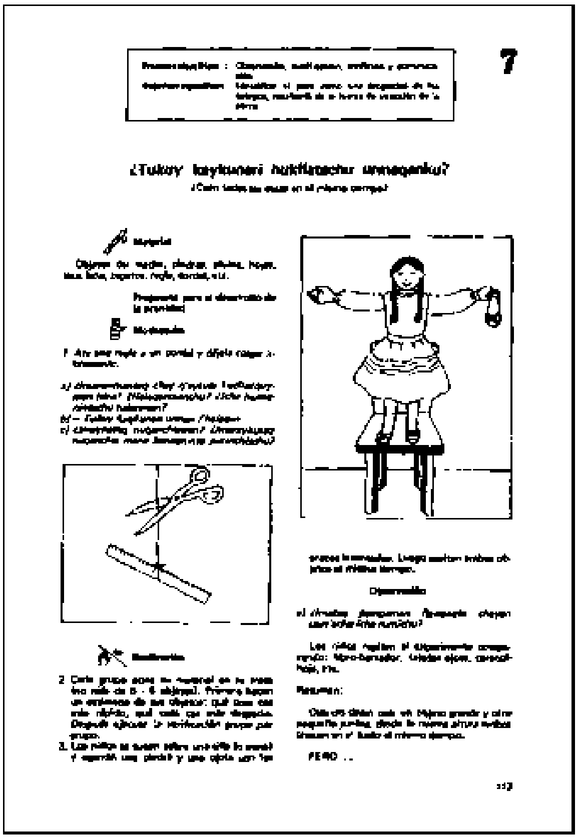

Kawsayninchis Fifth-Grade Science Lima-Puno, 1987

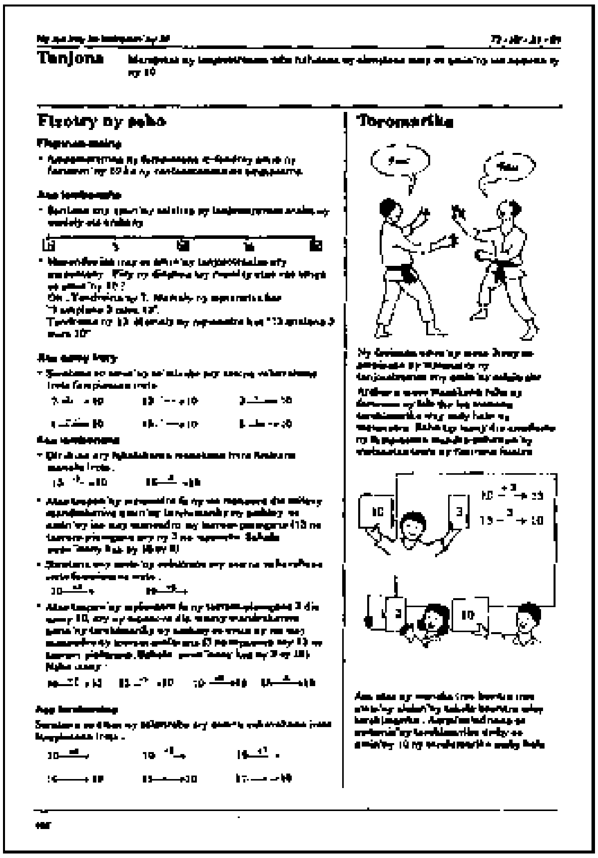

Kajy Mampisaina First-Grade Mathematics Antananarivo, 1993

Logistical Aspects

Even if you are preparing a limited number of pilot copies in the first instance, you should bear in mind the logistics of any subsequent large-scale distribution.

You should thus avoid materials that are difficult to pack, heavy or fragile. If you intend to produce expendable materials you must ascertain that they can be distributed to the schools in good time every year.

Ideally, the field work will have given you some indication as to the sort of material that is needed; in practice, however, this data may not be sufficient. You cannot foresee all the repercussions of the new material from the outset; mistakes can be made in spite of all the precautions taken by authors and they are always serious at this level. This is what happened in the Tef'Boky Project with a writing exercise book, written for beginners, which proved counter-productive. The failure of this exercise book seems to us to provide such a good example of what can go wrong that we have looked at the history of the book in detail in Table 19.

7. Arranging the Subject Matter

Now that you have defined the content material to be covered in the subject and the grade in question, and have decided on the set of materials to be produced, you must determine how you wish to arrange the subject matter within the materials you plan to produce.

19. Conceptual Error
The research work performed in the field by the future textbook authors of the Tef'Boky group revealed that the level achieved in writing in the first grade of primary school was particularly low. The group then proceeded as follows to systematically identify the reasons for this low level, with a view to designing materials which would be best suited to remedy this serious problem.
1. In the Official Curricula
1.1. Writing is considered to be of secondary importance
1.2. Writing, classed as an artistic discipline, is seen merely as a manual skill, unrelated to speaking and listening or to reading
1.3. Attainment targets are vague
2. Physical Conditions
2.1. There is a lack of furniture (benches and tables).
2.2. There is a lack of working materials (slates, exercise books, pencils).
2.3. There is a lack of visual aids (pictures, exercise books, books) which would help pupils to memorise letters.
2.4. The blackboards, the only visual aids, are of poor quality.
2.5. The large classes preclude teachers checking the progress of individuals.
3. Teacher's Activities
3.1. Teachers are poorly trained; they do not know how to provide perfect models on the blackboard; they have not learned to introduce the writing of characters systematically; they do not put a stop to bad habits in time.
3.2. They have no time to prepare their lessons.
3.3. They have no reference books.
3.4. They do not know how to make the best use of the few documents that do exist.
4. Pupils' Work
4.1. Pupils have not systematically practised finer motor coordination (no official preschool education).
4.2. They see writing as only a senseless and boring copying exercise.
5. Role of Parents
5.1. The parents have never been told how important writing is, and thus do not worry about providing enough indispensable expendables such as, exercise books and pencils.

The best way of tackling so many problems appeared to be individual material for each pupil, with the following features:
A personal exercise book (cf. section 2.2.)
Involving fine motor coordination exercises (cf. section 4.1.)
Allowing pupils to learn to write systematically (cf. section 3.1.)
With writing models (cf. sections 2.3, 2.4., 3.1)
With various types of exercises, to reinforce reading lessons (cf. section 1.2)
With reminders and practical advice for the teacher (cf. sections 3.2, 3.3., 3.4)
Designed like a game (cf. section 4.2)
No more expensive than common exercise books (cf. section 5.1.)
Since the analysis indicated that parents were used to buying at least one writing exercise book and one pencil per year, the authors did not expect any negative reactions on their part. And indeed the exercise book was well received by everyone.
Yet, when the level of attainment was evaluated at the end of the year, the exercise book appeared to have had a counter-productive influence on handwriting: to the surprise of everyone concerned, the level achieved by pupils in the sample was lower than that achieved in the control group, who had learned to write without any special materials! Interviews with the teachers and the analysis of the writing exercise books revealed the following:
The exercise book was an innovation in a context where printed materials are rare; teachers, parents and thus the pupils were reluctant to use such a pretty book as a learning tool. It was thus not used for the exercises, which might “sully” it, but only to verify what had been learned; it was only used when the pupils were sure that they could write well, but at the same time less time was spent practising on slates or in normal exercise books.
The teachers concentrated so fully on the exercise book that they forgot to introduce writing systematically and to monitor pupils' progress. They saw the book as a sort of “monitor” which allowed them to turn their attention to other sections while the first grade were learning to write. Thus pupils' progress was monitored only sporadically, and few notes were made, if any, as can be seen from the exercise books. During the revision phase the exercise book was thus abandoned. The new set of materials is made up of an individual slate, purchased with the help of a World Bank loan, a revised textbook comprising texts for reading and models and exercises for pupils to write, copy and solve on the same slate, and, of course, a teachers' guide.
This new set of materials was fairly well received, but in 1992, some parents who had followed their children learning to read with the help of the exercise book, continued to complain about its withdrawal...

The first step is of course to identify the contents of each component part of the set: if you have decided to produce a textbook and a teachers' guide what information will you put in each of these?

If all pupils follow the same time-table, you will distinguish primarily between the teaching and learning aspects, but if the materials address pupils following different time-tables, and if the majority of your target group are following a reduced time-table, it may be better to reproduce the supplementary exercises for pupils following the full time-table only in the teachers' guide. You should then proceed as follows.

Reduced Time-Table

You should refer to the plan you have already drawn up for the reduced timetable and note the number and length of lessons dedicated to the sub-topic in question.

Stages of Learning

Refer back to the attainment targets and identify the various stages that are indispensable if the targets are to be achieved. Thus, if first-grade pupils with no pre-school experience are learning to write, for instance, the major stages involved could be as follows:

- visual distinction and pre-writing exercises

• systematically learning to form the letters of the alphabet
• copying words and sentences
• composing and copying words
• composing and copying sentences.

Contents and Learning Time

Now you must ascertain that the learning targets can be achieved by all pupils. Those following a reduced time-table in particular must be able to systematically go through all the stages identified above as being indispensable.

Divide up the contents and proceed step by step

Supplementary Subject Matter

Finally you should define the content matter of supplementary activities for pupils following the full time-table.

If we assume that you are tackling the sub-topic “speaking and listening”, for instance, and the target for the week is aural recognition of the sound [o], all pupils must be able to recognise this sound. It is not difficult to imagine a few, simple exercises, such as asking all pupils to clap their hands when the teacher uses this sound in a list of words. For pupils who have more time, you could add supplementary exercises, like guessing games involving words starting with **o**. The learning target remains unchanged. The exercises will merely reinforce the knowledge acquired by pupils following a full time-table.

Now you can distinguish between the contents that must appear in the textbook, including writing exercises that are crucial for achieving the target and which thus address all pupils, and the supplementary exercises which can easily be placed in the teachers' guide along with the teaching directions.

An oversight when you decide on the composition of your set can be counter-productive

There is no universal formula for organising the contents of a guide

8. Contents of the Textbook

Having worked out the rough break-down of subject matter to be covered by each item of the set, you can go on to the next phase, which aims to organise the contents of the textbook.

This is a complex task, and the teams of authors which we have been able to observe have adopted various procedures. Some organise the contents little by little, feeling their way forward, rather like a jigsaw, while others make do with very rough plans, some of which can be very vague, which they firm up afterwards. Others again lay down in detail at the outset exactly how they plan to organise the content matter.

We do not believe that there is one correct way of organising the content matter, but we will take the liberty of outlining our own experience, in the hope that this will help you to adopt a more systematic approach.

First Break-Down of Contents

Whatever the subject and the grade in question, you should undertake a first rough break-down of the content matter, stipulating the relation between the time unit and the work unit. You may take a week, or a fortnight or a month as your time unit, while the work unit may be a letter, if the subject in question is reading, or a series of numbers in maths. This will give you the skeleton of the textbook as it were.

To illustrate this, the time unit adopted for *Garabola* was a week and the work unit a letter, as you can see from the illustration opposite.

Define the relation between time unit and learning unit

Order of Presentation of Contents

You now have the bare bones of your textbook. This overview is essential, but not in itself enough. Now you must organise the content matter to be learned, as defined by your group. Let us take the example of a reading book, again. If you have decided on the relation of time unit to work unit, you can decide in which order you wish to introduce the letters.

Depending on the material in question, you could select one of three approaches.

A First Reading and Writing Book

The first step is to determine how you intend to present the elements to be learned within the scope of reading lessons, in view of the fact that this will, in part, also determine the sequence for the writing lessons which will run parallel to reading.

The organisation of a first reading book always poses very specific problems. And again, there is no universal formula applicable in every situation and to every language.

Nevertheless we think that it is interesting to consider the approach taken by the Tef'Boky Project faced with the task of organising the schedule for learning the 21 letters of the Malagasy alphabet and the 13 complex graphemes in the language; this experience is illustrated in Table 20.

Fitsinjaram-potoana ao anatin'ny taona

Volana	Herinandro	Fotoam-pialan-tsasatra (F. p. t.) na hafa	N°/nandro lasana	Lesona
Oktobra	1	F4	★	★
	2	•	1	Fiomanana ho a/.sekoly
	3	•	2	Fiomanana ho a/.sekoly
	4	•	3	Fiomanana ho a/ sekoly
Novembra	1	•	4	o (vak.= tak. 8-9]
	2	•	5	i (vak.= tak. 10-11)
	3	•	6	a (vak.= tak. 12-13)
	4	•	7	n (vak.= tak. 14-15 ; sor.= tak.16-17]
Desambra	1	•	8	l (vak.= tak. 18-19 ; sor.= tak. 20-21)
	2	•	9	m (vak.= tak. 22-23 ; sor.= tak. 24-25)
	3	F. p. t. Noely	★	★
	4	F. p. t. Noely	★	★
Janoary	1	F. p. t. Noely	★	★
	2	F4	★	★
	3	•	10	v (vak.= tak. 26-27 ; sor.= tak. 28-29)
	4	•	11	y (vak.= tak. 30-31 ; sor.= tak. 32-33)
Febroary	1	•	12	e (vak.= tak. 34-35 ; sor.= tak. 36-37]
	2	•	13	r (vak.= tak. 38-39 ; sor.= tak. 40-41)
	3	•	14	l (vak.= tak. 42-43 ; sor.= tak. 44-45)
	4	•	15	s (vak.= tak. 46-47 ; sor.= tak. 48-49)
Martsa	1	Andron'ny Sekoly	★	★
	2	•	16	h (vak.= tak. 50-51 ; sor.= tak. 52-53)
	3	•	17	g (vak.= tak. 54-55 ; sor.= tak. 56-57)
	4	F. p. t. Paska	★	★
Aprily	1	F. p. t. Paska	★	★
	2	F4	★	★
	3	•	18	d (vak.= tak. 58-59 ; sor.= tak. 60-61)
	4	•	19	j (vak.= tak. 62-63 ; sor.= tak. 64-65)
May	1	•	20	b (vak.= tak. 66-67 ; sor.= tak. 68-69)
	2	•	21	k (vak.= tak. 70-71 ; sor.= tak. 72-73)
	3	•	22	p (vak.= tak. 74-75 ; sor.= tak. 76-77)
	4	•	23	z (vak.= tak. 78-79 ; sor.= tak. 80-81)
Jona	1	•	24	f (vak.= tak. 82-83 ; sor.= tak. 84-85)
	2	Fanadinana	★	★
	3	Fanadinana	★	★
	4	Fanadinana	★	★

23

Fitting together several sub-topics

Often the subject is subdivided; then you not only have to organise the sequence of learning one sub-topic, you must also ensure that the various sub-topics interlock as well as possible.

In first-grade maths, for instance, where priority is accorded to arithmetic, although geometrical concepts and measurement are also introduced, the subtopics cannot necessarily interlock on a repetitive basis, as is the case with reading and writing, described above. Indeed you must check in each instance which level of arithmetic is needed to progress in the other sub-topics.

The permanent interaction between the various sub-topics will, in this case, determine the structure of the textbook little by little, like a jigsaw. The best way to work systematically is to return to the pinboard.

Base your arrangement of the subject matter to be learned on the interaction of the many sub-topics covered by your textbook

20. Order of Graphemes in a First Reading Book
Malagasy has 21 simple graphemes and 13 complex graphemes, involving two or three elements. When the authors responsible for preparing learning materials for first-grade reading and writing lessons started work on *Garabola,* they stipulated the order in which the graphemes were to be presented in the textbook taking the following factors into account
Frequency of the grapheme
The authors counted frequency on the basis of three texts of some 1000 words, the first of which was a newspaper article, the second a literary novel and the third a story told by a child. The frequency of punctuation such as apostrophes and hyphens was also counted. It emerged that the vowels, o, i and a had the highest frequency; with few exceptions, such as the “ts” used in negations “tsy” (not), simple consonant graphemes were found more frequently than the complex graphemes.
Complexity of the form of each grapheme
Given the fact that pupils learn to write what they have learned to read, the authors then analysed the complexity of the form of graphemes, and modified the list based on frequency as follows:
• Numbers of elements making up the grapheme • Single element graphemes (n, t, m, etc.) were put ahead of those made up of two elements (tr, dr, nk, etc.) or three elements (ndr, ntr); even ts, in spite of its high frequency, was relegated to a place behind the single element graphemes.
• Shape and complexity of the form of the letters • Letters that are relatively simple to write (l, t, etc.) were given priority over more difficult forms (f, z, etc.)
Aural distinction
Certain phonemes in Malagasy are relatively close to one another, and can cause interference in young children; the graphemes corresponding to these phonemes were presented separately; thus j and z were presented separately, as were tr and ts, etc.
Visual distinction
Letters with vaguely similar forms, were separated from one another by at least one other letter whose form offers enough of a contrast, taking both printed and joined-up forms into account as far as possible. Thus n and m were separated by t, d and b by j and e and l by r.
Finding a common element
Complex graphemes were sometimes tackled together where the authors felt that this would make it easier to learn them and would emphasis any common element; thus mb and mp followed on from one another as did nd and ng, etc.

Writing Exercises

The organisation of the contents of materials for writing becomes extremely complex as soon as the pupils start to study the language, i.e. often as from the third grade. The authors must then define and harmonise at least five sub-topics: handwriting, vocabulary, spelling, grammar and creative writing.

It is important to create a coherent approach within each of these sub-topics, and then ensure that the pupil's progress in each of them is harmonised: it is impossible, for instance to introduce the concept of sentences in grammar if the pupil has not yet learned to write upper case letters. The contents of the exercises will interlock more and more closely as time goes on thanks to the permanent interaction, until an intra and interdisciplinary coherence emerges. If you are in this situation, you can begin to familiarise yourself with the complexity of the subject by consulting the contents page of recently published books. If the book is well written, it should contain an overview of all subject matter presented in the book and the page make-up should make the links clear.

At the end of this phase you can draw up a list of the subject matter you wish to cover, and the order in which the material is to be presented. Be aware though that you may have to modify this provisional arrangement:

- when you begin to organise the subject matter page by page
- when you present the subject matter in the form of exercises, two phases that we will be looking at in the following chapters.

9. Contents of the Teachers' Guide

By the end of the conceptual phase you will have identified the subject matter you will wish to cover in your teachers' guide. Although this book deals more with the production of textbooks, we will spend a moment looking at the guide, given the vital importance of this publication in the hands of teachers who are often poorly trained.

> **Take the vital role of the teacher into account and decide on the contents of the teachers' guide with great care.**

Many of you may ask if it is appropriate to write a sort of “user's manual” which would help the teacher day by day by giving detailed instructions, or if you should aim to write a “training manual” which would allow him to acquire the basic knowledge he needs to teach the subject in question, or again, if you should try to combine the two.

Given the fact that the didactic material you produce will stand or fail on the ability of the teacher to use it, you should attach great importance to the contents of the teachers' guide. We would suggest that you base your decision on an analysis of the needs and possibilities of teachers; to illustrate what we mean we have summed up the approach taken by the Tef'Boky Project to define the contents of the *Garabola* teachers' guide in Table 21.

The main shortcomings of the existing teaching process were identified, enabling the authors of the revised version of the *Garabola* teachers' guide to decide on the subject matter that would best remedy these. The following list was drawn up:

- General information on the language

- Presentation of the subject “Malagasy” and the sub-components reading, writing and speaking and listening

- Detailed information:

  Sufficiently precise information for every lesson throughout the year in each of the three sub-topics, for the two time-tables - a sort of script;

  Brief explanations on how to present an exercise involving a new mechanism;

  Examples for some speaking and listening lessons

- Systematic visual presentation:

  Reading and writing lessons in boxes
  The form of the letter in joined-up writing

- Teacher's texts:

  Texts for reading, to read to the class, to answer an aspect of the speaking and listening target (“The pupil can listen to and understand messages read to him...”)

Short weekly poems

• “Peripheral” information

Articles on the lexical enrichment of other languages;
Articles on the history and creation of the Malagasy alphabet.

• Reminders

Interruptions to recapitulate the progress of work and look forward to the lessons to come;

Regular invitation to refer back to the beginning of the guide to read the general information.

21. Contents of the Garabola Teachers' Guide			
When the authors revised the teachers' guide for teaching Malagasy in the first year of primary school, they defined the contents in a systematic form. Firstly they identified the central problem regarding the use of the guide, basing their work primarily on the data collected during the preliminary research and on the results of testing the pilot version of *Garabola.* Then they looked for the reasons for these problems and the consequences thereof in day-to-day school practice.			
Central Problem			
Teachers do not use the guide as they should			
Reasons 2	Reasons 1	Consequences 1	Consequences 2
1.1. Having read the guide the teachers change nothing in their practical work[10] 1.2. No sanctions on the part of the administration	1. Teachers do not pay enough attention to the guide	1. Teachers are not motivated	1.1. Teachers do not pay enough attention to their classes
2.1. Lack of training and/or willingness	2. They are not able to put the ideas in the guide into practice	2. Teaching remains superficial	2.1. The target is not achieved
3.1. Para-professional activities take priority	3. They only take time to read the guide during lessons	3. Teachers do not manage their classes	3.1. Pupils get bored
4.1. Teachers unaware of their own limitations	4. They believe that they know enough	4. Teachers, self-satisfied, give dogmatic lessons	4.1. Pupils are passive 4.2. Level of attainment is mediocre.
5.1. Shortage of well-written pedagogical documents	5. They do not have the benefit of a literate environment	5. Teachers see their work as a routine	
6.1. Inability to synthesise information and pinpoint the essentials 6.2. The guide lacks the recommendations needed for easy adaptation	6. They do not adapt the instructions properly to the actual classroom situation	6. They have no critical spirit. There is a lack of initiative and creativity	
7.1. Teachers doubtful about applying certain parts of the guide	7. They do not read what upsets them	7. Teachers are not rigorous enough in their lessons.	

8.1. Problems of readability, particularly because of the move from the verbal to the written mother tongue, terminology and communication difficulties	8. They are afraid of not understanding what they find in the guide	8. Too much time is wasted in class	

Garabola

To illustrate the points we have looked at in this chapter here are some typical pages taken from

Garabola, which we have often quoted as an example.

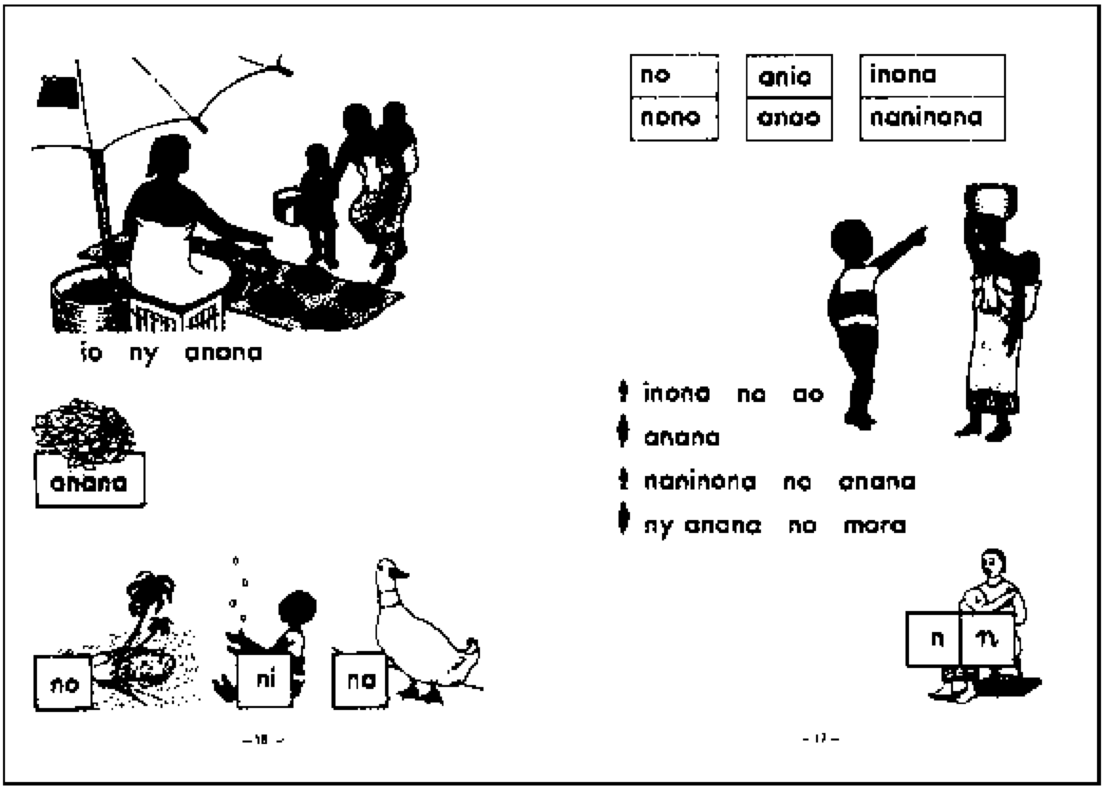

1. Pilot version of the textbook. A typical reading lesson

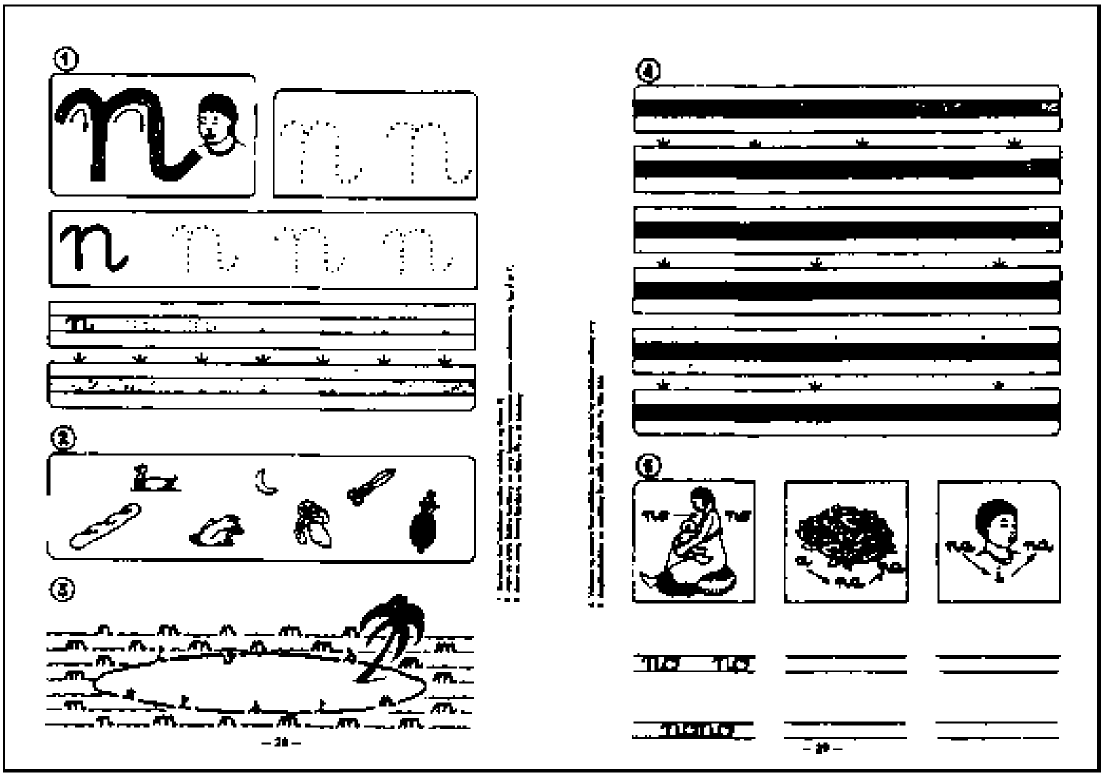

2. Pilot version of the exercise book: Two typical pages of writing.

Revised version of the textbook

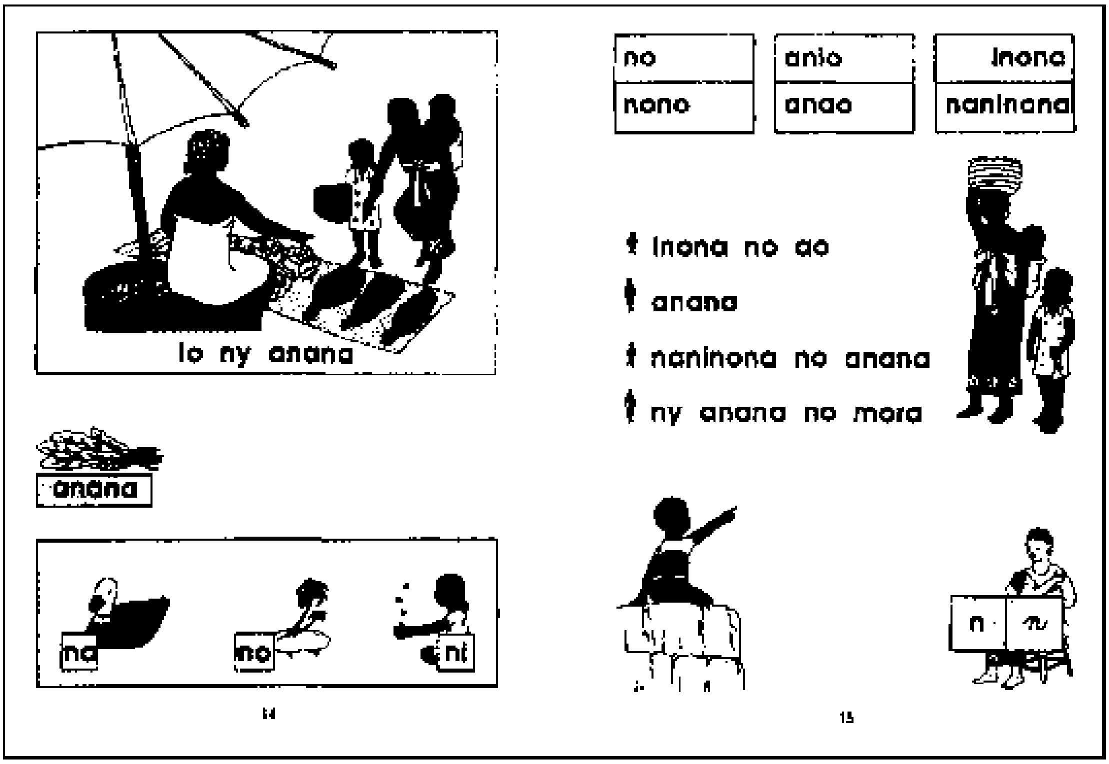

1. Typical reading lesson

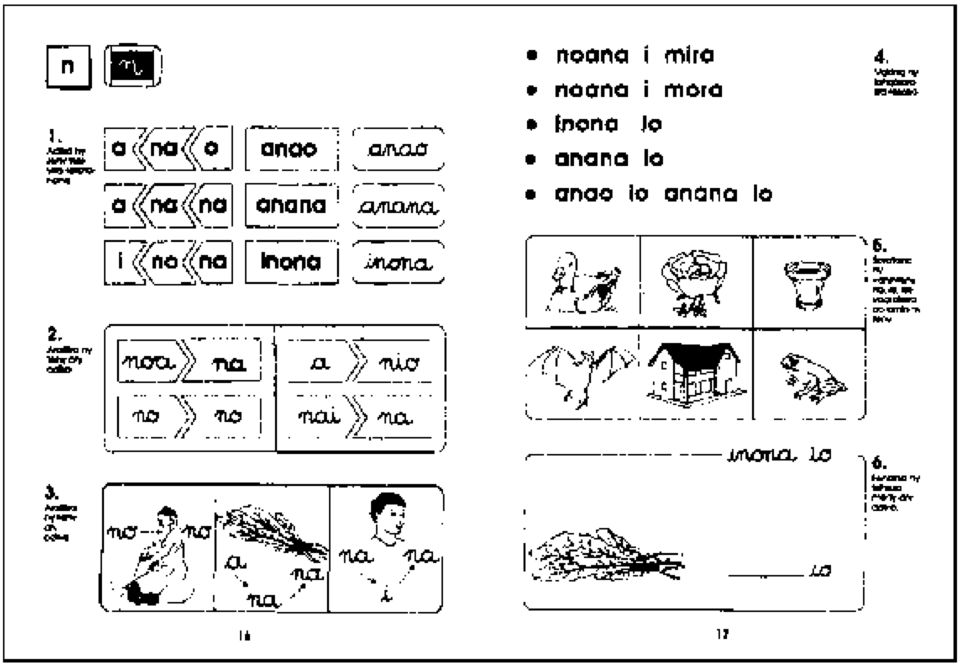

2. Typical writing lesson

Revised Version of the Teachers' Guide

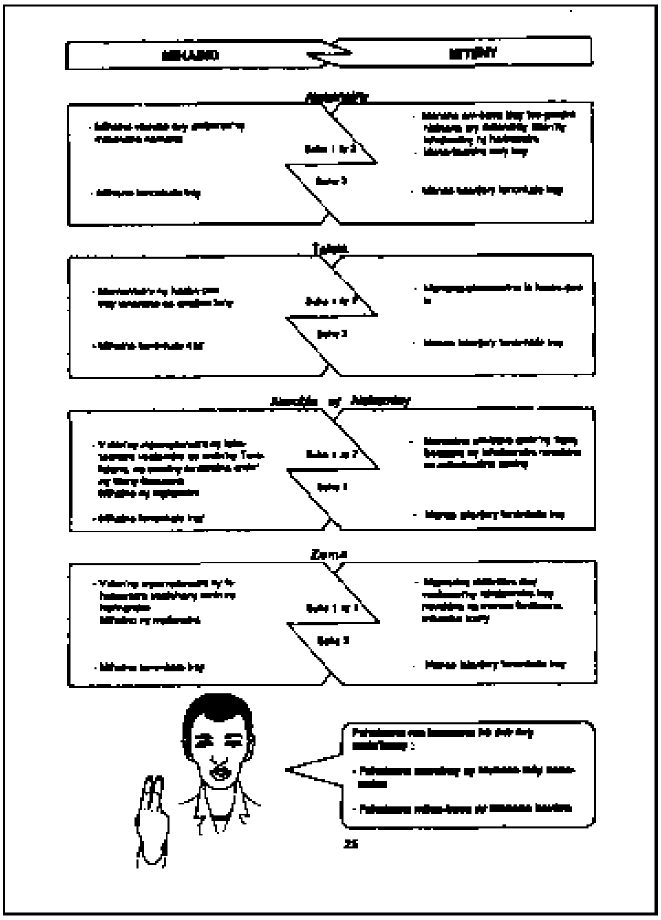

1. Use of graphics - the interlocking of reading

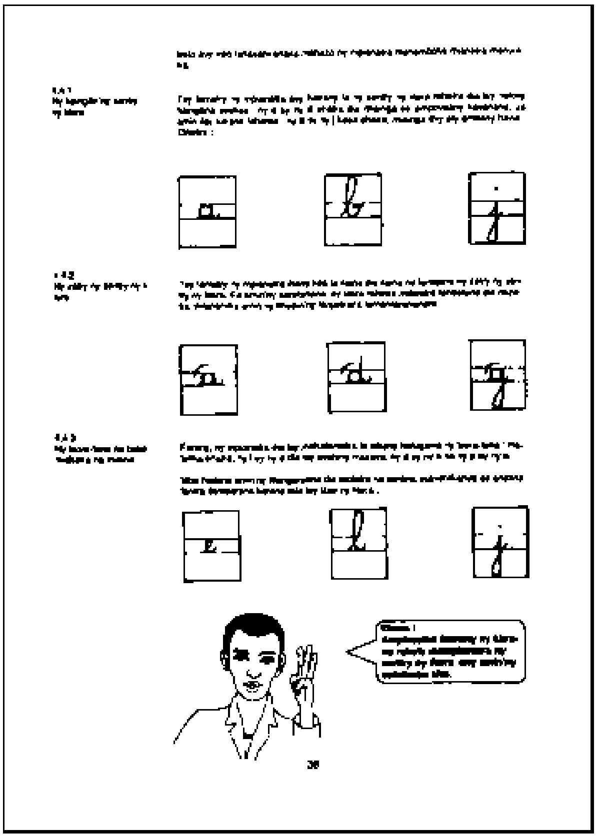

2. Brief refresher - here joined-up writing and writing activities

3. Practical recommendations for each sub-topic in cartoon form

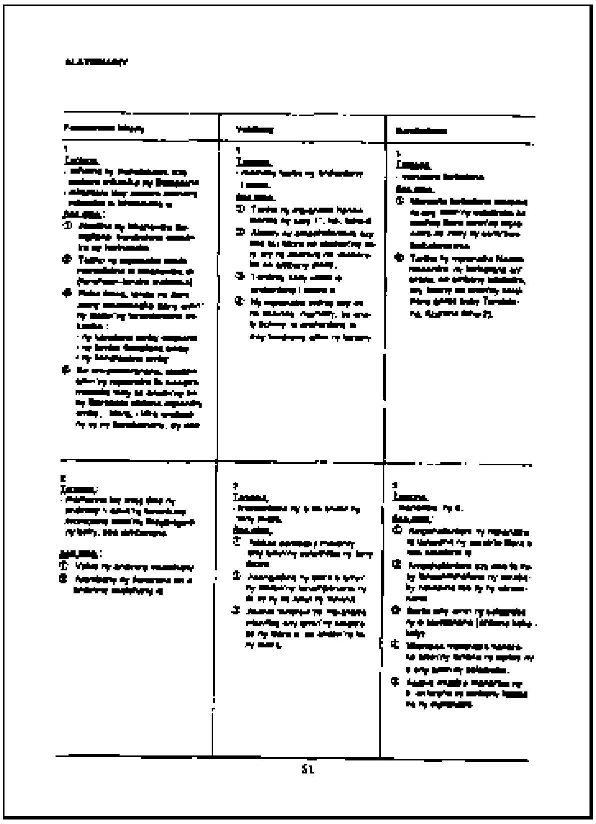

4. Presentation of attainment targets and corresponding activities for each week

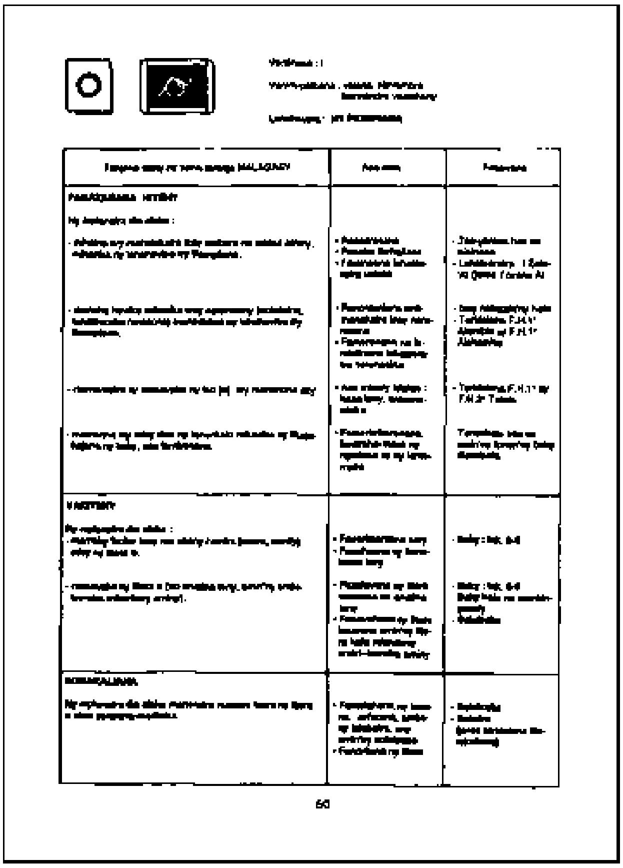

5. Script for speaking and listening, reading and writing activities - one page a day

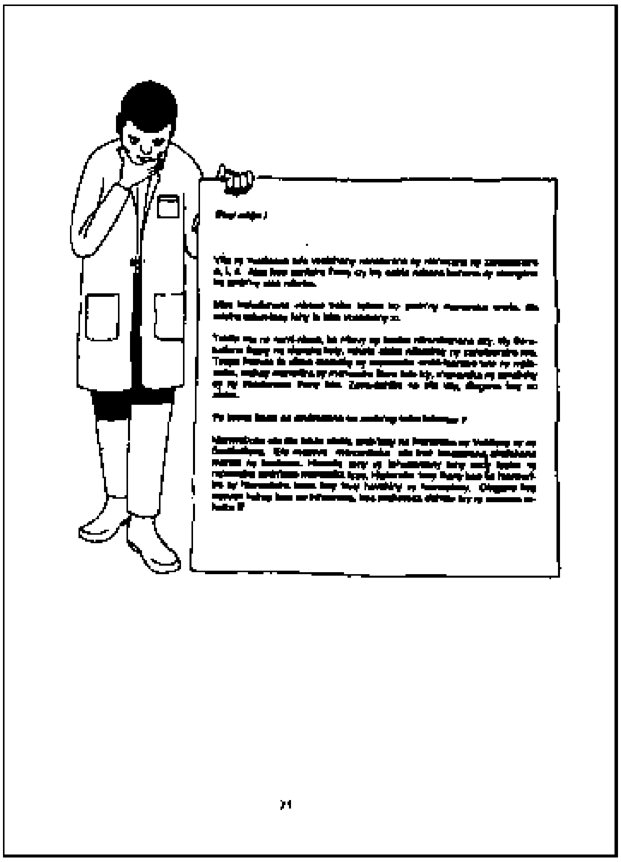

6. Periodic summaries of the work already done and the activities to come

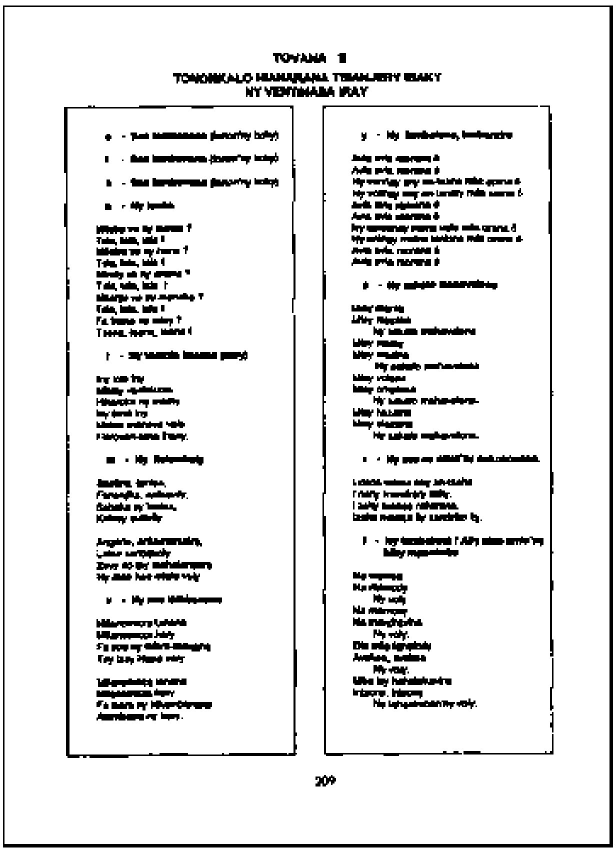

7. Anthology of 24 reading texts and 24 poems

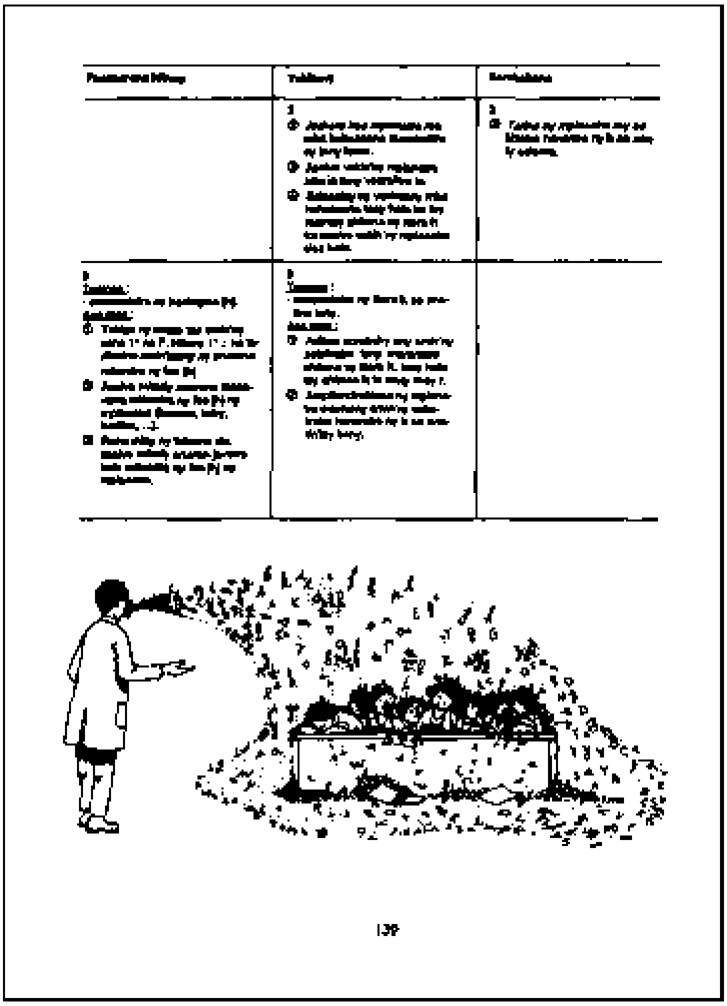

8. Caricatures to retain the attention of the teacher

10. In Conclusion

Where do we go from here?

At the end of this phase you should have two lists of contents, one for the pupil's textbook and one for the teachers' guide.

It would obviously be preferable for you to write these two books in concert. The advice and instructions should at least be devised at the same time as the texts and exercises in the textbook, if not written in a final form.

However desirable this may be, though, it is not always possible. You will appreciate that each publication demands the closest attention of the authors over a period of several months, which generally precludes authors switching from one publication to another. You should not worry, then if you concentrate more and more of your energy on the textbook and end up gradually putting off work on the teachers' guide until later. Make do with noting the important points that you might otherwise forget and continue your work on the textbook - decide how to present the contents that you have now identified. The next chapter is devoted to the presentation work.

Notes

[1] The repercussions of decisions relating to the temporal framework are numerous, e.g. the Tef'Boky Project, noting that the time actually available in schools was significantly lower than the official allocation decided to spread the basic “Mother tongue” course over two years rather than one, thus drastically changing the attainment targets for this subject throughout the primary cycle.

[2] In Madagascar some isolated schools do not even manage to provide the reduced three-hour session and others are open for barely 20 weeks a year. When they devised their didactic materials, the textbook authors of the Tef'Boky Project decided to discount schools that did not operate for a minimum of 24 weeks a year, considering that these establishments were not in a position to provide an education worthy of the name.

[3] In our experience the first version of some textbooks may well encounter major resistance on the part of the education authorities. But if this resistance is not based on well-founded technical or political criteria, and is merely a more or less deep-seated wariness of anything new, the revised version will carve out its own niche.

[4] This table indicates one of the major difficulties that the new materials will have to cope with: the full time-table dedicates twice as much times to reading and writing as the reduced time-table. This represents a major challenge for authors, and becomes more of a problem from year to year, if we take into account the fact that as from the third grade the study of the mother tongue involves grammar, vocabulary, conjugation, spelling and composition, whereas the reduced time-table remains the same.

[5] It is, of course, quite impossible to verify the actual teaching time left, once you have deducted everything which does not involve teaching, such as lines, time taken to hand out books and exercise books, or to wait for silence; although this information would be very useful, it would not have any direct impact on the concept of your material.

[6] Seguin, R. *L'élaboration des manuels scolaires,* op. cit, p. 5.

[7] This is often seen where a new education policy is approved. In Peru, for instance there had always been a department within the ministry responsible for producing the traditional curricula which were based on the assumption that Spanish was the mother tongue of all pupils. When “bicultural and bilingual education” was introduced in 1979 this department asked the German-Peruvian Bilingual Education Project, which has already been referred to several times, to develop curricula to match the didactic material produced in Quechua, Aymara and Spanish as a second language, since the textbook authors were felt to be better able to perform this work.

[8] More precisely, “the mastery theory is based on the finding that the vast majority of pupils in a normal class can master a given target if they are given enough time and the support they need to overcome their difficulties”. In: Landsheere G. *Dictionnaire de l'évaluation et de la recherche en éducation,* op. cit., p. 197.

[9] In the curricula which the authors of the Tef'Boky Project proposed to the education authorities in Madagascar, it was stipulated that 70% of all pupils must achieve the attainment targets.

[10] This is the only problem that cannot be solved by the manual; the solution lies elsewhere - the promise of a career structure, reintroduction of inspectors' visits, etc.

Recommended Reading

Curricula

BABIN, N. AND Pierre, M. *Programmes, Instructions, Conseils pour l'école élémentaire.* Paris: Hachette Ecoles, 1986

BUDE, U. *Culture and environment in primary education. The demands of the curriculum and the practice in schools in sub-saharian Africa,* Bonn: German Foundation for International Development (DSE), 1991

HAMEYER, U. et al (Ed.) *Handbuch der Curriculumforschung,* Weinheim, Basle: Beltz, 1983

MAGER, R.F. *Comment définir des objectifs pédagogiques.* Paris: Bordas, 1977

SEGUIN, R. *Curriculum development and implementation of teaching programmes. Methodological guide.* Paris: UNESCO

Innovation

AREGGER, K. *Innovation in sozialen Systemen. 1. Einführung in die Innovationstheorie der Organisation.* Berne, Stuttgart: Paul Haupt, 1976

AREGGER, K. *Innovation in sozialen Systemen. 2. Ein integriertes Innovationsmodell am Beispiel der Schule.* Berne, Stuttgart: Paul Haupt, 1976

HAVELOCK, R.G. AND HUBERMAN, A.M. *Solving educational problems. The theory and reality of innovation in developing countries.* Paris: UNESCO, 1977

To Sum Up

Once authors are in possession of the main information regarding the production conditions and the circumstances in which their textbook will be used they can start work on the conceptual phase. Their first task must be to lay down the sequence of subject matter to be covered. To achieve this it is important to define each of the following:

- The actual learning time in the grade and subject in question, which is not always the same as the official learning time;

- The targets, in line with the teaching and learning conditions;

- The composition of the set of didactic materials which will allow pupils to achieve these targets, and which must be in line with the needs and possibilities of the target group;

- The break-down of the subject matter to be covered by the various types of material to be produced

Conceptual work is always complex in developing countries.

The official instructions often bear little resemblance to the reality in the schools, and the teams of authors must gauge how much leeway they have before deciding. Finally they must make a distinction between what is desirable (often the tacit wish of parents and the education authorities) and what is suitable for the given situation but often more difficult and almost always less attractive to both the authors and the various target groups. Every aspect of the new textbook must be examined on the basis of a number of criteria, including the material, psychological and social aspects, which it is often difficult to reconcile satisfactorily.

In spite of this complexity, however, or perhaps because of it, you must invest the necessary time and care in this conceptual phase if your textbook is not to be built on sand.

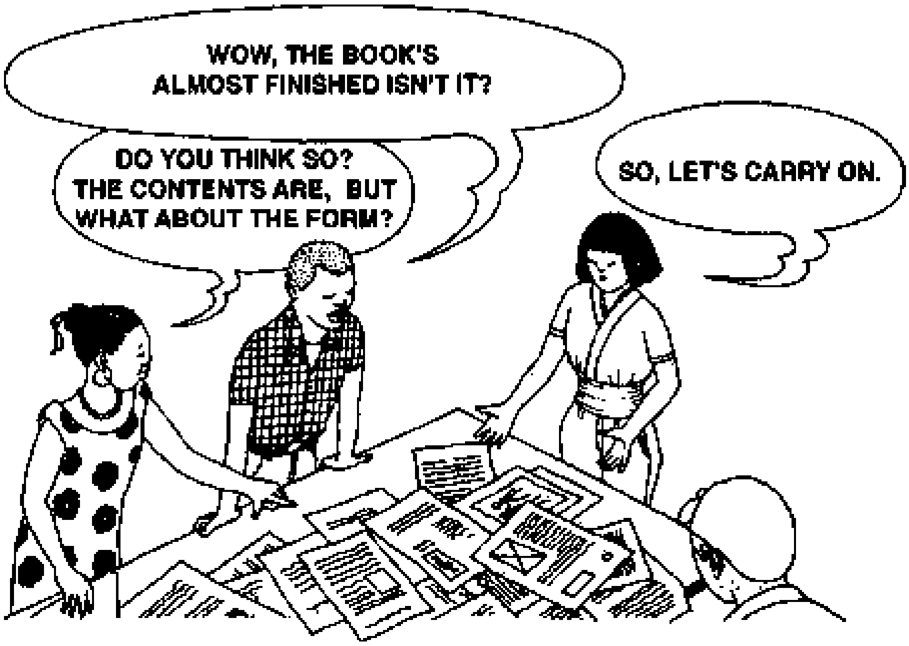
WOW, THE BOOK'S
ALMOST FINISHED ISN'T IT?
DO YOU THINK SO?
THE CONTENTS ARE, BUT
WHAT ABOUT THE FORM?
SO, LET'S CARRY ON.

The Form

The last chapter enabled you to identify the contents of the didactic material to be produced; in this chapter we will look at how to ensure that text and illustrations are of the quality required while staying within your budgetary constraints.

If you are still new to the profession of textbook writing, you may feel that you have spent so long on all the work to date that now it is time to close the conceptual phase. But, if you go on to write your textbook without a proper plan for the form, you will run the risk of writing texts that are too short or too long, producing exercises that are difficult or impossible to present visually, preparing artwork that is far too expensive or producing an unhappy mix of text and illustrations.

To avoid these eventualities, you should thus examine the physical and graphic aspects of your textbook before closing the conceptual chapter. Since the contents and the form are interdependent, you can create them in a two-pronged action, so that the texts and illustrations fit into a pre-established framework without major difficulties.

In large publishing houses, the work described in this chapter does not concern the authors directly[1]; if you are lucky enough to have good publishing back-up, you need only read through this chapter to understand the constraints that the publisher is bound to impose on you. If, however, you have to decide personally on the physical and graphic aspects of your book, you should read this chapter carefully, bear in mind that it is generally errors in the form which reveal the lack of professionalism of authors, and take appropriate precautions.

Contents and form must be devised in tandem

Don't leave the format to chance; analyse all possible consequences of your choice

1. Format

To allow you to visualise the initial arrangement of the contents of your book on the page, we suggest that you first decide on the dimensions of the book.

If you look at textbooks designed for primary level, you will see that the basic form is rectangular[2], but that the dimensions vary: some are scarcely larger than a standard paperback (200 x 130 mm), others are almost A4 size (297 x 210 mm) and most are somewhere between these two extremes (e.g. 240 x 170 mm).

The format of a textbook should never be a coincidence. The main elements that you should take into account to ensure that the dimensions are appropriate for the purpose intended, i.e. that they meet the needs of users and producers alike, are described below.

Pedagogical and Didactic Considerations

First and foremost you should identify the dimensions which guarantee optimum readability, in terms of both the structure and the text. Take the following points into consideration.

Macro-legibility - the structure[3]

The dimensions you choose must make the general structure of the textbook easily comprehensible. Other factors, including typographical aspects and layout considerations naturally play a contributory part, but it is the size of the pages more than any other single factor which will determine the macro-legibility of your book.

The format you choose must firstly reflect the structure of the lessons. If you are producing a first reading book, where it is important to respect certain stages of learning, the page should be big enough for the links to be quite clear. If you have chosen an analytical learning form, the reader should be able to recognise at first glance the progression from the sentence to the word, the syllable, and perhaps the letter.

Equally, the format must reflect the various functions of the text. Let us take an example to illustrate this: let us assume that you plan to print exercises along with brief instructions in your book. The page dimensions must then be such that each block (exercises and instructions) is easily recognisable at first glance.

The two illustrations below reveal how important this aspect is.

> **First priority: the format must be large enough to ensure that the structure is easily recognisable**

Micro-legibility - letters and words

The dimensions of your textbook must also be such that it can be easily and effectively read by users. This readability is governed by several factors, which you must bear in mind at the end when determining the layout of your book. At this stage we will look only at those factors that have a direct bearing on the format, i.e. the size of the characters used.

You should take your lead primarily from the research conducted in industrialised countries over a period of several years now into the readability of printed characters. M.A. Tinker, one of the best known experts in this field, concludes that the characters used in textbooks should be in indirect proportion to the level of education: the further down the educational ladder you go, the larger the characters should be[4]. The dimensions of the textbook must thus allow you to use the size of characters recommended for the grade in question.

This is always important, but it is vital for a first reading book. Since it is not recommended to hyphenate words at this level, and we would advise you not to spread sentences over more than one line in the first lessons, the textbook dimensions must enable you to write a sentence in one line using the size of characters recommended[5]; a paperback format would thus be inappropriate at this level.

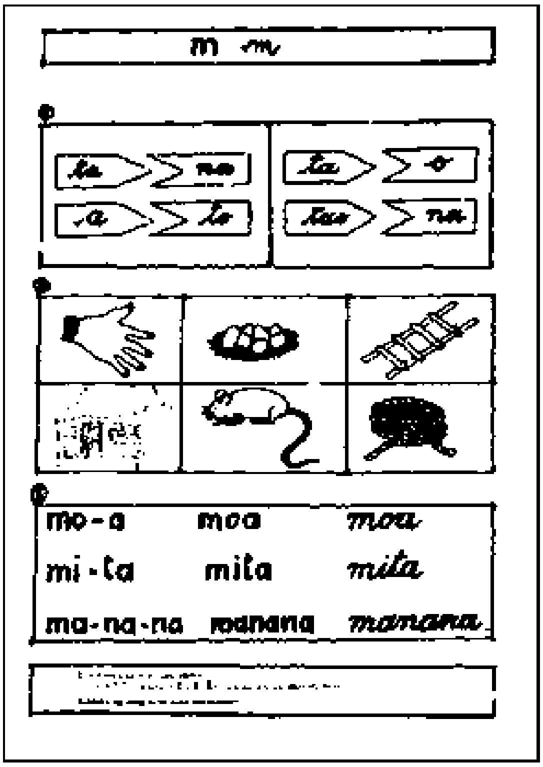

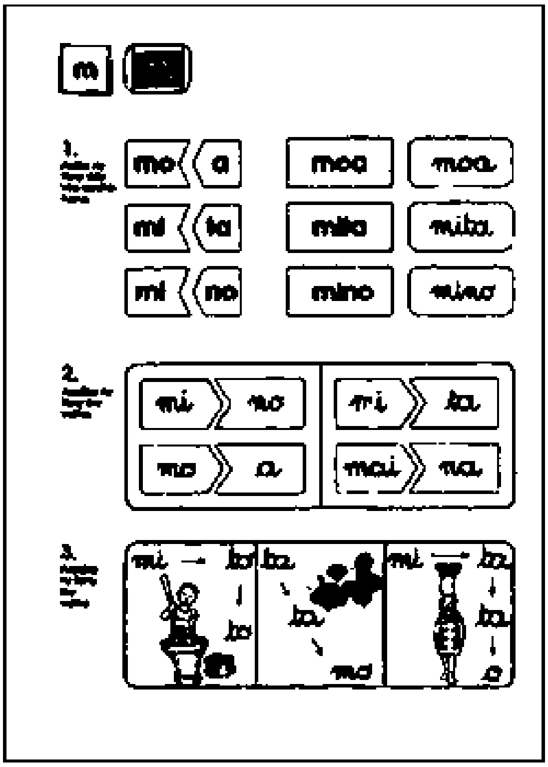

The left hand page shows a draft, the right hand page the final version of Garabola exercises. Look at the two, and see how important it is to arrange the exercises and instructions in a way that makes them easy to understand. Think about the consequences of the two versions: if the instructions are printed at the bottom of the page, the textbook must be long enough to separate them clearly from the exercises; if they are printed on one side of the page, on the other hand, the textbook must be wide enough for the exercises to be printed completely.

Secondly, you should bear in mind the learning conditions observed during field work: if the classrooms are poorly lit, if most pupils have not enjoyed preschool education, and if they have little contact with printed materials, you may have to raise the levels of readability determined for industrialised countries[6], and use a larger format for the first grades at primary level.

Practical Considerations

This is the second important factor which will influence your decision on the appropriate format, and may force you to modify your original decisions. If you have, until this point, given priority to pedagogical and didactic considerations, you probably intend to use a relatively large format; but under the circumstances in which textbooks are normally used in developing countries you may have to scale down your book.

Before deciding, consider the following factors.

Ease of Handling

A book is always made to be visually attractive, as we have seen above, but it must also be easy to handle.

When you select the format, you should think firstly of the pupils of course: they must be able to hold the book closed with one hand without difficulty or open using both hands. You should also think of the teachers. Since some of them will be teaching several classes at once, and since they will almost always have to stand to better direct proceedings, you should choose a format which is small enough for the teacher to hold it in one hand during the reading lesson as they prefer to do.

Test your book for ease of handling by holding it in one hand as shown below.

Large formats meet pedagogical needs best, while smaller formats respond to practical and financial considerations

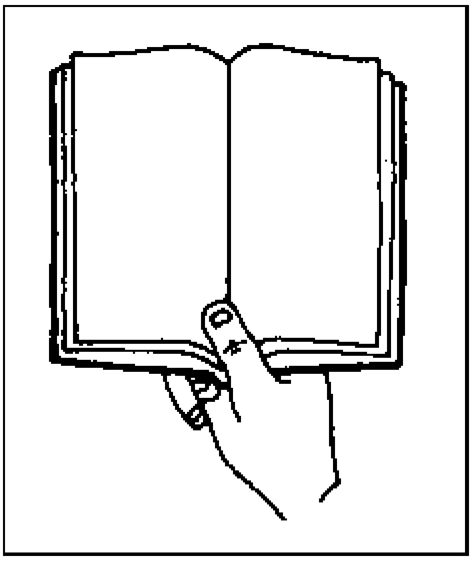

School Furniture

The dimensions must also be appropriate for the school furniture available.

Return to the field study and determine how the schools are equipped in terms of tables and chairs; and more precisely look at the width of tables, the average seating space per class and the general state of repair of pupils' furniture. In some classes an unnecessarily large textbook can be a nuisance for pupils and will be rapidly destroyed.

Utilisation

Finally, when deciding on the dimensions of a textbook you should bear in mind how it is going to be used, by one pupil or several.

If it is to be used by more than one pupil, the book will only be borrowed by pupils and will be kept in the school building. It can then be relatively large, especially if the system involves two or three pupils sharing a book. On the other hand, if parents are expected to buy the book, it will have to be carried back and forward to school in a small canvas or raffia bag; if this is the case you should come down on the side of a small, compact book, which will be easy to carry and won't be destroyed so quickly. Specialists reckon that textbooks for primary level in rural areas should have a maximum format of 220 x 140 mm to ensure a maximum service life[7].

You should pay all the more attention to these considerations since the other factors which will help determine the service life of your textbook (paper used, material used for cover, binding) may not be of top quality.

Economic Considerations

By analysing users' needs you have worked out your first ideas as to the dimensions of your textbook. You should now check whether the desirable is financially feasible. The cost price of a book being closely linked to the price of the paper used[8] you should decide on an appropriate format in terms of the format of the paper and printing materials so as to avoid wastage, which can be very expensive.

We are now entering the technical domain with which authors are not, as a rule, familiar. Given the scope of this publication we will look only at the essentials. We recommend that you consult your printer who should be able to give you the additional information you need, and that you read the works listed at the end of this chapter.

Contact your printer at this stage

Format of Paper to be Used

Paper is manufactured from pulp, which is in turn produced on the basis of certain raw materials (wood, but also plants and textile waste). Paper machines produce large rolls of paper which can then be cut into sheets.

The rolls of paper are sold by weight, whereas sheets are sold in reams (packs of 500). The format of rolls is determined by the width of the strip; reams of paper come in standard sizes[9].

To avoid unnecessary wastage, make sure that the format of your textbook corresponds to the dimensions of the sheets of paper used in printing, folded once or more, as indicated briefly at the start of chapter one.

Avoid paper wastage which will put an unnecessary strain on your budget

You should thus contact your printer to find out whether or not he will have to import paper; if he can, you will have a certain leeway regarding the format, since large paper manufacturers can often produce paper to your specifications provided you order a large enough quantity and provided the order is not urgent. If, on the other hand, he is obliged to use locally-manufactured paper, or if you have been donated paper, as is relatively frequently the case with textbook projects, you should determine the format of the textbook on the basis of the format of the available paper.

What you, as authors, must be aware of is that it is rare for a book to be printed one page at a time; for reasons of economy a maximum number of pages is set for each sheet printed. The forme thus obtained is slotted into the printing press, and the printed sheets are folded and then cut on three sides. You then have a “signature”. The body of the book is made up of several signatures put together.

To print the maximum number of pages at a time on one press you should define the final format of the finished work with great care, on the basis of the paper format. If, for instance the paper available for printing is A1 format (594 x 841 mm), and you decide that your textbook should measure 250 x 190 mm, you can print 16 pages at once, as illustrated below, 8 right hand and 8 left hand pages; the blank edges will make it easy to trim the pages once they have been folded[10].

Format of Printing Presses

The format of your textbook must also correspond to the format of your printer's printing presses. To take the same example as before, if the dimensions of the printing press are 920 x 640 mm you should not select a finished format of 300 x 240 mm for your book; because of a few centimetres too many you would only be able to print eight pages at once rather than 16, the wastage would be high and the cost of the paper would almost double.

The paper wastage may appear to you to be negligible for a pilot run of a few hundred books, but if the prototype is approved for general nation-wide distribution with a run of say 50,000, the additional costs of your lack of foresight will be enormous.

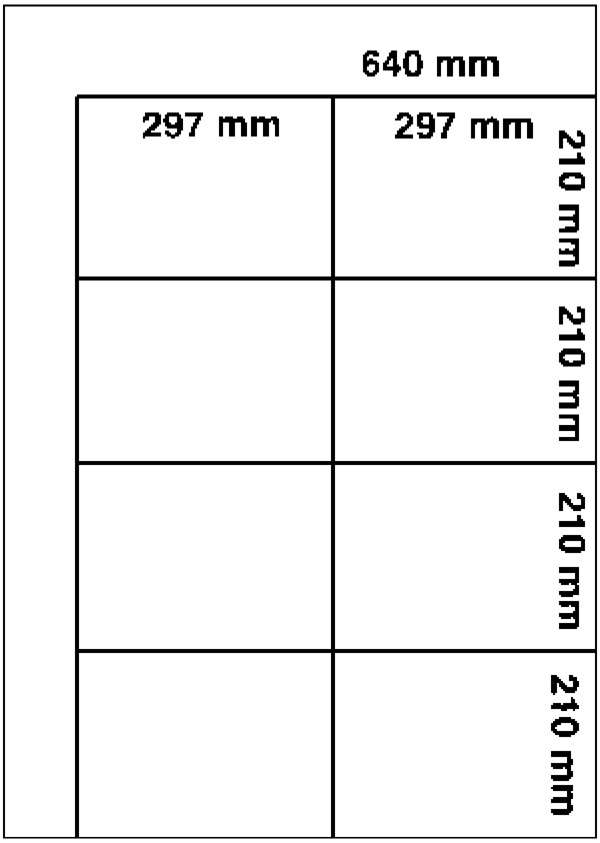

You should, however, be very careful in this field. Although it is vital for you to understand the importance of the relation between the format of a book and of the paper used for printing, you must be aware that the information given here is far from complete. The printer, who has experience in this field, will often know how best to reconcile the financial considerations with the format you want. You should always consult your printer before making a decision which it will be difficult to change at a later date.

Publishing Considerations

Finally, you should not forget that the dimensions you select for your textbook need not necessarily apply only to this one volume.

If you have been asked to produce a series, you should bear in mind that one feature of the set will be the identical format of all textbooks. Reconsider your decision in this light, and see if it is appropriate for the series as a whole.

2. Number of Pages

The number of pages, which is closely linked to the format, and partly determined by it, should also be stipulated at this stage.

For most books, the number of pages can only be identified once the manuscript has been written: a system of counting, called “casting off”, allows us to count the number of characters used and thus to calculate the space needed by the text once it is set. The complex structure of textbooks, however, precludes this approach. Indeed quite the reverse is true: before the authors start to write, the number of pages must be determined, and the text they write will be shaped by the exact number of pages and the relatively precise space allowed for text on each page.

We propose that you examine the following aspects and achieve as great a harmony as possible when deciding on the number of pages.

Pedagogical and Didactic Considerations

The number of pages must first correspond to the material to be covered, and the methodological approach that you have decided on in line with chapter 4. The following are the main aspects to be taken into account in this phase.

Learning Pages

Firstly you should count the number of pages that are to be dedicated to learning; this will give you an idea, and allow you to plan the number of printed signatures that will make up the finished textbook.

To this end you should look again at the draft contents for each learning unit - i.e. the lesson - and identify the number of pages required per unit or lesson. Take into account the format envisaged, and the learning stages or the major parts of each lesson. Then estimate the number of pages needed to present the subject matter in a systematic way - and multiply this figure by the number of units you intend to incorporate in the book.

If, for instance, you have planned 24 units for the year, your results will be as follows:

• For 2-page units	48 pages
• For 3-page units	72 pages
• For 4-page units	96 pages
• For 5-page units	120 pages
• For 6-page units	144 pages.

Some of you will probably wonder how you can go about identifying the space needed to present the contents satisfactorily on a page; if this applies to you, look briefly at section 3 of this chapter, which deals with this question, even if you have to come back to it in more detail later.

At this stage, of course, your results can only be provisional; as you will see, the total number of pages you have just calculated does not correspond to the total number of pages in the book. This exercise is only important to give you a first rough idea of size. Commit it to memory and put it up on the pinboard.

The number of pages in a textbook is decided before the book is written

The number of pages allocated for each lesson must allow for an effective layout of the contents

Macro-legibility of the Book

The number of pages must make for good macro-legibility. If you opt for an even number of pages per unit, the arrangement of the contents should be fairly transparent; the first page of every unit will either be a right-hand page, or a left-hand page.

If you chose an uneven number of pages for your units, you will not get any such clear structure; the first page in a unit will sometimes be a right-hand page and sometimes a left-hand page. If you intend to have units of 3 or 5 pages in length we would urge you to reconsider the wisdom of this before progressing.

To illustrate this point we have printed the arrangement of one unit of the pilot version of *Tongavola,* a reading and writing book for grade-two pupils in Malagasy. The authors saw no other option open to them but to opt for 6-page units; the first five units address all pupils, the last is made up of supplementary exercises for pupils following a full time-table.

Given the heterogeneity of the contents of certain pages, it was vital for the units to have an even number of pages, to give the reader a marker in the form of the first page, which is always on the same side. The figure below shows the first unit of *Tongavola* to illustrate this.

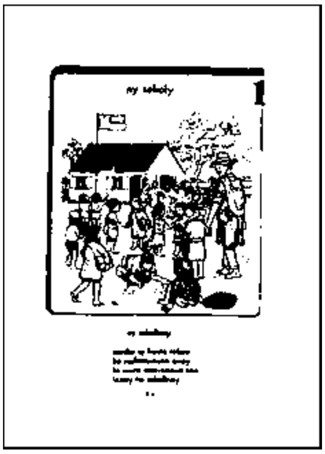

1. Visual introduction to the topic of the week, which is also used for speaking and listening lessons, followed by the poem of the week

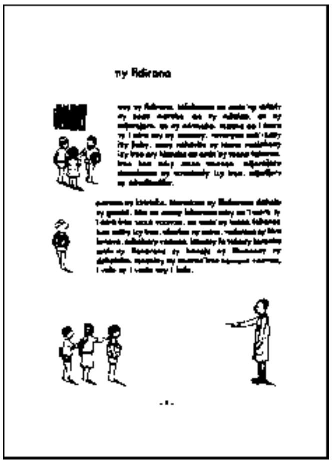

2. First reading text, descriptive in nature

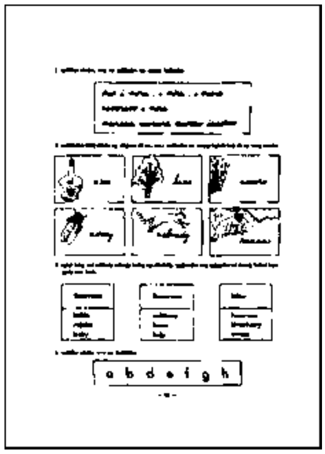

3. Writing practice: handwriting, spelling and vocabulary

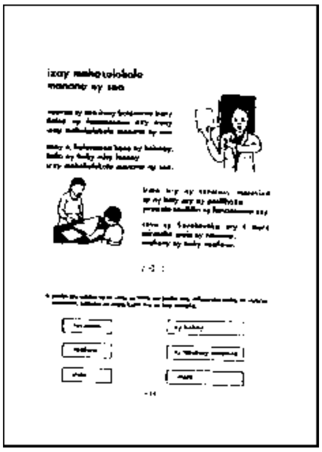

4. Second reading text, procedural in nature, followed by a grammar exercise

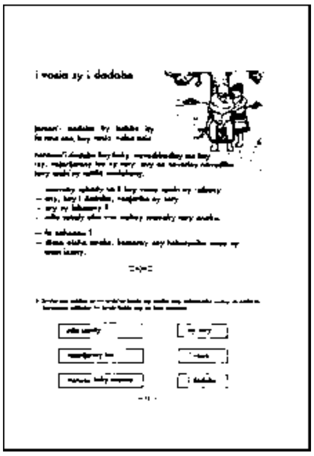

5. Third reading text, narrative in nature, followed by a composition exercise

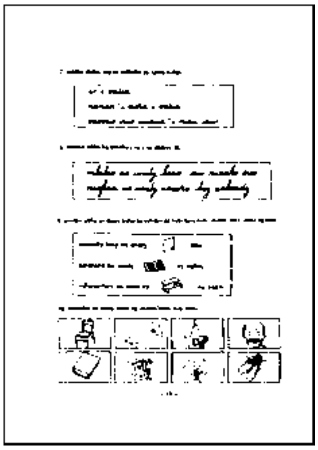

6. Additional text comprehension, spelling, grammar and vocabulary exercises

To ensure that readers can find their way around the book easily, you should opt for an even number of pages for each lesson

Financial Considerations

Beginners are often tempted to incorporate as much of their own knowledge as possible in their first book. Not only do they often overestimate the volume of work which teachers and pupils in developing countries can realistically get through, but they forget to gauge the financial implications of printing non-essential pages.

Paper is always expensive. Calculate for yourself the cost of an extra eight-page signature in a run of 100,000 or more.

So, keep to the number of pages you consider essential for each unit and modify this if necessary to keep costs within acceptable limits.

Technical Considerations

The figure you have calculated is still not the total number of pages of your textbook. It is merely a rough calculation, which you will be able to make more precise when you take the technical factors into account.

To this end you should go back to the format you plan to use, and the format of the sheets of paper to be used for printing, which will allow you to check how many pages can be printed at once. You will see that it is best to choose a multiple of 8 (16, 32, etc.) pages for your book. The difference between the number of pages reserved for learning and the total number printed will depend on what we will term “non-text information”, which we will look at in more detail below.

Let us assume that you consider 96 pages essential to present the subject matter, and you have to choose a multiple of 16 pages. To get a round number, you will have to use an entire signature for non-text information[11].

Bibliographical Conventions

A book does not only contain information in the main body of the text, but also in the form of non-text information, which may be found on the title page, or at the start or end of the book. And in a book destined for true booklovers the first pages must be left blank.

It is acceptable for there to be no blank fly leaf in your book; but you must provide what we have chosen to term non-text information.

In an attempt to explain this briefly and as precisely as possible, we have printed the cover page and the first few pages of the revised version of *Garabola* opposite. Below each page we have descried the information contained on that page and outlined the reasons for including this information.

Publishing Constraints

This is the final point that you must take into account when deciding on the number of pages your book will have.

The books for each class should be at least as thick if not slightly thicker than the preceding volume. You should thus ensure that the grade one book does not take on the dimensions of a small encyclopaedia, which is bound to cause problems later in the series.

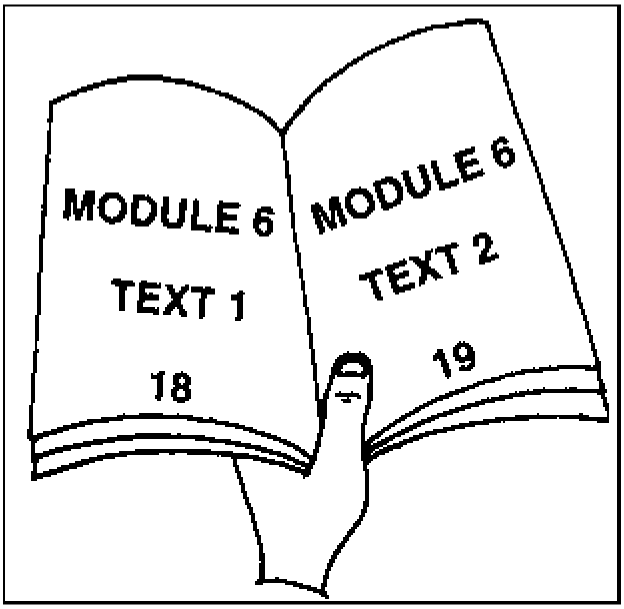

Run one last check at the end of this phase: if a page has remained blank due to an oversight it is easy to correct this oversight either at the start of the book (add a preface, spread the table of contents over two pages rather than one, for instance), or in the body of the text (in a reading book you could add an extra title page before the supplementary texts, for instance). If, however, you have forgotten a page in your calculations, which can happen to even the most experienced authors, it will be difficult to add one at a later stage, and the later you discover your error the more difficult it will be: sometimes you will have to redesign the entire layout with all even pages becoming odd pages, etc.

Front Cover
Contents: Title of book:
Contents (subject and grade): Illustration
Reasons: Practical reasons: The potential purchaser must be attracted by the illustration, informed as to the contents of the book and told whether or not the book is officially approved.

Back Cover
Contents: Announcement regarding the publishing of the textbook for the next grade:
Reminder of contents: Printer's logo
Reasons: Practical reasons: The purchaser must be told whether or not the book is part of a series; Legal and practical reasons; The printer must be specified.

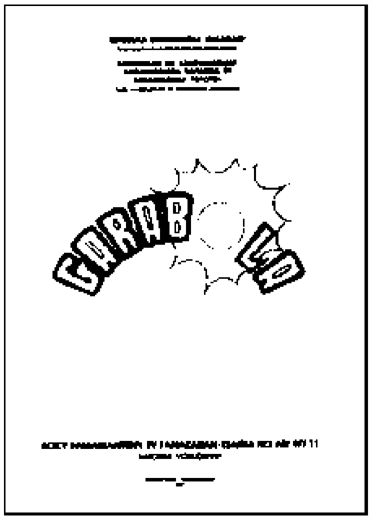

Full-Title Page
Contents: Name of ministry; Name of sponsor; Title of book;
Contents (subject and grade); Version (pilot); Date and place published
Reasons: Institutional reasons;
Practical reasons: Even if the cover is lost the full-title page gives the essential information

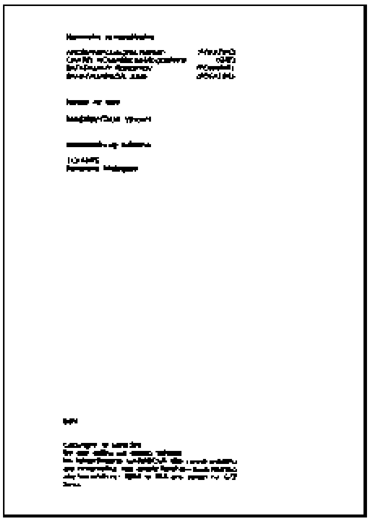

Copyright Page Contents: Authors' names; Illustrator's name; Publishing unit; Copyright Reasons: Legal reasons: Who holds the copyright; Recognition of the moral rights of authors, illustrators and the publishing unit

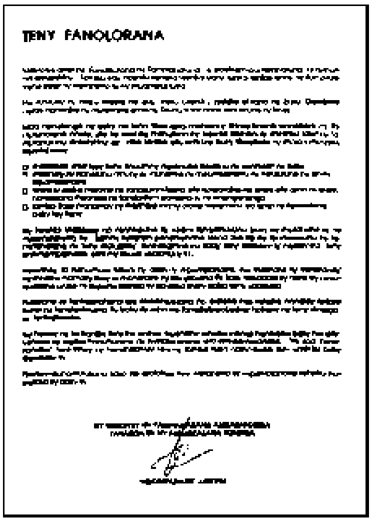

Preface
Contents: General preface signed by the Minister of Education
Reasons: Institutional reasons: official seal of approval for the book and its contents

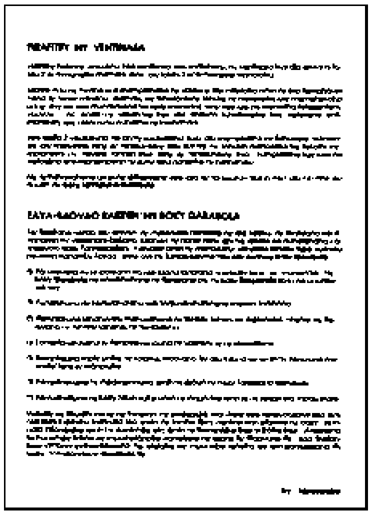

Introduction to the Book Contents: Text by the authors laying out the learning targets of the book and the different stages in its completion, including the evaluation phase
Reasons: Practical reasons; To enable teachers to use the book even without a teachers' guide; To boost the book's credibility with teachers: it has been tested and revised

To avoid this, make a mock-up of your book; write the unit number and the main contents on each page. You need not respect the finished format for your mock-up - a mini model is every bit as good.

Ascertain that you have calculated the number of pages correctly before progressing to the next stage

The cover of a textbook is a very special place; take great care in selecting the information to be printed on it

You should always reserve a few pages at the start of your book for general information

3. Basic Visual Structure

By laying down the format and the number of pages of your textbook you have defined the framework within which you must now insert the contents. The objective of the phase that you are now starting is to design an initial arrangement of the contents on the page, or to be more precise to put together texts and illustrations in an appropriate way on each page.

This is not the final layout. It is a draft, the first translation of your ideas into physical form. This overview will allow you to judge the general rate at which you aim to present the contents. The decisions you will make should be just precise enough to allow you to progress to the writing phase, gearing your work to a framework, which will probably have to be modified, adapted and specified in greater detail later.

We are touching on a field which, in large publishers, would be the task of a professional layout person. When the authors themselves are in charge, they do not always appreciate the importance of this phase, or do not have the training they need. This is why, although we describe how to proceed, we also advise you to seek the advice of a professional and to train yourself systematically to evaluate the graphic aspects of books. Once again do not be discouraged: find out about the subject by examining the layout of other books and by reading specialised books, including those listed at the end of this chapter.

Function of Visual Markers

What is the point of identifying an underlying visual structure? - to make your book a good learning and teaching tool. If it is to be a valuable tool, it is not enough to have appropriate, well-organised contents; the presentation must facilitate the understanding of the content matter, and more precisely, you will need visual markers which will clear up doubts, prevent misunderstandings, visualise the progression and spotlight key information.

To this end you must put together the various elements which make up a page (texts, illustrations and blank space) in a form appropriate to the content matter. You will create the underlying structure, which will be repeated more or less identically in each unit. In this way you will give the book a uniformity and transparency which is vitally important for pupils and teachers who have little contact with the printed word.

Organising a Learning Unit

The basic structure will be determined at unit level, i.e. at the level of the chapter or lesson. You should thus design your unit step by step, using sketches and ideas, comparing these and modifying them one after another.

If we come back to the example of a reading and writing book, you could reflect on the following basic questions:

• Will the learning units or lessons be similar or will they be divided into easily distinguishable blocks with different structures?

• Will you present all the texts and exercises in the main units, or do you plan to distinguish between those that are indispensable for learning, and supplementary texts and exercises which could be put at the back of the book?

• Should the first page of each unit be on the same side of the book? On the right-hand side or the left-hand side?

• Will the reading texts and writing exercises be separated and printed on different pages or will they be printed on the same page?

• Will the reading and writing work be presented on a full double page or will one page of reading always alternate with one page of writing?

• What is the average length of texts for reading and the dimensions of accompanying pictures?

• Will some texts require a special layout?

• How much space approximately will each exercise need?

These considerations should result in a first draft or design of the contents of a unit. You should sketch your design in pencil without paying too much attention to precision or scale.

On the next page you will find the draft produced for four pages of a lesson in the revised version of *Garabola.*

Outline the rough presentation of the contents of each lesson
You should identify the basic structure of your book little by little, scribbling down ideas, feeling your way forward, and changing your plan time and time again

Double Pages

Once you have decided how to arrange your unit, you should examine the resultant structure of the double pages; remember that the reader will always be confronted with a double page when he opens the book, and that your basic structure must build on this.

You may find certain shortcomings and feel that you should modify the arrangement of the unit. Let us assume, for instance that for a four-page unit comprising reading and writing you had decided to alternate one page reading and one page writing. You then discover that every double page throughout the book will follow an identical pattern, giving your book an apparent lack of structure.

One double page of reading followed by a double page of writing like *Garabola,* reproduced at the top of this page will give you greater transparency and dynamism.

The Page

If you are satisfied with the organisation of the double page, it is time to look more closely at the organisation of the individual pages. You must look at the size of all the elements which go to make up a page and make any necessary changes.

By the end of this phase you should have a rough model of the contents of your book, page by page

There are no universal prescriptions for a good page layout, but the following pointers are important. Avoid cramming the page too full and leaving it too empty; if you intend to put together an illustrated text and an exercise on one page, sketch the layout for each, and do not hesitate to revise your decision if you find that you don't have space to present the exercise properly at the bottom of the page. If you have a page of exercises, remember that two exercises on an otherwise empty page may look silly, but that six or more may be too many, making it difficult for the reader to find his place and conveying an impression of a dauntingly packed page.

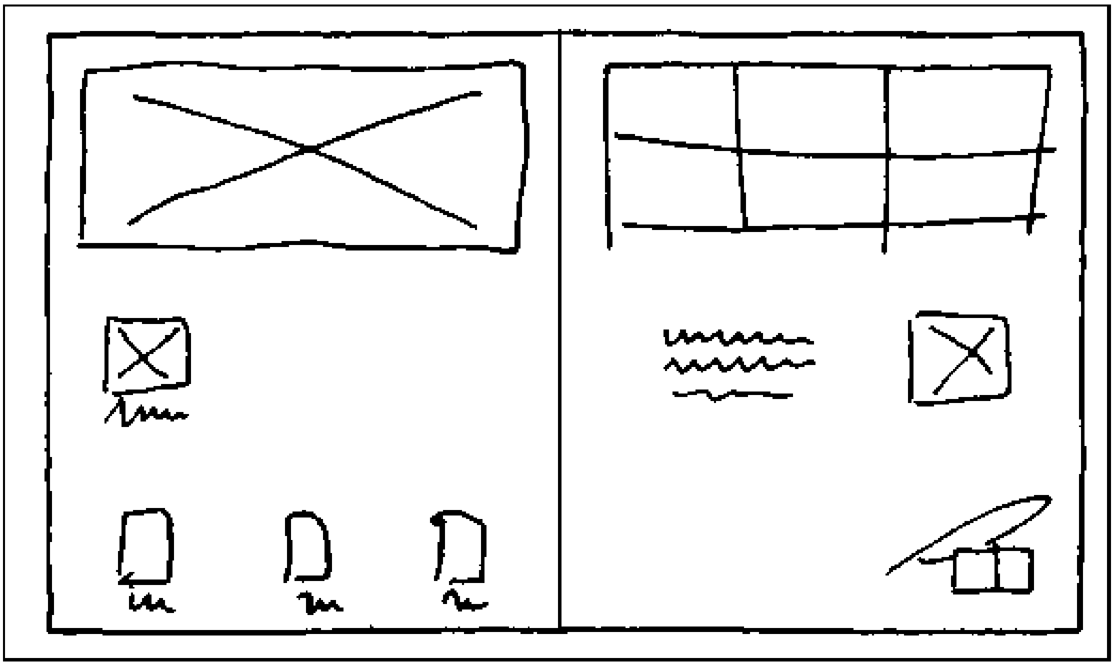

The two pages dedicated to reading consist of:

Left-hand side: A block to introduce the topic; A sentence using the new grapheme; The key word; The syllabic family.

Right-hand side; A table of new words; A text to reinforce what has been learned; A visual reminder of the new grapheme

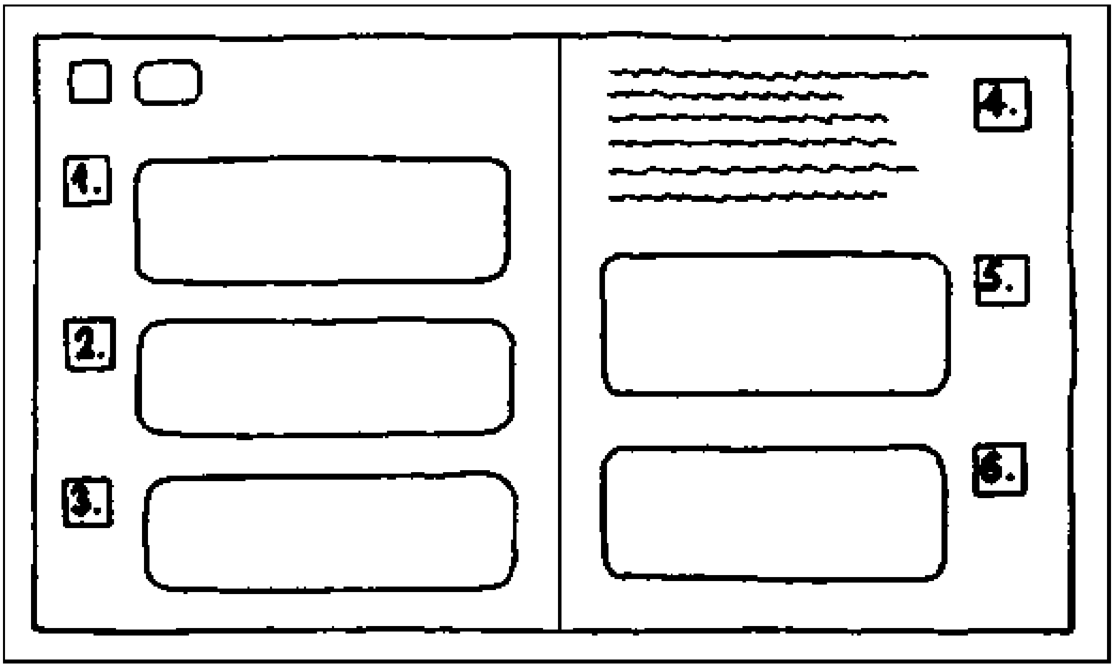

The two pages dedicated to writing consist of

Left-hand side: Words to read and copy in joined-up writing; Two-syllable words to write and copy; Ditto.

Right-hand side: A space for a text to reinforce the writing of syllables based on vignette;

A dictation of words on the basis of vignettes

The Layout Plan

Now you have your basic structure and can draw up a rough layout for the entire book. This model is known as the "layout plan".

Once again there is no need to respect the final format of the textbook, a smaller format will do just as well. If necessary refer to the layout plan for *Garabola,* which you will find at the start of chapter 1.

4. The Artwork

You now have an overview of what your book will be like, but the conceptual phase is still not over.

You have still to decide on the artwork, which is crucial so that you can write the text and so that you can request a first estimate from the printer (this is a compulsory part of conceptual work).

Now is the time to decide what sort of illustrations you need (diagrams, photos, etc.) and how they are to be printed (in one or more colours). We suggest the following procedure to ensure that your decisions are well founded.

Graphic Options Open to You

Consider firstly the options open to you to illustrate a textbook; these can be summed up as follows

	Colours		
Type of Illustration	1	2	4
Photos			
Realistic drawings			
Abstract drawings			

Purpose of the Illustration

Decide now what you want to achieve with the illustration; this will give you an initial idea as to which type would be best suited to your needs.

If, for instance, your primary aim is to impart information to the reader, you will find photographs (in history books for example) or abstract drawings (maps, diagrams, etc.) most suitable.

In a reading book, on the other hand, the illustration allows young readers to recognise visual elements from their own environment and thus to identify with the book at an emotional level. It facilitates the move towards the written word and helps young readers memorise certain written elements. The reader must thus be able to decipher the illustration with as little doubt and uncertainty as possible.

Realistic drawings, which allow the reader to select the relevant elements and discount any unnecessary information will often be more suitable than photos here.

Financial Considerations

The type or types of illustrations you have selected can be printed in three different ways: either in 4-colour, which will give you colours that are very close to natural shades, or in two colours, generally black and a light colour, or in one colour, which is usually black.

Sometimes the purpose of the illustration will force you to use colour; usually though your choice will be guided more by financial considerations, taking into account the following points in particular.

Image Processing

Your illustrations must be prepared for printing; for monochrome printing you can choose line photoengraving if your illustrations involve only black lines. If, however, you want to lend some depth to your illustrations you will need shades of grey; this is called halftone gravure, and is more expensive.

When illustrations are to be printed in two colours, the preparation of the colour inks and the screen will often give you good value for money; this procedure is significantly cheaper than 4-colour printing, especially if the screens are produced manually, as is often the case in developing countries. The uninitiated often think of the result as a “colour” illustration, without making a distinction between this and 4-colour printing.

4-colour printing involves separating the colours, and producing three negative films with the positive images printed in magenta, cyan and process yellow, to which black is added to give depth. This procedure is complex and we will not go into details here because we do not consider this a priority for you, it always being an extremely costly operation.

We cannot urge you enough to keep a close watch on costs, and to accord financial considerations the importance they deserve. In our experience, authors, anxious to produce a really worthwhile book, often reject out of hand reasonably priced options, which they associate with mediocrity. Sometimes they produce entire books in colour, and then cannot find anybody to finance them. Sometimes, the authors simply refuse to listen to reason and insist on having at least one page in colour in the book; they consider this a modest and acceptable request without realising that it is not enough to produce the colour drawings, but that they must be processed and printed, and that this can be extremely expensive as we will see in the next section[12].

Sobriety should not necessarily be equated with mediocrity in the field of graphics
Consult your printer again to ensure that your artwork decisions are well founded

Printing Costs

You should also look at the costs of printing per se.

In particular, you should be aware that for 4-colour printing each sheet must go through the presses four times with different elements being printed each time. That means that the printer must prepare his presses four times: the presses must be scrupulously well cleaned each time[13], the new elements to be printed (films or plates) fitted, the presses regulated, set, and of course the colours printed separately. For limited runs, the costs can be exorbitant[14].

Two-colour printing, on the other hand, lightens a purely monochrome print, by using black (and the various shades thereof in grey tones) and orange (and the shades from a very bright orange to the palest hue). The result is sometimes perceived by an uninitiated reader as being a “colour print”. Although the procedure is considerably more complex than monochrome printing it offers better value for money than 4-colour, especially in developing countries, where the screens are prepared by hand, making them fairly cheap.

Imposition

You may not plan to use colours on every page. If only some illustrations are to be reproduced in colour, you must identify which illustrations and which pages are involved.

You should then ask the printer about his imposition, i.e. the way pages are arranged on the sheets of paper for printing. Try to put the illustrations to be printed in colour on one sheet of this sort, since this can make for major savings[15].

Paper and Printing

If you are considering 4-colour printing, do not make a final decision until you are certain that the paper and the printing are of good quality.

> **There is no point in 4-colour printing on poor quality paper or under mediocre printing conditions**

The paper must not look like blotting paper and must be sufficiently opaque for the printing not to shine through onto the other side; “bulky news” (the paper used to print newspapers), for instance, which is transparent, browns rapidly and laps up ink is no good for 4-colour printing. The printer too, must have the skills and equipment required: for colour printing the printing presses must be extremely well regulated, and it is very, very difficult to set them with the precision required so that the blocks or plates match exactly. If they do not match exactly the reproductions of the various colours will be blurred and fuzzy.

If you cannot be sure that your printer can guarantee all these conditions it would be irresponsible to invest in expensive colour printing, the results of which will never justify the scale of the investment.

> **Don't focus on one single textbook. Take the entire series into account**

Long-Term Planning

Finally, even if your budget today allows for four-colour printing, you must be sure that you will have the money tomorrow as well for reprints, which must then also be in colour.

This aspect is particularly important if you are preparing a pilot version. It may be easy enough to finance 3,000 colour books, even if the unit price is very high. In some cases, the need for 4-colour printing will only be seen during the testing phase[16]. In general, however, you should only use colour once you are certain that the revised version, which may involve a large run, can be financed. If you fail to look ahead at this stage you may end up having to redo all the artwork and remodel the original text; this is more than a revision, it really does involve rewriting the entire book[17].

5. Provisional Costing

Until now, you have worked in a state of splendid isolation, as if you were the entire publishing chain.

For the first time now you must leave the confines of your office and make contact with the body which charged you with producing the book and with the printer. You must make the preparations for the manufacturing phase, checking whether or not the physical and graphic features you have decided on are acceptable from a financial viewpoint. The aim of this next phase will be to request a provisional quotation and ensure that it is within the limits of your budget.

To this end you will have to draw up your technical specifications, which will determine the costs of development and of manufacture.

Development Costs

In large publishing houses the publisher determines the costs of writing the manuscript and of the artwork. In other words this is the latest time to decide about the entitlements of the authors and the illustrator or photographer.

In general a distinction is made between the moral rights of authors and the royalties; the first entitles them to associate their name with the book that is considered to be their work, and the second could be considered remuneration for their work.

If you have worked on behalf of a private publisher, you will generally have to renounce the rights to your manuscript for a lump sum payment or a certain percentage of the sales price, in exchange for which the publisher will undertake to print your name in the finished work, among other things. If, on the other hand, you are a civil servant and produce textbooks within the scope of your normal duties, the ministry may not recognise your literary or artistic property, considering that this would make too great a distinction between your work and the work of your colleagues, which is just as important but much lower profile (e.g. in the field of teacher training). In this situation, certain international organisations specialised in this field, e.g. UNESCO, may be able to suggest a solution that is satisfactory to both sides.

It is a complex subject and the situation is changing all the time. Given the special profile of “publisher-authors” in some developing countries, certain international organisations are starting to re-examine the rights accorded to authors working within state structures, with a view to upgrading their work. Contact the body which has charged you with producing the book and settle this issue without any further delay.

Manufacturing Costs

These costs will always be calculated by the printer, who will base his quotation on the four following factors.

Composition

This involves setting the text by computer, making the corrections required after proofreading and the composition and layout of these texts on the basis of detailed instructions.

By this stage you must know whether you will be submitting a typewritten manuscript to the printer and let him typeset it, or, whether, as is becoming increasingly common, you will write the text on a computer and submit the floppy disk to the printer. You must also decide whether or not you intend to set and compose the text yourself, and, if you are using monochrome illustrations without halftones, whether you will produce the imposition scheme or submit the text and illustration separately to the printer to allow him to assemble each page on the basis of your instructions.

The production of textbooks has changed drastically over the last few years, not only in industrialised countries, but also in the developing world. Whereas it was common practice in the 1980s to ignore computer-assisted printing, today it cannot be overlooked. Anyway large-scale textbook production projects all have computer equipment.

> **A computer only facilitates and enriches your work if you know how to use it properly**

If you are in this situation, you must be aware that computers cannot replace the creative process, neither as regards the concept nor as regards the writing and layout of your book. It can, however, facilitate your work, if used properly since it will help you transform your own manuscript into copy, and will allow you to visualise your layout very rapidly. But, if you do not have a good command of the programmes used and are quite unfamiliar with at least the basic principles of typography, you can easily fall into one of two traps - either you will magnify your already crushing workload as authors, or you will not be able to make good use of the many graphic options the computer offers you.

Printing

Under this heading the printer will look at three items: the inputs, such as ink, the costs of labour and materials needed to undertake the preparations for printing, (preparing films, process work or plates), and the labour costs of printing the book (the inside pages and the cover).

The printer must know what size the run is to be, i.e. how many copies are to be printed, before he can calculate his costs.

Finishing

This heading includes all the costs of folding the signatures, putting them together to make the body of the book, and binding the finished book.

Educational materials need a firm binding

You should pay particular attention to the binding of your book - it would be madness to jeopardise all the work you have already put into the development by choosing the wrong binding.

The world of binding is complex, but we can sum up what you need to know as follows (see illustrations on the following page):

• Saddle stitching with staples is cheap, but there is a danger that the pages may fall out if the staples are too short. It is not suitable for thick books, since, when you come to trim the book, you will have to trim the pages in the middle more than the outside pages; this is unaesthetic and can be dangerous if the margins are narrow, since you run the risk of trimming away some of the text. (Fig. 1)

• Signatures can be block stitched (i.e. stapled flat) and then stuck together to the covers. This is a firm binding, which is relatively cheap, but it has the disadvantage that it is difficult to lay the book open on a table. (Fig. 2)

• Spiral binding is another option. It is the most expensive option, unless you are having a limited run printed and you have the equipment to allow you to insert the spiral binders manually; you could use this option for a pilot run of a few hundred copies. (Fig. 3)

• The pages can also be cut at the spine and then stuck. This is not too expensive and good quality adhesives are available today, but it is not recommended for school textbooks which are often handled roughly and may well start to lose pages rapidly. (Fig. 4)

• The signatures can be sewn with thread and then either sewn or stuck together. Stitching is expensive but it is the firmest option. (Fig. 5)

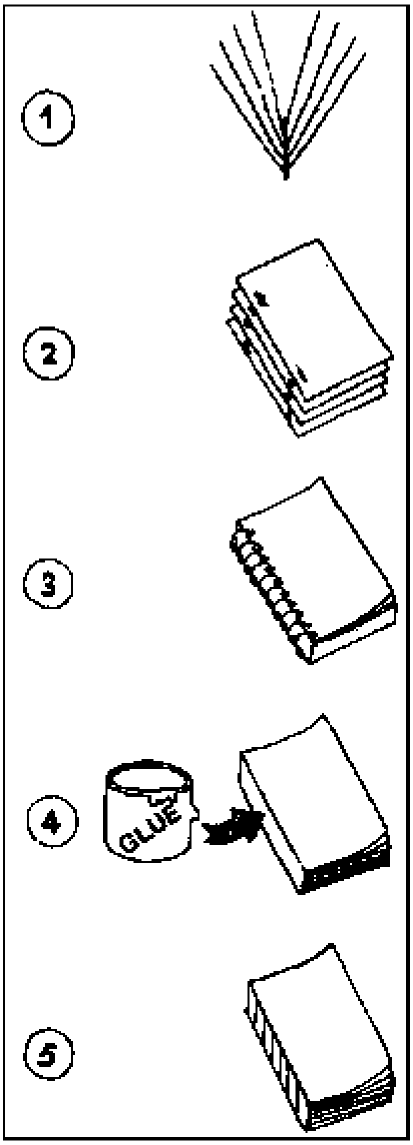

Paper

This heading covers not only the price of the paper, but also the cardboard used for covers and any treatment required (e.g. reinforcing the cover with plastic).

Again, find out about the main features of the paper from your printer (whiteness, thickness, tearing strength, impermeability, smoothness, price). Ask him what quality of paper and cardboard he can procure.

The quotation you are given should be considered provisional; it is a guideline for you to help you ensure that your decisions are well-founded, and to allow you to make any necessary modifications.

The instructions you give the printer must, however, be as clear and complete as possible - as should his quotation. If you do not pay enough attention to this point you may have a nasty surprise later, and you may not be able to pay the additional unforeseen costs.

6. Medium-Term Planning

You have made all the decisions regarding the physical and graphical aspects of your book - you may consider the conceptual phase over.

But, we would recommend that you draw up a medium-term work plan, i.e. up to the distribution of the books to schools, to ensure that the actual writing phase, which is about to start, runs smoothly without any major hiccups.

Make a list of the people who are going to be involved as from now in the development of the book and, finally, plan your activities as carefully as possible.

Actors

You should contact the individuals and bodies listed below at this stage, to ensure that they can provide their inputs on schedule.

Illustrators and/or photographers

Ideally, these individuals should be part of the team of authors from the start, but in practice they are very often brought in once the first draft of the texts is finished at the earliest.

You must select the people you want now, to ensure that they will be free to work with you when needed. It may take some time to select them. If you are working on the first book in a series, you should perhaps run a competition and then check in the field that the style of the illustrator you have selected corresponds to the preferences of the target group. As you will see from the time schedule for the development of *Garabola* in Table 22, this can take a lot of time.

Resource Persons

These individuals will review your manuscript and help improve it. They will include proof readers to eliminate typing and printing errors, educational advisers who will ensure that the book is appropriate for the teaching and learning conditions in rural areas, subject specialists who will focus on the contents, etc.

We recommend that you look for these individuals at as early a stage as possible and that you obtain their agreement in principle to work with you. We will look at the cooperation with them in more detail in the next chapter.

Work	1986 09	10	11	12	1987 01	02	03	04	05	06	07	08	09	10	11	12
Illustrators competition	■	■														
Presentation of illustrations in test schools			■													
Selection of an illustrator			■													
Development of texts and exercises		■	■													
Rough illustrations			■													
Writing parts of book not destined for pupils				■												
Manuscript read by animateurs working in test zone				■												
Presentation to official committee for approval				■												
Changes					■											
Final layout					■	■										
Final version of illustrations					■	■	■									
Preparation of imposition scheme							■									
Preparations for printing at printer; control								■								
Printing									■							
Finishing									■							
Definition of an evaluation strategy; preparing instruments												■	■			
Preparation for teacher training: 5-day courses														■		
Distribution of materials to test schools															■	

Work Schedule for Garabola

Publishing Unit

If the publishing unit rather than the printer is to typeset your texts, you will have to ask it to do the following:

- firstly, once the first unit of the textbook has been written, the publishing unit will set it to give you an idea of the length of the texts and the provisional layout;

- once the entire manuscript is completed, it will set all texts, including those that do not address the pupils (introduction, table of contents, etc.);

- finally, once the proofs have been reread and corrected, it will make the changes you want and do the layout on the basis of your detailed instructions.

In view of the fact that this unit is bound to have other commitments, lay down the approximate date on which you intend to submit your manuscript now so that the publishing unit makes time for you.

The Printer

Agree on the various things to be submitted to the printer, and the dates he can expect to receive them.

Work Schedule

By the end of the conceptual phase you should have drawn up a detailed work schedule, which will allow the textbook to be ready for the start of the academic year planned.

To give you an idea of the time needed, the table overleaf shows the planned schedule for the development and production of the pilot version of *Garabola.*

Don't take the contents of this table as a model, since working conditions vary from one country to another. Take them only as a frame of reference; in particular, look at the tasks listed and the time-scale reserved for each task and adapt these to bring them into line with your own situation.

> **This is the time to organise the people who will read and correct your manuscript**
> **Allow at least one year for the development and production of a first textbook**

7. In Conclusion

Detailed Documentation

You have now defined the contents and the form of your textbook, thanks to a systematic analysis of numerous factors.

To ensure that the quality of the development phase is as high as that of the conceptual phase, we recommend that you keep detailed records of every decision made. You can use two instruments to this end.

Logbook

You can keep a note of the key ideas in your work on a day-to-day basis in a logbook; you might note the reasons why a certain decision was made, any disadvantages it may entail, the repercussions for the teachers' guide, steps to be taken to put it into practice smoothly, etc.

These notes may be useful when the conceptual work is over and you begin to forget the odd detail.

Pinboard

If suitable for the way you work, you could prepare permanent pinboards to remind you at a glance of the framework for the texts and illustrations you are about to produce.

Keep a careful record of all decisions made during the conceptual phase

Notes

[1] Re-read the first point in the first chapter of this book to refresh your memory if necessary.

[2] The basic form of textbooks is always a rectangle, which creates a certain dynamism, rather than a square, which would neutralise tensions; for interesting ideas on this topic see Duplan, P. and Jauneau, R. *Maquette et mise en page,* p. 93-99. Paris: Usine Nouvelle, 1986.

[3] We have adopted the distinction made by F. Richaudeau between the “legibility corresponding to the integral reading of the lines of a text, or micro-legibility, (and) a second type of legibility, which corresponds to the image of the page as a whole, or macro-legibility.” In: *Manuel de typographic et de mise en page,* p. 9. Paris: Reitz, 1989.

[4] The limits of readability, as stipulated by M.A. Tinker for primary school children in the USA are as follows:

Grades	Bodies of letters
1	14-18
2	14-16
3-4	12-14

Cf. Typography for children's books. In: Bases *for effective reading,* p. 155. Minneapolis: University of Minnesota, 1965.

This means that the largest lower case letters without ascenders or descenders should be some 3 mm high (body 18), while the smallest characters should be some 2 mm (body 12).

[5] In chapter 7 where we will look at the basic concepts of layout, we shall come back to typographical options.

[6] For primary classes in developing countries C. McCullough and C. Chacko suggest significantly larger characters than those proposed by Tinker, i.e.

Grades	Bodies of letters
1	36
2	24
3	18
4	16
5	14

Developing materials for instruction. In: Staiger, R.C. *The teaching of reading,* p. 172. Paris: UNESCO and Lexington: Ginn and Company, 1973.

[7] Cf. Read, A. *A guide to textbook project design and preparation,* op. cit., p. 58.

[8] The paper costs as a percentage of the total production costs are put at the following

for 1,000 copies	28.5%
for 5,000 copies	47.6%
for 10,000 copies	53.5%

In: Smith, D.C. Jr. *Les problèmes économiques de l'édition des livres dans les pays en voie de développement.* Paris: UNESCO, 1977.

[9] The most common paper dimensions in the “A” series (in mm) are as follows:

A0:	841 x 1188
A1:	594 x 841
A2:	420 x 594
A3:	297 x 420
A4:	210 x 297
A5:	148 x 210

[10] There are, of course different ways of folding, cross folds, former folds, etc. It may be a good idea to use a combination, but the printer will have to plan for the necessary folding and inserting, and calculate the costs. Contact him and check that you have not made a mistake in either your choice or your calculation as to the number of pages.

[11] There are ways and means of not using a 16-page signature for non-text information; the printer is bound to suggest a half-signature (8 pages) for instance. If you are apprentice authors, we suggest that you do not go into this in any more detail, but that you consult the printer, and devote your own time and energy to tasks where you have no back-up.

[12] Beware of yourselves - authors who demand that their book be printed in 4-colour are always convinced that they are right and can easily fall into the trap of accusing anyone who

disagrees of thinking small, and wanting to throw a spanner in the works. Our most recent experience in this regard was a group of authors who wanted four-colour printing in a first-grade maths book because of pictures of butterflies in some exercises.

[13] You must bear in mind that every additional step in the production, even apparently simple steps, can entail unforeseen complications. When fuel is sometimes rationed, for instance, the printed may be tempted to clean his machinery less scrupulously, since petrol is often used to clean printing machinery.

[14] “4-Colour printing is approximately eight times as expensive as a halftone”, In: Richaudeau, F. *Conception et production des manuels scolaires,* op. cit. p. 214. 1979.

[15] Imposition can be extremely complex, and must always be performed by a specialist. Do not be ashamed of consulting a printer to find out more, if you are only an amateur in this field. Ank make sure that the printer has the knowledge he needs, which is - unfortunately - not always the case.

[16] Colour may be considered unavoidable in a pilot book which aims to upgrade a local language in order to produce a book which will be as attractive to users as textbooks in European languages, which are almost always printed in 4-colour.

[17] In 1979 in the pilot version of a 4-colour Quechua reading book the authors from the German-Peruvian Bilingual Education Project already mentioned chose the key word “puka” (red) to introduce the letter p and illustrated it with a red box. Since the revised version could only be printed in monochrome, this word and the illustration had to be changed, triggering a chain of modifications throughout the book.

Recommended Reading

Layout

DUPLAN, P. AND JAUNEAU, R. *Maquette et mise en page.* Paris: Usine Nouvelle, 1986

GUERY, L. *Précis de mise en page.* Paris: CFPJ, 1988

RICHAUDEAU, F. *Manuel de typographie et de mise en page.* Paris: Retz, 1989

Typographical Legibility

TINKER, M.A. *Legibility of print,* Ames, Iowa: Iowa State University Press, 1963

TINKER, M.A. Bases *for effective reading.* Minneapolis: University of Minnesota, 1965

Manufacturing Costs

DURCHON, P. *Photogravure et impression offset.* Paris: Usine Nouvelle, 1987

SMITH, D. *Les problèmes économiques de l'édition des livres dans les pays en développement.* Paris: UNESCO, 1977

Author's Rights

ALTBACH, P.G. Copyright in the Developing World. In: FARRELL, J.P. AND HEYNEMAN, S.P. (Ed.) *Textbooks in the Developing World.* Washington D.C.: World Bank, 1989

COLOMBET, C. *Grands principes du droit d'auteur et des droits voisins dans le monde. Approche de droit comparé.* Paris: Litec, UNESCO, 1990

UNESCO *L'ABC du droit d'auteur.* Paris, 1982

To Sum Up

Once the authors have defined the subject matter to be covered by the textbook they are still not ready to start writing: they still do not know how long the texts should be or how to fit them together with the artwork. To allow them to write well-founded texts and avoid the blunders that a poorly planned assembly of texts and illustration would entail, they should draw up a model of the book.

Before you design each page, it is important to define the main physical aspects of the book as a whole, in particular the format and the number of pages. It is equally important to think about the graphic aspects, i.e. to work out a provisional layout and decide on the nature of the illustrations. Much of this work demands specialised know-how, which is why publishers contract specialists who report to the production manager and the artistic manager.

Teams of authors working in developing countries rarely have the specialist know-how for this phase, but they are always left with the responsibility when the publishing back-up is not forthcoming. Given the fact that few authors will have any back-up from professionals, such as a layout man, most of you will have to acquire a working knowledge of layout and printing techniques and methods. You should consult specialists in your country, especially the printer, and try to put their experience within a systematic framework by reading specialised literature among other things.

The conceptual work should culminate in two documents:

- A detailed work schedule covering the work of the authors and the external inputs required during the writing and manufacturing phases;

- A quotation drawn up by the printer with a view to confirming the decisions made regarding the physical and graphical aspects of the textbook, or to calling into question these decisions.

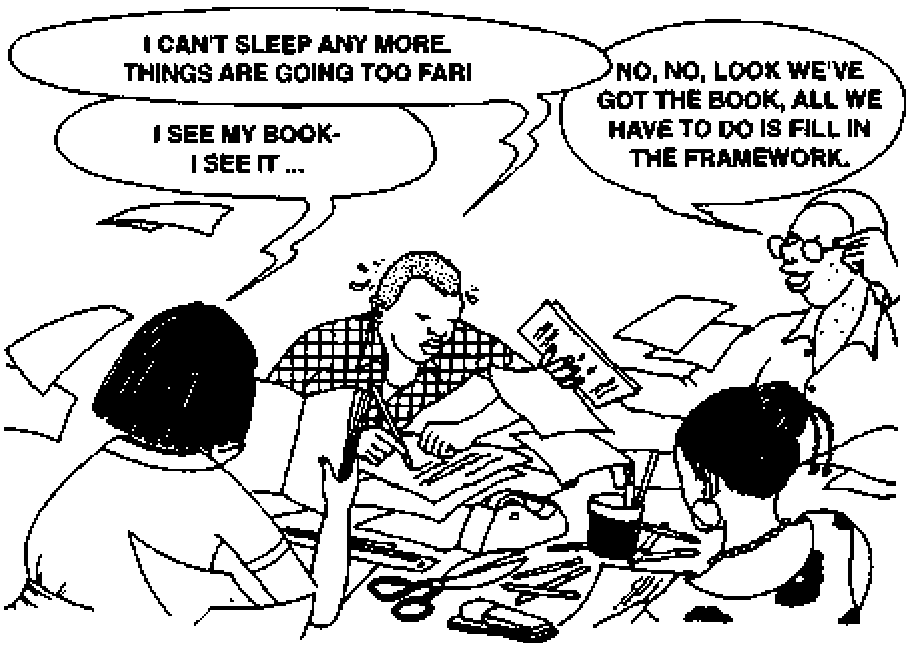

Writing the Text

During the previous phase you decided on the contents of your textbook and on the artwork, which enabled you to define the sequence of the learning matter to be covered, and to lay down a basic visual structure for the book. The phase you are about to start will be a continuation of this work, culminating on one hand in finished texts and exercises, and on the other in the sketches or “roughs” for accompanying illustrations.

The literary and graphic work during this phase must go hand in hand. In large publishing houses the authors are responsible for the literary side only, while the artwork is entrusted to a layout man and/or a graphic artist. In developing countries, however, authors are almost invariably responsible for both sides. In this chapter we will first look at the preconditions for creating what Richaudeau terms the “text-image couple”[1], before going on to look at the subsequent stages step by step.

Some of you will be sufficiently familiar with text-writing for it not to present any major difficulties. The visual presentation and illustration of texts and exercises on the other hand will be new ground for many of you, and difficult for all of you. You will have to understand the importance of bearing the visual aspect in mind as you write your texts. You will need to learn to do so by constantly weighing up the demands of the text and the presentation.

Even if you are no longer a novice where writing is concerned, we would urge you most strongly to read this chapter thoroughly, to ensure that you glean not only scattered pieces of information, but the entire systematic approach. Put yourself in the place of authors who have defined a detailed conceptual framework, and must now write, present and illustrate the contents of their textbook within a relatively short space of time; read the chapter from start to finish, point by point.

> **You must do more than write a text - you must fit text and image together to create a harmonious whole**
>
> **Plan your writing**

1. Overview

The phase you are about to start will seem impossible to structure for some of you, who believe that the texts and exercises will simply come together with time.

However, if you aim to produce high quality material within a given time-scale we recommend that you do not merely wait for inspiration to strike. Forget the romantic image of the literary genius alone in his garret and plan this phase as strictly as possible. By way of reference, we will, as always, give you an overview of the work involved taking the example of the work on *Garabola.*

Writing Garabola

We have selected this textbook as an example because of one particularly interesting feature - since this was their first book, the authors chose to take a systematic approach, trying to avoid any unnecessary delays for the education authorities. The often contradictory goals of quality and keeping to schedule forced the authors to tackle the writing and illustration work in tandem.

We feel that this approach, which is described in detail in Table 23, should not necessarily be taken as a blueprint, but it is interesting and may be useful for teams of authors working under time pressure.

2. Organising the Work

Once you have a general idea about the form your literary and artistic work should take, you can organise the writing work and decide what approach you wish to take.

Why, you may ask, can't we get down to writing the texts at last after all the research and the conceptual work? Because you must firstly define the framework, without which your subsequent work will be subject to inopportune interruptions. You should thus accept a certain amount of “lost time” at the start of this phase in order to guarantee optimum writing conditions. Look in particular at the following points.

Start by deciding how much time you will need for the writing phase

Rate of Working

Take stock of the work ahead of you, before you do anything else. Recall the number of texts to be written: for a reading and writing book with 24 units, for instance you will have to write 24 texts if you plan to have a single text per unit, or 48 or 72 if you plan two or three texts respectively per unit.

Then recall the principal features of the contents and the presentation of these texts: to take the above example, once again, look at the sort of texts (adventure stories, fairy tales, historical texts, scientific texts, etc.), the approximate space available for each text on the page, and the average size of characters to be used. You should then turn your attention to the number of exercises to be devised: if you plan to devise two pages of exercises for each of 24 units or lessons with three exercises per page, you will need no less than 144 for the textbook as a whole. Finally, you should count the number of general information pages and look at the length of texts on these pages.

Now and only now can you set the markers which will allow you to lay down your time schedule. You should either lay down a daily or weekly quota for the writing work, or set deadlines for the individual parts of the book.

23. Developing the Garabola Reading and Writing Book
Planning and Organising Writing Work
The authors started by defining the type of writing work to be performed and how they were to be fitted together. They set quotas in line with the work schedule drawn up at the end of the conceptual phase for the textbook as a whole. They also decided how they proposed to conduct the writing.
Writing the First Version of the Reading Texts
The authors settled down to write the textbook per se, starting with the reading texts. They adopted a systematic procedure, developing a list of criteria, identifying the topics to be tackled, deciding on the type of texts, writing and producing the artwork for a first unit which was then used as a model for the rest of the textbook, and then writing the other units. The authors then ran a series of checks on the texts produced.
Organising and Supervising Illustration Work
Since the illustrator had been selected and approached during the conceptual phase, the illustration work could start; he illustrated the reading texts while the authors devised the exercises.[2] Collaboration between authors and the illustrator took the following form: a contract was drawn up in line with the work to be performed, the contents of the illustrations were stipulated as was their layout on the page, drafts were produced and any changes made, the illustration techniques and instruments were stipulated. Once the layout had been finalised, the illustrator produced the final versions of the illustrations.
Writing the Exercises
While the illustrator was preparing sketches for the reading texts, the authors started

	work on the exercises. They established a list of criteria, identified attainment sub-targets, defined the space available for each exercise, selected the type of exercise, developed the exercises, devised the presentation, and ran an internal check. The illustrator produced sketches for the exercises once he had finished those for the reading texts, observing the same procedure.
External Review	
	Once the manuscript was completed, various people from outside the group of authors reviewed the texts checking the linguistic aspects (pertinence of newly created technical terms, correctness, clarity, uniformity of style), subject-related aspects (coherence and exactness of contents), and pedagogical and didactic aspects (suitability for the given teaching and learning conditions). Others reviewed the illustrations from the pedagogical angle (clarity, exactness and pertinence of the scenes or objects represented), and from the cultural and political angle (respect of local customs, representation of scenes that are applicable for the country as a whole and not just certain regions).
Writing General Information Pages	
	The authors wrote texts for the cover and general information pages at the front of the book, taking into account pedagogical aspects (the technical presentation of the textbook), legal requirements (credits and copyright), institutional factors (preface and mention of the ministry), and editorial conventions (on the covers and all pages in question).
Preparing a Copy of the Manuscript	
	Having examined the internal suggestions and those of the external reviewers, the authors modified the initial manuscript and had a typewritten version prepared.
Preparations for Official Approval	
	To obtain authorisation to print, the authors prepared a file for the education authorities, containing a list of information and a hand-crafted mock-up of the textbook, on the basis of the typewritten manuscript and photocopies of the sketches. They were granted authorisation to print, the final layout was performed and the graphic work finished: the two files were then submitted to the printer to allow him to start work on the textbook.

Whatever you decide, try to avoid two common errors a) under-estimating the volume of work which is not directly related to writing, such as organising external checks; just when you think you have finished writing, you will often need several weeks more to complete the manuscript; b) with reading and writing books, under-estimating the level of complexity of the exercises, and not planning the development properly.

Writing and illustration work progress in tandem
If you do not have good editorial back-up, this phase will be a busy one

Group and Individual Inputs

You have drawn up your time-frame for the writing phase, and now you can go on to define how you intend to meet the deadlines you have set, defining the interaction of group and individual inputs.

While nobody would question the value of group work, some of you may ask when and how texts should be written by the group as a whole.

You can answer this question by identifying the type of writing demanded by the situation. Here are three possible options, which we have used in the past: analyse them, and decide which one best meets your needs.

Group Writing

Each text is written jointly; the authors formulate the text aloud in the group and then modify it, until they can agree on a version which is written down and considered definitive by everyone in the group.

This procedure has the advantage of preventing individuals from getting caught up in errors and allowing everyone to identify with the final version. On the other hand it may provoke tensions in the group, if you do not listen to those who are not good at formulating their ideas verbally, or who cannot defend them well.

Sometimes group writing will appear unavoidable. When, for instance, you are defining key words and writing key sentences for a first reading book the text is subject to such strict limitations that it is difficult to work individually. In our experience group work, where texts are formulated aloud, provides the best forum for applying pre-defined criteria to the words and texts to be developed.

If you are in this situation, have a look at Table 25, which outlines the criteria to observe when developing texts for a reading book. Read these and adapt them to your own particular situation.

Individual Writing and Correction

Here, the texts are written by individuals, revised at individual level and then, perhaps commented on by the group.

Individual writing can jeopardise the uniformity of the texts

24. Work for which authors are responsible

To allow you to gauge the scope of the work for which authors are often responsible during this phase, we list below the tasks from the previous table which fell to the authors of *Garabola.* We have made a distinction between the work they had to perform themselves and the tasks they only had to organise or supervise.

No.	Task	Organisation and Supervision
1	Overall plan of texts and artwork	
2	Devising and writing reading texts	
3	Internal revision of reading texts	
4		Preparation of illustrations for reading texts
5	Correcting sketches	
6	Devising and developing writing exercises	
7	Internal revision of exercises	
8		Preparation of illustrations for exercises
9	Correcting sketches	
10		Revision of entire manuscript by externals
11	Writing general information pages	
12	Final changes to the manuscript	
13		Preparation of a typewritten copy of the manuscript and production of hand-crafted mock-up
14	Drawing up specifications for textbook	
15	Organisation and moderation of official revision session	

This approach is often favoured by authors who are not used to working as part of a team, who see it as a fair compromise between the individual work they are accustomed to and the inevitable group work.

It does, however, have many disadvantages; the authors, themselves immersed in writing, do not always have the distance and the calm needed to judge the inputs of others fairly, and are reluctant to contradict their colleagues and criticise them. Some texts are thus accepted with reservations and the finished product displays a lack of cohesion and uniformity.

You should only adopt this approach if you have the back-up of a good publisher who has the skill, the distance and the necessary authority to suggest the necessary changes.

Individual Writing and Group Revision

This approach involves every team member tackling the same text at the same time and handing it in without having time to perfect it; the individual inputs are then put up on the board and the group agrees on one text, or at least on a general direction, a basic text which can then be reworked to a greater or lesser degree.

25. Identification of Key Words in the Group
In reading books graphemes are generally systematically introduced with the help of certain words known as "key words". Team work is needed to identify these words. It is the best way to harmonise criteria as demanding as those listed below.[3]
Productivity and interest for pupils
The key words must trigger a strong emotive response in the pupil. If the basic vocabulary of the pupil has been studied, you should refer to the results of this study and select the most frequently occurring words.
Pedagogical and didactic considerations
Key words must reinforce the new element which the pupil is to learn in the course of the lesson. If it is a consonant, it should be at the start of the word, or at least at the start of the syllable.
Simplicity of syllable structure
Wherever possible, you should select key words made up of V (vowel) syllables or CV (consonant-vowel) syllables; try to avoid CVC syllables, which would be an obstacle later when you come to splitting words into their component syllables.
Control of new **elements**
The new element which is the object of the lesson should, if possible, be the only unknown element in the key word; you should thus avoid choosing key words with more than one consonant or vowel elements which has not already been presented systematically.
Grammatical category
Most key words should be nouns. For semantic and graphical reasons, only a few verbs (verbs of movement for instance) would be suitable. Adjectives of colour should be used with caution: you must be aware of the type of printing that will be used, not only for the pilot version, but also for the revised version. Avoid adjectives of colour if the textbook is to be printed in monochrome.
Degree of visualisation
Nouns that cannot be illustrated should be discarded. Then, of the nouns that can only be presented visually in a moderately satisfactory way, only the indispensable ones should be retained. Bear in mind that liquids in general are difficult to illustrate, and can lead to interpretation difficulties when you are dealing with young readers who have had little contact with printed materials.
Unequivocal correlation between key word and its illustration
The relation between the word and the illustration should be unequivocal if possible. In our experience images of people are difficult in this way, so key words such as "people", "man", "woman", "girl" "boy" etc. should be avoided, since the images are subject to more than one interpretation.

This procedure has several advantages. Firstly, the short time allowed for writing prevents each individual from identifying too closely with his own text. Secondly the fact of putting up all the inputs prevents new authors being so awe-stuck by the process of intellectual production that they are paralysed: the writing work unfolds step by step before their eyes in a certain anonymity, which robs it of its mystery. Finally the revision phase, which is often much more extensive than the writing phase, allows all group members to contribute to the final version and identify with it.

We should, however, point out one major disadvantage: if the authors want to retain a high quality they must identify the best texts irrespective of the originator, and the text, once selected, must be re-worked for as long as necessary, while taking care not to jeopardise the group dynamics. This is only possible if the group is made up of individuals who are not only of a high professional calibre, but who are also intellectually honest and extremely patient. In our experience all the charisma of an internal group leader is needed if the work is to run harmoniously over a longer period.

Working Language

If you are writing textbooks in a national language, it is conceivable that some members of your team may not speak this language. You will then have to agree on a common working language; this situation, common in projects which have received external technical or financial assistance is certainly not ideal, but it is sometimes unavoidable.

If, on the other hand, all the members of your group speak the national language in question, and this is accepted as the working language, other problems may arise to which you should be receptive. If the language in question does not have a long written tradition, it will often lack the technical terms you need, or these terms will not be precisely defined, lacking the background information which surrounds these terms in languages with a long written tradition. A certain laxity can result, which will prevent the national language from being an effective tool, consistent, diversified and precise.

Thus, if you are dealing with a teaching syllabus, will the language provide you with one word for “goal” and another for “finality”? Would you know how to say “sequence of numbers”, “set of numbers”, or “double-entry table”, all terms which will be vital for first-grade maths? How can you express “key word”, “word card” “word table” or “minimal pairs” so important for the development of reading materials?

Agree on the language of communication
Identify key words together

If your work is too often interrupted by terminological considerations, you should analyse this handicap, and take appropriate steps, to allow you to complete your work. You can systematically record neologisms and put them on the board to farce yourselves to use them; or draw up a definition of terms which you keep stumbling over. You can include these definitions in a glossary at the back of the teachers' guide.

Write directly in the national language to follow the logic of the language

Language of Writing

If you are producing a textbook in a language with no written tradition, it is common for only a few team members to be able to write it fluently. In this case, you should agree which language the inputs should be written in before you start to write.

This question is particularly relevant for texts which do not address the children, the technical presentation of the book for instance, and later for the teachers' guide. In the groups we have observed, we have noted two possible approaches to writing texts.

Translation

The inputs are written in the European language common to the entire group, and then translated into the national language in question.

The advantages of this approach are clear: a highly specialised pedagogue can, for instance, write a text on learning to read in English, French or Spanish, which can then be translated into the national language by a colleague who is less well versed in the theory.

It is a procedure with a two-fold risk, however. Firstly, some authors, finding themselves downgraded to resource persons and translators may lose their motivation and give up on the group little by little. Secondly, internal leaders may emerge and introduce a vertical element within the group which will further limit the opportunity for dialogue.

Step by Step Writing in the National Language

In this case, the texts are written step by step, as follows:

- common development of the criteria to be observed (in the European language)
- corresponding texts written (in the national language)
- verification firstly orally and then with the help of translation of certain passages into the European language, to check for congruence, followed by any corrections needed.

This approach too is less than perfect; in particular, if we take up the same example, the pedagogue is not always able to judge precisely whether or not his instructions concerning reading have been fully understood and correctly translated.

Yet, it is often more effective than translation. Firstly, it allows those in charge of writing texts in the national language to re-formulate technical information in their own language; they can move away from the initial wording and organise the information appropriately, following a chain of argument which will be better understood by readers, and especially by teachers[4] - the local writers are in a much better position to judge this than the external specialist.

This formula also allows all those concerned to see themselves as fully fledged authors and thus to identify with the product which really is the result of a joint effort.

3. Texts Addressing Pupils

You have now organised writing and defined your framework. Your next objective is to produce a manuscript for all the reading texts, that has been revised by the group of authors.

To achieve this as methodically as possible, we suggest you take a step-by-step approach, as described below.

Criteria

Whatever the discipline and the grade, you must always base your pupils' texts on precise criteria. Do not simply agree that these texts should be dictated primarily by pedagogical and didactic considerations; take it upon yourself to conduct as exhaustive a study as possible and to draw up precise criteria.

To take stock of what your work at this level can involve, examine the list of criteria drawn up for reading texts in national languages, presented in Table 26. The list is long, but it is by no means exhaustive and may not be suitable for your particular situation.

Topics

You have identified the main features of the texts to be produced. To be one hundred percent operational, you must now draw up a list of the topics to be tackled.

In our experience, in primary school textbooks projects authors often start by producing a first reading book, in which the topics are defined by key words; this first book thus automatically reflects the everyday world of the pupils. In the textbooks for the following grades, these topics are repeated, for various reasons. Firstly the authors often see the texts as a way of achieving pre-defined language targets, primarily as a good basis for grammar and vocabulary exercises, and do not thus attach a great deal of importance to the selection of the topics. When national-language books are produced, the authors do not always manage to satisfy the contradictory demands of authenticity (as seen in the selection of topics related to the socio-cultural environment of the child) and openness to the outside world. They often opt for the endogenous to the detriment of the exogenous, and stay within the limits of the first book. Finally, most of them quite simply find it difficult to break out of the traditional topic framework of reading books for the primary level.

Two observations should, however, be made: in groups of authors, the selection of topics is rarely the result of systematic considerations, and the difficulty of the selection process is almost always underestimated. We again suggest a step-by-step procedure when you begin to select topics for the higher classes at primary level.

Select topics for reading books on the basis of precise criteria

Official Instructions

First of all check how the curriculum defines the role of the school within society, and see if detailed topics are listed as is often the case. If this applies to you, check whether you are bound to remain within the official framework and tackle a certain number of topics.

Type of “reading book”

At this stage you must decide what sort of reading book you want to produce. It may address solely native speakers learning their own language, in which case the aim will be to improve their reading skills, which will give you a lot of leeway to choose topics. However, when pupils have only a reading book and a maths book, you should consider whether a simple compilation of reading material is really the best option. You may chose to add texts which will introduce children to common scientific, historical and geographical knowledge for instance. This is a fundamental decision, which is bound to have repercussions on the choice of topics and on the curriculum.

Social Options

The topics broached in a primary-level textbook will help form the adults that the pupils very soon become, especially those individuals who will read few other books in the course of their lives. It is up to you to organise an in-depth discussion to define the factors which you believe should be given priority, where the curriculum is vague.

Openness to Innovation

Finally, bear in mind that it is difficult for authors of primary-level textbooks to find resource material: try not to fall back on your own experience and on the past. Read and re-read as much as you can, from legends to adventure stories, from extension manuals to foreign books, from cartoons to the best books written for children world-wide, to put you in a position to innovate as regards the content matter. Textbooks for the upper classes of primary level will always demand a lot of preparatory work here.

Development of a Model Unit

To sum up, you have laid down the approach you intend to take, drawn up a list of criteria and identified the topics for your reading texts. You can now start writing the texts.

26. Criteria for Writing a First Reading Book in a National Language[5]
Texts corresponding to the general attainment target
Texts must firstly be in line with the general targets set for reading in the grade in question. Thus, if the pupils are to learn to read and understand the literal sense of short, explicit messages, you should not produce texts that the pupil must complete to understand the meaning.
Texts corresponding to the specific attainment target of the lesson
Whenever the lesson has a specific reading target, the texts must meet these specific demands; thus if a new element is to be introduced, such as an upper case letter, the texts must allow for the systematic introduction of this element.
Controlled use of words
The words used must be in line with learning needs, i.e. a minimum of new words should be used at the start, and they should be repeated a number of times to imprint them on the memory of the pupil.[6] Elements which the pupil has not yet learned systematically should not be used.[7]
Readability of words
The words should not exceed the maximum linguistic readability for pupils; in languages used world-wide the authors can refer to research conducted since the 1940s. In most national languages, special features will determine the readability of words.[8]

Readability of sentences

The sentences too should not exceed a maximum level of readability: they should be short and have a simple morphological and syntactic structure. Here too you may find research done for world languages helpful, but in many national languages, the readability of sentences will depend on other criteria. Thus short sentences, used at the beginning of the learning procedure must make for maximum readability without being artificial or excessively simplified - a tall order for languages with a primarily oral tradition, which are not easy to dissect in this way.

Readability of texts

The texts must be clearly structured, with an introduction, however short, and an unambiguous conclusion; within the text the sentences should follow on one from another. If necessary the text will be divided into paragraphs, which will also follow on logically. Punctuation marks, which underline the structure of the text should be introduced gradually and with discretion.

Functional texts for teachers

Texts should be structured to make them easy to read in class. Thus, if a text is to be read at two sessions, it should be written accordingly, i.e. in two main sections, not counting the introduction and the conclusion.

Degree of visualisation

The words, sentences and texts must be selected to provide an appropriate degree of visual back-up so as to form a whole which meets both pedagogical and aesthetic demands.

Familiarity to pupils

The topics dealt with should be at least known to the pupil. In a first reading book, they will be dictated by the choice of key words and should preferably be taken from the pupils' immediate environment. Subsequent reading books should expand their scope gradually to take in the region, the nation and then other countries.

Variety of topics

The topics selected must be varied enough to hold the attention of pupils.
This is a difficult criteria to meet in an entire series: authors frequently repeat themselves, with the result that the same topics are presented with increasing levels of difficulty in a spiral from the first to the last book in the series.

Idyllic past and glorified future

The texts should reflect today's world, which is often a world in transition. They should avoid any nostalgic descriptions of times gone by - which were rarely idyllic - and should equally avoid glamorising a modern world which is likely to be unknown to the majority of pupils.

Games aspect and topics liable to provoke conflict

The texts should firstly look at the universe of the child. It should focus on the happy side of childhood, but should not completely eclipse conflicts and the negative side - conflicts, problems and fears of childhood should be mentioned.

Respecting the environment

Religious and political topics should only be broached with great care and social taboos should never be mentioned.

Texts for children and grown-ups

The texts should be worthy of the child and the grown-up he will very soon become, because for many children in developing countries, given the rate of absenteeism, it is true to say that adult life begins after one or two years of schooling. In the books, anecdotes, recitations and games should thus alternate from an early stage with recipes and user's instructions, a literary genre with which they are most likely to come into contact in adult life[9].

New fields of use

The texts should pay enough attention to the traditional role of the national language (poems, legends, descriptions of daily life, etc.) but should also look at roles more often played by European languages (slogans, puzzles, recipes, posters, invitations, etc.).
In other words the national language should emerge from the domestic ghetto to which it is often confined and should be upgraded by bringing it into the domain of modern life, traditionally the realm of the former colonial language.

Initially stick to the first unit, which will be a sort of test ground for you, and adopt a three-step procedure: refer to the basic structure and work out approximately where the texts and illustrations will be; write the texts in question and decide on the contents of the illustrations; prepare the text with the size of characters required for the level in question, which will allow you to see the average length of texts in the book, and prepare a sketch for the illustrations.

We would advise you to tailor your procedure to the subject and the grade concerned. Thus, if you are responsible for producing a series of books for pupils learning their native language at primary level, you should distinguish between the two types of book described in more detail below.

First Reading Book

Given the primordial importance of the picture, which will take up a large part of the page and form a bridge between real-life and the new technology of reading, it is often preferable to work manually. You should thus draw up test pages in the correct format, and then write very short texts yourself, and make a rudimentary sketch of the illustration to accompany the text.

In view of the fact that this parallel approach to text and image often leaves a lot to be desired we have reproduced opposite the steps involved in the birth of one page of *Garabola.*

Books for Other Grades

When the texts are more dense, it is more difficult to assess the length. If you are working on a book for a higher grade, submit the first unit to the publishing unit, which should typeset it in line with your instructions. You can then re-work the text to ensure that it is of the right length, and make a sketch of the drawings planned.

Bear in mind that whatever the level involved, the texts and illustrations should always be developed together, following the basic structure.

Development of the Other Units

Taking your lead from this first unit and your basic structure you will now be able to write the texts for the other units without any major difficulties.

Revise your textbook, bearing in mind the needs and possibilities of users
Keep a careful record of your reading texts

We recommend that you compile the following, day by day.

Text File

The texts selected by the group should be filed carefully, in a box file, for instance, and each of them accompanied by a sketch, however rough, of the scenes or items planned; a sketch is always better than instructions alone.

Logbook

We also recommend that you continue to keep the logbook you started during the conceptual phase. Document your work; in particular keep a record of the instructions you plan for the teachers' guide, which you will otherwise forget before you come to produce this guide.

Internal Revision and Changes

The concentration needed during the writing phase is such that it is generally impossible to stand back from the texts and check their quality thoroughly. You should thus wait until all the pupils' texts are finished before conducting a series of internal controls.

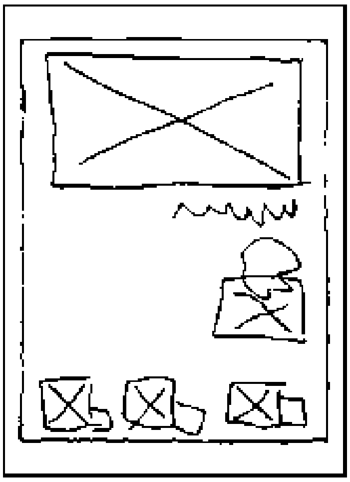

1. Conceptual phase - the contents and the form
Contents are defined and a mock-up of the page completed.

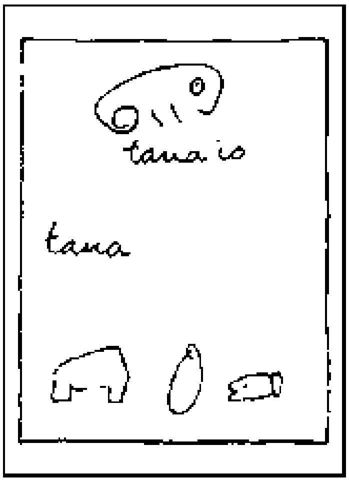

2. A text-image unit is created and the text written
Texts and sketches of illustrations completed.

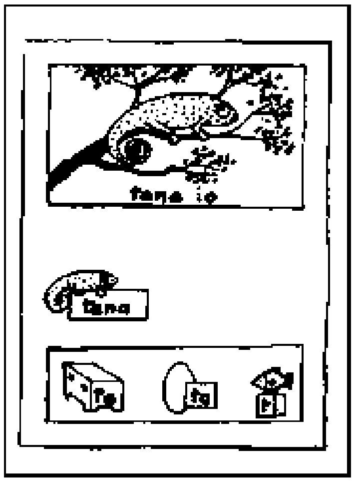

3. Layout and illustration
Text typeset, layout finalised and illustrations done in ink.

Remember, you cannot postpone this work; it must be completed before the other external revisers start their work. We would suggest that you examine the following aspects in particular.

Legal Aspects

Many of you will be well informed about the rights of reproduction and know that it is strictly prohibited to reproduce texts or illustrations without authorisation[10].

Although authors do not generally infringe copyright, they may have absorbed existing texts to such a degree that they reproduce them, as they are, changing only details. Even if they are not aware of this, they will be guilty of plagiarising. Check that this has not happened with your manuscript: copyright infringement can result in expensive legal action and plagiarism is not the best advertisement for a group of authors.

This point, which is scrupulously observed in industrialised countries, is often ignored in developing countries. We have seen groups of authors, who did not pay attention to this point being tripped up by harsh reality at a later stage. To ensure that what is often nothing more than ignorance does not become a time-bomb ticking away under your work, find out about the basic principles of reserved rights; the books listed at the end of the chapter may be useful.

Do not copy or plagiarise

Social Options

You should also review the social options which you will automatically have selected as you wrote. Analyse the roles which you have attributed to the various protagonists: look at the number of times each of them appears in the texts and sketches, look at the occupations of mothers and fathers, of girls and boys, etc.

Then take a hard look at the social image reflected by the textbook: analyse the role of institutions, first and foremost the school, look at the angle you have taken on authority, be it parents, teachers or village elders; and look again at the way you have responded to certain crucial topics of today, the most important being the protection of the environment.

If you now, in retrospect, see serious imbalances or omissions in the texts, correct them - you still have time. You can either modify them or change graphic elements, which will sometimes be enough to redress the balance of the text-image unit. If, for instance, you wish to upgrade the role of women, and you note that there are fewer women than men in your textbook, you can redress this balance by making women figure more often in illustrations. Be careful in your choice of setting for these illustrations though. If you wish to upgrade the status of women do not show them performing only menial work.

Linguistic Checks

If you are producing a first reading book, you should pay particular importance to linguistic checks. First of all, count the words used in the book, and then look at the average length of these words, classifying them by number of syllables. List the words used only once and try to limit these. Look at the intervals at which words are repeated, etc. If you are producing a textbook for upper grades look again at the linguistic readability which you considered in advance, and see if you have respected your own criteria.

If, on the other hand, you are producing a book in a language with no written tradition, you should run specialised linguistic checks, for which it may be difficult to find back-up literature.

Given the importance and the complexity of the subject, we will take the liberty of dwelling on it a little in the table on the following page.

4. Exercises

The first version of the reading texts has now been completed. If your time schedule permits, you can put these on hold and concentrate on the rest of the book. If you are working under time pressure, as will often be the case, however, you should first finalise the artwork, adopting the procedure laid out earlier, so as to ensure that the illustration work can run parallel to your work on the exercises.

Writing exercises, unlike copying or traditional “fill-in-the-gap” exercises demand special skills. Since there is little specialised training available in this field, authors with the skills required to design good exercises are equally extremely rare ... and those who appreciate the degree of difficulty of this work are even rarer.

We see the results of this shortcoming everywhere: in some European textbooks the objective of the exercises is anything but clear, the mechanism used is sometimes overly complicated, the games aspect is often poorly represented and even errors are not unheard of[11]; textbooks produced in developing countries often dedicate a limited space to exercises, and reflect a certain disarray on the part of the authors.

We can only repeat that it is extremely difficult to design good exercises, much more difficult than to write texts for reading. The approach we suggest here will certainly not solve all your problems, but we hope that it will allow you to avoid the worst pitfalls and errors.

> **Choose an easily understood mechanism and an appropriate form of presentation for your exercises**

Drawing Up a List of Criteria

As is the case with texts, you should never start designing exercises without first drawing up a list of criteria, which should be as precise as possible. The quality of the exercises in your books will depend firstly on the quality of these criteria. You should thus approach this first step with the rigour and the meticulousness it deserves.

Some criteria are general in nature, and can be applied to any subject and any grade: the exercises for instance must always reflect a clearly defined attainment target. Others, however, will be determined by the particular nature of the material you produce. If you have decided to present exercises in the textbook and have rejected the idea of producing expendable materials such as separate exercise books or cards, one criteria of your exercises will refer to the mechanism: you must reject out of hand all exercises requiring the children to stick things in, fill in gaps, join up, colour in or circle anything - a criteria which sometimes causes authors in developing countries enormous headaches as you will appreciate in the course of your work.

We look in more detail below at the general criteria that should be taken into account for primary-level textbooks in developing countries; as you will realise the list is by no means exhaustive and not all points will be relevant in every set of circumstances.

Examine them, adapt them as well as possible to suit the cultural, linguistic, pedagogical and didactic features which you must respect in your textbook, and supplement them as necessary.

27. Linguistic Checklist for a Manuscript in a National Language
In view of the fact that textbooks venture out into the world beyond the school yard, they can be deemed to play a primordial role in the normalisation and standardisation of national languages. The authors must thus help create a coherent, homogeneous and dynamic linguistic environment. Some of you will be able to consult a language planning institute or the linguistics faculty of a university[12] while others will have to solve the problems they encounter alone. In either case you should pay particular attention to the following aspects.
Spelling
Without a solid spelling system there can be no proper readability: the human eye which can easily memorise the contours of words stumbles over words written in diverse fashions with no rhyme or reason, and the reader is unsettled, particularly if he is only a beginner. It is thus important to read and re-read your manuscript, and to have it read by others to ensure uniformity. You will always come up against awkward cases, which cannot be solved with the help of your reference tools (at best a dictionary and a grammar book) alone. Ensure that the two following aspects at least are standardised:
Separation Check the criteria for separating elements, particularly in nouns and composite verbs, and ensure that you have used hyphens and apostrophes consistently throughout. If you intend using justified type, in columns, decide at this stage what criteria are to be applied to hyphenation and ensure that these are strictly applied.
Borrowed words National languages always borrow words from the European language with which they come into contact. In general, there is no homogeneous rule for writing these words: uncertainty rules as to whether to take the original spelling or whether to adapt it more or less to fit the phonology and spelling system of the national language. Although it is not your profession to establish spelling standards, it is up to you to make the language first and foremost a valuable learning medium, by observing strict and consistent rules regarding the form of borrowed words, verifying that these are in line with official norms where any exist and that these forms are acceptable to the users of the national language, in particular to teachers.
Inventing Words
National languages almost always have a vocabulary that is too limited to meet all cultural and technical requirements. You may thus be forced to invent some words, either resorting to borrowing the term from the former colonial language and adapting it, or neologising, i.e. creating a new term from the roots of the national language itself. Although the process of creating technical terms is considered obligatory, positive and quite normal in strong languages, it often appears artificial in national languages. The readability of texts, particularly those which describe modern technologies (user's manuals, recipes, etc.) may suffer two weaknesses: newly created words may appear clumsy, and may not be accepted immediately by the reader, or the texts may be too liberally scattered with new, unfamiliar words. It is a good idea then to make a list of these words, to check that they do not already exist in another form, to check that they are correct by circulating the manuscript to have it read and to limit the number of these words used.

Official Language and Variants
Most national languages exist in regional and local variations alongside the one variant that is recognised as more or less official. This situation has repercussions on textbooks since authors are torn between the need to normalise and standardise the language, which means making linguistic choices which will be binding for all users, and the needs of users who may reject the book if they cannot identify sufficiently with the language used. This is an extremely delicate issue and we can only urge you to be vigilant; list words of limited usage, ask the people who re-read your manuscript for their opinion and be sensitive to the positive and negative feed-back.
Punctuation
Punctuation is a relatively recent development, it is true, but it is now an integral part of written language. What we often forget, however, is that each language has its own punctuation rules. Few national languages have their own punctuation rules with the frequent result that authors apply the code of the former colonial language which they themselves learned at school; they only realise this at a later date when the punctuation rules that they know and that are appropriate for the European language in question causes dissonance in the national language. Before punctuation rules can be formulated in-depth linguistic studies are needed, which cannot be the task of textbook authors. Once again, we can only urge you to be vigilant: firstly do not create rules which are unnecessarily at odds with those of the second language which the children will have to learn later; secondly bear in mind the fact that it is easier to create rules of usage than to modify them later, and thirdly beware of any uses which create vague feelings of unease; solve the problems as best you can and then apply the punctuation you have created uniformly since textbooks are a powerful force in standardising a language.
Spoken and Written Languages
National languages tend to be primarily spoken languages. You should complete your linguistic checks by analysing the level of language of your manuscript. See in particular whether the circular logic which is characteristic of oral discourse has been satisfactorily replaced by the linear logic common to written language. Once again, there is no simple solution, and no standard advice except to keep your ears and eyes open to the reactions of the individuals outside your group who re-read your manuscript.

Attainment Sub-Targets

The first criteria of an exercise is that it correspond to a precise attainment target. Even if you identified learning steps during the conceptual stage, you will now see that these are too vague to be directly translated into exercises.

To allow you to work properly, you will thus need to break down the general attainment target into a number of sub-targets. To this end you will bring together the basic structure, which stipulates how many exercises are planned per unit, and the sub-targets, which you should list by priority, thus ensuring that the most important are tackled in the exercises.

Let us look at one example, to give you an idea of the practical significance of this recommendation. Let us assume that the general learning objective for writing has been defined in the following terms. “The pupil should be able to copy short texts legibly and correctly from a model in joined-up writing, and should understand the meaning.” You should firstly identify the sub-targets regarding handwriting and those concerning written expression. For handwriting, you could identify the following sub-targets:

• Produce the round part of letters such as **a** or **g** with an anti-clockwise movement;

• Produce the ascenders in letters such as **b** or **h** and the descenders in **g** or **p** on the correct scale;

• Join up the letters within a word correctly

• Leave the space required between words and so on.

Having listed the sub-targets you should decide which ones are indispensable, and list those which could be considered part of the basic structure.

Identify the sub-targets for written comprehension in the same way.

Mechanisms and Presentation

The results of the last step should now allow you to begin devising the exercises. But, you may well ask, where do I start?

Your first task should be to identify a general direction for the first attainment sub-targets. If you already have some experience in this field you will be able to sketch these out fairly rapidly, and these will become exercises little by little. If, on the other hand, you are new to this work, and feel quite out of your depth we suggest that you look at the sort of exercises printed in recent textbooks. But be careful - you must not under any circumstances copy these exercises. Take them as a starting point by all means, add to them, change them, make them more detailed, so that they fit the bill for your specific situation and the language you are working in.

In either case though, do not simply accept the first mechanism that comes to you. Try to improve on this and keep all your drafts. They may be useful later, especially when you do the layout.

Devising Model Exercises

The activities outlined above should allow you to go on to devise the exercises for your first unit, which will give you a frame of reference for the rest of the book.

As you saw when you came to write the texts, you should adopt a three-step approach here. Firstly check how much space has been allowed for each exercise in the basic structure. Secondly look at your draft exercises and select those which best correspond to the principal criteria we looked at earlier. Thirdly either prepare sample pages in the same format as the book, or give the exercises to the publishing unit and let it do this where the exercises are longer. Sketch in the illustrations. Either way, this first unit will allow you to judge the average length of the exercises.

Step by step with the help of sketches, drafts and numerous new starts the exercises will begin to take shape

An exercise must meet a number of primarily pedagogical and didactic criteria

The exercises must also meet certain aesthetic criteria

28. Criteria for Developing Writing Exercises
Exercises must correspond to a detailed attainment target
This is the starting point for each exercise: every exercise must reflect a specific attainment target. An analysis of school textbooks shows how difficult it is to achieve this. The sole purpose of some exercises appears to be to balance a page aesthetically. Frequently they do not properly reflect the target set, and sometimes they tacitly reflect other targets.
Coherent sequence
Exercises must follow on, one from the other, in a logical sequence to allow a logical progression of new elements to be learned.
Adaptation to working conditions
The exercises must be in line with the working conditions found during the preliminary investigations, in particular as regards the time-table followed by the majority of the pupils, the average class size and the instruments available in most schools.
Ensuring optimum impact

Exercises should illustrate the phenomenon to be taught in an optimum way; it is thus important to identify not only the subject matter, but also the mechanism and the presentation best suited to enable pupils to achieve the target.
Mechanism that is easily understood by the teacher
The mechanism of the exercise should be immediately accessible to the teacher; explanations and information should not be needed to inform the teacher in detail about the mechanism, but merely to confirm what he has instinctively understood. This means that innovation must be kept within limits. If a book involves too many innovations there is a chance that teachers will not understand the exercise and will thus reject it, or that they will misunderstand it and use it incorrectly.[13]
Mechanism that pupils can follow
The exercises must be in line with the level of maturity and knowledge of the pupils; thus exercises that are too easy or too complex must be rejected, as must those that would require too many explanations on the part of the teacher. Appropriate exercise types should be identified and repeated several times, perhaps with slight variations to avoid pupils wasting too much time and energy understanding the mechanism.
Games aspect
The exercises must meet the demands of the subject matter in question, and be tailored to the target group; if the latter is made up of young children, they will learn more rapidly and easily if the exercises have the appearance of a game.
Harmony of exercise-image entity
The presentation of the exercises and any illustrations must form a harmonious whole with the content matter; the form must not only meet aesthetic requirements, but should also help pupils to understand the contents and/or the mechanism of the exercise.
Harmony of the double page
Not only must the exercises follow a logical sequence, they must be placed in a harmonious fashion on each double page. For young pupils, for instance, care should be taken that the exercises which comprise only text alternate with text illustrations to make the pages "airy" enough.
Professional aspect
The presentation of exercises will implicitly convince readers of the professionalism of the team of authors. Sometimes we forget that certain graphic aspects of the book, including the presentation of exercises can be decisive for decision-makers who cannot necessarily judge other aspects of the book. Thus exercises that are too "home-made" in appearance should be abandoned and replaced with more sophisticated presentations.

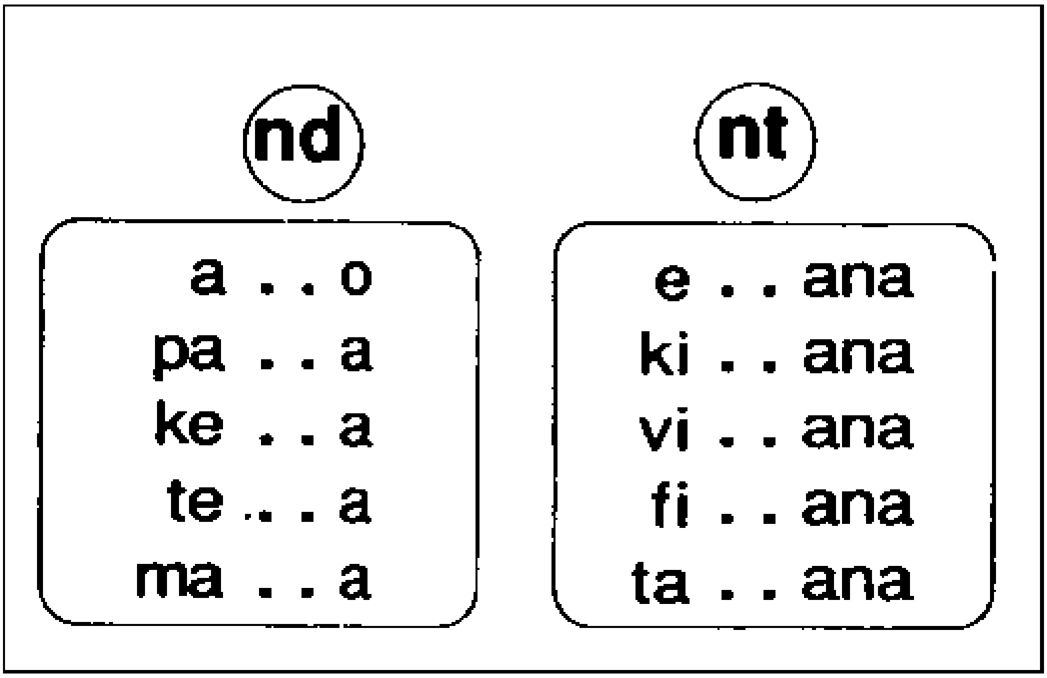

Example of function exercises
Transparency of mechanism: making and copying words (Tongavola p. 81)

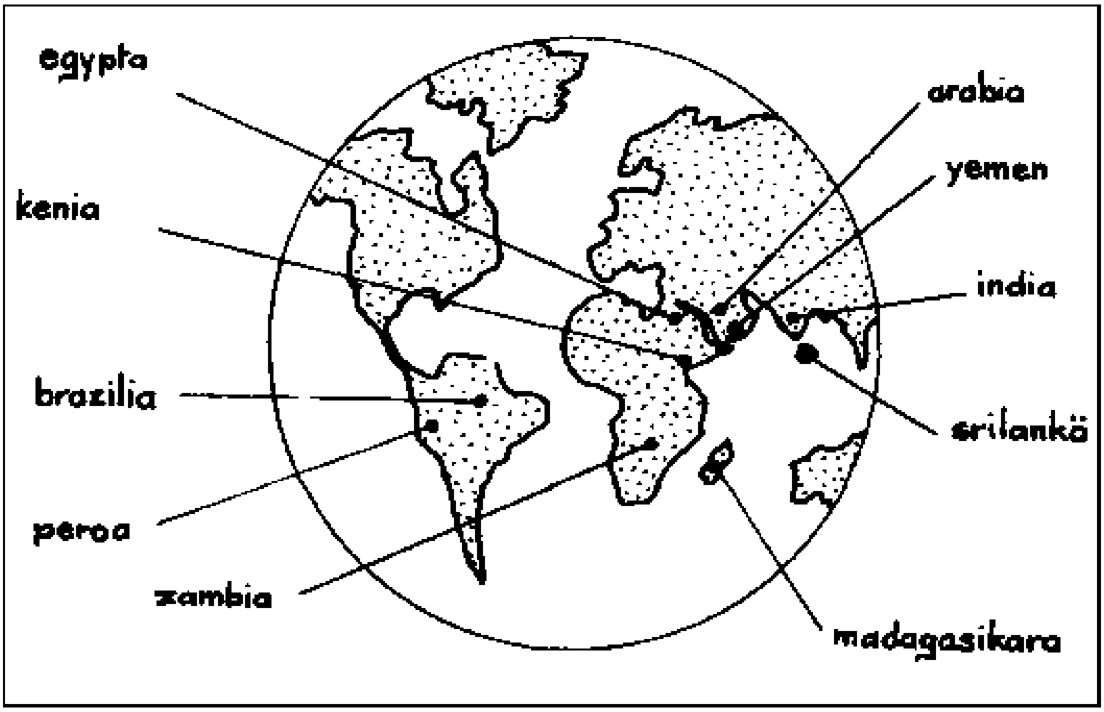

Example of presentation of content matter
World map to illustrate the use of capitals (Rosovola, p. 78)

As you will have realised, once again the form and the content matter go hand in hand. Take care to select a form which is both functional and aesthetic; the form must allow you to present the mechanism of the exercise visually or to illustrate the content. Here is an example of two exercises where the form is a good illustration of the content matter.

Designing the Other Exercises

You should be able to design the other exercises without too many difficulties now, although this is not always the case. During this phase, authors often encounter obstacles in terms of the mechanism, the contents or the presentation, which force them to make modifications. Let us assume, for instance, that the planned mechanism does not allow us to illustrate a phenomenon well: you will change it, of course, but this change may trigger a whole chain of repercussions.

You should not then be unduly surprised if you have to resume your work a hundred and one times before you have a final layout: this is more likely to be a sign of the quality of your work than a reflection of mediocrity.

Internal Checks

Designing exercises is almost always a long and extremely arduous task. Once you have completed your first version, try to stand back and run a series of internal checks. We suggest that you pay particular attention to the following aspects.

Subject Matter Check

Check that the exercises do not contain any errors! Force yourself to sit down and do them in their entirety, and if you intend to print the answers in the book or later in the teachers' guide make sure they are correct. These will be the errors that will leap out at every reader later, without their having to go through your product with a fine-tooth comb.

Pedagogical and Didactic Check

Check and see that the natural progression of learning has been respected; sometimes changes are made with the result that the exercises no longer correspond to the original sequence.

Once you have completed these internal checks, you can submit the manuscript to your external correctors. Prepare the manuscript and identify appropriate proof readers.

Graphic Check

Start by looking at the length of each exercise one at a time; make sure that the instructions are not longer than the shortest exercise. If necessary lengthen the exercise - three or four words do not count as a proper exercise! Thin out exercises where the sheer length is off-putting.

Ensure that there is a balance between the form and the content matter: modify exercises that take up too much space for a limited subject matter, for instance.

Secondly, look at the harmony of the individual page and the double page. In books for the first few grades, you should pay particular attention to alternating exercises with examples or special presentations (words in a box, or a circle, for instance). You should always ensure a balance between the exercises on facing pages.

> **Undertake to excel in all aspects of the exercises, correct them, polish them, re-write them entirely if necessary until you are completely satisfied**
>
> **No three-word exercises and no “essays” of instructions that are twice as long as the exercises**

Publishing Considerations

At this level, you can record in detail the illustrations, writing and layout for the exercises.

Look first at the number, contents and dimensions of text illustrations or other illustrations to be produced by an illustrator. You should also plan the volume of text to be written in cursive style: if you do not have a computer programme which can reproduce italics, some of which are in any case unsatisfactory, and all of which are costly, you will have to have these parts written by hand. In some countries this is the work of professionals.

Finally, you should check the complexity of the presentation of exercises and ensure that the publishing unit can reproduce the layout you have planned.

5. External Checks

You have produced the pages of text for the pupils, i.e. you have written the texts and sketched the illustrations, and you have produced the exercises, i.e. you have written them and decided on the presentation, and you are doubtless impatient to “see” the textbook, with the finished illustrations and the text printed on a word processor.

But let's not jump the gun. After all the months of working in a vacuum, you no longer have the distance to your product to undertake the final revision, which is so vital. And you have been cut off from the outside world for too long. You can overcome this dual problem, however, by getting experts from outside the group to read your manuscript: this will allow you to check the quality one last time, and to inform the education authorities of the status of your work and start paving the way to ensure that your finished work is well received.

One way to do so is to follow the approach outlined below.

Preparing the Manuscript

Revise your manuscript once again, check that all your changes have been incorporated and that it can be read profitably and without any major difficulty by individuals without publishing experience. Remember that the unfinished nature of the manuscript may unsettle some readers who will then focus all their attention on shortcomings in terms of the form.

Proof Readers

Once your manuscript is ready, identify individuals whose skills and authority make them appropriate proof readers. Select proof readers who can make valuable comments now and can help ensure that your book is well received later; the following people would be suitable.

Subject Specialists

Good specialists in the subject in question, from universities or the ministry will be able to give a well-founded assessment of your work, and identify any fundamental errors which other proof readers will probably not notice.

Education Authorities

Identify the education authorities whose support might be important when the book is introduced in schools and involve them in the production of the book by asking them to make their comments which can still be taken into account if they are pertinent.

Animateurs in Rural Areas

Make a special effort to gain the support of animateurs in the test zone; given their excellent knowledge of the area and their training, they are often best placed to assess whether or not the material is appropriate for the normal teaching and learning conditions. If possible try to reserve several days to re-read the manuscript in their company.

You should also bear in mind that the same animateurs will be responsible for supervising teachers in the test schools during the test phase, and that as such they should be involved in the process of producing a book which they will have to explain and perhaps defend.

Teachers

If you have produced a pilot book, you will plan to run a test in a sample of schools and then evaluate the results of this test phase. It is thus in your own interest to involve the teachers concerned in the production of the materials, by asking them for their opinion of the manuscript. Often it is not so much their comments per se which will be important, but the chance they are given to identify with the materials they will later be expected to use. This identification is crucial for the adoption of the material.

Parents

If you have produced a textbook in a national language, especially if it is a reading book, we recommend that you submit a copy to parents; this will often involve reading them entire passages.

This will have two major advantages for you. Firstly, parents' comments may make for a greater richness and authenticity of the texts[14], particularly if you have distanced yourself from your native tongue and no longer speak it with total ease. Secondly, these information and sensitisation activities will often assure you of the interest and even the support of parents for your activities.

Groups of Children

It can be very interesting to have the manuscript read informally by children of the same age as the target group for which you have just produced the book. These children may be a source of important information, as regards in particular the complexity of the texts and their interests.

Reading Documents

To avoid generating too much confusion on the part of the proof readers who are not accustomed to re-reading manuscripts, you must inform them about your work and stipulate exactly what they are expected to do.

If you have time, you should then draw up two documents: specifications, identical for all proof readers which give a short presentation of the contents and the main physical and graphic features of the book, and an individual list of instructions, specifying the points you would like the individual readers to comment on, in the form of either a list of points to be examined carefully, or a series of detailed questions.

Logistics

If you wish all your efforts to bear fruit you cannot sit back yet. If possible contact your proof readers personally, ensure that they agree to help and define the terms of cooperation, in particular the time they have to read their copy of the manuscript and the date planned for pooling results. Stress that you are interested in constructive criticism rather than unfounded praise.

This phase, which in large publishing companies is the responsibility of the publisher, can mean a great deal of extra work for textbook authors in developing countries; sometimes you may have to undertake several trips into the field, organise trips to the main district towns, plan and chair meetings to pool results, etc.[15]. But, given what is at stake, we recommend that you plan and execute this work with the rigour which you have adopted throughout.

Think of organising proof readers as a mini-project in its own right

6. Writing the General Information Pages

After this phase of contact with the outside world you will have to return to your garret to finalise the manuscript.

You still have to write the general information parts, which generally make up the first few pages of the book and those found on the front and back cover. Pay attention to the following aspects.

First Pages

The first few pages contain the information which we looked at in more detail in the chapter on the concept of the physical and graphic aspects of the textbook.

> **Don't relax once the pupils' texts are finished - you still have to write the general parts of the book**

Write these parts carefully, because they will be a visiting card of sorts for the entire book. These are the parts that will be examined first by all adults interested in your book.

Try to avoid any errors, such as incorrect page numbers in the table of contents, or omissions which will irritate the reader: you should always give the date and place of publishing for instance. And you should exercise great care when you write these texts so that the official information (a foreword signed by the minister for instance) is every bit as convincing as the more technical parts (a presentation of the contents to allow readers to use the book without the teachers' guide if necessary).

And one last recommendation is surely important: do not underestimate the importance of the table of contents. It is not enough to list the units and give the page numbers; give a brief overview of the contents of each unit so that the table of contents is a genuine reference tool for the reader, and, when the layout is performed devote an appropriate length of time to this issue, to find a presentation worthy of your book.

The Cover

Take care also with the text which will be printed on the cover. The two outside cover pages address the purchaser, so give him the information he needs: print the ministry of education's name on the front cover, or at least the name of the publisher, the title, a description of the contents (e.g. reading book with exercises) and the grade for which it is designed. On the back cover you can, if appropriate list the other books in the series and announce the forthcoming titles. The two pages inside the cover should be left blank if possible. Think of the first as an invitation to the reader to concentrate, and the last as a visual curtain closing on the book, which makes white the most appropriate colour. If you are forced by financial constraints to use these pages, leave as much blank page as possible[16].

7. In Conclusion

The End of the Writing Phase

At the end of this phase, nothing is yet definitive. Your manuscript has undergone a first external check, but you can still modify it, add elements and remove others without losing time or entailing any extra costs.

If you need the authorisation of the education authorities to print your book, this is the time to submit the manuscript to them: you can still make any modifications at this stage. Later your choices will be more or less irreversible and any modifications that can still be made will be long, difficult and costly.

Check the procedures for printing your textbook at the end of this phase, and act accordingly before having the typesetting, layout and illustration work done.

Notes

[1] In: *Conception et production des manuels scolaires,* op. cit, p. 88 (in inverted commas in original text.)

[2] We look at the illustrations in more detail in the next chapter; whenever the time schedule allows, it is preferable for the illustrator to start work when the precise format and place of the illustrations has been determined. It is up to you to decide whether or not you have time to proceed in this exemplary fashion.

[3] These criteria, which were initially drawn up to help identify key words in Quechua, can certainly be used as a reference for other languages. Cf. Châtry-Komarek, M. *Libros de lectura para niños de lengua vernácula.* Eschborn: GTZ, 1987.

[4] “You argue, and we attempt to convince”, as one of the Tef'Boky authors summed up the difficulties of translating a French text with a linear structure into Malagasy for primary school teachers. Antananarivo, June 1990.

[5] These criteria were systematically applied to the reading books produced for the first two years of primary schools in Madagascar, *Garabola* and *Tongavola.*

[6] Many studies have been conducted on the controlled use of words in reading books for primary level: we would refer you, for instance, to McCullough, C. and Chacko. C. In: “Developing Materials for Instruction, In: Staiger, R.C. (Ed.) *The teaching of reading.* UNESCO/Ginn, Paris: Lexington, 1973.

[7] Here is one example, to demonstrate how important this is. In Malagasy, the negation “tsy” (“not”) does not figure in the first reading book, because it includes the complex grapheme **ts** which is incorporated in the systematic learning programme for the second year. This linguistic restriction proved to be the most irritating when the texts were being written for *Garabola.*

[8] This point is explained in more detail in this chapter in Table 27.

[9] Non-school education must be one of the considerations of authors of textbooks for the lower classes at primary level. See Hummel, C. *School textbooks and lifelong education: an analysis of schoolbooks from three countries.* Hamburg: UNESCO Institute for Education, 1988.

[10] A valuable book to read in this regard is Berthelot, J. *Petit guide a l'intention d'auteurs débutants et de quelques autres,* op. cit. pp. 59-69.

[11] Cf. Huot *Dans la jungle des manuels scolaires,* op. cit. p. 79.

[12] The modernisation of national languages is a long, complex process, which is rarely crowned with success; textbook authors, who may be the first to express an interest in this subject, are sometimes unaware even of the existence of a language planning agency. See also “Textbook writers and language planning”. In Rubins, J. (Ed.) *Language planning processes.* The Hague: Mouton Publishers, 1977.

[13] All innovations must be recognised as such, even where you consider the new methods obvious and incapable of being misunderstood. We will just recount the example of one teacher who was given an exercise book for writing for primary one - something completely new to hear; the letter to be taught was presented in dots to allow pupils to practice by joining up the dots. For several months she taught her pupils to write letters in dots.

[14] Textbook authors are often bilingual, but having undergone their education in a European language they have sometimes lost touch with their native tongue. If this applies to you do try to re-read your manuscript with groups of parents. They are an excellent source of lexical and syntactic information.

[15] When the author is responsible for organising the proofreading phase, this work is almost always a veritable mini project, whatever the type of publication in question. The organisation involved in having this book proof read is a case in point; it was extremely time-consuming and took an enormous amount of energy.

[16] For instance print the colophon, indicating the month and year and the authorised supplier.

Suggested Reading

Readability

DE LANDSHEERE, G. *Le test de closure.* Paris: Nathan, 1973

FLESH, R. How *to test readability.* New York: Harper and Row, 1942

HENRY, G. *Comment mesurer la lisibilité.* Paris: Nathan, 1975

RICHAUDEAU, F. *Le langage efficace.* Paris: Retz, 1973

Creating Technical Terms

CALVET, L.J. *La guerre des langues et les politiques linguistiques.* Paris: Payot, 1987

CHATRY-KOMAREK, M. Intentos de codificación del quechua en libros escolares. In:

LOPEZ, L.E. AND MOYA, R. (Ed.) *Pueblos indios, estados y educación.* Lima, 1989

CLAS, A. *Guide de recherche en lexicographie et terminologie.* Paris: ACCT, 1985

RUBIN, J. et al *Language planning processes.* The Hague: Mouton, 1977

UNESCO *L'emploi des langues vernaculaires dans l'enseignement.* Paris, 1953

To Sum Up

The systematic concept drawn up for the contents and the physical and graphic aspects of the textbook allows the authors to move smoothly into the actual writing phase.

Among the many tasks of textbook authors, this is often the one they feel least apprehensive about, especially if they have been selected on the basis of their writing skills. This confidence is, however, often based on a misapprehension. Although the writing of texts and exercises is important, writing a textbook is not a purely literary pursuit; it must be accompanied by graphic considerations. It is important to deal with the form and the contents of each page together, such that the products of this phase are not merely texts and exercises, but an entity of words and images linked so coherently that we can speak of a “text-image unit”.

We feel that three points are important to finish off this work, although the complexity of these tasks is often under-estimated. Firstly, a frame of reference and working conditions are needed which give free reign to the literary and artistic talents of authors. Secondly, certain procedures must become automatic, such as checking the position, length, presentation and accompanying illustrations for each piece written. Thirdly, a systematic approach should be taken to writing the texts and devising exercises, involving the following steps: drawing up a list of criteria, producing a model unit, doing the provisional layout, writing the other texts and exercises, performing an internal check, and identifying a group of external proof readers to re-read the manuscript one last time and make their comments.

At the end of this phase it is absolutely imperative that all authors' corrections be completed. This is why we recommend that all teams who must obtain the authorisation of the education authorities before printing their material submit their work at this stage, so that the latter has a chance of suggesting modifications which the authors can incorporate without entailing additional costs or losing time.

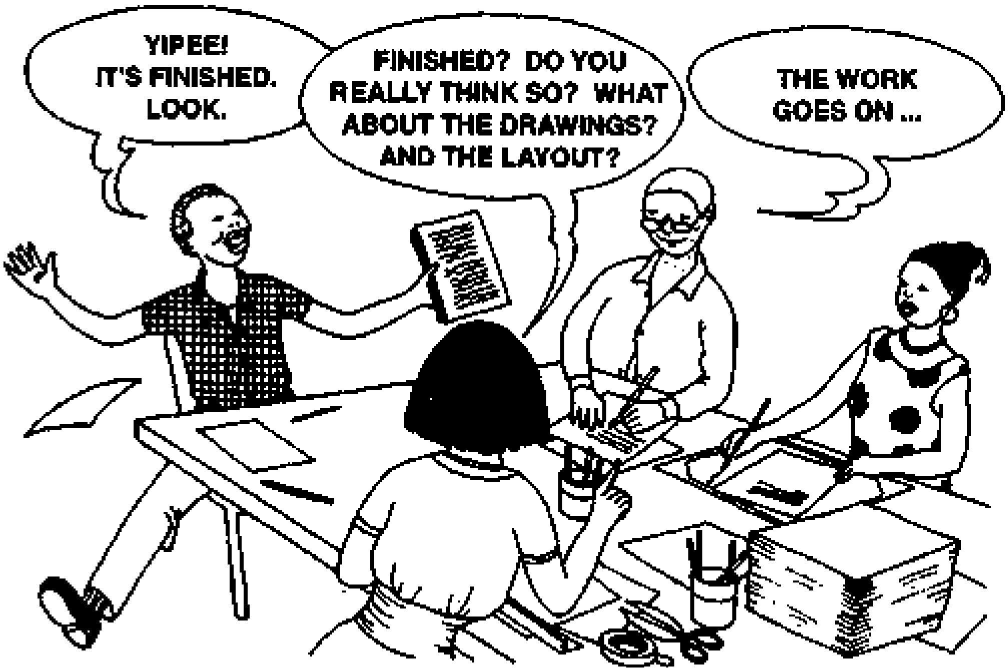

Preparatory Chain

Until now you have focused on both the development of the contents and the development of the graphic design, which has allowed you to produce the texts and the sketches for accompanying illustrations. At this stage you must put them both into their final form.

In large publishing companies this work would be split among several people: illustrators and photographers would complete the illustrations on the basis of the sketches, or sometimes just on the basis of the author's instructions; then, ideally a graphic artist would decide which typeface should be used for the texts which will be typeset by computer; finally a layout man would produce the layout. All these tasks would be organised and supervised by the Art Director.

In developing countries, the authors themselves generally plan, define and supervise the illustration and layout work. In this chapter you will find a presentation of the work involved, which we hope will be interesting for all of you. You should, however, realise that if you have no training in graphic art, this chapter alone will not enable you to solve all the problems you are bound to encounter.

Try to get some professional back-up, and, whether or not you are successful, make an effort to become familiar with the basic principles of graphic art; read this chapter carefully, consult the books listed at the end and examine the illustrations and layout of recently published textbooks.

A finished manuscript is still far from being a printed book
It's an uphill struggle from the manuscript to the imposition scheme

1. Overview

The preparatory chain involves all operations leading from the manuscript to giving the printer the go-ahead. This authorisation is noted on the final set of proofs, the blueprint, indicating that no more changes will be made and thus giving the printer the go-ahead.

This phase is long and complex, much more so than many authors realise, believing as they do that a completed manuscript is more or less a printed book. To give you an idea of the nature, scope and sequence of the tasks involved, we will proceed as always, starting with an overview. Once again we will take the example of the procedure followed in the Tef'Boky Project, which is laid out in Table 29.

The various tasks we describe here do not differ significantly from those found within large publishers, of course, but some of the steps taken by the project in an attempt to avoid the major pitfalls that beset the production of textbooks in developing countries may be instructive for teams without much publishing experience and for teams only able to ensure sporadic monitoring of the printing work.

29. An Example of the Chain: Garabola
Illustration work
The illustration work, which commenced during the writing phase, continued parallel to the layout work. Little by little ink drawing replaced the sketches. The exercises which needed careful placing of text illustrations and text were illustrated once the layout was complete, and the letters, words and sentences to be written in cursive style were added last. Generally the illustration work was never finished until the job envelope is handed over to the printer.
Stipulating the final layout
The format of the book and the basic visual structure had been clear for several months; it was time to decide on the final layout; firstly the stencil was defined, i.e.

	the precise frame within which the text and illustration blocks were to be arranged; secondly the typographic characteristics of the text were determined. The manuscript was coded to ensure that all instructions were clear to the photocompositor.
Typesetting the text and correcting proofs	
	The texts and exercises in the manuscript still had to be typeset by computer. Given the shortness of the text and the complexity of the layout, no running text was produced; it was broken down immediately into its final form. The proofs thus obtained were examined by each of the authors. This was a time-consuming task: firstly the authors were not professional proof readers and had to learn to track down errors; and since the Malagasy language is still undergoing standardisation, they had to check that standard linguistic criteria had been applied throughout (regarding newly created words, spelling and punctuation in particular).
Preparation of a pasteup guide	
	The authors prepared a pasteup guide to be used as a model for the assembler. This is a more detailed version of the layout plan, in which every page is prepared on the basis of a photocopy of the texts and the illustrations. This model was extremely useful and made up to some extent for the absence of professional proof readers and layout men. It revealed the more serious graphic errors, forced the authors to correct some pages or reconsider certain typographic decisions; it also allowed them to identify the odd punctuation or spelling error, and correct it.
Pinboards	
	Gradually, as the pages of the pasteup guide were finished they were stuck up on a pin board, until the entire book including the cover pages had been pinned up, double page by double page. This method had the advantage of giving a permanent overview of progress; the authors could find the pages which had not yet been put into their final form and the illustrations that were missing, and were also able to pick up that one last mistake which had slipped through the individual checks, or something in the layout which had to be modified.
Shading	
	For financial reasons the interior of the reading and writing books produced in the Tef'Boky Project was printed in monochrome. The authors shaded the accompanying illustrations in three shades of grey; this gave depth to the pictures and marked the difference between reading and exercise pages, which have no shading. The authors themselves indicated how the shading was to be done on photocopies of the originals.
Preparing the job envelope	
	The authors then prepared a job envelope for the printer. For every page of the textbook they prepared one large envelope containing four documents: the final version of the corrected text with layout, the corresponding original drawings, a photocopy of these drawings with shading instructions and the page layout, as a reference for the assembler. These precautions were felt to be necessary as a result of the poor communications with the printer, and because the authors were called away to other tasks almost as soon as the job envelope had been submitted to the printer.
Checking the blueprint	
	In spite of the measures described above the authors asked the printer to prepare one last set of proofs, the blueprint. They checked these, ensuring not only that the montage was correct, but also that there were no omissions[1] or changes[2], before giving the printer the go-ahead for each page. Let us specify that after this the authors were only involved in very sporadic monitoring; even this, however, allowed them to pinpoint and remedy some errors which they never dreamt could happen.[3]

As you will see, the work is long and relatively complex, and, in most cases, it is your team which will be in charge.

To help you understand the sequence better, Table 30 lists the tasks for which Garabola authors were responsible, broken down into those which they performed themselves and those which they only had to organise and supervise. Take a good look at this table and see what you can expect.

30. The Authors' Responsibility		
No.	**Performed by Authors**	**Organised and Monitored by Authors**
1		Finishing illustration work
2	Final check of illustration work	
3	Putting together the stencil	
4	Identifying typeface	
5	Preparing the manuscript for typesetting	
6		Typesetting text on a computer
7	Proofreading	
8	Preparing a provisional layout plan for the printer's assembler	
9	Mounting the make-up on a board and checking texts and layout systematically	
10	Instructing the printer about shading	
11	Preparing the job envelope, with one envelope per page of the textbook, containing all the pertinent documents	
12	Instructing the printer, submitting the job envelope and set-off sheet	
13		Providing the printer with imported inputs
14		Monitoring the progress of work from assembly to printing
15	Checking assembly on the basis of the blueprints	
16		Checking printing quality
17		Checking quality of finishing

2. Illustrations

Now you have an idea of the various steps leading up to the printer receiving a go-ahead, let us go back to stage one.

The illustrations will often be noticed first; make sure they are appropriate

The objective is to have the illustrations that you devised and possibly sketched during the writing phase completed. These may be photographs or drawings, which will then be printed in one or more colours. Within the scope of this publication, for the reasons given in the introduction, we do not propose to go into the technicalities of 4-colour printing, focusing on representational drawings in one colour, with shading or without, and in two colours.

All teams of authors must work with the illustrator, but their specific tasks will not always be the same. In large publishing houses the authors will give the illustrator instructions as to the illustrations that are to accompany the text, and, for technical drawings they may compile a dossier of basic information. In developing countries on the other hand the authors are often in charge of all graphic work.

If you find yourself in this position, here are the steps you will generally have to take.

Drawing up a Contract

As we pointed out at the end of chapter 5 you should have sounded out the illustrator during the conceptual phase. You will have selected the artist whose skills and attitudes are best suited to the job in hand. When he reappears on the scene, which will not generally be before the texts have been completed, your first task will be to draw up a contract. Generally artists work as free-lancers, and prefer to be paid by the unit, depending on the type and dimensions of the illustrations to be produced.

Most of you will not have to deal with the legal and financial aspects of a contract of this sort, since it is unusual for the authors of a book to be responsible for the financial side[4]. But you will almost certainly be consulted to ensure that the contract reflects the services actually required; you should proceed as follows.

General Presentation of the Textbook

Start by giving a thumbnail sketch of the textbook; inform the illustrator of which grade and subject it addresses, the format and the number of pages, the subject matter covered, the fundamental visual structure, etc.

Type and Number of Illustrations

You should then list the main technical features of the illustrations.

First of all, stipulate what type of illustrations are required: perhaps realistic scenes from everyday life, to be drawn in ink with shading which will later be screened and printed in two colours, or text illustrations accompanying the exercises, or models for writing lessons, to be copied in pen. Go through the book page by page with the illustrator and make as detailed a list as possible of the number and format of the drawings to be produced. This will be used as a basis for determining the illustrator's fee.

> **A carefully drawn up contract that is respected by both sides ensures good cooperation with the illustrator**

The Tasks of Those Concerned

Stipulate the respective tasks of the authors and the illustrator at this stage.

At the outset it is essential that the illustrator appreciates that he must put his skills at the service of pedagogical and didactic criteria. He has not been contracted to “express himself” but to translate into images the more or less precise instructions you give him.

You should thus explain to him that together you will produce illustrations which best correspond to the visual decoding ability of the children in question. They must be in line with the average age of the children, with their degree of familiarity with printed materials and with the socio-cultural features of their immediate environment. It is up to you to decide, for example, if you feel it appropriate only to depict people in their entirety, to use unusual perspectives or to resort to caricatures - but the illustration work must always be based on an agreement in principle with the illustrator who is about to join your team. You are thus very much in charge of the illustration work, while the illustrator works within a pre-determined, limited framework and needs the transparency and complementarity of a genuine working group.

This has two important consequences: firstly you will have to determine all the features of the illustrations, and secondly the illustrator must agree to redo illustrations which do not correspond to your instructions. Make this point quite clear at the start to avoid working with artists who have not been properly informed about the working conditions and are too full of themselves or unable to knuckle down to the quality and time requirements found in the world of textbook production.

Finally, if you plan to print your textbook in two colours, you must decide who is going to be responsible for preparing the half-tones - you or the illustrator.

> **Many of you will be responsible for the entire preparatory chain**

Methods and Steps

Now you have established the general framework of collaboration you can move on to the details of your work with the illustrator.

Firstly, you should decide where he is to work. If conditions permit, put him in the same rooms where you meet; this is the best way to ensure smooth and rapid progress. Secondly, decide what tools he will require, which of these your organisation already has and which you will have to provide him with. Finally, determine the various steps to be undertaken from the first sketches to the final version of the illustrations: nothing is more demoralising for everybody concerned than having to redo or have someone else redo a drawing which has already been completed in ink because the original specifications were not clear.

To ensure that deadlines are respected, you too should make changes only to the drafts and agree at the outset on the number of finished drawing which can be revised without incurring any extra costs.

Deadlines

Set a deadline for the submission of all original drawings and draw up a contract which covers all the points we have touched on.

Graphic Criteria

Once the illustrator has agreed to the terms and conditions, and has signed the contract you can start the illustration work per se, firstly drawing up a list of criteria to be respected.

Never under-estimate the power of the image. Remember that even if the texts in a book can capture the interest of an attentive reader, images do not need his attention or even his interest. They appeal directly to him, triggering an emotive response - attraction or rejection. Take great care then to draw up as precise as possible a list of criteria which will allow you to identify which elements should be given precedence and which should be ruled out to avoid the risk that the textbook will be rejected by readers.

In Table 31 you will find some of the general criteria which guided the illustration of the reading and writing books produced in the Tef'Boky Project. We have only listed the criteria we felt were most interesting for textbook authors in developing countries; read them carefully and see which ones apply in your case.

Sometimes textbook illustrations must attempt to reconcile the irreconcilable

Do not wait passively for the illustrator to submit his drawings - you must guide him

When the authors of the Tef'Boky Project began to draw up a list of criteria for the illustration of their textbooks, they differentiated between criteria which they felt were of universal validity, such as the concordance of text elements and drawings, and those which they felt were specific to developing countries. As you no doubt noted in the Table 31, the latter criteria are particularly difficult to respect since they are always somewhere between two extremes.

31. Main Criteria Observed when Illustrating Garabola and Tongavola
Realism vs. Idealisation
The illustrations must reproduce actual everyday life, removing any element which could be construed as demeaning, i.e. the reality depicted should be idealised while remaining realistic enough for pupils to recognise it immediately and identify with it.
Precision vs. Generalisation
The illustrations must have a high level of precision and authenticity, allowing the reader to recognise beyond any shadow of a doubt everyday life on Madagascar (habitat, customs, countryside, dress, etc.). At the same time, however, they must abstract every element that is too closely linked to any one region, the objective being not that every

	pupil feels himself to be addressed directly, but that no pupils feel excluded by the life depicted. For Madagascar, for instance, no elements should be depicted which refer exclusively to either the coast or the high plateaux.
Traditional vs. Modern Elements	
	The illustrations must do justice to traditional instruments and work that are still in use, while adequately documenting the progressive introduction of new technologies; plastic and the radio have a legitimate place alongside dugout canoes and oxen-drawn carts.
Diversity of Visual Techniques	
	The visual techniques used must allow readers who have had little contact with printed materials to decode the illustrations without difficulty, but techniques should also be used which signal a certain leaning towards modernism and will familiarise pupils with graphic styles commonly used in industrialised countries. Thus, the perspective chosen should, for instance, be easy to decode, while making use of cartoon techniques to a certain extent (arbitrary cutting off of parts of the element shown, unusual perspectives, caricatures, etc.).
Humour and Criticism	
	Efforts should not necessarily be made to renounce humour and criticism, but you should avoid using elements which, although they may be widespread and generally accepted elsewhere are liable not to be understood or to be considered shocking in the context in question - e.g. the personification of animals, where extra care is needed. Care should also be taken that the reader, unaccustomed to a critical view of his environment, is not unsettled or insulted.
Childhood and Adulthood	
	Illustrations should be adapted to the children who the book addresses first and foremost; they should also be generally instructive and pertinent for children whose adult life often begins after barely two years schooling.

Identifying Scenes

Once the terms and conditions have been agreed on, and the criteria listed, you can go on to the next stage; starting to work in close cooperation with the illustrator.

To this end you should return to your texts and sketches, and examine them page by page. Start by arranging each drawing as exactly as possible on the page, and determining its dimensions. Then decide which elements must be depicted and which are at the heart of the text and must therefore be emphasised.

We recommend that you take seriously any reservations the illustrator may have. If he has major difficulties illustrating a particular text, look firstly for the reasons in your own work. See in particular if the text allows for an adequate degree of visualisation, and if it doesn't, rewrite it.

End this phase by ensuring that the illustrator has as precise a dossier of instructions as possible, in the form of notes or sketches, which will enable him to start work.

Correcting Drafts

Although illustrators generally go off by themselves initially to produce their first sketches and familiarise themselves with the book, it is important for them to re-establish contact with you rapidly. During this phase you should intervene at least twice in the following way.

Initial Instructions

To ensure that the illustrator is on the right lines, you must insist that he show you his first drafts. Examine them and let him know whether he can finalise these or whether he must take an entirely different approach. React quickly to avoid the illustrator continuing under false apprehensions.

Revision of the Final Drafts

The illustrator will often produce a series of drafts, which will become gradually more and more precise. The last of these drafts, which should be the more or less final version, must be examined in great detail: peruse them in the company of the illustrator to ensure that they are in line with pedagogical and didactic requirements and with the criteria you listed in advance. Specify any changes that will have to be made.

To give you a better understanding of your role as a supervisor of sorts during this phase look at the examples below; compare the pilot version with the corresponding pages of the revised version of *Garabola* and deduce the reasons for the modifications made in the interlude, indicated in the following figures by a circle.

You will have to make some corrections to the graphic artist's work

Examine each drawing carefully and be precise and consistent in your comments

Correct illustrations on the basis of precise pedagogical and didactic criteria

The illustration should help create a “text-image unit”

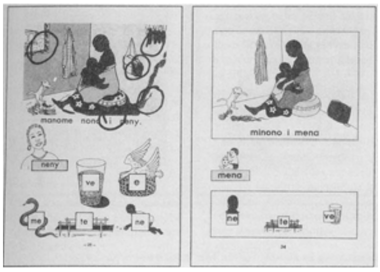

1. Remove secondary elements which obscure the relation between the text and the image.

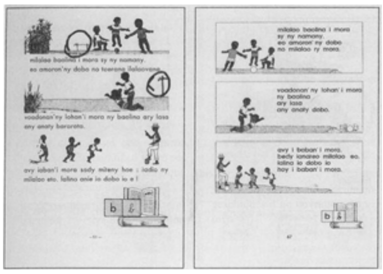

2. Remove any elements that are purely decorative.

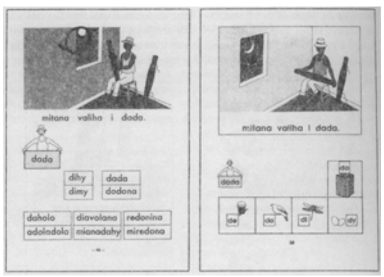

3. Select elements which make the object depicted as easily recognisable as possible.

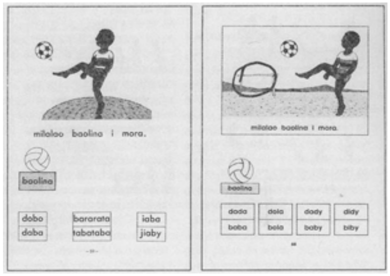

4. Add any elements that are essential to allow the reader to identify the scene.

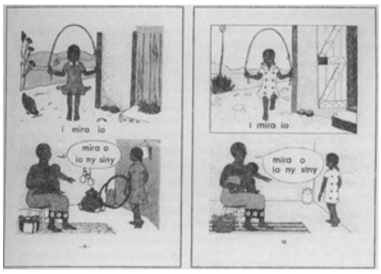

5. Outline elements that are central to the text.

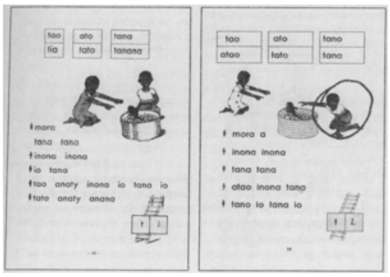

6. Use images to reflect the dynamism of the text.

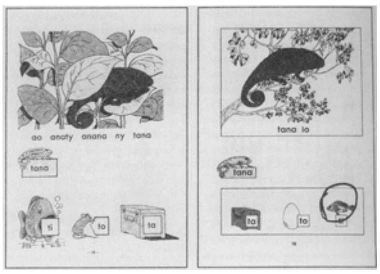

7. Check the exactness of specific elements[5]

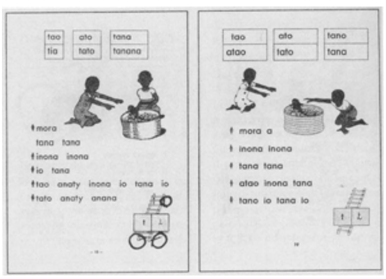

8. Get rid of superfluous elements which distract the reader or get in the way of visual decoding.

Final Versions of the Drawings

To ensure that the arrangement of text and illustration is as perfect as possible, it is better not to start with the final versions of the drawings until the text has been typeset and the text layout finalised.

When the authors are responsible for supervising the illustrator they must not only examine the drafts and suggest any changes. They must also decide which tools the illustrator will need (Rotring pens, fountain pen, tweezers, etc.) and which materials are best suited to the printing procedures to be adopted (tracing paper, canson, etc.).

All originals should be kept carefully; simply note the page on which the drawing is to be printed, and make a photocopy before filing the original. If it is not modified in any way, it should be submitted to the printer at a later date in this state.

3. Layout

During the conceptual phase you will have laid down a fundamental visual structure for your book, which you will have developed in more and more detail during the various stages involved in writing and illustration. But the fruits of your labour are not yet ready to be published. If we can make a comparison with the world of haute couture you now have the fabric to make your dress and you have an idea what form the dress should take. But you still have to cut, sew and finish the garment.

During this phase you will “tailor” the page, deciding on the stencil, putting it together with the typeface you choose and finishing it by checking the arrangement of the elements on the page.

We cannot claim to present the fundamental principles of layout in a book like this; the field is much too wide. We will thus look only at what is essential for an author of textbooks, who alongside his many other roles finds himself responsible for the layout of his book, although he cannot claim to be a professional in this field. If you find yourself in this situation, proceed as follows.

Margins

Your first concern must be to decide on the margins.

All printed materials have four margins, at the top, bottom, left and right hand edges of the page. Margins give a book its particular style, and you should aim to find the proportions which will give the best possible balance and coherence.

The size of the margins can be set professionally; layout artists today still set the margins on the basis of calculations or diagrams, and many still refer to what has been done in the past[6]. You need not be so scientific in your approach, but you should respect three basic principles.

A good layout person seeks excellence in every layout detail
Leave wide enough margins

Firstly, the outside margins on each page must be wide enough for you to hold the book in your hand without concealing the text. Secondly, convention dictates that the margins increase slightly from the interior of the page/towards the top called the “head” and from the outside of the page/towards the bottom, or “foot”: the most important thing to observe with margins is, however, that they present the text to its best advantage. A one-centimetre margin, for instance, is quite inadequate and will give your book a cramped look. Finally, once you have decided on the margins they must be respected throughout the book, from the first page to the last. In general nothing should be printed in the margins except the page numbers, or “folio” as they are known and any headers or footers, such as the ones at the top and bottom of the pages of this book. These elements are arranged outside the frame set by the margins, known as a grid. If it is absolutely essential for some elements to go beyond the frame thus set, for instance if you decide to incorporate bled-off illustrations which cover the page in its entirety, you should ensure that they are positioned in such a way as to make the continuity of the grid easily recognisable for the reader.

Arrangement of the Various Elements

Having decided on the margin width you should turn your attention to the arrangement of the various elements on the page.

You have already decided on a basic structure which allowed you to produce texts of the required length, but now you must decide on the finer points, laying down the final arrangement of texts and illustrations. The aim is to find the positioning that best reflects your pedagogical objective, i.e. to find the layout that best captures the reader's attention and facilitates the learning process.

If the contents of your book are relatively heterogeneous, as is the case in a reading and writing book, for instance, the layout is bound to be complex. Nevertheless you should not position the various elements instinctively. Arrange them as though they were on a sort of invisible grid. In view of the fact that the reader will be confronted by two pages of the book at a time, you should design your grid for even and uneven pages.

Start by familiarising yourself with the concept of a grid. Just look at the first page of your daily newspaper, and you will see that the text is divided into a certain number of columns, within which and across which the headlines and illustrations are spread; these columns are repeated on the following pages and give the newspaper its identity.

The grid for your textbook will never be as complicated as a newspaper grid, but you should have one to help you impose a certain discipline on your page and thus enhance the impact. The positioning of the various elements on this grid will not always be identical and rigorous; it will be a flexible distribution which may from time to time break with the basic structure without ever completely obscuring it and this will thus retain the attention of the reader without irritating him by introducing too many changes. On the opposite page you will find one example.

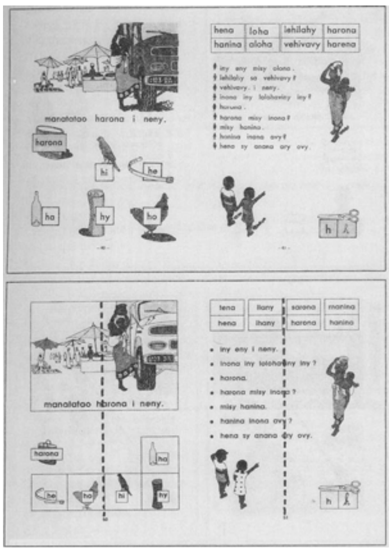

1. Decide on a basic structure for double pages; here we decided for two columns.

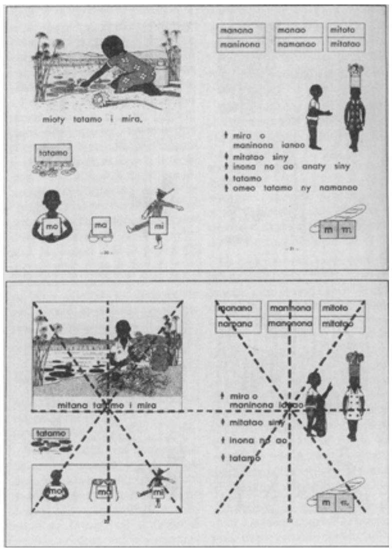

2. Position the various elements on your double page with the help of horizontal, vertical and diagonal lines of reference.

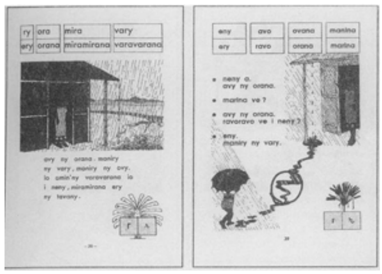

3. Avoid monotony and break with the basic structure, but ensure that it is still identifiable as such.

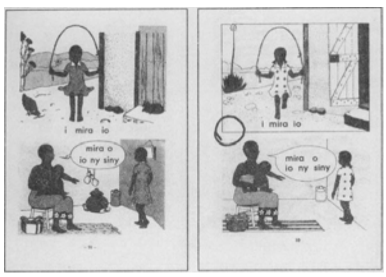

4. Make a clear optical distinction between the various elements on a page.

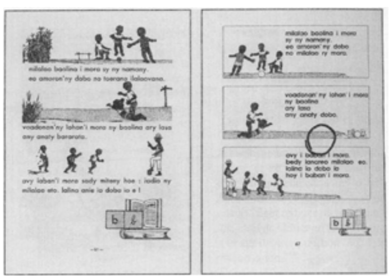

5. Bring text and image close together while respecting the requirements of both.

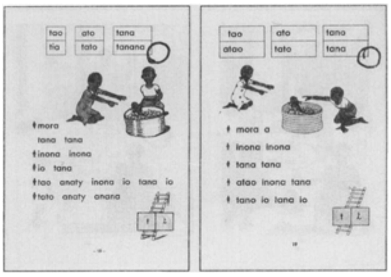

6. Respect the grid.

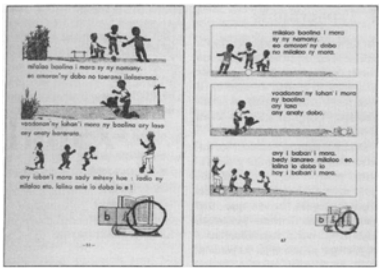

7. Balance the dimensions of the various illustrations on a page.

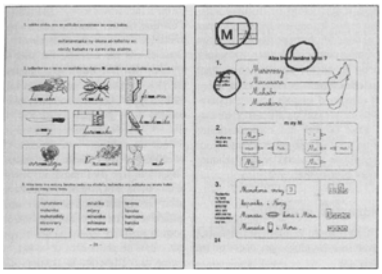

8. Use different sizes of typeface to indicate the relative importance of the texts.

There is no sure-fire recipe for a successful layout, you must gather experience and know-how and always examine the quality of the final product.

Given the fact that this book is not dedicated solely to layout, we have chosen to illustrate a few of the basic principles, again with the help of real-life examples. On the following pages you will find examples of some of the pages of the pilot version of *Garabola* for which the contents were arranged intuitively on the page by the authors, side by side with the final version where the layout was corrected by a professional[7].

Compare the two and think about the principles behind the changes; they probably apply to your book too. Most changes are indicated by a circle.

Arrange the elements on the page according to a grid, which need not be unduly complex - two columns are perfectly adequate

Practice identifying basic layout principles if you have no recourse to a professional layout man

There is no sure-fire recipe for good layout: rigour and imagination are equally necessary

Moderation is always called for in layout for primary school textbooks

The layout must bring out the essential elements

The layout concerns all the elements on a page; don't forget to examine the drawings, texts and blank spaces on each page

4. Typography

By deciding on the precise margins and identifying the exact arrangement of the elements on a page, you have drawn up a plan for your book. You must now decide on the typographical features of the texts and exercises.

In a publishing house, this work would be performed by a professional graphic artist. If you are forced to make the typographical decisions you should firstly be aware that this is an extremely wide field, where research has been conducted for centuries, and about which more is being written today than ever before. It is a field that we cannot hope to do justice within the scope of this book any more than we could for the layout.

To avoid repeating information that you will find in any specialised literature, we have decided not to dwell on any details that are not immediately relevant for textbook authors. For reasons of clarity we will equally take only a cursory look at those typographical features which will feel are important for a first reading book. Read the following pages in the knowledge that they are far from being complete, and try to adapt the recommendations to suit your own specific circumstances.

We would suggest that you adopt the following procedure to decide on the typographical features for a first reading book.

Aspects to Take into Account

First of all make a list of all the aspects to be taken into account, the most important of which will be:

1. The characters

- class
- type family
- fount
- category
- size of type body
- weight of type

2. The texts

- character spacing
- word spacing
- line spacing
- paragraphs
- line length and justification
- level and hierarchy of texts

Decisions at Character Level

Once you have drawn up your list, turn your attention firstly to six aspects concerning the characters you plan to use. The information below should help you make your decision.

Class

Today, you can print a multitude of different characters. They have been classified many times over[8]; one of the most widely used is Maximilian Vox's classification, which distinguishes eleven groups of characters[9].

For a first reading book you should select the best class to help pupils learn to read and write. Straight-line characters are good for this and are found in most textbooks which address grade-one pupils. First of all the characters look like a simplified form of cursive style, and, unlike the characters used for other classes, they have no serifs (short lines drawn at right angles or obliquely across the ends of stems and arms of letters), which are not found in cursive style either. This means that the pupils need not discount any elements when they write most of these letters in cursive style. They simply have a shape to complete. These characters are also of more or less equal weight of type throughout, and since the days of the heavy down strokes and light up-strokes are over, they are thus more like the style of writing actually taught.

As of the second grade, the pupils should be able to read texts written in characters with and without serifs. In the books for second grade upwards you should thus select a different class of characters.

Lower case characters with serif

garabola

Lower case letters without serif

garabola

Type Family

Several families of characters are affiliated to each of the classes.

If you are producing a first reading book for which you have decided on a class without serif, you can now look at the form of the lower case characters of the different families that go to make up this class. For optimum readability, each letter should be immediately identifiable, without any chance of confusion, even when the letter stands alone. You should thus examine every individual character, one after another.

Check that the descender of the **j**, for example, finishes with a curve and does not only consist of a downward stroke. Likewise, the curve of the **r** must be clear enough, etc.

You should also pay particular attention to the form of two letters, the **a** and the **g**; to make it easier for the pupils to learn to read and write at the same time you should select a form which is as close as possible to the shape they will learn to write.

In the next books in the series you will have more leeway to chose the family of characters, once the pupil has been systematically introduced to the new forms of the **a** and **g**.

Look at the two examples below, before you decide on the form of **a** and **g** you wish to use.

garabola
garabola

Fount

Every family has three founts: roman characters, in which the axis is vertical, italics which are inclined and cursive style in which the letters are joined up as they are in handwriting[10].

There are no fewer than 12 aspects to be taken into account when deciding on the typography

Typography is important in all printed materials, but for a first reading book it is absolutely critical

The first form is best suited for pupils who are learning to read, while the second is reminiscent of handwriting, but should not be taken as a model for the first graders.

Category

Should you use upper or lower case letters?

In some languages, such as German, it is imperative that children learn both lower and upper case letters from the start, since upper case letters have a specific grammatical role, such as to denote nouns. In a first reading book you may, in some languages, be able to avoid using upper case letters. If you are forced to introduce both, use the same technique to introduce the upper case letters as you have already employed for the lower case - use characters with straight lines and no serif.

Here are two examples to illustrate this difference.

Upper case with serif

GARABOLA

Upper case without serif

GARABOLA

Size of Type Body

If you look closely at this book you will note that not all the characters used are the same size. We say that the type body is of different sizes, and we define this size in points; to give you an idea of sizes, the main body of this text is printed in Palatino, 10 point.

At the start of a first reading book you could use 24 point and then go on to use 18 point. Before deciding, try out the different sizes; and for the moment look at the following models.

Avant-Garde, 24 point

Garabola

Avant-Garde 18 point

Garabola

Weight

The weight, or thickness, of the characters used can vary; to convince you of this look once again at this book. You will find normal and bold characters: in photocompositors' catalogues you will find other options including the following:

Garabola (extra-light)
Garabola (light)
Garabola (medium)
Garabola (bold)
Garabola (extra-bold)

For a first reading book you should select normal characters for a continuous text and bold letters for headings as well as for free-standing letters, symbols and words.

Decisions at Text Level

Once you have decided how to deal with the characters you can come to the text, and look at the following aspects.

Character Spacing

The space left between letters within one word ought to be chosen for maximum readability, neither too large as can sometimes happen when texts are written in columns, nor too small.

This point is important when you are working on a reading book. If you have used straight-line characters, you will notice that the absence of serif makes it difficult for beginners to read certain combinations of letters; narrow letters, such as **l**, **t** and **j** are difficult to identify when they are followed by an **i** with automatic spacing.

To help solve this problem, you should widen the space between characters slightly. By way of illustration here is one word written with automatic spacing and one with slightly wider spacing.

Garabola
G a r a b o l a

Word Spacing

For maximum typographical readability, the space between words should equally not be too wide or too narrow.

But, for texts written in large characters, such as those found at the start of a first reading book, it may be advisable to use double word spacing. This will allow beginner readers to identify each word more easily as a unit. If you leave a double space between words, however, take care that the sentences do not appear disjointed.

Here is an example of single and double word spacing

Garabola, school textbook
Garabola, school textbook

Line Spacing

This is the space between two lines within the same paragraph.

You should be able to decide on a line spacing which will give your text optimum readability. If the line spacing is too large, each line will seem artificially isolated on the page, which will slow down the reader. On the other hand if the lines are too close together readability will also be poorer because the descenders of the letters on one line will become confused with the ascenders of the letters on the line below.

Computers insert automatic spacing; if you wish to modify this, try out different spacing.

The example below shows automatic, narrower and wider line spacing.

Garabola is a reading and writing book for first-grade pupils in Madagascar's
primary schools. It is written in Malagasy, printed in monochrome and stapled.

Garabola is a reading and writing book for first-grade pupils in Madagascar's
primary schools. It is written in Malagasy, printed in monochrome and stapled.

Garabola is a reading and writing book for first-grade pupils in Madagascar's

primary schools. It is written in Malagasy, printed in monochrome and stapled.

Paragraphs

In texts which address experienced readers, the start of a new paragraph is marked by different line spacing, by indentation of the first line of the paragraph or by a first line which starts further to the left than the body of the text.

In a first reading book the start of every new paragraph should be clearly indicated, if necessary by double line spacing.

Once again use this book to familiarise yourself with the possible ways of indicating the start of a new paragraph.

Line Length and Justification

The length of the line again should ensure good readability; when the characters used are small, the line must not be too long so that the reader can find the start of the next line without difficulty.

It is possible to allocate spaces between words to make a line a predetermined length or width; then we say that the text is justified or aligned at the right and left-hand sides. This is not recommended for a first reading book where words would be stretched out to avoid hyphenating them, which in turn would not make for good readability.

For a first book, unjustified or ragged-right settings are generally preferred, i.e. the left hand edge of the text is aligned, but not the right hand edge. The gaps in the text at the right hand edge often correspond to natural breaks in the text, in line with the meaning units.

The right-hand edge of the text can also be justified as you can observe in the outside columns on each page of this book, or the text can be centred, with neither edge justified.

Use recently published textbooks to help you make your typographical decisions

Level and hierarchy of text

The typography must make the text easy to read, by giving the reader a series of clear visual signs. When you decide on the layout of a book two things are important: firstly to distinguish between the text that addresses the pupils and the accompanying notes and instructions which are not necessarily meant for them, and secondly to show the hierarchy of the text, i.e. to identify the various headings and sub-headings.

You can guide the reader not only by separating the text blocks from the instructions, but also by using different typographical features, i.e. the judicious use of different sizes, founts and weights can indicate to the reader which parts of the text are headings, sub-headings, notes, etc. without your having to number them.

Let us add that this fact is extremely important to ensure linguistic and typographical readability in the teachers' guide. When you decide on the layout, you should thus re-read your manuscript and mark the various levels of text.

In our experience even if the plan is detailed and the points seem to follow on logically one from another, there are almost always imperfections. For instance we find a major heading, which we will call a level 1 heading, followed by a level 2 heading, and then we find that the text suddenly jumps to a level 4 heading, completely by-passing level 3.

There is no better way to avoid errors of this sort than to re-read the text, draw up a detailed table of contents and compare it with the body of the text as often as necessary.

Additional Visual Aids

In a school textbook the hierarchy of texts is sometimes such that it is not enough to alternate between characters of different sizes and weights; additional visual aids may be necessary.

These should be used to the extent appropriate and necessary; excessive or inappropriate use of additional aids will only confuse the reader. The aids we outline below have a place in a reading book.

Boxes and Lines

To underline the separation of two distinct parts of a page, or to draw attention to one element or emphasise the unity of one exercise, you can use a box or a fine line.

You will see from this book how we have used these aids. You will find a certain number of boxes, most of which have only horizontal lines. We have used lines with circumspection, but you will find them, for instance separating pieces of information in tables or separating the body of the text from the running head on each page.

Shading

To underline an element or a distinguish between different levels of text, a slight grey or coloured shading can be used. You should only attempt this if the assembly and printing conditions are good. Nothing looks worse than letters which are to be emphasised that are badly printed or badly shaded. Once again look at the use we have made of shading in this book.

Pictograms

In a first reading book one is tempted to use symbols which it is felt will be easier for the children to decode. Thus slates are used to indicate a written exercise instead of a heading, while silhouettes are used to represent the speakers, dispensing with inverted commas. But again avoid overkill - keep the use of pictograms to a minimum.

5. Job Envelope

You have planned and defined the illustration and layout work. Generally you will then have delegated this work to the illustrator on the one hand and a keyboard operator on the other.

But, as this work is returned to you, you must check the quality before submitting it to the printer, and it is up to you to do this.

What you now have to compile is a copy of your book which is at least definitive if not complete; the printer must not have to add, remove or modify anything. And once he has received your job envelope and your written instructions regarding the printing, he should not have to consult you with any further questions. Once you have given him the final version of all the documents and the written instructions he should be able to print without delay - or to be more precise he should be able to put together the pages to make signatures, have you check that the imposition is correct by submitting the blueprints to you, prepare the printing plates, install these in the printing press, load up the paper and print and trim the book.

The quality of the printing will depend almost entirely on the quality of the preparatory work. To make sure that it is as good as possible, you should adopt a methodical procedure, as follows.

> **This is the last part of your work as “publisher-authors” - take care not to nullify all your work to date**

First Proofs

You have submitted your manuscript to a keyboard operator. Before doing so you checked to make sure that there were no spelling errors in the manuscript, that no more corrections had to be made to the text, that the length of the text was in line with the layout requirements and that the punctuation had not been forgotten.

The first set of proofs you get back will surprise you; you will not always recognise the manuscript that you have slaved over for so many months... which is just as well, because it gives you a certain distance to the text and allows you to spot composition errors better.

In general the first set of proofs contains only the typewritten text in continuous form, without any concessions being made to the layout. Your corrections must thus meet the following criteria.

Clarity

Use a red pen to append your corrections and write as legibly as possible.

This recommendation always applies, but it is all the more important when you have a manuscript in a national language which the keyboard operator does not necessarily speak or write well. Form every letter with great care if you want to avoid the keyboard operator making more errors as he or she corrects the first set, which will only add to the number of times you have to proofread.

The groups of authors which we have had the opportunity of observing have always corrected by hand, indicating in the margin when a letter or word must be changed, added or removed, a paragraph inserted or two syllables joined up. They either rewrote the entire word or gave detailed instructions as to the changes to be made, and these instructions were generally understood without difficulty by the keyboard operator. You too can adopt this procedure, but you must be careful that your instructions and corrections are always clear.

Official systems of proof correction marks do exist. They are used by professional proof readers and can be found in most books on layout and typography; you can refer to these works if you wish to upgrade your work - but check first that the keyboard operator is familiar with them, or far from enhancing the results you may face a disaster.

Precision

Read the proofs again and again and track down all the errors.

You must bear in mind that as from a certain stage the authors themselves become blind to the mistakes in their work; they can read and re-read their manuscript without picking up the errors. Thus, you should read and re-read the first proofs several times, but do not consider this work definitive. At a later stage you will have to read the second set of proofs, which you will receive once the layout has been done and the typographical choices translated into practice.

Pertinence

If you are working in a language which still has few standards, you will be bound to have some doubts as to how to split a word for instance, the use of the apostrophe in a compound word, the use of capitals or how to write certain abbreviations. Do not correct these points before you have agreed on clear standards with your colleagues or checked if such rules already exist.

We must stress that when several groups of authors are working on didactic material in the same national language it is crucial - and extremely difficult - to ensure that the language used by all the groups is standardised. Care and discipline are vital to achieve this.

Functionality

Do not make corrections just for the fun of it. As we said the last author corrections have been made. Remember that the text you submitted to the keyboard operator had already been read by numerous people, and unless you find a really serious error that none of them has found, do not make any more changes. If you really feel, in spite of everything, that you have to make more changes, consult your colleagues first.

Re-read proofs with great care

Final Proofs

The proofs that you have re-read and corrected should now be submitted once more to the keyboard operator, who will not only incorporate your corrections, but will then do the layout. He will follow your instructions as regards the characters and text features, and will then submit to you another set of proofs which you will once again have to re-read and correct. You must pay particular attention to the following aspects at this stage.

Spelling

Re-read the proofs one last time. No effort can be too great to locate a missing point or a spelling error in a text designed for beginners. You will be held responsible for all mistakes - and this is the sort of mistake your readers will be quick to note.

Split Words

Generally, when the text is arranged in columns some words will be split at the end of the line - check that this has been done correctly.

For languages in world-wide use you will find computer programmes which hyphenate words automatically. When you are working in a national language for which there is no such programme, pay particular attention to this point.

Hierarchy of Texts

If you plan to use different characters, or different sizes and weights of characters check that your instructions have been properly followed, in particular that the hierarchy of texts has been properly respected. Paragraphs must be treated uniformly.

A heading in the same size of characters as the normal text, a word which has not been printed in bold print as planned, or one paragraph which is indented while all others are not - all these errors will make your book less readable and thus reduce the quality of the finished product.

Graphics Dossier

Everything which has not been processed by the keyboard operator must be submitted separately to the printer. When your book is a reading and writing book for primary level, this dossier will generally include the original drawings and hand-written examples of writing. You should ensure that the dossier is complete and that it contains the following instructions.

Dimensions of the Illustrations

Some drawings can be executed without difficulty in the size required, but for very small illustrations, such as text-illustrations for exercises, it would be better to have the illustrator produce larger drawings. In this case you must instruct the printer of the extent to which they must be scaled down, or “reduced”.

Shadings

If you decided to print your book in two colours, or to use one colour only but to add shades of grey in illustrations you must check that you have included a photocopy of the originals indicating exactly which colour or shade has to be printed where.

Assembly Instructions

If the page contains several elements it is not enough merely to submit the text and the illustrations to the printer; you must also give him precise instructions as to the layout of each page.

The best way to do this is to prepare as complete a layout guide as possible for every page, using photocopies of the originals. The layout artist will base his work to the millimetre on this hand-made model: he generally has the instruments and the skills required.

Final Checks

Before you submit the job envelope to the printer ensure again that it is complete.

In our experience, many groups of authors are tempted not to finish their work in an attempt to accelerate the printing work. They submit an incomplete job envelope and think that they will complete it afterwards.

But, once the printer has the job envelope, those concerned with the development stage almost automatically consider their work over.

It is then very onerous to complete the work properly, because it is difficult to find every missing element: the illustrator appears to have vanished off the face of the earth, the photocompositor has other urgent work to finish or it is impossible to consult all the authors, since the group has been disbanded or sent elsewhere.

It is thus imperative to go through the job envelope one last time while all the actors are still present and correct. You should focus, in particular, on the two following aspects.

Complete Development

All the many elements of the book should now have been duly prepared; you should not find the four cover pages are missing, or find that one page has vanished or that you are suddenly missing a text or graphic element on any of these pages.

For many years, we spread out the dossier on a desk, leafing through the pages one after another, which meant that we never had a complete vision of the dossier as a whole. Now, however, we believe that the best way to ensure that nothing is missing is to stick up a photocopy of your entire model on pinboards. This allows both authors and outsiders literally to take a stroll through the book. We have found that the physical distance this gives you allows you to note certain omissions and even to find (more!) typing or spelling errors which can still be corrected at the last minute.

We would thus urge you to adopt this procedure, and not to be content until every member of your team has examined the book page by page and signed each page on the pinboard.

Complete Job Envelope

Secondly, check that all the original documents have been put together and all the necessary instructions given to allow the printer to produce the books without difficulty. You should then examine your textbook page by page, as it is pinned up on the board and make sure that everything is complete.

Here too we have modified the way we work over the years. For years and years we submitted a text dossier and an image dossier to the printer separately. Today we do things differently. For every page of the book, we prepare one large envelope on which we write the page number. The envelope contains all the pertinent elements for that page.

Thus for the revised version of *Garabola* each envelope contained

- The original copy of the texts
- The original copy of the illustrations
- A photocopy of the illustrations bearing the instructions for shading and, in some cases, for reducing the illustration
- The original copy of the hand-written examples in cursive style
- A montage using a photocopy of the texts and illustrations.

Once you hand this job envelope over to the printer, your work as authors is almost over. Afterwards, if you have prepared your dossier well, the printer will not have to contact you again before he submits the blueprints; these are the last proofs, printed on blue paper to allow you to check the assembly of the elements on the page, the imposition and perhaps also the shading. The blueprints will be submitted to you one signature at a time; you should check them, and if there are no errors you should give the printer the go-ahead, signing each one. The book is then out of your hands and you won't see it again until it is published.

We would just like to draw your attention to one last point: you should never make author corrections on the blueprint. Do not give in to the temptation to improve your text at this stage - it is too late. What can happen, of course, is that you spot another typing error, which you must, of course, correct. This is, however, the absolute exception, and if you have read this book attentively we will not have to explain why.

6. In Conclusion

Calculating the Sales Price of the Book

The production of textbooks in developing countries is a long process and requires the attention of the authors throughout. Once the process is launched the authors rarely have time to stand back and evaluate the price of the operation.

There is, however, so much at stake that you must gauge the viability of the exercise. An examination of the costs should allow those concerned to better manage their work in future: authors and publishers thus have a good basis on which to determine the physical and graphic aspects of a series of books, and on the best way to produce them, or the final version, where you have been working on a pilot version.

This work should be performed by specialists who will take into account the following[11].

Printing and production costs

At the end of the conceptual phase you had a provisional quotation drawn up for the production of your book, based on approximate figures. You now have the precise figures, since the printer has been able to update and modify his prices. You can thus take the figures in his final quotation.

Development costs

These costs include all costs incurred from the preliminary research phase until the job envelope is submitted to the printer, i.e. all the costs of preparing the manuscript, the graphics dossier and the layout work.

Overheads

These are costs which do not relate directly to any one task, such as general administrative services, rent or vehicle maintenance, so important for field work.

Costs of distribution and/or sale

These costs cover the packing and transport of the books to the schools; in some cases they will also include the costs of advertising and promoting the book.

Throughout this book we have emphasised the huge responsibility borne by authors, the honesty they must bring to their work, the rigour and precision required. The costing exercise will convince you of the truth of this if nothing else has: authors of textbooks may not under any circumstances act negligently.

Notes

[1] The blueprint does not always allow you to check the different shades of grey very exactly, but you can spot omissions in the shading, which may be printed white if not corrected.

[2] The blueprint allows authors to check changes made by the printer and remedy any errors. One example we encountered was the exercise on telling the time in an English book, where the printer had had the clock redrawn; it had certainly gained in aesthetic quality, but the time on the clock face no longer corresponded to the English sentence next to it, which the pupils were to learn.

[3] The monitoring showed them that even the highly improbably is possible and allowed them to correct some errors: thus we noted that the red Pantone ink which we had ordered overseas to print the cover had been wrongly delivered and that the cover was about to be printed in pale pink.

[4] If, however, you are forced to deal with the legal side of things look at the question of authors' rights and royalties, and be sure and consult the books recommended here.

[5] The pupils are expected to recognise not just any old fish but the “tilapia” which is well known in Madagascar, which is why the changes had to be made.

[6] Layout problems are not new: in the thirteenth century the French architect Villard de Honnecourt proposed a model which divided the page harmoniously; today research is still being conducted; some of the most interesting includes the work of J. Tschichold and R. Rosarivo, which you will find in the books on layout listed at the end of this chapter.

[7] Most of the changes to the illustrations and the layout of *Garabola* were made by Marina Dinkier, a professional graphic artist. These modifications significantly improved the final version. Cf. Dinkier, M. *Mise en page et préparation pour l'impression.* Internal paper, Tef'Boky Project, 1990.

[8] The major classifications are the work of Thibaudeau (1921), Vox (1952), Novarese (1964), Jacno (1978) and Alessandrini (1980). They are based on various perspectives (historical, aesthetic, geographical, etc.).

[9] In this classification the two last groups (Gothic and non-Latin characters) are not generally particularly relevant for textbook authors.

[10] If the textbook is to give examples of handwriting, you should bear in mind that computer programmes which can reproduce writing of this sort are expensive and rarely meet all your requirements. It is often a good idea to have examples illustrated by hand.

[11] We refer you to the costing grids proposed by F. Richaudeau in *Conception et production des manuels scolaires,* op. cit., pp. 215-239.

Recommended Reading

Preparation and Re-Reading Copy

BAUDIN, F. La préparation de la copie. In: DREYFUS, J. AND RICHAUDEAU, F. *La chose imprimée.* Paris: Retz, 1977

GUERY, L. *Manuel de secrétariat de rédaction.* Paris: C.F.P.J., 1990

PRESSE ET FORMATION *Abrégé du code typographique à l'usage de la presse.* Paris: C.F.P.J., 1991

Layout

DUPLAN, P. AND JAUNEAU, R. *Maquette et mise en page.* Paris: Usine Nouvelle, 1986

GUERY, L. *Précis de mise en page.* Paris: C.F.P.J., 1988

RICHAUDEAU, F. *Manuel de typographie et de mise en page.* Paris: Retz, 1989

Typography

AICHER, O. *Typographie.* Lüdenscheid: Druckhaus Maack, 1989

DREYFUS, J. AND RICHAUDEAU, F. *La chose imprimée.* Paris: Retz, 1985

SALBERG-STEINHARDT, B. *Die Schrift: Geschichte, Gestaltung, Anwendung.* Cologne: DuMont Buchverlag, 1983

TSCHICHOLD, J. *Meisterbuch der Schrift.* Ravensburg: Otto Maier, 1965

ZAPF, H. *Variations typographiques.* Paris: Hermann, 1965

Illustration

FUGELSANG, A. *About understanding. Ideas and observations on cross-cultural communication.* Dag Hammarskjöld Foundation Uppsala, 1982

WALKER, D.A. *Understanding pictures.* University of Massachussets, 1979

To Sum Up

All the work we have described until now, has been geared to producing the raw material of the textbook. To make it publishable, you must now polish it and put it into its final form. To put it more plainly, you must have the illustration and the layout work done.

At this level everything is still open: a good manuscript can become a good book, but it can also be made into a monotonous, abstruse or obscure book. The illustrations and the layout of a book give the contents their contours, which will promote or block learning. You should thus illustrate the texts in a functional way. Do not decorate. Create references which will help the reader without trying his patience. Establish a rigorous and transparent structure for your book which will not bore readers.

This work demands unique expertise, an expertise which not all authors of textbooks in developing countries possess - sometimes they are not even aware of how important it is. Given the fact that few of them will have recourse to a professional and that there are few long-term training courses, they should try to train on the job, by

- demanding sporadic support from technicians on the spot, and in particular from the printer
- using specialised reference works on layout in particular
- acquiring certain mechanisms as they read, so that they register not only the contents but also the graphic features of printed materials.

This phase is over when the job envelope has been submitted to the printer. It should be so well prepared that contacts with the assembly man and the printer are kept to a minimum.

Even if the author's work is now finished, it is vital that the work performed be recapitulated and costed. Specialists should always calculate the price of the book, taking into account not only the development and production costs, but also the overheads and the costs of distributing the finished product to the schools. This is vital feed-back but it is all too seldom passed on to the authors in developing countries.

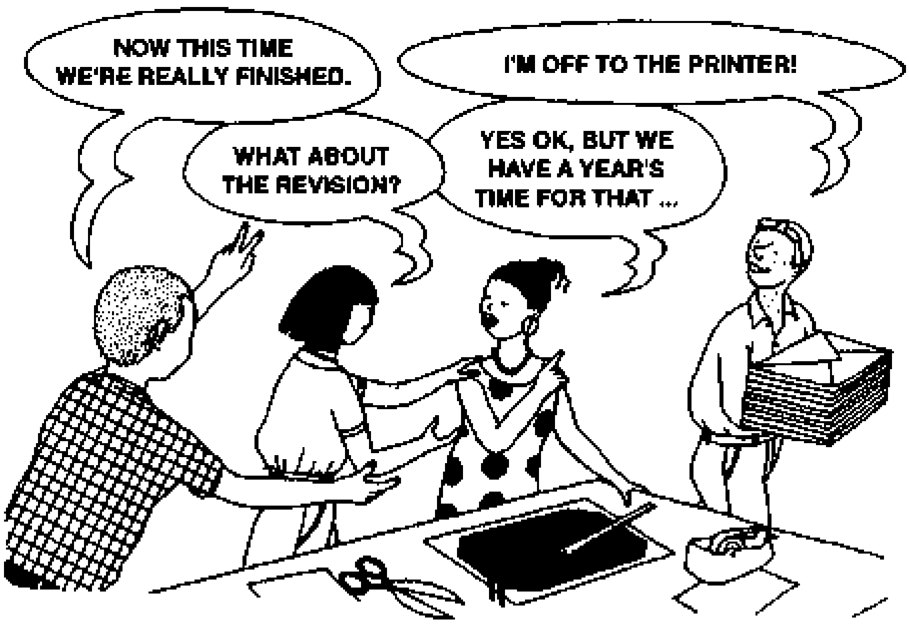

By Way of Conclusion

You have now devoted several years to preparing a school textbook and you have just handed in the final version to the printer.

The fruit of so much work will now ripen rapidly as far as you are concerned, for the printer's deadline will bear no relation to the time you have spent up to now. The printing is generally the shortest step in the entire chain, assuming that the authors have made all the necessary preparations.

The joy and pride you will feel the first time you take your book in your hands and flick through it will almost inevitably be slightly dampened. You will be disappointed that the margins are so narrow and that you didn't notice before, that the grey of the shading is too dark or because at this stage you find a typing error in a prominent position, quite inexplicably in view of the care with which you compiled the manuscript and the model.

It is undoubtedly true that errors of this sort detract from the quality of the book, and may discourage authors, but they are minor details, even if people rush to point them out to you. The most important thing is that the book exists and that it is of an acceptable quality. By producing this book in such difficult circumstances you have blazed a trail for other publications of even better quality. In view of the urgent demand for textbooks in many developing countries, and the production conditions commonly encountered, minor shortcomings such as those mentioned above are relatively unimportant.

The publication of a book always marks the end of a long and intensive period of work. Given the book situation and the scarcity of experienced textbook authors, it is to be hoped that the skills thus acquired will be shared; that all those who toiled to make their contribution to a quality publication will continue in this line of work.

But, do not fall into the trap of thinking that your training is complete after the first book. You will never have learned everything there is to know, and the quality of your work will always depend on the diversity and solidity of your training. Every book you work on will be a challenge in its own way, and you will have to find individual, tailor-made solutions in each case. Your products will gradually improve the more experience you have and the more you learn. Keep in touch with professionals in the world of publishing, gather your own documentation, examine the contents and form of other printed materials, in particular textbooks, to try to help improve the efficiency of schools in your country.

Annexe: Evaluation

Pupils have worked with the pilot version of your book over a period of one or several years. But your odyssey is not quite over yet; if you look back at the first chapter you will see that in developing countries the evaluation of pilot materials is an integral part of the chain. And, now that you have the chance to look at your book with a certain distance, you will be the last to stand in the way of a revised version: not only will you stumble over minor errors which you will find inexplicable after all the double, triple and quadruple checks, but certain doubts will also begin to sprout in your mind regarding the contents and the graphic features. An evaluation, followed by a revision of the pilot materials is thus called for in most cases.

How should you go about this? In some countries the ministry will assume responsibility for the evaluation. It will examine the books presented by private publishers and decide whether or not to accord the book official authorisation. It is not the actual performance of the book in schools that is evaluated here; the book is simply assessed according to a grid comparable to the grids you will find in the recommended reading at the end of this chapter. It is generally a sort of censorial work.

In our opinion grids of this sort are useful for authors performing internal checks as they write didactic materials, but they are quite unsuited to revising school publications. It is, in any case not sufficient to analyse new didactic material from your desk; it is imperative to look at how it actually works in schools.

For most of you, the evaluation work will constitute a new research project. You will have to carefully plan and execute numerous, complex activities and the work will sometimes involve managing significant human, technical and financial resources.

You should realise that this phase has much in common with the preliminary research phase, which is why we will only give you some general pointers, to help you understand how to make the preparations for the systematic revision of pilot materials; we will not repeat the information presented in chapter 3, but will simply refer you back to it whenever appropriate.

1. Overview

One of the main difficulties which you will face in your evaluation work is bound to be the logistics. In some cases, you will already be involved in other work, like drawing up your next book, and in others the education authorities will exert a lot of pressure on you to produce the final version as rapidly as possible[1].

Whatever the specific constraints you will almost always be working under time pressure, which means that you must plan the evaluation activities meticulously to ensure that you achieve the quality required within the given time-frame.

Evaluation is a major task which will often take an entire year. To give you an idea of the scope and the complexity of this phase we will sum up the major steps taken in the Tef'Boky Project to evaluate the first version of *Garabola.*

Evaluation Work for Garabola

Aspects, Strategy, Instruments

October 1988

Once production work on the *Garabola* set (reading book, writing book and teachers' guide) was completed, the authors were quick to set up an evaluation system so that the evaluation could start at the beginning of the academic year. They drew up a list of the aspects to be examined, and then decided on a strategy and the research instruments that they would need to give them the information they required.

This was one of the most labour-intensive phases of the entire project, involving the following tasks in addition to the evaluation per se:

- designing and organising a system to distribute the *Garabola* materials to the schools in the test zone

- designing, organising, realising and evaluating the presentation of pilot materials to the 40 teachers concerned

- initiating the design work on *Tongavola,* reading and writing materials for the second year of primary school.

The authors could not do everything themselves, so they devised an evaluation strategy which only demanded their participation on a sporadic basis: they concentrated on devising evaluation instruments, taking part in classroom observations and interpreting the final results. The major logistic work, including gathering data and processing it systematically, was entrusted to a small team specially set up for this.

Daily Self-Evaluation Grid

October 1988

The first evaluation instrument was a daily self-evaluation grid. This was the first priority of the authors so that it could be completed and distributed to 9 teachers in time for the start of the academic year. The nine were recommended by animateurs for their professional ethics; they undertook to fill in the grid every day.

First Test Series

December 1988

The second instrument was a series of tests to be run at the end of the first term in all 40 test schools. This activity had a dual objective: to evaluate the very first results obtained with the new materials and to examine the level of receptiveness in the schools, which would enable the team to take remedial steps at an early stage if necessary.

Classroom Observations

January 1989

The third instrument was a classroom observation grid, allowing the evaluators to look at the way *Garabola* was used over a one-week period; the authors themselves thus spent one week at the schools at the start of the second term.

Critical Examination of the Material

January 1989

At the same time the *Garabola* set was sent to various individuals for a critical examination. It was accompanied by a form letter, inviting the recipients to make their comments and suggestions.

This action brought absolutely no results; not one single comment filtered back to the authors. It may be safe to assume that personalised questions would have had better results.

Second Test Series

March-June 1989

The last evaluation instrument consisted of tests to gauge reading and writing progress. Preliminary tests were firstly run in two rural schools after which the instrument was modified. To give a comparative analysis of the year-end results the tests were run in 20 of the schools in the test zone and 20 control schools. The working conditions in this control group were comparable to those in the test schools, but they did not use *Garabola.* The evaluation team, duly instructed, ran the tests; the team members took advantage of this field visit to gather documents, first and foremost writing exercise books and gather information, such as the rate of attendance at the schools and the physical state of the books - all data which will help make for a complete evaluation.

Processing and Interpreting Results

July-August-September 1989

The team of evaluators was charged with processing the test results and the other information gathered. The authors then examined the data and interpreted it.

Development of an Evaluation Report

September-December 1989

In view of the fact that the material broke with certain practices, notably significantly lowering the attainment targets laid down in the official curricula[2], it was important to inform the education authorities of the results.

A reference document was thus produced by an educationalist, since the authors were too busy to take on this task as well, and the document widely circulated.

2. Aspects of the Evaluation

Now that we have looked briefly at the possible evaluation activities for a pilot textbook, let us come back to the first stage, i.e. identifying precisely the aspects to be evaluated. Here is a short summary of the features that should usually be examined with care.

Effectiveness in Terms of Attainment Targets

You must prove that the materials actually do their job by analysing the results obtained using the new material as compared to the attainment targets.

The results of tests of this sort must, it is true, always be interpreted with care, but the results are of capital importance for you. If they are positive, general aspects of your material, in terms of the volume of subject matter presented, the learning method adopted and the composition of the materials can be considered appropriate. If on the other hand they are clearly negative, you must examine these aspects in great detail and be ready to make far-reaching changes[3].

And bear in mind that the education authorities are bound to attach great importance to the test results. Their first questions are unlikely to concern the aesthetic qualities, the suitability or even the solidity of the book, but whether or not it produces results.

Shortcomings of the Content Matter and the Form

The tests should give you an idea as to whether or not your material works; these general pointers will not, however, tell you what need not be changed and what should be modified on each page.

Before you can revise your material page by page with full knowledge of the facts you will need an instrument which will allow you to examine every aspect in detail.

Let us assume that you have been working on reading and writing materials: you should then look at the topics chosen, the linguistic and pedagogical aspects of the texts, the characteristics of the illustrations and the layout of the pupils' materials as well as the contents and presentation of the teachers' guide, rather than focusing only on the learning method used.

The results should enable you to revise your materials advisedly, on the basis of the reaction of users.

Repercussions on Attitudes to School

In many countries school rolls are dropping[4], a development which is attributed to several different factors.

Although it is true that the rate of growth of school rolls in a country depends primarily on the household income, it is also linked to learning conditions. It can thus often be instructive to see if the introduction of the new material coincided with a drop in pupil absences or not.

Robustness of the Book

Although it is relatively unimportant if a pilot book looses pages or rips easily after one year of use, the revised version must be robust, particularly if a large run is to be printed and used nation-wide.

It is important to examine the material after it has been in use for a certain period, so that you can take the necessary technical and financial steps in time to ensure that the revised version of your materials enjoys a long service life.

3. Evaluation Indicators and Instruments

Once you have decided which aspects you wish to evaluate, you must identify the instruments which will help you obtain the results required.

To this end you should take the same approach as you did during the preliminary research phase: firstly formulate indicators, i.e. easily observable, quantifiable or verifiable elements, and then determine which instruments will enable you to verify each of the indicators.

We suggest below a few indicators and instruments which can be used to examine the four aspects quoted above. Analyse them and adapt them as appropriate to your own circumstances.

4. Planning the Activities

Ideally you would be able to use all the instruments you have listed, but this will not always be possible.

When you come to draw up a systematic plan for the evaluation phase you will be able to identify which ones you will actually be able to use. You should draw up your work schedule, taking the following elements into account.

32. Identification of Evaluation Instruments
Aspects-Indicators-Instruments
Effectiveness of Material
School results
Attainment tests
Verification of the rate of learning (in teacher's lesson plan for instance)
Daily self-evaluation grid
Classroom observation
Shortcomings of material
Teaching process
Daily self-evaluation grid
Classroom observation
Voluntarily kept log-book
Learning process
Daily self-evaluation grid
Classroom observation
Analysis of pupils' exercise books
Repercussions of the materials
Parents' attitude
Talk with parents
List of school attendance rates of their children
Teachers' attitude
Talk with teacher
Verification of the frequency with which the material is being used, by checking its physical state
Daily lesson plan
Pupils' attitude
Talk with pupils
Physical aspects of the book
Strength when handled frequently
Examination of books
Ease of handling
Examination of books
Classroom observations
Talks with teacher

Institutional Priorities

In general, the existence of pilot materials in itself reassures the education authorities enough to stop them exerting undue pressure on authors to prepare a final version.

But if financial assistance has been pledged for printing and distribution, it is not unusual for time-limits to be set for the revision phase. In this case you will have to see how you can respect the deadlines without compromising the quality of materials which will then be used for several years in the schools of your country.

Human, Physical and Financial Resources

This is the second aspect to be examined when you come to plan your evaluation activities.

If you refer back to the experience in the Tef'Boky Project as presented earlier in this chapter, you will see that the authors delegated the responsibility for numerous tasks to a so-called evaluation group.

If you do not have this sort of back-up, and if your technical and financial resources are limited, plan your activities accordingly. Distinguish between what is desirable and what is possible, as you did during the preliminary research phase.

Scope of the Work

Time and special skills are always needed to develop instruments, but in developing countries, where research conditions are more complex than in industrialised countries, you will have to examine the entire evaluation phase, to avoid planning activities which are not feasible with the available resources.

In particular, no instruments should be used in the field without first undertaking a series of well-targeted preparatory measures.

It is, however, difficult to foresee all the work which instrument x or y will entail. To give you an idea of the scope of the work that lies ahead we list below the activities which we feel are indispensable to obtain significant results, if you opt for a comparative analysis of school results. Analyse these and draw your own conclusions for your specific circumstances.

Work Involved in a Comparative Analysis

The work involved in conducting a comparative study of school results is sporadic, it is true, but the tasks are many and varied, and are generally spread over an entire year. Here is a list of the principal tasks:

Identification of Test Schools

- Define a common profile for schools to be selected from the group of test schools and from outside this group (e.g. geographical location, teacher:pupil ratio, etc.)

- Undertake a first theoretical selection of schools having used the material to be evaluated

- Conduct a field visit to verify the data for the first set of schools

- Undertake a first theoretical selection of the control schools, followed by a field visit to check the selection

- Take the necessary administrative steps to allow you to operate outside the test zone.

Development of Tests

- Identify attainment targets to be evaluated

- Draw up a list of criteria referring to the contents, presentation, course of tests, marking scale and interpretation of results

- Develop the tests

- Illustration, layout and preparation of an adequate number of tests

- Select at least two schools, which correspond to the criteria laid down for the schools selected for the final test and administrative steps to allow you to run a preliminary test there

- Issue detailed instructions to those in charge of running the preliminary tests

- Conduct the preliminary tests

- Process results systematically and interpret these

- Make any modifications to the tests or the instructions given to those in charge

- Prepare a sufficient number of the final version of the tests.

Holding the Tests

- Plan the tests (e.g. identify those responsible for running the tests, available transport, sources of financing; draw up a schedule for holding tests school by school)
- Take necessary administrative steps and inform each school in writing when the tests will be held and what they will involve
- Issue instructions to those responsible for running the tests
- Make effective preparations for the field visit
- Conduct evaluation work in the field
- File immediately and systematically the tests and all other documentation collected in the schools on this occasion.

Systematic Processing and Interpretation of Results

- Issue instructions to those in charge of processing the data, regarding marking systems as agreed on earlier
- Examine and mark each test
- Draw up statistics
- Interpret the results
- Draw up a document presenting the procedures adopted and the results of the evaluation
- Distribute it to all interested parties.

5. In Conclusion

By way of conclusion we would just refer you to chapter 3 to refresh your memory about the follow-own work, in particular devising instruments, work in the field and data processing, and to some of the evaluation instruments which were used to evaluate *Garabola* and which may be useful to you, if not as a model, then at least for reference purposes[5].

Notes

[1] This always happens when the financing for a large run is available before the evaluation work is finished. The situation is not exceptional, but is always unpleasant for authors; time considerations often take precedence over the issue of quality.

[2] With *Garabola* first-grade pupils learn only 21 letters of the alphabet, whereas the current curriculum also provides for pupils learning 13 of the complex graphemes in Malagasy. It was thus particularly important to inform the education authorities about the results obtained in reading and writing.

[3] In the Tef'Boky Project the learning progress tests revealed that the writing exercise book was inappropriate given the current educational context in Madagascar. This led the authors to modify the make-up of the materials designed to teach writing in grade one of primary school. Cf. Chapter 4.

[4] "Although the rate of increase in enrolment declined at all levels of education, the drop was most pronounced at the first level, where it fell from 8.4 percent (approximately 2.9 million

additional pupils each year) between 1970 and 1980 to 2.9 percent (approximately 1.4 million additional pupils each year) between 1980 and 1983." In: World Bank "Education in Sub-Saharan Africa" p. 28.

[5] The evaluation work is described in its entirety in KOMAREK K. Dossiers II, 1993.

Recommended Reading

ABERNOT, Y. *Les méthodes d'évaluation scolaire. Techniques actuelles et innovations.* Paris: Bordas, 1988

DE KETELE, J.M. *L'évaluation, approche descriptive ou prescriptive.* Brussels: De Boeck, 1987

DE LANDSHEERE, G. *Dictionnaire de l'évaluation et de la recherche en évaluation.* Paris: PUF, 1979

KOMAREK, K. (Ed.) *La Série Garabola. Dossiers II.* Antananarivo/ Eschborn: GTZ, 1993

MAGER, R.F. *Comment mesurer les résultats de l'enseignement.* Paris: Bordas, 1986

RICHAUDEAU, F. Eléments pour un examen critique des manuels scolaires. In: *Conception et production des manuels scolaires,* op. cit. pp. 267-281

Bibliography

ABERNOT, Y. *Les méthodes d'évaluation scolaire. Techniques actuelles et innovations.* Paris: Bordas, 1988

AICHER, O. *Typographic* Lüdenscheid: Druckhaus Maack, 1989

ALTBACH, P.G. Problemas esenciales del libro escolar en el tercer mundo. In: *Perspectivas,* Vol. XIII, No. 47. Paris: UNESCO, 1983

ALTBACH, P.G. Copyright in the Developing World. In: FARRELL, J.P. AND HEYNEMAN, S.P. (Ed.) *Textbooks in the Developing World.* Washington D.C.: World Bank, 1989

ALTBACH, P.G. et al *Textbooks in the Third World. Policy, content and context.* New-York: Garland, 1988

ARCIVAL, D. et al *Guide pratique des techniques de l'imprimerie.* Paris: AFNOR, 1983

AREGGER, K. *Innovation in sozialen Systemen 1. Einführung in die Innovationstheorie der Organisation.* Berne, Stuttgart: Paul Haupt, 1976

AREGGER, K. *Innovation in sozialen Systemen 2. Ein integriertes Innovationsmodell am Beispiel der Schule.* Berne, Stuttgart: Paul Haupt, 1976

AVALOS, B. *L'enseignement aux enfants démunis. Une étude ethnographique en Amérique Latine.* Ottawa: Centre de recherches pour le développement international, 1986

BERGER, G. AND BRUNSWIC, E*. L'éducateur et l'approche systématique.* Paris: UNESCO, 1984

BERTHELOT, J. *Petit guide à l'usage des auteurs débutants et de quelques autres.* Paris: Hachette, 1991

BIJELJAC-BABIC, R. *L'utilisation des langues maternelles et nationales en tant qu'instruments d'enseignement, d'alphabétisation et de culture. Expériences dans les pays en développement d'Afrique et d'Asie.* Paris: UNESCO, 1985

BOUVAIST, J.M. *Pratiques et métiers de l'édition.* Paris: Promodis, 1986

BUCHAN, A. et al *Etudes sur le secteur du livre en Afrique. Rapport analytique.* Washington D.C.: World Bank, 1991

BUDE, U. *Culture and environment in primary education. The demands of the curriculum and the practice in schools in sub-Saharan Africa,* Bonn: German Foundation for International Development (DSE), 1991

CALVET, L.J. *Linguistique et colonialisme. Petit traité de glottophagie.* Paris: Payot, 1974

CALVET, L.J. *La guerre des langues et les politiques linguistiques.* Paris: Payot, 1987

CHAMBERS, R. *Développement rural. La pauvreté cachée.* Paris: Karthala, CTA, 1990

CHAMPION, J. *Langage et pédagogie en France et en Afrique.* Paris: Editions Anthropos, 1986

CHATRY-KOMAREK, M. Linguistische Faktoren bei der Erstellung von Schulfibeln in Vernakularsprachen. In: *Osnabrücker Beiträge zur Sprachtheorie,* No. 31. Osnabrück, 1985

CHATRY-KOMAREK, M. Consideraciones lingüísticas en torno a libros escolares en quechua puneño. In: *Revista Andina,* Año 4, No. 1. Cusco, 1986

CHATRY-KOMAREK, M. *Libros de lectura para niños de lengua vernácula. A partir de una experiencia interdisciplinaria en el Altiplano peruano.* Eschborn: GTZ Schriftenreihe No. 193, 1987

CHATRY-KOMAREK, M. Intentos de codificación del quechua en libros escolares. In: LOPEZ, L.E. AND MOYA, R. (Ed.) *Pueblos indios, estados y educación.* Lima, 1989

CLAS, A. *Guide de recherche en lexicographie et terminologie.* Paris: Agence de Coopération culturelle technique, 1985

COLOMBET, C. *Grands principes du droit d'auteur et des droits voisins dans le monde. Approche de droit comparé.* Paris: Litec, UNESCO, 1990

CONFEMEN. *Promotion et intégration des langues nationales dans les systèmes éducatifs. Bilan et inventaire.* Paris: Editions Champion, 1986

COULMAS, F. *Linguistic minorities and literacy: language policy issues in developing countries.* Berlin: Mouton Publishers, 1984

COULMAS, F. *Sprache und Staat. Studien zur Sprachplanung.* Berlin: W. de Gruyter, 1985

CROZIER, M. AND FRIEDBERG, E. *L'acteur et le système.* Paris: Seuil, 1977

CUMMINGS, W.K. *L'enseignement primaire à coût modique. Mise en oeuvre d'une innovation dans six pays.* Ottawa: Centre de recherches pour le développement international, 1986

DE LANDSHEERE, G. *La recherche en éducation dans le monde.* Paris: PUF, 1986

DREYFUS, J. AND RICHAUDEAU, F. *La chose imprimée.* Paris: Retz, 1985

DUPLAN, P. AND JAUNEAU, R. *Maquette et mise en page.* Paris: Usine Nouvelle, 1986

DURCHON, P. *Photogravure et impression offset.* Paris: Usine Nouvelle, 1987

ESCARPIT. *L'Ecrit et la communication.* Paris: PUF, 1973

FARRELL, J. AND HEYNEMAN, S. (Ed.) *Textbooks in the Developing World. Economic and educational choices.* Washington D.C.: World Bank, 1989

FERRY, G. *La pratique du travail en groupe.* Paris: Bordas, 1985

FINEL, G. AND SASSIER, D. *Un livre, des hommes. De l'auteur au lecteur.* Paris: Nathan, 1988

FISHMAN, J.A. Language modernization and planning in comparison with other types of national modernization and planning. In: *Advances in language planning.* The Hague, 1974

FISHMAN, J.A. Minority mother tongues in education. In: *Prospects, Quarterly review of education.* Vol. XIV, No. 1. Paris: UNESCO, 1984

FITOURI, C. *Biculturisme, bilinguisme et éducation.* Neuchâtel, Paris: Delachaux et Niestlé, 1983

FRIEDMAN, M. *Libertés et responsabilités des journalistes et des auteurs.* Paris: Centre de formation et de perfectionnement des journalistes, 1988

GLEICH, U.V. *Latin American approaches to bilingual/bicultural primary education. Theory* *and practice.* Eschborn: GTZ, 1986

GLEICH, U.V., WOLFF, E. (Ed.) *Standardization of national languages.* Hamburg: UNESCO Institute for Education, 1991

GREENFELD, H. *Bücher wachsen nicht auf Bäumen.* Munich: Ellerman, 1979

GROUPE DE LA CITE INTERNATIONAL *Le livre. Sa conception, sa réalisation. Documentation.* Paris, undated

GUDSCHINSKY, S. *Manual de alfabetización para pueblos prealfabetas.* Mexico: SEP/ Setentas, 1974

GUERY, L. *Précis de mise en page.* Paris: Centre de formation et de perfectionnement des journalistes, 1988

HAMEYER, U. *Vier Gesichtspunkte zur Förderung von Innovationsprozessen im Bildungssektor.* Kiel: IPN-Kurzbericht 14, 1978

HAMEYER, U. et al (Ed.) *Handbuch der Curriculumforschung,* Weinheim, Basle: Beltz, 1983

HAVELOCK, R.G. AND HUBERMAN, A.M. *Solving educational problems. The theory and reality of innovation in developing countries.* Paris: UNESCO, 1977

HEYNEMAN, S. P. et al *Textbooks and achievement. What we know.* Washington D.C.: World Bank, 1978

HUMMEL, C. *School textbooks and life-long education: an analysis of schoolbooks from three countries.* Hamburg: UNESCO Institute for Education, 1991

HUOT, H. *Dans la jungle des manuels scolaires.* Paris: Seuil, 1989

HEALTH LEARNING MATERIALS PROJECT *Guidelines on how to produce a manual.* Kathmandu: WHO-UNDP, 1988

KOMAREK, K. (Ed.) *La série Garabola. Dossiers I et II.* Eschborn, Antananarivo: GTZ, 1993

LAPOINTE, C. *Le livre du livre.* Paris: Gallimard, 1987

LEINO, J. *Theoretical background and development of instructional materials.* Helsinki: Department of Education, University of Helsinki, 1989

LE THANH KHOI L'enseignement en Afrique et le modèle européen. In: COQUERY-VIDROVITCH, C. AND FOREST, A. (Ed.) *Décolonisation et nouvelle dépendance. Modèles et contremodèles idéologiques et culturels dans le Tiers Monde.* Lille: Presses Universitaires

LEVY-RANVOISY, F. *Manuel de dessin pour communiquer avec une population non alphabétisée. La perspective orthogonale.* Paris: ACCT-Karthala, 1987

LOCKHEED, M.E. *Improving primary education in developing countries.* Washington D.C.: World Bank, 1991

MACPHERSON, J. AND PEARCE, D. *Publishing educational materials in developing countries. A guide to policy and practice.* Ottawa: Canadian Organization for Development through Education. London: Harold Macmillan Trust, 1990

MAGER, R.F. *Comment définir des objectifs pédagogiques.* Paris: Bordas, 1977

MAGER, R.F. *Comment mesurer les résultats de l'enseignement.* Paris: Bordas, 1986

MENZEL, W. (Ed.) *Fibeln und Lesebücher für die Primarstufe.* Paderborn: Schöningh, 1975

NEUMANN, P.H. *Publishing for schools. Textbooks and the less developed countries.* Washington D.C.: World Bank, 1980

NYSTRÖM, A. *Manual for the selection, the production and the evaluation of textbooks.* Paris: UNESCO. 1975

OAKESHOTT, P. AND BRADLEY, C. *L'avenir du livre: l'impact des techniques nouvelles. Etudes sur le livre et la lecture.* Paris: UNESCO, 1982

PEARCE, D. La producción de libros escolares en los países en desarrollo. In: *Perspectivas,* Vol. XIII, No. 47. Paris: UNESCO, 1983

PEARCE, D. *A guide to planning and administering government school textbook projects. With special emphasis on cost-reduction factors.* Paris: UNESCO, 1988

READ, A. *A guide to textbook project design and preparation.* Discussion Paper. Washington D.C.: The World Bank, 1986

RICHAUDEAU, F. *Conception et production des manuels scolaires. Guide pratique.* Paris: UNESCO, 1979

RICHAUDEAU, F. *Recherches actuelles sur la lisibilité.* Paris: RETZ, 1984

RICHAUDEAU, F. *Manuel de typographie et de mise en page.* Paris: RETZ, 1989

RUBIN, J. Textbook writers and language planning. In: *Language planning.* Rubin J. et al (Ed.) The Hague: Mouton Publishers, 1977

ROGERS, E.M. AND SHOEMAKER, F.F. *Communication of Innovations. A cross-cultural approach.* Toronto: Collier-MacMillan, 1971

SALBERG-STEINHARDT, B. *Die Schrift: Geschichte, Gestaltung, Anwendung.* Cologne: DuMont, 1983

SEGUIN, R. *L'élaboration des manuels scolaires. Guide méthodologique.* Paris: UNESCO, 1989

SEGUIN, R. *Curriculum development and implementation of teaching programmes. Methodological guide.* Paris: UNESCO, undated

SMITH, D. *Les problèmes économiques de l'édition des livres dans les pays en voie de développement.* Paris: UNESCO, 1977

SOW, A.I. *Langues et politique de langues en Afrique Noire.* UNESCO/Nubia, 1977

STAIGER, R.C. *The teaching of reading.* Lexington: UNESCO/Ginn, 1973

UNDP *Education and training in the 1990s. Developing countries' needs and strategies.* New York: Education Development Center, 1989

UNESCO *L'emploi des langues vernaculaires dans l'enseignement.* Paris, 1953

UNESCO *Design, development and evaluation of low-cost educational materials.* Bangkok:

UNESCO Regional Office for Education in Asia and Oceania, 1978

UNESCO *Low-cost educational materials, how to make, how to use, how to adapt.* (Vol. 1). Bangkok: UNESCO Regional Office for Education in Asia and Oceania, 1980

UNESCO *Educational development. A practical issue. Guide for the preparation, production and distribution of textbooks.* Paris, 1980

UNESCO *Expert meeting to review the worldwide position as refers to the results of activities relating to the use of the mother tongue as a medium of instruction.* Paris, 1982

UNESCO *L'ABC du droit d'auteur.* Paris, 1982

UNESCO *Production and distribution of textbooks. Report of a regional seminar on the production and distribution of textbooks and other related teaching/learning materials.* Bangkok: UNESCO Regional Office for Education in Asia and the Pacific, 1985

UNESCO *Les langues communautaires africaines et leur utilisation dans l'enseignement et l'alphabétisation. Une enquête régionale.* Dakar, 1985

UNESCO *Textbook and related teaching/learning materials for primary classes. A report of a sub-regional workshop on the development of systems and structures for producing textbooks and other related teaching/learning materials.* Bangkok: UNESCO Regional Office, 1985

UNESCO *Book production training course in Papua New Guinea.* Tokyo: Department of Education of Papua New Guinea, Asian Cultural Centre for UNESCO, 1987

UNESCO *Rapport mondial sur l'éducation 1991.* Paris, 1991

UNICEF *Communicating pictures in Nepal.* Kathmandu: National Development Service, 1976

UNSEL, S. *L'auteur et son éditeur.* Paris: Gallimard, 1983

VARGAS VEGA, R. *Materiales educativos y post-alfabetización.* Mexico: UNESCO, 1982

VESSILIER-RESSI, M. *Le métier d'auteur.* Paris: Bordas, 1982

WORLD BANK *Education in Sub-Saharan Africa. Policies for Adjustment, Revitalization, and Expansion.* Washington D.C., 1988

WORLD BANK World Development Report 1991. Washington D.C.

ZALTMAN, G. et al *Innovations and organizations.* New York: Wiley, 1973

Glossary

Attainment

The total of results obtained at a certain level in a given subject. In general, the education authorities attach great importance to attainment in the initial evaluation of the impact of a new textbook. These figures should, however, merely be taken as a rough indication as to the effectiveness of the book, and must be examined in more detail.

The evaluation of attainment is not in itself enough of a basis on which to revise a pilot textbook.

Author of School Textbooks

In the traditional publishing chain the author is responsible for providing texts.

In general these will be texts which address pupils (reading texts, exercises, captions for photographs or illustrations) and teachers (preface, presentation, table of contents, instructions and information on the cover of the textbook, as well as the entire teachers' guide and complementary didactic materials).

When the author does not have a good publishing structure behind him he may also have to assume certain editorial responsibilities, of a financial, technical, graphical and commercial nature.

Authorisation to Print

Authorisation issued by the education authorities to the authors to go ahead and have a given textbook printed.

Body Size

The size of a type character.

The size is expressed in points; by way of example the main body of the text of this book is printed in 10 point characters, while the chapter headings are printed in 22 point.

Character Count

Calculation of the number of characters and spaces in a text manuscript which allows one to calculate the approximate length of the text after typesetting and the number of pages in the book.

Character Spacing

The blank space between two characters within the same word.

The character spacing in a text may be normal, condensed or wide, and this choice has repercussions on the typographical readability of the text.

Copy

Typed text with instructions for typesetting and layout.

The authors should bear in mind the fact that the copy contains the complete, definitive text of the book, and should refrain from making their own corrections at a later stage, which always entail delays and additional costs.

Creating Words

Lexical additions to a language which can take the form of neologisms, or loan words from other languages.

In textbooks written in national languages which have not yet been adequately standardised, technical and scientific terms will have to be created; in the absence of an institute of applied linguistics, the authors will have to check themselves whether or not the technical terms they need already exist, and where none exist will need to create new words, and ensure that they can be disseminated so that they will be generally accepted and used.

Development

Link in the publishing chain.

During this phase the textual and graphic elements that will make up a page are produced and combined.

The term development is sometimes preferred to simply “writing” since it underlines the fact that during this phase not only are texts written, but a text-image unit is created.

Devising the Contents

Devising all texts to be included in a textbook.

For a reading book, this phase involves choosing and/or defining the attainment targets, identifying the subject matter to be covered, the mandatory steps to be respected and the arrangement of this subject matter within the book.

In developing countries the difficulties are increased by the fact that textbooks ought to correspond to the official curricula, while the work involved leads authors to examine or reconsider targets which deviate too much from the reality in the schools of the country, otherwise the product may be totally inappropriate before it is even printed.

During this phase it is important for authors to be able to judge how much leeway they have to move away from the official guidelines.

Devising the Form

Devising the physical aspects (format, number of pages, binding) and graphic features (type, number and size of illustrations, rough layout, type of printing) of a book.

It is crucial that the form be devised before the writing and illustration phases so that the texts and exercises can be produced to fit a pre-defined framework. The important of this work is, however, rarely appreciated by teams of publishers-authors, which accounts for the “home-made” appearance of some of their products, which is totally disproportionate to the high costs.

Distribution of Textbooks

Important link in the publishing chain. In many developing countries the distribution of textbooks to rural areas where the majority of the school population live is difficult, and thus often constitutes an education project in it own right.

Documentation Specialist

Person put in charge by the publisher of finding all the documents to accompany the texts of a book, and of checking them for pertinence and technical quality.

Double Page

Visual unit made up of the left-hand page, which will bear an even number, and the right-hand page which will bear an odd number.

The double page is the basic layout unit.

The layout artist assembles the pages two by two, arranging text and illustrations on the basis of a framework known as the grid, which covers the two pages at once.

Evaluation of a Textbook

All activities which aim to provide information about the way the textbook is used in classrooms.

When the evaluation phase is designed to provide information for the revision of the book in question it must not only determine the extent to which the attainment targets can be achieved with the help of the material in question, but must also give precise information as to what aspects of the contents, the physical form and the graphics must be revised.

Evaluation Grid

A research instrument which makes it possible to examine the contents and form of a textbook.

Evaluation grids are useful and should be used systematically by authors running a final internal check on their own manuscript.

They are not, on their own, enough to allow you to revise a pilot textbook and must be supplemented by other instruments (classroom observation, attainment tests, etc.).

Exercise Book

Didactic material considered appropriate or even indispensable for some subjects, such as learning to write. Exercise books are always expensive because they can only be used once.

Any decision based on the assumption that a set of materials must include an exercise book should be reviewed with great care by authors in developing countries.

Exercise-Image Unit

The contents and the form of an exercise.

In a good exercise, the contents and form will complement one another; the form can be a text-illustration, or may present the underlying mechanism of an exercise.

It is always a major challenge for textbook authors to develop exercises which allow for a strict progression of learning, ensure an agreeable visual effect and make the underlying mechanism transparent for teachers and pupils alike.

Feasibility Study

Study which precedes a textbook project and focuses not only on the demand for textbooks but also looks at the conditions in which the book is to be developed, produced and distributed.

No textbook project should be launched before a feasibility study has been conducted. Otherwise it is imperative for the preliminary research phase to include a study on the environment in which the books will be used.

Film

The reproduction of a document on a transparent film which will then be used to make plates.

Finishing

The step which transforms the printed sheets into a finished book.

Finishing work, which comprises mainly folding, gathering the signatures and binding, must be closely supervised by the publisher, or the authors, in order to ensure that all the work to date has not been in vain.

Folio

The page numbers in a book. The even numbers will be on the left hand page, while the odd numbers will be on the right hand page.

Graphics Dossier/File

All the graphics documents for a book to be printed.

For a textbook this will include not only drawings and photographs, but also hand-written models of writing in cursive style.

Grid

Document which lays down the margins and the basic structure of a book and which helps to typeset a manuscript precisely and to produce various models, and make-ups.

The stencil is an indispensable tool for books with a complicated layout, as textbooks generally are.

Hierarchy of Text

Order and classification of the different parts of a text.

When there is little publishing back-up the authors themselves will have to check the organisation of their texts, clearly indicating the level of titles and text blocks to ensure that the photocompositor can process them accordingly.

In a partly theoretical work, like a teachers' guide, the hierarchy of the texts is often particularly complicated to establish.

Imposition

Setting out the pages of the book on the sheet so that once the sheet is folded the pages will appear in the correct order.

Careful imposition can keep cost down by putting pages with colour illustrations together on one or two sheets thus limiting the number of sheets to be printed in two or four colours.

Initial Quotation

An estimate of the costs of printing and finishing a textbook, which the printer can draw up at the end of the conceptual phase. The initial quotation allows authors to compare the physical and graphic features they have planned with the budget available.

Innovation

Intentional transformation of an education system with a view to achieving the existing objectives or defining new, more appropriate objectives.

In a textbook project innovation is at the centre of all action and it is not easy to have it accepted. It concerns first and foremost the education authorities: the conception and execution of a project demands expertise and attitudes which are not always encouraged within a bureaucracy.

Innovation involves all those who are indirectly affected by the book: the curriculum unit, teacher training unit, field supervisors, i.e. animateurs, educational advisers and inspectors, as well as parents.

Innovation is naturally geared to the teachers, whose resistance to change is often exaggerated, since their work in the field often makes them excellent change agents.

Finally innovation concerns the authors who often become the locomotive of change. Their status as civil servants, their professional training, their integration in the system and their aspirations are often barriers to a frame of mind that welcomes innovations, without which, however, no transformation worthy of the name is possible.

Instructions for Teachers

Precise, practical instructions for teachers printed in the textbook itself or in the teachers' guide, to help them with every-day lessons.

Textbook authors who aim to provide teachers with an effective tool in this way, find themselves confronted by the problem of how to ensure immediate effectiveness without surrounding the teacher with repetitive and stupefying instructions, which will in the long run cramp his or her teaching style and prevent him or her from developing and being inventive.

The shorter the learning time available the more carefully planned lessons must be and the more acute this dilemma.

Job Envelope

All the text and graphics documents to be submitted to the printer so that he can print the entire book.

Some of these documents are submitted in their final form, while others are accompanied by precise instructions as to how they are to be processed (enlargements or reductions of illustrations for instance).

Language of Instruction

Language used as a medium of instruction.

Sometimes this is the mother tongue of the pupils, and sometimes it is another language of which they have a more or less good command.

During the feasibility phase of a textbook project it is absolutely crucial to determine which is the language of instruction.

Language Taught

A language which the pupils must learn as a subject in its own right. In most developing countries, pupils must learn a European language in their first few years of school.

During the conceptual phase of the textbook the authors must determine the grade as from which pupils learn this language and the amount of time accorded to it, so that they can determine how much time is left to learn the mother tongue.

Layout

Arrangement of the blocks of text and graphic elements on a page.

An examination of primary school text-books produced forty years ago shows that the layout is the one element which has evolved most in the course of time and which is thus the clearest sign of modernity. Today there can be no doubt that good layout is not a luxury but a necessity for a textbook. But it must play second fiddle to pedagogical and didactic demands, and it must stay within the limits of what is acceptable to the target group.

The layout of a textbook emerges little by little parallel to the content matter. It is still vague during the conceptual phase, becomes more definite during the writing phase and takes on its finished form just before the book is printed. It is up to the authors to ensure that it performs its primary task - to help learners.

Layout Grid

A grid for arranging the elements on a page in line with vertical, horizontal and diagonal axes.

Newspapers and journals often need complex grids; in spite of the relative simplicity of the layout of a textbook the elements should not be arranged by chance, but in line with a few major axes.

Layout Plan

Guide for the layout of the book being produced, double page by double page. The layout plan is prepared at the end of the conceptual phase and should show the contents of each page and the approximate layout of illustrations and text.

Letter Card

Piece of card on which one letter is printed. Letter cards are commonly used by teachers to develop analysis and synthesis skills when pupils begin to learn to read. They are useful and inexpensive.

Letter cards are only suitable for use by individual pupils when good storage facilities are available in the classroom.

Line Length

Length of lines of a typeset text, often expressed in millimetres.

A text is said to be justified when all lines are the same length; in a reading book for beginners the text is always justified at the left side only leaving the text unjustified right, which means that the lines are of different lengths. This avoids having to split words which would get in the way of the efforts of beginners to decode the text.

Loan

The act of one language borrowing an element from another language.

By extension, a loan word is a word used in a given language that has been borrowed from another language.

Manuscript

Hand-written document. By extension text written by authors and submitted to the publishing unit after typing.

National Language

The mother tongue of a social group which is generally dominated socially or politically by another group, which speaks a different language.

Most national languages have a difficult and hotly contested entry into schools. While recognising that they allow pupils to better assimilate knowledge, their detractors point out that they are not properly normalised and standardised.

Authors working on textbooks in national languages where this is the case should check the congruence of the alphabet, see that spelling and punctuation rules are respected and enrich the language by creating the technical and scientific terms they need.

Nationwide Introduction

Phase in the production of textbooks in developing countries.

In the typical production cycle, authors will produce a textbook which is then tested, evaluated and revised before a large run is printed and distributed to the various parts of the country for widespread introduction.

Non-Text Information or General Information

Texts which accompany the contents of a book.

These are texts which appear on the cover and the first and last pages of a book and give the reader general information.

In a textbook the authors must generally write these pages too. They must be written with particular care since they will be the visiting card of sorts of the book.

Official Approval

The official authorisation of the education authorities to use a textbook or other materials freely in schools.

When official approval is mandatory, as is the case in the Federal Republic of Germany, the titles thus selected are presented in a catalogue on the basis of which the education authorities, ad hoc committees and teachers can make their choice.

In pilot projects to produce textbooks in national languages, the education authorities often insist on checking to ensure that the particular socio-linguistic and socio-cultural features of the target group have been respected, to verify that the attainment targets are pertinent (i.e. that they do not deviate significantly from the official targets), and to ensure that an appropriate methodological approach has been adopted.

One-Teacher Schools

Schools where one teacher teaches all classes at primary level and also assumes the responsibilities of head teacher.

When the majority of the target group can be found in one-teacher schools the didactic materials produced must be geared as soon as possible to as independent a learning style as possible, which will allow the teacher to pay some attention to the other classes.

Pagination

The sequence of page numbers of a printed book.

Paper Wastage

Paper wasted due to a disharmony between the format of the book on the one hand and that of the sheets of paper and printing presses on the other.

Paper wastage should always be kept to an absolute minimum; in developing countries where the price of the paper may account for one-third or even half of the total costs of producing the book, this is all the more important.

Passed for Press

Authorisation issued by the publisher or the publisher-authors to the printer to expose the plates and print.

The blueprints must be signed to confirm that the assembly and the imposition are correct and that the work is ready for engraving.

Pedagogical Specifications

List of the most important pedagogical and didactic aspects to be taken into account in the materials to be produced.

In large publishing houses the Publishing Manager draws up the pedagogical specifications, which then constitute a detailed frame of reference for the authors.

In developing countries, this is rarely the case. It is almost always the authors themselves who draw up the pedagogical specifications on the basis of an in-depth analysis of the status quo.

Pilot Textbook

Provisional version of a textbook which is tested in a number of schools so that it can be analysed, and revised as necessary. In a developing country this phase should always last at least one academic year.

Preliminary Research

Important link in the publishing chain to produce textbooks in many developing countries.

Preliminary research is indispensable when the available data on the teaching and learning conditions are incomplete or unreliable.

Authors should carry out the lion's share of this work if not all of it, to ensure that they are in possession of all the facts, and to allow them to start work on the textbook on the basis of a common level of information. But, although they always bear the overall responsibility they will have to call on the services of specialists: a sociologist, a statistician, sometimes an anthropologist, an expert in teaching second languages if the project in question involves bilingual education and a linguist where textbooks are to be produced in a national language.

Preliminary Testing

Preliminary testing of the evaluation instruments in a smaller number of schools which are nevertheless representative of the conditions in schools in the country as a whole, before using them on a wider scale.

The attainment tests should always undergo preliminary testing and then be revised. When the technical and financial framework permits, the authors should conduct a second preliminary test if major revisions proved necessary.

Printer

The individual responsible for printing and finishing a book.

Each of the tasks performed by a printer to transform an imposition scheme into a finished product is either performed on the instructions of the publisher (e.g. purchase of paper, or choice of binding) or supervised by the latter (e.g. reading proofs before signing them ready for press, or checking the blueprints before marking them ready to engrave).

The printer should never be forced to take on tasks that are the responsibility of authors (correcting or completing texts) or of the illustrator (completing a page with illustrations), layout person or graphic artist (making typographical choices and deciding on layout).

Printing

Major link in the publishing chain.

Printing is not the sole responsibility of the publisher or the authors. But, during the conceptual phase it is up to them to ensure that the printing conditions are such that the work they plan can be effected at a later date (no 4-colour printing if the machines are not sufficiently precise, for instance). During the printing phase they are also responsible for checking that the results correspond to the terms of the contract with the printer.

Proof Reader

Individual whose skills and/or status is such that they can give textbook authors valuable suggestions or encouragement.

No publication should be printed until it has been screened by a number of proof readers. Time and energy are needed, however, to organise this phase, and textbook authors would do well to consider it a mini project in its own right.

Proofs

Provisional print-out of a text that has been set and composed by computer. Proofs must be re-read and corrected.

Publisher

Person who plans and directs the publication of a literary piece of work, and manages the promotion and marketing. In developing countries it is common for the publisher not to assume all the tasks within the editorial chain that would be the responsibility of a publisher in industrialised countries. This work is then distributed among the various other actors, and is often assumed by the authors alone.

Publisher-Author

Neologism which refers to the many individuals in developing countries who are incorrectly termed “authors”.

In addition to the writing work, publisher-authors take on a greater or lesser part of the work that would traditionally be performed by the publisher.

Publishing Chain

All operations involved in translating an idea into a book, and publicising this book.

In textbook production it refers specifically to all the operations taking place from the start of the publishing project until the pupils have the finished books in their hands.

Publishing Specialist

Manager or specialist involved in the publishing chain.

Large publishing houses have many publishing specialists with well defined roles. In developing countries the responsibilities of the various individuals involved are often modified, and it is common for authors to have to assume some of the responsibilities generally borne by the publisher.

When textbooks are being produced in a national language, a few more specialists are required. Teams of authors must often call on the services of anthropologists, sociologists, statisticians, linguists and/or experts in the teaching of a second language.

Ream

Package of 500 sheets of paper of the same format.

Recto

The right-hand page of an open book where the book has an odd number of pages. It is the page that one tends to see flicking through a book. The title of a book should always start recto, as should the chapters as far as possible.

Research Institute

Research or teaching centre which may be private or public.

In textbook projects for primary level it is a good idea to seek the support of universities and teacher training colleges, so that the workload of the authors can be lightened by delegating some research work and incorporating existing structures in a common project in this way.

In practice, however, the gulf that generally separates these bodies often makes cooperation an uncomfortable affair.

Resource Person

Individual who gives the authors detailed information, generally of a socio-cultural or socio-linguistic nature.

The resource person cannot be considered an author; he provides the information, but plays no part in devising or developing the textbook.

Revised Textbook

Textbook which has been revised after having been tested at a number of schools.

Only a properly revised textbook should be considered for a large run.

School Enrolment

The number of pupils attending school within one class, school or country.

Serif

Small horizontal, vertical or oblique line across constituent parts of the type.

In this guide, the main body of the text is printed in *Palatino,* which displays serifs, while the tables are printed in *Univers* which does not.

Set of Didactic Materials

All didactic materials devised and developed for one subject and grade.

The decision as to the composition of the set must always be well thought through and should depend not only on pedagogical and didactic considerations, but also take into account practical, logistic and financial considerations.

Sheet of Printing Paper

A large sheet of paper on which several pages are printed at once.

The format and the number of pages of textbook must correspond to the dimensions of the sheet to be used.

Signature

A collection of at least four pages, and more often 16 or 32 pages which are printed together on one large sheet of paper. The sheet is then folded several times so that the pages are in the correct order. A book is generally made up of several signatures.

Speaking and Listening

Sub-discipline of the “mother tongue”, in addition to reading and writing.

Survey Report

Document presenting the main results of preliminary research regarding the development of textbooks.

The survey report is not indispensable for authors who are able to start the conceptual phase on the basis of the data they have gathered, but it is important for the education authorities.

To prepare the ground for the new textbook, authors are recommended to prepare a survey report, or have this done, and to present it to the relevant authorities.

Teachers' Guide

Reference book for teachers.

The teachers' guide should always be part of a set of didactic materials; in some cases it can even replace the pupils' textbook.

The teachers' guide must offer teachers with a low level of professional training a supplement to their training and a sort of “script” with detailed instructions on how to conduct day-to-day lessons in a given subject.

The guide is the ideal vehicle for teaching innovations in developing countries, unlike industrialised countries, where innovation generally originates from research institutes and is circulated in specialised technical journals.

Technical Specifications

List of the most important physical and graphic aspects of the materials to be produced.

The technical specifications are generally drawn up by the Art Director, the Commercial Manager and the Production Manager. They are vitally important since they allow those in charge to check the feasibility of the production project: the printer prepares his quotation for the costs of printing and finishing on the basis of the technical specifications.

Testing Textbooks

Link in the publishing chain.

In developing countries the lack of reliable, complete data on conditions in schools and the heterogeneity of teaching and learning conditions make it vital to test the new textbook over a period of at least one academic year in a representative sample of schools.

Textbook Illustrator

Graphic artist who uses his skills to illustrate textbooks, complying with pedagogical, didactic, aesthetic and perhaps financial considerations. A textbook illustrator must work closely with the authors who are generally in overall charge of the illustration work.

Textbook Projects

Education project set up to supply text-books for a developing country.

Textbook projects involve either one phase in the publishing chain, such as large-scale production and distribution of existing books, or the entire chain from the feasibility study to testing, large-scale production, distribution and teacher training.

These projects demand human resources, technical inputs and funds and are often supported by bilateral or multilateral assistance.

Text Exercise

Exercise consisting solely of text, with no concrete or abstract illustration (diagrams, frames, etc.).

Text-Illustration Exercise

Exercise which is made up of a text and a graphics part.

In reading books for primary level these are useful to teach pupils to compose, complete or change words and sentences. There should always be at least one text-illustration exercise to lighten the extreme dullness of text exercises.

Text-Image Unit

The contents and form of a text.

In textbooks which address the primary level, and particularly in reading books, authors must not only devise and write good texts. They must constantly be alert to ensure that their texts lend themselves to illustration.

The interaction of the form and the substance allows the authors to achieve this best.

Time-Table

Official learning time.

Where several different time-tables exist side by side for pupils of the same grade, the authors' work is made more complex by the fact that they must develop one set of materials for all pupils, which will enable the different target groups to achieve the same attainment targets within the same time.

Two-Colour Printing

Generally black and a light colour, which may be printed in a solid block or screened to produce shading effects. The shades of colour thus obtained relieve the harshness of monochrome print, at a significantly lower cost than 4-colour (four-colour) printing.

Unformatted Typesetting

The typeset text is justified at the left-hand side, but comprises no hyphenation or layout.

This text constitutes the first set of proofs which must be re-read and corrected, before a second set of proofs is obtained, which will take the hierarchy of the text into account. In practice authors often by-pass these two sets of proofs, especially when they have access to a computer.

Weight

Thickness of the lines of a character.

A text may be printed in extra light, light, semi-light, medium, semi-bold, extra bold and ultra bold. Judicious use of these different weights can help underline the hierarchy of the text and enhance the typographical readability.

Width (of Characters)

The visible width of type character. The width of characters can be modified, to make them more condensed or more expanded, which has repercussions on the typographical readability of the text.

Word Card

Piece of card on which one word is printed. Word cards are commonly used by teachers to help pupils make up and change sentences. They are useful for pupils learning to read.

Word cards are only suitable for use by individual pupils when good storage facilities are available in the classroom.

Word Spacing

Blank space left between two words in a sentence.

Word spacing may be normal, condensed or expanded and the choice will have an impact on the typographical readability and the aesthetic quality of a text.

Marie Chåtry-Komarek has worked for more than fifteen years in Africa and Latin America on the production of school textbooks in national languages. In this book, she describes the work carried out by a German-Malagasy project, supported by the German Agency for Cooperation (GTZ), the objective of which was to provide teachers and students with textbooks in Malagasy, adapted to their specific needs. She has previously written about the systematic development of texts in *quechua* and *aimara* in a book in Spanish: *Libros de lectura - para niños de lengua vernácula.* At present she is preparing a book on the training of author-publishers of textbooks in developing countries.

The German Foundation for International Development (DSE) is an institution for the initial and advanced training of specialists and executive personnel from developing countries. In addition, it prepares German experts for their assignments in a developing country, and maintains the Federal Republic of Germany's largest centre for documentation and information on development policy.

The DSE works in the areas “Education, Science and Documentation”, “Economic and Social Development”, “Public Administration”, “Industrial Occupations Promotion”, “Food and Agriculture” and “Health”. Its objectives are an international exchange of experience and the qualification of specialists and executives from developing countries.

Dialogue and advanced training programmes (conferences, meetings, seminars, training courses, etc.,) support projects which serve economic and social development. The DSE thereby contributes to an effective, sustainable, and wide-ranging development process.

Since 1960 the DSE, in cooperation with national and international partner organizations, has given advanced professional training to more than 100,000 specialists and executive personnel from more than 140 countries. An increasing part of the programmes takes place in the developing countries, the rest in Germany.

The DSE makes its contribution to development cooperation on the basis of guidelines of the Federal government's development policy. The institutional contribution donor is the Federal Ministry for Economic Cooperation and Development (BMZ).

The DSE was founded by the Federal and Land governments in 1959 on the initiative of the political parties represented in the German Bundestag as a foundation under civil law. Its main seat is Berlin, and its other locations are Bonn, Bad Honnef, Mannheim, Feldafing, Zschortau, and Magdeburg.

Code Europe was established in Oxford as a UK charitable organization in May 1993 as part of the international CODE network which includes CODE affiliates in Canada, USA, and ten countries in Africa (Ethiopia, Ghana, Kenya, Mali, Malawi, Mozambique, Senegal, Tanzania, Zambia and Zimbabwe), and two in the Caribbean (Belize and Guyana). The overall CODE programme includes book distribution, library development, and support for indigenous publishing industries. As part of the worldwide CODE network, it represents the overall organization in Europe, and develops and manages projects in partnership with organizations in the developing countries. CODE Europe's *Partners in African Publishing Programme* aims to increase collaboration between publishers and organizations in Europe and Africa.

ISBN 0 9528651 0 6

A Guide to Creating Self-learning Materials

(GN1- 02)

DAN R. MINNICK

INTERNATIONAL RICE RESEARCH INSTITUTE

A Guide to Creating Self-learning Materials

(GN1-02)

DAN R. MINNICK

1989
INTERNATIONAL RICE RESEARCH INSTITUTE
Los Baños, Laguna, Philippines
P.O. Box 933, 1099 Manila, Philippines

1st edition, 1988.
2nd edition, 1989.

Correct citation:
Minnick, D.R. 1989. A Guide to Creating Self-Learning Materials. International Rice Research Institute. Los Baños, Laguna, Philippines.

Contents

FOREWORD

The International Rice Research Institute has published this *Guide to creating self-learning materials* to assist trainers and communicators engaged in transferring knowledge and information on rice.

One of IRRI's primary responsibilities is to train scholars from developing nations in the rice sciences. For more than two decades it has conducted a training program in fulfillment of that responsibility.

IRRI recognizes that constraints exist in training and communication because of the explosive progress in information on the one hand, and the inherent difficulties in cross-cultural communication on the other. Thus, it is advantageous to continuously develop and explore learning methodologies that complement the well-established instructional methods of lecture, seminar, and laboratory/practicals, to expedite learning and cross-cultural communication.

The self-study approach to learning changes the role of the trainer/trainee, by placing greater responsibility for the learning process on the trainee. The method is deemed appropriate for IRRI trainees, who are established junior scientists and professionals.

This two-part *Guide to creating self-learning materials* for both trainers and potential trainers has been prepared in response to a widely felt need. It is intended to help training and communication practitioners understand the merits and limitations of using self-learning materials, create quality self-learning materials suited to the trainees' needs, and manage the use of self-learning materials effectively.

It is hoped that this publication will serve to provide a means of transferring knowledge and information on rice.

KLAUS J. LAMPE
Director General

March 1989

PREFACE

The first question the reader of any book asks is, “Does it fit me and will the information satisfy my needs?”

In answer, let’s see what information is contained in this book.

WHAT this guide is about

Creating self-learning materials

This guide describes the concepts, principles, and processes used in constructing self-study training materials. However, before we go on, let’s look at the word “create” in the title, *A guide to creating self-learning materials.*

When designing quality self-study materials, it will be necessary to create nonverbal visuals as well as verbal communication. They will be valuable tools to assist learning. You can learn how to create these new learning packages, but it will require practice, patience, perseverance, and commitment.

WHO this guide is for - the intended users

Those who want to design self-study materials

Although you can use this guide by yourself, it is most effective during a workshop which allows practice, dialogue, and immediate feedback.

This guide is written for adults who have

- a BA or BS in a scientific or technical field,
- some teaching experience,
- training responsibility,
- little or no experience in instructional design and development, and
- a need and desire to develop self-instructional materials.

The guide assumes that you have had little exposure to the concepts and vocabulary of educational technology or psychology, but that you want to discover how people learn.

It will provide technology to help you conduct training by packaging and transferring information.

WHY this guide - a case history

A learning option

A training program

The International Rice Research Institute (IRRI) has more than 20 years experience in teaching people from developing nations about rice science.

One type of short-term training, from 2 weeks to 5 months, is called nondegree training. These courses about advances in rice technology update professionals from various nations.

The exercises that follow are practical, problem-solving, and field-oriented. The information is given through lectures; the medium of instruction is English.

An adjunct approach

The nondegree training courses faced certain problems. Because the courses were short and intense and the trainees had different levels of English skills, they needed a supplementary method of learning. In 1976, IRRI piloted the slide/ tape self-study option.

The system

- organized and sequenced the information,
- documented the lecture material in a written *and* pictorial format,
- enhanced oral an written English proficiency simultaneously,
- made information available at any time,
- packaged information so that instructors could transfer and use it in other training programs, and
- allowed the information to be readily translated into other languages.

Instructors used this important tool to train people from many countries. Its success was evident in the trainees' use of the programs at IRRI and the demand for training modules in other nations.

An increase in technology

Technology continues to increase and become more complex. As a result, it has become necessary to increase the number of training courses and programs. With this development comes the need

- for more self-study systems so that students can learn independently, and
- to adapt these learning packages so they can communicate with technology users in the different regions of the world.

If you think that this guide meets your needs so far, read on.

If you're not sure, read the introductory sections on content, objectives, and style.

If you don't think it meets your needs, please pass it on to a colleague who you think might be interested.

Training in self-learning methodology

To meet these demands, IRRI is expanding its instructional programs and training staff to produce self-learning messages.

Hundreds of conversations with trainers in developing nations show they need new training approaches and materials for adults. This handbook will help you develop autotutorial methods that introduce new training approaches.

ACKNOWLEDGMENT

The International Rice Research Institute wishes to thank the IRRI staff, the committee on nondegree education, academic council members, and educators throughout the world for their constructive comments and assistance in fashioning this publication.

Special acknowledgments are extended to Dr. Katherine Steele, Dr. Jeannine Webb, and Dr. M. M. Murphey of the University of Florida who encouraged the author in the pursuit of innovative instructional techniques contained in this book.

This manual is dedicated to you, if you find it useful; to the national staff of the Training and Technology Transfer Department; but especially to Dr. Robert N. Hurst of Purdue University who introduced the self-study concept at IRRI.

INTRODUCTION

New challenges and trends

Whether we like it or not, the world is rapidly advancing into a new era. This time in human history has been called the information revolution. It is a time of expanding population and communication. Information presently doubles within 7 to 10 years, and that time is decreasing.

This information explosion presents new challenges to those responsible for sharing information.

- To keep up, we must transfer more information to more people in less time.

- With advances in agricultural science and industry, information has become more technical and complex.

- To be useful in a world community, we must share information with cultures of different languages.

- To solve complex problems, we must find methods to increase communication between people of different disciplines.

- To prepare people for responsible positions in a technological society, we must transfer complex information to a younger population.

- At the same time, older adults must learn the new techniques so that they can keep up with technological developments.

Therefore, we must find new methods to share information.

One solution to information diffusion has two parts:

1. *Teach people to find information and teach themselves.*
2. *Prepare materials that will encourage people to teach themselves.*

This educational technology requires information preparation, packaging, and referral. These are the focus of this guide.

Parts of a self-study program

Objectives
Content
Feedback

Educational research shows that effective self-study material should include

- the standard of performance expected from the learners,
- information to be learned, and
- exercises that allow learners to evaluate their performance.

Therefore, this guide will teach you how to write

- learning objectives,
- a self-study program, and
- self-evaluation exercises.

The end product will be a self-learning package made up of these three parts.

However, in transferring technology, we often forget an important point. We need to explain why the technology has been successful and why people should adopt it. This explanation is important because scientific investigation convinces and motivates both trainers and trainees.

Therefore the guide also will

- explain the evolution of the scientific research that has led to this modern self-study instructional methodology, and

- introduce new vocabulary and concepts.

The content

Part I - Why

Two parts make up this book. Part I discusses some relevant theories and concepts related to autotutorial instruction as a learning method.

- Chapter 1 introduces the basics of communication. It presents a communication model that helps to explain what happens during information transfer.

- Chapter 2 contains a brief history of the learning theory, the evolution, and design of this methodology.

- Chapter 3 continues with a more detailed discussion of adult education.

- Chapter 4 highlights both the old concepts and the theory of whole brain learning.

- Chapter 5 explains the various learning styles.

Part II - How

Part II is the task-oriented part.

- Chapters 6 to 11 explain how to create autotutorial packages.
- Chapter 12 discusses how autotutorial programs are to be managed.

Style: a different approach

This guide differs from most manuals in several ways:

1. It has two distinct but related sections. One will tell you **why** we use the self-study option, the other will show **how** to design self-study materials. You can alternate between sections or use whatever sequence you like.

2. We designed the guide for self-study. Each chapter will contain objectives, topics to learn, and self-evaluation exercises so that you can measure what you learned. Read the objectives before and after you study the program.

3. Main points are accentuated and enclosed in frames or boxes.

4. The lessons also contain drawings and written information for you to read in sequence.

5. Lessons are written in a conversational tone.

If you want to begin by understanding the theory behind the creation of self-learning materials, how this methodology works and came to be, advance to Part I and read Chapters 1 to 5.

If you're not interested in theory and want to begin creating self-study materials, turn to Part II and read Chapters 6 through 12.

If you like to approach things in sequence, read Chapters 1 to 12.

If you're now sure you're not interested in any option, please give this publication to someone who might be. There's nothing as useless as an unused book.

PART I - A/I OR SELF-LEARNING INSTRUCTION AS A LEARNING METHOD: SOME RELEVANT THEORIES AND CONCEPTS

CHAPTER 1. The Communication Process

Objectives

The information in this chapter is not essential for you to create objectives and a self-study module, or write self-evaluation exercises. Nevertheless, it will help you attain the following objectives:

- Discuss the 5 parts of the communication model.
- List 2 primary methods of human communication.
- Relate 6 avenues of visual communication.
- Describe 2 channels used in verbal communication.

Remember each chapter has a self-study format with objectives, content, and self-evaluation exercises.

Objectives are the main points to learn. You may want to refer to them again after reading the chapter.

If you can now perform the objectives or want to create a module, go to page 100. Do you think you can answer the questions, but you're not sure? If so, turn to page 20 for a self-evaluation on the 4 objectives of this chapter.

Are you curious about the objectives? Do you want to learn more? Read on. Content comes next.

Berlo's Model

Let's first discuss a basic communication model called Berlo's Model. In doing so, let's use pictures. Pictures are important in the communication process because they help us visualize verbal concepts. As we talk about ideas, we often automatically fashion pictures in our minds relating the words to past visual experiences.

Pictures are important for storing and recalling information. So whenever possible, try to communicate visually as well as verbally. By doing this, you assist people to understand concepts. For instance, let's divide our communication model in 7 parts, corresponding to 7 steps.

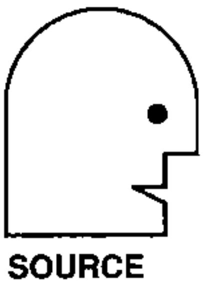

SOURCE

Part 1 is called the communication **SOURCE.**

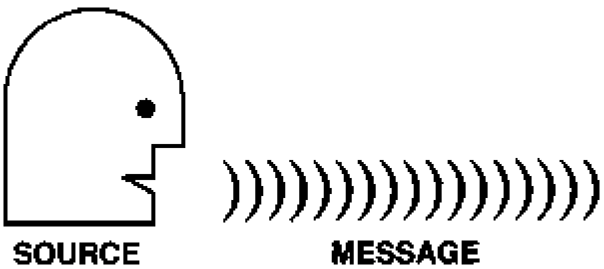

MESSAGE

Part 2 The source sends a **MESSAGE.**

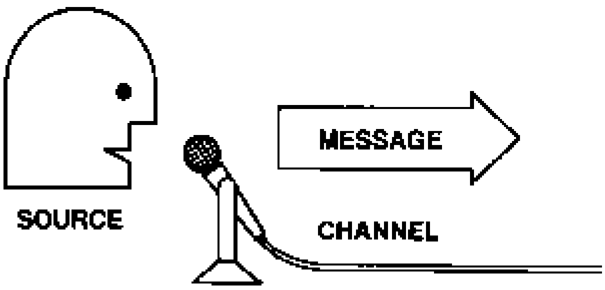

CHANNEL

Part 3

The source sends a message by some **CHANNEL** or communication method, such as a microphone.

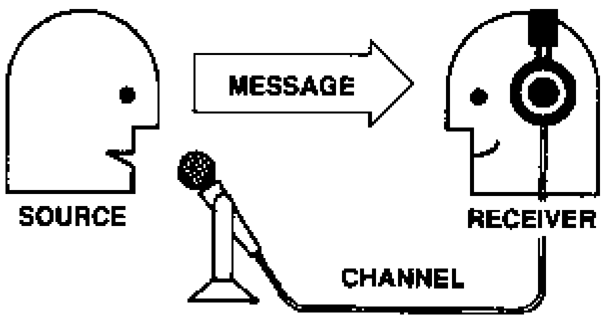

RECEIVER

Part 4

The source sends a message by this channel to a **RECEIVER.**

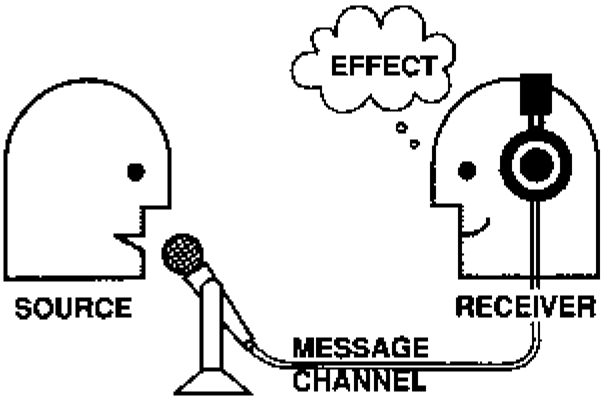

EFFECT

Part 5

The source sends the message by some channel to the receiver to produce some **EFFECT** or change in behavior.

Now let's put these components together and diagram our model.

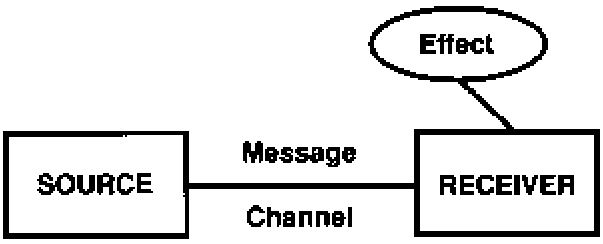

For example, this guide is a **source** to convey a **message** about self-learning methods through a print/picture **channel** to you, the **receiver,** to produce a change or **effect** in your behavior.

Although Berlo, a communication expert, did not develop all parts of the model, people refer to it as *Berlo's Model.*

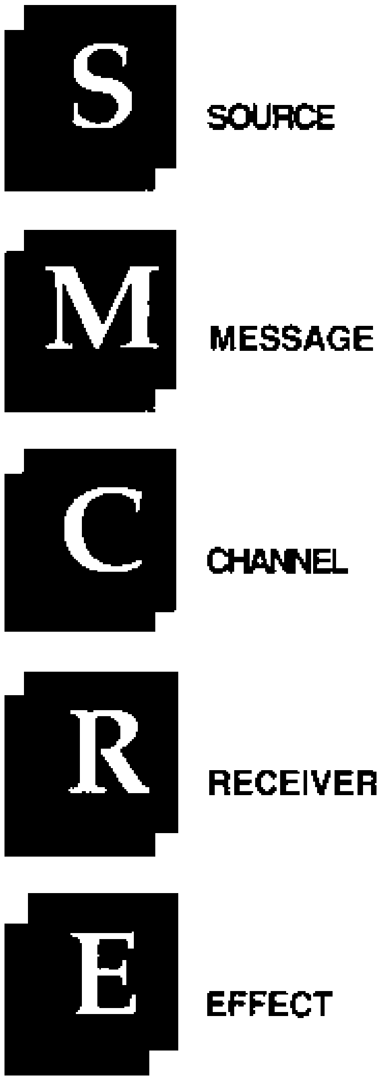

Many communication professionals also refer to the process as SMCRE which stands for source, message, channel, receiver, and effect.

However, when using this acronym, there's one more extremely important step in the communication process that's left out. In fact, effective dialogue and group communication is impossible without FEEDBACK.

For this reason, let's add another important step to our model.

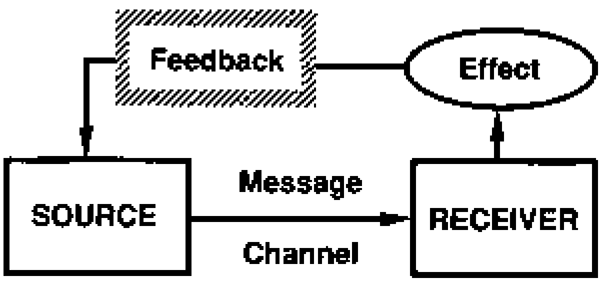

FEEDBACK

Part 6

FEEDBACK is an important product of the communication process.

Feedback from student questionnaires and tests is an important part of designing self-study instruction. Feedback tells you (the source) how effective the selected message and channel are upon the receiver. It allows you to adjust the communication process so that it is more effective. Let's add another step to the model.

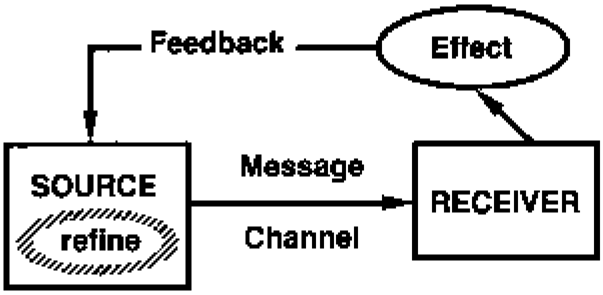

REFINED MESSAGE

Part 7

REFINE the message.

Conversation or dialogue is stimulating communication because the model constantly rotates between two people. It is an active participation process.

One challenge you face when designing self-study instruction is to build in active student participation and feedback.

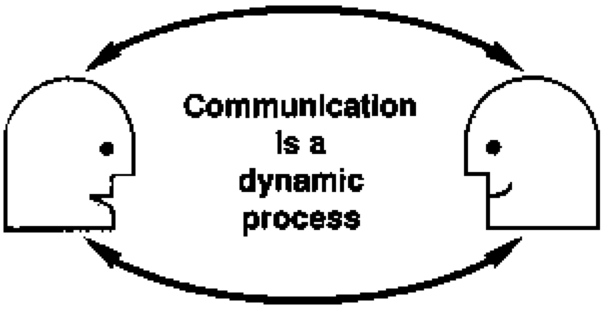

Communication modes

Humans have two primary modes or means of communication, **nonverbal** and **verbal.**

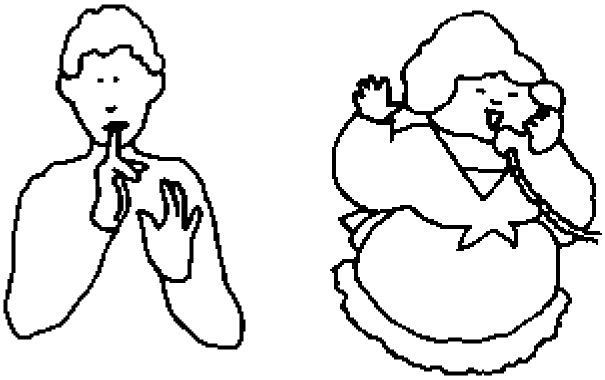

Nonverbal

Nonverbal pictures are a very powerful tool in the communication and learning process. Even verbal communication depends on the arrangement of the conceptional building blocks of letters... words ... sentences.

The sense of vision, the major nonverbal communication vehicle in humans, is responsible for more than 80% of learning. Nonverbal communication is powerful.

Some of the more important nonverbal visual channels used to communicate are the following:

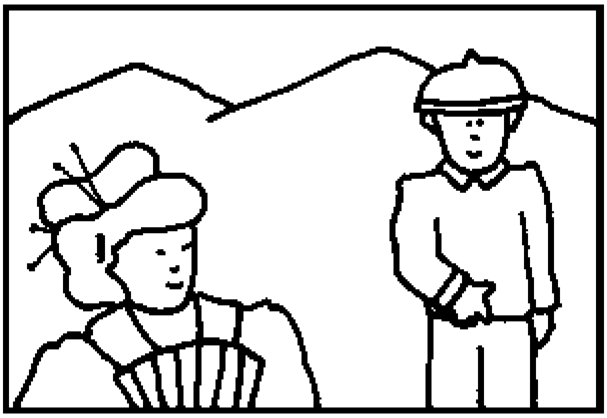

DISTANCE

• **Distance,** particularly human distance or our proximity to one another, has culture-bound meanings.

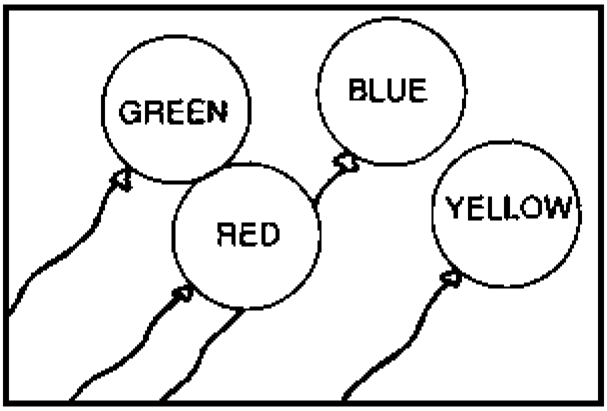

COLORS

• **Colors** evoke certain responses and emotions depending on the culture:

white >>> cool, red >>> hot, blue >>> sad.

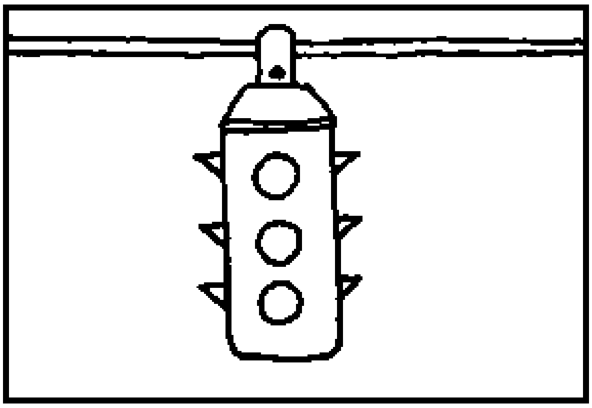

LIGHTS

• **Lights** are used as signal devices, guides, warnings, and announcements.

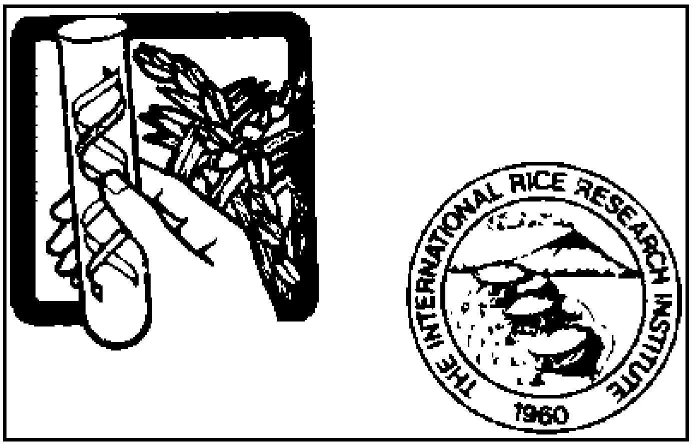

PICTURES

• **Pictures** include art, logos, and other designs used to communicate messages. "A picture is worth a thousand words."

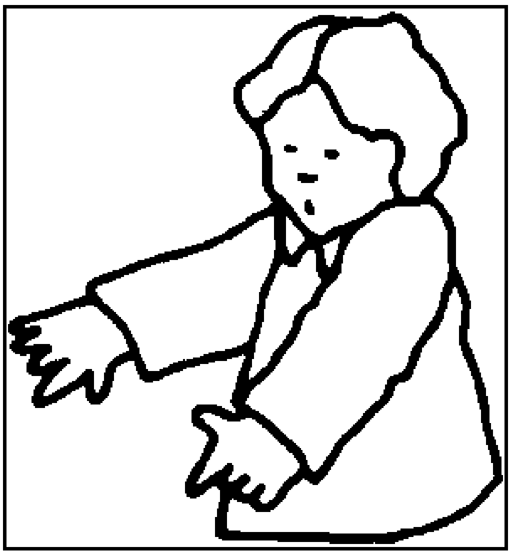

GESTURES

• **Gestures** are an important part of oral communication.

DRESS

- **Dress** (uniforms, jeans, native costumes, heels, necklaces, rings, ties, hair, and other attires and accessories) communicates a message.

Other nonverbal senses such as smell, touch, and taste contribute to communication especially in lower animals. But the sense of vision is especially important in nonverbal communication of humans and higher animals.

Verbal

And then, somewhere in time, came words, meanings, and languages. It's estimated that there are more than 70,000 different languages and dialects in the world. However, all communicate verbally in just two methods.

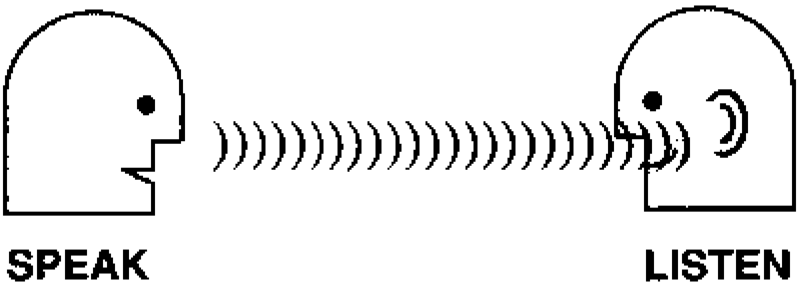

ORAL MESSAGE

Method 1. A source sends a message to the receiver by speaking; it is received by listening.

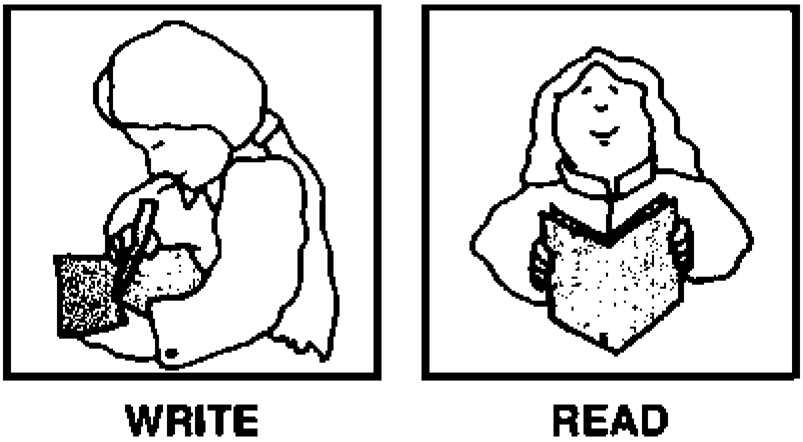

WRITTEN MESSAGE

Method 2. A source sends a message to the receiver by writing; it is received by reading.

A Summary

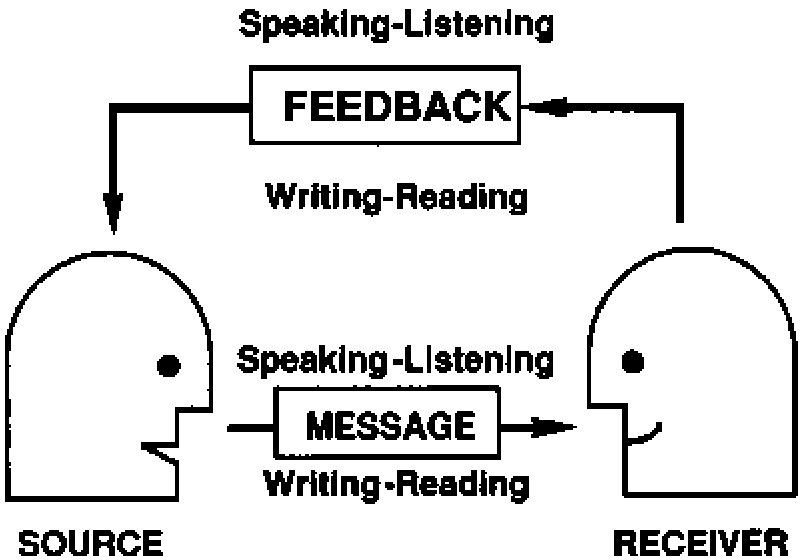

Of course, feedback in our communication model may also have two methods of verbal communication.

Speaking of feedback, it's time for a feedback exercise. This manual has been the **source** in a communication process. The **message** has been about the communication model. We have communicated to you, the **receiver,** through both verbal and nonverbal **channels** to produce an **effect.**

Did this communication process cause an effect in you? Did it cause you to learn? Only **feedback** can tell us the effect of our message.

Feedback exercise

Answer these questions to evaluate your learning so far.

- Diagram and label Berlo's Model.
- List the 2 primary communication channels in humans.
- List the 6 channels of nonverbal communication.
- List and discuss the 2 interactive channels of verbal communication.

Answers to feedback exercise

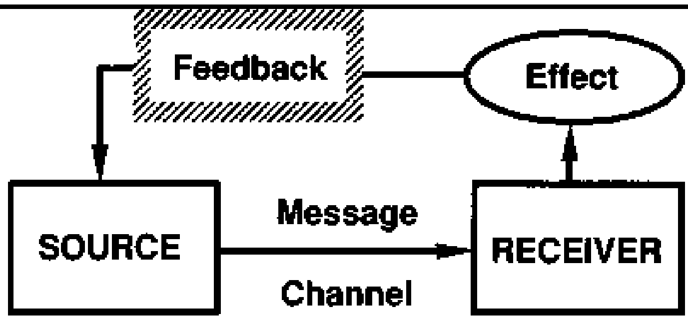

• gestures or body language; nonverbal/verbal

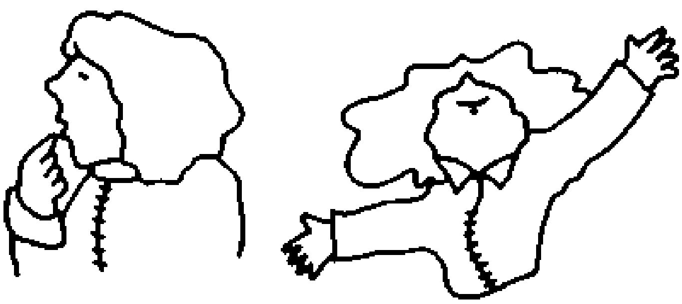

• distance, colors, lights, pictures, gestures and dress
• spoken/listening: source speaks, receiver listens
written/reading: source writes, receiver reads

We hope that you answered all the questions correctly, because the objective of this chapter is to effectively communicate these principles to you, the receiver. If you missed a question, there was a breakdown in the model.

By design, the chapter was very short. There was little repetition of concepts and no participation until the very end. Thus, we omitted two important learning tools: **repetition of material** and **immediate feedback.**

More on this in our next chapter, *Self-study option: how it got started, what it can do.*

References and information of interest

Berlo D K (1960) The Process of communication. Holt, Rinehart and Winston, New York.

Brislin R W (1981) Cross-cultural encounters: face to face interaction. Pergamon Press, Inc., New York.

Geschwind N (1979) Specialization of the human brain. Pages 108-117 *in* The brain. W. H. Freeman and Co., San Francisco.

Hall E T (1959) The silent language. Doubleday and Co., Garden City, New York.

Hall E T (1969) The hidden dimension. Doubleday and Co., Garden City, New York.

Hindhawa B S, Coffman W E (1978) Visual learning, thinking, and communication. Academic Press, New York.

Laborde G Z (1984) Influencing with integrity. Syntony Publishing, Palo Alto, California.

McQuail D, Windahl S (1981) Communication models. Longman, London.

Mag-uyon M (1976) Communication for effective extension work. Department of Development Communication, University of the Philippines at Los Baños, Laguna, Philippines.

Rogers E M (1983) Diffusion of innovations. The Free Press, New York.

CHAPTER 2. The Self-study Option: How It Got Started, What It Can Do

How did self-study start? What kinds are there? What can they do? We'll talk about those topics in this chapter. If you're more interested in how to begin designing a self-study project, skip this and the next three chapters and start with Chapter 6.

BUT, you will find this chapter extremely valuable in focusing your goals and justifying your project to YOURSELF, YOUR STUDENTS, and YOUR MORE CONVENTIONAL COLLEAGUES.

When talking about new ideas, skeptics will repeatedly ask you for facts and reasons for changing your methods. That's why we'll talk about theory as well as process.

To be prepared for these questions, you will need facts as well as a desire to create autotutorial programs. The facts will allow you to answer questions and increase your credibility as you share new learning techniques with others.

Objectives

After you finish reading this chapter, you should be able to

- Distinguish between tutorial, audiotutorial, and autotutorial instruction.
- Discuss the development of the autotutorial approach as a teaching method.
- Relate and distinguish between autotutorial research terms and methods
  - programmed instruction

- audiotutorial instruction
- personalized instruction

• List and describe 4 principles of programmed instruction.

• List the 4 major reasons why students like self-learning instruction.

• Compare the efficiency of self-learning instruction and lectures.

• Compare the cost of autotutorials and lectures.

• List and discuss 10 advantages of learner-driven instruction.

• List and discuss 4 major drawbacks of using autotutorial instruction.

• Explain how the instructor can overcome these drawbacks of autotutorial instruction.

• Explain the teacher's new role when using the self-learning approach.

• Define hardware, software, and courseware.

• Describe how students compare autotutorial and lecture methods.

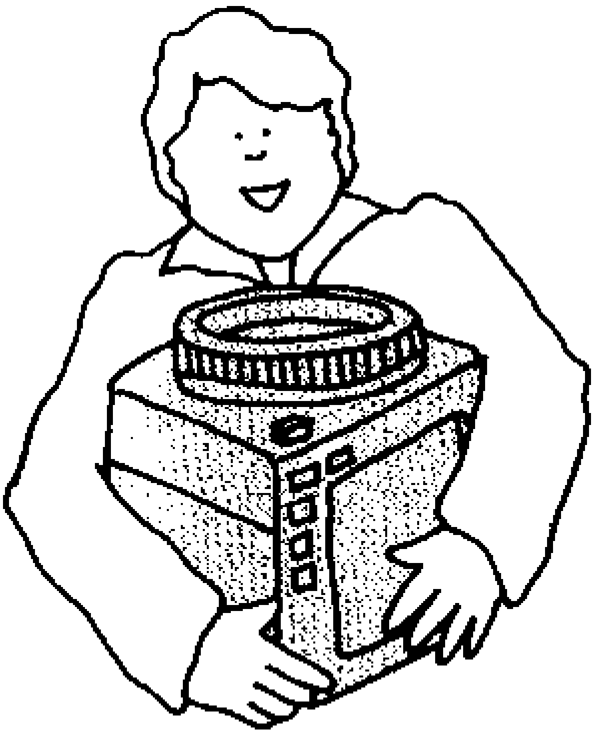

You can see there's a wealth of information in this chapter. We have condensed it to give you an overview and insight but save time. Refer to the list of references at the end of this chapter if you want more information.

Tutorial, audiotutorial, autotutorial

What's the difference between these three kinds of instruction?

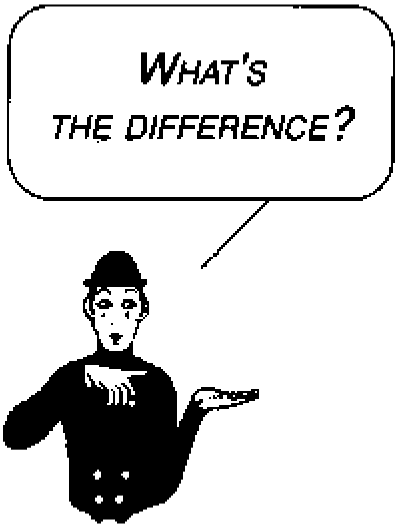

Tutorial instruction generally means one-to-one teaching with a private teacher.

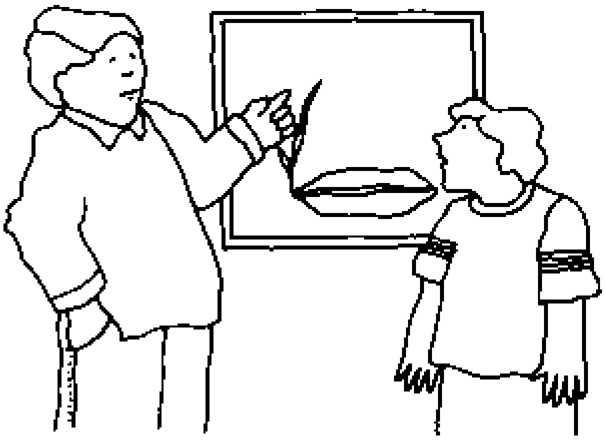

Audiotutorial (A-T) literally refers to using sound, usually a tape recording, as a private teacher. However, you will soon see that A-T can use much more than sound.

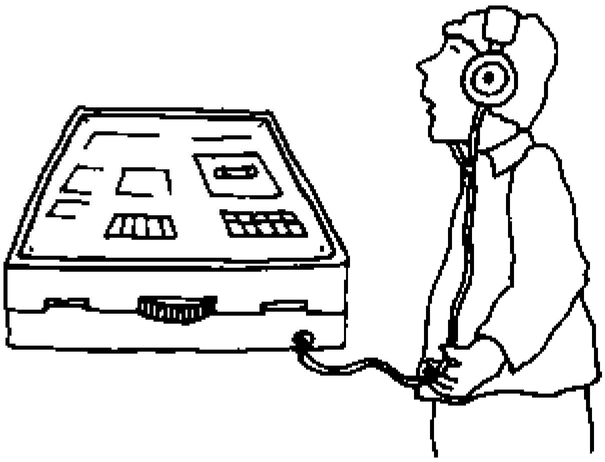

Autotutorial means learning materials that allow students to teach themselves. They may include any medium such as print, sound, pictures, slides, or television.

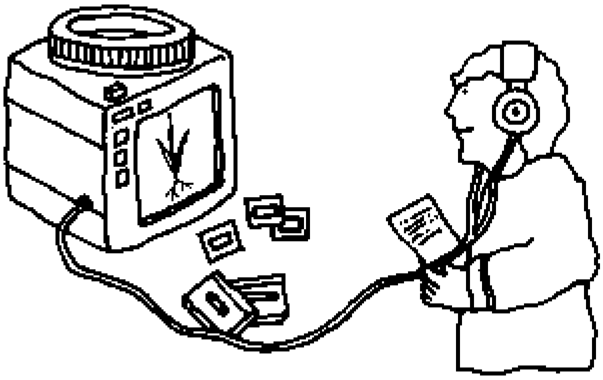

How autotutorial learning developed

STIMULUS/RESPONSE (S-R)

Much early research on learning involved the behavior of an organism, usually a small animal, in response to some stimulus such as food, shock, or light. Theories from this research were known as **stimulus/response,** abbreviated as **S-R**.

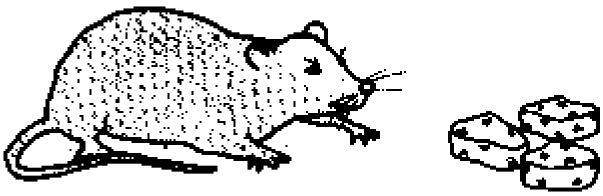

OPERANT RESPONSE (OR)

In the late 1930s, B. F. Skinner, a psychologist at Harvard University, started investigations to learn what animals (rats and pigeons) would **do** to receive a reward. Because some experiments required the animal to operate a bar, disk, lever, or similar apparatus, it became known as the **operant (conditioning) response** or **OR** theory.

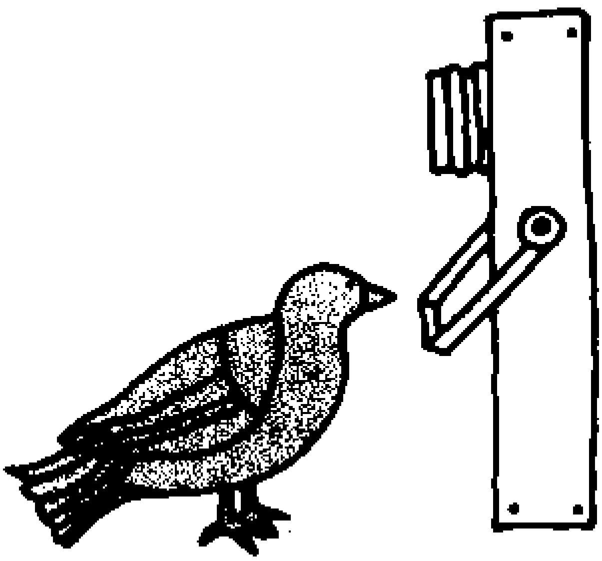

Those who advocated these theories were referred to as the *behaviorist* school in psychology, because they were interested in **external behavior** or **responses.** Although tutorial or individual instruction had always been prevalent as a learning method, this new behavior research helped develop new learning principles applicable to tutorial and especially autotutorial instruction.

The research showed that through a stimulus (reward), an animal could learn a behavioral program. It was possible to teach pigeons to hop up and down twice, turn around three times, and flap their wings before they received their reward.

PROGRAMMED INSTRUCTION (PI)

The learning principles from these experiments eventually became known as **programmed instruction, PI.** Skinner characterized PI as having

- small steps or units of content to be learned,
- active student involvement,
- immediate feedback,
- positive reinforcement, and
- self-pacing.

Elementary schools in the United States began using this personalized PI concept in the early 1950s, and it gained wide acceptance.

AUDIOTUTORIAL (A-T)

In 1961, PI graduated from the elementary schools and went to college. Dr. S. N. Postlethwait used the PI principles in an **audiotutorial** mode (**A-T**) to supplement a beginning botany course at Purdue University. He centered personalized learning in a self-study desk or carrel. The materials consisted of

- learning objectives,
- a programmed audio tape,
- printed study guides,
- visual aids,
- actual biological specimens, and
- a tutor for personalized instruction.

The method quickly gained international recognition. Today, a formal definition of A-T includes all of these elements.

PERSONALIZED SYSTEM OF INSTRUCTION (PSI)

Also in the 1960s, Dr. F.S. Keller, a psychologist at the University of Brazilia in Brazil, developed a similar approach to teaching science courses. He referred to his autotutorial packages as a personalized system of instruction or **PSI.**

PSI, or the Keller packages, contain

- primarily written instructional material,
- self-paced lessons,
- explicit objectives, and
- feedback evaluation.

The Massachusetts Institute of Technology (MIT) in the U.S. used PSI successfully in a beginning physics course, and the method gained international recognition in science instruction.

A module

Do you remember the parts of our autotutorial package in the Preface and Chapter 1? They came from this list. The standard for a module consists of these 9 parts advocated by the CUEBS.

Since then, the modular or programmed autotutorial instructional approach has gained recognition as a viable option in the instructional process.

As a result, a group of distinguished educators, the Commission on Undergraduate Education in the Biological Sciences (CUEBS), published guidelines for modular instruction. They include

- a statement of purpose,
- entry or prerequisite skills,
- instructional objectives,
- a pretest,
- implements (equipment, supplies),
- the program (printed A-T),
- related or repetitive experiences,
- a post-test, and
- assessment by student peers.

Summary

Two models of successful programmed instruction at the college level are Postlethwait's A-T and Keller's PSI.

An educational commission of the Biological Sciences has advocated 9 guidelines for modular instruction. Can you name them? If not, look again.

Questions about self-learning instruction

There are three major questions you'll want to answer about self-learning or autotutorial instruction:

1. How effective is the autotutorial method as compared with the lecture?
2. How much does it cost?
3. What are its advantages and disadvantages?

How well does it teach?

Effectiveness
Cost
Advantages/Disadvantages

One of the most favorable aspects of self-learning instruction is student acceptance. Student questionnaires show that they overwhelmingly prefer autotutorial instruction to lectures as a means of inputting information. Some studies show acceptance as high as 97% in favor of self-learning instruction. Students say they like it because of

- a feeling of self-sufficiency in learning,
- self-pacing and freedom from rigid time constraints,
- active participation in the learning process, and
- better organization of material.

In western cultures, 15% of students will be extremely positive, 15% will be extremely negative; but 85% prefer this method to lectures. Those with negative feelings say that autotutorial instruction is extremely inhuman.

Student performance on written content exams confirms that autotutorial instruction is equal to, and in most cases superior to, the lecture method. There are indications that autotutorial methods may be vastly superior to lectures in long-term recall of content. We need more research in this area.

Summary

Most students prefer autotutorial instruction to lectures. Those who don't, feel very strongly about their objections. Autotutorial instruction is equal to, and in most cases superior to, the lecture.

How much does it cost?

Cost depends on the medium you use. If you use a print/picture format, it can be relatively cheap. Graphics or pictures can consist of rough but informative sketches on inexpensive paper stock. You can print the autotutorial message by hand. You do not even need a typewriter, only a pencil, paper, and creativity.

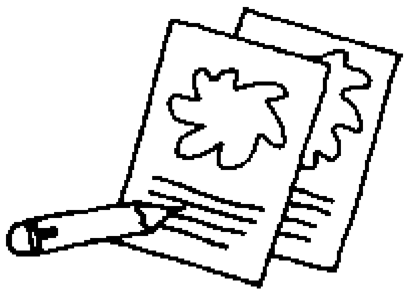

However, if you want to use computer-aided instruction (CAI), the machine alone will cost hundreds of dollars.

Let's pause here for more explanation.

Hardware, software*.* Much self-learning instruction is created to be used on teaching machines. The machines are slide/tape devices that show a slide and play a tape at the same time. They look like a small TV screen. Many are capable of automatic slide-tape synchronization.

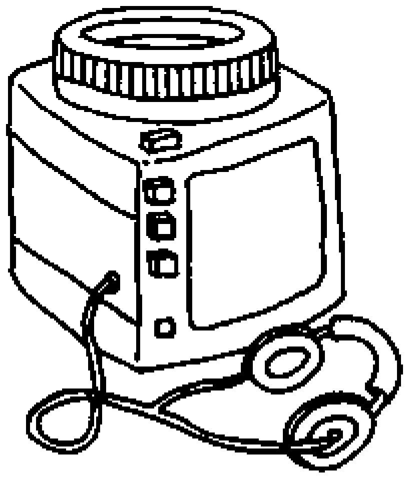

There are other programs which need only a tape recorder. The most recent autotutorial approach uses the computer where verbal and graphic messages appear on a TV screen.

The machines or equipment to run these programs are called **hardware.** The programs that run on these machines are called **software.**

Even though some software programs have very attractive presentations, it's important to remember that you can create effective programs without using expensive hardware and software.

A-T costs*.* However, cost evaluation of slide/ tape lessons show the autotutorial method to be economical as compared with conventional instruction. Initial costs are extremely high and the break-even point is about three years.

The initial investment is mostly in human resources to document, organize, and implement the programs for graphics, photography, and audio personnel. Hardware and space are another major investment. If you can purchase instructional software directly, it is even more economical. Then you eliminate expensive development costs.

Major publication companies are increasing their range of slide/tape, video, and computer programs for sale.

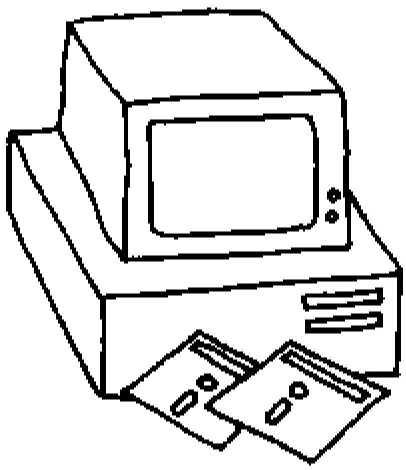

Most university autotutorial designs and products deal with science and technology.

As you look for educational technology aids, remember that many educators refer to instructional materials as **courseware**. They often call autotutorial materials or software a courseware package.

What are the advantages and disadvantages of the autotutorial?

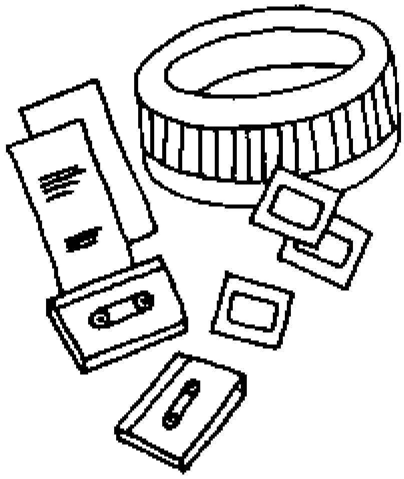

Its *advantages* are

- Students are **active** rather than passive in the learning process.
- Students control the **pace** of learning.
- Students control the **time** and **interval** of learning. The program is available when students want it.
- Content is tightly **organized.**
- Students are **responsible** for their own learning.
- **Repetition** of content material is possible.
- Students can **skip** familiar information and concepts.
- The frame format of documenting material content and sequence facilitates **peer review.**
- Module documentation can be treated as **creative works** and scholarly publications by the academe, much as chapters in a book.
- Materials are **exportable** for use at home and for sharing with other institutions.
- Students can **explore** materials on their own, because they are self-learning and independent of a teacher.

Its *disadvantages* are

- Some students feel **isolated.**
- Students with extreme negative feelings say autotutorial instruction (especially machine taught) is **inhuman.**

• Autotutorial methods make it more difficult to **emotionally motivate** students.

• It is harder to show **attitudes** about content.

• **Immediate feedback** or question periods may not be available.

However, a new active role by the instructor can overcome these drawbacks.

The new role of the teacher

Manager
Designer
Facilitator
Counselor

In the old lecture role, the lecturer/teacher is a broadcaster of information, sometimes a performer or entertainer.

The role of a teacher using self-learning instruction is entirely new. It is that of a **manager** and **facilitator.** The teacher acts as a resource person, a humanistic tutor that diagnoses, prescribes, and motivates an individual or small group. Students still need the teacher, but the teacher's role is different.

The instructor's first task in this new role is to create or design autotutorial instructional software or materials for the student.

The second part is the shifting of roles from that of a teacher to that of a tutor. By moving the primary teaching of *content* information to the software package, the teacher can now concentrate on the new dimensions of student *attitudes* and *problem-solving.*

Teachers can now direct creativity into designing and guiding instruction in a humanistic, individual manner, by being an education or learning counselor.

Autotutorial Instruction (A/I): our working definition

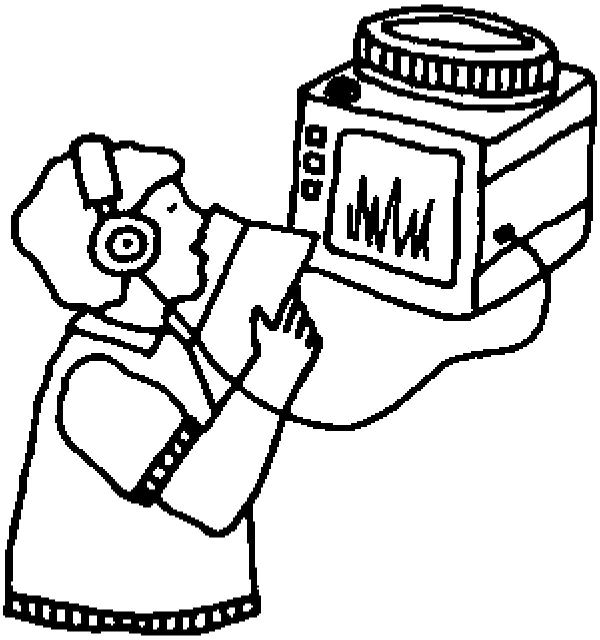

After looking at the research history, concepts, and principles of autotutorial instruction, it's time to formulate a working definition.

For our purposes it will involve 8 concepts:

1. It will be self-study.

2. It will be a module in that it will have

   • performance objectives,
   • a self-learning program, and
   • feedback or self-evaluation exercises.

3. The feedback exercises will be related to the objectives.

4. The self-learning program will consist of small learning steps or frames.

5. The steps will contain visuals, such as graphics, pictures, or specimens.

6. The script will be in print and on tape.

7. It will be self-paced for individual instruction.

8. The instructor will be an information counselor.

A/I

We will call the courseware Autotutorial Instruction as it will prevent confusion with the A-T acronym.

In the next chapter, we will get to know a new learning philosophy that is changing training methods. In fact, it is one of the reasons for this guide, because self-learning materials are essential in implementing the training methods that are part of this new learning philosophy.

The following feedback exercise will help you review this material. You may also want to review certain parts of this information periodically as you create your A/I program. Perhaps, you can list those pages for future referral.

Feedback exercise

• Define autotutorial.

• The Behaviorist School first developed:
(Check one).

_____ A-T
_____ A/I
_____ PSI
_____ PI

• Place the following acronyms associated with autotutorial instruction in their order of discovery (Sequence by number).

_____ OR
_____ Tutorial
_____ PI
_____ A-T
_____ SR

• There are 4 principles associated with PI. List and define two.

1. __________. __________
____
2. __________. __________
____

• What 2 A/I models are associated with university instruction? (Check two).

_____ PI
_____ PSI
_____ OR
_____ A-T
_____ SR

• Which of the above is also called the Keller Plan?

____

• One element of Postlethwait's audiotutorial model was use of the speaking/listening communication through the use of audio tapes.

List 5 additional components.

1. ______________________________
2. ______________________________
3. ______________________________
4. ______________________________
5. ______________________________

• In what major component do PSI and A/I differ?

____
____

• Most autotutorial instruction is received favorably by students. What are some of their reasons? (Give four).

____
____
____
____

• Most objective comparisons of the lecture and autotutorial methods revealed which to be vastly superior? (Check one).

_____ Neither one vastly superior
_____ A-T
_____ Lecture
_____ Almost similar

• Is A/I cost effective? (Check one).

_____YES _____NO

• How long does it take to break- even in an A/I investment? (Check one).

_____ one year
_____ two years
_____ three years
_____ four years
_____ five years

• List 5 advantages and 2 disadvantages of A/I (Answer briefly).

Advantages

1. ________________________________
2. ________________________________
3. ________________________________
4. ________________________________
5. ________________________________

Disadvantages

1. ______________________________
2. ______________________________

• Describe, in your own words, the role of an A/I teacher.

____
____
____
____

• Identify which of the following are hardware and which are software. (Write H for hardware and S for software.)

_____ paper
_____ slide
_____ computer
_____ video cassette
_____ computer disk
_____ projector
_____ videotape recorder
_____ pencil

• The working definition of A/I advocated in this guide has 8 concepts. Fill in the missing concepts in the list.

1. self-instruction
2. ______________________________
3. feedback exercises in pace with performance objectives
4. ______________________________
5. nonverbal communication through pictures, visuals
6. verbal learning through tapes
7. ______________________________
8. ______________________________

• Define performance objective.

____
____

Answers to feedback exercise

• individual or small group instruction

• PI

• Tutorial, S-R, OR, PI, A-T

• small steps in learning
active participation in learning
immediate positive reinforcement in learning
self pacing in learning

• PSI, A-T

• PSI

• 1. objectives
2. printed study guides
3. visual aids
4. hands-on work with actual specimens
5. a tutor or assistant

• PSI mostly written channel
A-T mostly audio channel

• self-sufficiency
self-pacing
active participation
organization of material

• neither - none is vastly superior; A/I as good as lecture or slightly better

• yes

• three years

• Advantages of A/I:

- active learning process
- pace student-controlled
- time and interval of study student-controlled
- information super organized
- student responsible for learning
- repetition of material possible
- option of skipping familiar material
- facilitates peer review
- documentation a creative work
- material exportable
- random exploration of concepts available

Disadvantages:

- feelings of isolation by some students
- to some students, machine teaching is inhuman
- conveying attitudes difficult
- ineffective in affective attitudinal domain
- immediate feedback difficult

• The A/I teacher is

- a facilitator and manager

- a humanistic empathizer and counselor in the learning process
- a tutor
- a courseware designer

• S, if programmed
S
H
S, if programmed
S, if programmed
H
H
H

• - modularized with

performance objectives
autotutorial program
feedback exercises

- increment learning steps
- self-paced
- altered instructional role

• learning goal; or student/teacher learning contract

References and information of interest

Anderson C (1969) Current research on instruction. Prentice-Hall, Inc., Englewood Cliffs, New Jersey.

Bigge M L (1964) Learning theories for teachers. Harper Row, New York.

Brewer IM (1974) Recall comprehension and problem solving. J. Biol. Educ. S(2):101-112.

Commission on Undergraduate Education in the Biological Sciences, (1971) The use of module in college biology. G. Creager and D. L. Murray, eds. CUEBS, Washington, D.C.

Fincher C (1977) What research says about learning. NACTA J. 21(4):18-23.

Kemp J E (1968) Planning and producing audio visual materials. Chandler Publishing Co., Scranton, Pennsylvania.

Mager R E (1962) Preparing instructional objectives. Fearon Publishing, Belmont, California.

Matheny E L, Minnick D R, Webb J R, and Steele K L (1980) Methodology of developing an autotutorial program for teaching entomology. Bull Entom Soc Amer 26 (2): 115-116.

Minnick D R, Steele K L (1978) Autotutorial instruction in Entomology: principles of Entomology (orders). Bull Entom Soc Amer 24 (2): 161-163.

Minnick D R, Webb J (1977) Autotutorial instruction in Entomology: insect identification. Bull Entom Soc Amer 23 (3): 205-207.

CHAPTER 3. A New Philosophy

This chapter will discuss the student/teacher roles available through a philosophy of adult-to-adult teaching called **andragogy.** It will explain how A/I and self-instruction contribute to this philosophy.

The A/I method is one way to cope with the information explosion and specialization of a technological society. We can also use it to humanize teaching and create new teacher-student relationships.

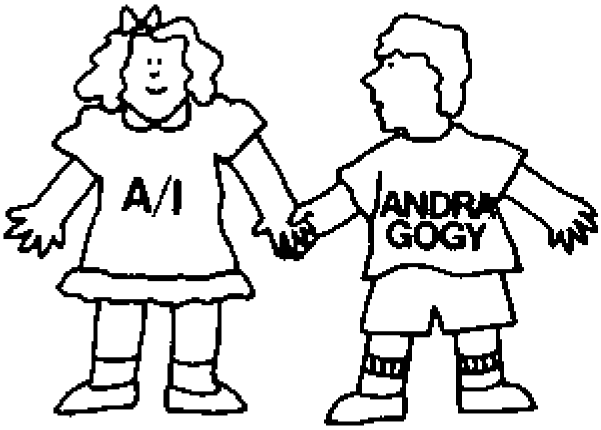

Objective

At the end of this chapter, you will be able to

- Discuss the teacher's new role relative to A/I and adult-to-adult teaching.

Andragogy: adult-to-adult teaching

Changing times

When one correlates life expectancy, culture, and technology change with time, the graph looks like this.

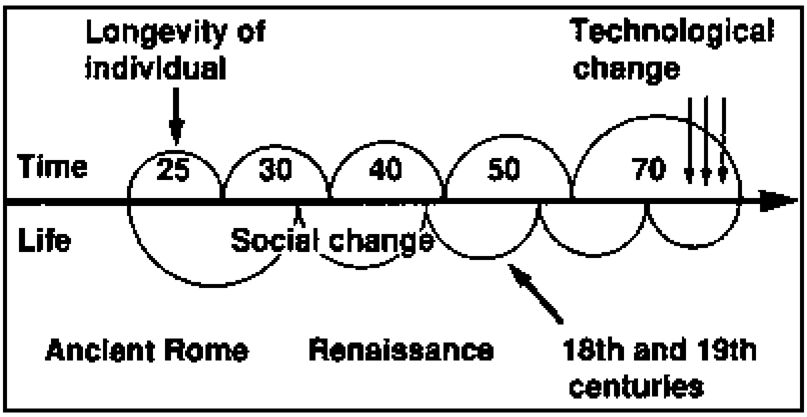

ADAPTED FROM: M. Knowles. 1972. The Modern Practice of Adult Education: Andragogy vs. Pedagogy. New York Assn. Press.

The graph shows that, at one time, people spent their whole lives experiencing little social or technical change. Today, however, we spend our whole lives in a social environment bombarded by technological change.

It also means that the educational tools we acquire in our professional lives may become obsolete soon after we leave school. It is therefore essential that educators find methods that allow **people to teach themselves.** And, more importantly, that educators **teach people how to teach themselves.** There are two basic steps in this process:

1. Create self-learning materials.
2. Re-allocate the responsibility of learning to the learner

- *from* dependent
- *to* independent.

Another word for education is **pedagogy** which means “to teach children.” It indicates an adult/ child relationship in the learning process, where the student depends on the teacher for most aspects of learning.

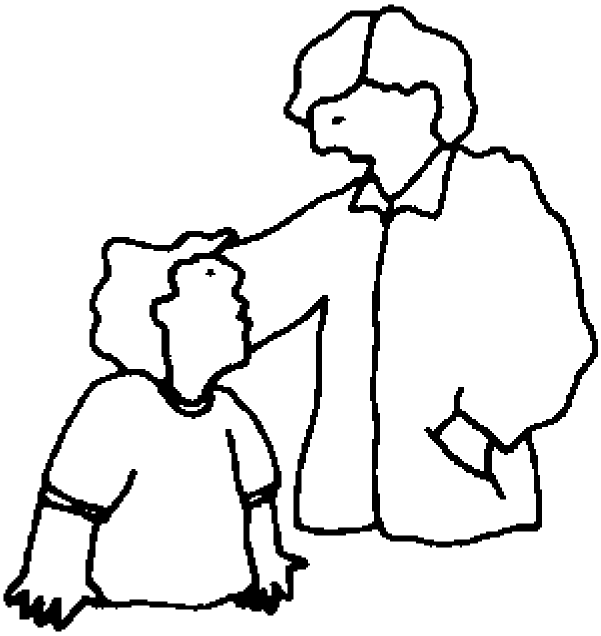

Educators are now forming a new word, **andragogy,** for a certain type of teaching. Andragogy literally means “to teach man.” It has come to mean **adult teaching.** Some of the elements in this new type of learning are

- self-instruction by the learner,
- adult-to-adult relationship between the teacher and the student,
- student selects learning materials,
- student explores learning materials,
- student auto- or self-evaluates rather than takes tests,
- student uses practical problem-solving exercises.

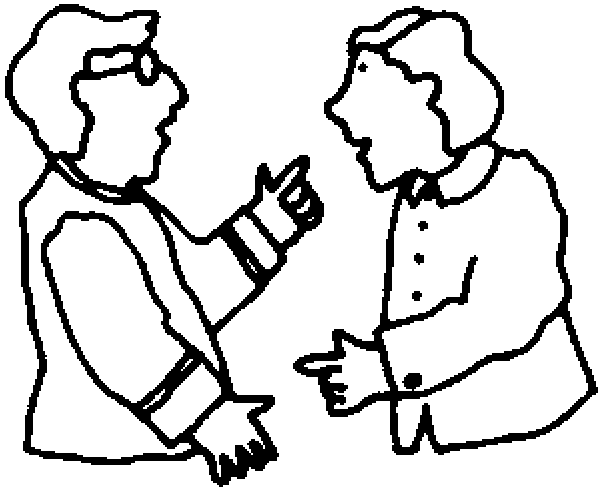

Due to academe postures, it is presently impossible to introduce many of these things at most higher educational institutions. Nevertheless, we can introduce some through A/I instruction. We talked about this change in the teacher/student role in the introductory chapters. Let's focus on it again.

The instructor becomes a

• facilitator,	• motivator,
• counselor,	• information specialist,
• humanist,	• attitude adjuster, and
• director,	• personal tutor.

This is an **important** concept in the evolution of information transfer because of the shift in

- responsibility and
- role.

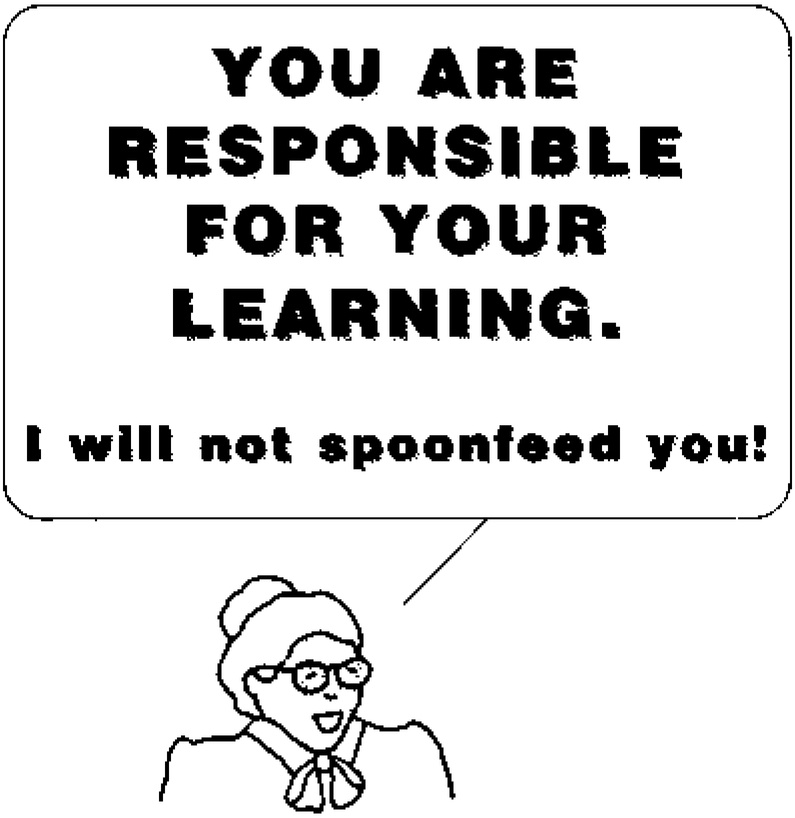

The A/I program may teach content (cognitive information), but what about the humanistic aspects of learning in the affective (emotions) domain?

Interline

The teacher's new role in A/I includes the responsibility of an interline agent. That is, the instructor fills in between the lines of information in the A/I program.

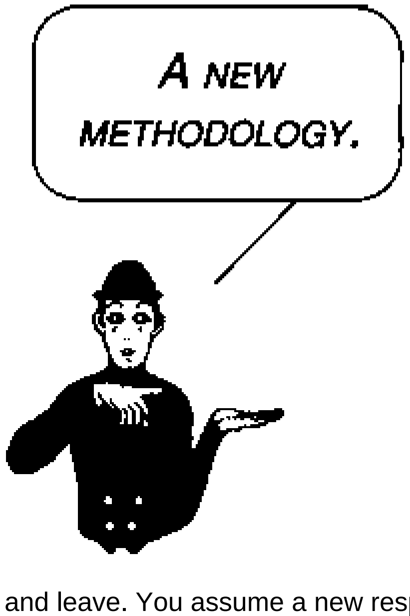

You don't create the program and leave. You assume a new responsibility that focuses on the emotional and problem-solving areas. You are a new type of instructor involved in human/group dynamics.

Interline example

You have a class of 30 people to lecture to on Monday, Wednesday, and Friday for 50 minutes. You

1. Create A/I for your course.

2. Divide the group of 30 into 3 groups of 10. Group 1 meets Monday, Group 2 meets Wednesday, Group 3 meets Friday.

3. Assign them a specific block of information modules 1-3.

4. Then they will attend class only 1 time a week but will have studied and be ready to use the information from modules 1-3 when they meet.

5. At the class, you have a group of 10 people, all of whom know common information.

6. You have 50 minutes.

7. Now it's up to you to create a problem-solving experience for them which uses and reinforces that information affectively.

8. Question, discuss, demonstrate, encourage, problem-solve, or tell stories to affect attitudes about the subject matter. Play that group like a fine-tuned instrument but make them **use** that information in some type of **active** process. Interline; fill in the lines of the content information with experiential exercises. It's a new and challenging role!

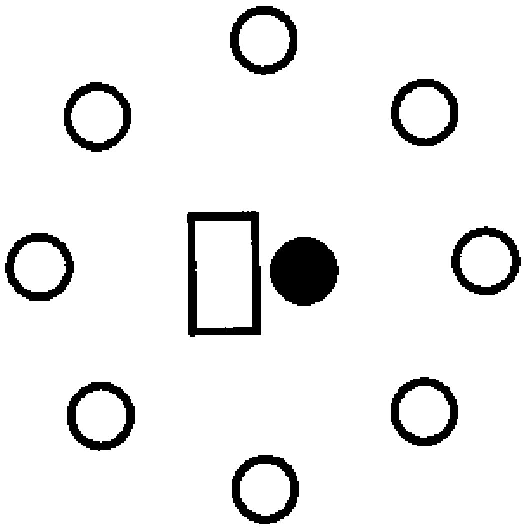

It demands that you assume a new creative role in two respects:

- You create the A/I courseware.

- You create new hands-and-heads activities that work and emphasize in a new domain-that of problem-solving. That's ultimately what learning is about-giving people information to solve personal and societal problems.

Feedback exercise

- Discuss the new role of A/I and andragogy in instruction and information transfer.

Answers to feedback exercise

A/I and andragogy -

• Create A/I programs to teach content.
• Shift responsibility for learning content to the student.
• Teacher becomes a

- facilitator,
- motivator,
- counselor,
- humanist,
- director,
- information specialist,
- attitude adjuster, and
- personal tutor.

• Focus instruction on problem-solving and learning attitudes about content information.

If you're not interested in learning theory or additional ways in which A/I works, go on to Chapter 6. Have fun! If you would like to delve into some of the latest concepts of educational theory and learning frontiers, read the next chapter.

References and information of interest

Knowles M (1972) The modern practice of adult education: Andragogy vs. pedagogy. New York Association Press, New York.

Knowles M (1978) The adult learner: a neglected species. Gulf Pub. Co., Houston, Texas.

Knowles M et al (1984) Andragogy in action. Jossey-Bass, London.

Lowe M C (1976) Value orientations. Carrol Press, Cranston, Rhode Island.

Marshak R (1983) What's between pedagogy and andragogy. Training Dev. J. 37(10):80-81.

Pierce C, Carol J (1986) On communication among "unequals". Int. J. Intercultural Relations 7:263-283.

White G, Coscarelli W (1986) The guided design guidebook: Patterns in implementation. West Virginia University, Morgantown, West Virginia.

CHAPTER 4. Memory and Whole Brain Learning

Space exploration, gene-splicing, communication information processing, and the functions of the human brain are some of today's most important frontiers.

You may need the information in this chapter to explain A/I to your colleagues or to convince some of them who are hesitant about A/I techniques.

Objectives

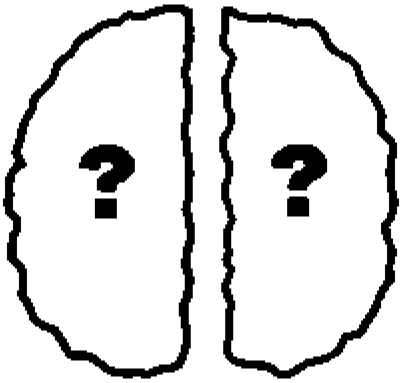

At the end of this chapter, you will be able to

- Evaluate the complexity of brain function and memory storage in learning.
- Compare the functions of the brain hemispheres in learning and behavior.
- Interpret the importance of the limbic system in learning and behavior.
- Discuss the quadrispheres' functions in whole brain learning.
- Relate the importance of the hippocampus and amygdala in retaining memory.
- Recall and describe the interrelationships of the 3 types of memory.
- List and discuss 3 additional concepts related to memory storage and recall:
    - chunking
    - subsumers
    - concept mapping

The human brain: center of learning and memory

Recently, there has been a flood of research associated with brain anatomy, organization, chemistry, memory, and learning.

There is still much that is mysterious about this 1.3-kilogram structure that makes us each unique human beings.

However, recent research has revealed more about how our brain functions as we learn.

To most people, the word "brain" involves an image of a single, wrinkled structure enclosed in a protective bony skull. Actually, the brain is not single but has two halves or hemispheres.

These hemispheres communicate with each other by several distinct bundles of nerve fibers.

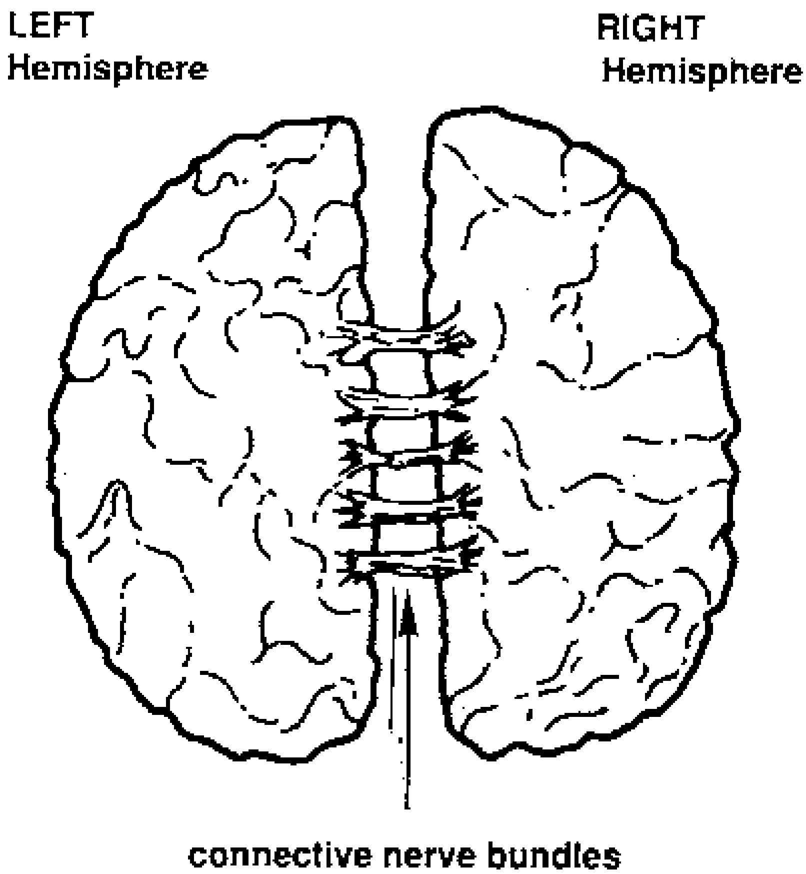

THE BRAIN HEMISPHERES

The left brain

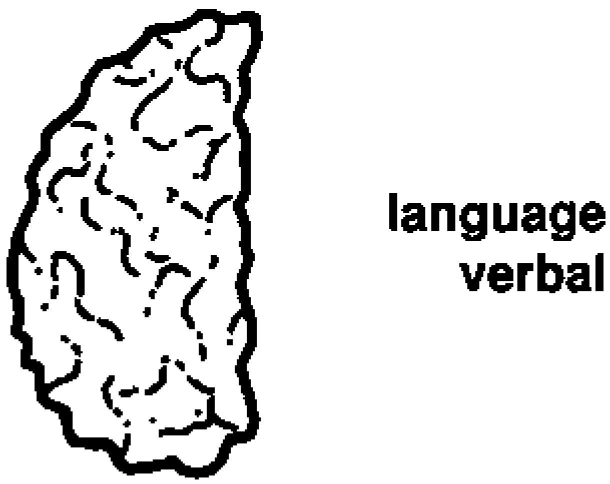

LEFT BRAIN

In the 1930s, Wilder Penfield and his colleagues at Montreal Neurological Institute in Canada used electrical stimulation to map areas of the brain that controlled speech and language. Subsequent research has shown that the left hemisphere controls words and language.

He also pioneered research on how the brain stores memories (more on this later), although some scientists disagree with his interpretations. Other researchers found that the left brain had enlarged areas and was dominant.

The split brain

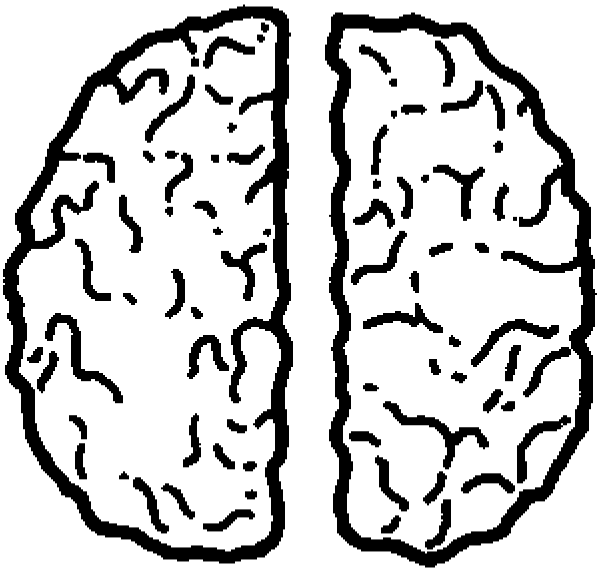

dependent
independent

SPLIT BRAIN

In the 1940s, a New York neurosurgeon, William van Wagenen, cut the fibers between the two brain hemispheres of patients, splitting them apart in an effort to cure uncontrollable epilepsy. In some cases, it cured the epilepsy and there was little change in the everyday activity of the patients.

Later research by Rodger Sperry, Eran Zaidel, and others shows that each hemisphere functions somewhat independently. However, they work together when using learning, memory, and survival skills.

The right brain

spatial
nonverbal

RIGHT BRAIN

Further investigations by this group and others discovered that while the left brain processes verbal language, the right brain deals with visual and nonverbal information. That is, each hemisphere is specialized. Some researchers now say that because our technological society concentrates on verbal skills and analytical thought processes, the right brain is relatively dormant. They say we should find ways to free its dormant power for learning and problem-solving.

The whole brain

As research progresses, it shows that brain function on any level is an intricate process without simple answers. However, scientists continue to study what they call whole brain teaching and learning.

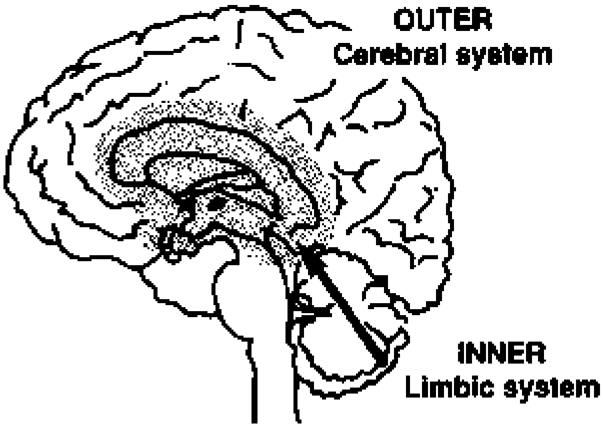

BRAIN, SIDE VIEW

In this concept, the brain not only has a left and a right hemisphere but an inner and outer brain as well. Each hemisphere has an upper outer cerebral area and an inner limbic system. In each of these 4 parts, division of labor exists among the specialized areas that process and deal with different types of information. Thus, a brain profile map of areas and functions would look like this:

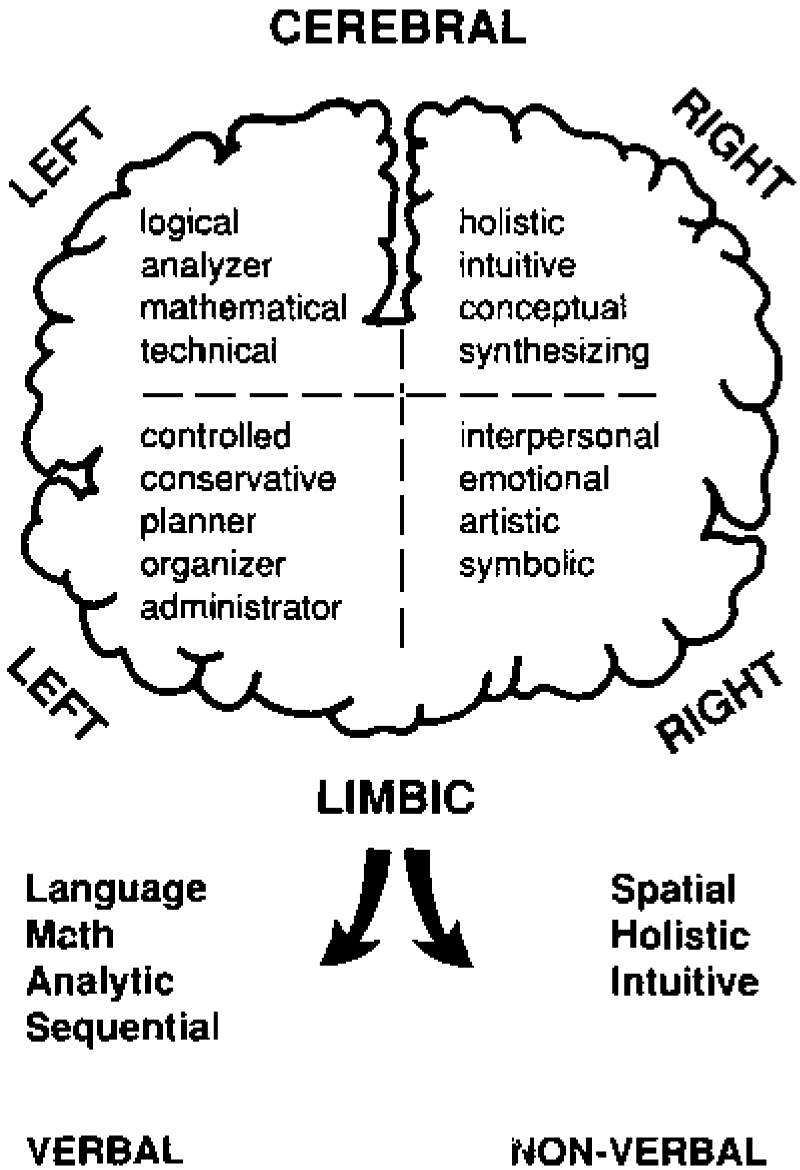

CEREBRAL

About now, you're probably asking what all this information has to do with creating A/I programs.

The brain and A/I programs

All this explains **why** slide-tape (A/I) programs are powerful tools in the learning process. The left brain processes the words on the tape and slides; the right brain interprets the pictures on the slides and associates the music and pictures on the tape, thus reinforcing learning by use of both.

Two other reasons why A/I works are memory and operant conditioning (as explained in Chapter 2).

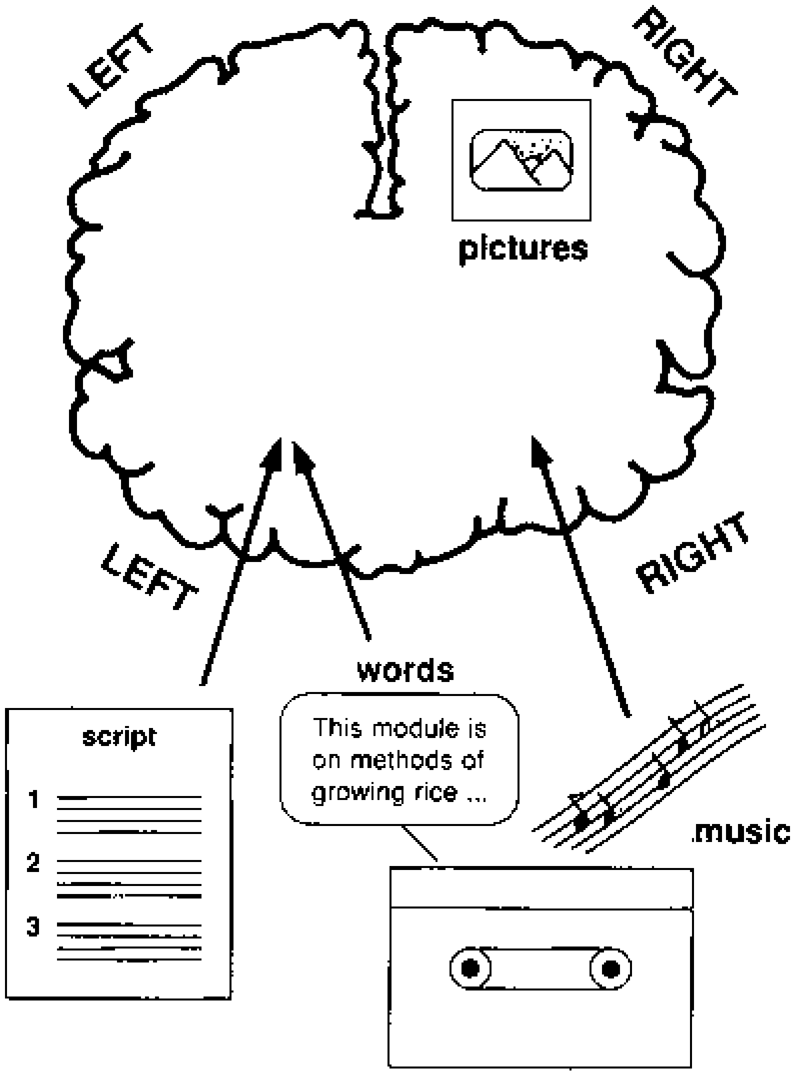

Memory

Today's research supports the hypothesis that memory actually makes physical changes in the brain. Some scientists contend that memory storage is linked to RNA encoding. Memory research continues in three important areas which help us understand learning.

Where it's stored

When Wilder Penfield, our neurosurgeon of brain mapping, applied electro-stimulation to the side or **temporal lobes** of the brain cortex, his subjects would not only remember past experiences but would "relive" them in a multisensual mode. They could smell, hear, see, or feel the things that surrounded them as if reliving the experience.

This and other research led us to discover where the memory storage centers are located in the brain, and that it is in an intricate sensory package.

Further research on memory has indicated that perhaps storage is related to pictures, and recall is dependent on a pictorial memory file (idetic recall).

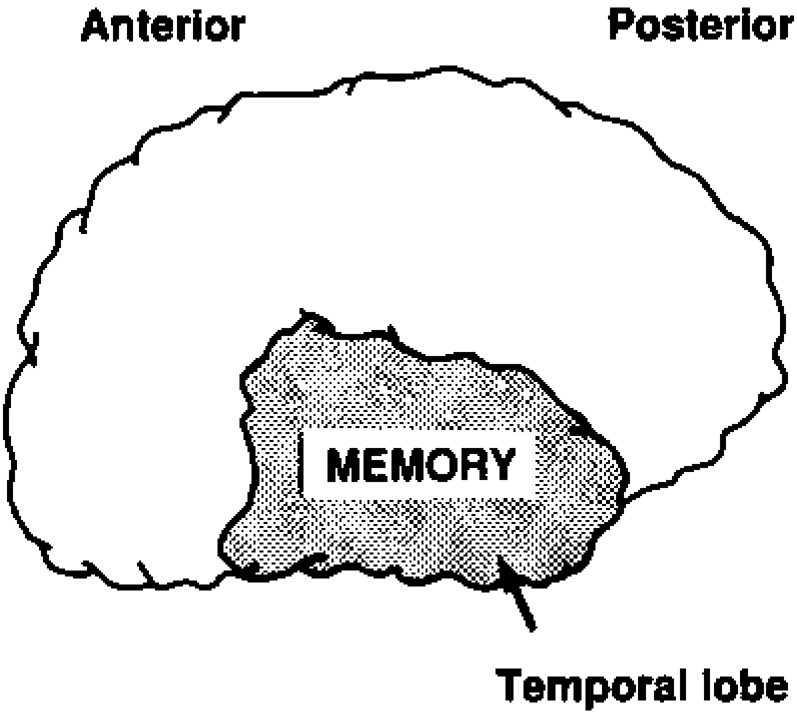

Memory gatekeepers

In 1953, neurosurgeons removed part of the limbic system (internal brain), including the **hippocampus,** from a young man, again in an attempt to cure epilepsy. This cured the disease, but he was then unable to remember or form a single lasting memory from the day of his operation.

Later research revealed that the hippocampus and another organ, the **amygdala** of the limbic system, are connected and both act as gatekeepers or central processing units for memory storage. Through some biochemical mechanism, memory passes from the sense organs through the limbic system and finally into the temporal cortex for permanent storage. The hippocampus acts as a screen for memory storage and the amygdala acts as the attitudinal screen.

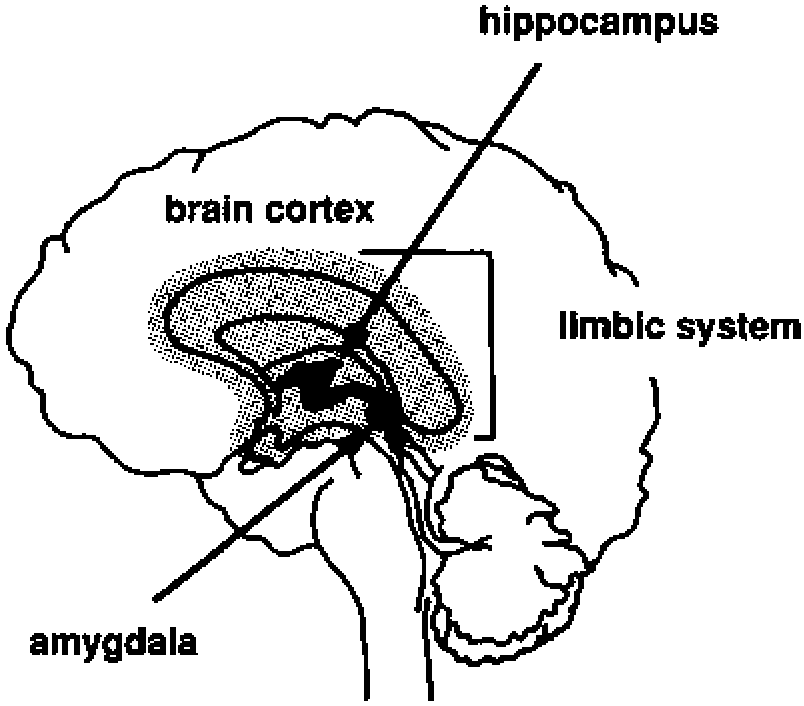

Memory: ***Summary I***

The hippocampus of the limbic system, in the inner brain, is the gateway to memory storage.

The amygdala of the limbic system indexes information with emotional and attitudinal codes such as joy, grief, fear, positive, and negative.

Attitudes are important to the learning process. Depending on the subject, 30% or more of lecture time treats the attitude or emotions about the subject material. In fact, the first 3 chapters of this guide do just that - help you form attitudes about A/I slide-tape modules.

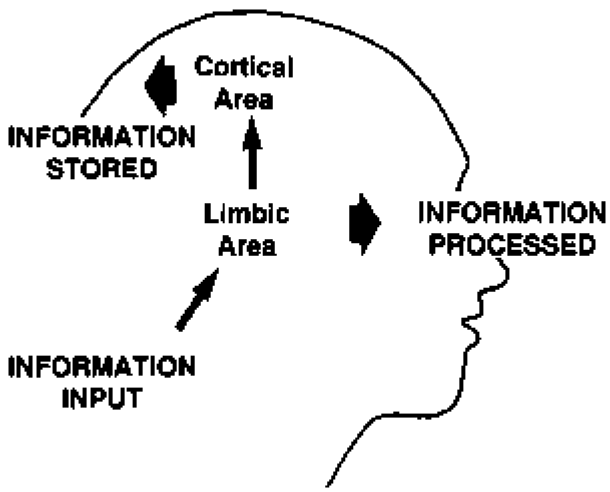

Information inputted from the 5 senses is processed in the limbic area and stored in the cortical area of the brain.

Types of memory

There are three types of memory that have been identified:

• ***Sensory memory****.* Of course, we could store no memory without input from the 5 senses. When stimulated, the senses evoke a response called **sensory memory** that usually lasts about 1 second before fading.

Briefly look at the words in the box below. Now close your eyes and watch the words and outline disappear. This is an example of sensory memory.

SENSORY MEMORY

• ***Short-term memory****.* The second type of memory is called short-term, or working memory. It lasts from 1 to 30 seconds. Short-term memory is limbic in origin.

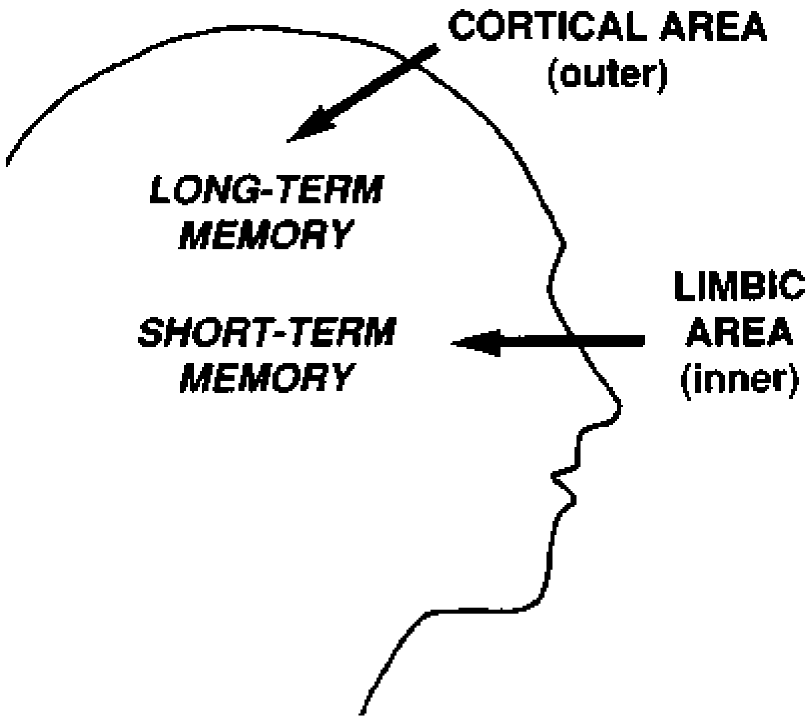

Short-term memory is stored in the limbic area in the inner brain.

• ***Long-term memory****.* And finally, there is long-term memory where we store knowledge from minutes to a lifetime. Long-term memory is stored in the temporal lobes of the cortex.

Storage sequence

Another recent finding, important to the learning process, shows that we store knowledge in a certain sequence. Knowledge first goes through the senses into the short-term memory. Then, it passes through short-term memory, and the limbic system (hippocampus) sifts it before the temporal lobe stores it as long-term memory.

Thus, the hippocampus and its associated short-term memory are gatekeepers to long-term memory storage.

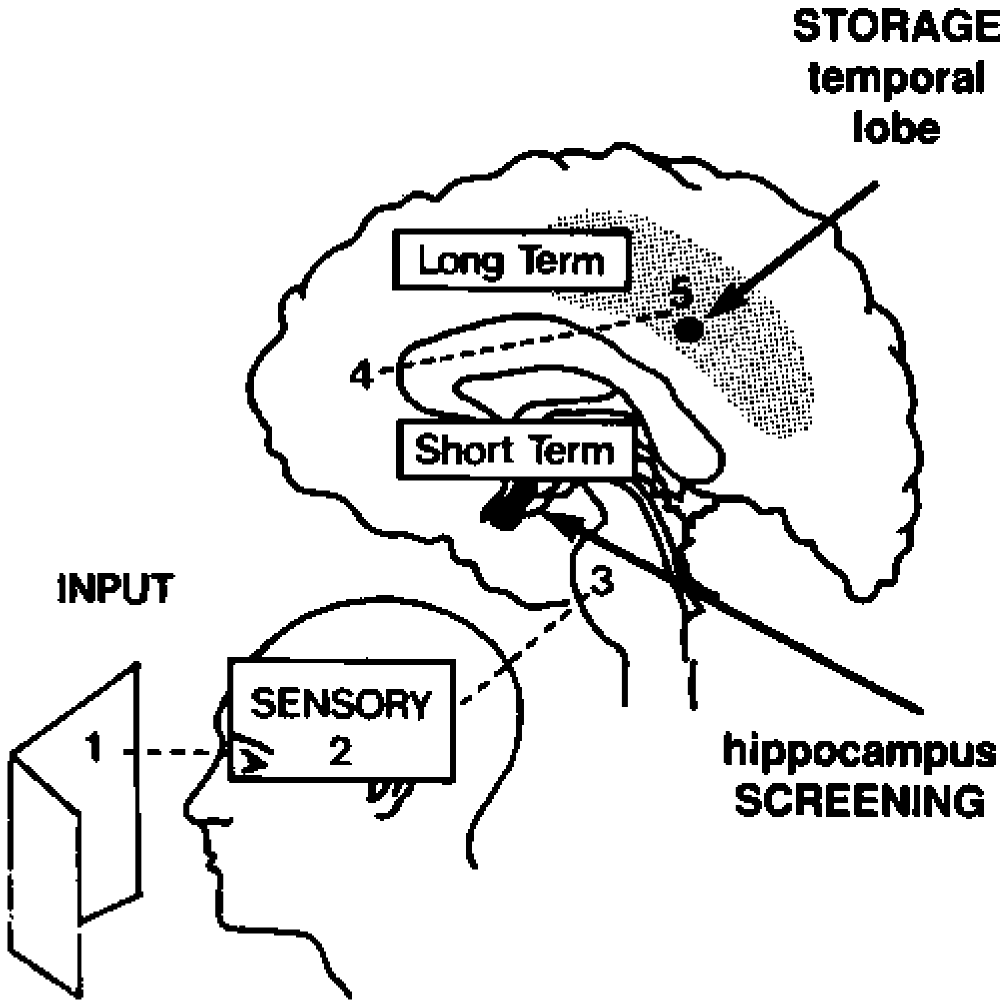

YOUR A/I PROGRAM

Memory: ***Summary II***

Memory Sequence	
	Duration
Long-term memory	**minute to life**
Hippocampus **Short-term memory**	**gate** **1-30 sec**
Sensory memory	**1 sec**

Chunking, subsumers, and concept maps

Associated with memory storage are three additional discoveries that help us understand how memory and recall work.

Chunking

One discovery is that during processing, information must be broken down into **chunks** or memory units. Of course, the units depend on our past learning and cultural experience.

7 ± 2

Chunks are the capability of an individual to process information in the short-term memory at any one time. The 7 ± 2 rule states that the range of information bits that can be held in short-term memory at any one time is 5-9, or 7 ± 2. Therefore, most people can only process 5-9 chunks of information in their short-term memory at a time. Due to their different exposures, individuals vary in chunk size and speed by which they can deal with information, and therefore in their ability to process such information.

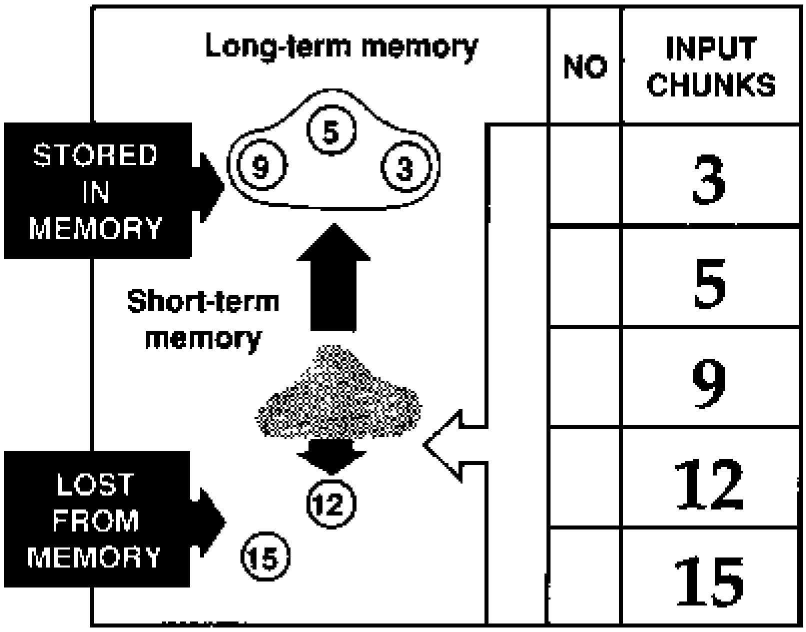

Let's say we want to help a learner store long-term information for problem-solving. Long-term storage must go through short-term storage, and short-term storage can only cope with 5-9 chunks of information. Thus, we must give the learner only 5-9 chunks of information at a time. Application of the *7 ±2* rule in information exposure would help learners input information for long-term storage. The principle is to use small organized steps to aid learning.

Subsumers

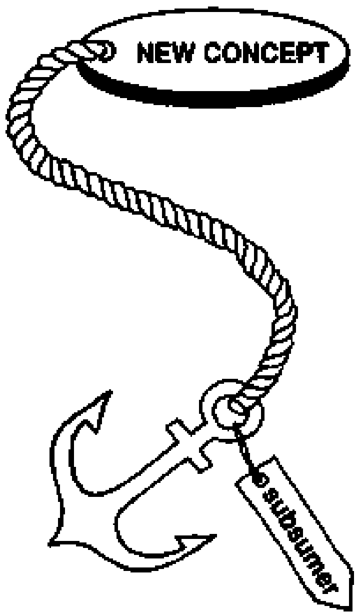

Research shows that we can learn and store new concepts more efficiently if we can link them with some already stored **previous concept** or **subsumer.** Our role as teacher and creator of instructional materials is to find common subsumers stored in students' minds and use them to lead students into new concepts.

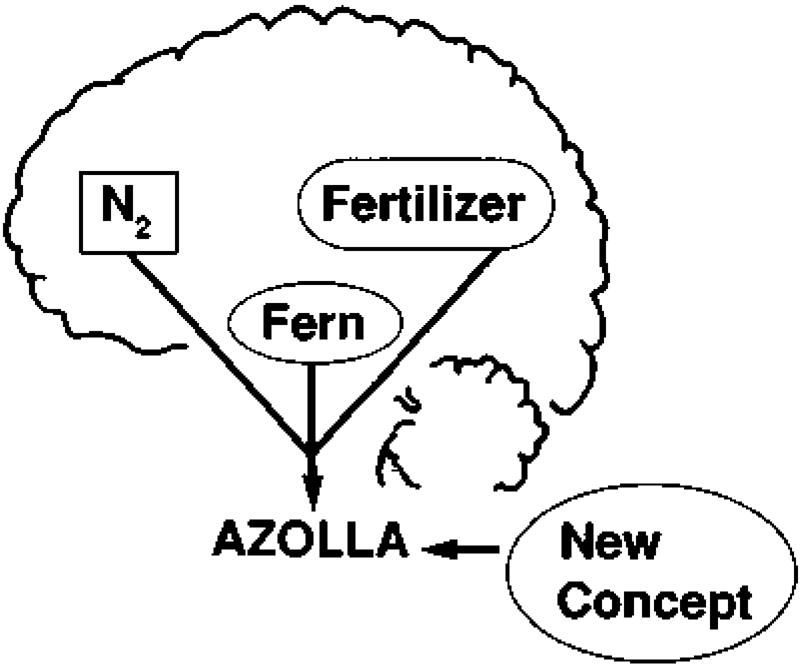

Step 1. Find common existing concept (subsumer).

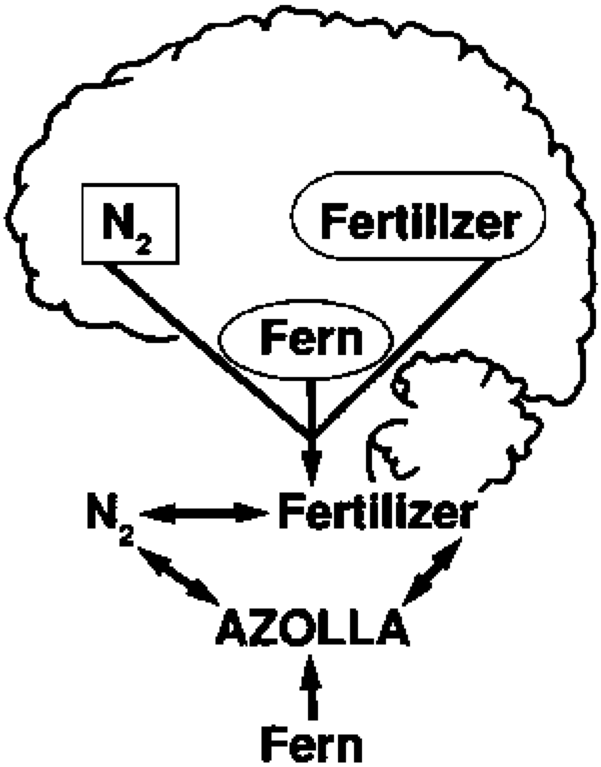

Step 2. Associate new concept with subsumer.

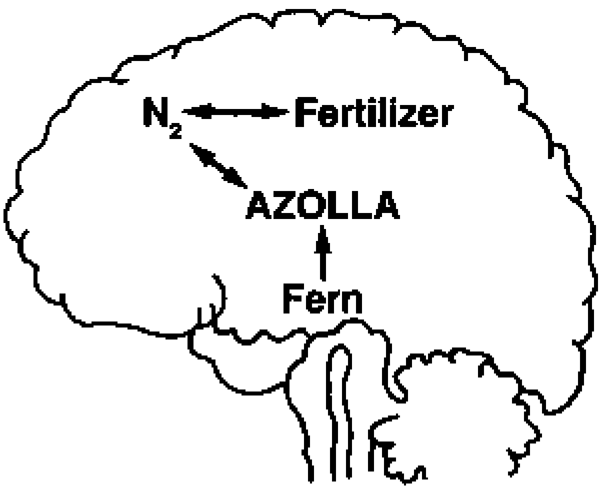

Step 3. Design a learning task to help link new concepts to existing subsumers.

The first step, getting the teacher and the learner to agree on the existing concept, is often difficult. It depends on the learner's prior exposure to the concept. Feedback is essential here to determine these levels of exposure to create relevant learning experiences that relate to stored subsumer menus or maps.

The dialogue or interview is useful in determining subsumers because it is faster than written exams and has more feedback opportunities.

Communication through the written/reading channel is more difficult but is easier if you use verbal words and nonverbal pictures. Left brain = words. Right brain = picture.

Concept maps

Learning research has given us another helpful instrument to assess the level and associations of a learner's concepts. It is called a **concept map.**

Concept maps and their subsumers can help determine the appropriate information level for creating learning materials. They are also valuable to create and measure instruction.

We asked a farmer to draw his concept map of the word "rice." Notice the associations or subsumers.

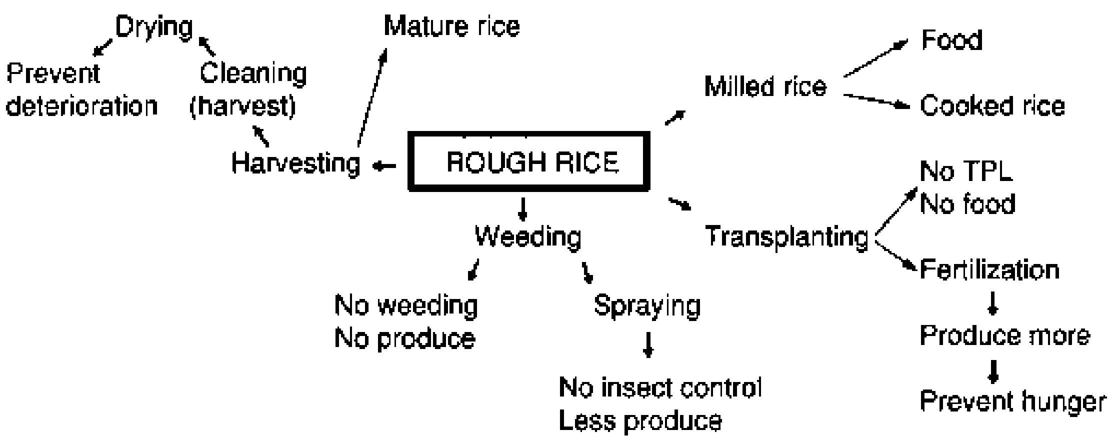

RICE: A CONCEPT MAP

Memory: ***Summary III***

AIDS TO LEARNING		
Chunk	**=**	**meaningful unit**
		7 + 2
		short-term memory
Subsumer	**=**	**association anchor**
Concept map	**=**	**method of assessing subsumers**

Feedback exercise

• Usually, the left brain performs _____________ functions while the right brain is _____________ oriented.

• Match the terms with the brain hemisphere function.

Function	Hemisphere
_____ intuitive	A. left
_____ sequential	B. right
_____ mathematical	
_____ holistic	
_____ analytical	

• Match these terms with the limbic hemisphere function.

_____ emotion	L. left
_____ organization	R. right
_____ conservative	
_____ artistic	
_____ interpersonal	

• In which brain lobe is memory actually stored?

____

• List and describe the importance of the two brain organs of the limbic system.

HINT: One starts with an A and looks like an almond. In fact, the word means almond-like. The other's prefix is similar to an animal.

1. ___________________ , _______________
____
2. ___________________ , _______________
____

• List in sequence and relate the time duration of three types of memory.

Memory sequence Type Time
1. ___________________________________
2. ___________________________________
3. ___________________________________

• Look at the last objective on page 57 of this chapter. What two memory devices are included in this chapter?

______________ , _____________

• List and discuss an additional device to assist in preparing learning resources.

____

Answers to feedback exercise

• Speech - verbal, visual

• A, A, A, B, A

• R, L, L, R, R

• Temporal

• amygdala - emotion, attitudes hippocampus - memory screen

• Sensory, 1 second
short-term, 1 second to 1 minute
long-term, 1 minute to lifetime

• Chunking, subsumers

• Concept map - map of subsumer relationships stored in memory.

References and information of interest

Begley S (1983) How the brain works. Newsweek February: 34-41.

DeBono E (1970) Lateral thinking. Penguin Books, New York.

Hermann N (1981) The creative brain. Training Dev. J. 35(10):11-16.

Ironson D (1984) Your brain: using both halves for enhanced communication. Int. TV. July, 18-21.

Janes J (1976) Origin of consciousness in the breakdown of the bicameral mind. Houghton Mifflin Co., Boston.

Keeton W, McFadden C H (1983) Elements of biological science. W. W. Norton and Co., New York.

Muller G A (1956) The magical number 7 plus or minus two; some limits on our capacity for processing information. Psychol. Rev. 63:181.

National Society for Study of Education (1976) The psychology of teaching methods. University of Chicago Press, Chicago, Illinois.

Novak J D (1977) A theory of education. Cornell University Press, Ithaca, New York.

Novak J D (1980) Learning theory applied to the biology classroom. Am. Biol. Teacher 42(5):280-295.

Novak J D, Gowin D B (1988) Learning how to learn. Cambridge University Press, Cambridge, England.

Olson D R (1972) On a theory of instruction: why different forms of instruction result in similar knowledge. Interchange 3(l):9-24.

Randhawa B S, Colffman W E (1978) Visual learning, thinking, and communication. Academic Press, New York.

Sagan C (1977) Dragons of Eden. Random House, New York.

Scientific American (1979) The brain. W. H. Freeman and Co., San Francisco.

Simon H A (1974) How big is a chunk? Science 183:482.

Springer S P, Deutsch G (1981) Left brain, right brain. W. H. Freeman and Co., San Franscisco.

Stevik E W (1976) Memory meaning and method. Newbury House Publishing, Inc. Stewart, Rowley, Massachusetts.

Van Kirk J T, Rowell R (1979) Concept maps: a tool for use in biology teaching. Am. Biol. Teacher 41(3):171.

CHAPTER 5. Learning Styles

Objective

After reading this chapter, you will be able to

• Explain the different ways by which people learn and classify the different types of learners and learning strategies.

How people learn

People learn differently.

In an approach to a new learning strategy such as self-learning, we would be remiss if we did not relate it to learning/teaching styles.

Researchers from varied disciplines have identified four basic personalities in relation to learning. One researcher, Dr. David Kolb, found that some people learn by **doing,** others by **sensing and feeling,** some by **watching,** and some by **thinking.** Now, of course, a person does not rely on one of these ways all the time but shows a preference for one over the others.

Kolb found two basic variables in the learning preferences of people:

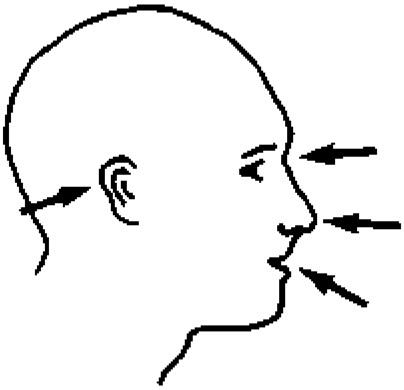

perception

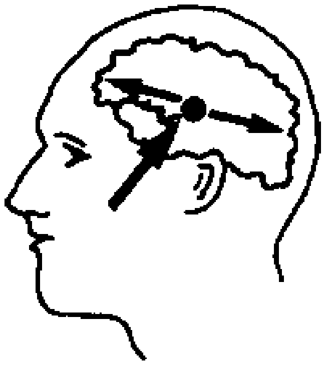

process

That is, people **perceive** in a continuum between concrete and abstract points.

concrete	
↕	**perception** **perception** **perception** **perception** **perception**
abstract	

Those at the concrete end of the spectrum **sense** and **feel** their way. They are called sensers/feelers.

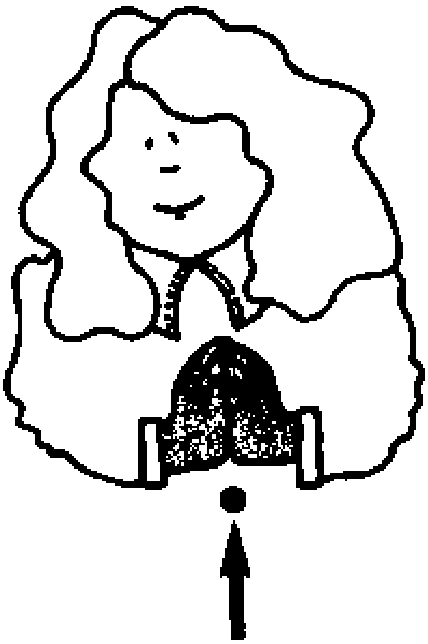

concrete = sensers/feelers

Others at the abstract end would rather think than feel.

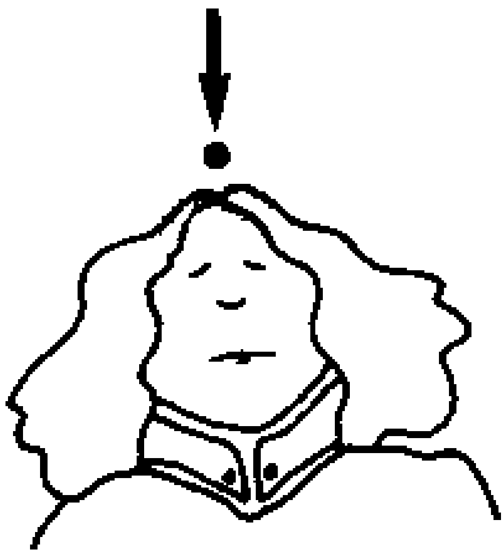

abstract = thinkers

Hence, the continuum-concrete = sensers / feelers

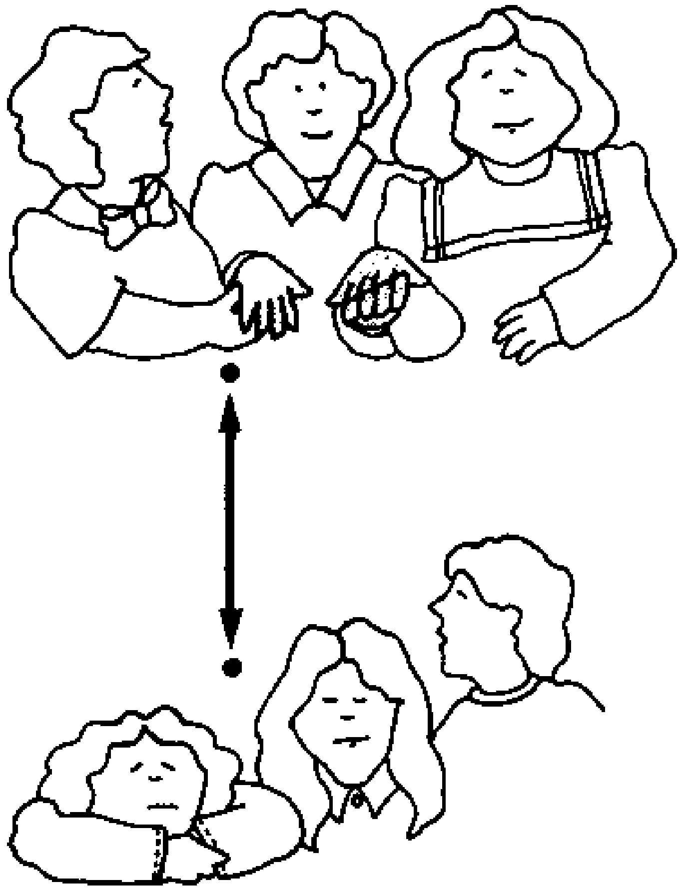

abstract = thinkers

As for **processing** information there is, again, a continuum between those who like to **act** or **do**,

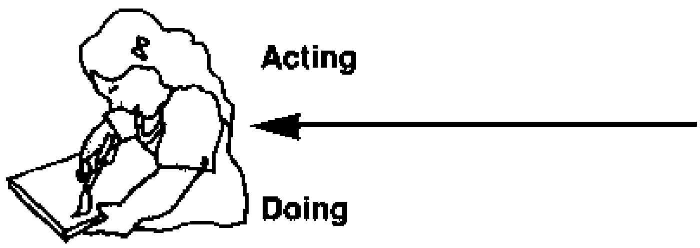

and those who would rather watch.

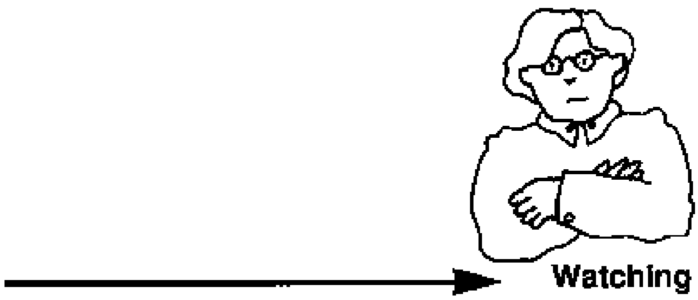

By coordinating these preferable perception and processing variables, educational researchers have identified 4 learning styles:

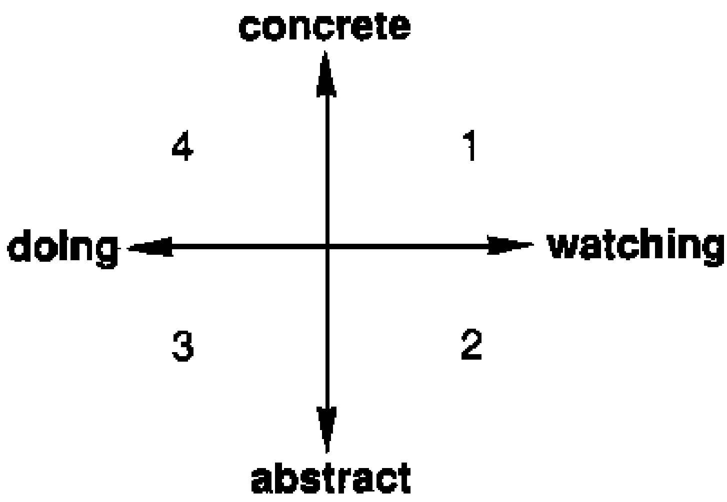

Learner personality types

Another learning style researcher, Dr. Bernice McCarthy, has labeled the 4 types of learners. Type 1 learners are *innovative learners.*

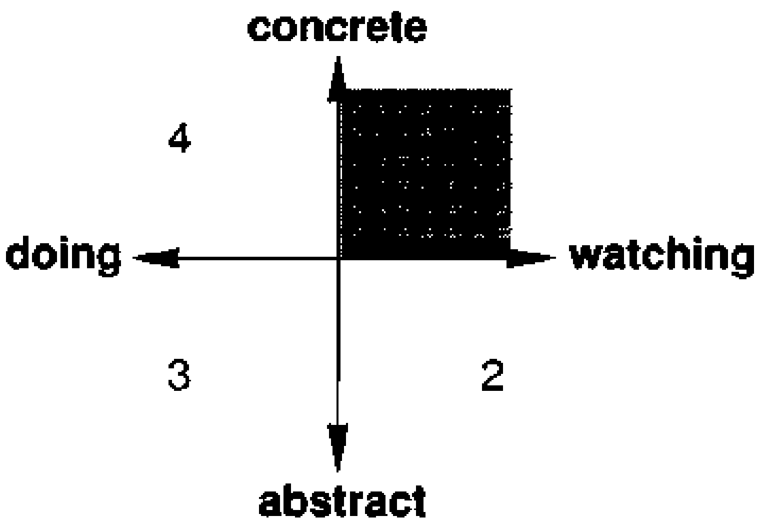

Type 1 Innovative Learners

Some brief descriptors of Type 1 learners are:

- Perceive concretely, process reflectively
- Social interactor
- Feeling
- Innovative
- Learn by listening
- Divergent thinkers

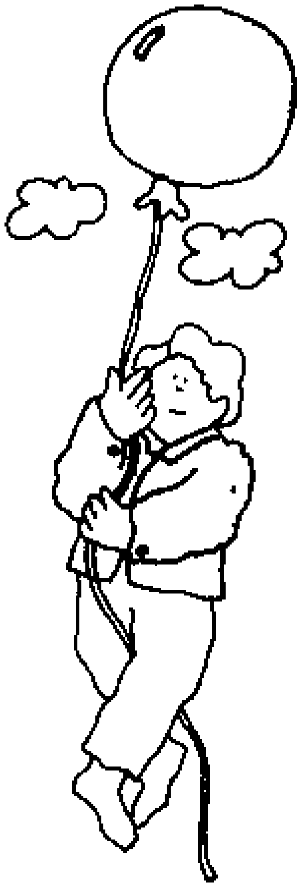

By comparison, Type 2 learners are called *analytic learners.*

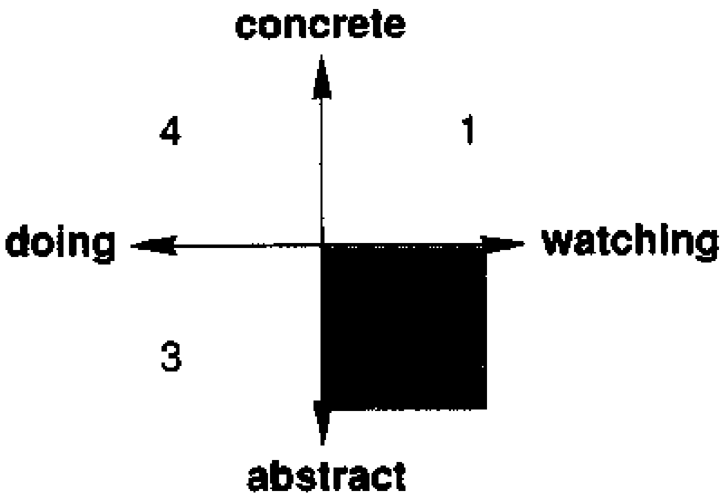

Type 2 Analytic Learners

The descriptors of Type 2 learners are:

- Perceive abstractly, process reflectively
- Consider what the expert thinks
- Idea-oriented
- Data collectors
- Seek sequential information
- Intellectuals

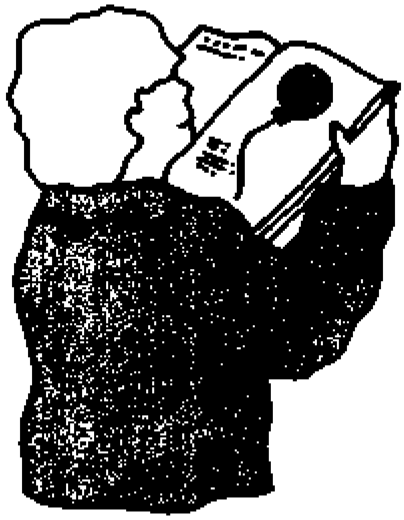

Those who prefer the third type of learning style are called *common sense learners.*

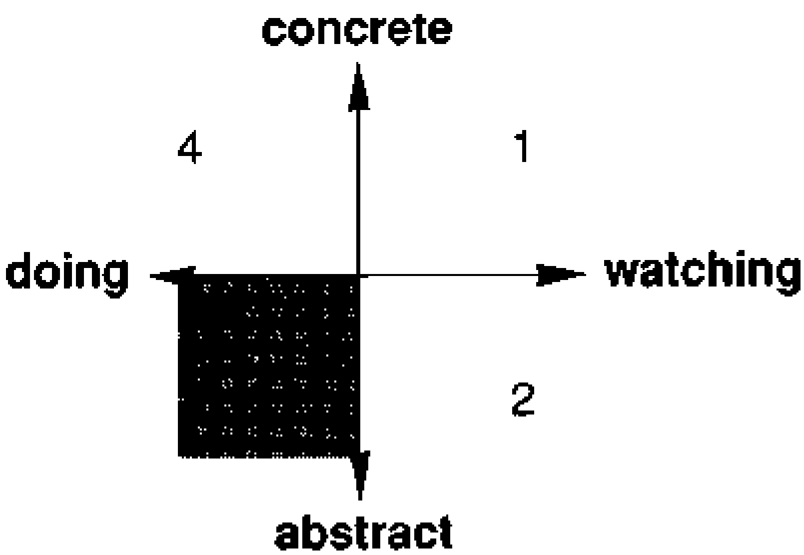

Type 3 Common Sense Learners

They can be described as:

- Perceiving abstractly, processing actively
- Practical
- Hands on
- Reality-oriented
- Problem solvers
- Interested in application/making things work

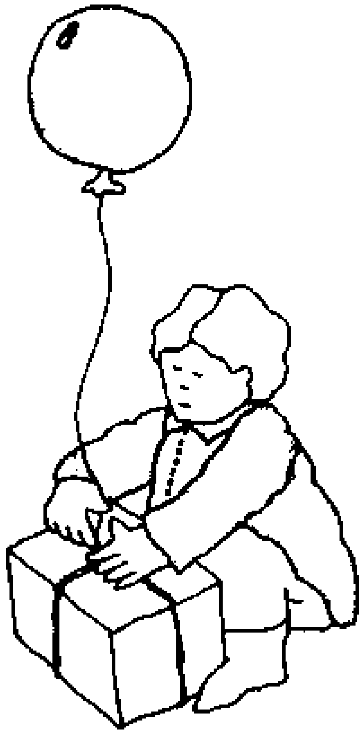

Type 4 learners are called *dynamic learners.*

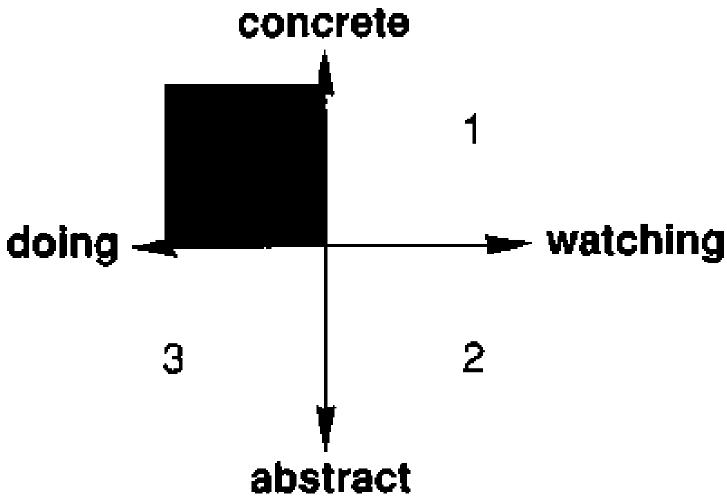

Type 4 Dynamic Learners

They are characterized as:

- Perceiving concretely, processing actively
- Intuitive
- Unstructured
- Experimental
- Changeable
- Risk takers

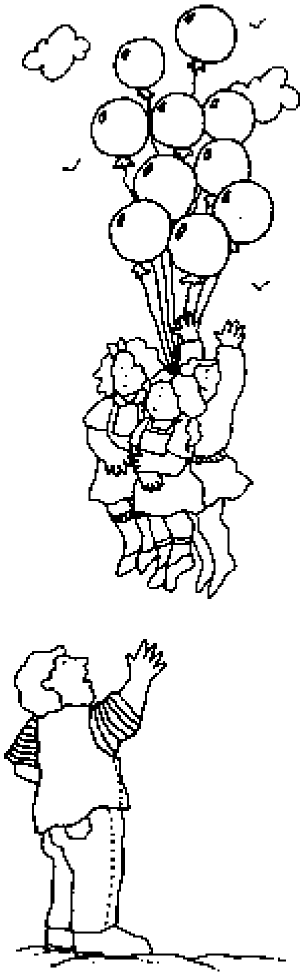

So in summary, there are 4 learning styles and each is related to a variable personality type in a training population.

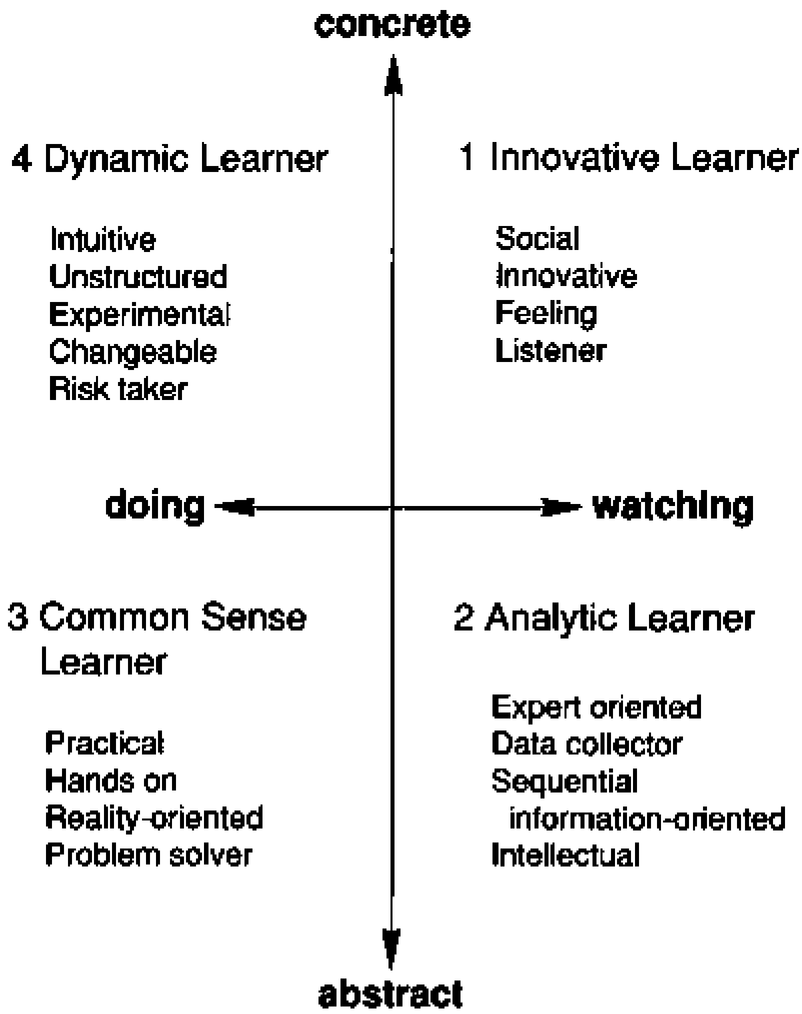

If these 4 learning styles emerge from inborn natural tendencies associated with the senses, what are the teaching styles that serve to communicate with these learning styles?

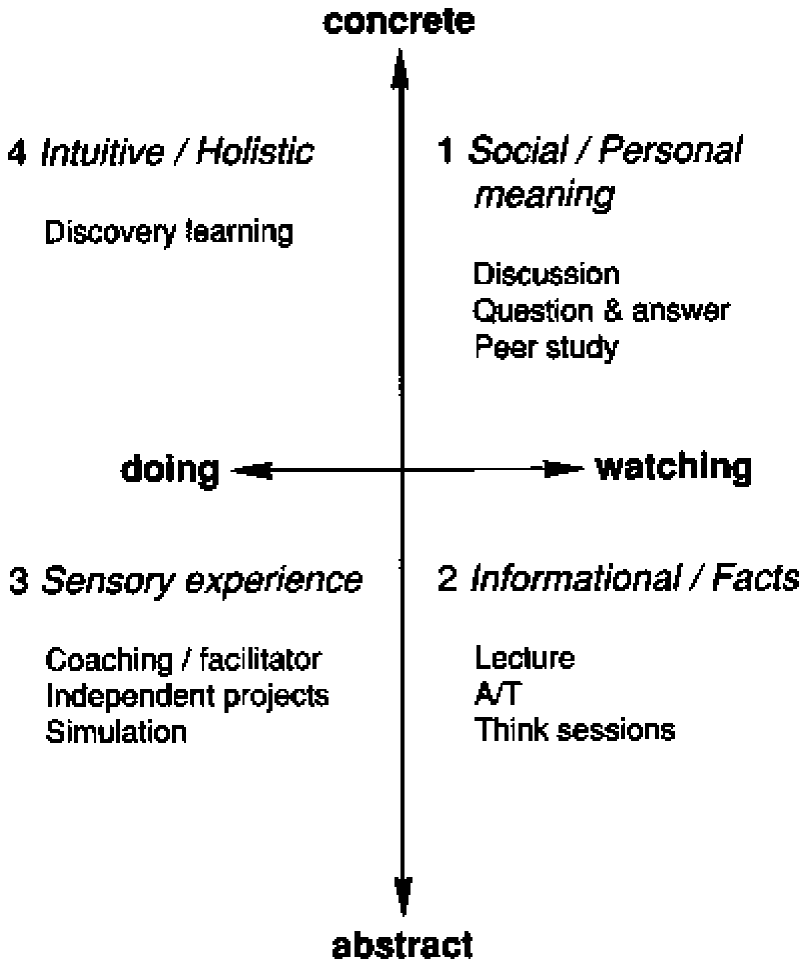

Again McCarthy's research has shown that most training is directed at a **Type 2** learning style which addresses information, facts and concepts, but that only 28-30% of the population learn best in Style 2. So 70% of the learners could learn more efficiently if taught with teaching styles other than No. 2.

Yet, facts and concepts - cognitive information - are extremely important to communicate in the scientific disciplines.

- **INFORMATION**
- **FACTS**
- **CONCEPTS**

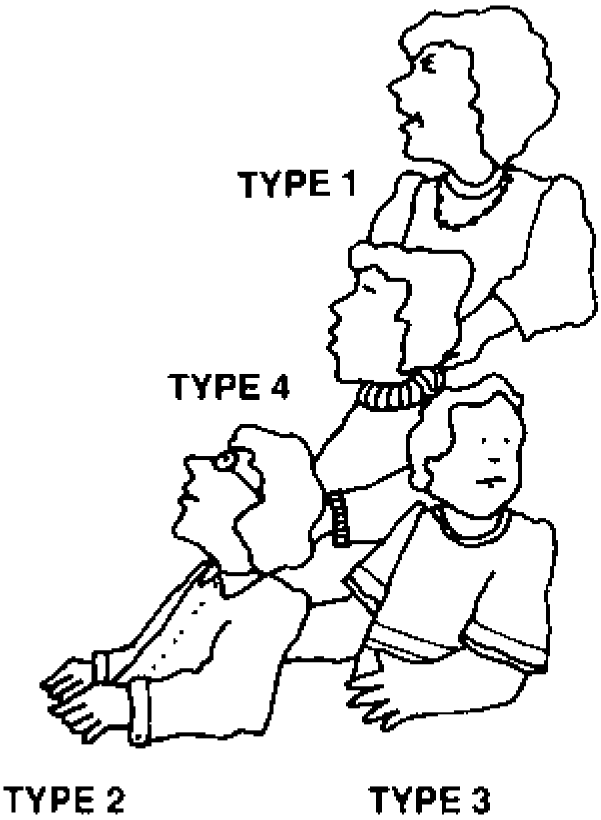

If traditional training is focused on Teaching Style 2 of which the **lecture** predominates, if traditional training is passive, what about

Projects
Problem solving
Creativity
Other learning styles

Often in traditional instruction, there is not enough time to *do,* to *apply* these important aspects of learning.

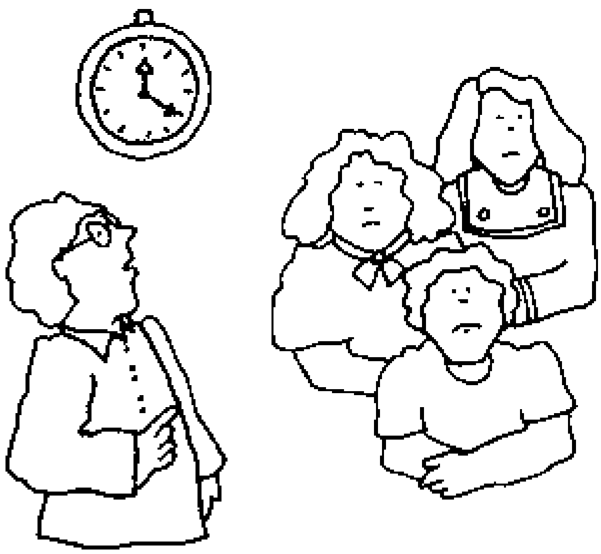

A strategy for Learning Style 2

Thus, one strategy is to create self-learning materials for Learning Style 2 (and eventually for all learning styles). By relegating cognitive information to a self-learning strategy, the educator is *free* from being a standup purveyor of facts, *free* to explore and create, *free* to develop learning strategies in the other learning styles - experiences that focus on problem solving. For, again, what use is knowledge if it can't be used to solve problems for the betterment of mankind?

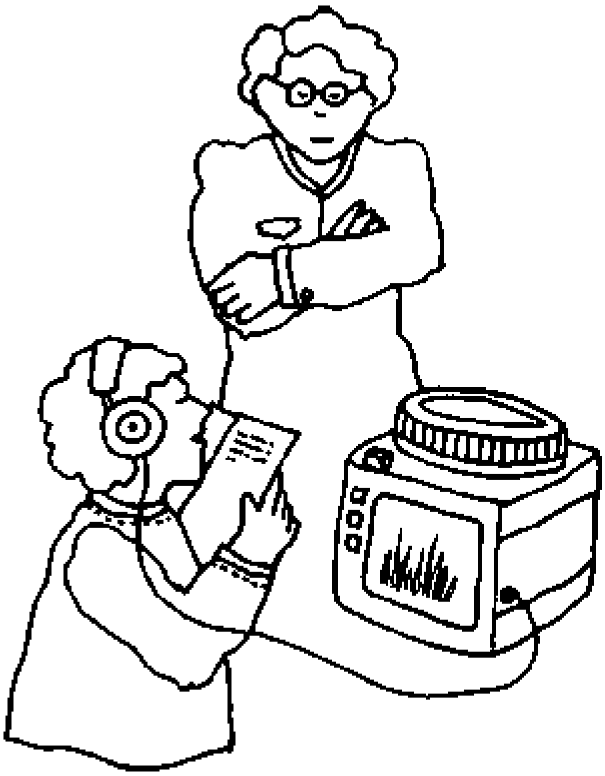

References and information of interest

American College Testing Program (1977) Promoting student learning in college by adapting to individual differences in educational cognitive style: Final evaluation report. Princeton, New Jersey.

Button C B (1977) Teaching for individual and cultural differences: a necessary interaction. 435-438 *in* Educational Leadership. Vol. No. 34.

Dunn R, Dunn K (1974) Learning style as a criterion for placement in alternative programs. Practical applications of research. Phi Delta Kappan 56(4):275-278.

Dunn T, Dunn K (1978) Teaching students through their individual learning styles: a practical approach. Reston Publishing Co., Inc., Reston, Virginia.

Fischer B B, Fischer L (1979) Styles in teaching and learning. Educational Leadership 36(1): 245-254.

Gagne R M, ed. (1967) Learning and individual differences. Charles E. Merrill, Columbus, Ohio.

Gregorc A F (1979) Learning/teaching styles. Student learning styles: diagnosing and prescribing programs. National Association of Secondary School Principals, Reston, Virginia.

Hunt D E (1979) Learning styles and student needs: an introduction to conceptual level. Student learning styles: diagnosing and prescribing programs. National Association of Secondary School Principals, Reston, Virginia.

Jung C G (1976) Psychology types. Princeton University Press, New Jersey.

Kolb D A (1979) Organizational psychology: an experiential approach. 3d ed. Prentice-Hall, Englewood Cliffs, New Jersey.

Lawrence G D (1982) People types and tiger stripes. 2d ed. Center for Applications of Psychological Type. Gainesville, Florida.

McCarthy B (1979) Learning styles: identification and matching teaching formats. Unpublished doctoral dissertation, Northwestern University, Illinois.

McCarthy B F (1981) The 4 MAT system: teaching to learning styles with right/left mode techniques. Mark Anderson and Associates, Arlington Heights, Illinois.

Merril D W, Reid R H (1976) Style awareness text. Personnel Predictions and Research, Inc. The Tracom Corp., Denver, Colorado.

Myers I B, McCaulle M H (1985) A guide to the development and use of the Myers-Briggs type indicator: manual. Consulting Psychologists Press, Palo Alto, California.

Renzulli J, Smith L H (1978) Learning styles inventory: a measure of student preference for instructional techniques. Creative Learning Press, Inc., Mansfield Center, Connecticut.

Torrance E Your style of learning and thinking, Form C. Interpretation report. Department of Educational Psychology, University of Georgia, Athens, Georgia.

PART II - A/I OR SELF-LEARNING MATERIALS: CREATION AND USE

CHAPTER 6. Performance/Instructional/Objectives

The learning domains

Remember, a principle of learning is that repetition aids retention. That's one reason for the objective and feedback exercises in A/I. Now that you have the A/I definition in mind, let's explore the areas of learning.

If you skipped the first two chapters, please go back in Chapter 2 and *review* the 8 parts of a module. While you're in this chapter, it's even more important to *learn* our working definition of A/I including the 8 concepts.

Repetition aids retention
Repetition aids retention
Repetition aids retention
Repetition aids retention
Repetition aids retention
Repetition aids retention
Repetition aids retention
Repetition aids retention
Repetition aids retention
Repetition aids retention

For our purposes, we can classify all learning materials into three areas called **learning domains.**

1. Cognitive means knowledge or mental ability.

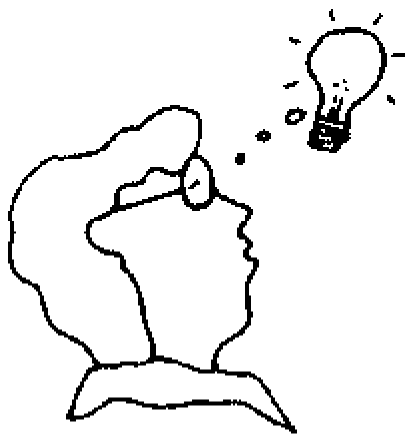

2. **Affective** means attitudes or emotional commitment.

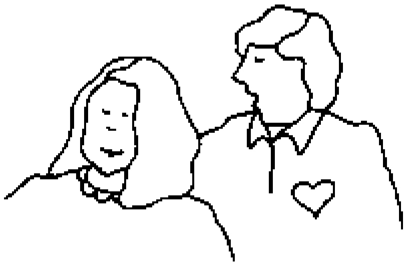

3. **Psychomotor** means skills or physical ability.

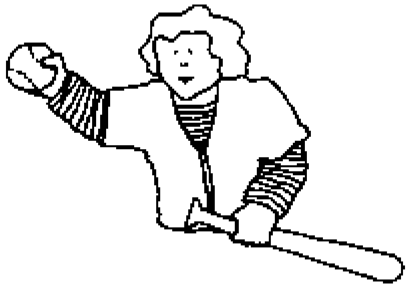

Exercise 1

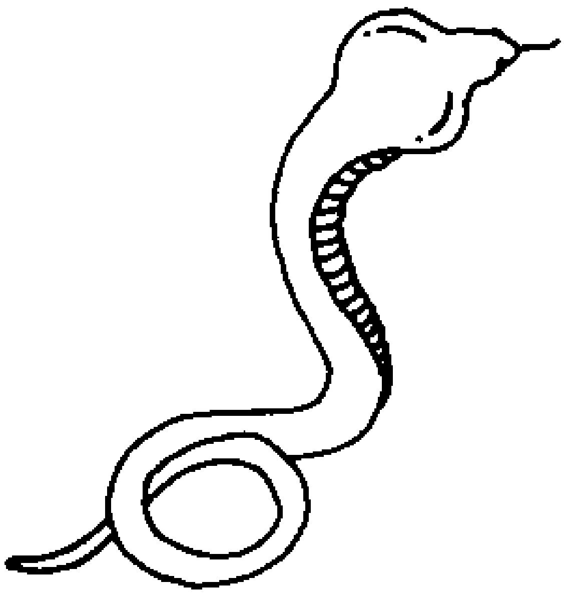

Here are some examples of information. Can you classify them into their respective domains?

A. In the yoga position, the serpent rests in the human body at the base of the spine. Positioned with its head up, it slithers up the spine and passes the third eye in the forehead and comes to rest in the person's head.

B. When killing a poisonous snake, be sure to stay at least the distance of the snake's body length away. With a strong implement, strike it on the back of the head.

C. Cobras are especially bad snakes.

The first example, A, is **cognitive,** providing information about the thought processes associated with yoga. It also describes the location of the third eye which eastern cultures associate with intelligence.

The second, B, explains skills involved in killing a snake and is, therefore, **psychomotor.**

And the third, C, relates an attitude **(affective)** information about cobras. Someone who makes a livelihood with performing cobras might have a different attitude!

We purposely used the emotion-laden subjects of religion and snakes as well as the word "slithers" to challenge your ability. Did you do well on the exercise? We'll return to learning domains a little later in this chapter.

First, we must write performance objectives. Even Skinner's rats and pigeons had a goal. We call these goals **performance objectives.**

Performance objectives

Performance objectives are tools to explain the material you want to teach. They simply tell what the instructor wants the student to learn.

Preamble

There are 4 major parts of an objective. We call the first part the preamble. These are the words at the beginning of the objective that set the stage for the action to follow. For example, "At the end of this module, you will be able to..." is a preamble to the expectations you have of your students.

> *Note:* Each learning domain has its own verbs. This manual contains information on writing objectives in the cognitive domain because it is the major domain in which the self-learning process is successful.

Verb

The second part of an objective is the verb. The verb tells students precisely what you want them to do. Let's use the preamble from our first example and then add a verb. At the end of this module, you will be able to "write..."

Open vs closed verbs*.* When selecting verbs to use in writing objectives, remember that there are two kinds: **open** and **closed.**

Open verbs are open to different interpretations by different people. Because they are confusing, do not use them. For example, "to appreciate the plight of the subsistence farmer..." means many different things and is open to discussion.

Closed verbs are specific and convey common meanings to people. They close the door on misinterpretation. Here is a partial list of closed verbs grouped in categories. You can use this list to write objectives in the cognitive domain. As you design your courseware, you may want to refer to page 101 often.

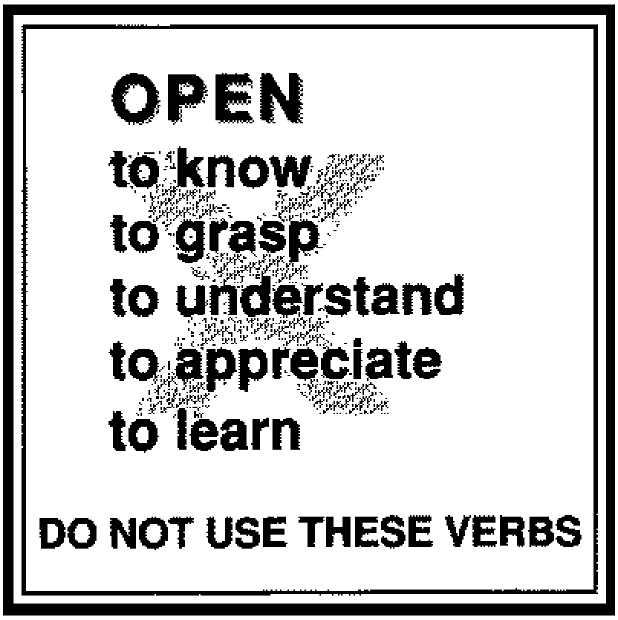

A verb list for stating cognitive objectives.

(Classification based on Bloom's taxonomy of educational objectives - cognitive domain).

Knowledge	***Comprehension***	***Application***
define	translate	interpret
repeat	restate	apply
record	discuss	employ
list	describe	use
recall	recognize	demonstrate
name	explain	dramatize
relate	express	practice
underline	identify	illustrate
	locate	operate
	report	schedule
	review	shop
	tell	sketch
Analysis	***Synthesis***	***Evaluation***
distinguish	compose	judge
analyze	plan	appraise
differentiate	propose	evaluate
appraise	design	rate
calculate	formulate	compare
experiment	arrange	value
test	assemble	revise
compare	collect	score
contrast	construct	select
criticize	create	choose
diagram	setup	assess
inspect	organize	estimate
debate	manage	measure
inventory	prepare	
question		
relate		
solve		
examine		
categorize		

Object

The third part of an objective is the **object.** Let's continue with the same example using the preamble, the verb, and then the object. "At the end of this module, you will be able to write a **performance objective."** The object, a performance objective, is the object of the verb write. It clearly shows students what you want them to learn or do.

PREAMBLE	**The student will be able to**
VERB	**write**

PREAMBLE	**The student will be able to**
VERB	**write**
OBJECT	**a performance objective.**

Exercise 2

Now let's take a break from inputting information and practice.

1. Write two variations of a preamble.

Example: At the end of this chapter, you will be able to:

a. Preamble ___________________________
b. Preamble ___________________________

Look at the verb list for stating cognitive objectives for some ideas. Maybe you can think of a new one.

2. Now let's tie these preambles to verbs. Look at the list on page 101 and select different verbs to go with your preambles.

Example:

PREAMBLE At the end of this chapter, you will be able to
VERB write

a. preamble ___________________________
verb _____________

b. preamble ___________________________
verb _____________

3. Now connect the preamble and the verb with an object. Think of two objects or contents from your teaching experiences and place them with the preambles and verbs.

Example:

PREAMBLE At the end of this chapter, you will be able to
VERB write
OBJECT performance objectives.

a. preamble__________________________
verb _____________ object _____________.

b. preamble __________________________
verb _____________ object _____________.

Congratulations! You have just written two learning objectives which clearly show students what you expect them to do.

Qualifiers and quantifiers

We can be more exact about what we want students to do by adding explanatory words called **qualifiers** and **quantifiers.** They show restrictions, allowances, or givens.

A. ***Qualifiers.*** You can put the **qualifiers** before or after the preamble, but be consistent in their use. In these examples, verbs are in italics and qualifiers are boldfaced.

1. At the end of this chapter you should be able to *identify* the 5 insects **without the aid of a microscope.**

2. When you finish reading this, you can *draw and label* the parts of the rice seed **with the aid of your microscope.**

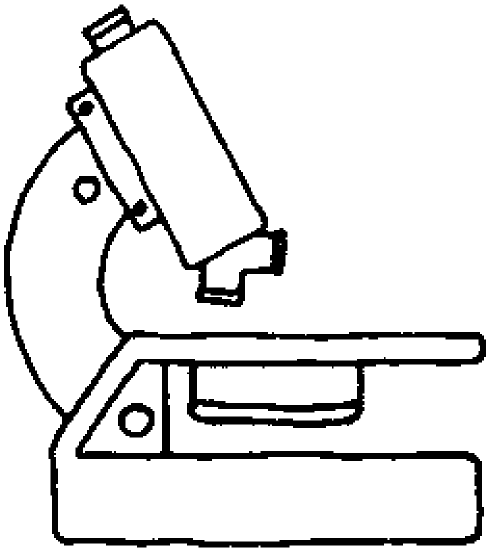

3. In the next exercise, *answer* the 20 exam questions **in 15 minutes.**

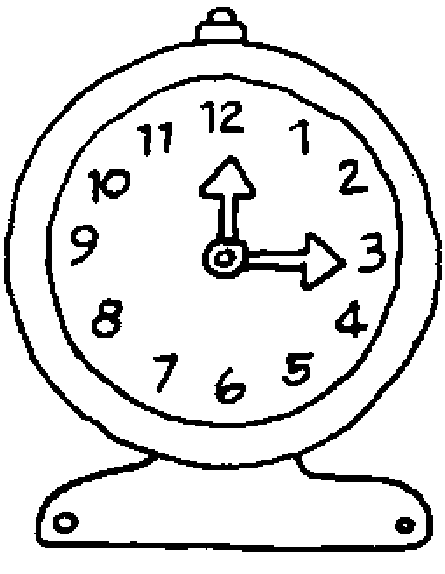

B. ***Quantifiers****,* or numbers, make the directions more explicit and help your learners remember better. Note the numbers in the previous objectives: Identify 5 insects. Answer *20* exam questions.

NUMBERS
ARE EXPLICIT:
1, 2, 3 ...

Turn to Chapter 2, and study the objectives. Notice the explicit quantifiers. It is better to use numerals (1,2,3,...) rather than written numbers because they are easier to see in the text.

For example, there are 4 major steps in writing objectives:

1. Select and write a preamble.
2. Select and write a verb.
3. Select and write an object.

   • Select and write a qualifier.
   • Select and write a quantifier. AND

4. Chunk. We'll study this one next.

Chunk

Another element that we can include in a learning objective is the chunk. The process of chunking is detailed in Chapter 4. Chunking is making a block or "chunk" of information that makes the objective even more explicit. It also provides immediate feedback. You place it underneath the objective.

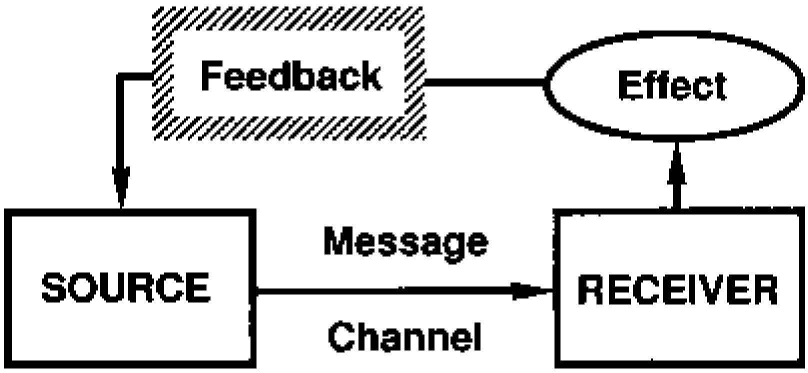

For example:

Objective - List the 4 major parts of a performance objective:
Chunk- 1. preamble
2. verb
3. object
4. chunk

Notice that the chunk

• is underneath the objective,
• gives a short answer to the objective,
• provides immediate feedback, and
• makes the objective explicit.

Try to include graphics, diagrams, or pictures in the chunk to help students remember the information.

For example, here's a diagram of the parts of an objective.

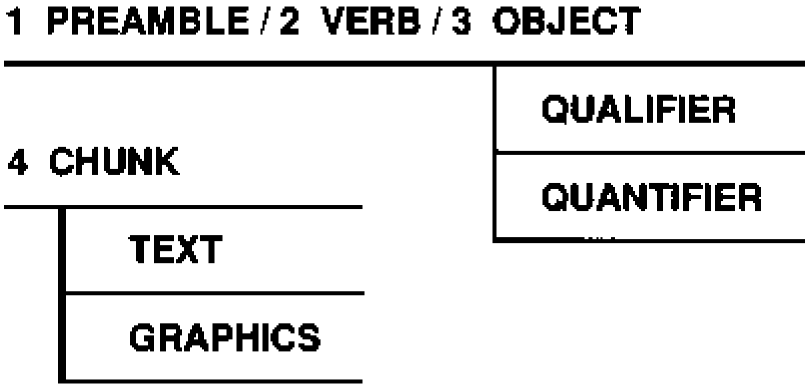

The objective would read, "The trainee will be able to list and relate the 4 primary parts and any subparts of a performance objective."

In the chunk, the positions of the words on the diagram help show the parts and their relationships with each other. The positions of the words are especially useful in showing relationships in statistical formulas, sentence diagrams, machinery parts, life cycles, morphology, and geography.

Here are two more examples:

Objective: Describe the life cycle of a rice stem borer.
Chunk:

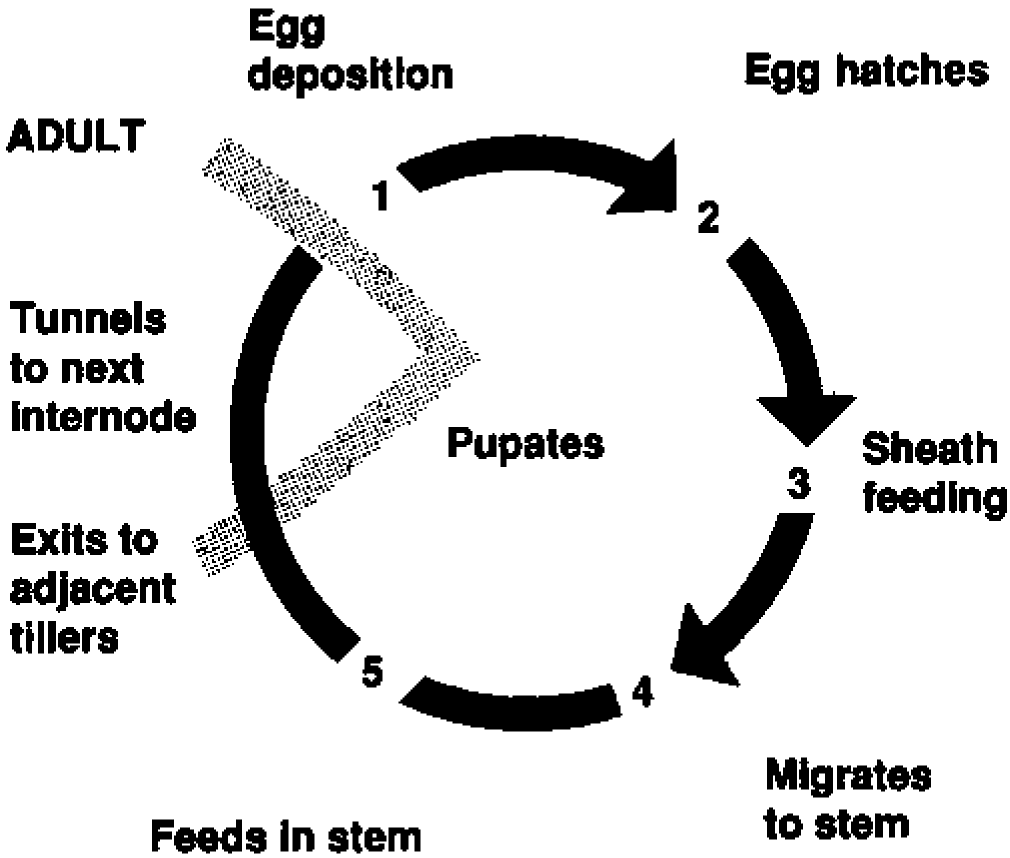

Objective: Name the parts of the rice floret.
Chunk:

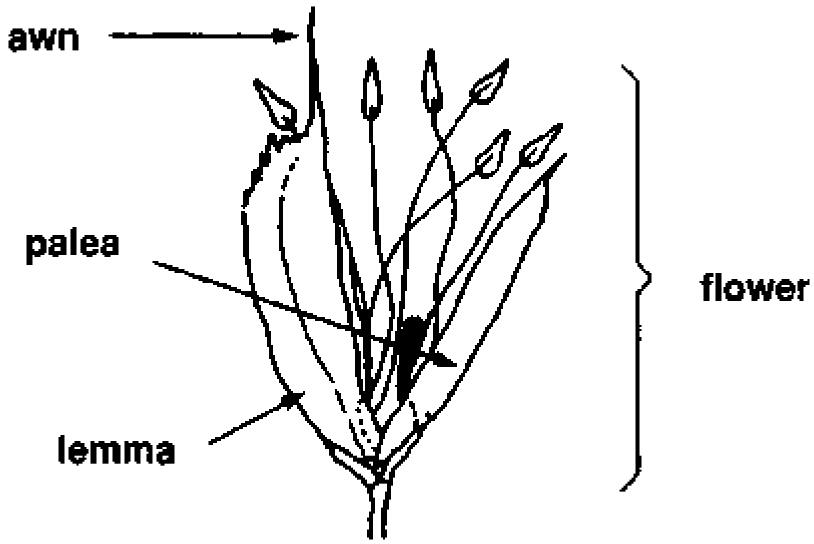

Thus, chunks can be either verbal or visual (pictorial). Try using a lecture handout to practice writing objectives.

Prospectus and rationale

What and Why

Two other concepts that tell the student what the lesson is about are the **prospectus** and the **rationale.**

The prospectus tells *what* is the overall goal of the module. For example, the prospectus of this module is that it contains information that will prepare you to write performance objectives.

The **rationale** explains *why* the subject matter is important. For example, instructional objectives provide an important tool in the learning process by

- defining acceptable student behavior,
- making a contract between the instructor and learner,
- organizing information,
- allowing the learner to self-evaluate,
- explaining concepts,
- reducing learning time, and
- providing the means for feedback.

Exercise 3: Writing objectives

Now please turn to the performance objectives at the beginning of this chapter.

If you didn't find any, don't be alarmed; your guide is all in one piece. We left the performance objectives for you to write as a practice exercise. Using your verb list, go through this chapter from the beginning, writing and chunking objectives from the content material.

Using a sheet of paper, write at the top:

Prospectus: already written

Rationale: already written

Objectives: At the end of this module, you will be able to

- ______________________________
- ______________________________
- ______________________________
- ______________________________

etc.

The answers follow, but please don't peek until after you've had a try.

Perhaps you arranged your objectives in a different order. Your chunks may be different. The focus of your objectives may be narrower or broader.

When **you** write the objectives, **you** can choose the material you want the student to learn. **You** are creating the contract with the student. It's your intent! Your focus! Your power! Use it to teach!

If you feel you still need more information about objectives, read about norm-referenced and criterion/mastery-referenced instruction in Chapter 10.

Answers to Exercise 3

Objectives: At the end of this chapter, you will be able to

• List and define the 3 learning domains.

cognitive
affective
psychomotor

• Define in your own words the concept of performance objective.

desired outcome
contract
intent
focused behavior change

• List 2 words associated with student behavioral action and instructional objectives.

Do
Verb

• Write 2 preambles.

• Relate the learning domain addressed by this guide.

cognitive

• Compare open and closed verbs associated with objectives.

open - ambiguous; should not be used
closed - explicit; should be used

• List in sequence the 4 primary parts of an objective.

preamble
verb
object
chunk

• Describe qualifiers and quantifiers.

make objective explicit
qualitative
quantitative

• Define a qualifier.

givens
allowances
restrictions/limitations

• Discuss a quantifier.

numbers

• Relate a rule in using quantifiers in objectives.

use numeral notation

• Review 2 types of chunking.

verbal
pictorial

• Associate 2 words that describe the intent of prospectus and rationale.

prospectus - what
rationale - why

Study example of a rationale on page 109.

• Relate 7 advantages of using instructional objectives in the learning process.

• Write behavioral, performance, instructional objectives for Chapter 6.

Feedback exercise

• Match the learning domains with the term that best exemplifies their meaning.

___ psychomotor	A. quantifier/qualifier
	B. skill
___ cognitive	C. knowledge
	D. chunking
___ affective	E. emotional

• What word would best define the concept of a performance objective?

____

• What part of speech is best associated with writing a performance objective?

____

• The first portion of an objective is referred to as the __________________________.

• Place the 4 primary parts of an objective in their correct sequence.

1 object
2 verb
3 chunking
4 preamble

• In objective writing, use of numerical notation is associated with a ________________.

• Describe a chunk.

• Statement of purpose in a module is made of 2 parts - defining the general intent and the advantages. Name these 2 parts.

____
____

Answers to feedback exercise

• B, C, E • Contract • Verb • Preamble • 4,2,1,3 • Quantifier • Last part of objective giving student verbal or pictorial feedback associated with the objective contract • Prospectus Rationale

References and information of interest

Anderson R and company, eds. (1969) Current research on instruction. Prentice-Hall, Inc., Englewood Cliffs, New Jersey.

Bloom B S, ed. (1956) Taxonomy of educational objectives; handbook I. Cognitive domain. David McKay, New York.

Commission on Undergraduate Education in the Biological Sciences (1971) The use of modules in college biology teaching. J. G. Creager and D. L. Murray. CUEBS, Washington, D.C.

Fisher K M (1976) A-T science teaching: how effective is it? Biol. Sci. 26:691-697.

Friesen P A (1973) Designing instruction. Miller Publication, Sta. Monica, California.

Gueulette D G (1982) Microcomputers in adult learning. Follet Publication Co., Chicago, Illinois.

Anonymous (1973) Individualized instruction goes to college. Mosaic NSF 4(l):10-15.

Johnson R B, Johnson S R (1971) Assuring learning with self instructional packages. Self Instructional Packages, Inc., Chapel Hill, North Carolina.

McKay R (1971) Is programmed instruction for extension? J. Ext. 9(3):18-23.

Mager R E (1962) Preparing instructional objectives. Fearon Publishing, California.

Schom C B (1978) Teaching techniques: do results differ between approaches? AIBS Educ. Rev. 7(1):15.

John A, Barnes R D (1978) A cost analysis of audiotutorial and conventional instruction. AIBS Educ. Rev. 7(l):10-ll.

CHAPTER 7. The Script

Now that you know about writing the prospectus, rationale, objectives, and chunks, we will change the style of the chapter introductions to fit this learning technique.

Prospectus

What: This chapter will help you create the script for your program.

Rationale

Why: The script is an essential part of an A/I program. It provides the basis for both written and oral communication. You also use it as a blueprint as you create and apply learning techniques and decide on visuals.

Objectives

At the end of this chapter, you will be able to

• Explain why learning materials often fail to communicate.

- written to satisfy peer and colleagues rather than students

• Relate 4 rules that will help you communicate better and focus your writing style:

- dismiss peers
- assume role of student
- use teaching principles
- assume students have no prior knowledge of your material

• List 5 guidelines to develop a good writing tone for the narrative script.

- informal
- conversational
- humor
- questioning
- reward

• Discuss a simple method to find the best style and tone to fit your audience.

- pilot feedback studies of different styles and tones

• Appraise the 3 parts of a frame format.

visuals - verbal and pictorial
script - verbal and narrative
comments - evaluative and direction notes

• Restate the order in which you should develop visuals and script.

- script first
- disregard visuals initially

• Discern the constraints of slide trays when deciding how many slides to use in your program.

80 slides
120 slides

• Specify the maximum length of time for narration during each slide.

15-20 seconds
30 seconds

• Discuss the reasons for the narrative time/slide suggestions.

learner becomes passive

• List and discuss 5 approaches used in generating script for PI.

outline
lecture narrative
direct frame narrative
instructional objectives
vocabulary

• Describe the storyboard approach in organizing a modular A/I program.

focus content material from general to specific using material reference cards (frames) in a sequential process

• Explain why the storyboard is popular.

presents whole view of material

The technical storyteller

Essentially much of our learning-formal, informal, or technical-has evolved in a storytelling format. In technical learning, the teacher acts as a well-informed storyteller presenting information at a rate determined by the subject matter.

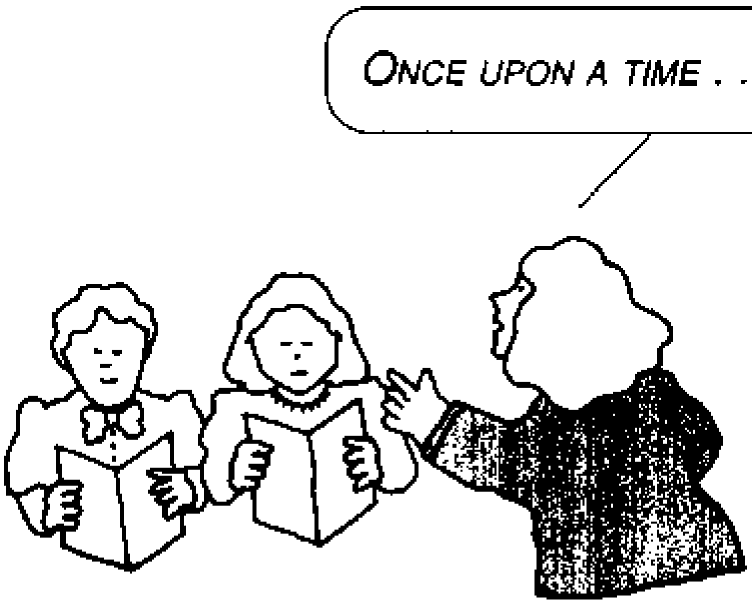

Writing style

Focus

Some technical writing guidelines have evolved because of their efficiency in communicating between professional peers.

Because most authors are professionals, they often use this technical writing style. As a result, much of the learning materials written for students are extremely formal, stilted, and ineffective.

Because the learning material is written for peers and colleagues rather than students, the material does not communicate with the intended audience.

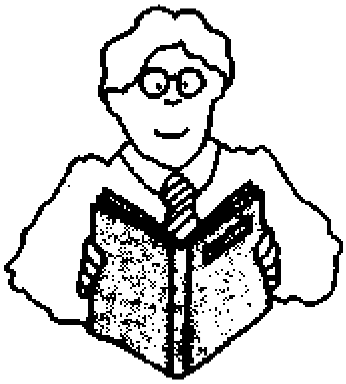

The **vocabulary** is very important and should fit the student level. Although it may be difficult with technical information, keep it simple. In fact, let the student level dictate the writing style you use.

Use effective teaching principles:

- small steps
- feedback
- repetition
- reinforcement

Start at the beginning and assume that the student knows nothing about your subject. The challenge in creating A/I modules is to make the complex simple in a creative way.

It starts with the script.

***Note:* Be careful that your humor does not offend any of your students. For example, if you are a lecturer, see page 192. Some might be offended by this example.**

Tone

Students learn faster if you adopt a particular writing tone. Often the tone may seem contrary to the formal methods of teaching.

Here are some **tone guidelines:**

- informal (relaxes)
- conversational (more action)
- humor (pauses for mental refreshment)
- questioning (enhances learning by the repetition principle)
- reward system (use of encouraging remarks)

Arriving at a style

Objective feedback from your students is one method of developing a style that communicates effectively with them.

Develop and pilot several experimental styles and test them on your students with a simple attitude questionnaire.

For example, here is the start of a simple attitude questionnaire:

Read the 3 samples of information labeled A, B, and C.

1. Which sample did you enjoy reading most?

    A_____ B ____ C____

Why? ___________________________

2. Did you enjoy the conversational tone used in sample A?

    Yes ______ No ______

3. Did you find the humor entertaining?

    Yes______ No ______

4. etc.

When you become a script writer, you will find that writing for a spoken presentation is much different than writing for a publication.

After writing your script, **read it aloud** and listen to how it sounds. Read it to a few of your students and get feedback.

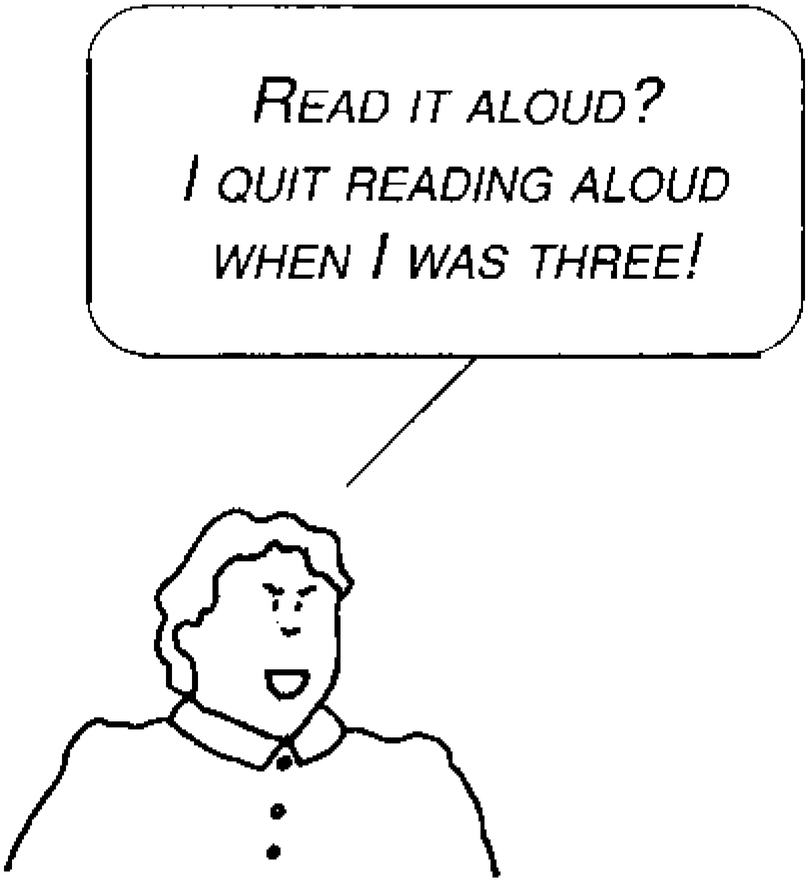

Use contractions such as isn't, don't, and doesn't. Don't hesitate to use phrases that you use in conversation but usually don't write down. Avoid putting words together that start with the same letters and form tongue twisters!

Remember to focus on the spoken word.

After you determine what style appeals to your audience, you may find that you feel awkward writing this way at first. The style may feel contrary to your professional training and values. Some of the comments of professionals attempting this for the first time sound like this.

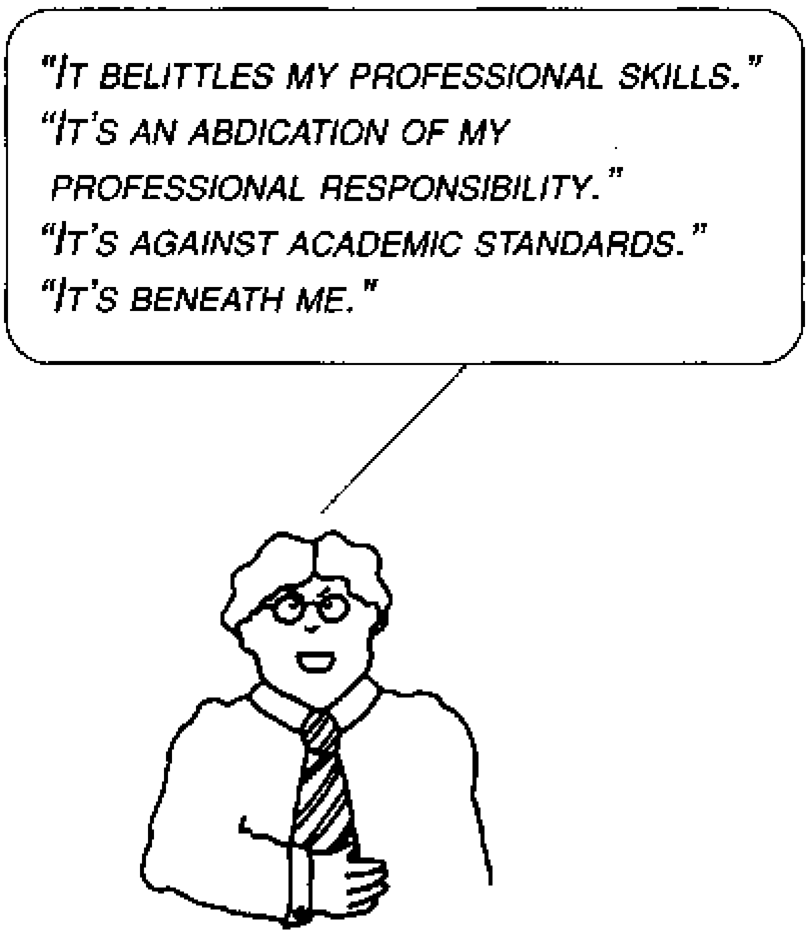

We must weigh these feelings against the responsibility of helping students learn the knowledge, attitudes, and skills we have to offer. We can view this as a new professional opportunity to deviate from the formal technical writing style and make learning enjoyable.

Whatever your feelings, the objective data from your pilot research with your script will help you balance and justify your style of communication to yourself and your colleagues.

A Summary

When creating your script, an essential step is one of attitude and role playing. Some rules of the role are to forget your peers and colleagues. They already know the information. As you create, pretend that you are a student.

Another method of arriving at a style and tone is to **tape your lectures** or an actual tutoring session with a student. If you teach a laboratory class, tape the session while you are actually using and explaining the specimens.

Later, when you transcribe and edit the tape, you are actually writing the script.

What if you don't have a tape recorder, typewriter, or typist? You can still use the script writing and role playing approach.

Note: As mentioned in the preface, the intended audience of this guide is primarily professionals with a scientific or technical background who desire to create an A/I module for student learning.

The frame format

Keeping to your style, create your story (module, lecture, information) by breaking it down into small units called **frames.**

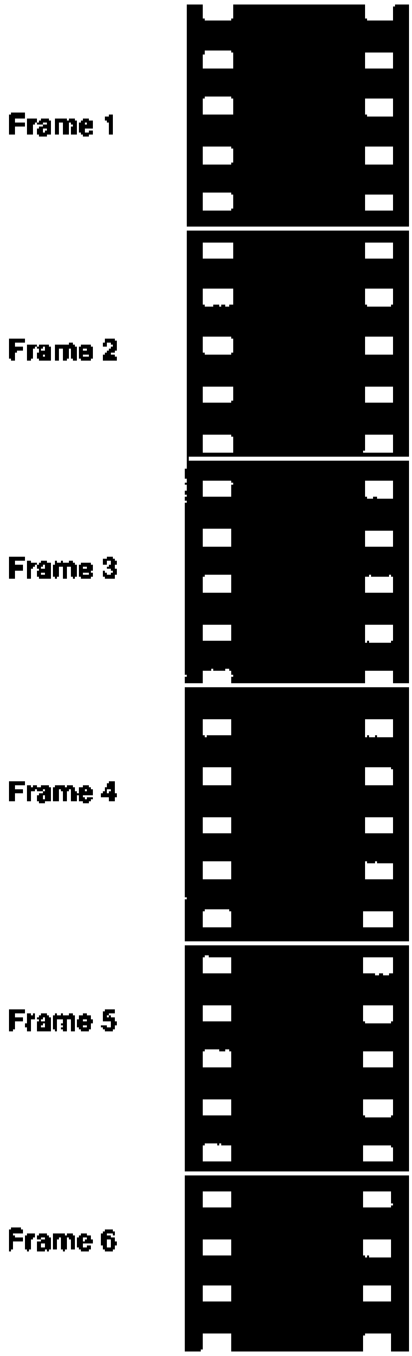

There is nothing magic about the frame format! It's just a convenient method of organizing information. You begin by making frames on strips of paper, index cards, or other materials that you can deal, stack, arrange, and rearrange. Divide each frame into thirds. One space will be for visuals, another for the **written script,** and the third for **comments,** instructions for graphics, sound or other production techniques.

VISUAL	**THE WRITTEN SCRIPT**	**COMMENTS**					

Make a row of small blocks horizontally across the top of the comment space. Use these to renumber the sequence if you want to rearrange your story.

For example, we have rearranged this frame from position 6 to 8 to 12 in the process of creating a story.

		6	**8**	**12**			
		COMMENTS					

An example frame:

VISUALS	**SCRIPT**	**COMMENTS**					
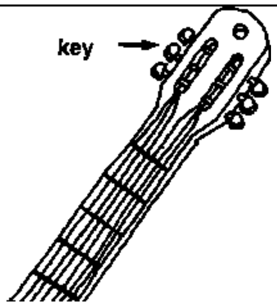	Tune a guitar string by twisting the *keys* which are attached to the strings. By twisting the *keys,* the strings will be either tightened or loosened making a higher or lower *tone.*	Make strings and frets stand out. Make the keyboard of a different color than top. Accent underlined words.					

It is best to create your story in words first, and then match your picture story as a support element later.

Here is an example of a **script** written in the frame format:

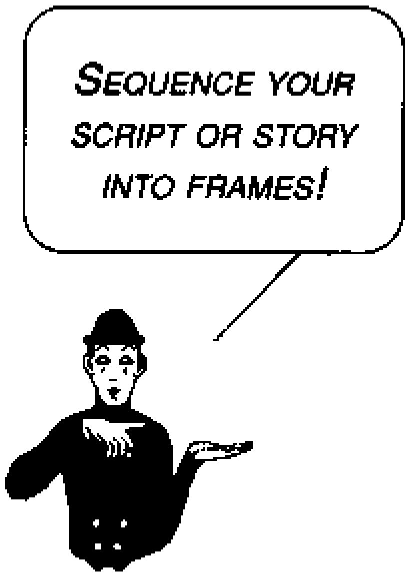

		1					
	Welcome to Module Seven in our series of modules on A/I production.						

		2					
	This module will provide you with information that will help you create the script of your A/I program.						

		3					
	The script is also the blueprint for exposing the learner to content information.						

		4					
	The script is an essential part of a module. It provides the basis for both the written and oral communication,						

		5					
	and for applying learning techniques.						

		6					
	It also forms the backdrop for visual communication.						

Of course, we have just repeated the introduction of this chapter using a framing technique. Notice that we have broken the introduction down into 6 frames. Each frame focuses on some important aspect of the script.

You continue to write your script in this manner.

Editing the number of frames

As you use frames to tell your story, you will discover that presenting your modules in the frame format also has limitations. One of these is the number of frames that will fit into a slide tray for viewing. Most popular slide trays hold 80 or 120 slides.

For management purposes, it is best not to split modules into two slide trays. Therefore, keep your story within the maximum limits of 80 frames if possible at all, or no more than 120 frames. Since our introduction example already used up 6 frames, it would be better to save some of these frames for more important content information. **Remember, limit your story to 80 or 120 frames.**

Here's an edited version of our 6-frame script.

		1					
	Module Seven will provide you with information to create the script, an essential part of your A/I program.						

		2					
	It provides the basis for both your written and oral communication, for applying learning techniques, and forms the backdrop for visual communication.						

Note how we edited the 6-frame example we had earlier. The script from frames 1,2, and part of 3 are now condensed into frame 1. Frames 3, 4, 5, and 6 are condensed into frame 2 of the sequence.

Editing time/frame

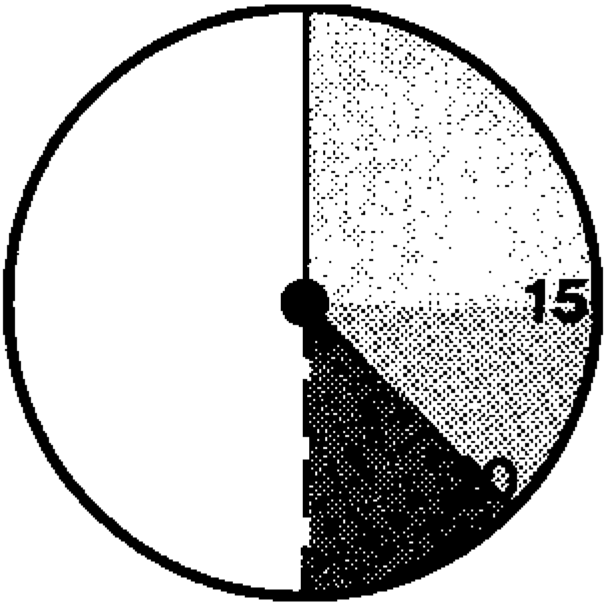

script or narration time per frame

Script time per frame should run from **15 to 20 seconds,** 30 seconds on rare occasions. One reason that modules are very effective is that students are involved with adjusting to the frames and story movement. When there is too much talk per frame, they are on the screen too long, and the student becomes passive.

To check on the length of narration per frame, read the script slowly out loud and record the number of seconds. If it is longer than 15-20 seconds, simplify your thoughts, reduce the number of words in the script, or break it into extra frames.

Organizing information

One of the creative challenges of developing A/I programs is trying to organize information into sequential frames, putting content in the right order, keeping the script within the time limits, and limiting the presentation to 80 frames. Super-organization and prioritizing of material are essential.

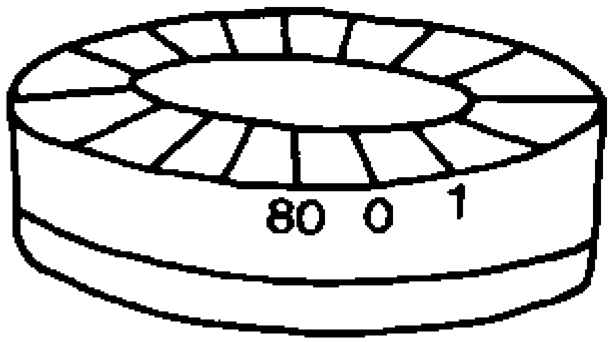

Here are some tips on how to do it.

- Some people first develop an outline and then write the story from the outline.

- Others write materials in the form of a lecture and then translate the lecture to frame format.

- Still another method is to create the narration or script directly from memory as you progress.

- Another option is to break a lecture into instructional objectives and then construct frames from the objectives.

- We have mentioned that you can tape lectures and work from them.

- If there are many introductory vocabulary words, you can create your story from a prioritized list of vocabulary words.

Note: There isn't really any correct method; use whatever method works best for you based on your past experiences.

The storyboard

One approach that has been devised is called a **storyboard.** It is similar to an activity calendar. It is a large board made up of numbered squares. You also can use a table top or floor.

You can fold the frame strips so that the narration is on the outside so that you can see it. Then you can *deal the strips like cards* on the storyboard, table, or floor. You can pin the frames to each square in the order that you want the material to appear. With the narration on the outside, it will be easy to see if you have them arranged in the right order. You can also rearrange them easily. The storyboard gives you a good overview of the story.

Start with an outline of the story. Sequence the outline on the board and number each square with Roman numerals. Then address each outline point in sequence and add squares of paper containing the subpoints or tasks. Put these on the board in the desired sequence.

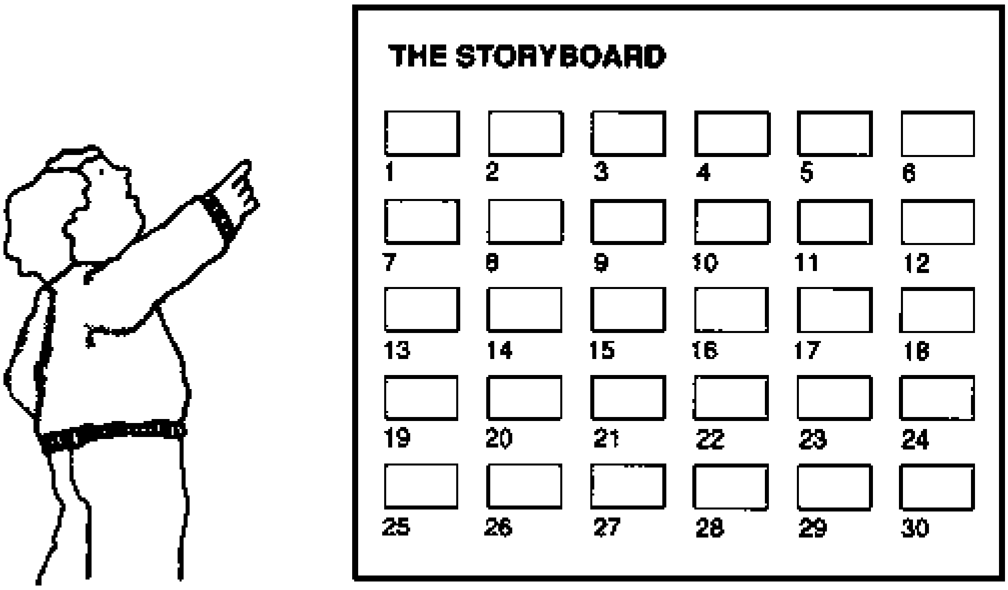

After the main outline point, you may have to number and remove the squares because the whole story will not fit on the board. Finally, break each subpoint into frames. Place these on the board in the order set by the outline.

Summary

Steps in storyboarding:

1. **Write outline on paper squares.**
2. **Pin on storyboard.**
3. **Observe sequence.**
4. **Rearrange and confirm sequence.**
5. **Number slips and remove.**
6. **Write subpoints associated with Roman numeral I of your outline.**
7. **Repeat steps 2-5.**
8. **Write information frames associated with each subpoint.**
9. **Repeat steps 2-5.**

Now is a good time to edit the length of your script to 80 or 120 frames. Just staple or pin frames together in sequence; then rewrite the story to include all the frames of outline points, subpoints, and associated frames not to exceed 80 or 120.

Feedback frames

Periodic processing and recall of information assists retention. To help students learn through review, try to highlight the major points in a module by reserving some frames for review or feedback.

Construct a feedback exercise every 16-20 frames. This will

- organize and separate concepts,
- give a break or pause in instruction or a stopping point in the program,
- provide reinforcement through drill and practice, and
- involve students in active learning.

Be sure to reserve 6-8 frames for feedback questions or review and about 4 for introduction, ending, and credits. That reduces the program to 70 slides for content.

Progressive disclosure will also use up frame space. More on this later.

No matter which approach you use in creating your story or program, the storyboard is an invaluable tool in getting an overview and organizing the program.

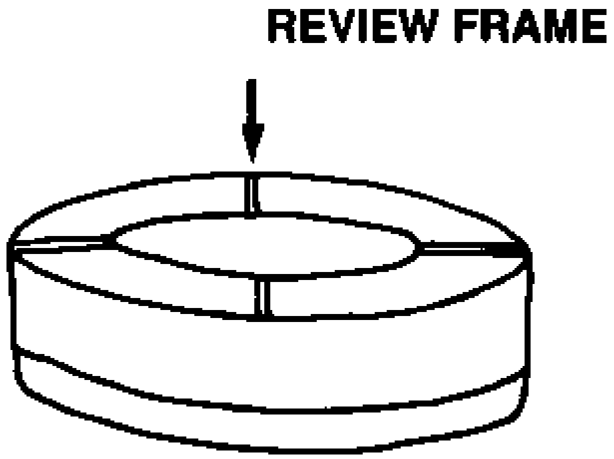

Transitions

Transitions are crossover words or phrases that tie concepts together. After cutting and editing your frames to achieve the proper length for your program, the right number of frames, and the right length of time/frame, your script will sound disjointed.

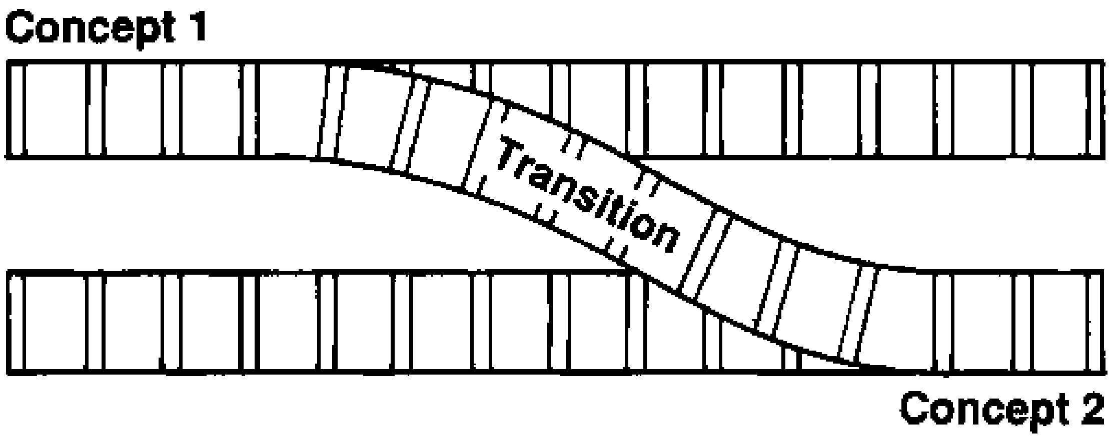

When rewriting the narration, use transitions to smooth the verbal flow and tie frames together. Transitions also provide a way to repeat information. Here are a few:

subsequently
because of
finally
accordingly
for example
however
in addition to
is divided into
is made of

In creating our module so far, we have worked only with verbal information. The next step is to create and correlate visuals to accompany the verbal script. We'll do that in the next chapter.

In the meantime, let's review the material presented in this chapter. The following feedback exercise will help you!

Feedback exercise

• In your opinion, is there any validity to the proposition that

> A significant amount of scientific and technical learning materials is written for peers rather than for students?

• What process can help the scriptwriter focus on the intended audience when writing student learning materials?

• Match the writing tone guideline with the intended goal.

____ informal	A. Promotes active mode
____ humor	B. Relaxes audience
____ questioning	C. Provides mental pauses
____ conversational	D. Aids learning by repetition

• What is an objective method of ascertaining the right writing style for your intended audience?

• What are the 3 parts of a frame format and what is each used for?

1. ________________ _________________
2. ________________ _________________
3. ________________ _________________

• In the initial development of an A/I program, state a rule of relationship between visuals and script.

• Check the numbers below that indicate the maximum number of slides an A/I program should have to keep within the constraints of a small slide tray.

_____ 60 _____ 70 _____ 80
_____ 90 _____ 120

• To keep students from becoming passive, what is the suggested length of narrative time per frame? (Encircle one.)

5-10 seconds
7-15 seconds
10-15 seconds
15-20 seconds

• Check which methods you prefer to use in generating your script.

_____ Outline
_____ Lecture narrative
_____ Direct frame narration
_____ Instructional objectives
_____ Vocabulary
_____ Storyboard
_____ Tape recording

• Why has the storyboard evolved as a mechanism for generating an A/I program?

Answers to feedback exercise

• No correct answer - it's your opinion

• Role playing; assuming the role on tape

• B, C, D, A

• Pilot studies of narrative style(s).

• Visuals - slides
Script - narrative
Comments - information, direction to artists, yourself, etc.

• Forget visuals, concentrate on narrative of teaching principles.

• 60,70,80

• 15-20 seconds

• No correct answer; individual preference

• Facilitates holistic approach to organization, sequential arrangement

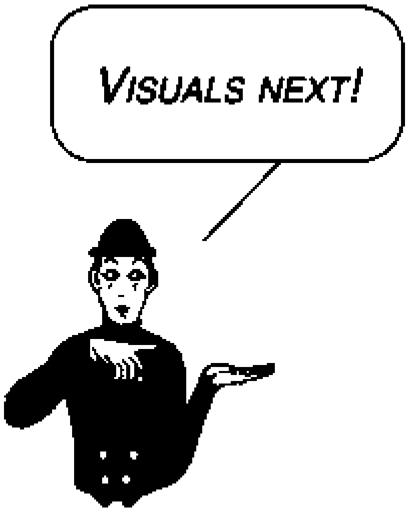

References and information of interest

American Association of Agricultural College Editors (1976) Communications handbook. 3d ed. Interstate Printers & Pub., Danville, Illinois.

Dwyer F (1972) A guide for improving visualized instruction. Learning Services, Pennsylvania State University, State College, Pennsylvania.

Eastman Kodak Company (1973) Legibility - artwork to screen. Rochester, New York.

Eastman Kodak Company (1972) Effective lecture slides. Pamphlet S-22. Rochester, New York.

Ertel R E (1979) The multi-image production. WTI Corporation, California.

Friesen P A (1973) Designing instruction. Miller Publication, Sta. Monica, California.

Frio A S (1977) Preparation and use of audiovisual communication media and materials. Department of Development Communication, University of the Philippines at Los Baños, Laguna, Philippines.

Grabow J, Wesley F (1982) Resources for teaching. NACTA J. 26(l):27-28.

Kemp H E (1968) Planning and producing audiovisual materials. Chandler Publishing Co., Scranton, Pennsylvania.

Minor E (1978) Handbook for preparing visual media. 2d ed. McGraw-Hill, Inc., New York.

Minor E, Frye H (1977) Techniques for producing visual instructional media. McGraw-Hill, Inc. New York.

Salmons N (1959) Planning and producing visual aids. National Photographer 10 (8 & 9) and Kodak (Pamphlet S-13). Rochester, New York.

Xuan Vo-Tong (1976) Visual aids, International Rice Research Institute workshop on field experiments (VII-4). International Rice Research Institute, P.O. Box 933, Manila, Philippines.

CHAPTER 8. Visuals

Prospectus

This chapter will help you create visuals for your A/I program.

Rationale

• Our A/I program uses visuals in both nonverbal and verbal learning.

• Visuals help students understand, retain, and remember information by uniting words with pictures (See Chapter 4).

• Visuals promote understanding in all of the learning domains.

Objectives

After the last few chapters, objectives may seem redundant. However, they provide a focus, and with chunking, can

- give a shorthand outline of the material
- measure the extent of your knowledge before you read the material, and
- provide a quick reference source.

At the end of this chapter, you will be able to

• List 6 situations where visuals assist learning.

1. magnifying/reducing
2. simplifying the complex
3. instructing through a visual vocabulary
4. motion demonstration
5. communicating in the affective domain
6. encouraging right brain learning

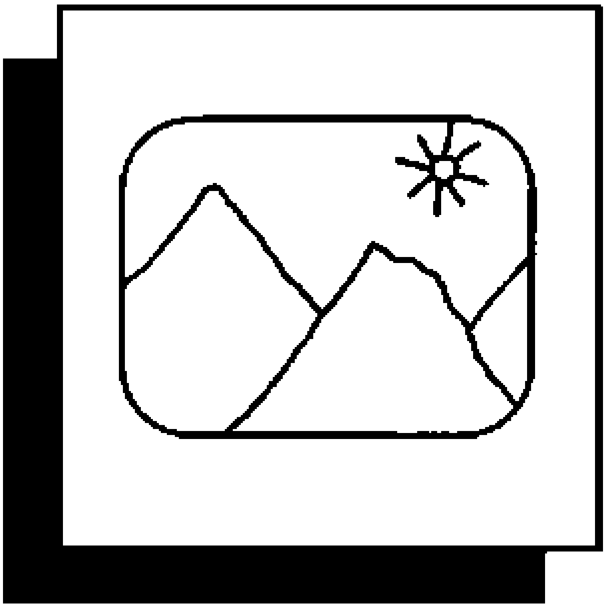

• Define an A/I slide

35 mm film mounted on a 2 × 2 in frame

• Describe the 4 types of visuals used in A/I modules.

word slides
graphics
photographs
combinations

• Give 5 reasons why titles are important on all types of visuals.

1. condensed verbal code
2. advanced organizer
3. cognitive bridges (verbal/visual)
4. subsumers
5. continuity of concepts

• Describe a task analysis of storyboarding visuals.

association of narration and visual
conceptualize visual
document visual and unite with narrative
search for ready-made visuals
create your own visuals

• Define visual style

consistent pattern of colors, contrast, and visual arrangements

• Recall 2 instances where word visuals are advantageous.

introducing abstract concept that doesn't provide convenient visual reinforcement
itemizing information

• List 3 rules of lettering.

use plain bold lettering
make discretionary use of capitals
avoid vertical lettering

• Recall 4 principles of letter spacing.

15-20 word limit (25-30 data)
abbreviated style
capital letter size or larger space between lines
maximum of 9 lines per slide

• Explain progressive disclosure.

sequential concept building

• Define a graphic slide.

diagrammatic or illustrative drawing of information

• Compile a list of mediums and techniques used in graphics.

pencil
ink
crayon
chalk
water color
paper cut-outs
direct use art (clip art, collage art)
dyes

• Relate and describe 4 elements of composition layout.

balance
emphasis / contrast
harmony
color

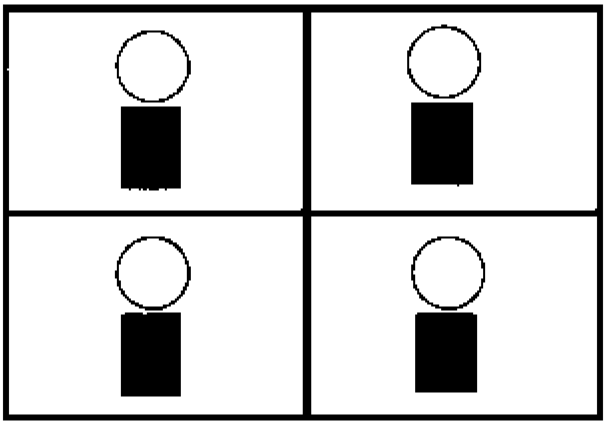

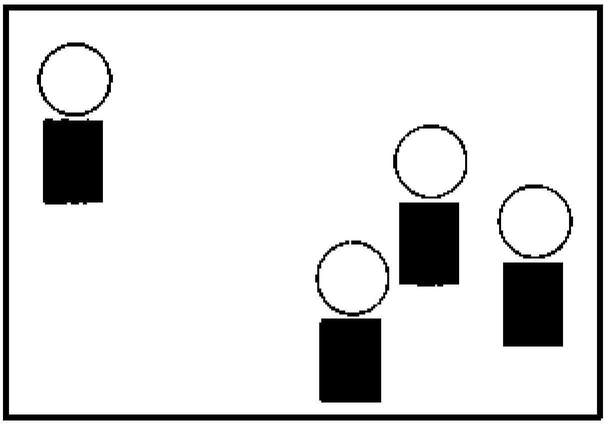

• Discuss 4 components of emphasis and contrast.

background
grouping
separating
integrating

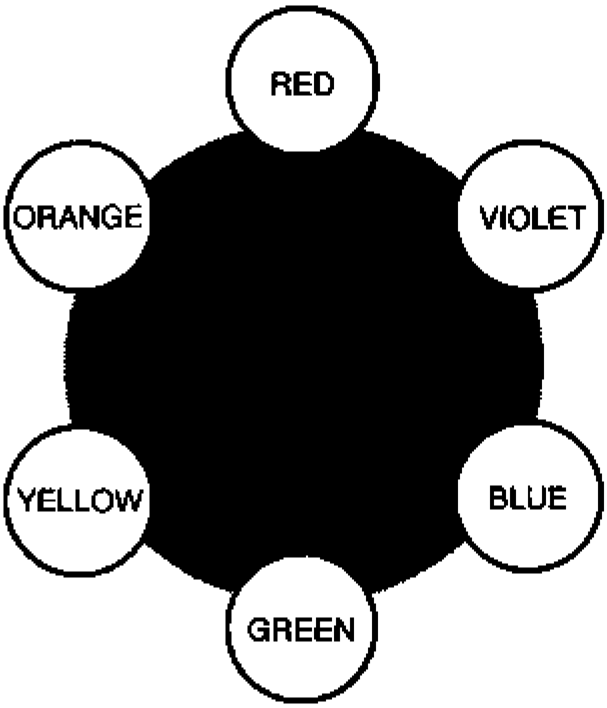

- Discuss 6 principles in communicating with colors.

    2-3 colors best
    cool colors -> recede
    warm colors -> emphasize
    adjacent use:

        similar = blend; NO
        light/dark = contrast; YES

    light colors on dark increase visibility

- Define 4 color systems.

    self-tone
    complementary
    analogous
    triad

- Recall the areas and standard dimensions for preparing graphic copy.

    outer area = 10 × 12 in (250 × 300 mm)
    neat area = 7 × 10 in (178 × 250 mm)
    information area = 6 × 9 in (150 × 225 mm)

- Explain the Rule of Seven.

    rule for readability:

        length of longest line × 7= viewing distance

- Recall principal considerations of using photographic slides.

    detail
    composition

- Restate a simple rule concerning photography.

    film is cheap
    time is not

- Recall 5 rules of labeling slides.

    concise/simple
    5 words maximum
    special focus on primary visual
    precise association of verbal/visual indicators (lines, etc.)
    titles unify labels and make a concept map

- Describe the equipment necessary to produce slides.

    camera
    lens
    flash
    tubes
    tripod
    release cable
    film
    copystand

How visuals assist learning

The next step in creating your A/I program is to produce key word (verbal) and/or pictorial (nonverbal) visuals to accompany **each frame** of your program.

Visuals are an exciting creative opportunity to help students learn. They use pictures to amplify, clarify, and reinforce the verbal narrative of your program.

We learn in two major ways. **One is by sound, the other is by sight.** Visuals relate to the world of sight. Research shows sight contributes to more than 80% of our learning. Sight lets us read words and distinguish figures and colors.

Visuals assist learning in 6 areas by

- magnifying or reducing the size of a subject so that it will fit into a classroom teaching situation (example: microphotography).

- simplifying a complex concept (example: diagram of nitrogen cycle).

- showing visually as well as verbally what the student needs to learn (example: morphology).

- showing motion or time lapse (example: dissections).

- showing verbal concepts.

- encouraging whole brain learning by requiring right brain participation (see Chapter 4).

- showing color changes (example: plant sickness).

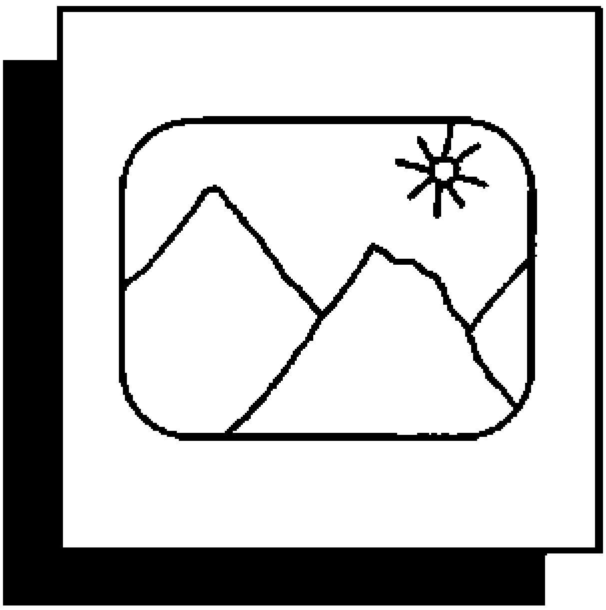

In this chapter we will emphasize slide production.

However, you can use the same principles to produce all types of visual media.

You can create pictures

- on paper
- on a transparency, as a slide, or filmstrip
- on a video tube.

Let's define a slide as a 35 mm transparency in a 2 × 2 inch frame to be projected on a screen by a slide projector.

> *Note:* The creation of visual aids as learning devices is a vast subject area, a complete discipline. We offer the following simple guidelines to help you create slides for an A/I program.

Visuals and the storyboard

A/I programs use 4 basic types of visuals:

1. **title or word frame slides**
2. **graphics**
3. **photographs**
4. **combinations of 1 and 3, or 1 and 2**

Now for the creative challenge of visuals! You have written your script on frames and put it in order using a storyboard. So far you have not put any visuals with your script.

		sequence
	SCRIPT	

Now, one frame at a time, using your script for cues, **visualize your program.** Decide which type of visual, words, graphics, or photographs will best illustrate each frame. As you plan, draw rough sketches in the visual third of each frame and make corresponding notes in the comments section.

VISUAL	**NARRATIVE**	**COMMENTS**
Step 2 MESSAGE 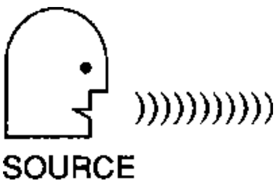	Step 2 in which the source sends a message.	Highlight message component graphics

Be sure to use simple one- or two-word titles and subtitles as headings at the top of each frame.

They are important because titles

- condense the script,
- connect verbal and visual concepts,
- organize the information around key words or anchors (subsumers-see Chapter 3), and
- give continuity and organization to the

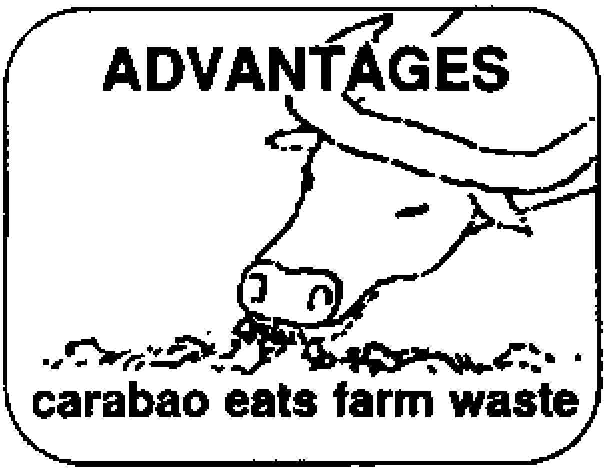

Ready-made visuals

As you plan visuals to support your script, try to remember slides or photographs from your existing collection. Since you don't have to work to create them, these are **ready-made visuals.**

Perhaps you can find pictures or diagrams from books or magazines. If so, either attach the picture to the frame, or make a note on the frame about the visual to help you begin to unite visuals with the script.

If visuals are not readily available from your own sources, attach a note describing what you need. Then look through library books, colleagues' slide files, and other resources to find the materials. **If possible, obtain visuals from ready-made sources.**

Be sure to heed the copyright laws. Most government materials do not possess copyright restrictions. Often a note to the publisher will obtain a release for local instructional purposes. Regardless of the source, give credit for any visuals you use.

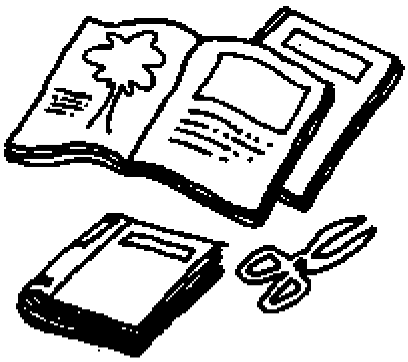

Create your own

However, if off-the-shelf pictures are not available, then make your own. Perhaps you have plans to publish and distribute your program. If so, it is better to make your own visuals.

Visual style

Establish a visual style by using a consistent pattern of colors, contrasts, and design. Some variety is desirable, but large swings in style may make your program seem bizarre.

Consult with artists and colleagues and get feedback from pilot surveys with students. Pretend that you are a student. What visuals would best explain the script?

If you have the resources, employ an artist to create visuals. However, many times these resources are not available, so we offer these guidelines to help you produce your own visuals.

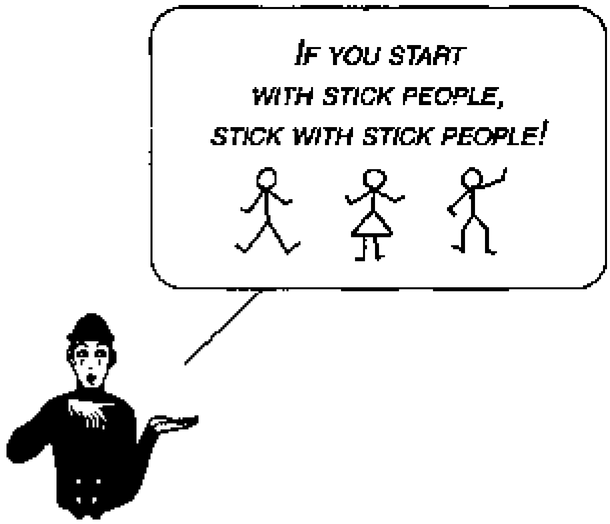

Types of visuals

Title or word slides

A book uses titles, headings, and subheadings to organize and introduce concepts. The same principle applies to the moving book of frames in your module. Also, we can use word slides when it is difficult to explain abstract concepts with pictures. Word slides also help us with review and summary information.

Whenever possible, reinforce the script with visuals. If more than 30% of your frames become word slides, perhaps you should reject the slide format and use written handouts or a tape.

1. ***Lettering****.* Word slides need good lettering. How do you begin?

- Select plain bold gothic letters without serifs or tails.

- Use lowercase letters which people can read faster than uppercase. Use capitals for emphasis and to lend variety.

- Avoid vertical lettering.

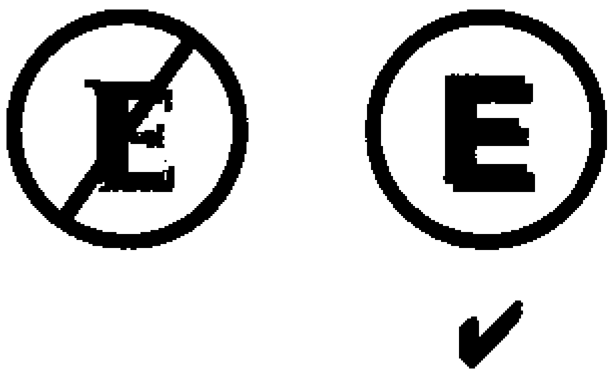

2. ***Lettering sources***. What types of lettering materials are available?

- The most common is the typewriter.
- Burnish or rub-on letters of various sizes are available at art stores.
- Removable plastic letters
- Cut-out letters
- Hand lettering
- Lettering machines such as the Leroy and instant print. **Consult an art catalog. Ready-made letters are convenient.**

3. ***Spacing letters***. In spacing letters, remember these tips:

- Limit each slide to 15-20 words (25-30 for data) and include no more than necessary.
- Allow a space between lines at least the size of a capital letter. Use more space if there is room.
- To prevent crowding, never put more than 9 lines on a slide. This allows 2 lines for a title and subtitle and 7 lines for an itemized summary. If you need more than 7 lines, use 2 slides.

TITLE
Subtitle

• ______________
• ______________
• ______________

See pages 12-14 for an example of progressive disclosure.

4. ***Progressive disclosure***. Progressive disclosure means to add each new point to those already presented. For example, if you want to present 4 points, the title and subtitle appear on slide 1, the title and subtitle plus point one on slide 2, the title and subtitle plus point one and two on slide 3, and so on until all points are covered.

As you disclose each new point, highlight it by using a different color. For example, the title and subtitle on slide 1 may appear in red. On slide 2, the title and subtitle could be green, and point 1 a contrasting color like red. On slide 3, the title, subtitle, and point 1 could be green and the new point 2 red.

You can use progressive disclosure with graphics as well as with word slides.

Graphics

Graphic slides include charts, graphics, cartoons, or any diagrammed drawings that instruct without using an actual photo. Depending on the style you want and your artistic ability, you can make them simple, detailed, or very realistic. In many cases, graphics are more effective teaching aids than photographs.

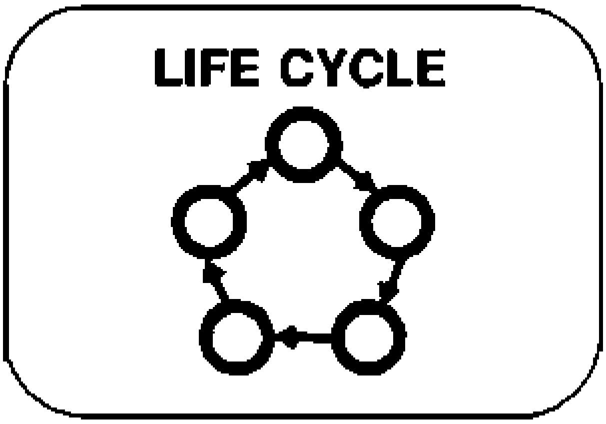

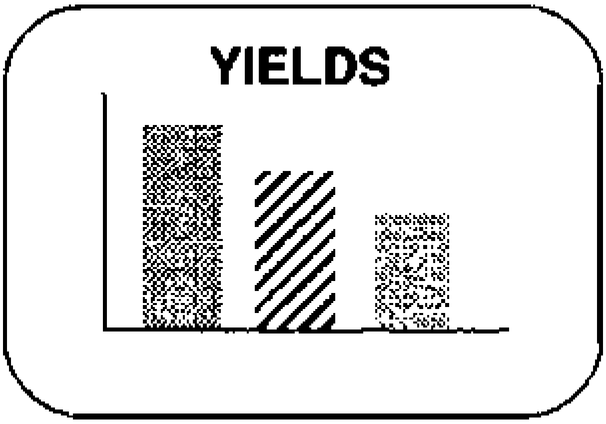

1. ***Mediums and methods**.* Try these to create your own graphics.

- Use colored pencils, crayons, chalk, or pen and ink for line drawings and fill-in areas.

- With a little practice, watercolor is another fill-in medium that is fast and easy to use.

- To produce special effects, make cutouts from colored panels, velour, gummed corrugated paper, or plastic sheets.

- Rolls of adhesive-backed paper and plastic tape of various widths and colors are available for making lines and shading graphic art.

For example,

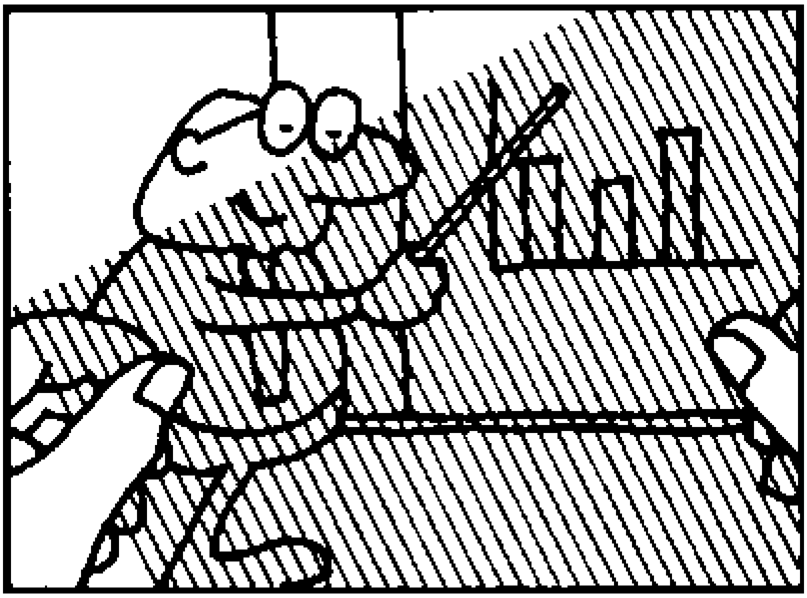

a. Make a line drawing.

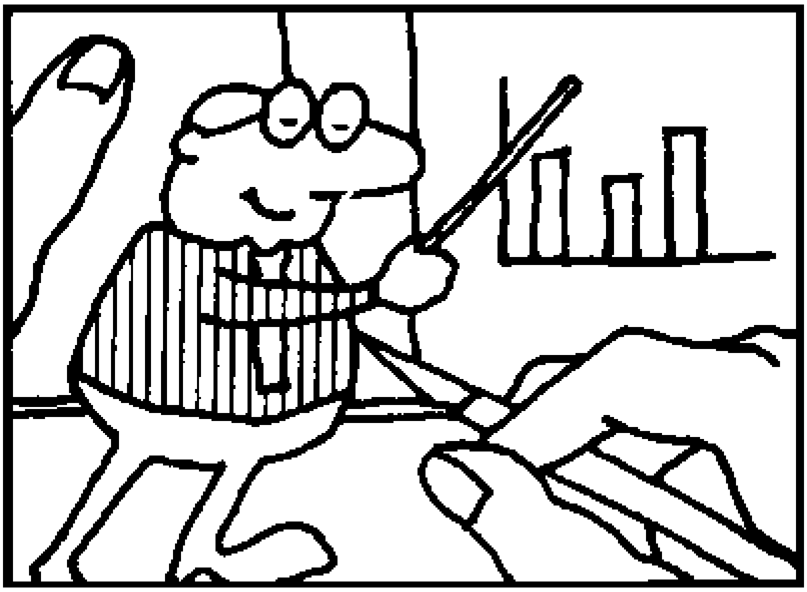

b. Cover with shading film, and cut around lines.

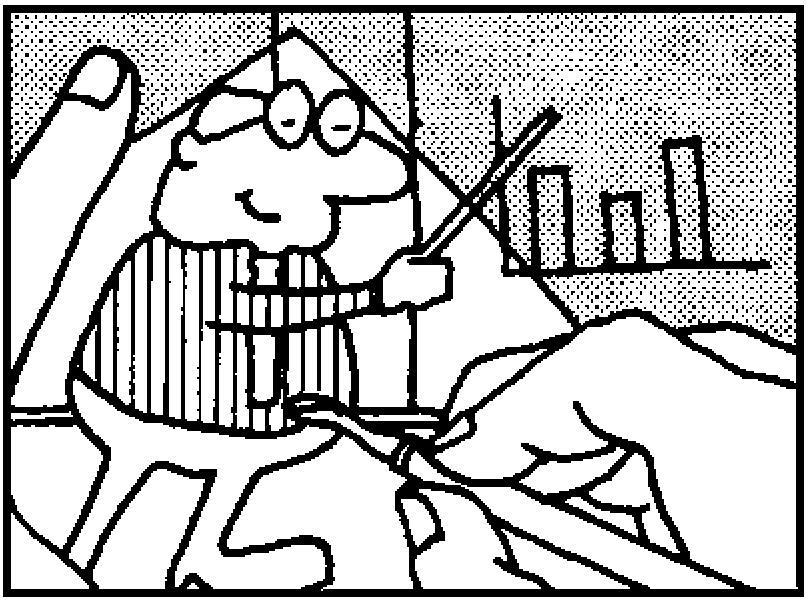

c. Rub with a burnisher or cloth to make the shading film stick to the line drawing.

• You can combine shading film with “direct use” images that eliminate the preparation of line drawings. One type is called **clip art.** You can buy a book that contains ready-to-use line images, symbols, and borders for every practical subject. You can cut out the image and paste it onto the design you are creating. To save the book, you can also trace or xerox it and use the copy. Be sure the copy is clear.

People from other countries should try to modify clip art visuals so that they look like people or objects from their own countries. This will add a great deal of credibility to their modules.

Other direct images are available in acetate, module form, and dry transfer acetate medium.

You can also use another type of art called the **collage** technique, where you cut parts of pictures out of magazines and reassemble them to portray a new concept.

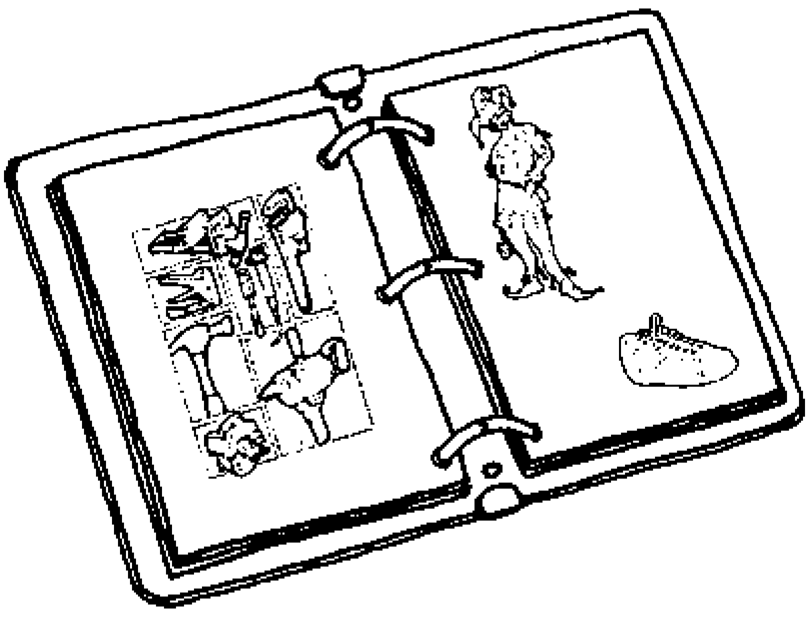

2. ***Layout and composition***. The way you arrange images in the visual space can help communicate your messages more clearly. We call this arrangement *composition,* and it has 4 important elements: **balance, emphasis and contrast, harmony,** and **color.**

• Balance - If you divide your slide into quadrants, **balance** refers to the way you distribute items within the quadrants. Balance may be formal, distributed equally, or informal with an unequal distribution. Informal balance is much more normal and pleasing to the eye.

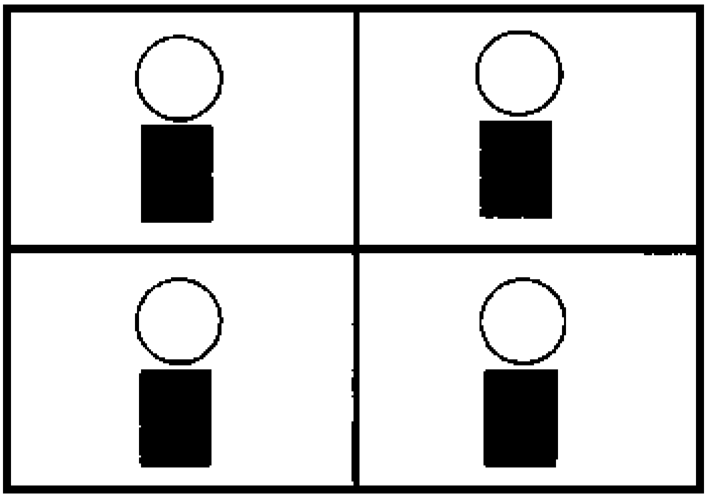

FORMAL BALANCE

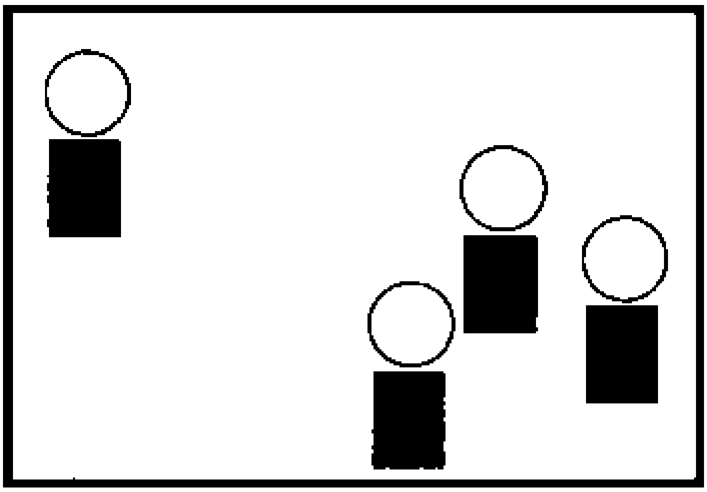

INFORMAL BALANCE

• Emphasis and contrast - There are 4 major ways by which you can **emphasize and contrast** elements within your slide. You can adjust the

a. background
b. grouping
c. separation
d. integration

The **background** of a slide is important. It forms the backdrop and contrasts with the other images.

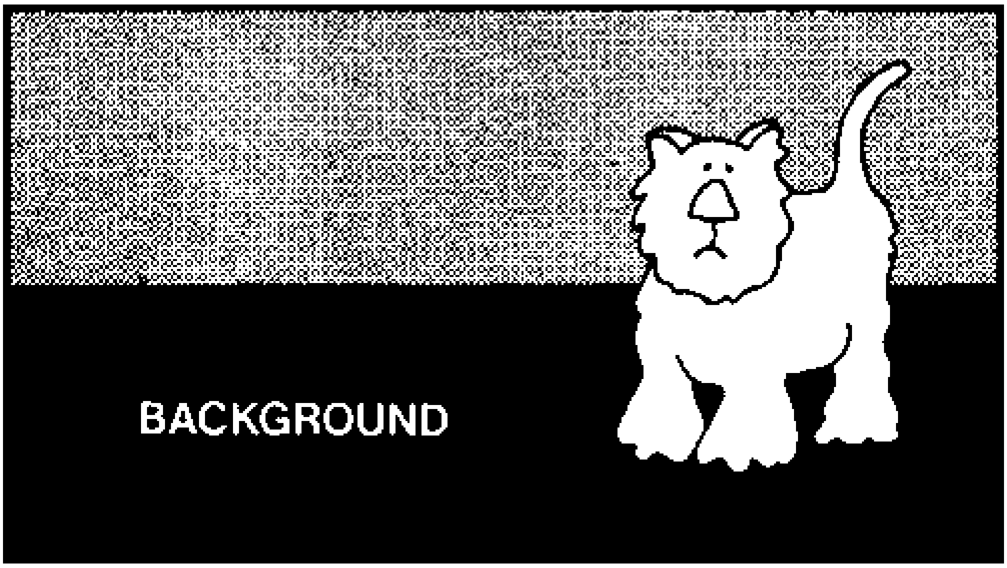

You can **group** items together to show proximity, similarity, continuity, closure, or common movement.

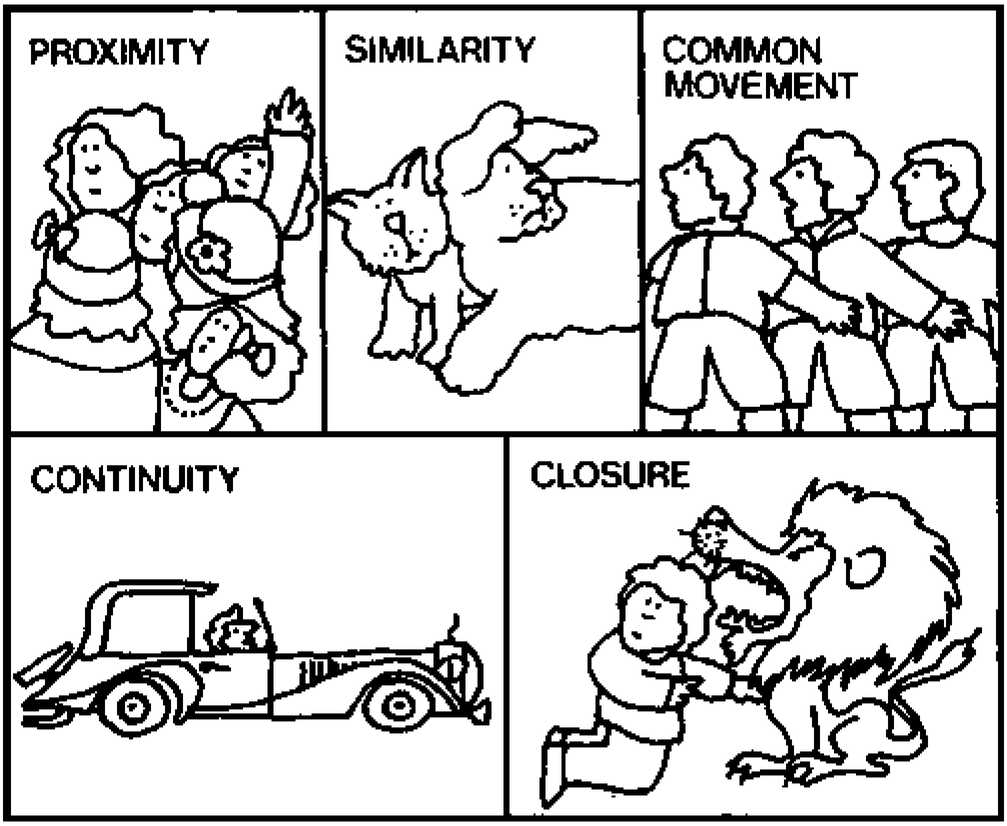

You can also use **separating techniques** to show visual elements as separate parts. To separate items you can contrast their size and shape. You can change their depth, figure-ground, or overlap them.

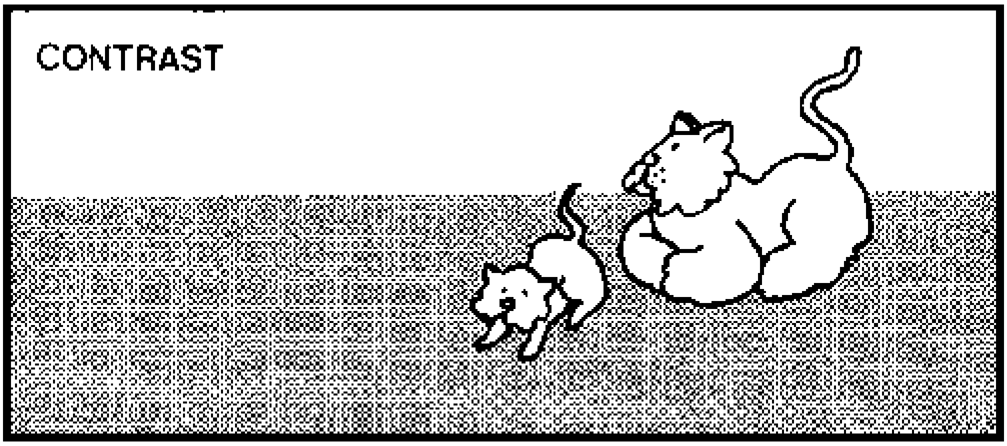

Integrating techniques combine several individual elements into a single concept such as a landscape or complete picture.

- Warm colors, such as red, yellow, and orange, emphasize subjects.
- Dark colors that are next to each other are difficult to see.
- Dark and light colors next to each other are easy to see.
- White letters on a dark background are very easy to see.

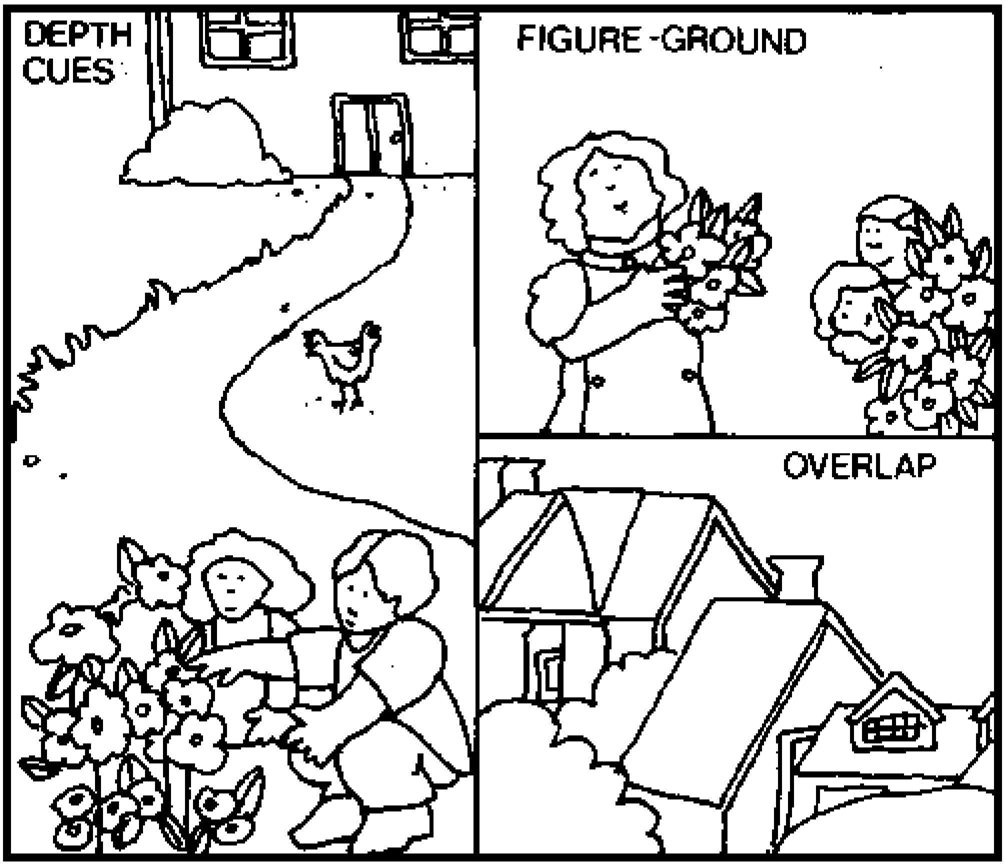

You can easily **change black and white negatives to color.** Add a drop of vinegar to food coloring and swab it on the entire negative with a piece of cotton. By using a tiny brush and a magnifying glass, you can also paint parts of the negative with different colors.

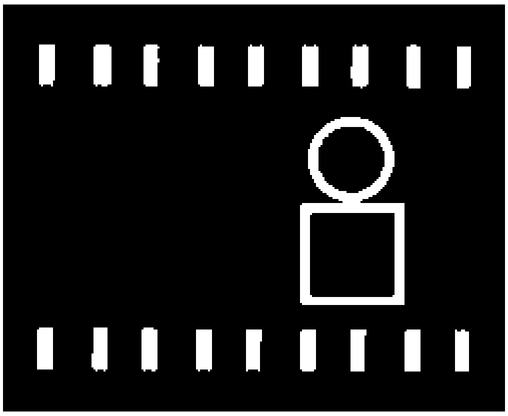

You can also buy special gels and dyes for this process, called Webster photocolors.

- Harmony - An effective slide has all the visual elements of lettering, color, material, texture, and style blended together to show a concept.

- Color - Color is an important component in graphic composition. Colors affect size, shape, contrast, attitudes, and texture of visuals and give nonverbal cues in learning (See Chapter 1, The Communication Process). Colors are also useful diagnostic tools of science.

Pay attention to these *color tips:*

a. Use only two or three colors in a visual.
b. Cool colors, green, blue, and gray, recede and are best for backgrounds.
c. These *color systems* make pleasing combinations:

Self-tone - variations of one color: for example, light, medium, and dark blue

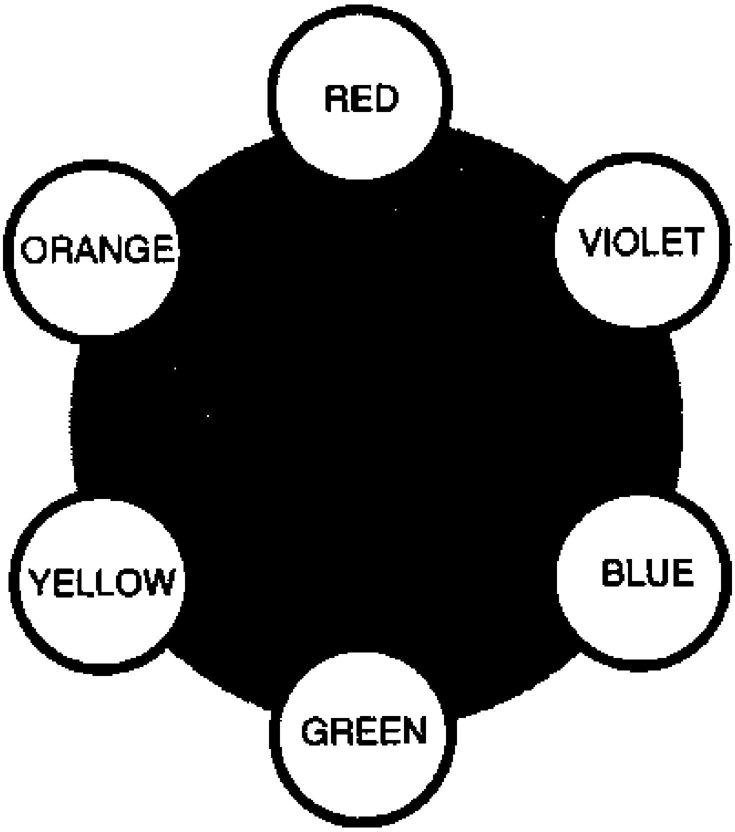

THE COLOR WHEEL

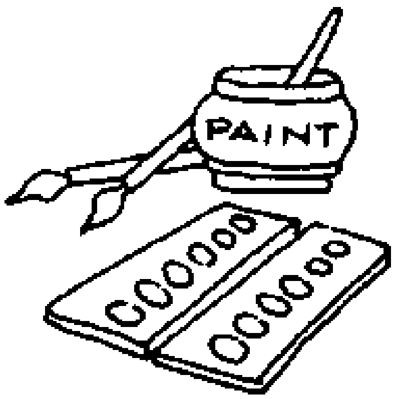

Complementary - colors opposite each other on the color wheel.

Triad - 3 colors equidistant from each other on the color wheel: for example, red, yellow, and blue.

There is a relationship between *color and legibility.* Some color combinations make messages • easier to read than others. These combinations enhance legibility:

Letters	Background
brown	
green	
blue	white
black	
black	yellow
red	
yellow	black
white	red
white	green

These are only general guidelines. Create your own combinations.

3. ***How to make camera-ready copy:***

• Typewriter copy - You can use a typewriter as a speedy method of making word slides. However, a slide of a standard size paper will *not* work. It will make your slide too crowded and busy.

Here's how to make a typing template for slides. Cut a horizontally rectangular window in the middle of a piece of paper. The dimensions are given below. Draw a solid line along its perimeter. Lay this over your typing paper and type your copy within the window.

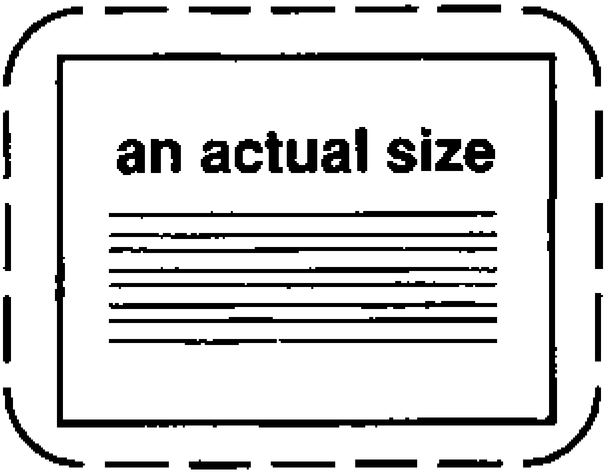

All copy should fit within the inner *solid line.*

The camera viewfindef should just include the *dotted line.*

• Standardizing copy - Most 35 mm slides have a height-to-width ratio of 2:3 in a horizontal format.

Therefore, try to **standardize** the size of all your artwork to make the photocopy process easier.

Here are recommended dimensions:

Area

- 250 × 300 mm is an outer area used for handling, production notes, etc.

- 178 × 250 mm is a good or safe area for the photograph. It should include the background.

- 150 × 225 mm is the information area.

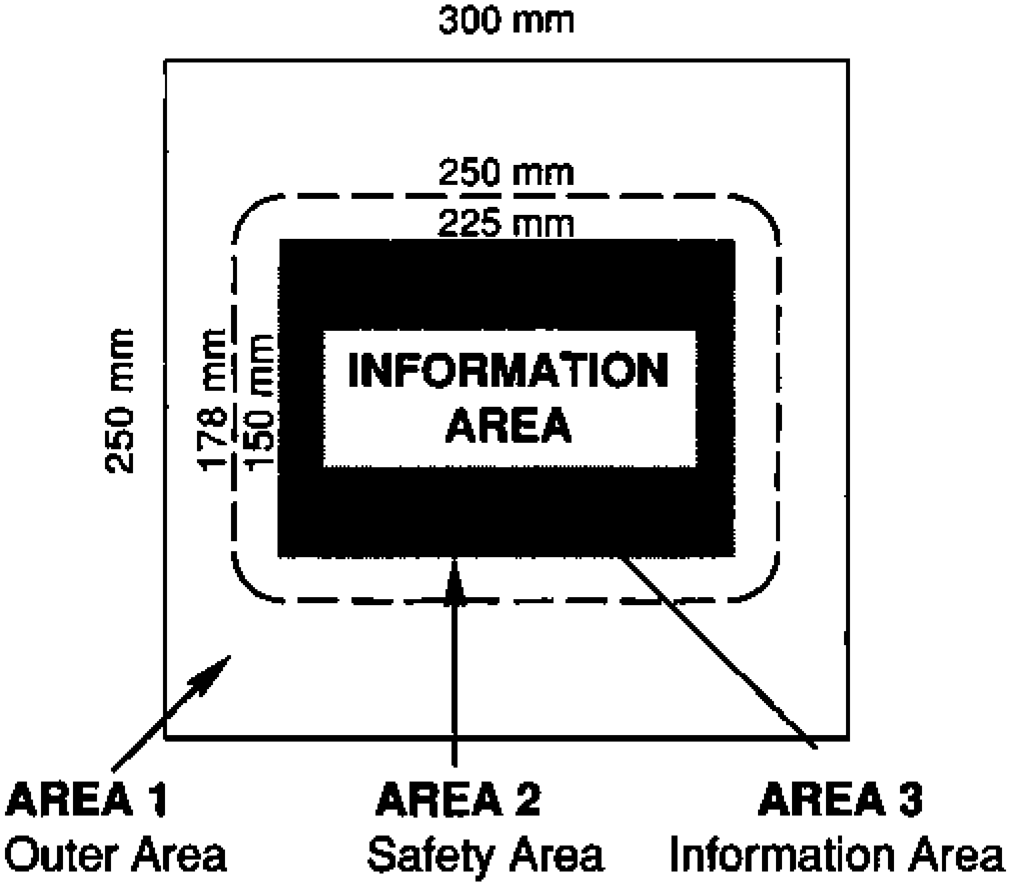

The Rule of 7: Length of longest line × 7 = viewing distance

The **Rule of Seven** is one way to judge if written material will be readable. The steps are

a. Measure the length of the longest dimension of the finished art.

b. Multiply the length by 7.

Example: The longest title is 6 in long.
Multiply that number by 7.
Thus: 7 × 6 = 42 or 3 ft 6 in.

c. Place the graphic that distance away and if you can read it clearly, it will be readable on the screen.

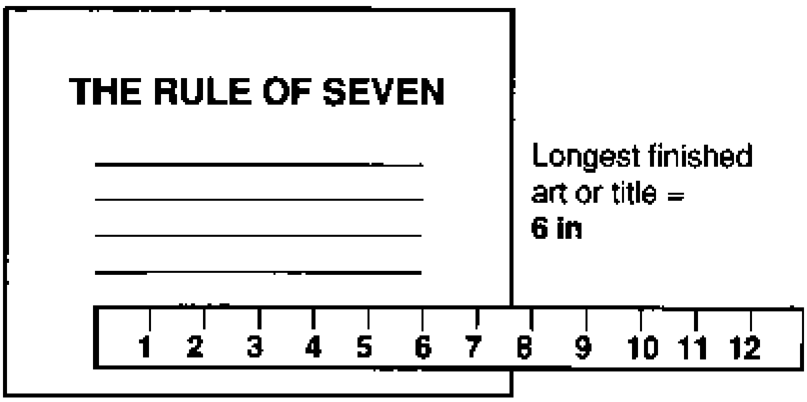

Longest finished art or title = **6 in**

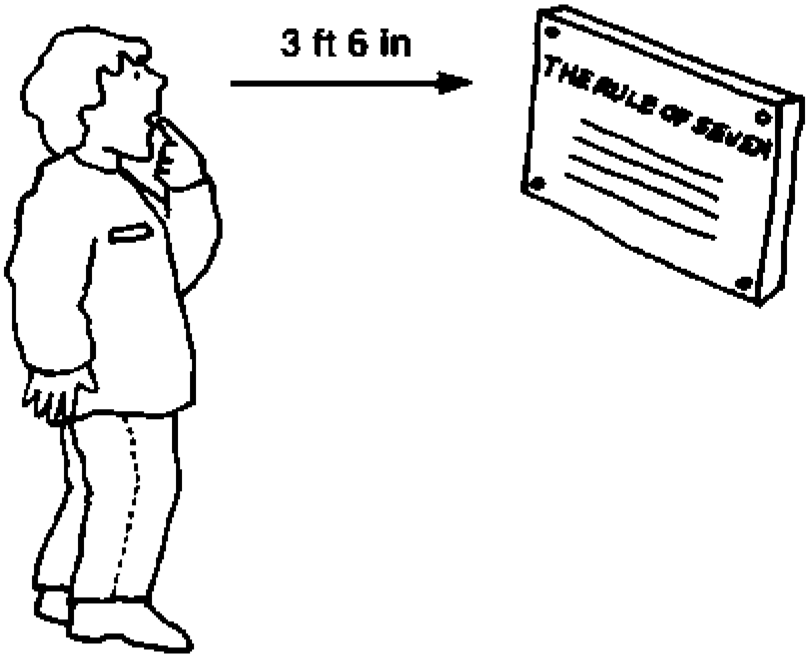

Photographs

Photographs are an effective method of communication. Although photography is a professional discipline, anyone can take pictures, especially with the new automatic cameras.

With a little practice and experimentation, you will be able to take suitable photographs for your A/I program.

Simple Guidelines

1. ***Detail.*** Photographs should contain the items necessary to communicate your subject matter. They should include sufficient **detail** so that students can see the points you want to make. Overall surroundings and panoramas are often distracting. Sometimes you need both an overall *view and* a close-up to communicate effectively. For example:

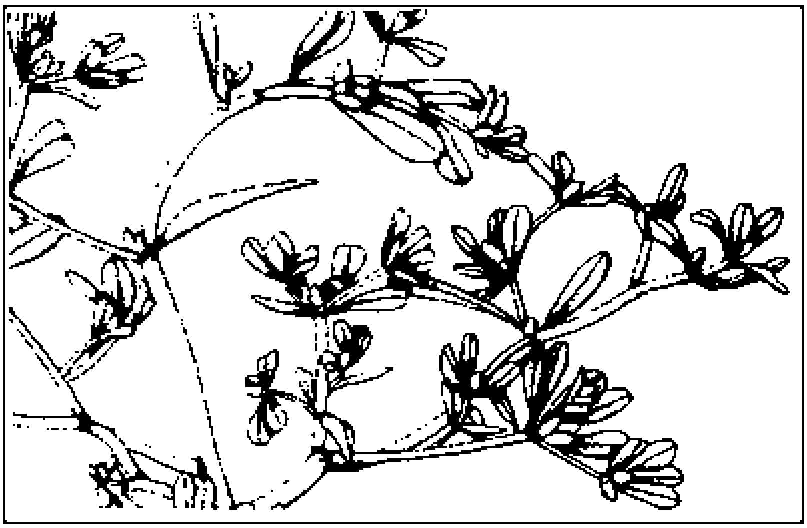

LONG SHOT

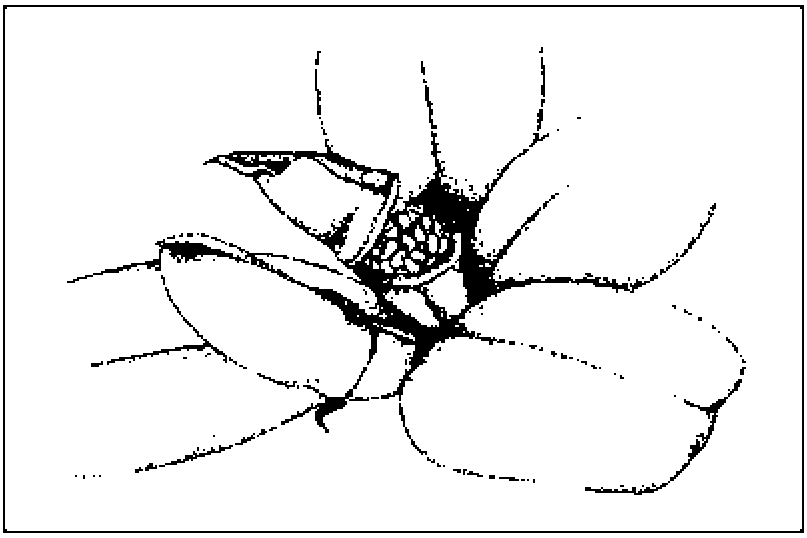

CLOSE-UP

A rule:

Film is cheap. When in doubt, take another picture.

The investment of time and travel costs more than the film, and you may have only one opportunity.

2. ***Composition***. Use good composition in photographs. The same rules of balance, emphasis, contrast, and harmony used for graphics also apply to photographs.

3. ***Color.*** The natural setting usually commands the color composition of photographs. Unless you are looking for a special effect, use color film. It may cost a little more, but it lends another dimension to visual communication. Humans evolved with colored vision for a reason - color communicates.

Use your creativity in taking photographs. When looking through the viewfinder, go forward, back, up, and down with the camera as you compose your pictures. Pretend that you are the grand artist designing a picture to make the greatest possible impact on your audience - your students!

Combination slides

Remember that words on slides reinforce the abstract verbal concept with a concrete visual image. You can accomplish this by using titles to introduce the visual and labels to identify its different parts. You'll want to use these verbal codes on both graphics and photographs whenever possible.

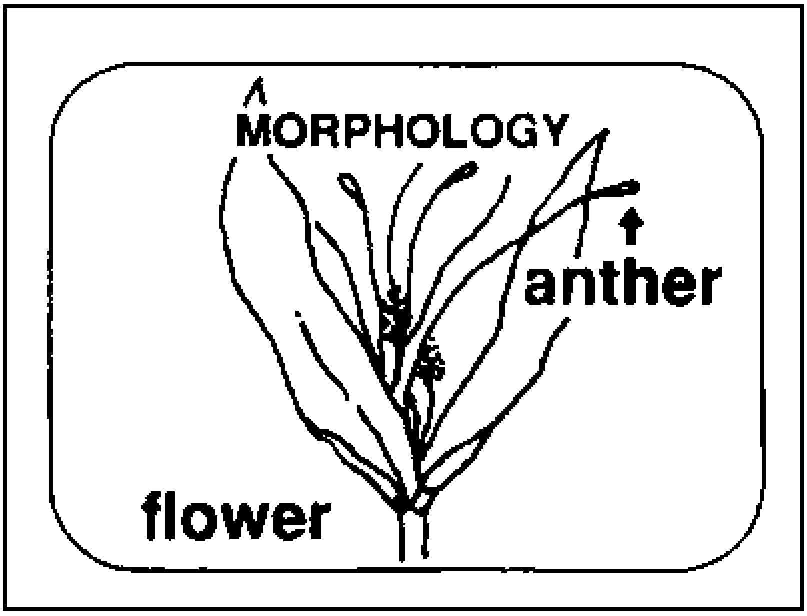

The principles in the section on titles and word slides also apply to words on graphic and photograph slides.

Here are a few more guidelines:

• Make labels concise and simple, 1-2 words.

• Too many labels are confusing. Use only 5. Use more slides if more than 5 labels are necessary.

• Often, main visuals will require supporting words. You can highlight the most important element with color. This especially applies to progressive disclosure slides.

• When you use lines or arrows to point from words to pictures, they should be precise.

Photographic equipment and slide copying

The camera

These are the best camera specifications:

size - standard 35 mm single lens reflex

lens - 50-55 mm micro (1:1)
lens tubes with 2 extension rings

flash - rechargeable battery
extension cable

features - built-in exposure
focal plane shutter

Accessories

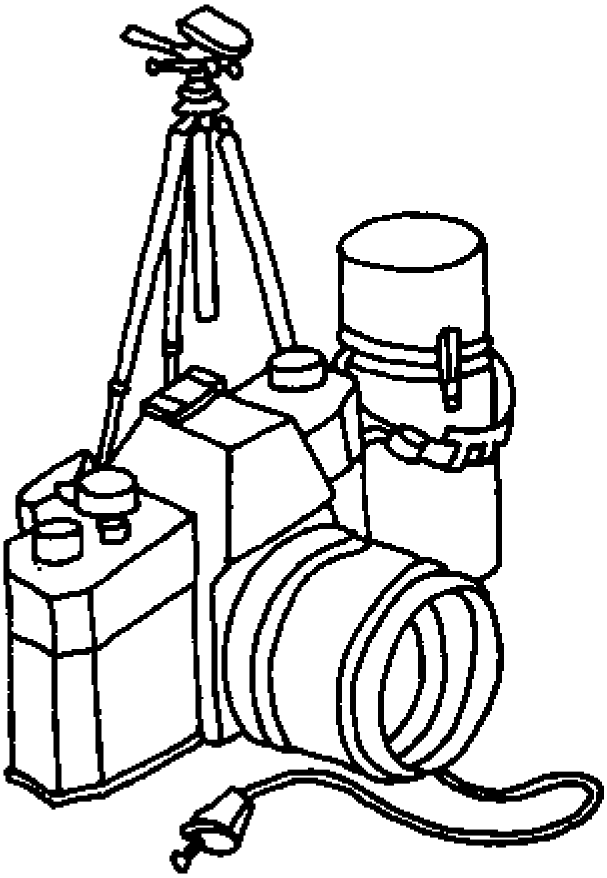

The following are necessary accessories for photography:

tripod
shutter cable release

Film

Two kinds of film may be used for slides:

color - Ektagraphic (ASA or ISO) 64 and 100
black and white - positive 25

negative 25
high contrast

Copystand

A copystand is helpful in producing slides and to

• photograph camera-ready graphics
• affix titles and labels to photographs, and
• copy photographic prints and slides.

Ready-made copystands are available from manufacturers. However, with a little effort and ingenuity, you can construct your own practical version (See Appendix 1).

To conclude, this was a very long detailed chapter which will take some time and study to completely understand so that you can remember the information well enough to use it.

A participation exercise can help. Chapter 10 will show you how to write feedback exercises, and we already gave you objectives at the start of the chapter. After this long chapter, the author is very tired, so it will help us both if you practice using this information by writing your own feedback exercise. You will be surprised at how much you have learned!

However, hurry because in the next chapter we do the tape and then try out the program!

References and information of interest

American Association of Agricultural College Editors (1976) Communications handbook. 3d ed. Interstate Printers & Pub., Danville, Illinois.

Dwyer F (1972) A guide for improving visualized instruction. Learning Services, Pennsylvania State University, State College, Pennsylvania.

Eastman Kodak Company (1973) Legibility - artwork to screen. Rochester, New York.

Eastman Kodak Company (1972) Effective lecture slides. Pamphlet S-22. Rochester, New York.

Ertel R E (1979) The multi-image production. WTI Corporation, California.

Friesen P A (1973) Designing instruction. Miller Publication, Sta. Monica, California.

Frio A S (1977) Preparation and use of audiovisual communication media and materials. Department of Development Communication, University of the Philippines at Los Baños, Laguna, Philippines.

Grabow J, Wesley F (1982) Resources for teaching. NACTA J. 26(l):27-28.

Kemp H E (1968) Planning and producing audiovisual materials. Chandler Publishing Co., Scranton, Pennsylvania.

Minor E (1978) Handbook for preparing visual media. 2d ed. McGraw-Hill, Inc., New York.

Minor E, Frye H (1977) Techniques for producing visual instructional media. McGraw-Hill, Inc., New York.

Salmons N (1959) Planning and producing visual aids. National Photographer 10 (8 & 9) and Kodak (Pamphlet S-13). Rochester, New York.

Xuan Vo-Tong (1976) Visual aids, International Rice Research Institute workshop on field experiments (VII-4). International Rice Research Institute, P.O. Box 933, Manila, Philippines.

CHAPTER 9. The Tape

Prospectus

This chapter will explain how to tape your program.

Rationale

Oral communication humanizes the autotutorial process, allowing students to become emotionally involved with the voice on the tape.

The human voice has musical qualities and tones and imparts an additional dimension to the message that is not available if it is written.

Objectives

At the end of this chapter, you will be able to

• Recall 5 components of a tape.

learning
message
pace
voice quality
music

• Describe the 11 sequential steps in taping a narrative.

produce copy
load slides
determine pace and time
record notes
link narrative with slide titles and labels
locate recording space
practice script
record
repeat and redo sections
edit mistakes
produce a master copy

If you intend to produce a print/ picture program on paper only, skip this chapter as it discusses how to produce a slide/tape or picture/tape module.

• List 6 considerations of creating a script or copy that assist in recording efforts.

standard paper
type in capitals
use larger type
double space narrative
triple space between frames
number frame narrative to coincide with visual frames

• Define and associate the following terms:

cold cuts
gingerbread
presence tape
dead spot
master

• Discuss 3 methods of producing gingerbread.

• Compare 3 variations of advance signals.

recorder inaudible
recorder audible
narrator audible

Components of a quality tape

As with graphics and photography, broadcasting or communicating with the human voice is also a profession.

Voice, tone, pitch, harmonics, pace, inflection, and volume all work together. They create an atmosphere that affects attitudes and enhances the effectiveness of the message.

For these reasons, it's best to get a professional broadcaster to record your tapes. However, time, money, availability, and other resources often make professional assistance impossible.

Message
Pace **=** **Quality**
Voice **Tape**
Music

But don't despair! You can produce your own tapes. In fact, you can even be your own voice. Before you begin, consider these components of a quality learning tape:

• The message should be appropriate to the audience (See script creation, Chapter 7).

• Pace/cues to advance the slides should be at a consistent speed but slow enough for students to understand.

• Voice quality should modulate with the script and be enthusiastic.

• Music or gingerbread, as it is called in the trade, adds variety.

Your program will also have more variety if one voice introduces and summarizes the program, and a different voice explains the content of the module.

Recording the narration

Let’s go through the recording process step by step.

Step 1. Create a script.

- Type your script from the storyboard frames onto standard paper.
- Type the script in capitals.
- Use large type if possible.
- Double space as you type.
- Leave 3 or 4 spaces between texts of script for different frames.
- Number each section of script to correspond with the accompanying slide.

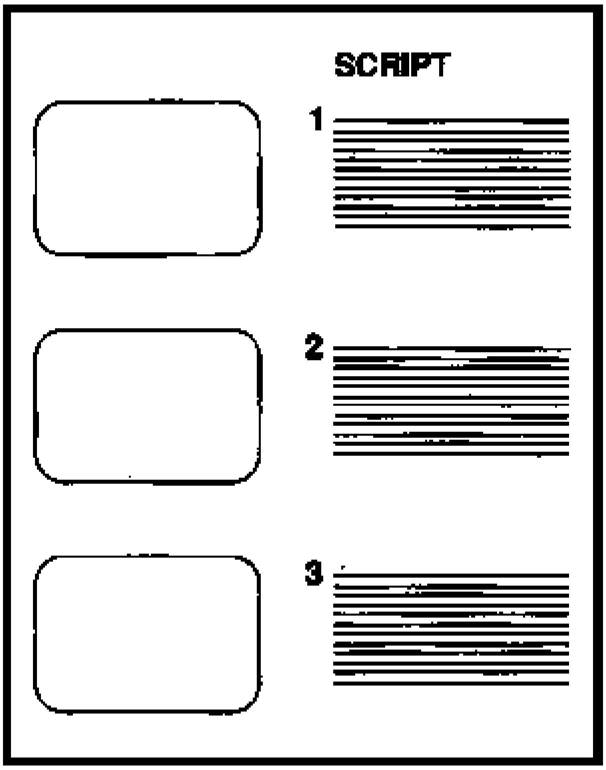

An example of a script using these guidelines would look like this:

9 ALLOW ME TO EXPLAIN. EVERY 7 TO 10 YEARS, INFORMATION DOUBLES. OF COURSE, MUCH OF THIS INFORMATION IS SCIENTIFIC.

10 WHAT WE HAVE IS A LITERAL TECHNOLOGY GENERATOR THAT IS PRODUCING ALL TYPES OF TECHNOLOGY AT AN UNPRECEDENTED PACE.

11 THE PROBLEM WE MUST SOLVE IS NOT ONLY HOW TO TRANSFER THAT TECHNOLOGY SO THAT IT IS AVAILABLE TO ALL NATIONS BUT ALSO HOW TO ADAPT THAT TECHNOLOGY TO LOCAL CONDITIONS.

Step 2. Load your slides into a carousel.

Step 3. Read the narrative aloud as you look at your slides and time the length of the presentation.

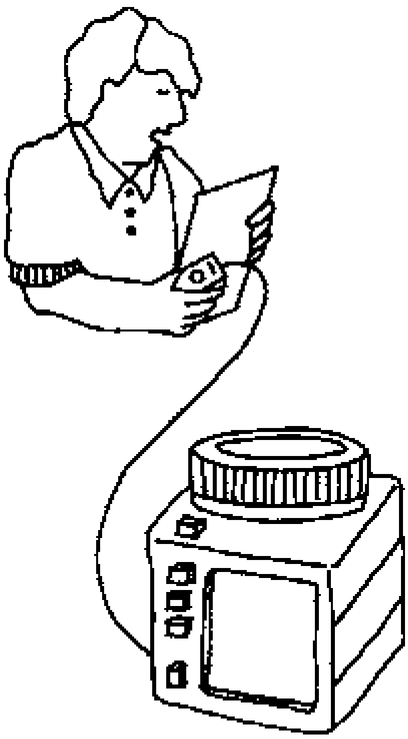

Remember you have seen the entire program many times, but it's new to the student. Go slow and leave ample time for slide changes. If it is done at the right tempo, it will seem too slow to you. Initially, you'll tend to speak too fast because of the excitement of talking into the recorder. Here's an excellent way to achieve the correct pace. Use student volunteers. Allow them to look at the slides with you as you read the script.

Step 4. Once you have determined the correct pacing, read the copy through again.

Make any notes or cues in the margin of your script that will help you record.

Step 5. Check your script against the slide titles to be sure they are consistent.

It is distracting to students to hear one thing and see something different on the slides. Be sure the narrative fits the slide.

Step 6. Find a quiet room.

If you don't have a sound room, recording at nighttime works best. Beware of motors and buzzing light fixtures. You will need a cord extension to advance the slide and avoid the sound of the slide projector on your tape.

Step 7. This is it!... Almost... Read your copy through aloud one more time as a final practice.

Read with inflection, a pleasing tone, and enthusiasm, but do not ad lib. This is a live practice!

Practice placing your used copy gently on the floor. This method helps prevent the microphone from picking up paper rustle.

Step 8. Do it once more but this time, record.

Step 9. If you're recording on a reel-to-reel recorder, you can splice out mistakes - if you know how.

If you're recording on a cassette, you may have to record several times to get a satisfactory copy. The quality is up to you! Your finished voice recording is called a cold cut.

Step 10. If you're using a reel-to-reel recorder and plan to have someone splice or edit the tape later, allow several minutes of blank tape to run.

This is called "presence" tape. It sounds more natural when spliced in pauses than if you use unrecorded tape which will have a discernible "dead spot."

Step 11. After recording or cutting a successful tape, make a copy and use it for the next step. Save the master or cold cut.

Step 12. Gingerbread.

Radio people call music or other special effects gingerbread. Gingerbreading a cold cut is not essential to presenting the message, but it does add another dimension. Here are 3 ways to do it.

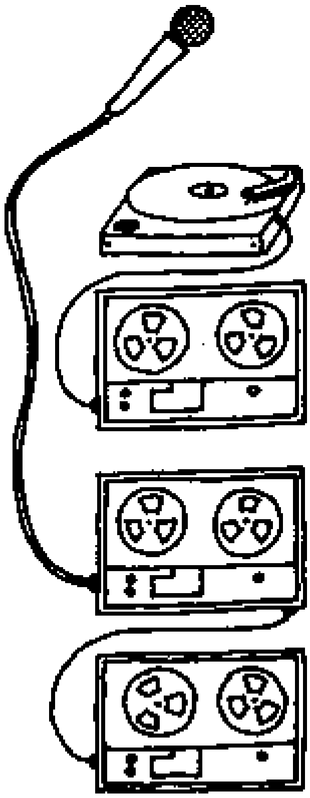

Methods of Taping

Method 1 - using 2 recorders

1. Read and time your presentation.
2. Select music to go with the narration.
3. Record the music, or use a record of the music if available.
4. Play the music as background as you record your narration.

Method 2 - using 3 recorders

1. Time the already recorded narration.
2. Select music.
3. Play the music and the narration simultaneously while recording on the third recorder.

Method 3 - using l recorder

Of course, if you have access to a sound-on-sound recorder which has the ability to put one recording on top of another, you can dub or record music right over the voice.

No matter which method you use, be sure to make a copy of your original or master. Save the master as a back-up in case the copy gets lost or destroyed.

Most students feel that you should use music or sound effects sparingly. They work best as cues to introduce and end the program or to introduce and end breaks in the middle of the program.

Students also say that music is distracting when used as a background during learning. However, recent research has shown advantages of inputting particular types of information with particular types of music. This method of learning via music is called superlearning (See references at the end of this chapter).

Editing the tape

If you are using a reel-to-reel recorder, you can edit the tape by removing or adding sections to it. You need an inexpensive splicing machine to do this. The procedure is very simple, and the instruction comes with the machine.

Editing eliminates bad “takes” or mistakes in the program narration and is helpful in achieving precise timing between slides. We do not recommend editing cassette tapes.

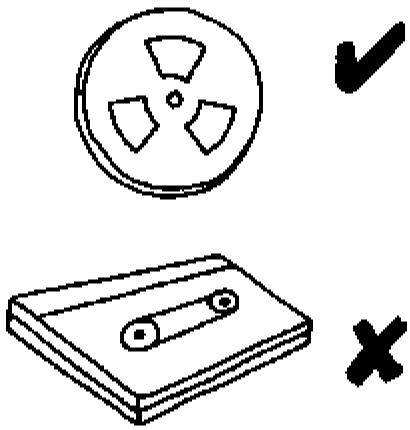

Editing and using gingerbread and multiple recordings are fine if you have the available materials. However, **you can make good, practical instructional tapes by simply recording the narration on an inexpensive cassette recorder.**

Cues

Of course, students need some cues on when to advance the slide projector to synchronize the slides and tape. Some recorders have a device that makes either a sound or a silent advance signal on the tape. The signal is part of the other track of the tape so that you cannot record on side two.

Inaudible advance

If you use a silent or inaudible advance, use a cable to attach the recorder to the slide projector. The recorder will then automatically advance the slide projector when it receives the inaudible cues on the tape.

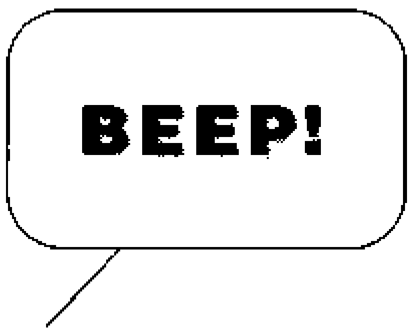

Audible advance

If the tape has an audible advance cue, the recorder and the projector run independently. At the sound of the cue, the student manually advances the projector.

Narrator audible

If you do not have access to a recorder with advance signals, you can make your own advance cues. Use a light bell, or tap on a water glass (different water levels make different sounds), or some device that makes a pleasing tone. When you are recording the script, simply sound the tone between each frame. The sound will signal to the student to manually advance the projector.

There! We finished Chapter 9 on making tapes. Our feedback exercise will be brief because most of the material consists of your psychomotor skills. Therefore, your feedback will really be in the form of your finished tape.

> ***A reminder:***
>
> **These are simple guidelines for taping your program. We purposely omitted intricate technical details and devices. You can "cut" or make effective instructional tapes with your voice, cue signals, and if you want, use background music that fits your culture and student population. You can do this all at one time on a single, inexpensive tape recorder.**
>
> **However, it you do have the resources, professional quality tapes are desirable.**

Feedback exercise

• You should always use a professional broadcaster to make tapes.

_____YES _____NO

• Music and pace are two important components of a quality tape. What is another primary part?

• Fill in the blanks to complete the 6 requirements in creating copy.

Script copy should use

1. standard copy
2. ________________________________
3. larger type for reading ease
4. ________________________________
5. ________________________________
6. matching script with visual

• The task analysis of tape production in sequence is

1. Produce copy/script
2. Load slides
3. ________________________________
4. Record notes for speaking
5. ________________________________
6. ________________________________
7. Practice
8. ________________________________
9. ________________________________
10. Edit mistakes
11. Master copy
12. Gingerbread

• Match the following terms:

A. recorded narration	___ good recording
B. original copy	___ presence tape
C. tape recorded without sound	___ gingerbread
D. musical filler for narration and pauses	___ cold cut
E. pause with different sound than recorded tape	___ cue
F. advance signal	___ master
G. take	___ dead spot

• Explain the process of putting narration with music using two recorders.

• Why don't we recommend putting background music with the narration?

• Discuss the types of cues.

Answers to feedback exercise

• No

• voice/message

• all capital type
double space narrative
triple space between frames narration

• 3 pace
5 link narrative and visuals
6 locate quiet space to record
8 record
9 re-record segments with mistakes

• G, C, D, A, B, F, E

• Play music as you record narration.

• It distracts.

• Two types:

- audible advance
- inaudible advance

References and information of interest

American Association of Agricultural College Editors (1976) Communications handbook. 3rd ed. Interstate Printers & Publication, Danville, Illinois.

Ertel R E (1979) The multi-image production. WTI Corporation, California.

Ostrander S, Ostrander N, Schroeder L (1979) Superlearning. Dell Publishing Co., Inc., New York, New York.

CHAPTER 10. How to Use Feedback and Evaluation

Prospectus

In this chapter, we will learn how to construct feedback and self-evaluation exercises and find out why they are important in A/I.

Rationale

Since self-evaluation exercises are a major part of the A/I concept it is important to know how to fit it in with the other parts. Self-evaluation exercises are important because they provide feedback to the learner on the learning process.

Objectives

At the end of this chapter, you will be able to

• List and discuss 6 methods of repeating information in an A/I module.

objectives
advanced organizers
examples
visuals
chunking
feedback exercises

• List 7 types of drill and practice items that can be used in feedback exercises.

multiple choice
short answer
completion
matching
draw and label
short essay
true or false

• Discuss the relationship between objectives and feedback exercises.

objectives are a source of questions

• Compare and contrast norm referenced and criterion/mastery-referenced instruction.

	Norm	**Mastery**
distribution	Central limit (bell distribution)	No curve (mastery point)
material focus	Broad subject matter focus	Broad and specific matter focus
student focus	Group	Individual
reward	Competitive award system: (ABCDE)	Individual award system pass/ fail/extra materials for group competition

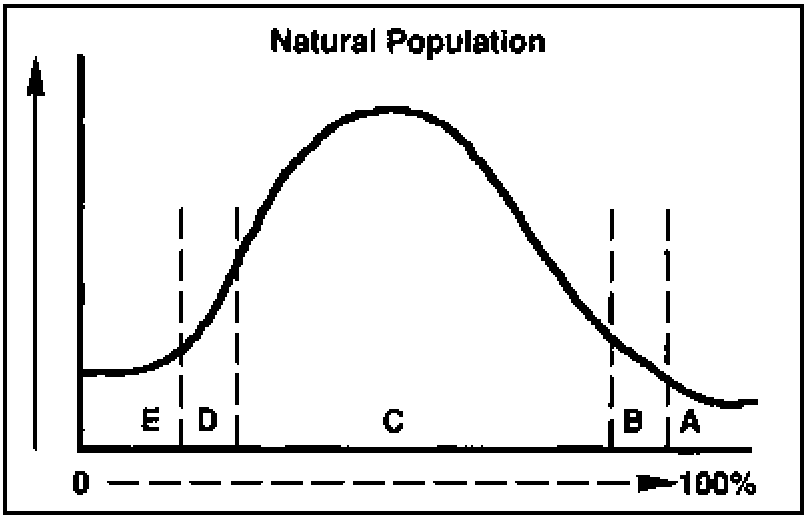

NORM REFERENCED

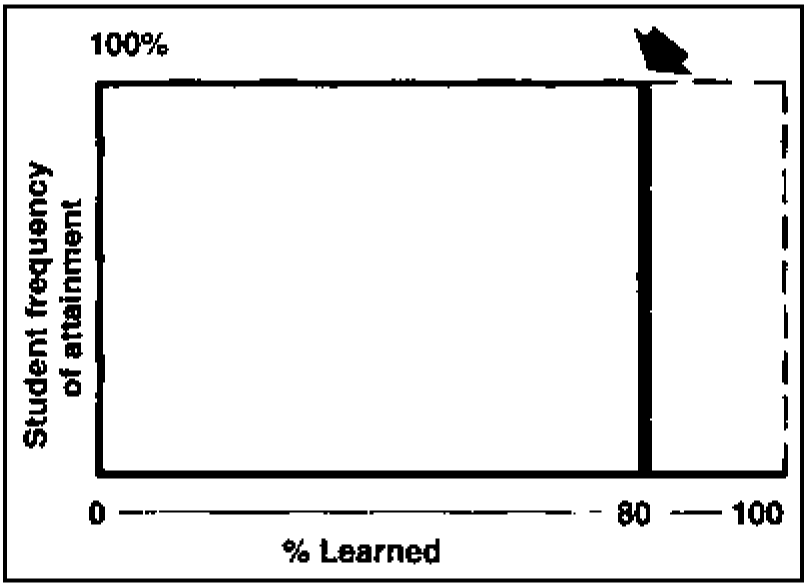

MASTERY REFERENCED

Repetition and A/I

Repetition is a major learning device. Finding methods to repeat information without boring the learner is one of the major challenges of creating self-learning programs.

- The use of **objectives** is one major method of repetition.

- **Advanced organizers** or titles focus the information to be learned. Then you can restate the title in the content script (See Chapter 2).

- **Examples** are another form of repetition.

- Written descriptions followed by words or portions of the script inserted in **visuals** such as tables, pictures, or graphs are other methods of varying repetition.

- **Chunking** information under objectives is still another method.

- And finally, **participatory** or self-evaluation exercises or questions are most important.

Constructing feedback exercises

Once you have written your objectives, feedback exercises are easy to construct. Simply restate the objectives in the form of questions or statements using the standard testing methods of

- multiple choice
- short answer
- completion
- matching
- draw and label
- short essay
- true or false

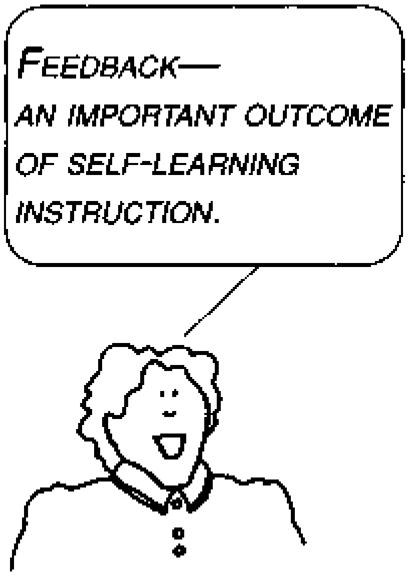

It is not necessary to include all the information associated with an objective in the question. Perhaps a sample will be enough to assume that the student has mastered the skill and can perform the objective.

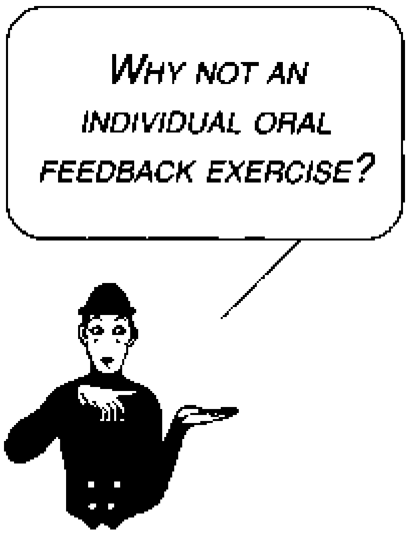

For example:

Objective = List the 8 parts that form the definition of the A/I program.

Feedback exercise = The first part of the A/I program is the objective. Others are a change in the instructor's role, self-pacing, linkage of objectives to evaluation, and print/tape media.

Can you name 4 additional parts?

1. ________________________________
2. ________________________________
3. ________________________________
4. ________________________________

Evaluation and writing valid tests is a discipline in itself, one too large for the scope of this guide. However, you *can* write simple questions that will enable students to give you feedback on what they have learned.

The important rule to follow is: **Link your questions to your objectives; use your chunks.**

We assume you have had practice in writing these kinds of test questions. We cannot address question construction in this book. If you need help, refer to texts on the subject because objectives and feedback exercises are important parts of an A/I module. It is essential that you be able to write feedback questions.

Referencing instruction

Now let's look at another issue involved in autotutorial methodology and evaluation: referencing instruction.

There is a philosophical controversy in education - one concerning **norm-referenced vs. criterion/mastery** or **referenced instruction.** This controversy surrounds A/I, so perhaps you should be familiar with it should you adopt this type of methodology. However, if you're not interested, you can opt out of this discussion by turning to page 199.

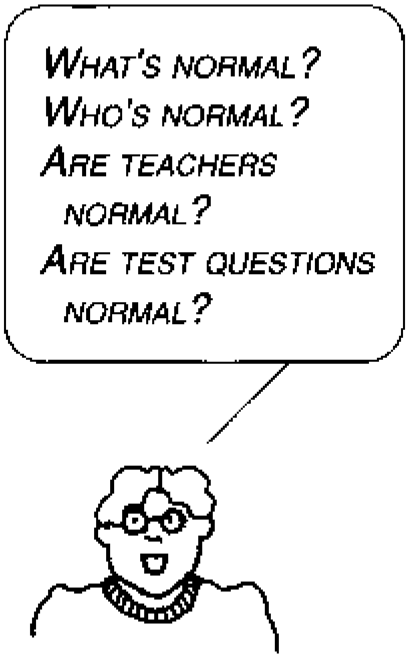

Norm-referenced instruction

Norm-referenced instruction involves the statistical aspects of the central limit theorem and the problem of grade distribution. In simple terms, the **central limit theorem** says that if you measure the frequency of an item of any natural or biological population (including students' learning abilities), the composite values will fall within a bell-shaped distribution curve.

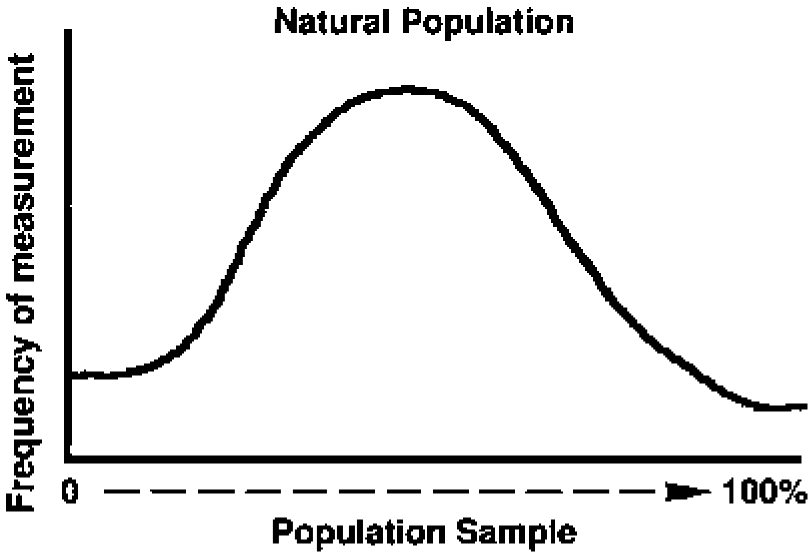

For example, if we randomly sample animal horn length, plant height, or seed weight of a natural population, the measurements would fall within a bell-shaped distribution.

When we apply this principle to the learning process, students' grades should also fall in a bell-shaped distribution.

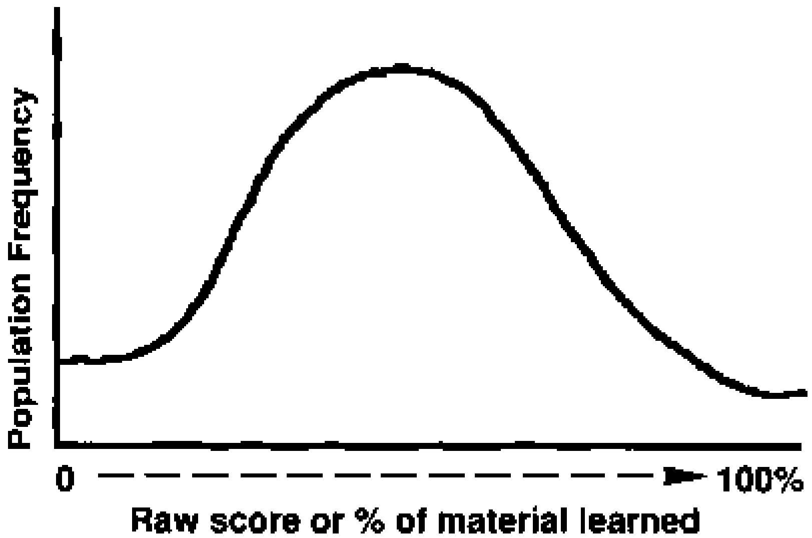

Then grades in the upper tail of the curve are As and those in the other end are *Fs* and in between grades are ranked accordingly.

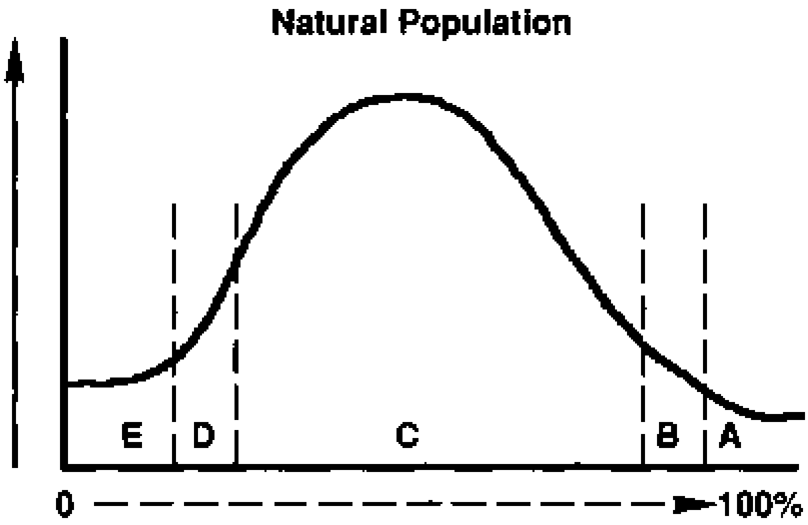

Because of competition, reward systems, honors, and transcripts, teachers have a difficult responsibility in determining and documenting students' learning success. The statistical procedures used in norm-referenced instruction are a tool to measure success. It is still by far the major methodology used in most instructional situations today.

Scenario 1: The adversary. To obtain a bell-shaped grade distribution, the instructor becomes an adversary to the learners. A few tactics employed in the adversary game are as follows:

- The lecturer lectures rapidly, covering many topics.
- The material is unorganized and without emphasis so students have difficulty taking notes.
- The instructor does not use visuals, handouts, overhead projections, or even write on the chalkboard.
- Outside readings are excessive and impossible to finish in the allotted time.
- The instructor does not ask questions, encourage discussion, or give practice exercises.

Then comes the final exam. Questions are ultra specific, tricky and ambiguous. Result! A nice bell-shaped distribution of the exam scores.

We've purposely overstated these tactics. Yet unfortunately, many of them are in use, and they are contrary to all recommendations of learning research.

Mastery-referenced instruction

The ultimate goal of a master teacher is that 100% of the students learn 100% of the material. This is a human impossibility, but nevertheless, a goal. There are many elements that contribute to this goal, but the 8 components of A/I are some beneficial methods that have been researched.

Scenario 2: The facilitator. The facilitator has goals other than the bell-shaped distribution of grades. His/her primary function is to facilitate the learning process.

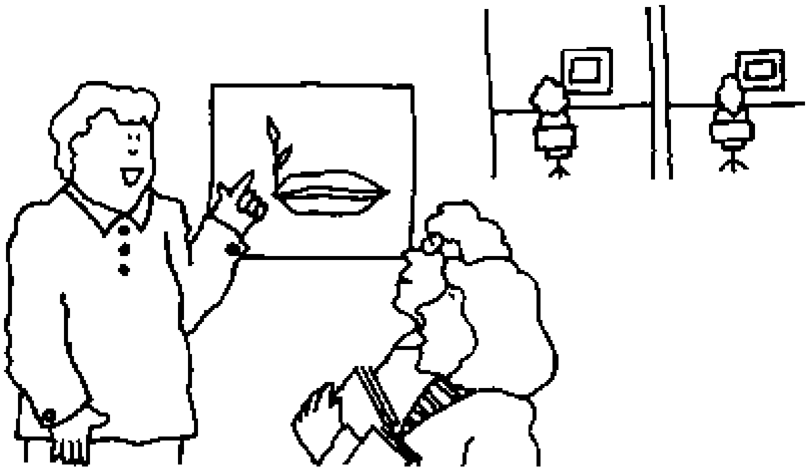

In mastery learning, the instructor facilitates by designing goals that both the student and the teacher clearly understand. Students must successfully learn the subject material before they are able to move on to the next topic.

The subject mastery level is set wherever you desire. Many researchers recommend that 97% of the material should be learned before the student moves to the next block of material.

This is a good idea for airplane pilots and brain surgeons! Perhaps if you're not involved in life and death situations, you could set a lower standard.

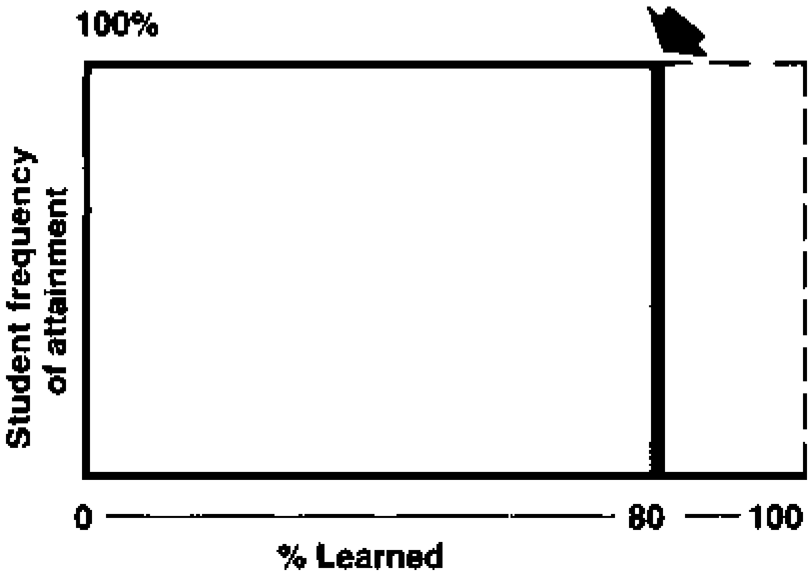

Many educators argue for 100% mastery level of content. They contend that if 80% is passing, then identify the 20% that's not so important and throw it out. Prioritize material!

Yes

1. need to know

No

2. nice to know
3. less nice to know
4. barely relevant
5. might be used someday

Criterion or mastery learning means that with time, potentially all of the students pass. Some faster or easier than others, but they all pass. If everyone passes, how can you reward excellence? Simple!

Because students vary in the amount of time they need, motivation, interest, and maturity, some will always excel beyond the essential information. Then you establish a system that allows those fast learners a new exploratory track of independent exercises, reports, readings, and projects.

But all of the students must master your core goals or they fail! It is basically a pass/fail system with an added track of incentives for the learners.

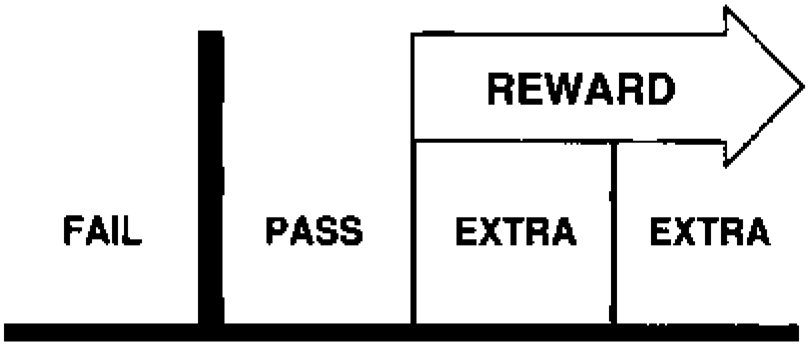

But if you use criterion referencing, be prepared to defend your philosophy and system to your norm-referenced colleagues. Norm referencing has been around a long time, and it's the system with which they were evaluated.

Feedback exercise

Speaking of evaluation, it's time to give you the opportunity to evaluate your learning.

• Four methods of including repetition in a module are

____
____
____
____

• When writing feedback exercises, they should be linked with the contracts or objectives.

_____Yes _____No

• Check the terms that best define the focus of mastery instruction.

_____ bell curve
_____ specific focus
_____ group
_____ pass/fail
_____ reward system

• List 4 of the 7 reasons for using objectives.

____
____
____
____

Answers to feedback exercise

• Objectives
Advanced organizers
Examples
Visuals
Chunking
Feedback exercises

• Yes

• Specific focus
Pass/fail
Reward system

• Defines behavior
Learner/instructor contract
Organizes information
Autoevaluation for learner
Maximizes concept agreement
Minimizes learning time
Correlates output and feedback channels

Now that you have acquired this information on feedback exercises, practice designing a feedback exercise for the next chapter.

References and information of interest

Braskamp L A, Branderburg D C, Kohen E, Ory JC, Mayberry P W (1983-84) Guidebook for evaluating teaching. 3-part series. NACTA J. 27(4):29-34; 28(1): 19-25; 28(2):27-32.

DeLandsheere G (1982) Empirical research in education. United Nations, Paris.

Dwyer F (1972) A guide for improving visualized instruction. Learning Service, Pennsylvania State University, State College, Pennsylvania.

Friesen P A (1973) Designing instruction. Miller Publication, Sta. Monica, California.

Kirkpatrick D L (1975) Evaluating training programs. American Society Training and Development, Madison, Wisconsin.

Renwick G W (1979) Evaluation handbook for cross cultural training and multicultural education. Intercultural Network, Inc., Illinois.

Siri C M (1984) CIP course evaluation manual. International Potato Center (CIP), Lima, Peru.

Storey A G (1970) The measurement of classroom learning. Science Research Associates, White, Chicago.

CHAPTER 11. Creating A/I Programs: Problems and Shortcuts

Prospectus

In this chapter we will discuss some problems you might have in creating a slide-tape program and show you some short cuts.

Rationale

Problems are not obstacles if you can anticipate them and devise ways to solve them.

Objectives

There are none. Just some practical hints to help you. We want to encourage anyone **who lacks abundant resources** and show you that you can still use autotutorial programs. Be sure to read **Problem 1!**

Problem 1: Hardware

The major drawback in using A/I is to get the hardware - adequate slide-tape machines to develop and carry out instruction for a large number of students.

Read this again and note that autotutorial instruction doesn't need machines.

Solution

Abandon the slide-tape format but retain the **objectives, frame format, program, and the feedback exercises.** Using only picture/print materials and the principles of modular instruction, you can eliminate the hardware.

By doing this, you enable the students to use the information outside the learning center.

Here's how you can do it. The sequential pictures still contain titles, labels, and other cues, but they are compiled into a book. The script still coordinates the verbal information with the visual so that on the page, the picture is on the left and the narration is on the right. Be sure to underline or use capital letters for vocabulary words in the script.

FRAME X

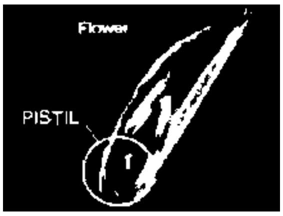

Narration X
The flower consists of a *pistil* (female organ) and

FRAME Y

Narration Y
six *stamens* (male organ)

FRAME Z

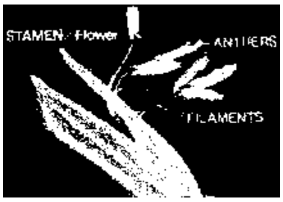

Narration Z
The stamens have two-celled *anthers* borne on slender *filaments.*

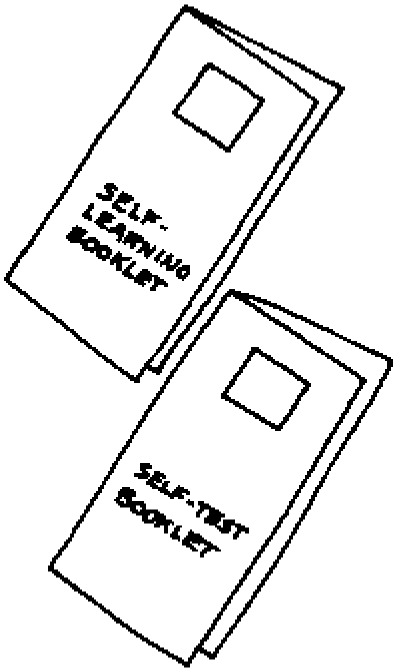

Disadvantages are that you do not have the voice and music that go with listening. Also, it is expensive to print pictures. You might compromise by using black and white instead of color.

If you can afford it, use this method of instruction in **addition** to the slide-tape format. It assists learning because learners can read the script and hear it at the same time.

Problem 2: Graphics

When trying to create A/I programs, it is sometimes difficult to find the right kinds of graphics for visuals.

Solution

Solve this problem by creating your own graphics. Usually, word slides are just a matter of sticking letters to colored paper. Here are some examples of short-cut graphic methods.

- Make a visual using colored chalk on a board, then photograph.

- Trace line drawings from a book; color them with pencils or crayons. Then paste them on colored paper backgrounds.

- Cut pictures out of popular magazines. Paste titles oh them and photograph.

- Use your best artistic ability and create your own. Often simple drawings can adequately convey concepts, even the use of stick people.

- Use your imagination. Use friends who have artistic ability.

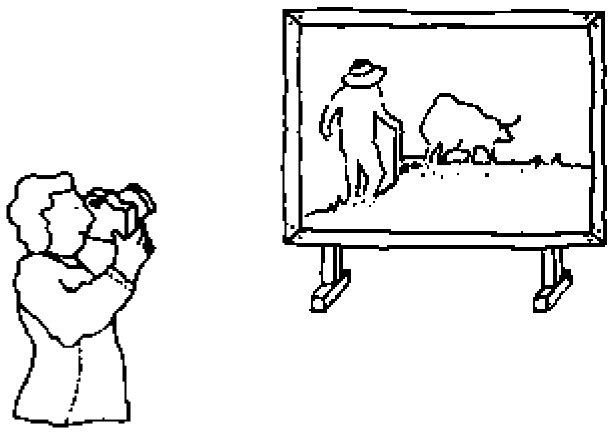

Problem 3: Time

Creating self-learning programs take time. You'll need about one hour of production (writing, storyboarding, graphics, taping, etc.) for each minute of instruction.

Solution

Two ways to speed up program creation are

- Graphics - use the graphics short cut.

- Narration - many people know their content information so well that they can lecture from memory or an outline. Try this short cut.

    1. Create slides to go with the lecture.
    2. Record the lecture while using the slides.
    3. Have a typist transcribe the lecture.
    4. Edit the transcription into a narrative.
    5. Record the narrative with cues.

Remember, use only 15 seconds per slide.

Problem 4: Tape duplication

Often, high speed and multitape duplicating facilities are not available.

Solution

Send tapes out to a duplicating service or duplicate them yourself one at a time from one recorder to another. Just find a soundproof area. You can even record in an insulated ice chest in a quiet room.

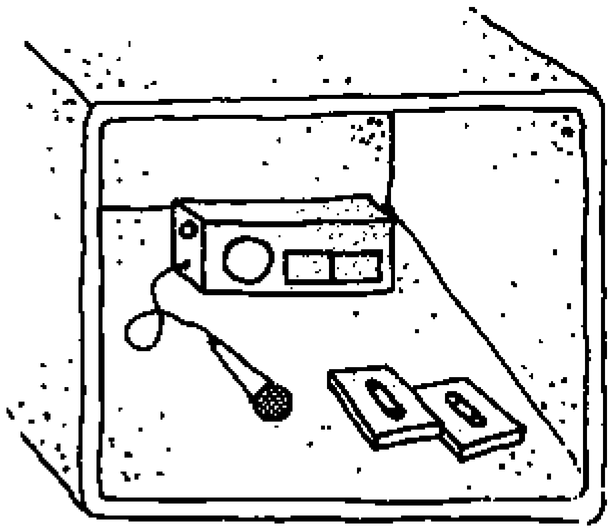

Problem 5: Photography

Good photography is difficult to master.

Solution

There are only 5 solutions to this problem:

- Stay with graphics.
- Ship it out to a professional.
- Hire your own professional.
- Have friends or colleagues help out by sharing their photographs.
- Take the time to master the skill yourself. Get a friend to teach you. With time you can learn about lighting, colors, camera stops, and techniques. It's not really that hard!

Problem 6: Updating programs

It is estimated that technical information doubles every 7 years. As a result, you will eventually need to revise some programs.

Solution

The frame format is ideal for revision. You can readily insert, delete, or reorganize chunks of information or concepts. Retaping and keeping visuals to the 80- or 120- frame limit are the primary obstacles.

However, if you are using the booklet format discussed in Problem 1 of this chapter, you have no problem. As information increases, increase the size of your book.

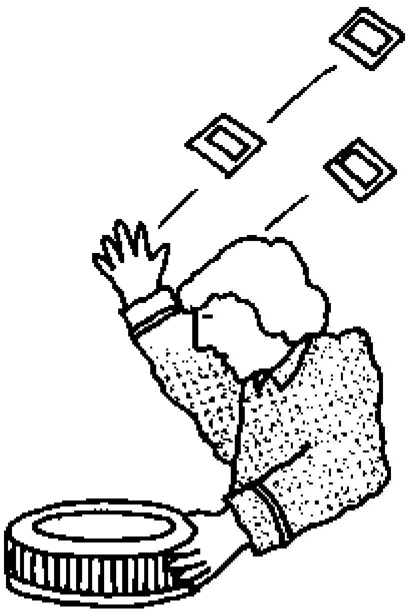

Problem XYZ

Any innovation has inherent problems that you must solve. You will undoubtedly encounter some not listed here. Be as creative in finding solutions to these obstacles as you are in creating your program. **It's part of the fun of being innovative!!!** In the next chapter, we'll talk about how to manage A/I instruction with the demands of students.

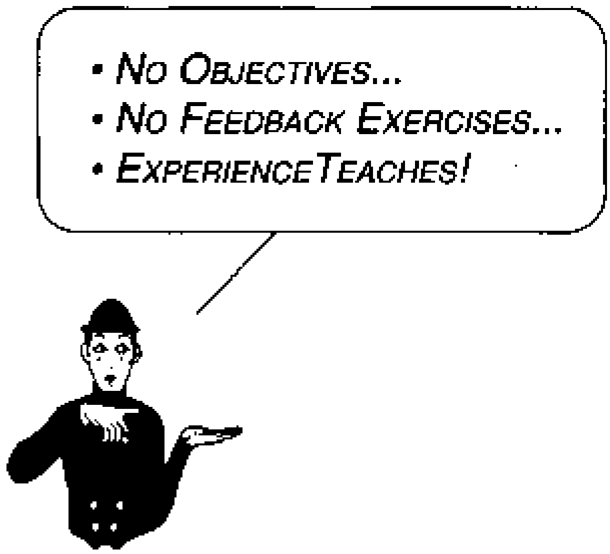

References and information of interest

Ostrander S, Ostrander N, Schroeder L (1979) Superlearning. Dell Publishing Co. Inc., New York, New York.

CHAPTER 12. Managing A/I Programs: Problems and Shortcuts

Prospectus

Now that you've got your A/I system developed and ready to run, what kind of problems can you expect to encounter in managing this teaching method? How can you solve them? We'll find out in this chapter, and learn more short cuts.

Rationale

Now that you're going to use A/I instruction, you'll have new responsibilities as a teacher. You'll also need to rethink the student/teacher relationship.

Problem 1: The new instructor/student responsibility

A/I places more responsibility for the learning process on the student. Many learning situations have an adult/child or parent/child relationship. A/I reduces these roles. Instead, the teacher, an adult, assumes the student is an adult and responsible for learning. Often, both students and teachers have difficulty with this role change. This is especially true if the students are immature or other classes still adhere to the more conventional teaching methods.

Solution

Before using A/I, talk to the students about the new method and explain how the responsibilities will change. Demonstrate a slide-tape program and discuss its advantages and disadvantages.

If you are an enthusiastic teacher and ask students to help you by giving feedback for an innovative instructional technique, they will feel a part of the process.

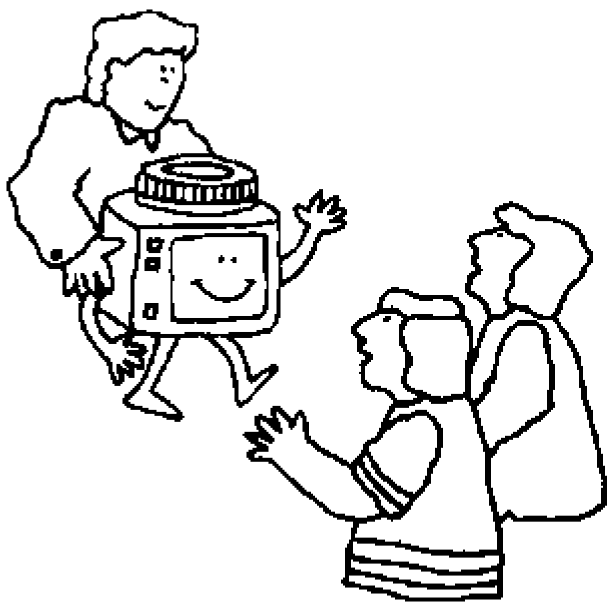

Problem 2: Space

Hardware and software are useless without space in which to store and use them.

Solution

It is best if you can get a special room for this purpose. Divide the room into individual carrels such as those found in a library. Each carrel will usually seat one student, but sometimes up to three can use the carrel simultaneously.

Control the noise level by providing earphones for the students. Because the projector does make some noise, locate the room away from quiet areas. Experiment until you find the best place.

Often, the rear of a laboratory will work because the learning environment in a laboratory is compatible with machine noise accompanying the A/I hardware.

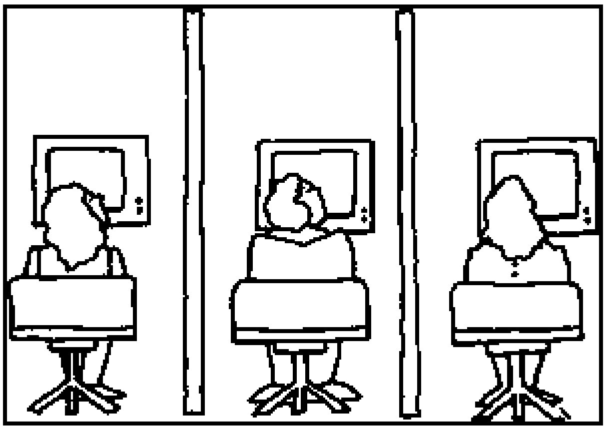

Problem 3: Using hardware

Slide-tape equipment, computer drives, and other teaching hardware are machines that need proper care to prevent damage.

Solution

Before beginning A/I instruction, teach students the correct way to use the equipment. Devise a step-by-step instruction sheet on how to run the video and audio hardware, rewind tapes, and check to see that all slides are present. Demonstrate these steps to students.

Give a hands-on skills test to each student. After accomplishing this, award each student a proficiency card.

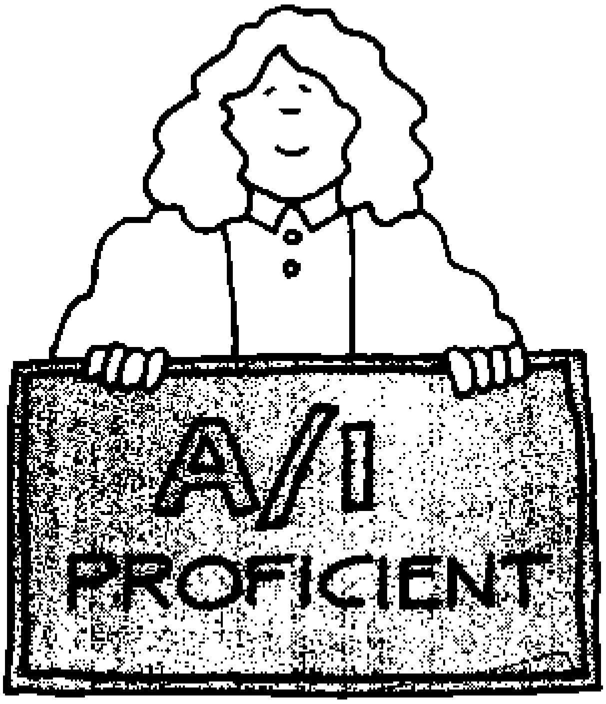

Problem 4: A check-out system

After you have taught students how to use hardware properly, devise a system of assigning software.

Solution

Some institutes have set up **learning resource centers** similar to a library. These units house the hardware for A/I instruction, and personnel check out the software when students show their proficiency certification card.

Often you can use an area of the library for software storage, and the librarian can check out the materials. Otherwise, the instructor can check out programs at specified times.

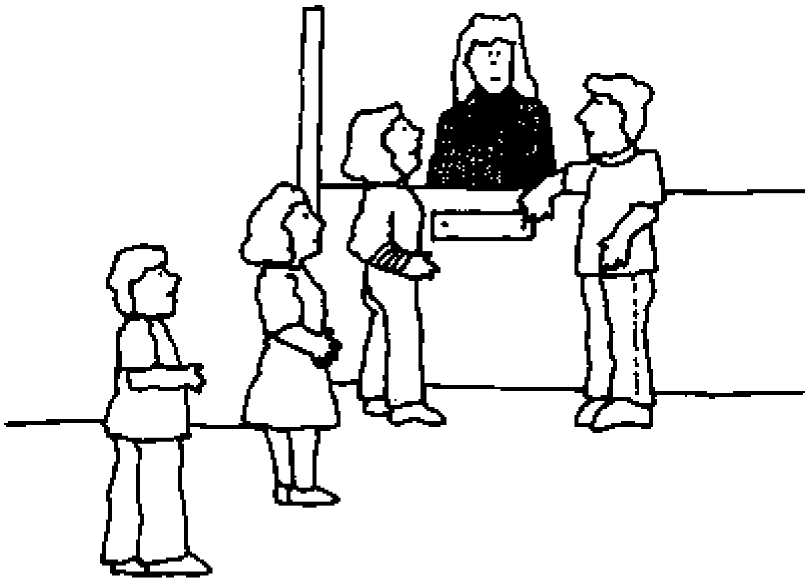

Problem 5: Demand for accessibility

Self-pacing, easy access to programs, and the option to explore and repeat material are some of the advantages of A/I. However, you can have problems if you do not have enough programs or hardware to fit the number of students.

Solutions

Spares*.* When duplicating software, make two spare copies. You can use these programs as spares during emergencies. Also, when ordering hardware, order one extra component to use during repairs. Keep a supply of projector bulbs available.

Extended borrowing time*.* To make programs available to more students, you do not always have to have more equipment. Sometimes, you can simply extend the time that programs are available to students. Often libraries have extended hours. If you can house and coordinate A/I programs with library activities, you can serve more students.

Sign-up sheets*.* Sign-up sheets can also regulate the demand for programs during peak times. Of course, this compromises one of the advantages of allowing students to learn when they desire. You could also divide the class into groups and allow each group access at certain times.

Pilot study*.* You can manage program accessibility if you implement A/I instruction by degrees and adjust the system according to student feedback. Try a student-use study to see how long students need to use the machines.

Time calculation*.* Usually, students spend an average of 1 1/2 hours on a 30-minute module. They study at the machine and not at home. Students who are not studying in their native language will use the program as an aid to foreign language study. As a consequence, they may use the program **twice as long.**

An example. For example, if you conduct a course completely by the A/I system, 5 stations, if available for extended hours (70 rather than 40 hours/week), will accommodate 70 students. This allows a student about 5 hours/week to explore three 20- to 30-minute modules.

SOME CALCULATIONS	
80	frames/program
× 20	seconds/frame
1600	seconds/program
60	seconds/minute
= 20-30	minutes/program

Students will use part of the time at the station to review, study objectives, and do evaluation exercises. Even so, 5 hours/week per student should be adequate.

Problem 6: Hardware that doesn't work

Hardware often won't work just when you need it most. Some developing countries experience frequent and extended power failures.

Solution

Find out ahead of time where you can find adequate repair facilities for the hardware and how long it takes to have it fixed. Plan your assignments and reserve equipment accordingly.

With some ingenuity, you can modify hardware to function on AC or DC batteries. Then when a power failure occurs, you can switch to battery power. Another option is to have your own generator.

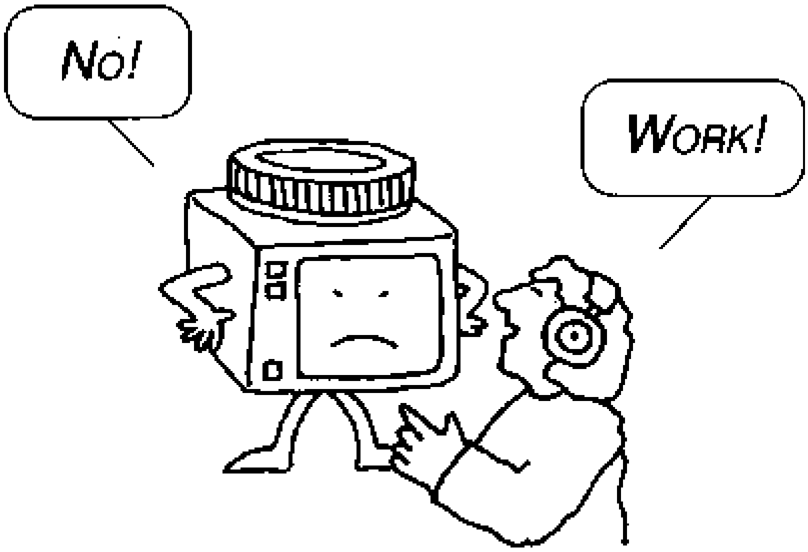

In this chapter, we have discussed 6 of the most common problems of using and maintaining A/I programs. You will encounter other problems depending on your institution, finances, and culture.

We also talked about the new role of the A/I teacher as a facilitator or a manager. Our potential problems and solutions may help you assume that role.

Perhaps you think these last two chapters on helpful hints are less important than information on software creation, objectives, and feedback exercises. However, once you begin using A/I, these hints will take on a new significance!

Another significant word is one in the title of this publication, guide.

There are whole books written about

- visuals
- educational theory
- programmed learning
- adult-to-adult teaching (andragogy)
- the information explosion
- writing objectives
- evaluation

This publication is a brief discussion of these concepts as they relate to technology transfer.

It is hoped that you learned from this publication. For additional assistance in your self-learning mode, please read the books and articles listed at the end of each chapter.

***Parting Note:* You will notice that most references in this guide are between 10-20 years in vintage. That means the technology has been around for a long time! Even then, we have to add a few more years because a piece of work takes some time for R and D before it gets cited.**

***A suggestion:* Maybe it's time to get aboard - catch up and take the challenge to transfer this technology into your domain?**

APPENDIX

How to make a copying stand

You can build this simple copying stand inexpensively (Fig. 1). You use it to hold a 35-mm camera when you photograph artwork or copywork. You'll need these materials:

- 1 piece plywood, 3/4 × 24 × 24 in
- 4 flathead bolts, 1 /4-20 × 2 in
- 1 carriage bolt, 1 /4-20 × 4 in
- 5 washers, 1 /4 in
- 5 wing nuts, 1 /4-20
- glue
- finishing nails, 4D
- lacquer or enamel, matte black

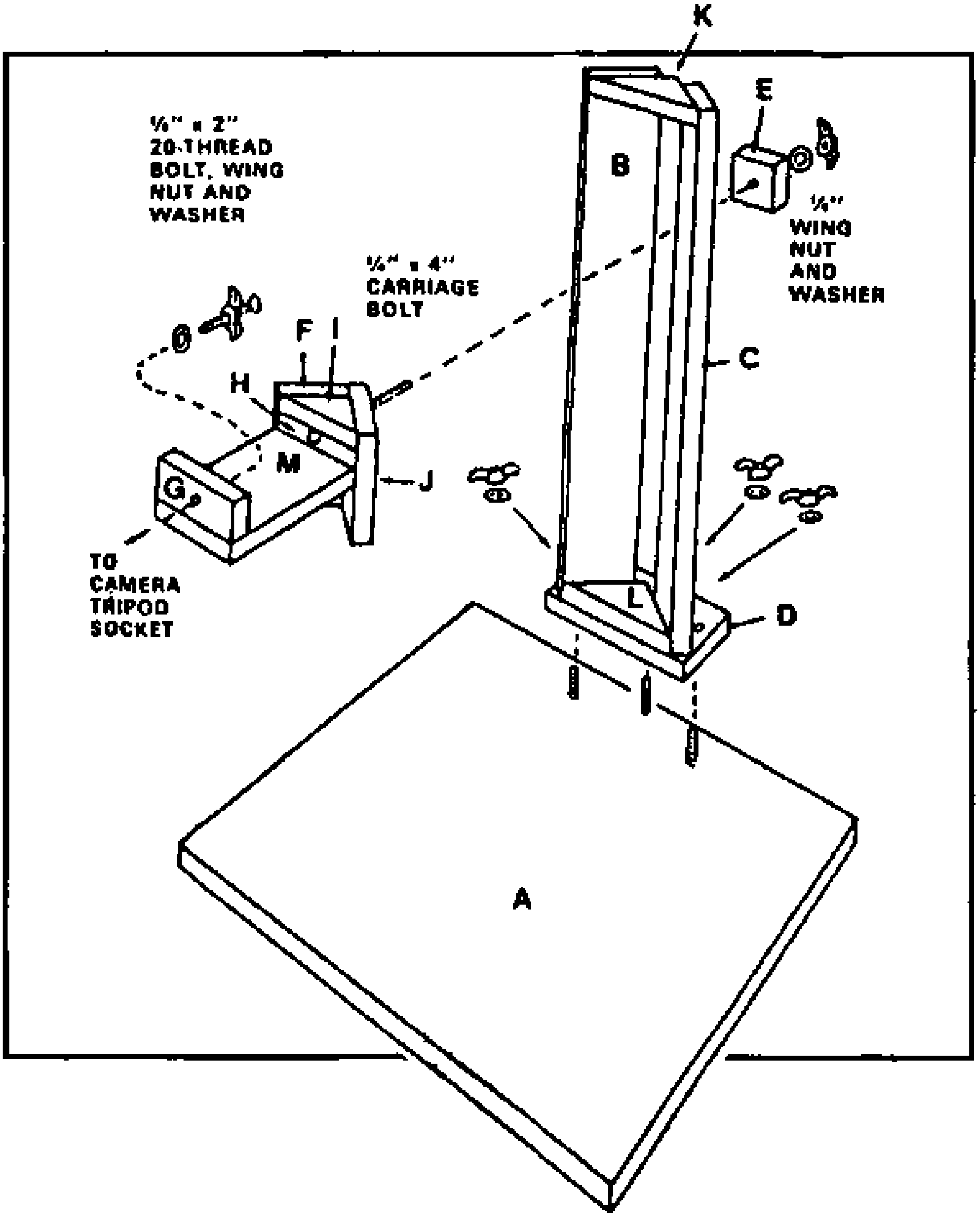

Figure 1. The assembled copying stand is shown partially unpainted so you can more easily identify the elements that can be disassembled for portability; the finished stand should be completely painted matte black.

Constructing the stand

You can cut all of the wooden parts from your single piece of plywood (Fig. 2).

The dimensions in Figure 3 are not critical. You can reduce them by the width of the saw cut. Cut right angles accurately so that you can position the camera properly in relation to the reflection copy.

Glue and nail all permanent joints for rigidity. If you don't have to disassemble the copy stand to store or transport it, you can also glue the camera support column to the base.

Paint the entire stand matte black to minimize light reflection.

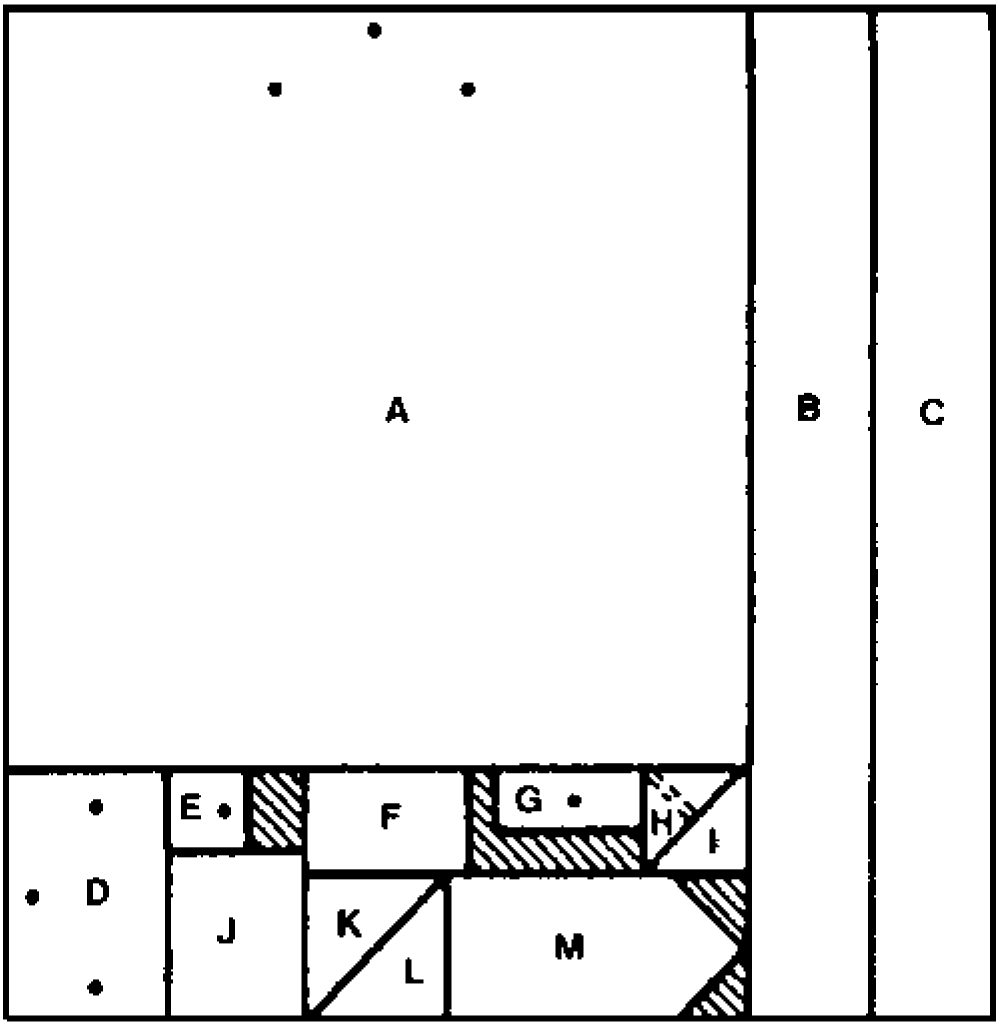

Figure 2. Cutting layout - 3/4” plywood, 24” × 24”. Code letters are a guide to assembly.

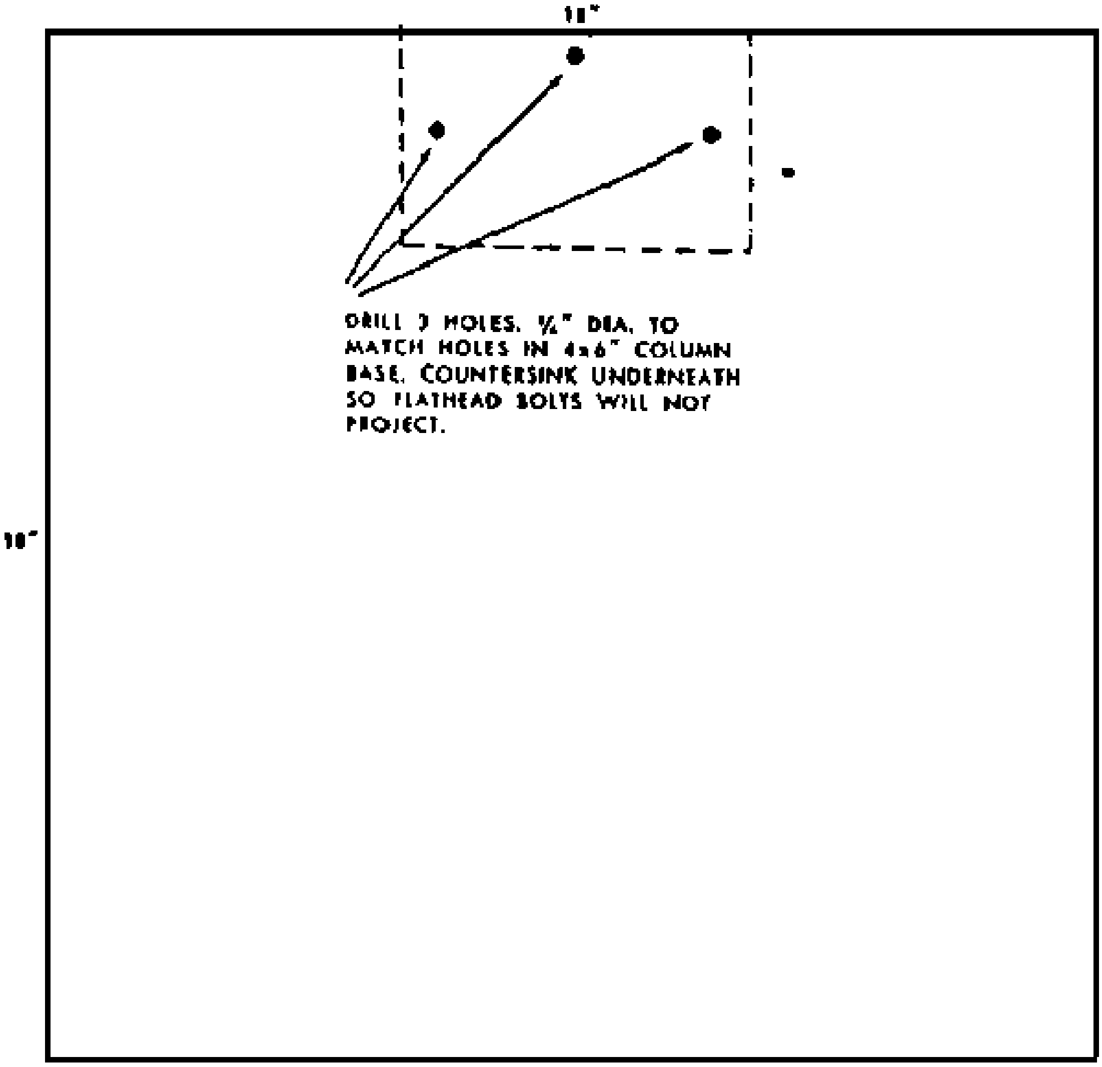

Figure 3

SOURCE: Kodak. 1968. Producing Slides and Filmstrips, Data Book S-18. Eastman Kodak Co., Rochester, N.Y. pp. 22-24.

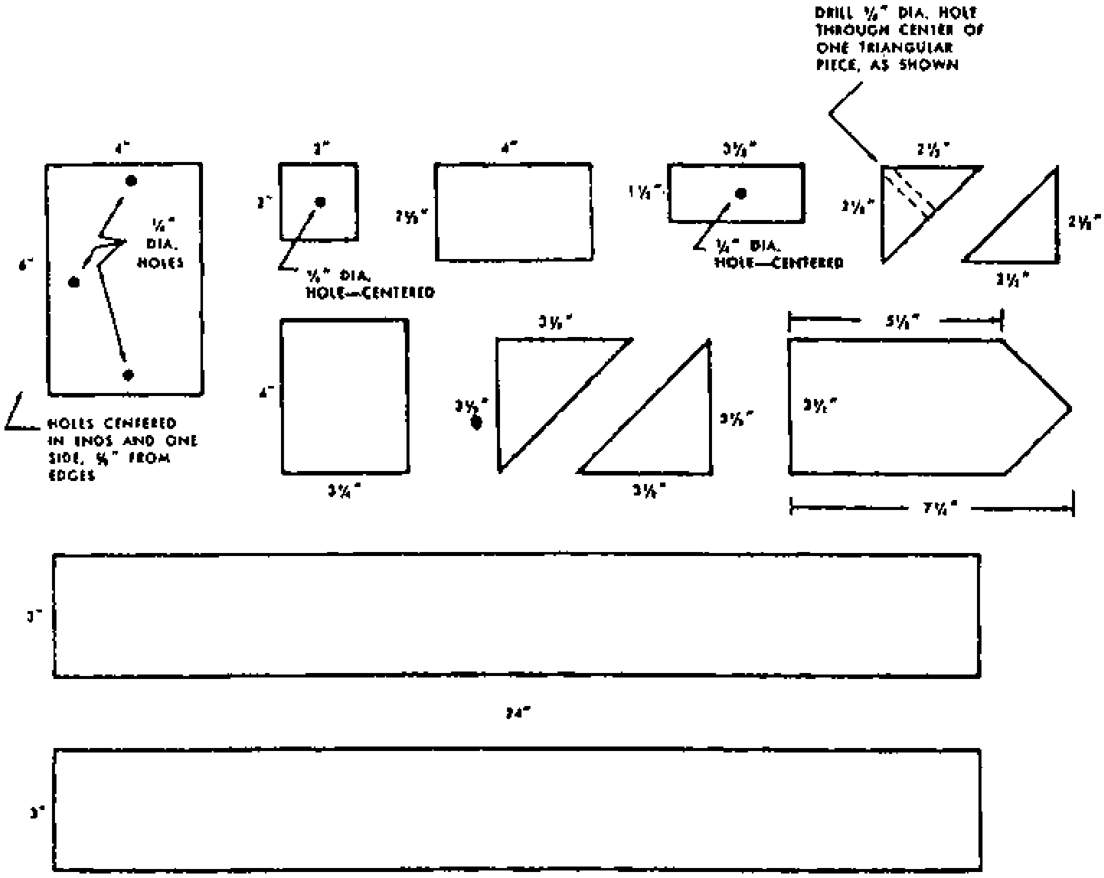
DRILL
DIA. HOLE
THROUGH CENTER OF
ONE TRIANGULAR
PIECE, AS SHOWN
DIA.
HOLES
HOLES CENTERED
IN ENDS AND ONE
SIDE,
FROM
EDGES
DIA.
HOLE—CENTERED
DIA.
HOLE—CENTERED

Figure 6

TEACHING IN THE TVET SYSTEM

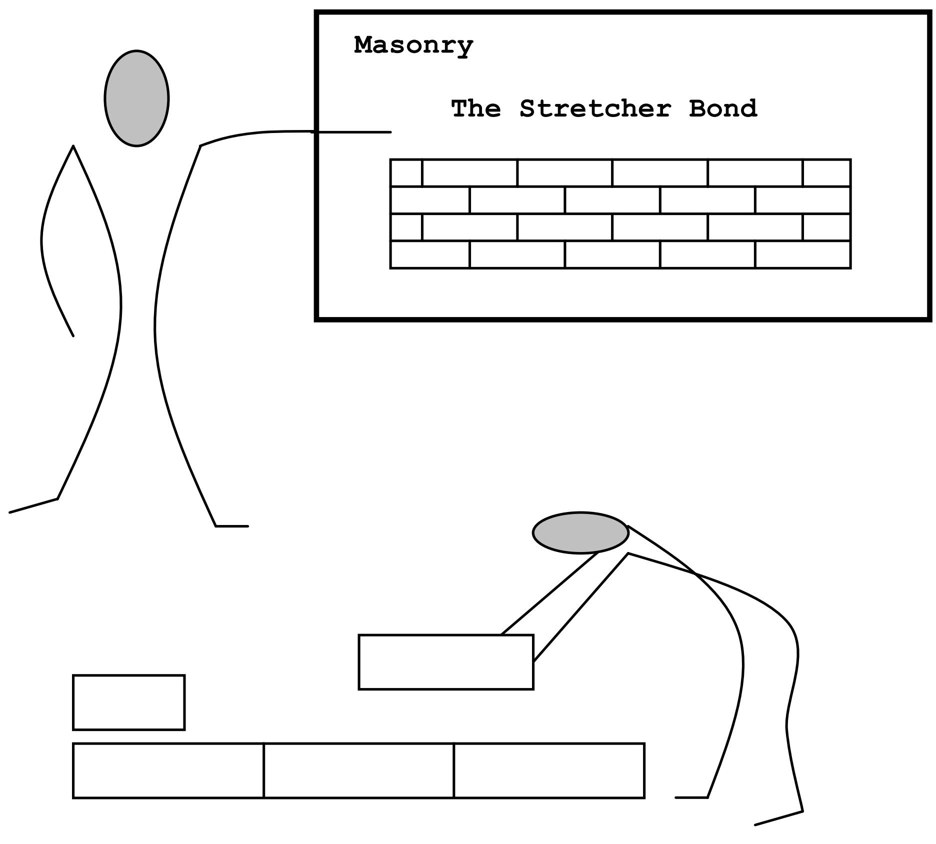

A CONCEPT FOR THE TRAINING OF VOCATIONAL TEACHERS

Robert Schrembs

For the use of this book:

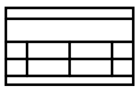

This sign is the symbol for a lesson form. It announces that the explanation is based on the example in the first section and should help to make explanations concrete.

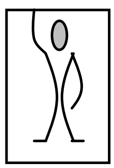

This symbol indicates an experiment that was done to give a proper explanation or shall be seen as a request for doing a practical exercise.

Depending on the organisation to which an institution belongs, there are different terms in use. In this book, Vocational Training Centre, Technical Training Centre, Technical Training Institute, Vocational School and Vocational Training Institute... are used synonymously. The same goes with the terms for the staff: (Vocational / Technical) Teacher, (Vocational / Technical) Trainer, (Vocational / Technical) Instructor…

1 The Particular Role of an Instructor

The qualification of teachers at technical and vocational schools and training centres are different from those of the general educational sector. Instructors are not only teachers or educators. They are craftsmen and sometimes they have to work as advisors, in particular, as business advisors. Hence, an instructor has to have a variety of abilities.

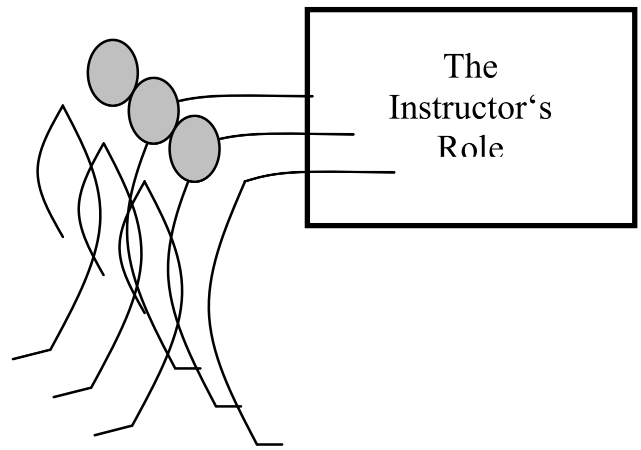

1.1 Personal Competencies

Instructors are not born as instructors, they have to be trained. Some people might have a particular talent for teaching but most people don't. However, teaching can be learnt. A major prerequisite for this is that a person wants to teach. Someone who is urged to teach can never be a good teacher. Apart from abilities that can be trained, a teacher should have some character capabilities.

A model instructor has a well-balanced personality and is not temperamental. This will help trainees to build up confidence in the instructor and lead to a good mood in the classroom. He / she should have natural authority and be able to guide young people. What is meant is the art of dealing in human relations. To be able to move individuals forward for their best efforts. Being a leader requires having a sense of responsibility. Furthermore it is helpful to love justice and be objective and co-operative. Patience is essential.

Indeed, it is hard to find somebody who unites all these characteristics. However, everybody who is teaching young people should consider these as goals to be achieved in his job.

1.2 Pedagogical Competencies

This type of qualities can be acquired during the teacher training course. It can be regarded as the contents of a teacher's apprenticeship.
First of all a teacher must be able to choose the correct and most important topics of a trade. Not everything can be learnt within the period of training. The second step is to group these topics into logical units and prepare proper lessons with it. Planning and running a lesson requires competencies in the whole field of teaching techniques. The most important are covered in this book. He should be able to transfer theoretical knowledge as well as practical skills.
In addition to the transfer of knowledge, an instructor has to advise the students mainly in the field of job finding or self-employment. Sometimes students even look for advice in personal affairs.

1.3 Professional Competencies

These abilities include the professional skills. A teacher should have acquired them during his own apprenticeship as a craftsman and his working experience.
He / she must be a master of his / her trade. To be a master does mean being a model. It is not enough to be a craftsman but a good craftsman. An instructor should always keep his / her eyes open for changes and developments in his / her trade. Instructors should always be up-to-date and interested in further training and upgrading. It is very necessary to have a wide range of general knowledge too.
Finally, there are organisational and administrative duties which an instructor has to do.

1.4 Styles of Leadership

Features	***Autocratic***	***Democratic***
Guidance	It is the instructor who is guiding. He / she gives orders what to do and what to leave. The teacher is the undisputed master of the situation. Initiatives of the students are not tolerated. The teacher provides the information he / she declares to be important. The teaching style is usually the presenting one.	The instructor tries to integrate the students. He / she wants to encourage trainees to develop their own initiative. The organisation of the classes is done in co-operation with the trainees. Trainees get comprehensive information to enable them to build up their own opinion. Teaching style is the developing and discovering way.
Esteem	The trainees are not regarded as partners and instructors normally insist on sovereignty. Teachers don't place confidence in the trainees. The teacher's attitude is pessimistic and the atmosphere is cool.	Teacher and students regard themselves as partners. The teacher is open to problems of the students. The instructor presumes the trainees' willingness to learn. His attitude is optimistic. The atmosphere reflects mutual acceptance.
Praise / Rebuke	The teacher has often something to criticise. He punishes quickly when his / her orders are not fulfilled. High achievers are presented as models.	The students are urged to control themselves. The instructor investigates the reasons for any failures. The criticisms are objective and constructive. He / she praises often and avoids punishment.
Conse-quences	Initially it allows the transfer of a lot of knowledge. However, trainees are not very motivated and feel uncomfortable and under pressure. Students become receivers, their own initiative is killed, and creativity is blocked. Trainees develop a negative attitude towards the teacher.	The speed of learning is lower in the beginning but increases quickly. Trainees learn autonomously. They develop interest in learning. Spontaneity and creativity are promoted. The students feel comfortable. The mood among trainees is relaxed. There is "fair-play".

2 An Excursus to Educational Psychology

Learning can happen always and everywhere. What is called teaching can be defined as *planned and organised learning*.
Educational psychology provides knowledge and information to optimise learning processes. Educational psychology for teacher training is focussed on optimising the circumstances in school. Apart from educational policy, it is the qualification of teachers which gets priority. Psychological knowledge shall enable them to reach the highest level of efficiency in their teaching efforts.
Learning is part of the human "information technology". Information has to be received, saved (scientifically called "coding") and shall be recalled. Receiving and coding. Together constitute the actual learning process. Recalling of information is named *performance*. New impressions or additional knowledge permanently influences coded information in our brain. Knowledge varies through experience. To be able to remember facts ("decoding") after a certain period depends to a great degree on the way it was coded. Sometimes one can only remember some details but with the time everything is remembered. Hence, coding and decoding cannot be compared with a tape-recorder, which replays exactly what was recorded.
Within this excursus it is not possible to cover all aspects of educational psychology. The intention is to introduce some areas, which are closely connected to our teaching routine. Our major concern as instructors is to transmit knowledge that trainees are able to learn and to remember easily. Instructors can promote this.
In the first place it is important to have some knowledge about the human *memory system*.

2.1 Memory And Information Processing

The human memory system has three components: the sensory memory, the short-term memory and the long-term memory. When information comes for e.g. in pictures, a written text, spoken words or a song, it will either be coded or forgotten again.

☞ Sensory memory

It can save information for only less than *one second*. It helps to transmit in-coming information to the short-term memory. For example: while reading these sentences you have already forgotten the words with which the last sentence or even this sentence started. These words were only in the sensory memory and helped us to identify the information.

☞ Short-term memory

It can save information for about *15 seconds*. The capacity of the short-term memory is limited to 7 items. While information is in the short-term memory it can be *reinforced* (e.g. By frequent repetition). This means that we are coding this information to store it in the long-term memory – we try to *learn* it! This coding can be influenced positively e.g. through visualisation and assimilation. How fast and easy we learn depends on the type and intensity of the reinforcement received. When the information is not reinforced it will drop out again.
It has to be acknowledged that coding does not only occur willingly. For example someone had a car accident. This accident was so terrible that the incident itself had such a reinforcing character that the person always sees the terrible pictures and cannot forget them, even if he / she wanted.

☞ Long-term memory

It can save information for a very long time, even for lifetime. The capacity of the long-term memory is generally unlimited. Whether information can be remembered (decoded) easily or not depends on the way it is coded. Sometimes information is lost because we cannot find the key to the right door in our brain. In addition, misuse of alcohol and drugs can destroy the brain cells where information was stored.

Information Processing

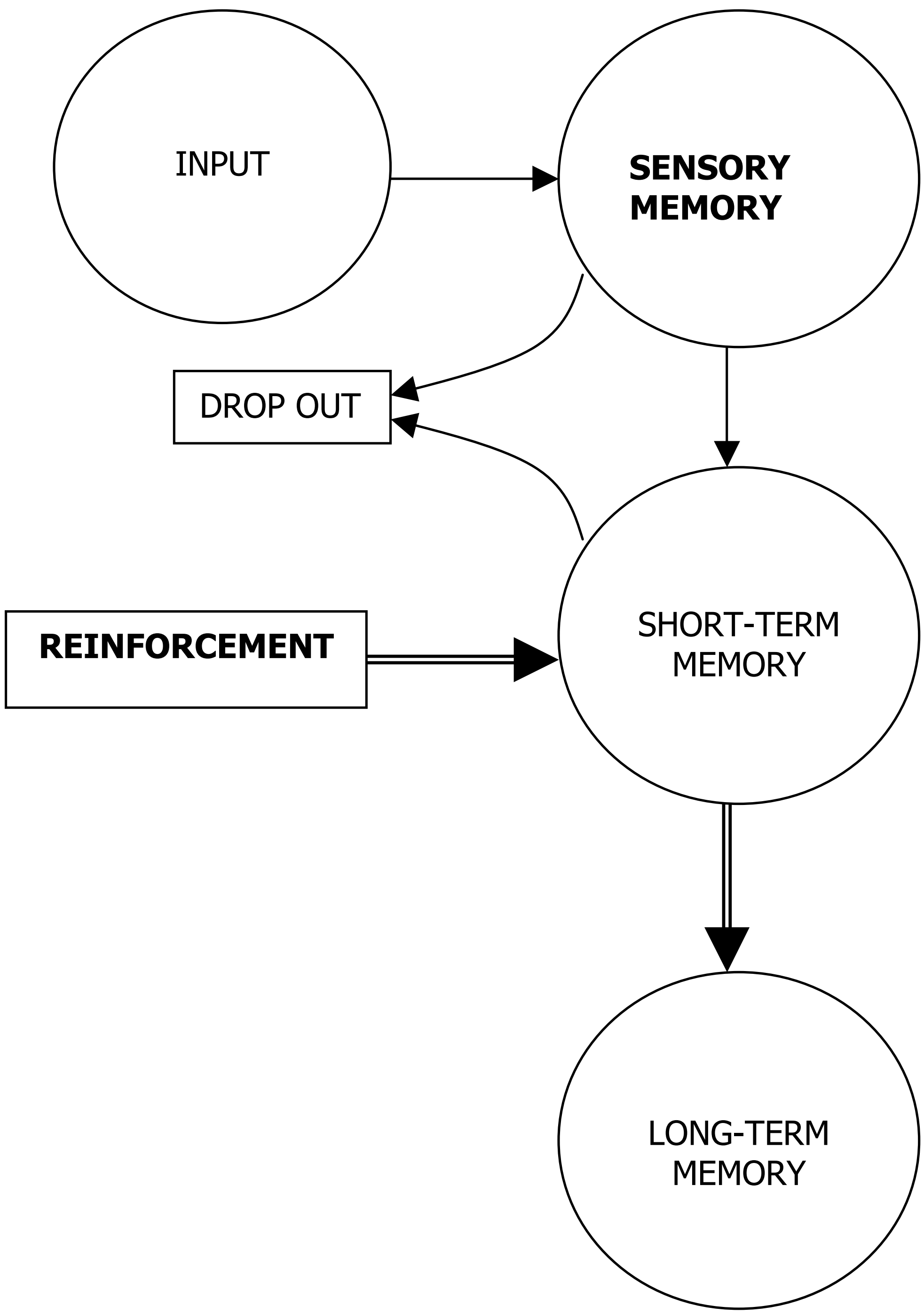

2.2 Visualisation

Experiments showed that the human brain (cortex) can be diverted into two parts (hemispheres). The two hemispheres take over different tasks and react on different inputs.

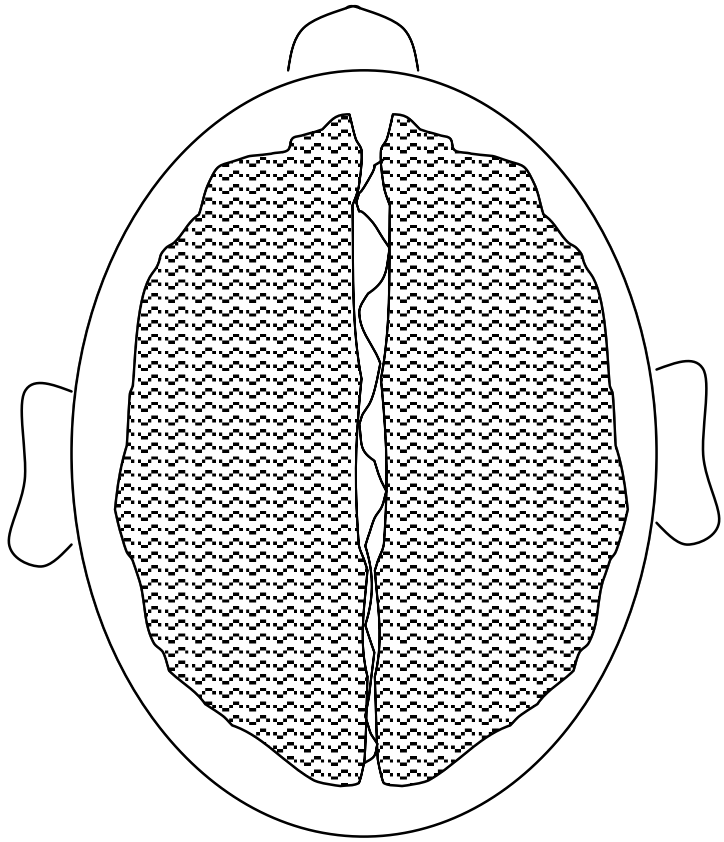

Left hemisphere	Right hemisphere
Connection to consciousness	No connection to consc.
Linguistic	Musical
Conceptual	Visual
Arithmetic	Geometric
Analytical	Homogeneous
Abstract	Concrete

To demonstrate this essential difference, an experiment was done in several workshops (following an experiment on eidetic from DÜKER).
The participants were divided into two groups. Everybody was asked to do a simple line drawing. However, one group got only a written description of the picture whereas the second group got the picture itself. Both groups could study their information for 5 minutes and then had to put it away and were allowed to start drawing.

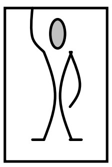

If you want to do the experiment on your own, just study the following text for five minutes, put the book away and try to draw the picture. When you are finished, continue with the book.

Experiment 1

"The picture is a line drawing. It is rectangular, landscape. A horizontal line in the middle and a diagonal line leading from the left bottom corner to the right top corner divide the picture into 4 sectors.
In the left top sector you see the front of a truck with 2 mirrors, a smiling driver and the plate. The truck has the licence number: GR 7431 T. The front shows the inscription: JESUS IS LORD, diagonally written in capital letters. On the driver's side there is a huge smoke from the exhaust. The right top sector shows a ladder going from the bottom to the corner. The bottom left sector shows a fish swimming from right to the left. In the bottom right sector you can see three matchstick men and a bunch of flowers on the right. The person in the middle is the tallest and is laughing. The person on the left is the smallest. He looks sad. The right one is also looking sadly."
"Study this text for five minutes. Then put it away and start drawing without the help of the text!"

The second group was allowed to study the original picture shown on the next page. After 5 minutes they had to take it away and start drawing too.

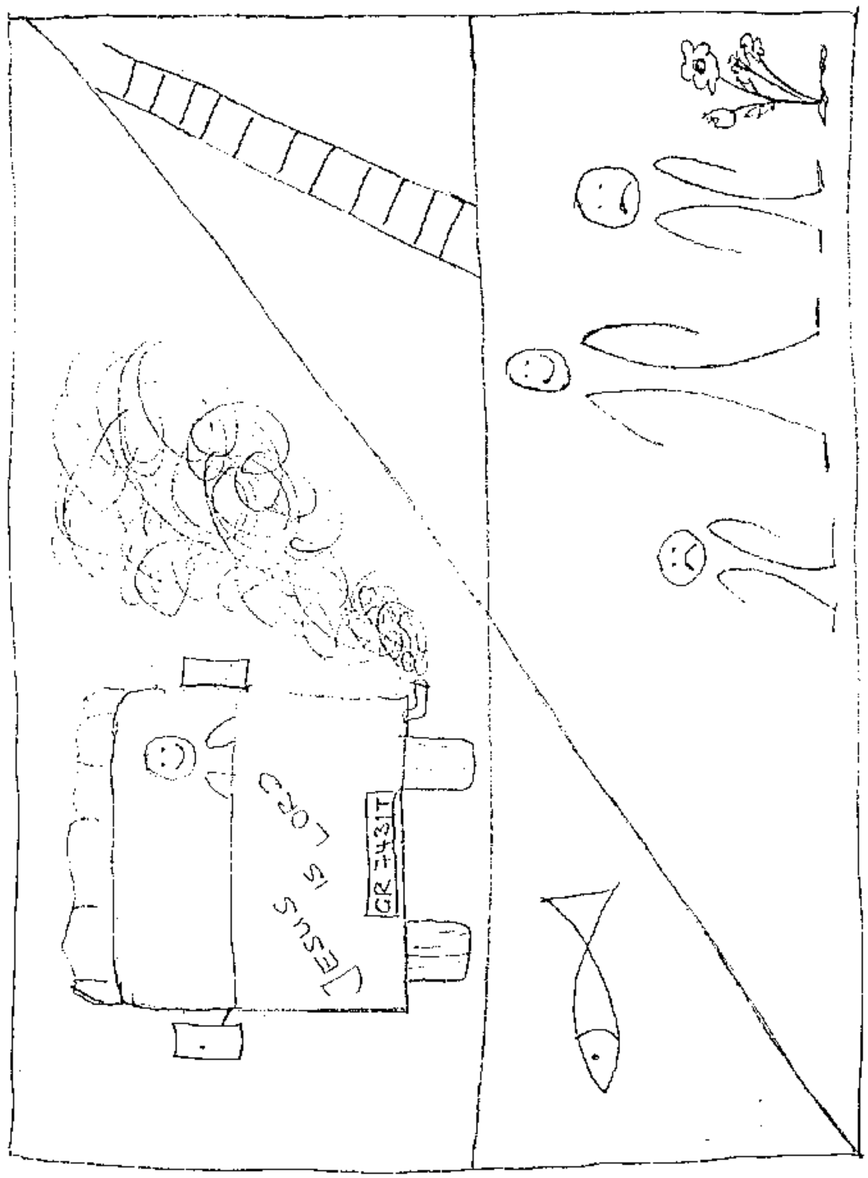

Model drawing

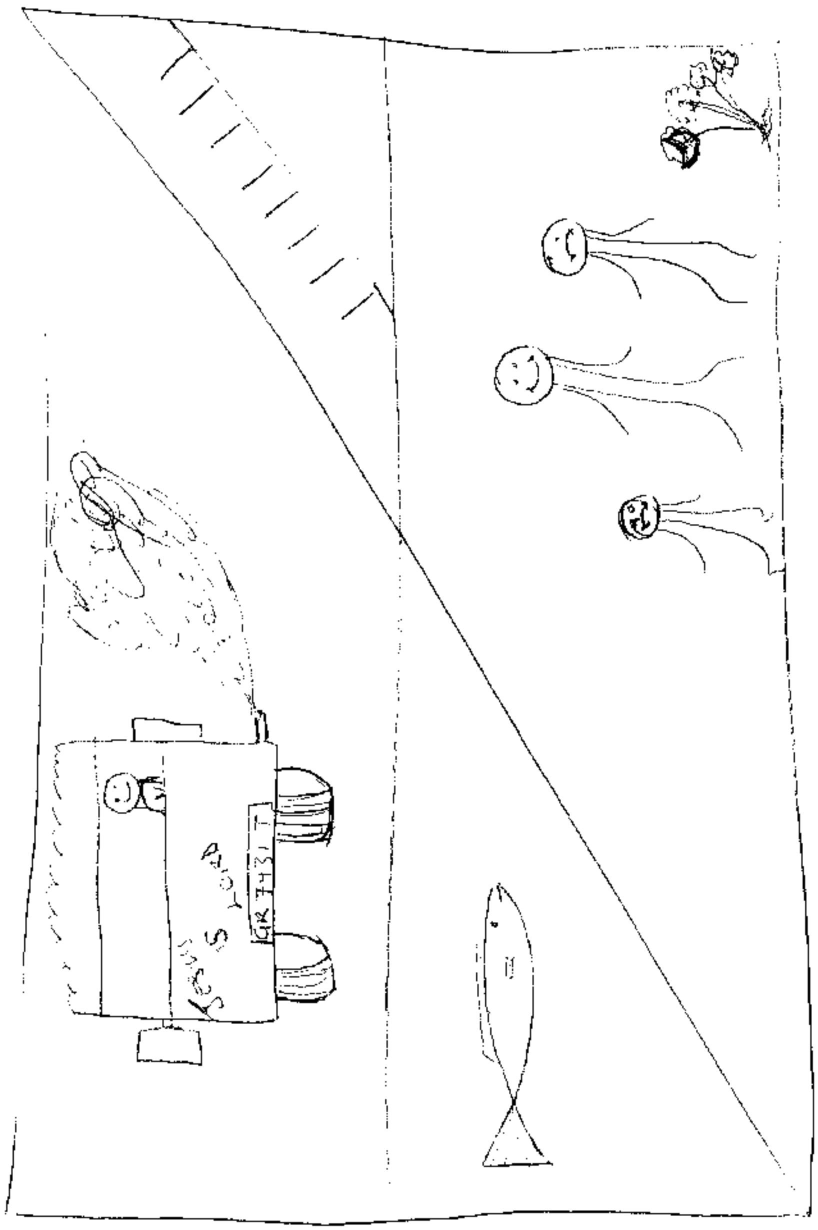

Drawing of a participant who saw the picture

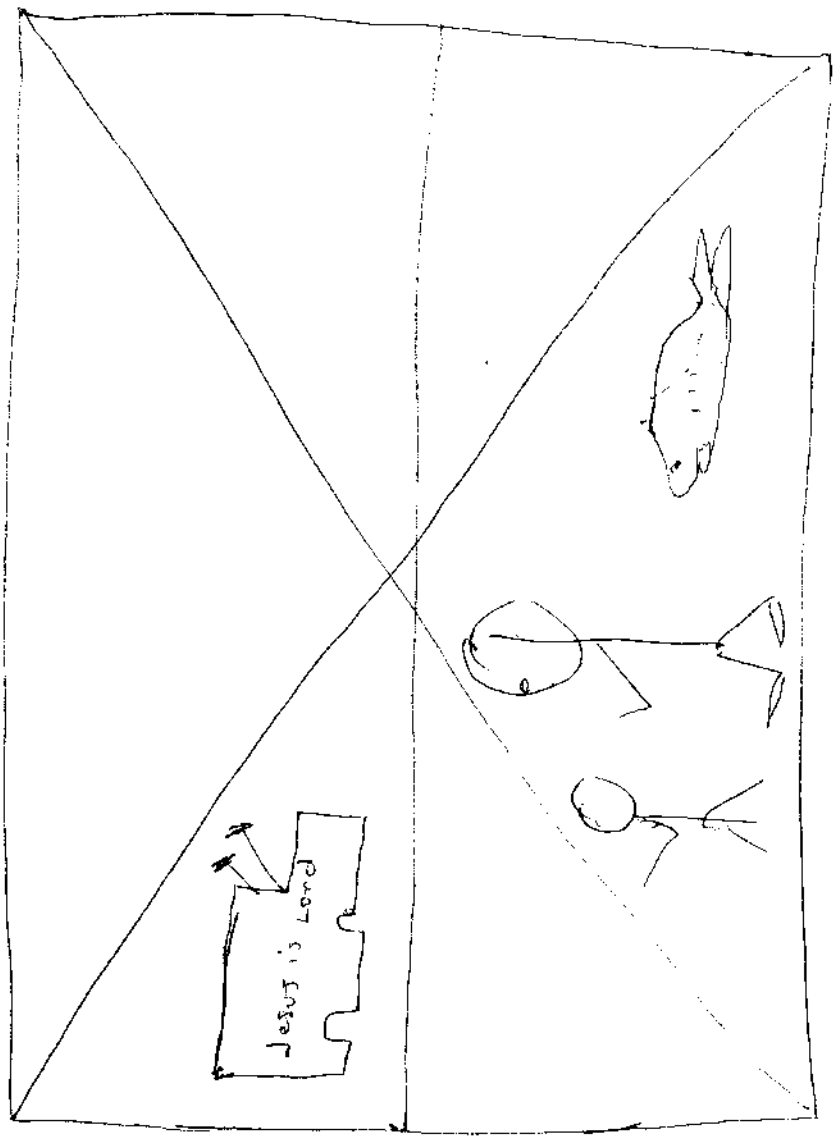

Drawing of a participant who had only the text

Conclusion

The experiment shows that sometimes pictures can explain things much better and easier than words. Long explanations do not have the effects that a picture can have. Those persons who had only the text had first to transfer the written information and create a picture. The written information was only directed to the left hemisphere of the cortex. They had to make an abstract information concrete. This process was so difficult that finally the information could not be coded.
The second group saw the picture. The right hemisphere is well prepared to take up this type of information. Coding is easy and the results are overwhelming.
Whenever an explanation cannot satisfy trainees it might be that it was done the wrong way. A picture can say more than thousand words.

2.3 Assimilation

New information can be coded easily when it can be assimilated with something familiar. It justifies why teachers start a new lesson by referring to the last one. An experiment shall demonstrate this, too.

Experiment 2

A test group was shown a shelf with 6 drawers, providing space for the following products:

Vegetables	Drugs	Minerals
Tools	Fruits	Chinese

Then one person was given a basket with the following items in it:

1 bottle of Coca Cola
1 package of Aspirin
5 tomatoes
1 pineapple

6 porcelain cups
1 hammer
1 video-cassette
1 litre of milk
5 potatoes
1 mini accumulator

The person was asked to store the goods in suitable drawers.

Result

The person did not have problems to store the Coca-Cola, the package of Aspirin, the tomatoes, the pineapple, the porcelain cups, the hammer and the potatoes. She found a suitable place for everything but had problems with the video-cassette, the milk and the mini accumulator. She did not know where to store the milk and the video because they didn't seem to have an appropriate place. The person did not know what a mini accumulator is.
The person was then asked to store the left items somewhere. At the end of the workshop the person was asked to retrieve the videocassette from the shelf. It took some time to remember where the videocassette was, whereas the participant was able to find the aspirin immediately.

Conclusion

Our brain can be regarded as storage too. When there is new information coming in which has already a background, this information is easy to store (code). Storing this new information somewhere can make it difficult to find it (decode it) again later on.
Therefore we should always try to give information in a familiar context. Isolated knowledge is dead knowledge! The same goes for unstructured knowledge. If the drawers of the shelf did not have labels or the bag with the tomatoes was not transparent, it would be difficult to store these items.

3 Course introduction

The following teacher training course can have as a title „how to plan and run a lesson successfully‟. A successful lesson means that at the end of the lesson the instructor was able to download his knowledge and the trainees really understood what was taught. As we saw in the last chapter, the human being‛s mind is limited in learning. We cannot process all the information we are given. The instructor as master of the subject has the task of pre-selecting information for the trainees and to make the knowledge trainee-oriented. It means that the information that is given to the learner has to be organised and systematically planned. This is a main condition for the students to be able to pick up the new knowledge easily. It is our aim, to make the trainee a skilled person during his apprenticeship. The importance of Vocational Training has already been explained above. Consequently the instructor has to check permanently whether he was clearly understood or not. Time is wasted when a lot of information is given but not understood by the trainees. The more interesting a lesson is the higher the motivation of the trainees to learn. Variation makes a lesson lively. Therefore several methods of teaching and teaching aids will be introduced. „Plenty fish does not spoil the soup‟ is a Ghanaian saying. It is suitable for a lesson too. This course‛s aim is to make teaching more efficient on the one hand; on the other hand it shall make teaching easier for the instructor. For this course section not to become to abstract it is preceded by a lesson and most examples refer to this lesson plan. In the beginning a lesson form will be introduced. There exist various types of lesson forms and many teachers have developed what is suitable for them. The following one was developed and modified in some of the courses that were held with Ghanaian colleagues and declared to be convenient.

3.1 The lesson form

A lesson form should help the trainer to structure the lesson so as to be a guideline. It should cover all information needed to run this particular lesson. When planning a lesson with the help of this form, always remember to do it as easy as possible. So please write down any information you might need.
The form is divided into three sections: (A) the information line, (B) the blackboard notes and (C) the lesson course.

(A) The information line
It is so-to-speak the administrative part. It keeps information about the department and trade for which the lesson is planned, the subject and the date and last but not least, the topic of the lesson. This makes it easy to store information and find it again.

(B) The blackboard notes
When speaking of a blackboard it is not necessarily a blackboard. It doesn�much matter which type it is. Sometimes it is a whiteboard or whipe-board or even a chalkboard. This field is where the teachers write down the notes that will later on be written onto the board in the classroom. In a later chapter you will get more information on how to use a chalkboard.

(C) The lesson course

This part shows the actual order of events during a lesson. It is based on the „four-step-method" that will be explained later.

C1 contains the opening of the lesson. It tells the user how to begin the lesson, how to introduce the new topic. In the four-step-method it is called preparation or introduction.

C2 represents the presentation step.

C2.1 shows the specific objectives (introduced in chapter 7)

C2.2 gives information about how the objective will be treated, how the instructor plans to go about this matter. The various possibilities will be treated later as well.
C2.3 tells you which method is intended to be used and the teaching aids you need for this particular step of the lesson. In case this lesson plan will be used, let's say one year later, the instructor just has to look to this section to see what items are needed to run this lesson.
C2.4 contains questions or other tasks that give a feedback
C2.5 schedules the time

C3 contains information about the way the instructor wants to run the application step.

C4 bears the ideas for the final check-up.

Maybe it is better to introduce this form at the end of the course, because most of the expressions might be new to some readers and the explanation is found in later chapters. To present it in the beginning shall provide a better overview and make it easier to understand the given examples in the right context.

3.2 A model lesson

The following lesson is out of the subject THEORY. It is about THE DANGERS THROUGH ELECTRICITY. The main reason why this example was chosen is that this topic is suitable for almost every trade except those areas where is no power at all. Dressmakers may use electrical sewing machines or at least an iron. People of the catering field use a cooker. Carpenters and joiners have several woodworking machines. The concrete mixer is used in the whole masonry field and electrical welding is common in all „metal trades". The briefing of the lesson shall show how the instructor planned to go about this topic. Details of the lesson plan will be explained more intensively in the subsequent chapters.

Introduction / Preparation

The instructor starts the lesson by showing a chart (see chart # 1). It shows a person shivering after touching a faulty concrete mixer (dressmaker may use an iron, carpenters a band saw and so on). The trainees are asked to describe what they see. This will lead to the topic: DANGERS THROUGH ELECTRICITY. The topic will be written on the chalkboard. As it is Ghanaian custom, a definition of electricity is given. The trainees are asked how electricity can influence their work. Trainees could also comment on the saying „electricity is a good man and a bad man". The result might be a sentence as it can be seen on the lesson plan: „electricity is helpful in various trades. It makes machines run and gives light".

Presentation

The teacher stated three specific objectives for this lesson and treats them one by one.
First he wants the trainees to be able to enumerate some sources of accidents through electricity. Therefore he is reading an article (fake) in a newspaper (see „daily graphic") and after that he asks the questions noted in the lesson plan. The answers will be written on the chalkboard. The question „What other types of accidents can happen" gives the trainer a feedback whether the trainees understood or not. When he is satisfied, he will go to the next objective.
Trainees should be able to explain the electrical shock. For this reason the teacher shows two types of cables and continues referring to the lesson plan, ending with a question about fuses to check understanding.
The last step is to make trainees alert to the importance of workplace safety. This will be done in group-work. The trainees are given 10 minutes to discuss among themselves in various groups, how an accident can affect an individual, his or her family and his or her employer. The groups write their answers on cards (explained in

chapter 13) and the group leader presents the results. To get a feedback, some trainees should comment on the statements.

Application

This is the time when trainees apply the new knowledge. They were asked to create some safety regulations. The results are fixed on the chalkboard.

Final check-up

This step can be seen as a short summary of the whole lesson. In this case asking the question „Why can even somebody's family be afflicted by an accident through electricity" does it. Most of the trainees should be able to answer properly by explaining that it can hurt a person or even kill him/her. The family will be affected because a family member is without income temporarily, and so on. END OF THE LESSON.

“DAILY GRAPHIC”

Last Monday a report of the Korle-Bu Teaching Hospital in Accra was published. The spokesman of the hospital said that within the last two weeks 16 persons have been treated because of accidents at the workplace. Most of them had an electrical shock. The man said that 10 persons were using a faulty machine and got a shock from it. Another 3 persons touched a cable that was old and not properly isolated. The hospital‘s official explained that at least one person was drunk and was shocked when he tried to connect a concrete mixer with the socket. He wanted to remove the safety of the socket with a nail. He further said that this person was very lucky, because the high voltage could even have killed him. The speaker reminded people to be careful when operating electrical machines.

(This article is not a true story. It was written to be used as a teaching aid in a lesson)

CHART # 1

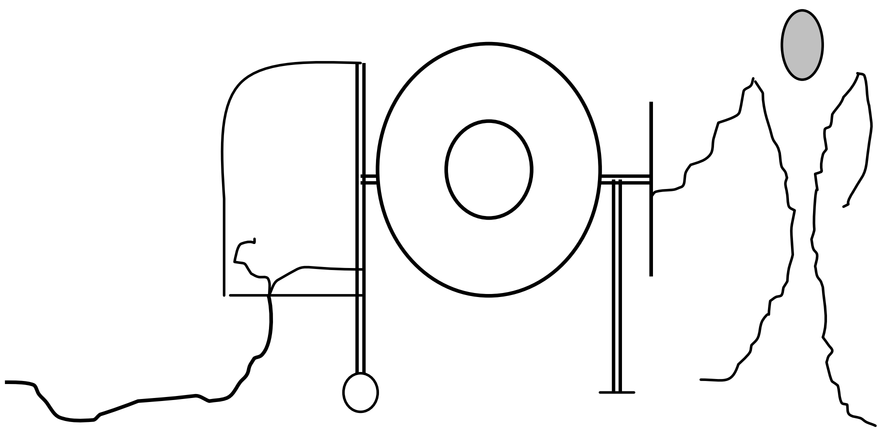

Department	Trade	Subject: Theory	Topic: danger through electricity	Date

DANGER THROUGH ELECTRICITY

Electricity is helpful in various trades. It makes machines run and gives light.

But accidents can happen when: - machines are faulty - cables are faulty - people are careless	When someone gets an electrical shock, currency flows through the body and injures the person. 	There are many consequences of an accident: - for the person: he / she can seriously be injured or even die - for the family: it looses manpower and income - for the company: it looses an employee and cannot finish the job

Safety Regulations

1. Check mashines before using it!
2. Check wires for faults!
3. Never consume alcohol during working hours!

ALWAYS BE CAREFUL!

Preparation: showing chart # 1: electrical shock. Question: please comment this chart, or: what happens to this person? Who has ever had an accident? 5 min.

Objectives (1-3)	Presentation	Method/ T.- aids	Check-up	Time
Trainees should be able to enumerate three sources for accidents with electricity (1)	Instructor reads an article (fake-article) from the Daily Graphic about accidents at the workplace. Trainees shall listen and were ask questions: 1. Did you watch any accident at the workplace before? 2. How many people were involved in accidents in this article? 3. How did these accidents happen?	Developing way - Newspaper article	What were the reasons for the accidents mentioned in the newspaper?	5 min.
Trainees should be able to explain the electrical shock (2)	Instructor shows two cables to the class. One is all right, one is faulty. Trainees can see that the rubber is spoiled and the wire is free. Questions: - Which of the cables would you prefer? - Why would you prefer this one? What would happen if you got in contact with that wire (faulty) and it was connected to the socket?	Developing way - new cable faulty cable	Why do electricians use fuses?	5 min.
Trainees are willing to argue for work-place safety (3)	Class will be divided into three groups. They were given the following task: An accident has many consequences. Try to find out what consequences there are: 1. For the person, 2. For the family, 3. For the company. Discuss it within the group and take it down on the zopp-cards.	Discovering way Group work - zopp-cards - markers, pins	Please comment on these statements	15 min.
Application.	Let's figure out some safety regulations. Instructor writes results on the blackboard			10 min.
Final check-up	Question: Why can even somebody's family be afflicted by an accident through electricity?			5 min.

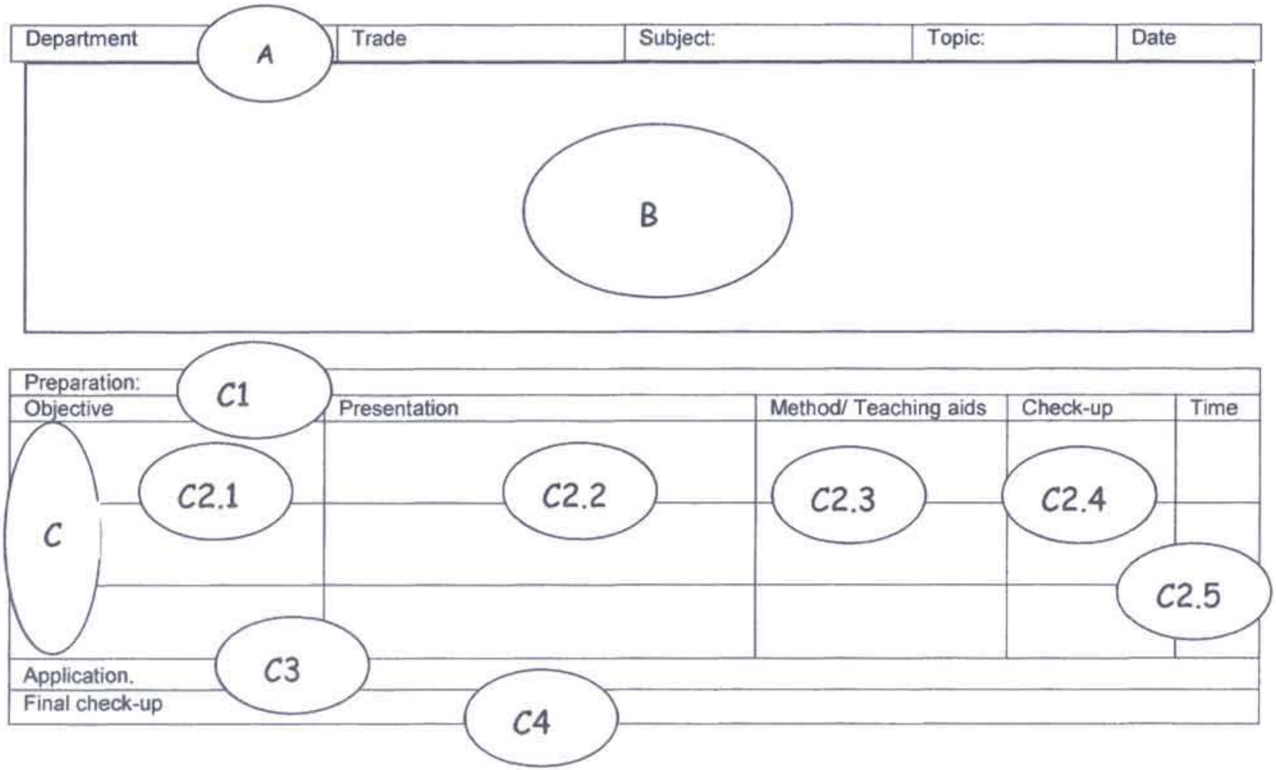
Department
Trade
Subject:
Topic:
Date
A
B
Preparation:
Objective
Presentation
Method/ Teaching aids
Check-up
Time
C1
C
C2.1
C2.2
C2.3
C2.4
C2.5
Application.
Final check-up
C3
C4

4 Lesson Preparation

A good lesson preparation is everything, a bad one is nothing. A sound planning takes a long time and a lot of work. But once done, it will serve you for a long period and make your teaching easy. A well-styled lesson will arouse the interest of the students. This prevents disciplinary problems in the classroom and raises the amount of items learnt. An instructor can even spontaneously run the lesson e.g. when called to replace a sick colleague. A lesson preparation is a very comprehensive task. It requires farsightedness because this lesson plan will be the foundation for testing at the end of a period. The objectives, the check-ups and the blackboard notes can be very useful when composing any trade test or other test. It gives the trainer the guarantee that the questions are at an adequate level so that trainees will not be overtaxed or feel treated unjustly. The following chapters shall assist instructors with the lesson preparation and show why it is necessary to have one.

4.1 Principles for Effective Lesson Planning

A lesson should follow various rules. The most important thing is that a lesson has to be structured. The importance of structure was already explained in the part about educational psychology. A fix scheme for a lesson has various advantages for trainees, as well as for instructors.

A fix structure gives the trainees a feeling of safety and the possibility for orientation. It is the wish of every instructor that the trainees follow the lessons. This is however not always the case. No person can always concentrate the way the teacher expects. Various thoughts might be in a trainee’s mind which an instructor will never find out, but might be important for a trainee. It can be problems within the family any other trouble, or the trainees might just be thinking of their girl / boyfriend.

This has nothing to do with the teacher him/herself but is a normal and natural thing. Even if a trainee did not listen for a while, he / she would be able to follow the teacher's intention. This will at least help to keep up the motivation.

To organise a lesson also means, that the instructor progresses gradually. The new knowledge is arranged in logical units. In this way the trainee can easily understand it, because it allows him to process this new information. He will be able to add unknown facts to familiar ones and so upgrade his knowledge step by step. According to Educational Psychology, this method helps to improve the learning process and raises the quantity of remembered items.

The division of the lesson into several small units allows the instructor to check his own efforts. Furthermore it enables him/her to check step by step whether the trainees are following or not. This will enable the teacher to change the strategy, where necessary. Basic knowledge has to come before specific knowledge. Only when the basic knowledge is there - and of course understood, does it make sense to go on. One cannot do step two before step one. Detecting that trainees did not get the message at the end of the lesson is too late. But discovering lack of knowledge after a short sequence allows the teacher to repeat or explain in detail to be sure that he can proceed with the next step. However, arranging a lesson this way has some difficulties too.

There is no common scheme that is best for every lesson. What is introduced with the lesson format is one way. Within a teacher's life he or she may change the strategy several times and try new ideas. Instructors as well as students are individuals. What is suitable for one is not necessarily convenient for somebody else. Everybody will once develop his own scheme for a lesson. But for the beginning, experience has shown that the format used in this course provides a good guideline.

The order cannot be kept in every situation. This will depend on the subject being taught. Some educationists argue that a fix lesson scheme may make the lesson boring. They say that a schema does not allow for variation. Teachers might not be able to react to trainees' interests that may come up while teaching and this may limit the instructor's creativity. This will however depend on the experience of the instructor. New instructors might have more problems of this nature. One should remember that a lesson scheme is not a recipe that guarantees good performance but should be seen as help for teachers to organise their work. The 4-Step-Method can therefore be described as a reasonable foundation for the success of theoretical lessons in vocational training.

When organising and preparing a lesson, there are several principles that should be considered.

The Principle of structure

This principle can also be called the "central thread". To structure knowledge means to split it into logical units. This enables the students to understand easily. Teaching matters of this type can also be learnt and remembered easily. The trainees are furthermore educated to identify new problems and solve them. It supports a holistic education for problem-solving. Unstructured knowledge on the other hand is harder to learn and easier to forget. Pedagogues refer to unstructured

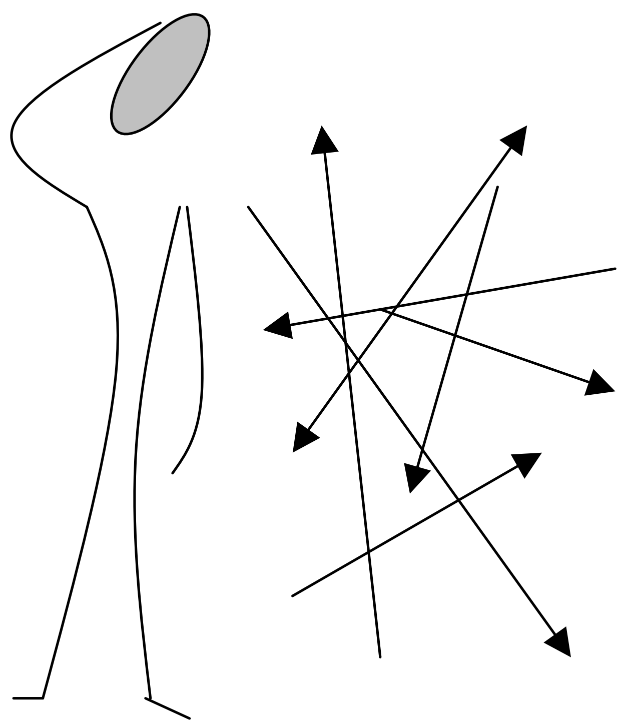

knowledge as isolated knowledge. As we learnt in an earlier chapter, it is difficult to get this type of information into the long-term memory. Whereas facts being included in a logical relation to others are "very resistant against forgetting" (Skowronek).

Some ideas which might help to realise the principle:

- show how the new issues are connected

During the lesson trainees get quite a good perception about how big the consequences of an accident can be and the fact that it could happen to them as well. It is nothing that happens only to other people. Everybody is confronted with electricity almost every day.

- Explain the connection with other situations

The danger through electricity is not only existent at the workplace. Many people have to work on sites or in other people's homes, where it is not always possible to check machines. It is not everybody who is aware of the possible dangers. Wherever trainees come into contact with electricity there is an invisible danger.

- Explain the aim of the lesson

The aim of the lesson is to prevent the trainees from being injured. Besides the trainee, a lot more people are affected by any injuries. If there was enough time, a role-play can be exhibited. The classroom is the place where a trainee got an electrical shock. What has to be done? The person might be taken to hospital – there you have costs from the treatment; doctors and nurses have additional work and so on.

- Arrange the data clearly

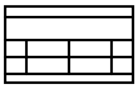

It can easily be seen from the blackboard that there are five units of information. The heading and subheading that give an overview of the topic. Below are various reasons why accidents happen. In the middle, students get an explanation on what happens when somebody gets an electrical shock. In a next block they are informed about the far-reaching consequences an accident can have. The very right unit shows how to behave to avoid a disaster.

"Isolated knowledge is dead knowledge" (Brunnhuber)

The Principle of comprehensibility

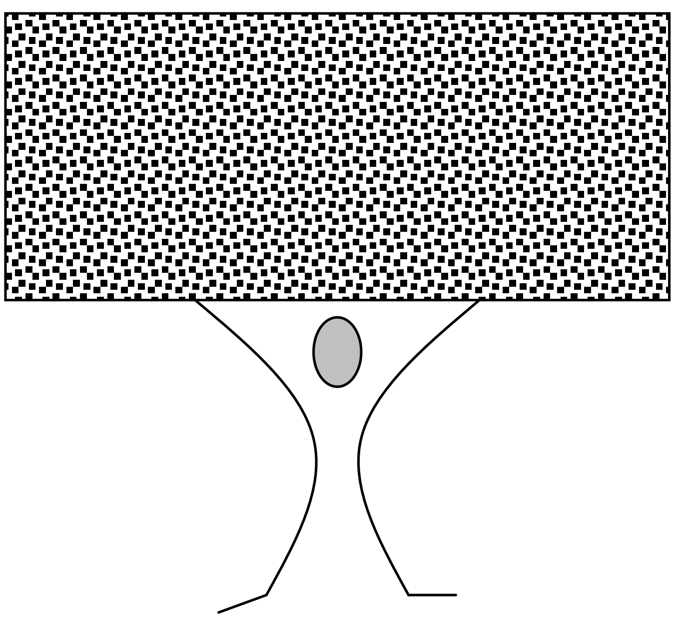

Most of the information is new to the trainees. Instructors have a higher level of knowledge than trainees. So they have to prepare the subject matter to the level of the trainees so that they are able to understand. Do not feed students with irrelevant information. Reduce it to what is necessary for every individual.

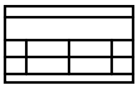

The definition of electricity is very clearly presented. It is not a technical definition but sufficient for a trainee in the field of e.g. dressmaking. It is for sure not sufficient for an electrician. This person should know a lot more about electricity. In our example the lesson is about an electrical shock. So there is no need for a more detailed explanation of electricity. Regarding the "electrical shock" itself, trainees learn that currents flow through the human body. This is what everybody will understand and what is at the level of a mason. It was not sufficient if you would teach nurses or even doctors. They have to have a much wider knowledge of an electrical shock. Always bear in mind, whom you are teaching!
You get more information about this issue in the chapter "Didactic Reduction".

The Principle of Science-Orientation

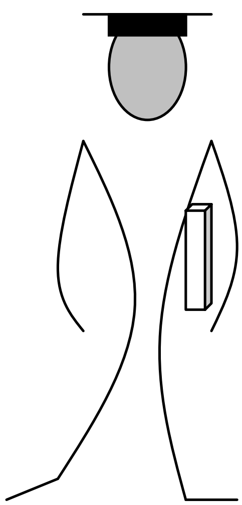

When planning a lesson the instructor has to check whether the subject matter is on the actual level of scientific research. Whatever the trainer teaches must not be inconsistent with any commonly accepted knowledge and has to be in harmony with the actual level of research. The last century brought plenty of new technology. New products and techniques flooded the market. The best example for this development is the information technology. About 25 years ago the size of a computer filled one complete room of a house. Today a computer or Laptop can even fit in a briefcase and has much more capacity than the ones of "the first generation". The processors become faster so rapidly that one can scarcely purchase software for a ten-year-old computer. Thanks goodness, the development does not go that fast in all our trades. But even there machine-technology keeps improving. An instructor should always try to have new information, to let trainees know that the master is up-to-date and so is their apprenticeship.

Dangers through electricity are the same as they were in the past. Electricity is used in more and more areas of our lives and especially our work. Craftsmen use electrical machines more frequently than in the former times. Therefore, the dangers through electricity will rise in the future.
An example out of the technical division shall be given too:
There are various methods of avoiding electrical shocks. In former times it was mostly fuses that were used. Nowadays electricians use the "circuit-breaker" in addition. It is a new technology that is easier to handle and more comfortable for the user. Nevertheless the fuses are still in use. Both safety precautions have advantages and disadvantages. An instructor of the electrical department who only explains the purpose of fuses and does not teach the circuit-breaker is not teaching at the current level of technological standard. As the application of this technology is very common now, it has to be part of the syllabus.

If instructors do not follow this principle it would lead to outdated explanations and instructors might lose the respect or confidence of the trainees!

The Principle of Practice-Orientation

The situation during apprenticeship is different from the one that the trainees will face later. Whether they are employees or self-employed, the tasks will be unlike those they have in the Vocational Schools. The purpose of Vocational Training is to prepare the students for their life as craftsmen. Outside the Training Centres work might be arranged in

another way. Some facilities that were available in the Centre will not be there later on. A trainee might not have the possibility to practice with other facilities during his training time. People in other areas might have opposite tastes and wishes, so that products are not the same. The houses in the North of Ghana are different from those in the South. So it is with the dress.
Instructors should be aware that the trainees may move across the whole country in search of employment. This has to be considered when planning a lesson and through the entire teaching period. Always check whether the subject matter is close to reality that is the situation the trainee will be confronted with after his trade test examination. Make sure that things do not look too theoretically.

The Principle of Goal-Orientation

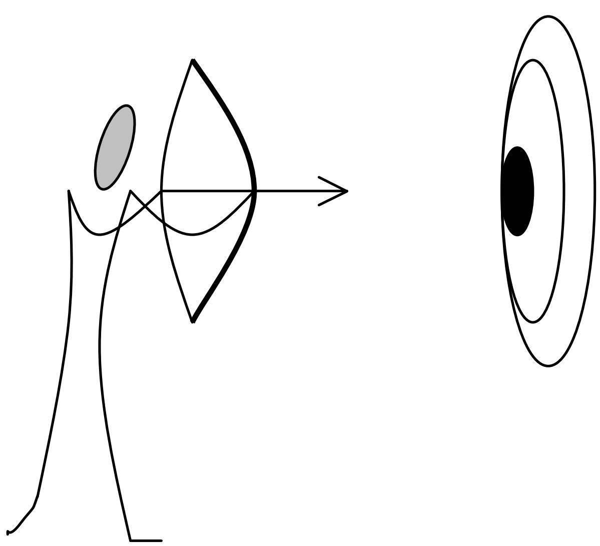

"One who does not exactly know where he wants to go to, must not wonder when he arrives at an unexpected destination" ***(Mager)***

"Goal-orientation" is something everybody is talking about. There is no company, no organisation which does not have a workshop for "goal oriented project planning" within the last years. World-wide hundreds of consultants are running seminars on this topic. What is convenient for the industry is convenient for the Vocational Training too. Not only in recent time when this topic became attractive for the economy, but for long time, it was a foundation in the education sector. Goals guide the trainee as well as the teacher. In Vocational Education these goals are called objectives. They describe the expected behaviour of the trainee after having gone through the learning process. The question the instructor should ask himself is no longer WHAT should be taught, but WHY should something be taught. A trainee will learn a new theme easier when its purpose is obvious for him. When planning classes always ask yourself: "Why should a trainee learn this?"

In our example it is very obviously why the lesson is about danger through electricity. The instructor wants to protect trainees against injuries. So he informs them about the sources of danger, the consequences and how to avoid accidents.

The chapter about objective setting will provide more details on how to realise this principle.

The principle of check-up

This is very closely related to the principle of structure. The contents of the lesson should always make it possible for the instructor to get a feed-back, for him to know, whether he can continue with the matter or not. As we already heard it is not useful to go on, when basic knowledge is not understood. "Check-up" is a comprehensive section and will be treated in more detailed in chapter 10.

Our lesson plan has an extra column for this purpose (C4). It is arranged in such a way that after every teaching objective a short analysis in the form of a question, discussion or any other type of evaluation will reveal whether the students did understand or did not.
"What other types of accidents can happen" urges the trainees to think about what they heard and to look for other dangers. When trainees are able to respond to "Why do electricians use fuses" it is clear that they know about the electrical shock. A trainee can only argue for safety regulations when he / she

knows about the significance or consequences of an accident with electricity.

4.2 Objective setting

To do justice to the principle of goal-orientation, objectives are used for the lesson planning. The instructor states clearly what he wants to achieve and what he expects trainees to achieve or produce at the end of the period. This is stated in terms of observable or measurable behaviour. Objectives are not just helpful, but obligatory. They describe the trainee's behaviour or abilities after passing a lesson successfully.

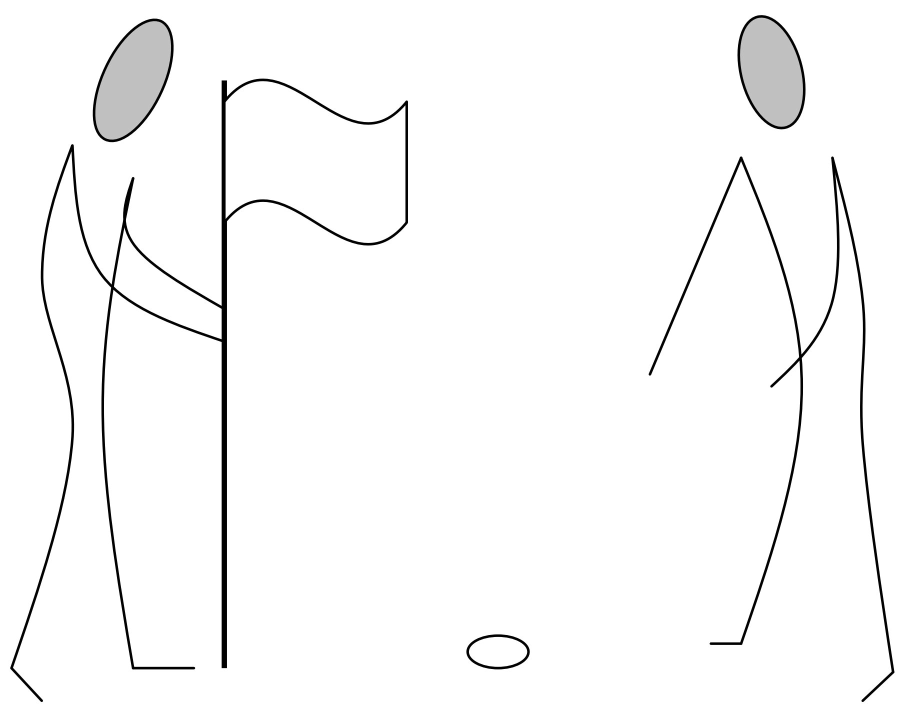

Importance of objectives for the instructor:

- objectives enable us plan thoroughly. It also helps the trainer to choose the appropriate "tools" to reach a precise aim. The right choice of the method or the preparation of teaching aids will also be easier when a certain goal is set.

The presentation-step of the first objective (instructor reads…) particularly tries to cope with the first objective, that trainees should be able to enumerate three sources of accidents through electricity.

- *objectives allow an easy check-up*
  a gradual teaching method makes it easier to review the effectiveness of teaching. Small steps are easier to check than complex matters. It helps to make corrections or additional information in time.

Check-up questions are foreseen after every step

- *objectives are the basis for a teacher's self-control*
  After check-up the trainer is able to estimate the feed-back. Getting a positive feed-back will tell the instructor that things went well. Negative feedback reveals that trainees did not understand what was taught. Therefore it is up to the instructor to find out why the trainees did not understand. To look for an explanation may cover the following questions:

  ☞ Was the teaching matter too comprehensive?
  ☞ Was the teaching matter too complicated (above trainee's level)?
  ☞ Did I use the right methods?
  ☞ Did I follow my lesson plan?

Importance of objectives for the trainees:

- *Trainees get a clear perception.*

A manageable amount of new information transmits a feeling of comfort. Trainees don't feel overloaded and gain self-consciousness because the facts can be processed easily.

- *Trainees are able to control themselves.*
  What goes for the instructor goes for the trainee too. They learn to estimate themselves, their abilities and the progress they have made in learning. He can prove on his own, whether he was only mentally absent or he wasn't adequately prepared or the teaching matter was too difficult for him. A necessary change in behaviour can only be reached, when the cause is obvious.

Types of objectives

There are several types of objectives. Within this course we will concentrate on two: the general objectives and the specific objectives.

General objectives

It can simply be named as the goal of the lesson. It represents the answer to the questions every teacher should ask himself when planning a class:

☞ "Why am I running this lesson?" or "What is the purpose of my efforts for this lesson?"

☞ "Which new behaviour do I expect from trainees after this lesson?"

The general objective is that the students are aware of the dangers and act accordingly.
The answers to the above mentioned questions out of our example are as follows:

1. The instructor wants to protect trainees against injuries and their consequences,
2. The instructor wants the trainees to be careful when operating electrical machines.

Specific objectives

These can be called targets within the general objective which one intends to achieve at a particular period. The specific objectives direct us through a lesson. When we talk about objectives in the subsequent paragraphs we mean specific objectives.

The classification of objectives

"Objective-taxonomy" is the expression used by the pedagogues. It demonstrates the domain the objectives can be related to. It deals with the question, how intensive trainees should be trained in a particular subject. The cognitive domain covers the field of understanding, thinking and knowledge. The affective domain deals with the attitude while the psycho-motor goes with physical action. While these three can be found even in old literature, the social scope is a quite recent addition to the taxonomy. It has been added because the social behaviour gains more and more importance in the daily working routine.
The higher the level within a scope of the classification, the more detailed and intensive the subject matter has to be considered during class. The classification is shown in the following chart.

4.3 Objective-Taxonomy

Scope	*Cognitive*	*Affective*	*Psycho-motor*	*Social*
Matter	Information and Knowledge	Attitude, Emotions and Values	Skills	Behaviour
Hierarchy	Knowledge Comprehension Application Analysis Synthesis Evaluation	Receiving Responding Valuing Organising Value concept	Imitation Manipulation Accuracy Organisation Control	Individual Partnership Group
Example	To interpret a chart	To have fun in maths	To use a plane	To work co-operative within a group
Verbs	Enumerate, allocate, distinguish, reduce…	Like, welcome, take pleasure from, enjoy…	Prepare, use, manufacture, construct…	Co-operate, help, share…

The cognitive domain

The cognitive domain is concerned largely with information and knowledge. It is based on a continuum ranging from mere knowledge of facts to the intellectual process of evaluation. Each category within the domain is assumed to include behaviour at the lower levels. There are six major categories within this domain.

Increasing level of complexity according to BLOOM:

1. *Knowledge*: This is based on recall and methods of dealing with recalled information.

2. *Comprehension*: This is the ability to grasp the meaning of material. It embraces 'translation' from one form to another (e.g. words to numbers),'interpretation' (e.g. explaining, summarising), extrapolation (e.g. predicting effect, consequences).
3. *Application*: This involves the ability to utilise learned material in new situations. It necessitates the application of principles, theories, rules, etc.
4. *Analysis*: This involves the ability to break down learned material into component parts so that organisational structure is made clear. The analysis of relationships and identification of the parts of the whole is vital.
5. *Synthesis*: This refers to the ability to combine separate elements so as to form a new whole. Deduction and other aspects of thought are involved.
6. *Evaluation*: This concerns the ability to judge the value of material. Such judgements are being based on definite criteria.

Trainees should be able to enumerate three sources of accidents with electricity. This is the lowest level, meaning that the students just have to repeat things they have learnt before. It does not include an attitude.

The affective domain

The affective domain relates to attitudes, emotions and values. It is attitudinal in concept and ranges very widely from heeding the simple reception of stimuli to the complex ability to characterise by the use of value concepts. There are five major categories within the domain.

Increasing level of internalisation according to KRATHWOL:

1. *Receiving*: This involves attending e.g. heeding messages or other stimuli. Awareness and willingness to controlled attention are subsumed under this heading.
2. *Responding*: This involves the arousal of curiosity and the acceptance of responsibility in relation to response.
3. *Valuing*: This involves recognition of the intrinsic worth of a situation, so that motivation is heightened and beliefs emerge.
4. *Organising and conceptualising*: This involves the patterning of responses on the basis of investigation of attitudes and values.
5. *Characterising by value or value concept*: This involves the ability to see as coherent matters involving ideas, attitudes and beliefs.

Trainees who are willing to argue for safety regulations, belong to the 3rd level. They have more than the ability to do something, they have an intrinsic motivation to do it.

The psychomotor domain

The psycho-motor domain involves muscular and motor skills.

Increasing level of Co-ordination according to DAVE:

1. *Imitation*: These are the involuntary motor responses to stimuli. They are the basis for all types of behaviour involving bodily movement.
2. *Manipulation*: These are the inherent movement patterns built upon simple reflex movements and are the result of instructions.
3. *Accuracy*: The interpretation of stimuli so that they can be adjusted to the environment.
4. *Organisation*: The co-ordination of various movements to harmonious, complex activity.
5. *Control*: The operation becomes routine and an automatism. The movements look aesthetic.

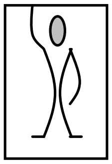

Take one of your lesson preparations and try to figure out which categories your objectives cover.

It isn't always possible to make this distinctive differentiation. This is theoretical in nature. Human behaviour is holistic and cannot be split up. A lot of objectives contain parts of every sector. In addition to this taxonomy there are some more types of classifications, which would surely confuse us than to give a clear perception. For our further studies we will concentrate on the four "levels of demand". They too mark the intensity a subject shall be taught. To fix each level, particular verbs are used for formulating the objectives. See following chart:

Levels of Demand

Level 4: Problem-solving

Propose, suggest, create, consider,

Level 3: Transfer

Discern, derive, use, compare, argue, transfer, assign,

Level 2: Reorganisation

Explain, describe, recognise, detect, discover, observe…

Level 1: Reproduction

Repeat, enumerate, measure, report, mention, list, number…

The level usually will be chosen to the required abilities according to the syllabi. Most of the syllabi used in the country do not co-operate
As a result it is the duty of the trainers, to decide which level to aim at. The masters should know which competencies have to be emphasised. It might be helpful to look at the trade test examinations. Since students are trained to pass the exams they might give a guideline for teaching level too.

The trade test examination for dressmakers asks for an explanation on why an iron can cause an electrical shock. The answer is: When the wire connections are faulty within the iron, the currents will be on the chassis too. If somebody touches it, he / she would get an electrical shock.
To give this answer, the level that is chosen in our example would not be enough. "Trainees should be able to enumerate three sources for accidents with electricity" only demands, that the students are able to mention several sources, but not to explain them.

Find out to which level the specific objectives of the given example belong! Formulate the first objective so that it represents a higher level!

An additional example shall explain the level of demand more intensively.
There were three classes of the car mechanic trade. The lesson was about *types of cars*, but the level of demand was different.

In the first class the objective was on the first level, REPRODUCTION: *At the end of the lesson the trainees should be able to enumerate two types of cars*.
The teacher asks: Name two types of cars! The objective is reached, when the trainee can answer: "Mercedes-Benz and Daewoo Tico."

In the second class the objective was on the second level, REORGANISATION: *At the end of the lesson the trainees are able to describe two types of cars.* To reach the objective it is no longer sufficient for the trainee to say Mercedes-Benz and Daewoo Tico. On this level he must be able to describe it. For e.g. there are Mercedes-Benz and Daewoo Tico. The Mercedes is a big car with a lot of space whereas the Daewoo Tico is a small car with little space for loading.

In the third class, the objective was on the fourth level, Problem-solving: *At the end of the lesson trainees should be able to advise somebody on the type of car to buy*. At this level, even the previous knowledge of the second class is no more sufficient. To advise somebody requires more knowledge than to know something about the size of a car. To fulfil the objective a trainee must know more, e.g.: the Mercedes is a big and strong car, but is expensive too. It has lot of space and is very convenient for long travels. If you want to use the car mainly for the city, you might better buy a Daewoo Tico, which is small and easy to handle in small streets. The Tico is also much cheaper than a Mercedes-Benz.
Trainees who were in class one could not advise somebody, because the teaching was on a much lower level.

Rules for objective setting according to DUBS

Objectives usually should follow certain criteria. The features are as follows: A certain behaviour that is observable after the lesson, the circumstances under which this behaviour takes place and an assessment level. To reach this, teachers make use of the so-called SMART norm:

S	=	specific
M	=	measurable
A	=	attainable
R	=	realistic
T	=	time bound

The first objective in our example should therefore look like this: *"Trainees should be able to enumerate three sources of accidents with electricity by heart within one minute"*. It is not like this in our example. Nowadays the circumstances under which the behaviour takes place has lost its importance and the time bound aspect is commonly given by the time planning within a lesson. So the objective is reduced to what is stated in the lesson plan:

"Trainees should be able to enumerate three sources of accidents with electricity"

Rule 1:

Objectives are characterised by two components: the behaviour and the contents.

BEHAVIOUR	CONTENTS
Trainee is able to enumerate	three sources of accidents with electricity

In several situations it was observed that trainers just noticed "enumeration" as objective. This is not a meaningful objective at all.

The contents component is missing thus making it absolutely useless. The same goes for the other side. "Accidents with electricity": the behaviour component is missing. Consequently it is useless too. To have a useful objective it has to look like shown above.

Rule 2:

Use *expressive* verbs exclusively to formulate an objective!

There are expressive verbs that are useful and inexpressive verbs that are useless to describe the desired behaviour of a student.

Useless (inexpressive) verbs	*Useful (expressive) verbs*
To know, understand, comprehend…	To enumerate, explain, distinguish…

A general example shall illustrate the use of the verb "to know":
"Almost everybody knows BILL CLINTON". But what does it really mean, to know Bill Clinton? Some of us will say, that he is the president of the USA. The president of Ghana may answer: "He is my American colleague". Others will say, he is an American Politician and so on. But this is not the end: His wife might say: "Nobody knows him really, except me!" His doctor might say, "I know him absolutely" and perhaps he does better than his wife. Probably he is considering his health.
To get to a common answer at level 1, "REPRODUCTION", we use an expressive verb for our objective, namely recognise.
"Almost everybody recognises Bill Clinton". Showing a picture on which he is among several other people, leads to a collective result. His wife, his friends, his doctor, everyone will point at him and say: "This is Bill Clinton."

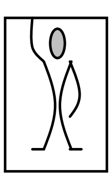

Which answers could be given if our second objective was like this: “Trainees know an electrical shock”?

Rule 3:

The behaviour shall be *measurable* or at least *observable*.

In the beginning the importance of the principle “check-up” was expressed. The groundwork for it has to be done within the objectives. The preceding example pointed out how difficult check-up can become, when e.g. using inexpressive verbs. Some objectives will be measurable, some will be observable.

Our first objective is accurate measurable: The aim is reached, when the students are able to mention three dangers (It is countable!)

The second one is observable: The aim is reached when a trainee is able to give a satisfying explanation of an electrical shock, according to the explanation that was given in the class. It is not countable but provable.

Rule 4:

Avoid comprehensive statements!

Comprehensive statements allow comprehensive answers. The more precise a statement is, the easier it is to answer. To convert our first objective to a comprehensive one would lead to the following outcome: “Trainees should be able to enumerate the most important sources of accidents”. Although an expressive verb is used, the answers can be of various types: Accidents with cars, accidents with machines, accidents in sports and so on. What is important for the instructor is not necessarily important for the students. Students may put emphasis on other areas.

Rule 5:

The used verbs shall represent the desired level!

Examples for these verbs are given in the chart above: "The levels of demand".

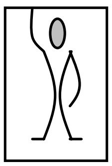

Try to replace the verbs in the example with verbs of the chart, by keeping the same level.

5 Didactic Reduction

Didactic is the science of teaching and learning. As the expression makes us assuming, something shall be reduced. Indeed, it is like this. What should be reduced is the teaching matter. This does not imply that it can be done arbitrary. Trainers have of course a wider and better knowledge than the trainees during their apprenticeship and even after it. Instructors have a lot more experience. This will sometimes lead to the situation where instructors teach on a level trainees do not understand. And in most situations the instructors don't even recognise it. For the instructors everything out of the trade is familiar. He is well-versed with

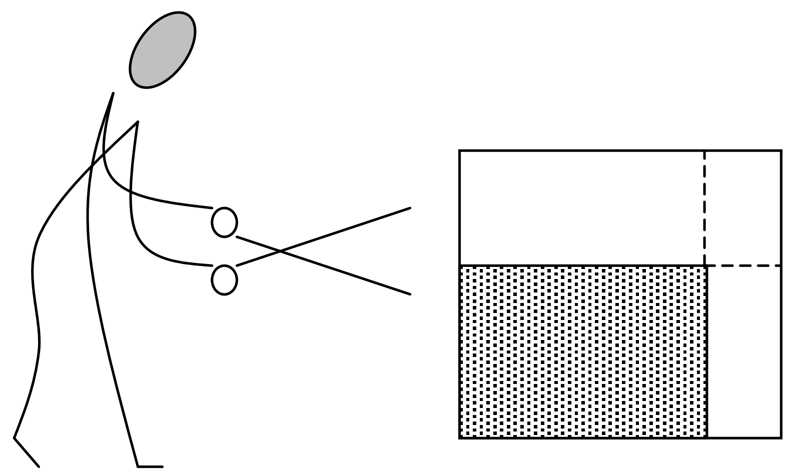

difficulties that might occur in "his field". But being an expert may lead to the situation that a problem is not identified as a problem. The trainer's daily routine is quite a new skill for the students. What is easily understandable for an instructor can be an insoluble task for the learner. The consequence for vocational education is the Didactic Reduction. The learning matter has to be reduced to the level of the students. These young people are in the class to learn a new trade. Sometimes it is coincidental for them to be, let us say, in a masonry class instead of a carpentry class. Maybe it was the only profession that a Vocational Training Institution offered. In the beginning most are absolutely newcomers without any previous knowledge of the trade. We therefore have to approach teaching slowly. Today there is a common saying: LESS IS MORE. What people want to express is that sometimes it is more helpful to teach only a small part, but to do it properly than to try and cover everything and drift off. It is not always advisable to have too many irons in the fire. We should train them very well but bear in mind that within the time of their apprenticeship students will hardly reach the masters level. So there will always be a professional distance between trainer and trainee. The need for Didactic Reduction is present all the time. We have two types of Didactic Reduction: The *Vertical Didactic Reduction* and the *Horizontal Didactic Reduction*.

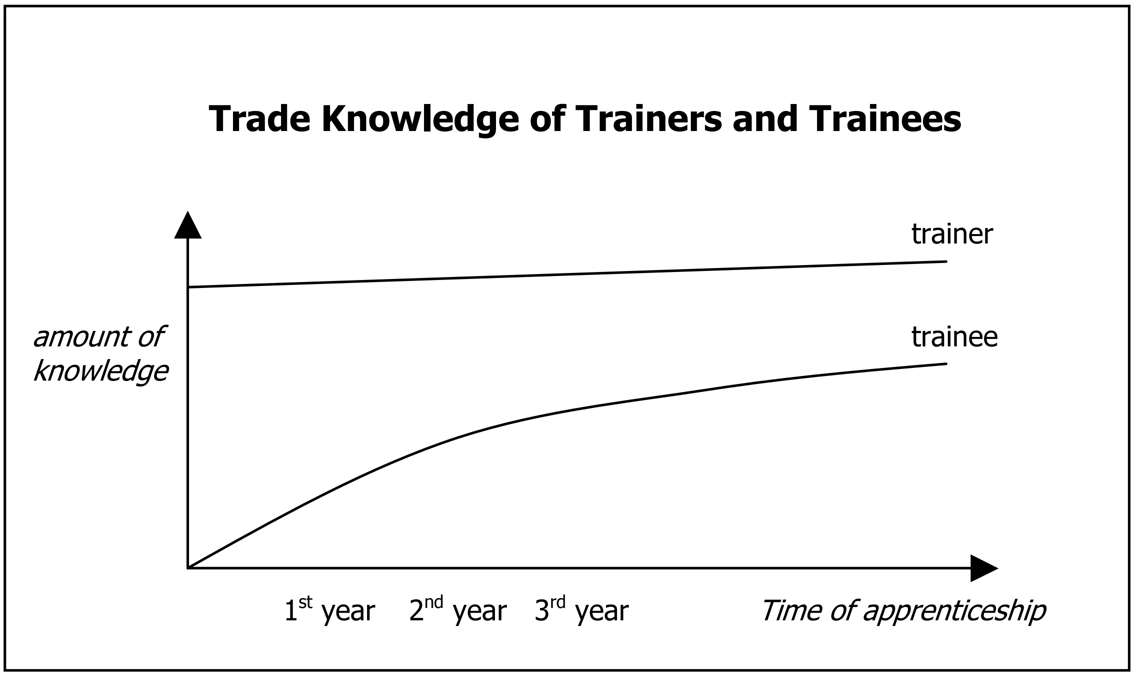

5.1 *Vertical Didactic Reduction*

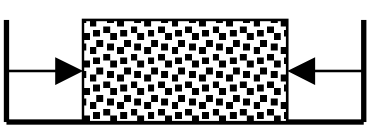

The quantity of the teaching matter will be reduced.

Vertical Didactic Reduction wants to prevent a situation where the students are overloaded with information.

Not everything that belongs to the subject matter is really important for the trainee to know. Too much information will rather lead to confusion than to clear perception, as it was mentioned earlier already.

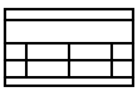

"Danger through electricity" is a wide field. Vertical Didactic Reduction requires that we leave out some aspects. What was left out is that there are many dangers with electricity: short circuits can cause fire; this has already devastated whole cities in history. Accidents can happen through faulty power-lines. There are several other consequences of an accident: at least the whole social system of a nation will be burdened. And it is not only the safety regulations that guard us: In the technical field there are many types of protections. There are fuses and circuit breakers as we already learnt, electricians apply the techniques of "earthing" and some more are used in the power plants.
All this information was left out. The idea is to protect the trainees against accidents in the workplace. For this purpose the amount of information that was given is sufficient.

5.2 *Horizontal Didactic Reduction*

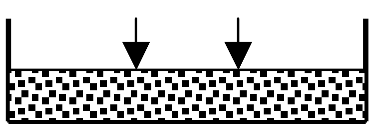

The level of the teaching matter will be lowered.

Horizontal Didactic Reduction wants to prevent the students from being overtaxed with difficult facts.

Two aspects of the lesson shall be spotlighted here. The first is the electrical shock. The explanation for the trainees is very easy: When someone gets an electrical shock, currency flows through the body and injures the person. A doctor would certainly tell us that this interpretation is very primitive even if he does consider it as an interpretation at all. What goes on while a person is connected to a power source is very complicated. Books are written about the procedures within the body and the brain. But all this does not help us in our lesson. Not at all! It would just confuse the students if not the master too. Our clarification is basic. To show what happens when someone gets a shock: if a person touched a faulty machine, the current of this machine would flow through his/her body. This is painful; it injures people and can even kill them. That's what is important for the students. If the trainees have further interest, they will ask. Even though only very few people will be able to answer.
The second aspect that will be highlighted is the *definition.*

6 Definitions

Scarcely one lesson in Vocational Education in Ghana does not begin with a definition. Even though the use of definitions is controversial, we take it as a matter of fact. But the definitions themselves are worth looking at it a bit closer. Many definitions which are in use in the vocational sector are just copied, word by word, out of the dictionary. It came out several times that indeed colleagues of the same trade were not able to repeat the

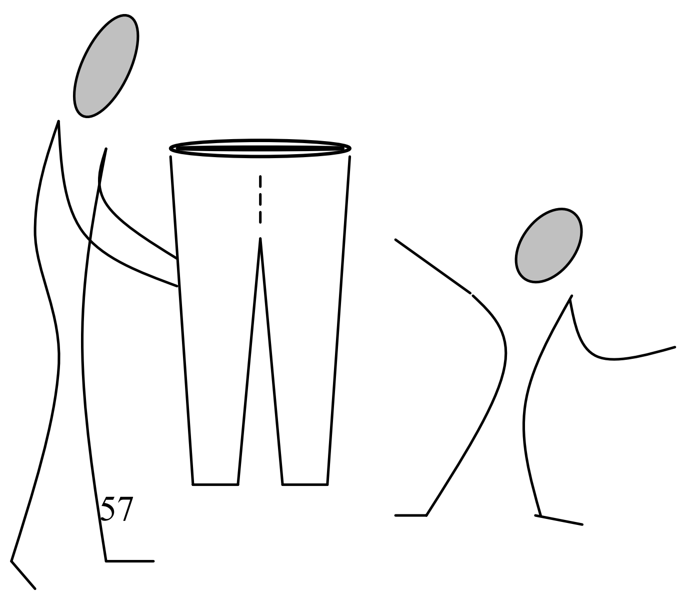

definition other instructors used. It happened sometimes that the trainers were not able to reproduce their own given definition. How can this happen? Definitions of the dictionary are universally valid. The encyclopaedia tries to explain the word itself. The writers of a dictionary do not address it to a particular group of people but to everybody. Consequently it has to be formulated in a way that it is suitable for many situations. The more aspects it covers, the more information it has to contain. At the end it becomes difficult to understand the definition. Instructors on the other hand have a big advantage. They know the receivers of their message so that they can adjust it accordingly. They can cut off all that is confusing or just not necessary for the students.

Definitions are commonly used to explain unknown things. People normally make use of a dictionary when they do not know the meaning of a word. Therefore we mustn't forget, that frequently the students know what the instructor is talking about, e.g. when speaking about electricity.

Our example is about electricity. The dictionary defines electricity as: "The energy which exists in a negative form in electrons and in positive form in protons, and also as a flowing current, usually of electrons / a supply of this energy to a household, etc., e.g. for heating and lighting / excitement, tension or expectation." Anticipating that instructors want to help trainees to learn a trade, what kind of help would it be, if we gave such a definition to the students. It has to be reduced to an understandable and helpful level as it is done in the example: "Electricity is helpful in various trades. It makes machines run and gives light." The definition is based on the question: "How can we benefit from electricity in our job?"

Another example that various trades like masons, painters, electricians and carpenters use shall demonstrate it additionally: It is about *scaffolding.* The dictionary gives us the following definition of scaffold:

"A framework of metal poles and planks used as a temporary platform from which building repair or construction is carried out." Primarily this definition is not adequate to most situations in Ghana, where plenty of scaffolds are made of wood. Secondarily there are several words used that might not exist in the trainees vocabulary: poles, planks, temporary. If this was the situation you would have to explain words of a definition that should explain an unknown matter! Isn't that completely contradictory? Can this really be helpful for a student? Hence a better definition should be found. As in the previous example a question can give support: "Why do craftsmen use a scaffold?" The answer is: "They use a scaffold when they have to work above men's height." This answer contains more or less the same information as the definition does, just simpler. The fact that it is only used for working means, that it will be removed after the job has been done. This includes the fact that it is a temporary construction. A definition in a lesson might therefore look like this: *A scaffold will be put up when work has to be done above men's height.*

Some questions may guide instructors when putting down a definition:

- ☞ What is the purpose of …?
- ☞ Why / where / when do we use …?
- ☞ How can … support our work?

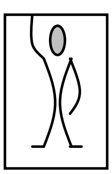

Ask one of your colleagues whether he / she is able to give you a particular definition of the trade by heart!
Take a definition from your lesson preparations and try to re-write it with the help given above!

7 Motivation

A simple exercise should stimulate us for this chapter. This practice was done in several workshops. But before continuing on the next page, do the exercise yourself:

You are supposed to go to a town you don't know very well to do a certain job. For your assistance you can choose one of the persons shown below, to join you. Give a statement, indicating whom of the two you prefer to accompany you. Furthermore justify why you want the person of your choice and why you refused the other person.

Mr. "A"

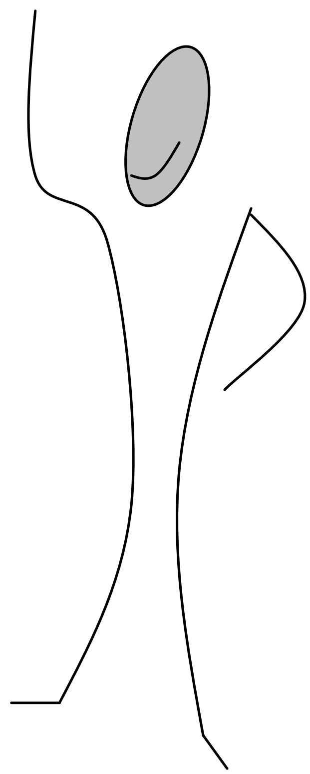

Mr. "B"

96 % of all participants expressed that they would like to travel with Mr. B. The instructors said that they took this decision because of the impressions the pictures made at them. They described the two persons as follows:

Mr. "A"	Mr. "B"
☞ someone who often gets drunk and cannot control himself and behaves improperly ☞ someone who could cause problems when travelling with him ☞ a person who was feeble and weak ☞ someone who was abnormal an could not reason properly ☞ a person who was lazy and could not assist you in any way ☞ someone who was aimless and good for nothing ☞ a person whom you cannot trust	☞ someone who was very brilliant or clever ☞ someone who was smart and active ☞ someone who was an energetic person ☞ a person who was enthusiastic ☞ someone who had an aim and could help ☞ a person who could solve problems when travelled with ☞ someone whom you can trust to bring you back when travelling with him ☞ a person who was friendly and entertaining

It is very interesting which impression was left behind from these two match-stick men. Summarising one can say that there was one main motive why most of the tested teachers wanted to go with " Mr. B". The picture gave the idea that "Mr. B" could be helpful to them and "Mr. A" could not. In a nutshell: "Mr. B" seemed to be motivated to go but "Mr. A" was not!

If simple match-stick men could impress people so highly, how would living person do then?

If trainees observe an instructor very well they will easily find out what the trainer's motives are or how motivated the teacher himself is!

8 Only a teacher who himself is motivated will be able to motivate trainees!

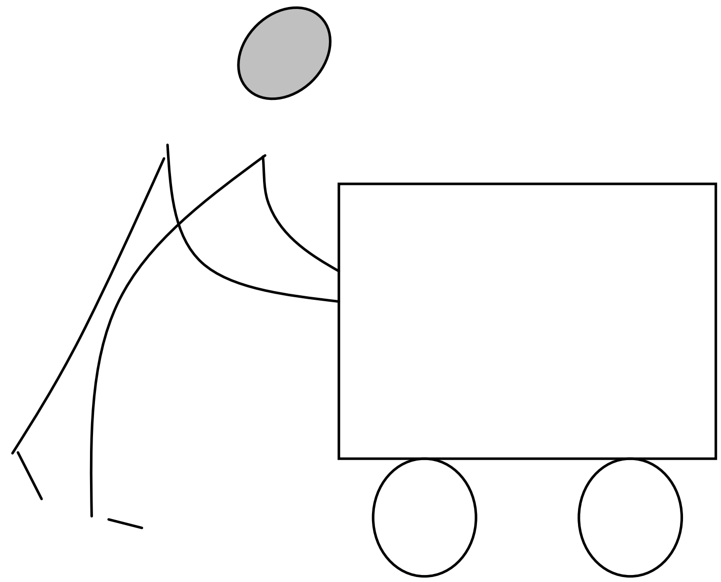

Even though motivation is not yet fully understood it is undisputed that the influence on human behaviour is immense, as the last exercise demonstrated clearly. Motivation is derived from the Latin word *movere* (= to move). It is the reason why people do things or not; especially whether we do things with pleasure or even enthusiasm or without any interest. Many scientists were and still are engaged in motivation research. Consequently there are many theories and thesis about motivation. Therefore only a short introduction shall be given before concentrating on the "motivation to achievement" according to *Atkinson*, which can be called the most relevant type of motivation for success in the learning process.

8.1 Various Motivation Theories (according to OTT)

The Need-oriented Conception

Basic needs are part of motivation. They all have in common that there is something missing like hunger and thirst. These situations lead to an action to redress the person's balance. When somebody is off balance, he/she always recognises the need and acts. This conception is adequate for our basic needs (hunger, sleep…) but it is not evident for the learning process.

The Incentives-Conception

The Greek Philosophy of Hedonism is the foundation for this conception. This philosophy says that a person's luck and goals are covered through the human being's desire for pleasure-seeking. To reach this a person will try to:
☞ avoid personal disadvantages
☞ gain personal advantages.
Consequently one tries to motivate a person in two different ways:
- Offering an attractive reward if the person takes a certain action
- Threatening somebody with punishment when he/she fails.

The differences at the individual level are huge and this makes it difficult to satisfy everyone. Usually it is money that is used as reward.

The Humanistic Conception

The central thread of this theory is the idea that a person's main motivation for all activities is the desire for a meaningful life. Several hypothesis became famous.

☞ *The MASLOW Theory*

He says that men are guided by two factors: deficit-motives and ambition for growth. First the deficit motives have do be satisfied and subsequently the growth gains importance. There is the Maslow-pyramid which shows the order in which the desires have to be satisfied. This means that the needs on level one have to be satisfied, before concentrating on level two, and so on. However, when one focuses on this pyramid, several discrepancies are conspicuous with

regard to the different cultures: The order in Ghana or Africa in general might be different from the one presented below. Furthermore, a precise incision between social needs and desire for safety is not easily possible in an African country because it usually goes together.
But even for western cultures, Maslow could only show problems but not give solutions.

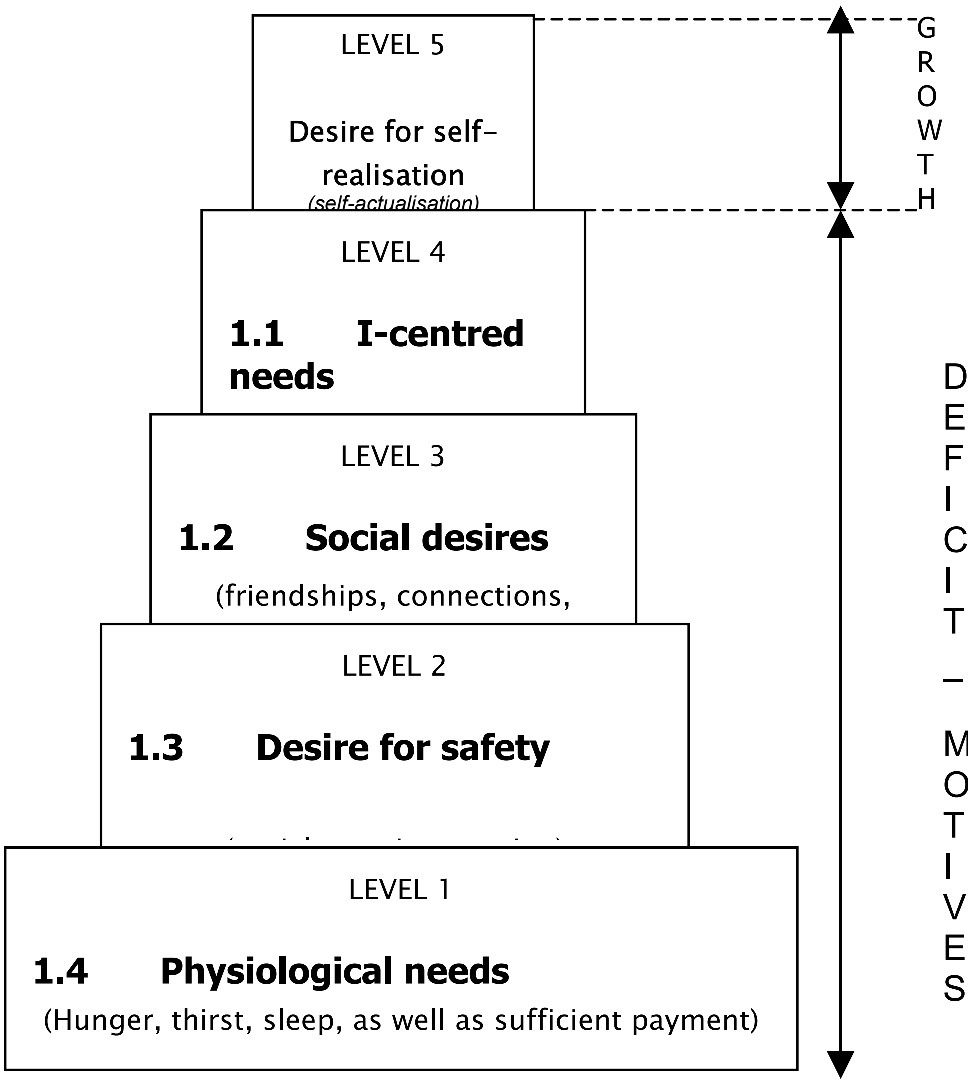

Maslow-pyramid, simplified

☞ *The theory of HERZBERG*

Herzberg called his theory “the two factors theory”. In a research he was looking for factors that influences the satisfaction at the workplace. He called them motivators. He called factors that lead to dissatisfaction at the workplace hygiene-factors. They are listed in the following chart.

Motivators	Hygiene -Factors
1. achievement success 2. acknowledgement 3. job-contents 4. responsibility 5. opportunities for promotion 6. opportunities for development	1. salary and status 2. inter-personal relations 3. management style 4. company policy 5. physical working conditions 6. job guarantee

The so-called Pittsburg study showed, that motivators and hygiene-factors operate independently of each other. Highlighting the two scopes we recognise that motivators relate to the work itself and can therefore be called intrinsic motivation whereas the hygiene-factors describe the circumstances and therefore can be called the extrinsic motivation.
Additionally, the study indicated that motivators were mainly responsible for satisfaction while the hygiene-factors are for dissatisfaction.
Even though some results might be controversial, it is significant that satisfaction at the workplace is not exclusively a consequence of a good salary. The job itself and the perspectives for the future are very important too. This shows how substantial the attitude of teachers and trainees is in vocational education.

☞ *MC GREGOR’s X-Y-theory*

Mc Gregor says that the type of instructor has big influence on the motivation of trainees. An authoritarian teacher has strict rules. He controls the teaching and does not allow much interaction of trainees. He is called the X-type, whose image of man is based on mistrust.

The Y-type's image of man is positive and defined by engagement and desire for self-realisation. This instructor has a co-operative style which gives room for trainees' activity and is motivating.
This thesis too is not a doctrine but shows that teaching exclusively in the "presenting way" (see chapter 11) is outdated.

The Cognitive Conception

It is based on the theory that people are naturally curious and want to achieve a certain aim. This goal can be called calculable, because e.g. an instructor can usually recognise the goal trainees have. This ability to estimate led to several motivational theories. A very important one for learning is the *motivation to achievement*.

8.2 Motivation to achievement (according to ATKINSON)

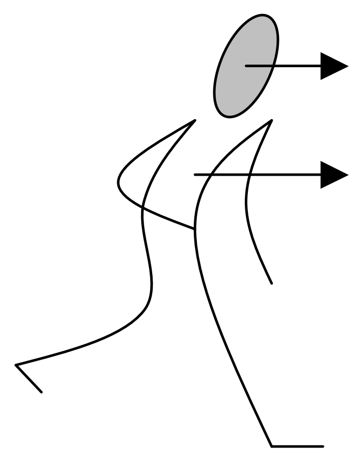

How intensively people work on the solution of a problem depends usually on two components: the *hope for success* and *the fear to fail*. This type of motivation is commonly known as the *intrinsic motivation*. This motivation is directly connected with the task itself. The first component of the intrinsic motivation leads to the result that people become proud after solving a task. Secondly they are ashamed when their efforts are fruitless. Intrinsic motivation can be considered as based on a natural curiosity.
There are three considerations which direct people when they want to be successful with a duty:

☞ the positive disposition of the person
☞ the subjective probability of being successful

☞ the incentive for being successful
Accordingly there are three considerations that direct people when they try to avoid a flop:

☞ the negative disposition of a person
☞ the subjective probability of being unsuccessful
☞ the incentive for failure

Combining both groups of considerations we will have a cumulated motivation for achievement:

When the hope for success is:	*And the fear to fail is:*	*Then the final motivation to achievement is:*
High	Low	High
High	High	Medium
Low	Low	Medium
Low	High	Low

This results lead to the final thesis: Persons are highly motivated to work on the solution of a problem, when the hope for success is higher than the fear to fail. However, even when the fear to fail is high, a high motivation to achievement can be existent, namely when an *extrinsic motivation* comes additionally. This type of motivation is called secondary or indirect motivation. It can

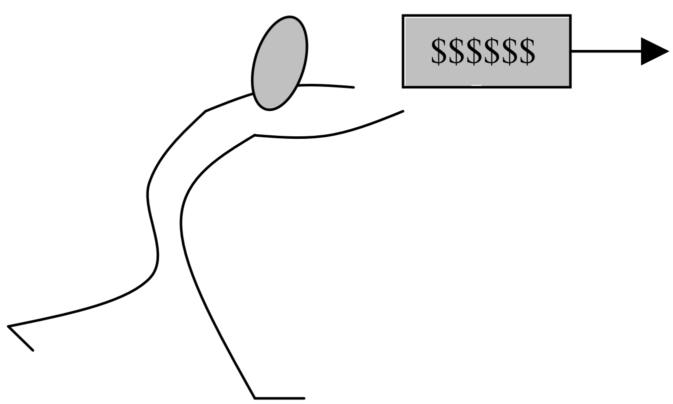

for e.g. be positive (by praise, good marks, or payment) as well as negative (by punishment, e.g. to stay longer or to do additional homework). They all are called *intensifier*.

The actual motivation to achievement is therefore the sum of intrinsic and extrinsic motivation:

Motivation to achievement =

Hope for success – fear to fail	+	reward / penalty
Intrinsic motivation		extrinsic motivation

In general one can say that learning is easier when the motivation is intrinsic. For a lesson it does mean that trainees must be given the possibility of active participation and the chance to have lots of success. Accordingly a lesson should have several achievable goals. However, one has to be careful. When the level of the task is too low and the solution is easily identified then there is no challenge and the effect of intrinsic motivation can be lost. A general level cannot be given but this always depends on the class, the students, the circumstances and the task itself. These facts have to be taken into consideration all the time. The same task might have different effects in different classes. An instructor should always be ready to adjust a problem to the actual situation in which it shall be used.
The effect of intrinsic and extrinsic motivation is obviously important for the learning process. Some tips should guide us to get students motivated.

There is no learning without motivation!

8.3 How to motivate trainees

☞ *Tasks and questions should be relevant to the trainee's world!*

A situation that can really occur to the student gives a higher impact than an abstract, artificial one.

The danger of getting an electrical shock is possible all the time.

☞ Create a mood of tension and curiosity in the beginning of the lesson!

Start with something that draws the attention of the students.

"Chart # 1" does not immediately indicate what the lesson is about. It will take some time until trainees find out what shall be demonstrated with this chart. There is a kind of riddle in it which students will try to find out.

☞ *Inform the students about your goals!*

The trainees should be aware of the objective of the lesson.

It does not mean that a trainee shall be given the results. He/she should be informed about the "why" of the lesson. Our example could look like this: "Today we try to find out, why it is so important to be careful when operating with electricity."

☞ *Use as many examples as possible!*

Examples have the effect that information can be transformed from abstract to.

Let the trainees tell their experiences. For sure there will be somebody who has once got an electrical shock, or at least one of his / her friends or family members. Ask them in detail what happened and about the consequences. If they have no personal experiences, tell them about somebody out of your acquaintances. For e.g.: “A man did not come home from work. His family was waiting and it was already dark. The children were crying because they were hungry. Usually the father comes home with some food…” and so on.

☞ *Take trainees’ questions serious!*

Always react to questions of the students. Asking lets the instructor know that trainees are interested and that they listened to what the teacher said. A question is a sign of curiosity. Making fun of a trainee because his / her question does not suit the topic is absolutely putting off the student! If there is the feeling that a question is not suitable, the reason might be that the instructor’s explanation was confusing.

N.B.:
There are no stupid questions, there might only be stupid answers!

☞ *Do not forget to praise the students for correct answers!*

In most situations this is common practice in Ghanaian schools. Frequently the students are challenged to clap for a good answer. In some situations it was discovered that clapping as a sign of praise was used too frequently. It became a very monotone action and so lost it’s motivating character. If this is the case, try other methods. For e.g. make a rank for good answers, give points for a good answer, or even give a good mark for an answer, elect the answer of the day…

☞ *Raise the level gradually*

When you start from a low level, even students with low pre-knowledge can contribute to the solution of a problem. By going forward step by step the students will be upgraded accordingly and are not overtaxed.

The example makes that very transparent. In the beginning most of the trainees might know the possible dangers. The consequences of an accident are obviously very comprehensive and have to be worked out with the help of the group. To put up some safety regulations is yet on the level of transfer and can be seen as very difficult but solvable with the knowledge acquired within this lesson.

☞ *Give trainees room for self-realisation*

Young people have a somewhat "inner restlessness". Sometimes they want to try some thing themselves and not just listen to what the master says.

In our example there is a group-work where trainees are able to work autonomously. It does not mean that they can do what they want but that they are working on a task independently.

☞ *Avoid punishment*

Some people say that when a teacher is punishing a trainee, it is not more than a sign, that the instructor does not have proper pedagogical knowledge or is just overtaxed. A penalty usually creates a negative mood and this will not help to create a surrounding that promotes learning. It should only be used when the instructor does not have any other idea, what to do

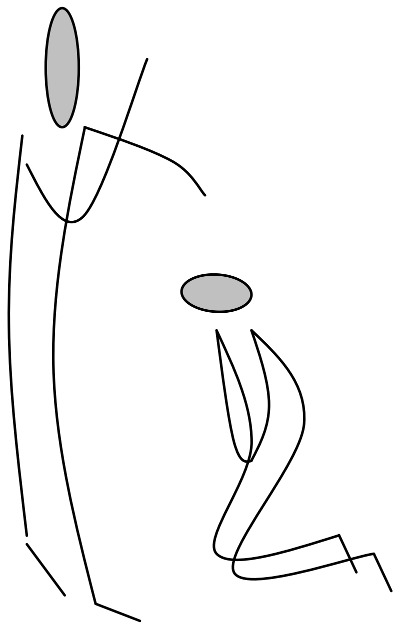

else. In some situations, teachers declare that it is necessary to punish somebody to set an example. In such situations, the behaviour being punished must be obvious to all. Make sure that the sentence is commensurate with the “offence”. If somebody failed in a test, it is not helpful to let him / her go down on his knees. Find out why the student failed and give him / her an additional exercise. Punishment should always be the very last way of motivation!

“A divine curiosity is burning in every healthy child, but unfortunately withers in time” (Albert Einstein)

As teachers we should work hard to grow this threatened plant!

9 The Four-Step-Method

Each new studies in the educational sector brings new methods and ideas for the lessons. What goes for the general education goes for the technical and vocational education too. Actually the main concentration is on "holistic teaching" and "acting-oriented teaching". These methods usually require an immense amount of time for preparation. It also requires sophisticated equipment. Despite the fact that several training institutes in Europe are working hard on the implementation of these new teaching methods they are still very difficult to introduce. Many already recognised that there is still a large gap between the theoretical concept and the practice. Some teachers already recognised that not all what is in the papers can be put into practice.

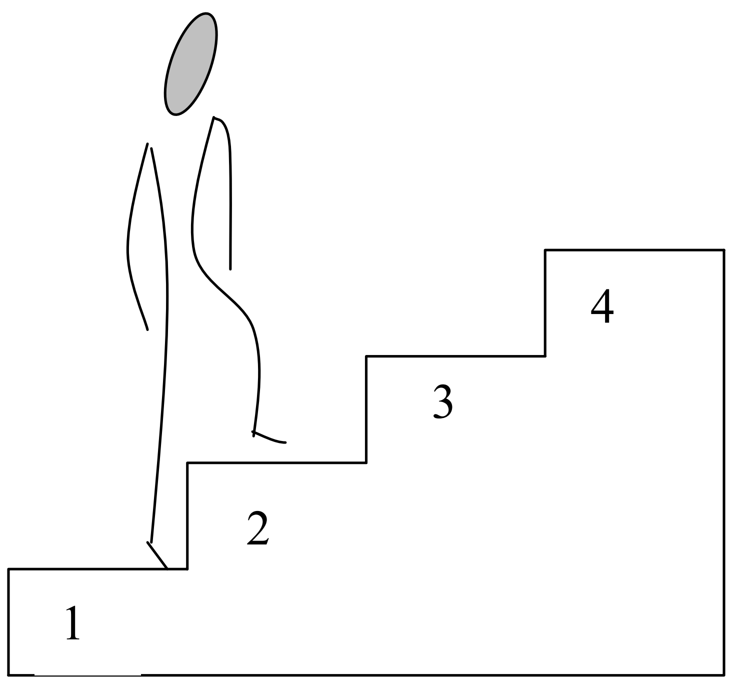

Nevertheless there are some older and time-tested methods which are still valid and in a lot of situations very convenient. One is the Four-Step-Method. In practical lessons there is also a four-step-method. This is related to the one in theoretical lessons. It is based on the so-called TWI-programme of the USA industries (TWI = training within industry) which was developed during World War II, when production had to be changed from civil driven to war driven. Later on several other countries adopted this concept. In practical lessons the four steps are:

☞ Preparation

All materials at the workplace have to be prepared, so that the practical instruction can take place without any interruption

☞ Demonstration

The instructor demonstrates with several repetitions at different speed the skill that should be learnt (psycho-motor domain).

☞ Reproduction

Trainees repeat the demonstrated action several times until they reach a certain level under permanent supervision of the instructor.

☞ Finish

Trainees practice themselves. The instructor only helps when necessary.

The four-step-method for theory lessons has similarities that can be discovered in the following description. There are various reasons why a lesson has to be divided this way. A gradual procedure makes it easier to adopt the new learning matters. It will easily be implemented in the previous knowledge of the students and so, as learnt earlier, can simply be remembered. An arranged lesson helps the trainees to get a survey about the whole topic. Motivation will be kept up this way. So there is no doubt that the learning process improves when a lesson is well arranged. The way to do it cannot be fixed generally. There are too many variables and sometimes there are circumstances that do not allow us to proceed in the style that was chosen. It may be that trainees did not react the way the teacher expected and the answers that were needed to continue did not come, because the students were on the wrong track. Often, time is an element that cannot be calculated exactly. When a group work is done, trainees may need much more time than was scheduled. Here and there the level of trainees is so unequal that it takes a long period to explain things properly for everybody's understanding. Furthermore "external" influences can disturb the lesson plan. If suddenly there is light-off and the trainer planned to use an overhead projector, he might be in trouble explaining

things in another way. Heavy rainfall can make so loud that understanding somebody talking becomes impossible. All these factors may force the instructor to change his plan and to improvise.
Nevertheless, the four-step-method is a reasonable and proven way to structure and plan a lesson. It is not a dogmatic scheme but a generalisation of experiences because it applies to the teaching work-routine, method and ability. It is a logical way of presenting material that is suitable to most class sessions. All instructors should be familiar with it because it can even be seen as the foundation for other methods.

9.1 Step 1: Introduction

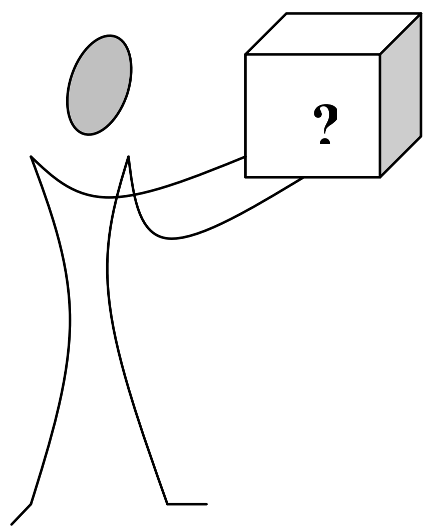

This part is also known as *opening, preparation, or set-up*. The main purpose of this section is to arouse the students' interest and to show a linkage between the teaching matter and the trainees. This is why some people call this phase *motivation*. In sports one would say *warm-up*. But telling the students that the following matter is important does not motivate. Much worse is to shout; "be quiet and listen, you have to know this". It might get silence to the classroom but that's all. A common habit of many instructors is to begin with the sentence: "Today we want to learn something about…". This indicates that the trainees want to learn too, but very often this is only the teacher's wish! There are other more effective ways to begin a lesson: Repetition or connection to previous knowledge and confrontation with a problem.

Repetition or connection to previous knowledge

Familiar knowledge of the trainees should be activated. When you start with the result of the last lesson, the trainees can see a structure and can guess where you want to lead them.

Presentation of a Problem

Tausch found out that there are various psychological processes with the trainee as well as with the instructors, when somebody is confronted with a problem.

He/she has a first contact with the subject matter and pays attention unconsciously. There is a "tension", a feeling or even spontaneous interest in solving the problem. Sometimes you can see immediate spontaneous activity. The teacher should keep quiet as long as possible and let the trainees act or react.

The situation the trainee is confronted with should simply be interesting. There is no need for complicated experiments or exaggerations.

Try to find a natural or an interesting situation that might get the students curious.

The preparation step should:

1. be adequate for the contents
2. be adapted to the intellectual level of the trainees
3. lead directly to the topic of the lesson
4. be as simple as possible
5. stimulate interest.

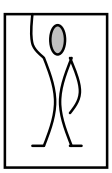

Check the preparation step of our example for the five demands!

Even though the first step is very important for motivation, the teacher must not stop trying to motivate. Motivation means arousing interest and keeping it upright. One has to remember that several instructors come to class every day teaching a new subject, expecting that trainees automatically show interest. It is not easy for people to concentrate for a long time. So take every possibility to encourage trainees and do not demand too much.

T lesson *dangers through electricity* could be "opened" in another way:

☞ Play a guessing game!

The instructor tells a story like this: A man was brought to a hospital. After the consultation the doctor said: "You have heart flutter and some signs of burning on your right hand. You were lucky that it was only a short contact". Now the teacher asks: "Who can tell what has happened to this man?"

9.2 Step 2: Presentation

Now that the trainees are familiar with the topic of the lesson you have to develop the subject matter logically. There are various aspects, which belong to the topic, and you must ensure that everything is discussed.

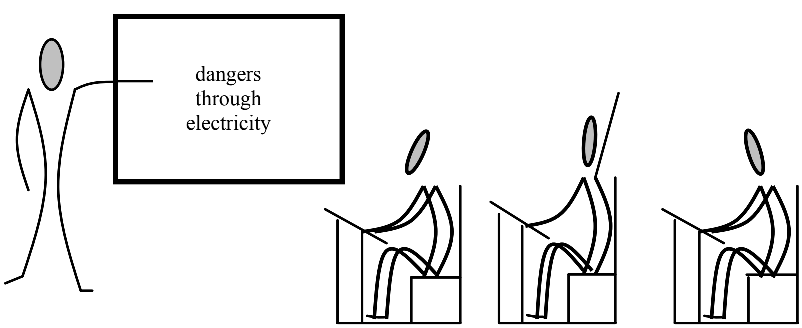

This part of the lesson represents the time, when trainees are confronted with new knowledge, which the teacher wants them to

learn. Meaningful learning anticipates understanding. Within a lesson it is the period which consumes most of the time.
Therefore follow you lesson planning. Start with the first objective according to your lesson preparation and go through it as you intended to do and finish it with a short check-up. Then go to your next objective and so on. Try to consider the following:

- ☞ Try to embody the trainees as much as possible and avoid lecturing. Everything that is discovered by the trainees themselves will be easier to be learnt.

- ☞ Do not give information by yourself when a student can do it easily. For e.g. when you have charts, do not explain it yourself immediately but ask a trainee whether he / she can comment on it or explain it.

- ☞ Take down trainees' answers on the blackboard immediately, when they are suitable. It demonstrates to the students clearly that they made an important contribution to the lesson. This is highly motivating and helps to create a good atmosphere in the classroom and promotes team spirit.

- ☞ Try to stimulate the trainees to think about the problem!

- ☞ Do not continue with the next objective when you have the feeling that trainees did not comprehend the last one. In such a case, take your time and explain again.

- ☞ Give additional examples when the subject matter seems not to be clear.

- ☞ Let one of the brighter students explain the topic if the others did not understand. Sometimes the youth have their own "language" or vocabulary and a trainee can explain better than an adult master.

☞ Always teach from known to unknown. This is the way to give justice to "ASSIMILATION".

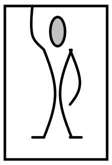

Look at the presentation-step of the example and try to find another way to develop at least one objective!

9.3 Step 3: Application

I hear and I forget,
I see and I remember,
I practise and I understand! (Chinese saying)

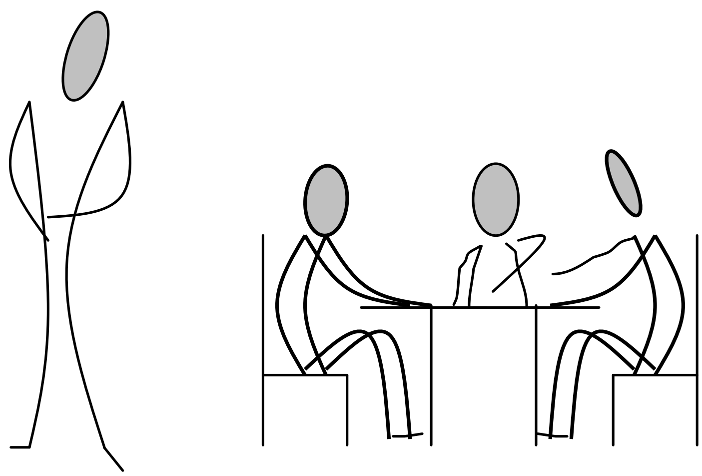

This is the time, when the learning process actually takes place. The trainees shall be given the opportunity to apply the new stuff in order to get the information into the long-term memory. As in the Chinese saying above, the best way to learn is to exercise. The instructor can give the trainees a task that they have to solve on their own. This can be done in groups or individually (usually in Mathematics there is a lot of individual work, when trainees do some calculations on their own) or even together with the whole class. The trainer should now act as supervisor or moderator and leave it to the trainees to do the active part. It does not mean that it's break time for the instructor. He has to be among the trainees and help when help is required. Only major errors should be corrected during the problem-solving period. We all know the "learning by trial and error". This can happen during this time too. When the instructor detects that a student is completely on the wrong track, he should correct him / her. Otherwise the student will become frustrated and discouraged, when after working for a long period and he does not get any reasonable result. If you have the feeling that a trainee does not know how to go on, you should give a few hints that would guide him to the correct solution. It will help to build up his self-confidence.

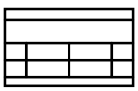

In our example fixing some safety regulations covers the application. This could be done in group-work too. After the group-work the results must be collected and written on the blackboard.

9.4 Step 4: Check-up

Since there is a check-up after every objective during the presentation step, this step can also be named the "final check-up". There are various purposes for this phase. First of all, the instructor wants to find out, whether the lesson was successful or not. If the teacher was following his lesson plan and the advise given in the previous steps, there should not be a gap of knowledge anymore. Within this check-up, the concentration should be on the student's ability to use this new information for his trade. Make sure that the trainees know about the context to which this particular learning matter belongs.

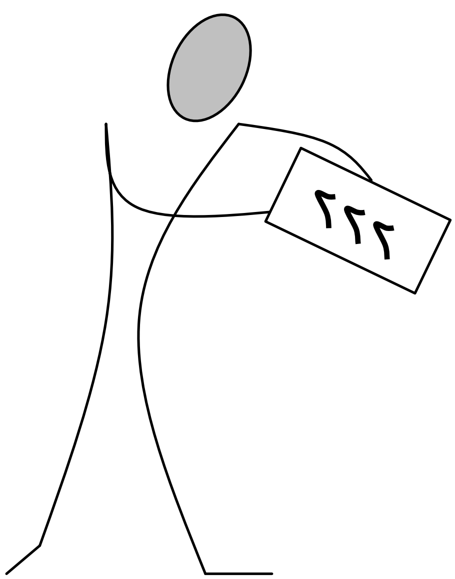

A second main purpose of this step is reinforcement. By repetition or utilisation of the new facts, you help the students to get this into the long-term memory. The learning process takes place already in the classroom and is not banned to homework. Check-up cannot only be done by writing or orally but also through a role-play.

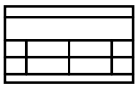

Instead of asking, how somebody's family can be afflicted by an accident through electricity, you can organise a role-play in the classroom. Some trainees play the workers, one is the injured, another the doctor, the nurse, the family members and so on. The casting will show, how many persons are involved, when somebody has an accident at the working place.

When planning the fourth step, take into consideration the following:

☞ Make sure that the check-up does not only cover the WHAT, but even the WHY!

The trainees should not only know that they should be careful when operating with electrical power, but also why they should be careful. This is because it has many uncomfortable consequences not only for the person, but for others too.

☞ Ask questions or give exercises that are very related to the job!

☞ Ask questions that show the importance of the newly learnt matter!

☞ Do not use this step as a kind of assessment that could discourage the trainees. Bear in mind that it is a significant phase for the learning process, which should help to improve learning.

☞ It is very important that the entire lesson ends with a good atmosphere!

10 The Sphere of Action in Vocational Education
(according to Roesch)

There are divers ways to run a lesson. The sphere of action classifies these ways according to the activity of the teacher and the students within the teaching and learning process. It describes the role the two groups – teacher and students – play in getting new knowledge during a class. It refers to the participation of the two in the lesson. The three ways of the sphere of action are known as a) the presenting way, b) the discovering way and c) the developing way. They are all very common in Technical Training. The method the teacher chooses depends on a variety of facts:

☞ *The objectives of the lesson*
Not every objective can be taught in every way.

☞ *The time that is available for a specific topic*
The scheme of work sometimes limits the time available to the instructors.

☞ *The topic itself*
The range of some topics might be to wide. This means that not every method is appropriate.

☞ *The properties of the trainees concerning learning*
There are classes with trainees who learn fast and easily and others who have more difficulties in learning. Freshmen will learn differently compared to majored trainees.

☞ *The local circumstances*
Sometimes a certain way of teaching requires teaching aids that are not available.

The sphere of action is not obligatory for a whole lesson. The method you choose can change from one objective to the other or even within an objective. It is up to the trainer to choose the adequate “method”. About 99% of all lessons in Technical and Vocational Education and Training observed in Ghana run only one way, probably because most of the teachers made only this experience when they were at school or during their apprenticeship.

There are two styles selected in the example:
- Objective one and two: developing way,
- Objective three: discovering way.

10.1 The Presenting Way

What people commonly know as lecturing is defined as the presenting way. It is the traditional method of teaching where the instructor stands

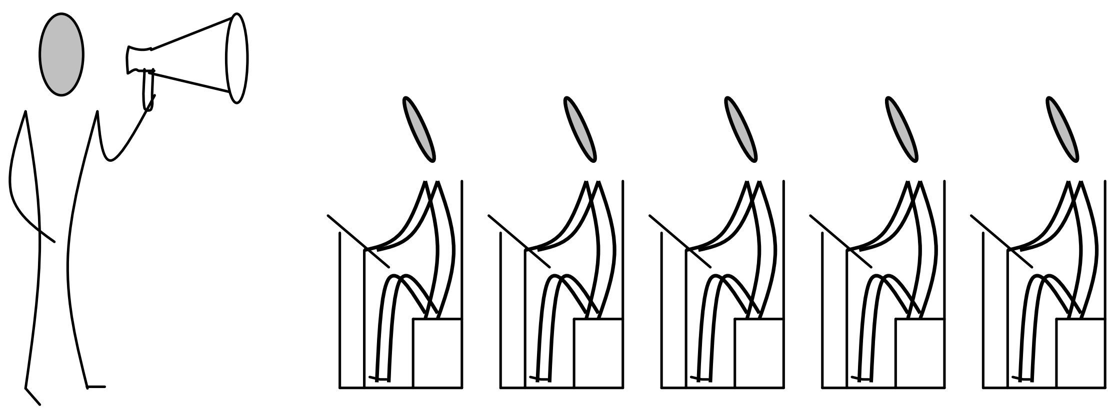

in front of the class, gives information and explanations and sometimes asks questions. The students usually have to listen passively to the instructor’s remarks and answer questions here and there. It concentrates on the teacher’s activity and is absolutely controlled by the teacher. Last but not least, it is the most widely used method in all types of schools.

Characteristics of the Presenting Way

☞ *The presenting way is "time-saving"*

Since it has the style of a lecture the instructor does not expect any interruptions by the trainees. He can download the information as he prepared them without having to react to questions or interactions.

☞ *It gives information systematically, relevantly and basically.*

It is almost exclusively the teacher who is acting. He can prepare the learning matter according to the specific situation in the class, because he is aware of the strengths and weaknesses and the pre-knowledge of his trainees.

☞ *The trainee gets time for information processing.*

For the method to be "time-saving" there should be sufficient time left at the end of every step, so that trainees can process the given facts.

☞ *It is the oldest, traditional and longest lasting way.*

Everywhere in the world at every time you will find lessons which follow this character. It is the classical method in the Universities, where almost everything is done in lectures.

☞ *It informs in logical units.*

The teacher is the person who has the necessary skills for teaching the subject. He is aware of the information that was given to the students in former lessons and he knows what will follow. It is up to him to plan the lesson as a unit so that it suits perfectly into this scheme.

☞ *A huge amount of new information can be presented.*

When there is no time foreseen for the learning process itself, this method allows dropping a high quantity of facts. There is nobody who interrupts and the instructor controls the speed of his lecturing. The students might be ordered to learn at home and the whole time in school will be used for presenting information.

Problems of the Presenting Way

☞ *Risk that the trainee is demoted to the rank of a receiver, without having the possibility of active participation.*

Human beings do not want to be outsiders. Most of us want to be insiders. This means we want to take part actively in the things that are going on. Democracy allows people to influence the political scene of a country, but dictatorship does not and usually people are not satisfied with this situation. In vocational training the presenting way can be compared with the features of a dictatorship. There is one single person who is acting and the others have to listen. Trainees get the feeling that they are only outsiders and it wouldn't make a difference whether they are in the classroom or they aren't. Being degraded to a receiver does not motivate the students very much.

☞ *Risk that trainees may not identify with the new knowledge.*

Getting information in lecture form reminds us about top-down-methods which are considered as very unpleasant. When someone else tells a person what to learn then people look at the teaching matter critically in the first place. It has the effect that some of the information will not be picked up.

☞ *Risk that the instructor holds long monologues which make the trainee lose his or her attention.*

When an instructor prepared a lesson in the presenting way, he / she lists the information that should be given and submits it to the students. The teachers knowledge about the teaching matter is usually

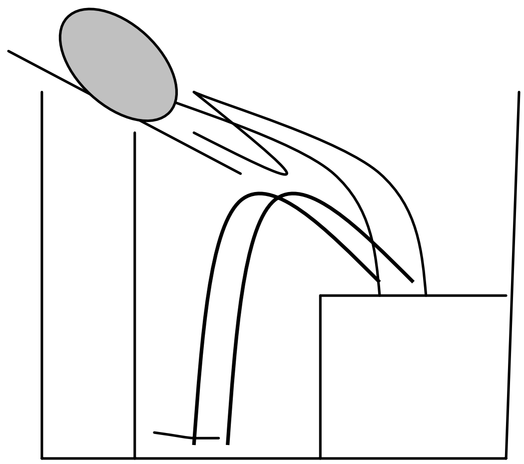

very big and one could talk and talk and talk, not recognising that it is becoming boring for the listeners. Sometimes we do not limit ourselves to the material we prepared but we extend it with additional information that comes to our mind while talking. The sense of time is very much depending on the part someone plays in the lesson. For people who have to listen and are so to speak inactive, a lesson can be felt as a never-ending one. To the one who is talking, playing the active part, time seems to run away. While teachers move from class to class and have some variation this way, the students normally have to sit on the same chair at the same desk in the classroom the whole day which makes it very difficult to concentrate.

☞ *Risk that the contents are too much, so that the trainee is not able to get all the new information.*

The probability that teachers could overload a lesson when lecturing was already described in the upper paragraph and the consequences of overloading and overtaxing too have been explained in former chapters (didactic reduction, the effect of structure)

☞ *If there is no change in style, the trainees lose motivation because the lesson becomes monotonous.*

Monotony has the effect of fatigue. Hearing the same voice all the time is very similar to meditation. It makes people switch off their mind. Students will start to dream with their eyes opened. For an instructor who is lecturing most of the time it is not obvious how many of the trainees are really following the teacher’s talk. When the talk is one-sided the trainees will lose interest in the lesson and motivation can only be reached extrinsically.

☞ *Trainees' initiative is killed and trainees complete the stages of learning passively.*

Technical and Vocational education wants to train young people for self-employment too. When they have their own business, these former trainees have to work and take decisions on their own. People do not have this kind of abilities and have to be trained. If they always learnt in the presenting way and are used to being receivers, it would become difficult for them to start their own activity.

When the Presenting way should be chosen

☞ *When lesson time is limited.*

As this method is absolutely teacher-centred he / she is the pacemaker. The instructor can decide on the amount of knowledge that shall be given. At least even a handout in the form of an information sheet can be dropped. Please bear in mind that information was only downloaded. No learning process took place during this time. You cannot expect that the students will have understood what they were told, even if they answered with "Yes Sir" or "Yes Madam" to the question "Did you get me?" If you taught this way you have to make sure that the learning matter is easy enough and trainees have enough time to review work at home alone.

☞ *When much information has to be given out.*

The same annotations as there are in the above paragraph come with this point too. The more information is given and the shorter the time provided, the lower the learning process of the students is likely to be.

☞ *When dealing with a large number of trainee.*

As we will see later, it is not always possible to teach in the other styles that will be introduced. When you have more than 40 or 50 trainees in one class it can become difficult to handle the situation in another way than the presenting way. If this is the situation then do not be too fast. Reduce the teaching lesson for a period to a manageable size.

☞ *When resources are insufficient.*

Lecturing does not require any technical resources. It is the speech of the instructor that is given and notes will be put down on the blackboard. There is usually no need for any sophisticated equipment, except the teacher wants to use some for explanations. Usually it is a simple talk and can take place everywhere.

☞ *When dealing with new trainees.*

Many teachers are not familiar with other teaching techniques than the presenting way, nor are trainees. Both groups usually did not experience any other methods. This means in the very beginning you might have to teach in the "old style" when having a new class.

☞ *When a new topic is being introduced.*

Other methods usually build on previous knowledge. When introducing an absolutely new topic, where the trainees have no pre-knowledge the introduction is commonly done in the presenting way. In this situation an instructor can't count on the co-operation of the students and chooses the lecture style.

Remarks on the presenting way

Summarising, one can say that the presenting way has many advantages for the teacher but few for the students. It requires only very little time for preparation compared to other methods. This is only one of many reasons why most of the instructors teach this way. Furthermore, because lecturing is very economic in preparation it might have several justifications. Some instructors do live far from the school and have to travel every day so that time available for preparation is

short. Some centres operate double-stream in line with the policy to get more skilled young people. This engages teachers longer in school and cuts time for lesson planning. In addition, teaching is not the only duty that instructors have in a vocational education institute. There are some more responsibilities for almost every trainer in the centre.
Some teachers might prefer the presenting way of teaching because it allows an "easy living". There is no need for a long preparation and while lecturing, trainees can hardly ask questions that may throw the teacher off balance.
In most cases teachers use the presenting way because they are just not familiar with other methods. Often they did not experience other teaching methods during their own school time.
Whatever the reason is, it is obvious that the time has come, to start with something "new".

10.2 The discovering way

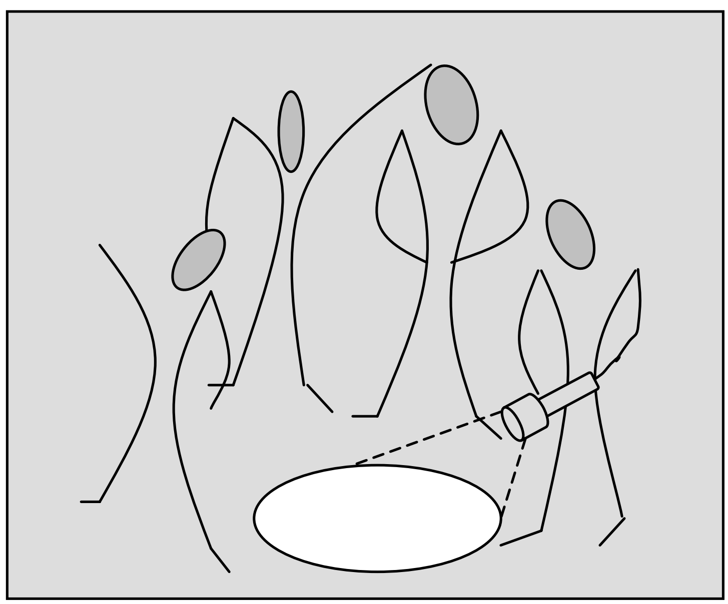

In contrast to the presenting way, where activity is on the teacher's side, the discovering way is trainee-concentrated.
At the beginning of a lesson or a new objective within a lesson, the trainer gives exact information on what the next goal is. Working out a solution then becomes the duty of the students. This does not mean that the instructor is superfluous. Trainees cannot do the instructor's job. The teacher therefore has to prepare the subject matter in a way that students get the necessary help to come

to a meaningful result. Sometimes the previous objectives in a lesson give enough information to solve the problem. Other aids that can be given include books and work sheets. After some time the results will be presented and discussed. While trainees are working, the teacher always has to be available for the trainees in case they need his help.

Characteristics of the discovering way

☞ *It is up to the trainees to find the solution*

Of course it is the instructor who guides the trainees. By preparing the necessary equipment for the students he / she already gives the direction on how to proceed. However, it is eventually the trainees who have to go the last step on their own. Finally, it is the students' job to come to a conclusion. People learn and remember easier all the things that they worked out on their own. When trainees work on the solution of a problem they will easily apply this knowledge later on in their trade.

☞ *The instructor is in the background and is called when trainees need him.*

While using the discovering way, the performance of the instructor is quite different from the usual situation. The instructor this time can be regarded as a facilitator or moderator. As the students do the active part, the trainer is somehow passive. He only intervenes when he discovers a major error or when asked to help by the students. Being in the background does not mean to be inactive or having a break. The teacher always has to be the master of the situation.

☞ *Trainees discuss various possibilities among themselves.*

When looking for a solution within a group of people one has to find a common agreement. Therefore trainees will come out with several proposals and they have to discuss them. At the end many ideas from the students lead to the final solution.

☞ *The work is shared and the students present the results in their own way.*

Different ideas lead to different strategies. It is the trainees' decision whether to choose one strategy or to follow several concepts. When doing so they have to organise their work autonomously. This has to be the case when presenting the results of their job. They have to find an arrangement among themselves on how to present their work.

☞*All information is researched by the trainees.*

In contrast to the presenting way, where usually the solution will be given to the students and many other facts that belong to the topic are left out, the trainees have to filter and prove the whole information that is given. It is not only the given information that has to be understood but even all the contributions of the entire class.

Problems of the discovering way

☞ *It takes a lot of time.*

All the procedures mentioned in the above chapter take time. It is time-consuming when the trainees and not the instructor control the classroom situation. Trainees usually require time to organise themselves. Taking a lot of time does not mean that this time is wasted. A learning process is already taking place when trainees are engaged in finding a solution, as we already heard earlier on.

☞ *The instructor requires more time in preparation.*

This method can only be successful when trainees have the necessary "outfit", which has to be well prepared. The instructor has to think of all the ideas that might come from the students and supply the right information. If this is not done, trainees would be disoriented and then the time could be regarded as really wasted time, because trainees cannot discover the meaning of their job and the goal they should reach.

☞ *Instructor may lose control over the trainees.*

A teacher's job is not easy at all. Some instructors have a so-called natural authority, which helps them to get the necessary respect of the trainees. Some do not and so they have to build up authority by knowledge. A person who is a master of his trade will always be respected. If there is no authority and the instructor always has problems with the behaviour of the class, he / she may be in a bigger trouble with the developing way. With this method a teacher leaves the activity in the hands of the students and will then have even more difficulties running the class in a reasonable atmosphere.

☞ *Necessary materials should be available.*

When the class is supposed to work independently, everybody has to get the material that is necessary to do the job. If there were not sufficient papers, books and so on trainees cannot do their work and usually start to disturb others. Within a short time there will be a big mess in the classroom and it will not be easy to return to the normal situation. In some centres it is often difficult get the indispensable material, because there are no books at all or there is no photocopier etc.

☞ *Trainees become confused when they have little knowledge about the topic.*

When a topic is very comprehensive and trainees cannot get an overview above the context, they may also loose the goal. Not knowing what one is exactly doing cannot only confuse people but even irritate them. In a mood like this no trainee is able to learn and the atmosphere does not create a surrounding that promotes learning at all. Whenever there is the feeling that the knowledge of the trainees about the topic is to little, one cannot expect satisfactory results.

☞*There is the tendency for the instructor to be lazy.*

Some teachers are not familiar with the situation where trainees work on their own for a long period. They use the time to do other things and forget to support the trainees. Instead of being around and at the students' disposal some trainers leave the classroom for a rest.

☞*Trainees have to be trained in this method.*

This type of teaching might be new not only to many instructors but also to most of the trainees. Therefore when applying this method for the first time in a class it has to be explained in detail. This will take a lot of time. Once it is explained the class will be able to work this way for the time of their apprenticeship and even longer. In the beginning the instructor has to be patient and allow the trainees to adopt new ideas.

☞ *Risk of overtaxing*

When the class is not well prepared and teaching aids are not appropriate, trainees will be overtaxed. This may at the end discourage the students.

When the discovering way should be chosen

☞ *When dealing with matured trainees.*

Matured trainees are those who are well-versed in the topic and are familiar with the teacher. A teacher has to know the class (behaviour) and the level of efficiency. The preparation has to use this knowledge. If there are freshmen, a trainer cannot estimate the reaction of a class and will have difficulties to prepare a lesson this way.

☞ *When dealing with a small number of trainees, so that control is maintained*

At universities where sometimes several hundred students join a course you can hardly find the discovering way. Normally lectures are used. In vocational training there are often not more than about 30 trainees in one class, which can be considered as a tolerable number. When trainers and trainees are familiar with this method it can be adequate for up to 50 pupils.

☞ *When materials are available in sufficient number.*

Sometimes the "necessary tools" are very easy to get. Sometimes one does not need any materials at all. In our example, the knowledge of the previous objectives and the information that there are three groups who might be afflicted (the person him / herself, his / her family / the company) were sufficient for matured trainees to come to a reasonable result. When cards, pins and markers are not available, the results can be noted on a piece of paper and later presented on the blackboard.

☞ *When enough time is available*

Very often teachers think that there is not sufficient time for this method. However, with the traditional teaching method a lot of time is needed, to repeat and repeat again, because the students didn't understand the subject matter. The time factor can indeed be a problem when the method is newly introduced. Having used it once, the time should be considered secondary, because there is a learning process taking place during the lesson.

Remarks on the discovering way

The discovering way has a number of possible difficulties, but has many advantages too. Awareness of the problems that can occur will already help to avoid them.

This type of teaching gives more to the trainees than just the transmission of new trade knowledge. The way the students learn helps them to work on solutions in general. Vocational education should in many cases lead to self-employment, where these past-trainees have to work autonomously from the very beginning. This can be learnt with the discovering method. The trainees are forced to work together to come to a solution which helps to build up social competencies like co-operation. As there are contributions from many trainees to the same topic, a wide range of information around the whole issue will be spotlighted and discussed, so that the students get a holistic view of the teaching matter.
Surely, the preparation for the instructor has to be more intensive and will take more time than usual. However, materials once prepared will serve you for a long time. Although the teacher cannot go on break during the time trainees are operating, he / she can relax a bit, at least not being forced to talk. The more often this method is used and the more the students are familiar with it the more relaxing it will become for the instructor.

In our example the discovering way has been chosen for the third objective. It is done in group-work. The trainees have to find out what consequences an accident has for various parties. The information to find out was given in the previous period of the lesson. A hospital was already mentioned, and there was the discussion with family members too. So no more material is necessary.

When it becomes obvious that trainees are not able to handle this problem (consequences for various parties) which materials could be given to the trainees to make the task manageable for them?

10.3 The developing way

This way can be considered as a combination of both the discovering

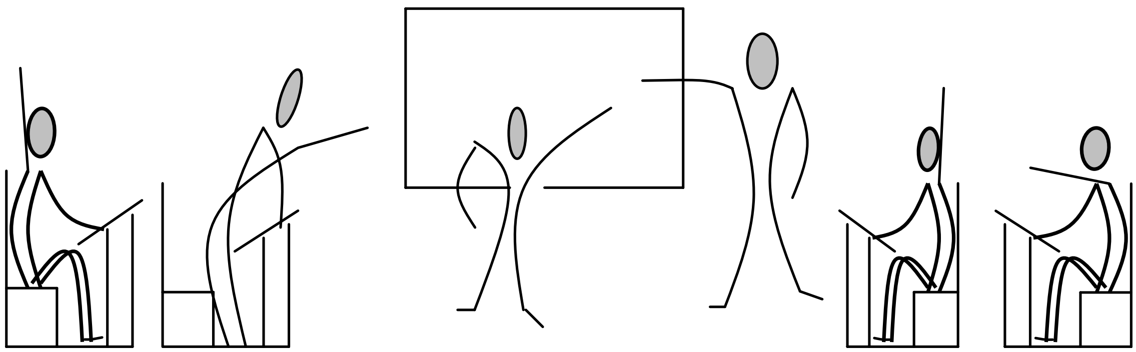

and the presenting ways. It tries to unify the advantages of the others and to reduce the number of problems that could occur. Compared to the other methods where activity was either concentrated on the instructor or the trainees, here it is spread to both. It means that most of the time the trainer and trainees are active. One can call it a co-operative style where responsibility and duties are distributed to every party. However, make sure that this distribution is somehow equal, so that the trainees do not get the feeling that they have to do the instructor's job.

Characteristics of the Developing Way

☞ *The instructor and trainees are partners.*

It does not mean that trainees have the same rights as the teacher. In every company there is a senior partner and a junior partner. Junior partners do not have the same rights as the seniors. However, being the junior gives the feeling of being taken serious. It will show the trainees that their opinions and their ideas are important. Co-operation will make the class more lively and fruitful and the participation of trainees in the teaching will rise gradually.

☞ *The instructor acts as a facilitator.*

As the developing way contains items of the other two ways, the instructor's job does too. At one moment he / she will be a lecturer, while at another he / she will act like a moderator. It always depends on the situation. But even when trainees are doing the most active part, it is not break time for the teacher. He / she has to keep the track all the time. The trainees should never get the feeling that they are left alone with any task.

☞ *The trainees interact among themselves.*

When a lesson is teacher-centred all answers and contributions of the trainees are directed to the instructor. Observing a class in a developing style one can see that there are discussions and exchange of views among trainees, because they have their ideas and have to explain and defend them, when classmates ask questions. These discussions have to be supervised by the instructor.

☞ *The instructor and trainees are active throughout the period.*

In the presenting way it is usually the instructor who is talking, except when trainees are answering a question here and there. In the discovering way it is mostly the students who are active and the master is in the background. This concentration on only one of the two parties is not existent in the developing way. It is a to-and-from between trainees and teacher and trainees among themselves.

Problems of the developing way

☞ *It takes more time than the presenting way.*

It is true that this way is more time-consuming. However, it has already been explained that: Time-consuming does not mean time-wasting. The more experience trainees and teachers have with this method the less relevant will be the time factor.

☞ *Sufficient materials and tools must be available.*

Whether this is important or not will depend on planning and preparation. When thinking about how to run a lesson on time, there should be enough time to prepare the necessary materials. It is not every lesson that has to be done this way. Existing ones can be modified a bit and then contain part of a new teaching style. In a later chapter we will learn some more about teaching aids.

☞ *Lectures may turn into argumentative session.*

This is only a problem, when a discussion gets out of control or does not involve the subject matter. The more discussions are on the topic, the more the trainees will learn.

When appropriately applicable

☞ *ALMOST ALWAYS!*

This teaching method is nearly possible all the time. There are only some cases, where it can become inconvenient.

- When the topic is absolutely new

If trainees do not have any pre-knowledge of the topic, it is difficult for them to co-operate, because there can only be very few contributions from the students and it will automatically turn into a presenting style.

- The number of trainees is too large

  When dealing with a very big class (let's say above 50) it is no longer possible to involve many of the trainees. While the teacher is communicating with some of the students the others will withdraw themselves.

- Lack of time

  Sometimes teachers might be under time pressure. There is still a large number of topics to teach and there is not sufficient time available. In this situation the information transfer and the learning process have to be split. In the training centre the teacher will present the knowledge and explain quickly, and the trainees have to learn everything at home. However, be aware that the learning itself will not be as efficient as it would have been with the developing way.

Remarks on the Developing Way

In summary, one can say that the big difference between the developing way and the traditional teaching lies in the involvement of the trainees. The students should no longer be seen just as receivers but as partners. Many of the lessons that are held in Technical Education and Vocational Training could be transformed into developing style lessons with only some modifications. Very often there are many situations where students could take over the part the instructor usually plays. For e.g. when a chart is shown, one can ask a trainee to try to explain what he sees. Normally this is what instructors do. However, some teaching aids and some situations in a class are so obvious in their intention that a student can do it too.

10.4 Final annotations

Of course, leaving behind the traditional way of teaching and starting something new will be more work. However, as already mentioned it does not mean that all previous preparations and lesson plans have to thrown away. Many of them can still be used and some of them can be overhauled. And finally, nobody will expect that every lesson has to be changed at once. If one lesson a week were modified it would be a progress. Naturally every input will have an output.

☞ *A better and easier learning for the trainees*

As the learning process already happens partly in the classroom, the knowledge of the trainees grows faster without spending more time with homework. This will have the result of further motivation and engagement.

☞ *A good mood in the classroom*

The more effective teaching is, the higher the acceptance of the trainees. Being actively involved shows trainees that they were part of and contributing to a successful lesson. This will provide team spirit. It is motivating and makes students attend classes willingly.

☞ *Better results*

Everything that is encouraging trainees to learn and participate actively in the lessons will bring higher efficiency in learning. Things will be remembered easily and this will lead to better results in class tests and the trade testing examinations.

☞ *Good reputation*

The opinion of trainees should normally not be considered too much, when talking about the reputation of a teacher. The students have a different way of assessing the achievements of an instructor. Usually they are influenced by issues that have little to do with the teaching.

Asking pupils why a teacher has a high reputation regularly will get you one answer: “We learnt a lot from this instructor”. If the final result (having got a good apprenticeship and having passed the examinations) is positive, most of all the inconveniences are passé and forgotten. What remains is whether there was success or not. A good reputation of instructors will result in a good reputation of the whole training institute. This will encourage more young people to attend the institute. Obviously it is a circle and it is nobody else than the instructor who should give the initial impact to improve the present situation by reviewing his teaching style.

Active involvement of trainees is very important for the learning process as the following chart shows.

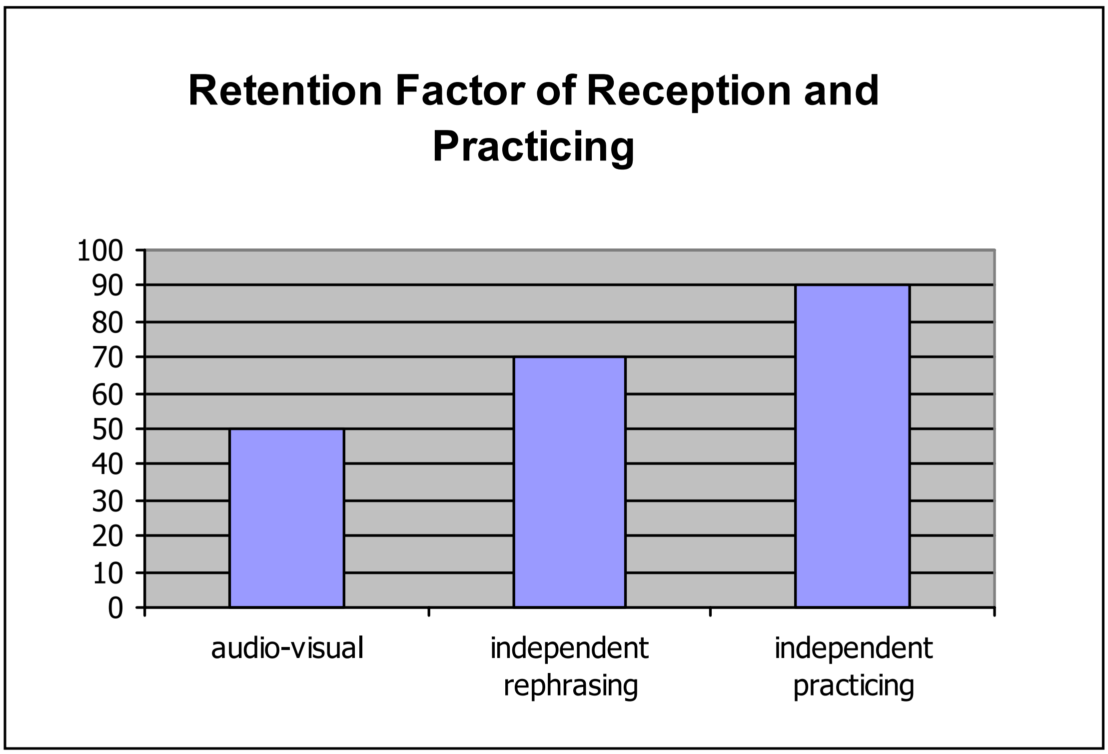

The chart shows very impressively that even proper use of teaching aids is not as effective as active participation of the students.

In our example only the developing and discovering ways are used. One can easily see that the level is rising gradually and that the progress of the lesson depends on the contributions of the trainees. It is important that the students always give an explanation for their contributions: “Which of the cables would you prefer?” – “Why would you prefer…” . If not so, the lesson would turn into a guessing game and there was no learning process. The students should be involved throughout the whole lesson. At the end every trainee will have the feeling that the result which is noted on the blackboard is part of his / her own effort. The notes on the blackboard when developed step by step makes it easy to recapitulate how it was built up. The trainees can then recognise how they themselves were guided gradually to a common goal.

Presenting	Developing	Discovering
Concentrates on teacher's activity. Absolutely controlled by the instructor.	Activity is concentrated on instructor and trainees. (co-operation)	Concentrates on trainees' activities.
The instructor intensively controls trainees.	Instructor gives the impulse, he/ she is the initiator	Trainees decide on their own what they will do
The instructor plays the main role. He is the transmitter of information	New knowledge is won in common work	Trainees decide on their own how they will proceed
The instructor presents, explain, shows, illustrates	Instructor is a facilitator	Instructor is in the background
Objective setting is done by the instructor	Trainees are able to participate as partners	Trainees do the objective setting
Instructor offers a whole lot of information	The instructor guides the trainees	Trainees make proposals
Instructor presents complex knowledge systematically	Instructor gives instruction to the trainees	Trainees solve problems on their own
Instructor prefers cognitive and affective objectives	Trainee is interactive	Trainees share work, work together

The Sphere of action in Vocational Education, main features.

11 The Social Action in Vocational Training

In recent times, the focus of vocational training has shifted from one which is teacher centred to one that is more student-oriented-teaching in which the students themselves are actively involved. Instructors have to break away from the prejudice that a lesson was good when the instructor talked most of the time.
Teaching is above all a form of communication. The instructor communicates with trainees and trainees among themselves. Communication among trainees should be encouraged. Three fundamental forms of communication or social actions in vocational training are *Class Teaching, Partner Teaching and Group Teaching*.

11.1 Class teaching

This is the most common and classical way of teaching. It means that the teacher addresses the whole class at the same time. Everything he / she is saying is directed to everybody in the classroom in the same way. Nobody is excluded or given any other duties. In a nutshell, the entire class is involved in the same task.
Class teaching usually does not respect the abilities or deficiencies of particular students. Bright trainees are addressed the same way as trainees who do not learn easily. This means that class teaching has to go on a well balance level so that everybody can follow. However, this is not always possible. Sometimes as teachers we have to accept that there is a small percentage of dropouts. This is a very critically statement but reducing the level too much or concentrating on particular trainees will lead to the neglect of the rest of the class. Within class teaching, the instructor has control over the entire class. In contrast with other forms of teaching he has only to concentrate on one main group and is not busy with several different assemblies as it is the case in, for e.g. in group-work.

11.2 Group Teaching

In group teaching, the class will be split up into several groups temporarily. There is a lot of research work about the implications of group-work. One effect, which is commonly known for example, is the group dynamics. It has to do with the process of mutual influence

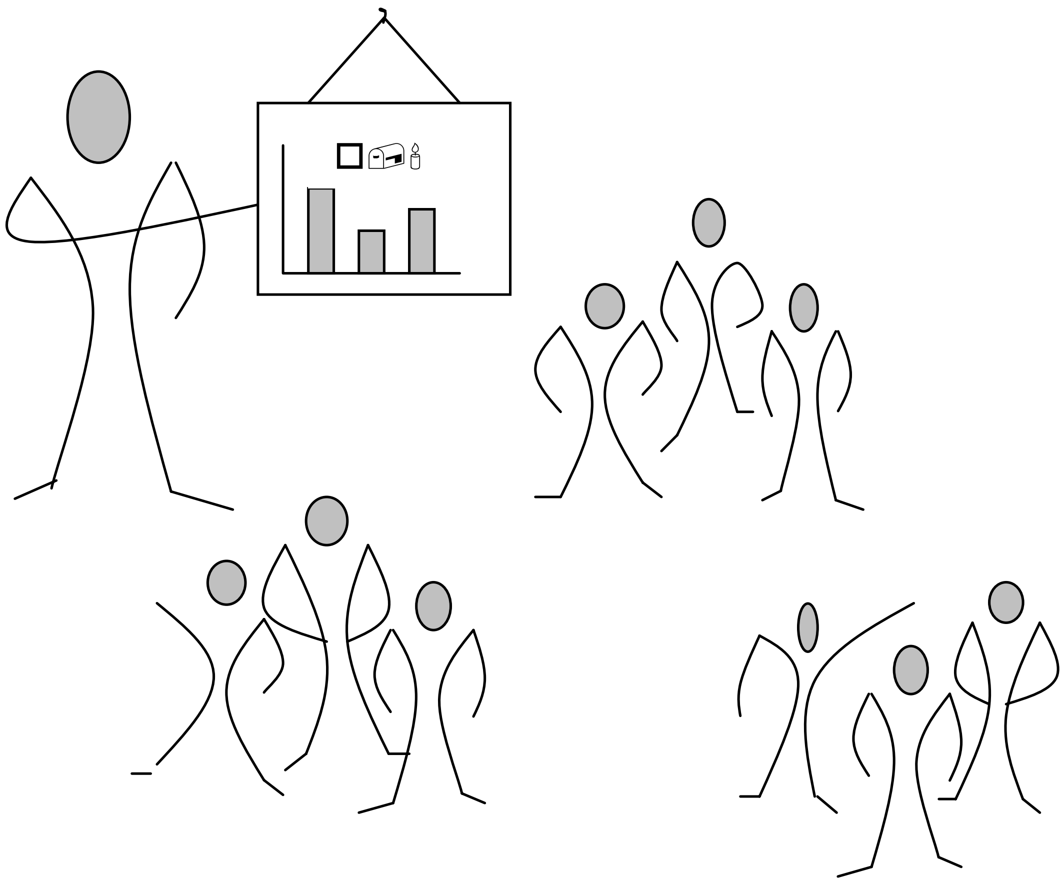

among the group members. The achievement of a group is more than the sum of the potential of every single group member. "Together we are strong" is a common saying. There are various types of groups according to the causality of their formation and the level of interaction. The class in total is for e.g. a so-called formal group, because it is formed by organisational necessities and has a particular purpose. The "group-work group" is a *secondary group* and might even be called a *team* under certain circumstances. It is organised rationally to solve a certain task. Additionally, we have primary groups (for e.g. a family) and informal groups (for e.g. a clique).

Types of Group-work

Depending on the task the groups were given there are two types of group-work: the *common-job group-work* and the *job-sharing group-work*. Which type of group-work he / she chooses depends on the teacher's intention.

The Common-job Group-work

When there is a new and important subject matter, this is the type, the teacher should decide to use.
Common-job means that all groups are working intensively on the solution of exactly the same problem. All groups are given the same task, the same questions and the same materials. At the end of the group-work the group leader will present the results as requested at the beginning of the group-work. It has the advantage that all trainees are going through the same topic and get nearly the same information. This influences the learning process. On the one hand the students approach the learning matter during the period of the group-work. When presenting the results, every group-leader will give the group's solution of the problem with his / her own words. This embodies a repetition, which means reinforcement. When various groups are working on the same task, another positive side-effect is that the output is higher because more groups means more ideas, more statements and more contributions. After a group-work like this, usually every trainee should be familiar with the new knowledge, without additional homework.

Objective 3 of our example is supposed to be reached with a group-work. To do it the common-job way means that all groups have to deal with the three questions: a) what consequences does an accident have for the person, b) what consequences does an accident have for the family and c) what consequences does an accident have for the company? Every group has to think about the three fields. The ideas will be discussed within the group and later on presented to the rest of the class, when group-work has ended. After that they will hear the results of the other groups, which will normally be quite similar to their own and therefore be considered as confirmation of their own work. In addition, different conclusions might come out, which one group has not considered.

The Job-sharing Group-work

When a common knowledge of the topic is existent and all trainees are familiar with the general solution of a particular problem, this type of group-work can be chosen to work out special details.
Every group is working on a part of a solution. At the end of the group-work, the group-speakers present the result of their group and thereby inform their classmates of the group's work. Every group works out one part of a comprehensive statement. At the end of the lesson, when every group gives its results, the partial contributions are assembled to a final completion like pieces of a puzzle to a picture. This form of group-teaching is more time-saving than the other one, because every group has only part of the job to do. When compared with the common-job type, the learning process is not as intensive, because there is no repetition and the part of the solution which is found out through other groups is usually given in the presenting way, which was already discovered as less effective than other ones. In addition, the output is normally lower, because there are fewer people engaged with one task.

Looking at our example, even a job-sharing group-work can lead to a satisfying solution of objective 3. In this case, one group has to find an answer to the question "what consequences does an accident have for the person?", the second group "what consequences does an accident have for the family?" and group 3 "what consequences does an accident have for the company?". At the end of the period, the various group speakers present their results to the entire class. The instructor is supposed to put the answers on the blackboard, so that at the end of the group-work the answer is completed on the board. The effect will be that less time is needed, because the tasks of the groups are smaller than with the other type. On the other hand, the various group members are only confronted with part of the solution during the period of the group-work.

Advantages of Group Teaching

Apart from variation during a lesson, group teaching has many positive aspects, which can be divided into three groups.

Intellectual procedures

☞ *Trainees go into the tasks more intensively.*

Since the students have to solve a problem on their own. The fact that they have to present the results to the entire class later on will encourage them to work on the task intensively.

☞ *Trainees express themselves.*

When the group finds a solution during a discussion it has to be formulated in the form of a sentence. This will help to express the learning matter in their own words. When they use their own vocabulary it is easy for their classmates to understand. At least, being forced to bring an answer to paper is a training in the English language.

☞ *Trainees learn rules of discussion within a group.*

A group can educate its members. Even when one participant is the group speaker, all of them are on the same level. There is nobody of a higher rank and so trainees learn to accept rules easily because there is no order from any authority. They recognise the urgency of a certain behaviour that is necessary for the group to be effective.

☞ *They hear the opinion of their comrades*

Within a group smaller than the entire class, more trainees can come out with their opinion and the students get to know each other better.

☞ *They learn to work independently.*

Very often it is only the goal which is given in a group-work. The solution is somehow indicated through the given teaching aids, but it is up to the trainees to use these aids the right way. This is a small step to guide trainees to learn to organise their work themselves and to be self-reliant.

☞ *They learn how to solve problems in general.*

A comprehensive objective of vocational training or education in general is to promote the ability to solve problems. It is one of the most important things in life and is very important during the time of apprenticeship.

☞ *They are challenged and therefore develop ambition.*

The effect of a challenge was already explained in the chapter about motivation. When the challenges are on an adequate level it leads to the development of ambition.

Social Procedures

☞ *Trainees stay in close contact with their comrades and help each other.*

A smaller group is not as anonymous as the entire class. The students recognise the importance of everybody's contribution and help one another.

☞ *Students consider the opinion of the other group members*

One important rule for living together in peace and harmony is to listen to and to respect other peoples' opinion. They learn that for a common solution it is important to get several point of views, which will be discussed and analysed and finally form the best consensus.

☞ *Trainees take group-decisions.*

A group-decision has an added advantage that because of the various contributions every group member has formed a part of the decision.

☞ *There is identification with the group and the results of the group's work.*

As the solution of the problem was a common decision, every participant is responsible for this group-decision in the same way.
This becomes very obvious when the group leader is presenting the results to the entire class. Sometimes there is a criticism from other classmates. Almost immediately another member of the group starts speaking either to give more information or to defend the group-leader's remarks.

☞ *They develop their own roles for the work within the group, they learn to respect and control these roles.*

Usually these types of roles are given by the school authorities and the youth has to abide by it. These top-down orders are not as willingly adopted as compared to when they are developed by the trainees themselves.

☞ *They get a feedback on their own performance.*

Normally there is a reaction from both the classmates and the teacher. It enables the participants to analyse their job and their behaviour during group-work. Trainees can see that a good co-operation lead to good results or they will understand why they failed.

Emotional Procedures

☞ *Trainees get higher satisfaction because the work was self-controlled.*

Even when the instructor is around the whole time, the group's job is done independently. They are not under the direct supervision of the instructor. So trainees feel free to express themselves, not fearing any restrictions by a teacher. Additionally, they recognise that they are able to solve problems without the interference of a trainer.

☞ *Even reserved persons may give their opinion.*

A class can be referred to as being homogeneous but there are still various types of persons in that class. You have the whole range from very calm to hyperactive. Normally the calm ones do not attract attention during classes. Only when a teacher directs a question to such a person will he / she answer. Nobody knows the reasons for this behaviour and often the contributions of these persons are very valuable. Being calm does not mean knowing nothing. In a group smaller than the entire class, those trainees might be encouraged to contribute actively.

☞ *Shy people lose some of their fears.*

When they get a positive feedback during group-work sometimes shy persons gain self-confidence and dare to answer in a bigger auditorium too.

☞ *Even trainees who are not very effective can enjoy the success of the group.*

Self-confidence is often a question of success. The more successful someone is, the higher his / her self-confidence becomes. People who usually are not very active do not have many opportunities to enjoy the feeling of success and so suffer from low self- confidence. Within a group-work all members will share the success even when one person did not contribute much.

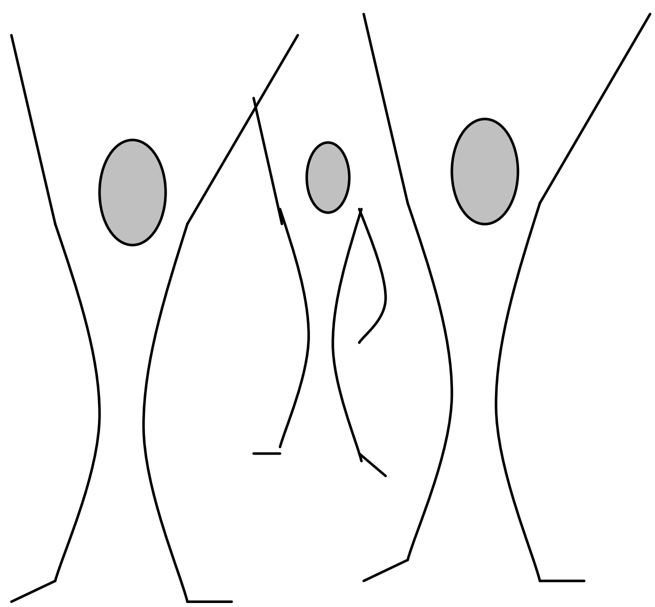

☞ *Usually trainees are highly motivated.*

All what we heard up to now has a positive influence on the motivation of the trainees. It is not only the variation in teaching, the change of methods, but also the possibility for the trainees to work in an atmosphere which is not as strict as a teacher-centred lesson.

Disadvantages of group teaching

The many advantages of group-teaching became apparent in the last paragraphs. The negative aspects of group work seem almost insignificant when compared with the positive aspects. On the one hand, they are of organisational nature and on the other hand they do not affect the intellectual, social and emotional procedures of a group work. Nevertheless, they shall be mentioned and explained.

☞ *Sometimes the conditions for group teaching are difficult.*

Small classrooms and lack of materials can make the realisation of a group-work laborious. If the classroom is too small, the discussions of one group may disturb the other. Upcoming disturbances in one group can be contagious to other groups. Disturbances may also occur when there are inadequate materials and the students become bored or start looking for materials from the other groups.

☞ *Some trainees may use the chance to "hide" in the anonymity of the group.*

During class teaching an instructor always has an eye on the entire class. Every student gets the feeling that he / she is under the supervision of the instructor and behaves according to this. While supervising a group-work, the teacher has to go from group to group to offer assistance. So he / she is not able to control the whole class. Some people

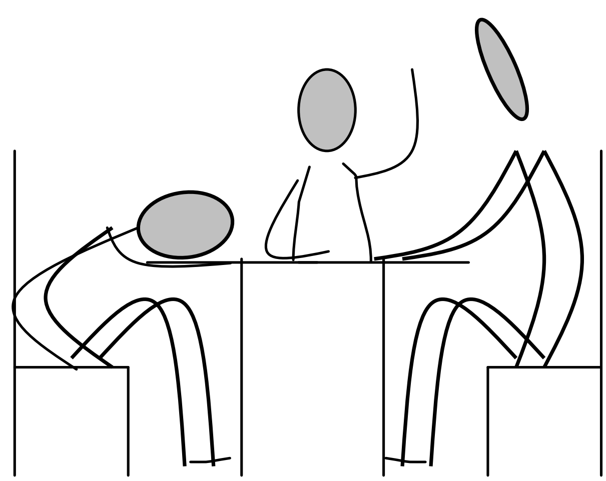

might use the opportunity of being out of the trainer's control to relax or even doze. This problem usually occurs when group-work is introduced to trainees as a new type of teaching.

☞ *In the beginning group-work takes time and the results might not be very satisfying!*

Both trainees and instructors have to learn more about group-work. As we shall see later on, there are various terms when a group is formed. Those procedures take much time in the beginning, but are easily learnt later on, when trainees are familiar with the new sphere of action in the classroom.

Composition of the Groups

When a group is being formed it means that people will come closer than is usually the case. The process of forming a team of several individuals comes with four steps: forming – storming – norming – performing.

☞ *Forming*

This phase is reflected in the careful approach adopted by everybody, to find out which behaviour is adequate and tolerated. During this period there is a major concentration on the group leader. The members do not work on the problem itself but define regulations and ways for co-operation.

☞ *Storming*

Minor conflicts which will be a setback for the group leader may arise. The task will be regarded very critically and this is likely to affect progress of work.

☞ *Norming*

It is the time for finding a group-identity. Several opinions will be discussed and the collaboration gradually becomes friendly and loyal.

☞ *Performing*

The group members now concentrate on the solution to the problem. Proposals are discussed constructively and there is mutual acceptance.

Types of Constellations

Depending on the intention of the teacher, there are several possibilities of group formation.

☞ *According to natural circumstances.*

It means that in this case the instructor does not have anything special in mind for separating or grouping particular students. So trainees form groups according to their names in alphabetical order. Sometimes the various rows of the benches in the classroom are used in forming the group: Row 1 = group 1 and so on. This is a common way, because not much time will be wasted for the procedure of group forming. On the other hand it may have negative influence on the effectiveness of the group, because the group-members may not understand each other well or are all on a low level. When there are only underachievers in a group, only job-sharing group-work should be done and this particular group should be given an easier task. If it was a common-job group-work, this group would have difficulties to come to a conclusion or would identify that their solutions are of lower quality than the ones of the high achievers. This may discourage the trainees.

☞ *According to the affection of trainees.*

The instructor allows the trainees to pick each other. This will in the beginning excite the students, because friends come together. But it might not be very useful for the effectiveness of the group's performance. Often when friends meet, they have other things to discuss than to work on the given task.

☞ *According to the interests of the students.*

This is frequently used to support a competent outcome especially when the tasks have something to do with the trainees' interests. But it is not always possible to find out what the common fascination is based on.

☞ *According to the achievement of the trainees.*

For a good mood in the classroom this is the most appropriate way to form groups. Try to mix students of high level with students of low level. All groups would be at the same standard and nobody has the feeling of being at a disadvantage. This is because sometimes group-work might be regarded as a kind of competition among trainees. Additionally low-achievers can benefit from high achievers.

☞ *According to gender issues.*

In recent times more and more female trainees enter so-called male dominated professions and the other way around. Usually these "newcomers" are in the minority. It is the teacher's task to integrate these young persons as properly as possible. If the fewer persons always form their own group it will give them a feeling that they have to stand their ground all the time.

Realisation of Group-Teaching

Before group-teaching can achieve the needed objective, the following have to be noted:

Group- teaching requires a good preparation to be successful!

☞ *Make sure that every participant has the necessary materials.*

When students do not have the equipment that is needed, they will start looking for materials somewhere else or will be engaged with something else. Both situations create a mess in the classroom and will spoil an atmosphere that requires working mentally.

☞ *Make sure that the instructions are clear so that everybody will understand.*

Unclear instructions will lead to confusion among students. As we learnt about the processes taking place during the formation of a group, there are already some complications to manage. Additional misunderstandings can lead to a complete blackout.

☞ *Make sure that the task is at an adequate level so that everybody can contribute to finding the solution.*

When the task is so difficult that only the best student in a group is able to contribute to the solution or he alone is working on the problem, it is no longer group-work and the identification with the group and everything which comes with it gets lost.

☞ *Arrange the classroom so that the formation of the groups can be done quickly.*

When a teacher knows the trainees of a class, he / she can arrange the trainees according to the groups he wants to have. It means that having found a well-balanced mixture of groups, the instructor can let them sit in the same way during normal classes. The group formation according to normal circumstances will be turned around. If you place the members of group 1 in row one, you can combine two options: the normal circumstances and the achievement of the trainees.

☞ *Take care that you have a well balanced mixture of groups*

This point does not refer to the achievement of the trainees but to the behaviour and other group-work dynamics. One thing is to separate troublemakers. When there is only one good-for-nothing trainee in every group he / she will not be able to disrupt the effectiveness of the group. On the contrary: a group might be able to educate its members! On the other hand, when all the troublemakers in a class are in one group they will encourage each other and stir up the whole surrounding.

☞ *Try to get a good size of group.*

For effective working within a class, groups of 3-5 persons each are adequate.

☞ *Name a group leader.*

Do this before the group-work starts. When you do not do so, there will be confusion during the working period and especially at the end of the group-work, when somebody has to present the results to the entire class. Usually nobody wants to take over this responsibility and everybody pushes it to his / her neighbour.

☞ *Put down the order for the presentation!*

What goes for the naming of the group leader goes for the order too. Sometimes you can just arrange a kind of raffle. Write down numbers according to the number of groups on small pieces of papers and let the group-leaders draw one.

☞ *Announce whether you will give marks for the work or not.*

Some instructors want to put pressure on trainees when the progress of the group-work does not satisfy him / her by announcing that marks will be given. When this takes place after the group-work has already started, the students will regard it as penalty and build up a negative attitude towards group-work.

☞ *Tell the trainees the time that is scheduled for the job!*

It will help the students to organise their time management effectively. When group-work is limited to 5 minutes, the trainees recognise that the result of the group-work cannot be very comprehensive. On the other hand a scheduled time of 30 minutes will announce that an extensive answer is expected and not just one or two sentences.

☞ *Check the results of the various groups while trainees are doing the task!*

You can correct major errors in time so that trainees do not waste time working on a useless solution. If every group had the same task the teacher can have a look at the answers before the group leaders present their results. Call the group with the best solution to every question to come out.

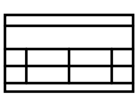

In the group-work of our example there are three questions to answer: "What are the consequences for the person?", "What are the consequences for the family?" and "What are the consequences for the company?". Checking the results before presentation enables the teacher to know the best answer. If recognising that group one has the answer " a person can be seriously injured" and group two has the answer "there is no danger for the person" to the first question, than he / she may ask only group one for this answer but not two. This way the best results come out very fast and will be put on the board. If there was time left the instructor could ask for the answers of the other groups to discuss them.

Wherever trainees will work in the future, they will have to collaborate with other persons. There are only few cases where people are working alone. To live and behave within a group is normally learnt and experienced within the family life. Working together means that people have to rely on other group-members and their job. A group's work can only be of high quality when everybody does his part well and the co-operation is perfect too. To reach this holistic objective of an apprenticeship, group-work within theoretical lessons can be of enormous help. In the beginning there might be several problems and only few output. This should not lead a teacher to drop this important form of teaching.

11.3 Partner – Teaching

Partner teaching means that two people are working together on one task. Even though not everything that applies to group-work goes for partner teaching, it is very similar to group-teaching. Some might say that this method of teaching is group-teaching namely with small groups of two persons. A task is given to two trainees who are sitting together. The process of forming this mini group wastes no time. By means of partner teaching, trainees can develop solutions independently and give each other mutual assistance. This type of teaching is mainly good for easy tasks, because there might be too few ideas coming out of two people.

12 Teaching Aids

Teaching Aids are materials which the teacher uses in his / her lesson to make teaching and learning more effective. They are called *teaching and learning resources* or just *media* too. Just as everybody, the trainees learn through our five senses. The senses mostly utilised depends on the particular trade. The taste is very important for food processing jobs like catering and cooking but less significant for masons. Generally one can say that the more senses are involved in the teaching-learning process, the more efficient it will be (see chart below).

The Senses Through Which People Learn

Every good instructor should use media as much as possible but the lesson should not become a multi-media-show. Teaching and learning resources are a help for the instructor but do not replace him / her. In particular when the teaching matter is very complex and abstract, media are a proper assistant to make things clear and concrete and last not least, make teaching and learning easier. Media have a motivational effect, because good media focuses the trainees' attention to the teaching matter. Compared to a pure verbal instruction, media liven up a lesson.
Teaching and learning resources are not always appropriate. They attract attention and can side-track too. Instructors should use media only when they support the learning process. One main criterion for the use of teaching aids is that they are adequate to the purpose. It doesn't make sense to have big effort for a small outcome. Often it is the

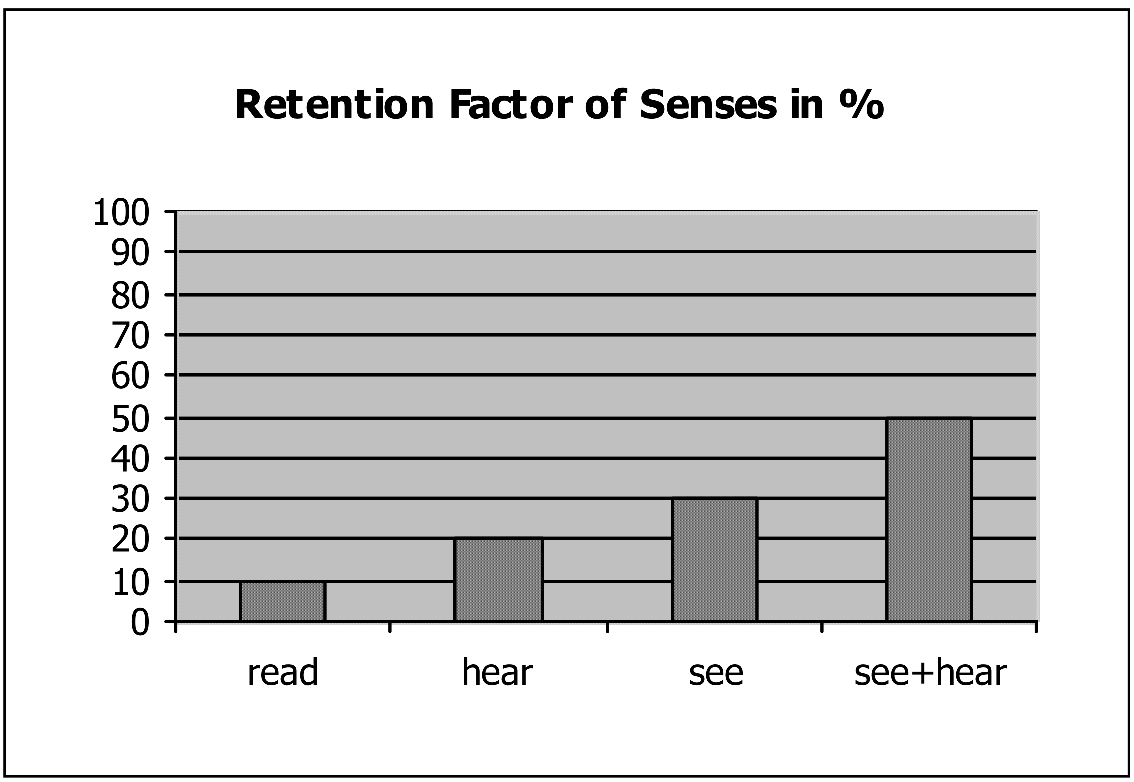

simple things which are most effective. Adequate means adequate to the circumstances at the training centre, adequate to the level of the trainees, adequate to the teaching matter and adequate in general to the trainees' world. The major concentration in this chapter will be on the use of the chalkboard, cards, charts and work sheets, which belong to the group of the visual teaching aids. Other categories are aural and audio-visual media. Other ways to group media is to distinguish between hardware (e.g. overhead projector, TV) and software (e.g. transparencies, books). There are other forms of categorisation.

12.1 Visual Teaching Aids

Visual teaching aids are supposed to be received with the eyes. It may come together with verbal comments and explanations. Examples of visual media are blackboard, whiteboard, pin-board, charts, maps, pictures, flipcharts, slides, photos, overhead projector (+ transparencies), books and worksheets as well as models and originals.

The Blackboard

The blackboard is called chalkboard too. It is the classic teaching aid in every classroom. Even though many other media were developed for teaching and training, the chalkboard never lost its importance. This is because the chalkboard has many advantages.

Advantages of The Blackboard

☞ *Availability*

A chalkboard is usually available in every classroom. It is not necessary to carry it. As it is fixed, nobody can take it away, an so it is usable always. The blackboard will remain where it is after use and has not to be removed or stored at the end of a class.

☞ *Easy Handling*

The use of a chalkboard does not require any sophisticated technical equipment (like a screen for the overhead projector). The necessary items like chalk, rulers and dusters or sponge are comparably cheap and easy to get.

☞ *Easy Use*

Working on the chalkboard is easy to learn and does not demand special technical abilities. With some exercises, every instructor should be able to do a readable writing on the blackboard.

☞ *Flexibility*

No other teaching aid allows us to correct spelling or mistakes as fast and easy as the chalkboard. Mistakes can be wiped out quickly. So the board stands for fast notes as well, which can be removed when the space is needed for the planned notes. The same goes for any changes or improvements which come during the lesson through the trainees or the teacher.

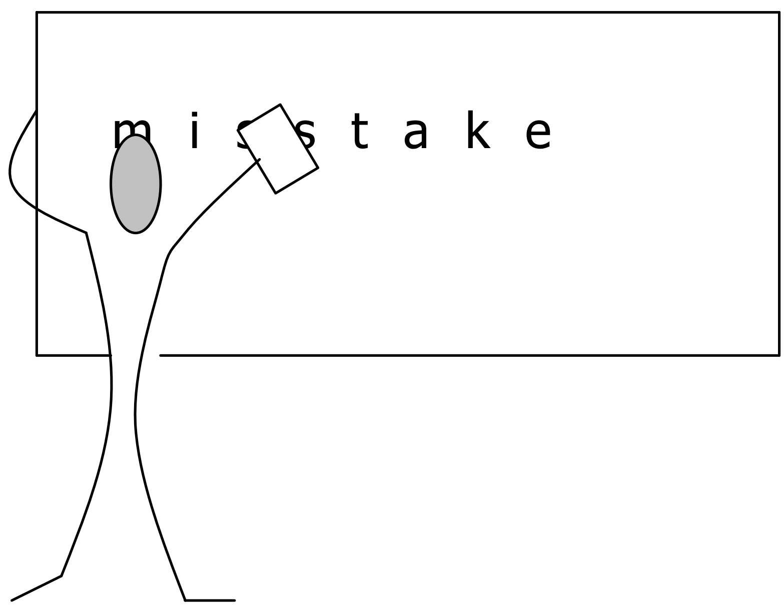

☞ *Gradual development*

Usually the blackboard notes are developed during the lesson. The trainees are not confronted with a sudden huge amount of information but can see a moderate progress of the final product and have the possibility to follow this development. So it becomes easy for the trainees to recognise the context and get an easy survey.

☞ *Spontaneity*

Since it is available all the time and notes can be removed quickly it enables the teacher make spontaneous explanations (such as simple drawings) when necessary.

☞ *Space*

Wallboards, as some people call it too, are usually generous in their dimensions. They offer sufficient space for all kind of notes and enables us to structure the notes so that the students easily understand it.

☞ *Catchiness*

Some keywords like the heading are written on the blackboard at the beginning of the lesson and remain there usually up to the end of the lesson. This makes it easy for the students to remember such information.

☞ *Orientation*

The notes on the blackboard reflect the topic of the day and the context. Trainees will therefore be able to put new information in place, as the board is always there to assist them.

Disadvantages of the Blackboard

☞ *Dust*

It creates dust. Anybody who uses chalk has white and dusty hands and cloths too. Even the surrounding of the blackboard is usually covered with chalk dust.

☞ *Conversion*

A teacher who is writing on the board has always to turn round and show his back to the class. This might encourage some trainees to disturb because they are out of sight of the trainer.

☞ *Cleaning*

A chalkboard has to be cleaned properly. Very often it is only a duster that is used. The consequence is a grey-board instead of a blackboard. The more intensive the blackboard is used the more difficult it is for the students to read the words on the board.

☞ *Handwriting*

Some trainers have a handwriting that isn't easy to read. Some of these teachers do not recognise this, because they are used to their own style. However, a teacher is always an idol. This means trainees are likely to write down things exactly the same way that it is written on the board.

☞ *Sustainability*

What is written on the board makes a longer impression on the trainees. It can however be a big disadvantage. When mistakes are made on the board which are not identified. In this case the students might learn the wrong thing.

Rules for The Use of A Blackboard

☞ *Placement*

As the blackboard is usually fixed on the wall or is part of the wall, it cannot be moved. So the teacher must ensure that the school desks are arranged in such way that all trainees can see the board.

☞ *Script*

The writing has to be clear and big enough so that everybody can identify the words. Bear in mind that even trainees in the very last row have to be able to read it. Every good teacher goes to the back of the classroom inconspicuously from time to time for himself to check his writing. On the one hand he will see whether it is big enough and so readable for everybody and on the other hand it is much easier to identify spelling mistakes from the distance.

☞ *Structure*

The notes on the blackboard should be clearly arranged. Students should be able to get the message easily. The blackboard should be an assistance to the trainees but not a closed book. Easy drawings can explain more than thousand words. (See an additional example at the end of the chapter).

☞ *Progress*

The final blackboard notes should be the result of a continuous process during the lesson. It means that the instructor should put down phrases whenever they are said. Do not wait up to the end of the lesson to write down the entire contents but make the notes of a trainee's answer immediately. It will encourage the trainees to further contribute and give him the feeling of having done something important for the outcome of the lesson. It also enables the trainees to follow the progress of the lesson.

☞ *Colour*

Chalkboards are normally dark green or black. Therefore coloured chalk has to be used thoughtfully. Some colours are almost invisible on a dark background (see chart below!). Colours should be used for highlighting important things and help in structuring the notes but not to make it funny! Make sure that the used colours are distinguishable.

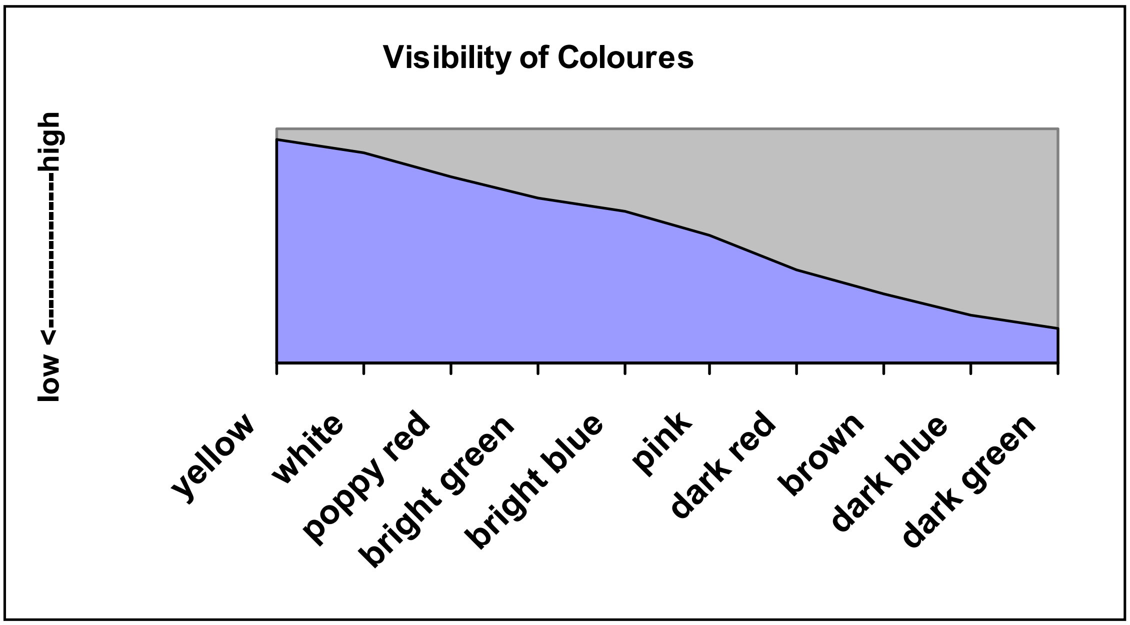

Visibility of colours on a blackboard according to KNAPP

☞ *Participation*

Whenever possible a teacher should try to write down students answers literally. It will encourage students to participate actively in the class, give a positive feedback and helps improve their English language.

☞ *Size*

"Less is More!" Do not overload the blackboard. Try to keep things short and clear. The more you write on the blackboard the more difficult it becomes for the students to pick up the information.

☞ *Design*

Try to create a layout that trainees can easily copy into their exercise books. This has to do with the size itself, the use of simple words and sentences as well as simple drawings.

☞ *Timing*

Inform the students whether to copy the notes immediately or at the end of the lesson. Plan sufficient time for trainees to copy the notes. Mistakes can be avoided and learning will be promoted.

☞ *Misuse*

Do not send a trainee to the blackboard to make a fool out of him as a form of punishment. This will discourage trainees from participating actively. On the other hand praise trainees for a good performance on the blackboard. This will promote the students' interest in finding a common solution to a problem.

A trainee's exercise book is always the image of the chalkboard layout. Be aware therefore that it will be a reflection of the teacher him / herself.

On the following pages there are two chalkboard layouts to the same lesson. The original one, which was seen like this in a lesson and the modified type according to this chapter.

THE USE OF SCAFFOLDS

Definition:

A scaffold is a framework of metal or wooden poles and planks used as a temporary platform from which building repair or construction is carried out. Dependent scaffolds are usually fixed on a house or a wall and cannot stand freely while there are poles only on one side of the scaffold while the other side is connected with the building, which gives it a proper stability. Independent scaffolds do not require the support of any wall or building because of having poles on both sides, which allow erecting them independently. Scaffolds can carry workers and material but one must be careful not to put too many loads like blocks and mortar so that the planks cannot carry all the load and will break down.

Original chalkboard layout

THE USE OF SCAFFOLDS

Scaffolds will be put up when work has to be done above men's height.
They carry persons and construction material.

Types of scaffolds

DEPENDENT SCAFFOLD

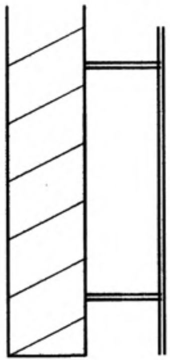

Dependent scaffolds are fixed onto the building and can not stand alone.

Dependent scaffolds are more stable but cannot be erected freely.

INDEPENDENT SCAFFOLD

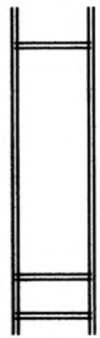

Independent scaffolds can be erected without connecting it to a building.

Independent scaffolds can be erected everywhere but are not as stable.

Do not overload scaffolds and be careful when working on it!

Modified chalkboard layout

The Overhead Projector

The overhead projector has gained more and more importance in every kind of theoretical training. This is also true for vocational training. Most organisations recognise this development and provide their facilitators and the teaching staff overhead projectors. This is however a problem where electricity is not available all the time or where there is only one projector available at the institution. The use of the projector is similar to the blackboard even though there are different advantages and disadvantages.

Advantages of The Overhead Projector

☞ *Projection*

The picture of the overhead projector can be projected to a screen anywhere in the classroom or to a fixed point and can be used in addition to the chalkboard.

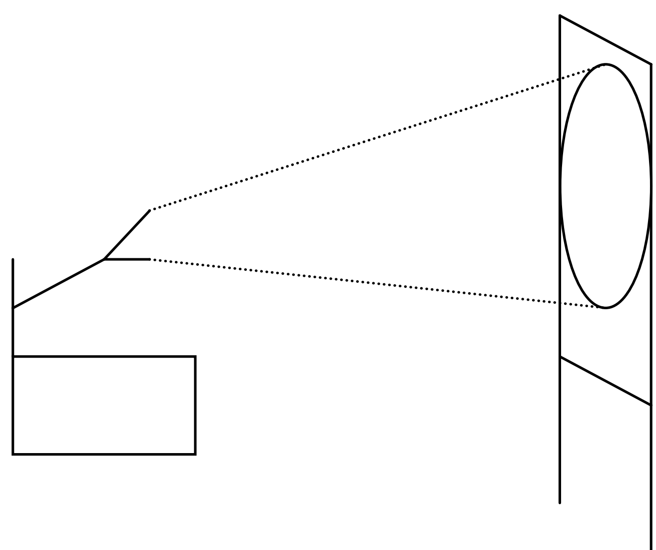

☞ *Teacher's Stands*

In contrast to the blackboard, the teacher does not have to turn around when writing onto the transparency and does not loose visual contact with the class. The transparencies are lying horizontal on the overhead projector and make writing easy and is therefore time-saving.

☞ *Multiple Use*

Transparencies can be used more often. Especially when reviewing a lesson a teacher can fall back on former transparencies. The transparencies are easy to store and therefore easily available.

☞ *Pre-Manufacturing*

Transparencies can be pre-manufactured at home without time pressure and one can thus achieve a perfect layout. Pre-manufactured models for several technical fields can be purchased.

☞ *Combination*

Transparencies can be used together with worksheets. This means that the teacher uses the worksheet as transparency and trainees can follow easily. When working with pre-manufactured transparencies and worksheets the teacher and the students can fill them together. In addition the trainer can explain things to the entire class by projecting the worksheet unto a transparency on the screen.

☞ *Attraction*

The bright light that will come from the overhead projector attracts the attention of the trainees automatically.

☞ *Variation*

The time for the information that will be given to the trainees can be flexible by switching the projector on and off. When switched off, the attention of the trainees will automatically return to the instructor.

☞ *Overlay*

The so-called overly-techniques means that transparencies can be covered and uncovered partly or completely by adding additional transparencies. These can be pre-manufactured too and allow the

instructor to concentrate on comments and explanations by reducing the writing job.
An extra advantage for the instructor is that with this technique, the covered part of a transparency is readable for the teacher on the projector table, but it does not appear on the screen so it is invisible to the students.
Additional information and help for the teacher can be written on the covering paper and is only visible to the trainer.

☞ *Group-work*

The students can use transparencies to write down the results of a group-work instead of using cards. At the end the results can be presented to the entire class by the use of the overhead projector.

☞ *Comfort*

The instructor can even sit when using the overhead projector.

☞ *Models*

Lesson models made of Plexiglas are available on the market and allow interesting and expressive demonstrations.

☞ *Size*

The size of the projected picture can be suited to the situation in the classroom, i.e. the size of the room or the number of trainees. Zooms can easily be done.

☞ *Additional Equipment*

Some producers of overhead projectors offer additional equipment for their sets, e.g. a device for the projection of slices.

Disadvantages of The Overhead Projector

☞ Availability

A regular and especially a spontaneous use of the overhead projector require that the equipment be easily available. This is only possible when an overhead projector is permanently present in every classroom. The projector is a sensitive machine and has to be protected from dust.

☞ *Overloading*

Transparencies, in particular when pre-manufactured, may lead to a fast presentation of information. In this case trainees are overtaxed because time for information processing is too short.

☞ *Practice*

The use of the overhead projector requires some practice. If not, there are several mistakes which can lead to confusion. When writing is too small or is done too fast it becomes unreadable. This can also happen, when the focus is not adjusted or the OHP is moved slightly so that the picture does not occur on the screen completely.

☞ *Guidance*

Concentration on the application of the OHP can suppress trainees thinking.

☞ *Price and Correspondence*

Industrial pre-manufactured transparencies and models are very expensive, difficult to get and often do not correspond with the plans of the teacher or the subject matter.

Remarks on The Use of The Overhead Projector (OHP)

Compared to other projectors the OHP's advantage is that the room does not need to be darkened. As a result the OHP is more or less unlimited in use. However, there are shortfalls. Because of its many positive features some teachers tend to overuse this device.

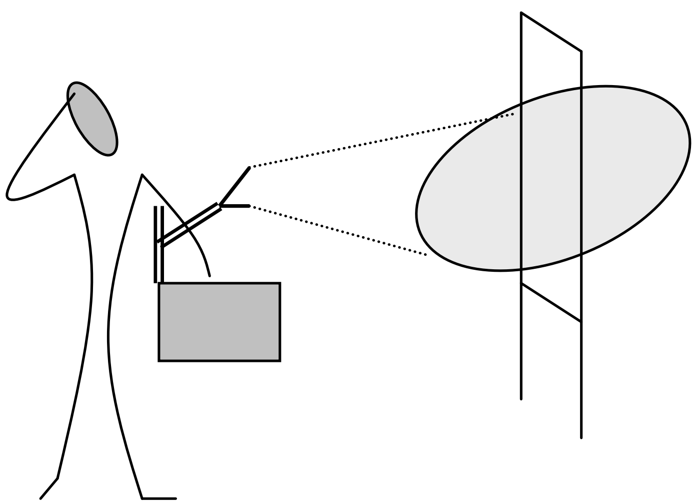

With an adjustable rack an OHP can be used while standing or sitting. Nevertheless the use of an OHP has to be trained. Since there is normally an average of 5 – 8 times zooming, a teacher has to practice and check how his writing appears on the screen. Since there is a projection through a mirror as part of the device, it is confusing when trying to move the transparency while visually controlling it on the screen. When an OHP is installed, mark the projection area, so that you are able to adjust the transparency correctly on the projection table. Almost every OHP has implemented pins where transparencies can be fixed. Therefore they have to be punched before. The projector has to stand in a 90° angle to the screen, so that the picture is not distorted. Dust on the lens and projection table reduces the intensity of the light and leads to fuzzy pictures.

An OHP offers plenty possibilities and attracts attention. Therefore plan its use properly. An OHP cannot and should not replace the chalkboard.

The Use of Charts

Charts can be of good help for a teacher especially when an OHP is not available. Drawings and tables put on the blackboard vanish after wiping it. But often the same charts can be used in several situations. Charts put in poster form can be used frequently. It is easy to store and sometimes charts might remain in a classroom for a longer period. If so, they should be protected with any transparency or even with transparent paint.

Charts should not be overloaded. Concentrate on key words and topics. What goes for all the teaching matter goes for the charts too: if the trainees developed it themselves it would have a much higher learning effect. The preparation of charts could be done when the results of a group-work have to be presented to the entire class. In the beginning the outcome of trainee-made charts might not be very satisfying. After some practice a lesson can benefit immensely from this work. It is sometimes surprising to see, how much creativity students develop when challenged with such a duty.

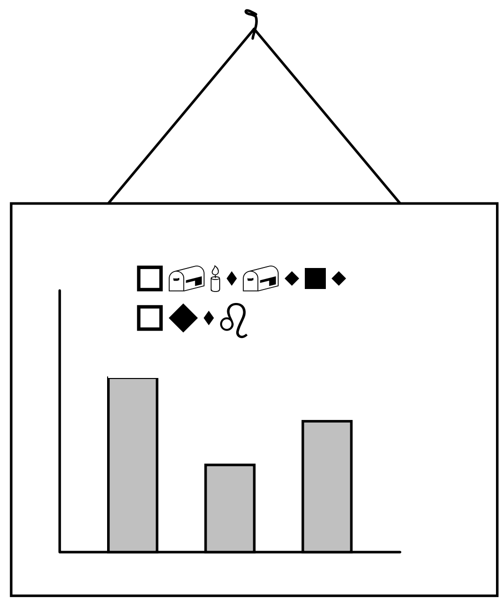

One problem that is discovered very often is the fact that charts or especially the text itself is too small. This is because it is usually written and drawn on a table and the “manufacturers” are very close to the object. When the chart is later on fixed on the wall, it might be difficult for trainees sitting in the last rows of the classroom to read. To avoid this, remember that the minimum size of letters should be 2 inches!

The Metaplan-Techniques

This is a method where one uses small cards of approximately 5 x 10 inches to write down key words and pin it on a pin-board later on. Normally it is used in group-work to summarise the results of the group. The group-leader pins the cards on the board one by one and gives additional explanations. Later on these cards can be rearranged or grouped differently, according to the intentions of the teacher. This procedure is even appropriate for collecting various ideas ("brain storming").

The example of our sample will be modified now. Trainees are not given the hint that several parties were involved in the accident (person, family, company), but were just asked to find out some consequences of an accident. Now the various groups came out with their ideas:

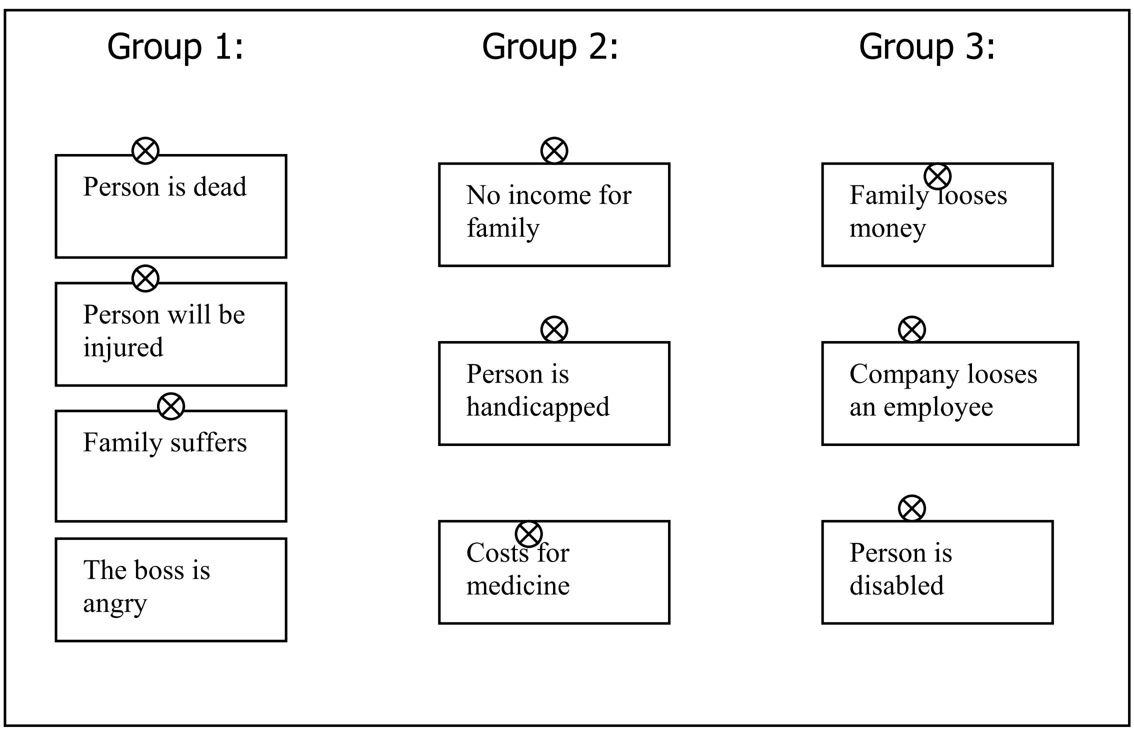

Now the teacher will ask the trainees to put cards with similar messages together. Then we will get the following layout on the pin-board:

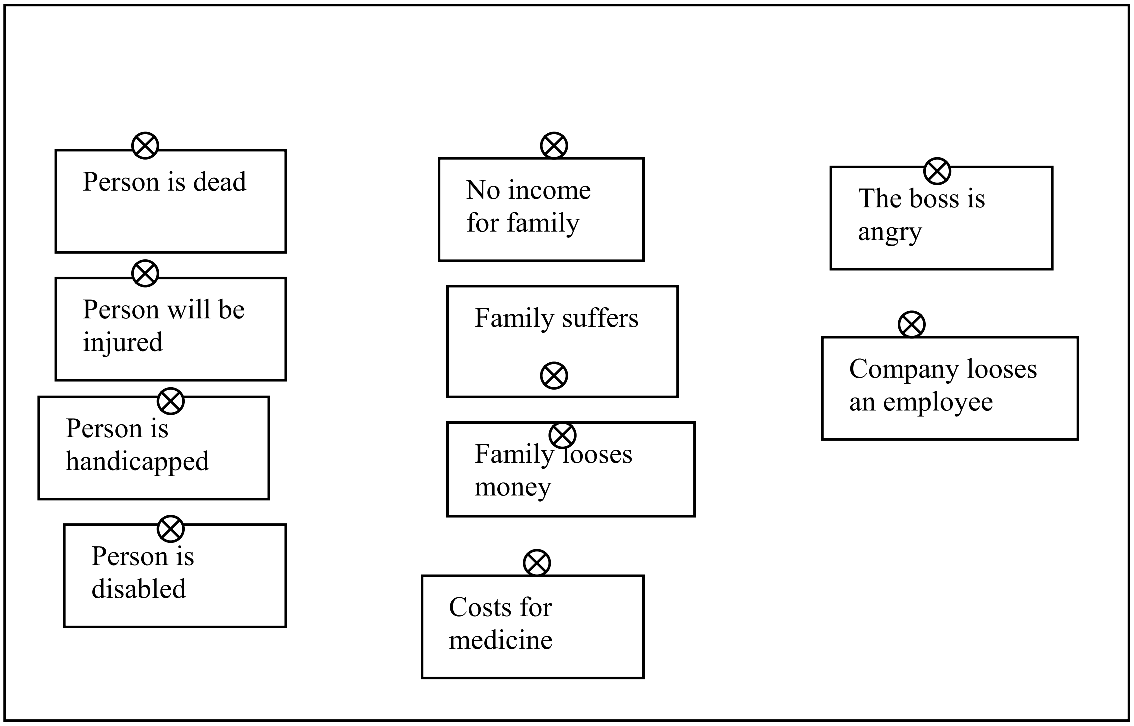

After this arrangement, the instructor asks the students to find headings for these three groups which will be affected when a person has an accident. The result will be; An accident affects the person him / herself, his / her family and his / her company. And this is exactly what the objective of the lesson is about.

Everyone can easily produce the cards. When there is no carton available, normal paper can be used. Even the use of cement bags for cutting cards was observed once. There is no limit on innovation! One marker is sufficient for every group and will last long because it will only be used for some key words.
This method does not require any material that is difficult to get or is expensive. The carpentry section can easily manufacture pin-boards.

The Use of A Work-Sheet

A work-sheet offers another possibility for all trainees to actively participate in the lesson. Some years ago it was the matrix duplication technique which initiated the appliance of work sheets. Nowadays photocopiers are available in almost every institute, the use of work-sheets have thus become popular. The sheets which are usually given to each trainee or to a group, come in three different variations: as information sheets, for check-up and as job orders. Information sheets can contain technical texts or copies of newspapers and technical journals, recipes (e.g. for cookery), charts tables and so on. Sheets for check-up customarily consist of the exercise that should be done, whereas job sheets carry the orders for a work that should be done. Some might not identify a big difference between the two last types. The check-up sheet is commonly utilised in examinations while the job sheet can be used in a group work. What is common to all is that it is the teacher who is duplicating and distributing it to the students.

Advantages of Work-Sheets

☞ *Easy updating*

Compared to textbooks a work sheet can be updated easily. In addition it can always be adjusted to the actual needs of the particular teaching situation while a textbook tries to cover a whole topic. Work sheets can be reduced to an understandable quantity of facts. In a nutshell, work sheets can be properly planned while didactic reduction is taken into consideration. Where textbooks are not available for the entire class, the work sheet becomes even very important.

☞ *Alleviation*

Work sheets have the advantage that trainees do not have to copy the notes from the chalkboard or transparency but have it already in printed form. Trainees therefore gain time which can be used for the task itself.

☞ *Flexibility*

When trainees are busy with reading or working the instructor can use the time to assist trainees individually or prepare the chalkboard's layout and so on.

☞ *Correctness*

Since it is prepared by the teacher, and later discussed in the class, a work sheet does not contain comprehension or spelling mistakes. It can be considered as a meaningful source for later repetition and learning.

☞ *Clarity*

Used as a job order, all the orders can be given exactly so that there are no misunderstandings and everybody can start working immediately. When everything is written down, trainees do not have to ask questions and therefore do not disturb other students.

☞ *Focus*

A work sheet normally ensures that the students concentrate on the task and work more intensively.

Disadvantages of Work Sheets

☞ *Overloading*

Many teachers want to make use of all the space that is on a work sheet and not to "waste" a single line. This will logically lead to the overtaxing of the students, because a clear structure will be lost and the user will be confused.

☞ *Availability*

Even though a photocopier is available at every centre, not every instructor might have easy access to the device. Sometimes it is the costs for maintenance and running costs that reduce the use of the copier machine.

☞ *Time*

A thorough preparation of a work sheet requires time. But what applies for the preparation of other teaching aids applies also for the work sheet; once prepared, it will serve you for long.

☞ *Organisation*

The use of work sheets in a class demand a more intensive planning of the lesson than an ordinary lesson does. Teachers with little experience in the use of media might find it difficult to use the work sheet in the beginning, because the class itself has to get used to it.

Annotations for The Use of Work Sheets

All the remarks made on the use of other teaching aids also apply to the use of work sheets. There is however one very important point to note: When using work sheets, make sure that every student is in possession of a file or folder to store all the distributed copies. To make storing easier, the papers should be punched before distribution. It is helpful for later use, to provide every sheet with an "information line", containing the subject, the teaching matter and the date of distribution.

Textbooks

The use of textbooks is unfortunately not very common in vocational training. Although technical books are on the market for almost every

common trade, their distribution is not widespread. The use of textbooks is very important and a helpful contribution to the general education. Every book has the same structure with hints on the author and publisher, the contents, the chapters themselves and the index and appendix at the end. The use of textbooks will open the mind to reading books.
When books are not available for the entire class on a permanent basis, they can be distributed e.g. to group-works. Usually trade textbooks contain every information that is necessary for the apprenticeship and can be helpful for many situations in the class. Tasks could be solved with the help of textbooks, statements can be proofed and entire topics can be read through and reinforced. Textbooks are, last not least, a useful media in preparing for an examination and self-study.
The use of textbooks is therefore highly recommended!

Models and Originals

Models do usually replace originals when the later are too big or too small (some devices or details have to be zoomed to become visible), not transportable, too expensive or for any other. Models and originals allow the students an intensive observation of the teaching matter. Long explanations can be replaced by handing the item around so that every student can have a proper look at it. They make abstract descriptions concrete. Models and specially modified originals give an idea about the device and give clarification about how the object functions.

During the lesson about accidents through electricity the question about the way a fuse works came up. First of all, an instructor can hand around an original or dismantled fuse so that everybody can look at it from a short distance. Secondly, a model can be easily prepared out of carton or wood and the function can be demonstrated impressively.

The Use of Slides

Slides are a very nice possibility to visualise things and situations. However, showing slides requires a slide projector, a good screen, and last not least, slides themselves. Due to changing technology it has become more and more difficult to get ready-made slide series which are up to date. An alternative to slides which is also quite effective are self-made photos. To produce them however demands photographic equipment and a lot of experience. This is one reason, why the use of slides in technical training has become rare. In addition when showing the slides the classroom has to be darkened. This is not easy in many

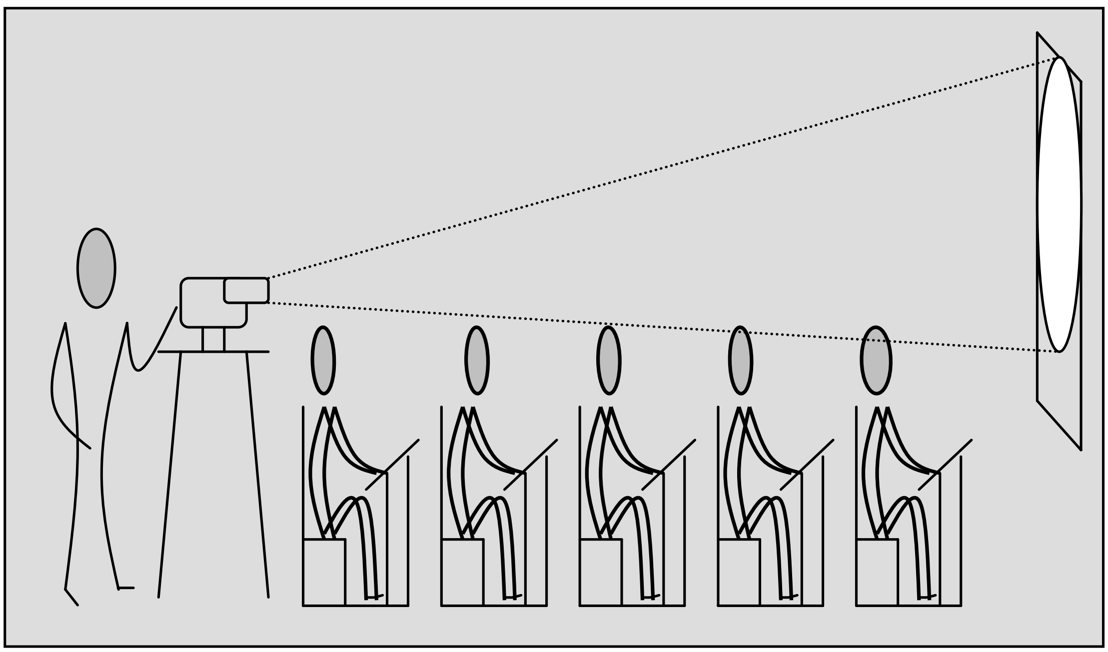

situations. With the development of digital cameras the widespread use of computers, it is much easier to print particular pictures on transparencies and show them with the help of the OHP. However, as it is with every new technique this is still quite expensive.
As a result of the above mentioned reasons, the use of slides in vocational training will not be explained in detail in this book.

12.2 Aural Teaching Aids

These are media commonly directed only to hearing. The tape or cassette recorder and the records or compact discs fall under this category. Technical education has rarely any kind of pre-manufactured aural aid that could support teaching. So they will not be commented.

12.3 Audio-Visual Teaching Aids

The name already suggests the senses these media address. It is both the sight and the hearing organs. In generally we get this in cinemas or on TV. The main difference is that the classic film has to be projected and comes with the same problems as the slide projection (see earlier chapter). In recent times it is the television mostly in combination with a video-recorder, which brings us information or even entertainment the audio-visual way. The advantage this device has is that normally it is placed on a movable rack and is so available quickly without much effort. In addition there is no need to darken the room to be used.
Companies and other organisations meanwhile offer a wide range of short, technical video-spots that can be very useful to illustrate and demonstrate complex procedures. There are even ready-made trick-shots to explain things that cannot be seen.
There are some points that should be adhered to when using the video.

☞ *Duration*

The films should be of short duration. Watching a film means that trainees return to the stage of receivers and are not actively involved. The importance of trainee involvement in the lesson has already been discussed extensively.

☞ *Contents*

Ready-made films (for e.g. from the construction industry) have also the intention of advertising. Not everything that is shown necessarily has to do with the topic of the lesson. A teacher has to watch and analyse the film intensively before showing it. He / she should be able to explain the contents and context of the film.

☞ *Relation*

A film must always refer to the topic of the lesson. Films which are of different trades or are just for entertainment do not have a place in teaching.

☞ *Presentation*

Films should be shown in sequences. Small breaks between the series have to be used for clarifications if necessary.

☞ *Level*

Films are exclusively useful when they are on the level of the trainees. If they are too difficult to understand they are no teaching aid because they aren't helping but confusing.

☞ *Facilities*

When using a video-recorder, make use of the technical facilities these devices offer, like slow motion and still frame.

☞ *Discussion*

Do not show a video without reviewing it. A teacher must ensure that everything that was shown was understood too.

12.4 Preparation of Teaching Aids

It was mentioned earlier that there are pre-manufactured media on the market. Normally we find three types.
The first group includes those produced by several companies of the trade. This means companies that produce a certain product for the trade (like bricks) and use it as promotion for this product. They are quite cheap or are available for free. Normally those ones are of good quality but do not only have informative character. They are produced and distributed because of public relation reasons too. Nowadays these are often videotapes.
A second type is professionally made media produced to make money. These are usually styled to reach a great number of customers and hence are commonly comprehensive. Often they are very costly.
The last stack are those which are produced by certain organisations, normally financed with public funds, for use in technical and vocational training. Usually they are given out on loan for only a short period. They are of high quality and in most cases very helpful. However, the procedure of borrowing them can be complicated and longwinded.
Consequently it is best to produce one's own teaching and learning resources. A teacher can prepare it according to the particular need and keep them for future use. There are certain criteria for a good teaching aid.

☞ *Price*

Media should be as cheap as possible. If it becomes too expensive for a teacher to produce teaching and learning resources he / she would stop doing it very soon. However, these media are not only helpful but also sometimes necessary. A transparency itself and two or three transparency-pens which are available as refillable ones already are all that is required. This is the same for charts. Once bought they will serve you for a long period. Models can be made of Paper or wood and are usually available at many centres. Photos can easily be copied on transparencies with every normal photocopier. With a normal size of pictures, one can get up to 6 pictures on one transparency with only one copying process.

☞ *Production*

It is the best when a teacher him / herself can construct the teaching aid. After a while everybody will get some experience and the preparation of teaching aids become easier. For sure other colleagues will assist with their skills and facilities (e.g. by using the machines in the carpentry section). The production should be easy to handle and should not take too much time. An instructor has to decide whether the relation between input (of time and energy) and output (improvement of learning) is justified.

☞ *Availability*

A media should be present when needed. This means that it either has to be stored in the classroom itself or somewhere where it can be fetched quickly. This includes the fact that it even has to be easy to carry. It should not be too big or too heavy, unless it is placed on a certain location where every teacher can go with the entire class to watch it.

☞ *Durability*

The more time the preparation of a teaching aid consumes the longer it should last. Therefore every media should be constructed such that it is stable, long lasting so that it does not get spoilt when stored for a long time. It should be almost maintenance free so that it can be utilised immediately and does not require extensive repairing.

☞ *Simplicity*

Often it is the simple and easy things that have the best effects. Sophisticated teaching aids might be an eye-catcher but overtax the trainees. Even the teacher can be overtaxed when a teaching aid is too complicated and not used frequently. The instructor may take it to the class but then realise that he / she has problems with the handling of the teaching aid. This goes in particular for the use of technical models.

☞ *Adaptation*

Media should be close to the reality of the students. Teaching and learning resource should help to explain things easier. A teaching aid that is out of the powers of a trainee's imagination is not very helpful. It might be interesting or attracting but not helpful. Adapted means furthermore that it is suitable for the circumstances and the culture.

☞ Relation

Never use a teaching aid for its own sake. The teaching aid and its use must always be related to the subject matter and the trade!

There is no general guideline for the preparation of teaching aids which tells an instructor how to prepare or when or which one to use. It mainly depends on the teacher's creativity and on his / her ideas. Ideas sometimes seem to come out of the blue and often at an inappropriate time. They vanish as fast as they came. A good teacher writes such an idea on a memo so that he can remember it later on. By so doing this teacher will very soon have a wide range of teaching aids at his / her disposal, which will make his / her teaching more lively, interesting and effective.

13 The Teacher's Question

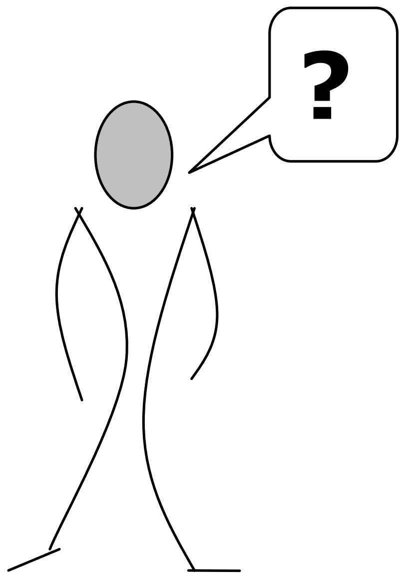

Questioning is the most frequently used way to start an interaction between the instructor and the students. Nevertheless the use of questions in a lesson is contradictory. Some educational scientist call it outdated; According to GAUDIG; "The teacher's question is the tool that has to be seen very critically. It kills spontaneity, it guides too much and is forcing the trainees…". Others see it differently. DIESTERWEG maintains that " The teacher's question is an artefact that a teacher never can make perfect, but should try to improve his whole life. The teacher's question is one of the most important tools the teacher has."

Whichever opinion we agree with, as long as questions are substantial in our teaching, we have to ensure that the questions we ask are useful.

According to ROESCH there are various types of questions, e.g. searching question, developing question, dismantling question and some more. However, irrespective of the type of question, there is one reason why we ask questions; we want to get an answer. This is either to have a contribution to the lesson that helps us to reach the objective or get a feedback on whether the students did understand the teaching matter or did not. Another reason for asking questions is examination. Further questions are only "fillers" and generally useless for a class.

13.1 Meaningless Questions

Many teachers are generally afraid of not having sufficient stuff for a lesson. Consequently many lessons are already overloaded.

Meaningless questions, used as fillers because of not having any positive aspect for the lesson, are additional load for the students. As the following examples show, most of these questions do not bring any progress in a lesson and hence are superfluous. So are the answers. Therefore the questions should not be asked at all or rephrased.

☞ *The "Nil-Effect-Question"*

Many teachers want to get a feedback on their teaching that is why they ask questions such as: "Did you understand?" or "Did you get me? or "Am I clear?". In Ghana, there was never any other answer than "Yes Sir / Madam". First of all this question is asked so frequently that students do not even think about it or recognise it as a serious question. They just answer automatically. A second reason for this answer is that many students are to shy to say "No Sir / Madam". In every course where teachers were confronted with this it became clear that the instructors were aware of this situation. Yet still instructors continue to ask such questions. What kind of feedback does an instructor expect when he asks a question and knows the students' answer already? There is no feedback at all! This question in vocational training is absolutely useless. Examples of the model lesson shall give us an idea on how to ask questions to check whether students understand or not.

The lesson has three objectives. Before moving forward to the next objective or the next step, a check-up is foreseen. Hence there are at least three situations where the teacher may want to get a feedback on his teaching. After objective one, we do not ask "Did you get me?" but;
"What were the reasons for the accidents mentioned in the newspaper?"
When you get the correct answer there is a positive feedback. Additionally it is repetition and so has a reinforcing effect on the learning process. When there is no correct answer it will show you that the students did not understand and you therefore have to repeat the chapter.

After the second objective the question is about the purpose of fuses. When trainees are able to explain it the instructor will know that trainees understood the information about the effects of an electrical shock.

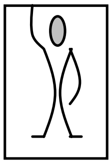

Try to formulate check-up questions for the third objective!

☞ *The "Directing-Question"*

This is a question where a particular answer is expected. It means that when posing the question the trainees are automatically urged to provide an answer which is somehow already included in the question itself.

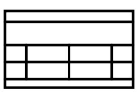

"Isn't it a good idea to use fuses?" When an instructor asks this question every student will answer "Yes, it is." What else should he / she answer. And what is the purpose of this question? It does not help the teacher nor the students. It is obvious that the trainer expects this answer. Hence asking questions such as this is useless. A better way is shown in our example; "Why do electricians use fuses?" This type of question urges the students to think about it. There is no answer included. The trainees have got to show what they can do. A correct answer from the students gives the teacher a positive feedback too.

☞ *The "Definition-Question"*

This type of question usually starts with; "What is a…". Hence the answer has to be a kind of definition. In an earlier chapter the difficulties that come with definitions were already explained and therefore will not be repeated again. (See chapter 8.3)

13.2 Characteristics of Effective Questioning

The following rules will help ensure that the output after asking a question is high.

☞ *All questions require thought*

To use a question as an effective "tool" during a class, it should be well planned. This is not always possible because sometimes the teacher has to react to situations during the class. He has to ask questions spontaneously. However, an instructor should always take some time to phrase a question properly. The better the question, the better the answers!

☞ *Starting a question*

Every question should start with a question word like when, why, how etc. Another way to start a question is to use words which were already introduced like summarise, justify, describe, explain, define, compare illustrate etc.

☞ *Simplicity*

Questions should be clear and easily understandable. Too complicated questions overtax the trainees. When they have difficulties understanding a question, trainees cannot concentrate on finding an answer. When you do not get any answer to a question, think about whether your question was precise enough.

☞ *Logical sequence*

Not every question is of the same level. Some are easy, others are more difficult. Arrange questions in a logical sequence. Easy questions should come before difficult ones.

☞ *Avoid "multi-questions"*

Ask only one question in one sentence! A Question like "Why and when do electricians use fuses" are "double-questions". It is only one sentence but contains two questions. Trainees usually have difficulties to concentrate or think about two things at the same time.

13.3 The questioning procedure

It is not only the question itself that is the deciding factor for getting a useful contribution to the lesson. The behaviour of the instructor when asking a question is important too.

☞ *Ask the question to the entire group*

Do not start a question by calling on one student to provide an answer. For example: "Michael, please tell us why faulty cables are dangerous". This will lead to the situation where only Michael thinks about the question. The rest of the class do not feel addressed. For them it is Michael's problem now and they will relax.

☞ *Wait for some seconds*

Do not call the first student who raises his / her hand immediately. This would interrupt the other trainees' thinking. Force yourself to observe some seconds of silence. Everybody will thus be able to concentrate and think.

☞ *Listen to the answer*

Look at the person while he / she is answering. It gives a feeling that the answer is important and will encourage all students to active participation. Not paying attention will have the contradictory effect. Trainees will get the feeling that the instructor is not very interested in the answer and will stop thinking about future questions.

☞ *React on the answer*

Never leave any question uncommented. It is very important for the entire class to know whether an answer was correct or not. Praise students for good answers but do not blame somebody for a wrong answer. This is discouraging.

☞ *Complete sentences*

Urge trainees to answer in a full sentence. It will help to improve their English.

☞ *Spread questions*

Use simple questions to involve trainees who are low-achievers. Direct the difficult questions to the high-achievers. By doing so, you give the entire class the chance to participate.

14 Testing and marking

One of the most important and most sensitive responsibilities of an instructor is testing and marking. Some might say it is the same as check-up. However, it is not. Check-up can be regarded as a general topic for the following three areas: checking of understanding, reinforcement of the learning matter, and testing and marking. Even though it is not very obvious, there is a difference between these two fields.

☞ *Checking of understanding*

The teacher who wishes to find out whether the taught knowledge has been understood uses this. It is usually conducted during and at the end of a lesson by written, oral or practical tests. It is useful for the trainee and enables the instructor to review the effectiveness of his teaching methods. The trainee himself will recognise whether he is on the actual required level or not. Its main task is to give a feedback on the teaching-learning process and progress.
The written check-up can be divided into two groups. We have the open or unrestricted answer and the restricted answer (some educational scientists add a third type, namely the half-restricted answer). The type of answers the instructor chooses depends on the objective. Unrestricted answers are used for the level *transfer* and *problem solving.* The questions should come with the verbs, which represent this level. (See 7.2.2.3!)

☞ *Reinforcement of the learning matter*

This type of check-up seeks to promote the learning process. It was described as the transfer of knowledge into the long-term memory in chapter 5. It can be achieved by a repetition of the learning matter, practise and application. We have already discussed the psychological aspects.

☞ *Testing and marking*

It can also be called examination. It is the process when the achievement of the trainees are tested and certified. Testing and marking is the main concern of this chapter.

14.1 Basic Issues

In the beginning it was mentioned that marking is a very sensitive issue. When trainees get the feeling that the marks they were given are not justified, a bad mood may come up in the class. The relation between the instructor and the students may deteriorate. However, testing and marking is inevitable. It has several functions.

☞ *Feed-back*

Marks are information for the teacher and the students. The teacher can form an impression about the quality of his / her teaching. When the average results of the entire class are very low the reason might not be an inferior achievement of the trainees. It can even be that the style of teaching is on a low level. Trainees too get a feed-back by marks. They can compare it with those of their classmates and see on which level they are.

☞ *Information*

Certificates containing marks offer employers the opportunity to make their mind about the achievements of the applicant. Parents also get information about the level of their child. Furthermore, it gives information whether somebody has the ability to enter the higher educational system or to stay in his / her job.

☞ *Motivation*

Good marks as well as bad marks can motivate trainees to learn more for the next test. While good marks normally are a challenge to the trainees him / herself, bad marks put pressure on the student. Usually it is the parents who urge a child to learn more intensively.

☞ *Disciplinary measure*

Some instructors use marking as a method of punishing trainees when there are disciplinary problems in the class. From a pedagogical point of view this has to be abolished. Misusing marking for this purpose is a bad habit and a sign that the teacher is overtaxed. This unfair procedure humiliates the trainees and leads to mistrust and frustration.

14.2 The Quality of Testing And Marking

The most discouraging thing for a trainee is to be unable to perceive why he / she got a particular mark. When the mark is bad it is important for the trainee that the outcome of the mark is transparent. There are three main criteria for testing and marking: objectivity, validity and reliability.

Objectivity

This concerns mainly the teacher as a person. Sometimes instructors are influenced by a trainee's habit and may have prejudices against a student. These can be positive as well as negative. When they are positive a teacher might give a better mark to the trainee he likes, even though the answers are very similar to those of another trainee. When they are negatively influenced it may have a contradictory outcome. High objectivity exists when the marks of different teachers for a particular exercise of one particular student are equal.

Validity

A test always has to refer to the teaching matter. Only what was taught during a lesson should be examined. When marking, a teacher must not consider any good or bad contribution of a trainee. Sometimes when trainees are not able to answer a question correctly they write anything they know about the topic. However, since it is not the correct answer it has to be neglected.
Furthermore, it is important that the examination is set at the level of the trainees' knowledge.

Reliability

A test should bring results that are reliable. This means that the results of the trainees' examinations should represent the actual level of knowledge. Where every trainee is asked questions from a different field the test becomes unreliable. If there is only a single question in the whole test, the results cannot be representative. Similarly, when you ask only the people of one town, whether they like sports one cannot use the results to give a statement which applies to the whole nation. Asking the whole nation whether they like football does not mean that they do like other sports as well.

14.3 Types of Tests

All tests should fulfil the above mentioned criteria for tests of good quality. In vocational training we have three types of tests: the written test, the oral test and the practical test.

The written test

What is meant by a written test is normally the procedure where the entire class gets the same test. It usually takes place in the classroom under the supervision of a teacher. This form of testing gives equal conditions for every student and consequently leads to an objective assessment.

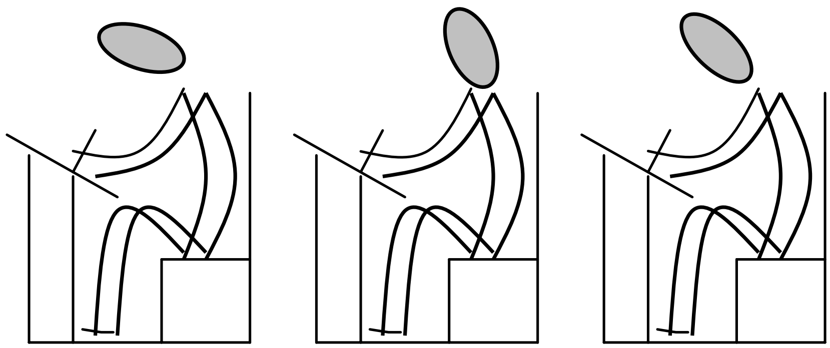

There should be silence during the testing period. This allows everybody to concentrate on his / her work. The trainee is expected to manage the time him / herself and think about the questions. He / she does not necessarily have to answer according to the order of the questions. Hence trainees can answers "easy" questions first. This gives self-confidence for the more difficult ones. A trainee can collect his thoughts and write them down when he / she is sure about the answer. Normally trainees are not allowed to ask questions during the test and this has to be regarded as a disadvantage. Furthermore, a trainee does not get a feedback to his answers during the test.

Preparation of a Written Test

A written test is not only a test but a test of the teaching matter. A major concern therefore is that the questions should refer to the objectives of the lessons.
Some points shall give guidelines for the preparation of a written test:

☞ *Determination of the test objectives*

Make a clear statement on the area of the teaching matter which will be tested. Do not examine knowledge which was treated in the distant past or which does not belong to the subject. The tested matter should have been treated sufficiently within the class. Make sure that you know the intended results. It is good to prepare a suggested solution before the test starts. It should not only contain the correct answers but also the score for the correct answer!

☞ *Representative questions*

Inform trainees about the intention of the examination. The issues to be emphasised should be obvious. Questions should cover all the areas that a teacher declared relevant for the test.

☞ *Characteristics of questions*

Questions have to be clear, precise and easily understood. Avoid “double-questions”! There should be no room for misunderstandings. Use only words that every trainee understands. Choose an average level of difficulty for the questions.

☞ *Quantity of questions*

The more questions a test contains the more objective it becomes.

☞ *Determination of the time limit*

It will enable the trainees to manage the available time. Take the weak students into consideration when giving the time limit. Do not give too much time. Usually it shouldn’t take a trainee more than twice the time the instructor needs to answer the questions.

Types of questions

There are two main types of questions that are used in tests; Essay questions and short-answer questions. The short answer questions are further divided into two groups; questions with restricted answers and questions with free-choice answers. The last group has again three sub-groups; true-false, multiple choice and association.

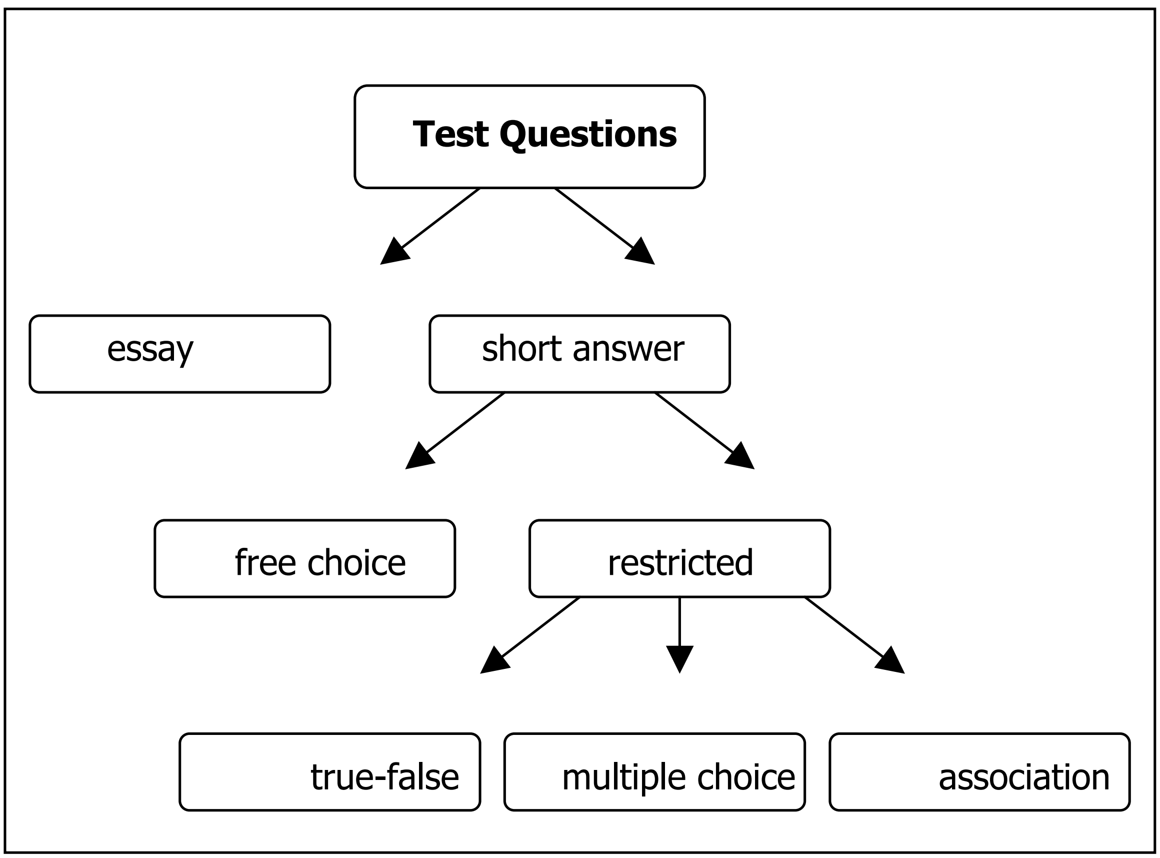

A) Essay Questions

An essay question has to be answered with a comprehensive statement.

"Discuss all the consequences of an accident through electricity!" This question cannot be answered with one word. He / she has to find the answers and bring them into form by writing a full essay.

This is a task that is on a high level. It urges the students to express themselves, which helps to develop their language. Furthermore, it has the advantage that trainees have to deal with the whole subject matter and this informs the teacher about the general understanding of the trainees. The teacher doesn't require much time to prepare a test with questions like this. However, there are disadvantages too. Essay questions require a certain level of linguistic ability. Some trainees might know the answers, but are not able to write them on paper because of lack of writing talent or poor knowledge of the English language. It is more difficult for an instructor to assess essays than short answers. Essays usually have always room for interpretations. Two different teachers can assess the same test differently. In addition, essays tend to be assessed according to their grammatical quality rather than according to their contents. It is difficult to guarantee reliability and validity. Consequently, essay questions should never be used exclusively in one test but supplemented with short-answer questions. For low-achievers, essay questions are difficult to answer.

B) Short-Answer Questions

These type of questions requires only short answers. These can be given in a free form or in a restricted form.

B1) Free Choice Questions

These type of questions forces the trainees to express themselves freely, but with only a few words or even drawings.

"Name one safety regulation!" Trainees should not give an own statement because the answer was given word for word within the lesson. However, there is still a "writing-job" to do. The answer to this type of questions can still be lowered, to enable even low achievers to answer correctly. For e.g.; "Complete the following sentence: When people get an electrical shock, currents ...."

B2) Restricted Answers Questions

Unlike the free choice type where the correct answer has still to come from the trainee him / herself, the restricted type includes the correct answer in the list of possibilities. It is the trainee's job to find the correct answer out of various possibilities.

There are three types of restricted answer questions.

- **True-False Type**

The trainees have to decide whether a given statement is true or false.

"A faulty cable can cause an accident. True ore false?"

A big disadvantage of this type of questions is that there is no room for creativity. Furthermore the chance even for an ignorant student to answer correctly is 50 %.

- **The Multiple Choice Type**

This type offers various answers to one question. Trainees have to find out the correct one.

"How can electricity support our work?
a) it raises the quality of the job
b) it makes the products more valuable
c) it makes machines run"

For this type of questions it is important that the false alternative answers are plausible too. It wouldn't really be a question if the alternatives to the correct answers were like this;

a) I can connect my portable FM receiver
b) I can recharge the batteries for my torchlight
c) It makes machines run

The alternative answers should make sense and should not clearly show the correct answer. Even with this type of questions, trainees shall be urged to think about the correct answer. Therefore it is necessary for all answers to be very similar in length and form to the correct one. Furthermore it is necessary that the position of the correct answer varies (not always c!). Sometimes there are multiple choice questions where more than one answer is possible. This makes answering very difficult and is not convenient for vocational training.

- **The Association Type**

Several information has to be brought together in the correct form.

Bring the right components together!

1) the company	a) loss of income
2) the family	b) severe injury
3) the person	c) loss of employee

The complete information on one objective is given already. Students now have to make the right links.

What goes for all types of restricted answers is that the assessment of the answers is quick and easy. However, the preparation of such tests is time consuming. Additionally, there is no room for creativity and all restricted answers allow a certain random chance for success. Finally, these tests are used for the lower level.

Fair Marking

It was mentioned already that testing and especially marking is a very sensitive task. The worst thing that can happen is for trainees to get the feeling that the test or the marks given are unjust. Trainees might be angry for a while when a test is very difficult but they soon forget this. Trainees will never forget unfairness! Some ideas can help to come to make the results objective.

☞ *Amount of tests*

The more tests, the better it is for the trainees. If there is only one test a year, a trainee who was in a bad mood on this day, might get a low mark and find it difficult to make up for this. If there are more tests, one bad mark doesn't count too much.

☞ *Objectivity*

Nobody is absolutely free from prejudices. But neither positive nor negative prejudices should influence a teacher when reviewing tests. Before starting a written test make small pieces of paper and write numbers on it according to the amount of trainees in the class. Distribute these note pads among trainees and tell them everybody should write his / her name on one of these papers and remember the number. Then collect these note pads and store them properly. Now tell the students they should not write their name on the examination but the number. Then write the test and review it. After marking it, take the stored note pads with names and numbers and assign the names to the numbers on the examinations.

☞ *Suggested / sample solution*

It is obligatory to prepare a suggested solution before running the test. It has to contain the answers and the scores (see example!).

☞ *Transparency*

All assessments have to be provable. The teacher must be able to explain his decision properly. It must therefore be possible to appreciate and understand the standards being used.

Test on DANGERS THROUGH ELECTRICITY

Time limit: 15 min. max score: 29 p. Student's number: ___

---

1. How can electricity support our work? Tick the right answer !(2 p.)

    a) it raises the quality of the job
    b) it makes the products more valuable
    c) it makes machines run

2. How can electricity cause an accident? Give two reasons! (8 p.)

a) ____

b) ____

3. An accident has many consequences. Bring the right components together! (6 p.)

1) the company	a) loss of income
2) the family	b) severe injury
3) the person	c) loss of employee

4. Complete the following sentence (3 p.):
When someone gets an electrical shock, currents ____________________

____

5. Name two safety regulations! (8 p.)

a) ____

b) ____

Test on DANGERS THROUGH ELECTRICITY

Time limit: 15 min. max score: 29 p. ***Suggested solution***

---

1. How can electricity support our work? Tick the right answer! (2 p.)

a) it raises the quality of the job
b) it makes the products more valuable
c) it makes machines run

2. How can electricity cause an accident? Give two reasons! (8 p.)

a) *Through the carelessness of people*
b) *Through cables that are faulty*

3. An accident has many consequences. Bring the right components together! (6 p.)

1) the company	a) loss of income	*1+c*
2) the family	b) severe injury	*2+a*
3) the person	c) loss of employee	*3+b*

4. Complete the following sentence (3 p.):
When someone gets an electrical shock, currents *flows through the body and injures the person*

5. Name two safety regulations! (8 p.)

a) *Checking machines before using it*
b) *Never drink alcohol during working hours*

Score:
29-26 = A 25– 20 = B 19 – 14 = C 13 – 0 = D

Oral Tests

Oral tests are usually only for one single student at the time. The same conditions cannot been guaranteed for every candidate. In addition, the tendency to falsify the judgement because of feelings of sympathy or antipathy is higher than in written tests.

An oral test does not allow anonymity. However, there are advantages too. By using additional questions a teacher can give trainees some assistance during the testing period. There is an immediate feedback for the trainee through the reaction of the questioner. Last not least, it is easier to find out whether a trainee is just able to repeat information which he has learnt by heart or whether he understood the context of the subject matter. There are some dos and don'ts for oral testing.

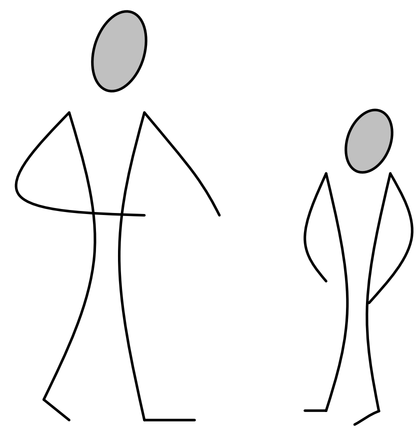

☞ Try to create a positive atmosphere by being friendly and relaxed.

☞ Start with a smart small-talk and do not start immediately with test questions.

☞ Ask easy questions in the beginning. The candidate will get self-confidence.

☞ Do not deal too long with questions a trainee cannot answer.

☞ Confirm correct answers and praise as much as possible.

☞ Write down the questions which you want to ask.

☞ Make sure that you can explain your decisions.

☞ Finally respect all basic issues that go for every question.

Practical Tests

Practical tests are essential in technical education. It is not only the theoretical knowledge that is important for a craftsman but the practical skills in particular. It is not very easy to offer every trainee equal conditions but one should try hard to give everybody his / her chance.

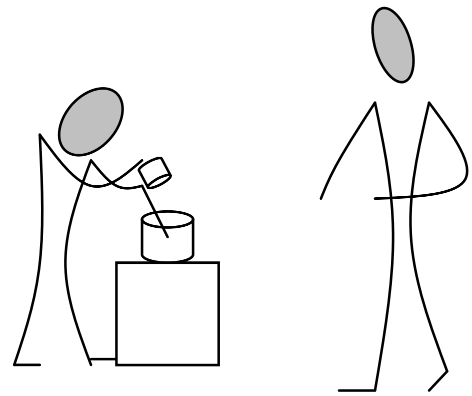

How to Conduct a Practical Test

(from: "Runkel – How do I test and examine and how do I give marks")

There are special considerations that have to be taken into consideration when testing practical achievements. The test should follow three steps.

☞ *Phrasing of the task*

It has to describe exactly which concrete task the candidate has to fulfil.

☞ *Requirements*

It has to determine which functions the object has to fulfil when completed. Furthermore, this part can contain hints and roles for tools or material to be used. The time limit should be given.

☞ *Suggestions for the solution*

Sometimes there are many roads to success. However there might be one that is the most effective. It can make assessment easier.

That information has to be given to the trainees before the examination.

Example for a practical test

Terms of Reference

Task

The opening in an installation shaft has to be covered by a suitable wooden flap. Behind it there are stop valves for a central water supply system. The opening is located in the corridor of a classroom building. Access must be possible for occasional maintenance work or in case of emergency.

Requirements

The flap must
☞ be accessible without the use of a tool or a key
☞ have an easy-to-maintain permanent surface
☞ blend optically into the overall appearance of the building (bright colour)
☞ be easy to produce for mass production
☞ not affect the function of the adjacent door when opened
☞ be capable of being manufactured in a period of approximately 4 hours in a medium-sized machine workshop

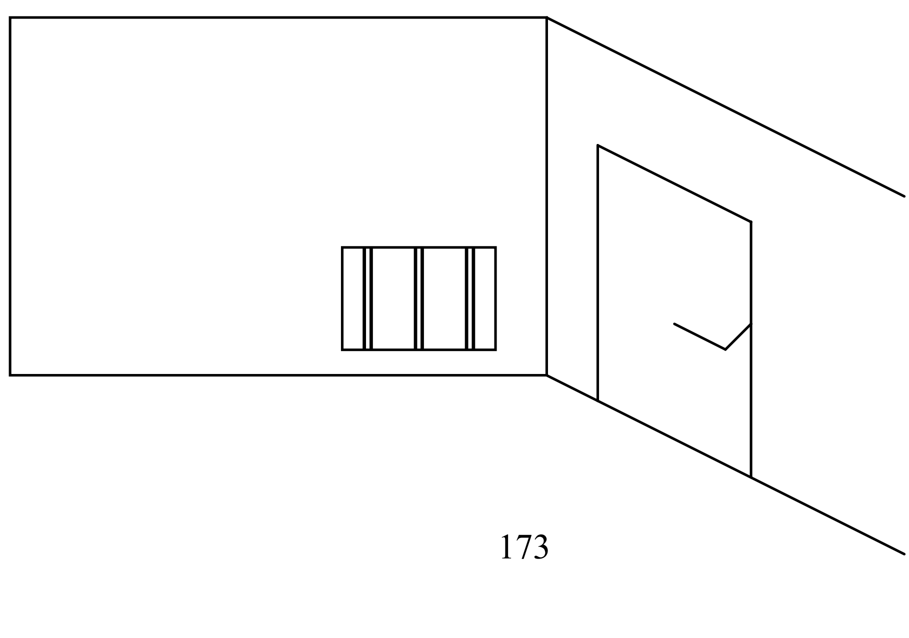

Details:

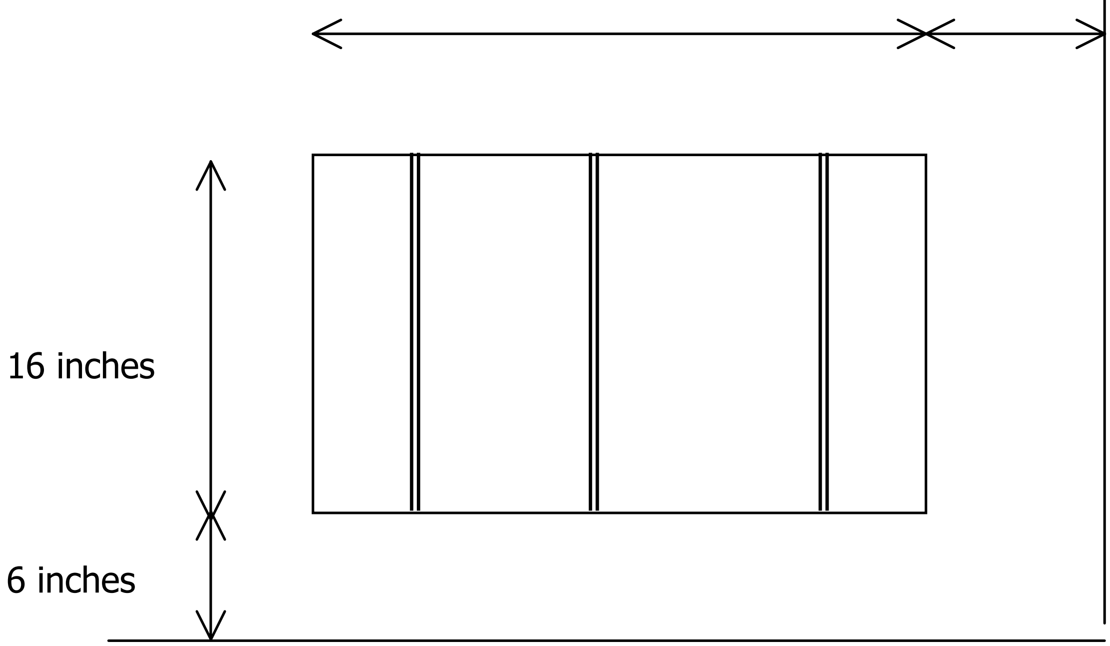

Thickness of the wall without plaster: 10 inches.

Suggestion

- ☞ Produce a drawing of the installation layout
- ☞ Select suitable materials
- ☞ Decide on hinging, retaining mechanism and hardware
- ☞ Determine machines to be used
- ☞ Manufacture the fame
- ☞ Manufacture the flap
- ☞ Assemble parts, incl. mounting hardware with functional test.

Assessment of the test object

When the time limit is over, the manufactured test objects have to be assessed. It is helpful to break down the analyses of the job into specific minor aspects, which are assessed individually. It is not only the general impression of the manufactured item that has to be proved but even singular parts that later on cumulate to a final score. It is obligatory to create an evaluation sheet that will guide you during the assessment and guarantee a fair and equal treatment of each student.

Evaluation features	*Solution to be achieved*	*Max. score*
Suitability of hand drawing	Overall drawing of installation layout, individual view of functioning components flap, frame	5
Choice of material, price, possibility of working and use of machine	Ready-coated ply-wood, 19 mm thick, edges with glued strip	20
Design	Flap opening upwards, angle of opening > 160°, magnetic catch on both sides, handle recessed	15
Dimensional accuracy of components	Dimensions must be selected so that material tolerance have no influence	15
Quality of working	Exact angles, clean working of edges, perfect mounting of hardware	15
Easy installation of solution	Fixing by means of countersunk screws and cover plate through outer frame	5
Easy functioning	It must be possible to open flap without tools or key, movable parts must have enough play	10
Production time	Overall time approx. 3.5 hours	15
Total		*100*

For a practical test it is always recommended that not only one but at least two persons examine the manufactured objects!

For hard copy order: ISBN : 3897741245

Contact to the author: schrembs@gmx.com

INNOVATIVE APPROACHES TO TEACHER TRAINING IN VOCATIONAL EDUCATION IN GERMANY:

The Vocational Education Teacher Training Institute (VETTI) in Cologne

Report to

German Technical Cooperation (GTZ-CRYSTAL)

Michael Axmann
Kürten, Germany

27 March, 2002

Table of Contents

List of Boxes:

List of Annexes:

List of Tables:

Explanations and Definitions (*German expressions in italics*) used in the VETTI in Cologne	
Accompanying Program (*Begleitprogramm*)	Bi-weekly program in each vocational school
Advisory Groups (*Beratungsgruppen*)	Support groups in vocational schools
Annual Didactical Planning (*Didaktische Jahresplanung*)	Interdisciplinary planning done by all the teachers in one vocational class at the beginning of the school year
Biographical self-reflection	Starting point of teacher training in Cologne
Cooperative Reflection Counseling (*Kollegiale Praxisberatung*)	Counseling approach used in Cologne for giving feed back to junior teachers
Economics and Business Administration (*Wirtschaftswissenschaften*)	Training given in one field-related group
Essentials	Key areas of teacher training covered in courses on general vocational pedagogy and didactics
Extra Curricular Courses	Voluntary courses offered by teacher trainers in Cologne
Field-related Groups (*Fachseminare*)	Teacher training groups in the field of major and minor of university studies
First State Board Exam (*1. Staatsprüfung*)	Exam at the end of 4-6 years of university studies for teachers
Future Lab (*Zukunftswerkstatt*)	Teaching method developed by R. Jung to bring out creative potential in people
Groups for General Vocational Pedagogy and Didactics (*Hauptseminare*)	Main courses dealing with all aspects of teacher training
Key Qualifications	New requirements to be met in the labor market
Legal Framework of Vocational Teacher Education (*OVP und Seminarrahmenkonzept*)	Binding framework developed by the Ministry of Education in NRW
North-Rhine Westphalia (*NRW*)	A state (*Land*) in Germany
Planning and Development Talk (*Planungs- und Entwicklungsgespräch*)	Counseling talk with each junior teacher halfway through the program
Peer Groups	Teacher junior teacher groups from different schools and with different backgrounds that meet regularly
Project Groups	Collaborative efforts between teacher trainers, school staff and junior trainers
Reflection Learning (*Handlungsorientierung*)	New approach in vocational education based on whole cycles of learning
Scenario Technique	Teaching method that can deliver pictures of future situations
Second State Board Exam (*2. Staatsprüfung*)	Exam at the end of the in-service teacher training
Self-organization	One of the three pillars of the program apart from teamwork and combining theoretical and practical aspects of teaching
Simulated Enterprise Offices (*Lernbüros*)	Simulation of work in a wholesaling company
Supervised Trial-run Teaching Situations (*Unterrichtsbesuche*)	Teaching experiments of junior teachers in their schools in the presence of teacher trainers and peers
Teacher Functions (*Lehrerfunktionen*)	Besides teaching they are counseling, educating, organizing, inventing and grading
Teacher Trainers in the Institute (*Haupt- und Fachseminarleiter*)	Senior trainers who work both in the institute and in schools
Teacher Training Mentors at Vocational Schools (*Ausbildungskoordinatoren*)	Trainers at vocational schools who look after teacher junior teachers
Teaching Observation Sheets	Worksheet for taking notes during teaching experiments

Abstract

In response to changes in the world of work and new requirements in the labor markets, new initiatives in teacher training have been launched in Cologne, Germany. The present report is based on the extensive experience of the author in one of these initiatives in the Vocational Education Teacher Training Institute (*Studienseminar für das Lehramt an berufsbildenden Schulen*) there.

The strategy and three components of in-service vocational teacher training - self-organization, combining theoretical and practical aspects of teaching, and teamwork - are described in this report. This approach is in line with current best practice in Germany and illustrates a comprehensive package of interventions in a two-year program leading to a state board exam.

Priority components for training interventions include: institutionalized linkages with key players in teacher training, "essentials" of teacher training, "reflection learning" – approaches (*Handlungsorientierung*), and trial-run teaching situations.

Future teachers in vocational education will have new roles that require working in groups and teamwork: not only as teachers but also as counselors in vocational education, inventors, educators, organizers and administrators.

Monitoring and evaluation mechanisms by teacher trainers as well as junior teachers and vocational schools have been put in place for quality control.

Acknowledgements

This report was written after having worked in the vocational teacher training institute in Cologne for a number of years. It is based on documents and papers that have been developed by all the teacher trainers in the Cologne institute in all the technical and commercial facets of vocational education. However, this report puts the emphasis on my own experience as a teacher trainer in economics and business administration.

In particular the author would like to express his thanks for the guidance and the support received from the Director of the Vocational Education Teacher Training Institute (VETTI) in Cologne, Mr. J.Martin Thees.

I would also like to thank a former junior teacher of mine, Ms. Anja v.d. Haar, who has written down her view of the training in the institute from a junior teacher's perspective.

Finally, I would like to thank GTZ for letting me put this report into the CRYSTAL-platform and therefore reach a wide audience interested in German teacher training in vocational education.

Executive Summary– Why You Should Read and Download This!

The enormous changes that have taken place in the world of work in the last 10-15 years have led to the restructuring of vocational education in Germany, putting a stronger focus on “key qualifications”, on techniques of “reflection learning”[1] and on setting up new teacher training programs in vocational education.

This paper describes the results of this restructuring of vocational education teacher training in one State (*Land*) in Germany, North-Rhine Westphalia (NRW), and specifically in the Cologne Vocational Education Teacher Training Institute (VETTI) (*Studienseminar fur das Lehramt an Berufsbildenden Schulen*). Many of the practices described are similar in Cologne and NRW and indeed throughout the German *Länder*; however it should be kept in mind that education is a State (*Land*) responsibility and what is described here may not be identical in every part of Germany.

This paper highlights a number of experiences where the VETTI approach could be relevant for other countries that wish to reform their vocational education teacher training systems, including:

- A two-year teacher training program that builds on university studies and internships and focuses on the three essential pillars of cooperation, teamwork, and the use of reflection and self-reflection techniques in meeting new pedagogical, technical, commercial and information technology (IT) challenges;

- Changing needs in labor markets and changing needs in vocational schools which have led to new teacher training programs being planned and developed that are able to deal flexibly with restructuring challenges in vocational education;

- A legal and didactical framework that emphasizes the joint role of **both** vocational schools **and** vocational education teacher training institutes in in-service teacher training and reflects how curricula for teacher training have been revised in the light of the new requirements in vocational schools;

- Organizing in-service teacher training as a collaborative effort among schools, the vocational education teacher training institute, and junior teachers;

- Focus on “key qualifications”, or “essentials”, as they are called in the Cologne VETTI, that will help both junior teachers in their “labor markets” (the

[1] “Reflection Learning” as it is used here refers to the German “*Handlungsorientierung*” and means learning processes that are relevant for learners, that stress comprehensive and joint planning in groups, and that produce planning strategies that take concrete actions and finally evaluate the results. The English term “reflection learning” was to my knowledge first used by SIEMENS – Germany. In the paper “Coaching of Self-Organized Teamwork” (2002), which D. Hermanns did in the GTZ-CRYSTAL platform, it is explained in more detail.

vocational schools), as well as vocational students after graduation in their labor markets in industry, services or agriculture;

- In taking a group and teamwork approach, the VETTI in Cologne succeeded in dropping the spoon-feeding approach in teacher training and instead helping junior teachers to take their own process of "learning-and-becoming-teachers" in their own hands and thus responding in a very effective way to the challenges in vocational education in a changing world of work;

- A heavy emphasis on trial-runs in teaching to meet different objectives throughout a two-year program in a system that uses number of different feedback techniques that combine both theoretical and practical aspects in learning situations that have real-life importance and are fun; and

- Monitoring and evaluation mechanisms established for quality control purposes that provide useful feedback for everyone involved in the teacher training program.

The two stages of vocational teacher training in NRW are described in Chapter 2:

- University studies of 4-6 years in major and minor subjects, as well as pedagogy; and
- A two-year in-service junior teacher training program at a vocational education teacher training institute (VETTI) like that in Cologne[2], combining working as a teacher in a vocational school with weekly seminars in the major and minor subjects.

The emphasis of the two-year program in Cologne is on shaping each junior teacher's teaching character, by focusing on the three pillars of: (1) self-organization, (2) combining practical and theoretical aspects and (3) teamwork.

The legal framework for in-service vocational teacher training, set up by the Ministry of Education, is explained and its implications and the main didactical principles for the teacher training program are described (Chapter 3).

Teacher training takes place in different training venues and is divided into: (1) teaching and training in the schools; (2) the Accompanying Program set up by the schools; (3) cooperative training sessions between the institute and the schools; (4) peer group work; (4) and finally, of course, extensive training in the VETTI. All these activities plus extra-curricular work such as pedagogical weeks and project work are described in Chapter 4.

---

[2] An average 100 junior teachers are trained in Cologne in every two-year program, in the whole *Land* NRW there are currently about 500 junior teachers in the various two-year programs of all the VETTIs.

Junior teachers have many questions about what to expect in the main teaching seminar. The “key qualifications” for teacher junior teachers in our terminology are known as “essentials”. These essentials are covered in general courses on vocational pedagogy and didactics, mostly within the main teaching seminar, and are illustrated in Chapter 5.

Group work and teamwork are the key instruments of in-service teacher training in Cologne. It is intended to provide a framework of group learning, which is offered in a number of different group settings such as field-related groups (*Fachseminare*), groups for general vocational pedagogy and didactics (*Hauptseminare*), advisory groups, peer groups and project groups. Chapter 6 illustrates who these groups are for, how they are organized and how the work is methodologically carried out such as in “cooperative teaching experience counseling” and “future labs” (Boxes 2 and 3).

Supervised trial-run teaching situations (*Unterrichtsbesuche*) are a central part of the two-year program. These are teaching experiments by the junior teachers where they invite teacher trainers, fellow junior teachers and colleagues from their vocational school to sit in and show the participants where they are at in their teacher development. These situations are key milestones in the teacher training program and 12 of these case-study teaching situations must be completed prior to the exam. What they are, how they can be implemented and what they are good for, can be seen in Chapter 7.

The field-related groups (*Fachseminare*) respond to the academic fields of university studies of the junior teachers. In Chapter 8 the field-related group of economics and business administration (*Wirtschaftswissenschaften*) is presented. Questions that an interested teacher trainer or policy maker might ask are contrasted with answers that I found in shaping my own approach. Annex 3 illustrates the work in this field-related group.

Furthermore, some monitoring and evaluation mechanisms that are routinely used in Cologne during and after each two-year training program are described in Chapter 9. These are carried out together with the teacher trainers and the participating school staff. The junior teachers through the junior teachers’ eyes also prepare written evaluations. Therefore in Annex 6 one reflection by a former junior teacher can be found who finished her training in February 2000 and has been working as a teacher in a vocational college for more than 2 years now since completing the teacher training program.

1. The Challenge of Vocational Teacher Training in a Changing World of Work - Problem Analysis

Enormous changes in the world of work have taken place in the last 10-15 years and they have influenced our way of looking at vocational education and training, and training trainers. National and international labor markets have more and more called for "key qualifications" such as the ability to think in functional matters, to plan precisely, to anticipate difficulties and to implement solutions that truly respond to problems.

Employers all over the world have realized that these "key qualifications", as well as social abilities and communication and organizational skills are more important - and more valuable also in terms of higher productivity levels - to them than just pure basic skills in technical and commercial jobs.

But it is not only the employers that have changed their way of looking at vocational education; it is also our students in vocational colleges who have different expectations when they come to our schools. It used to be that one apprenticeship or training program would be enough for a whole lifetime. A little training and retraining could always be done on the job. This has changed dramatically.

Today, new technical as well as commercial and IT-contents come up almost every year, and the need for recurrent training -if not for second or third job careers - is omnipresent. The solution for many vocational students is to learn how to organize themselves and to organize their own vocational learning and look for teams and patterns of self-organization.

To my own surprise as a trainer with some 20 years of experience, today's students sometimes come with up with far better solutions than we anticipate. That is not because previous generations of vocational students were not as smart as this one, but because current students in vocational education have discovered the enormous potential of teamwork and individual self-organization, and we as trainers are beginning to think more along those lines, too.

These new insights by employers, students, trainers and also curriculum developers have - for example in Germany - led to a vast restructuring process in apprenticeship programs and of German vocational education in general. In vocational education in Germany a “revolution in vocational education” has taken place in the last 10 years and I would like to take the English translation **“Reflection Learning”** first used by SIEMENS – Germany for this phenomenon, which in German is called "*Handlungsorientiertes Lernen*".

“Reflection Learning” stands for learning processes that identify problem situations that are relevant for learners, stress comprehensive and joint planning in groups and come up with strategies that take physical action and finally evaluate the results. This "Reflection Learning " cycle has a number of new challenges especially for us as trainers, namely:

- Curricula need to be revised in light of these new requirements;
- Roles of students and even more so roles of vocational teachers need to be re-assessed and re-defined;
- New methodologies of learning have to be practiced; and most importantly
- New teacher training programs in vocational education have to be developed that respond to the above challenges in vocational education, by:

    - ➢ Focusing on the relevance of in-service teacher training programs in vocational education for students, employers and teachers themselves;
    - ➢ Forgetting the spoon-feeding of our own teachers and instead helping junior teachers to take their own process of learning-and-becoming-teachers into their own hands;
    - ➢ Combining theoretical and practical aspects of teaching in learning situations that have real-life importance and are fun;
    - ➢ Making use of team work in teacher training and turning it into a powerful tool for teachers in their vocational schools;
    - ➢ Developing new “ways of learning” and setting up new "cultures" in grading and testing, since new testing systems should be consistent with new training systems and compatible with training.

All of the above-mentioned key problems in teacher training in vocational education will be addressed in this paper, and it will be shown how they have been tackled in the vocational education teacher training institute in Cologne, Germany in a very creative and innovative way.

2. The Two-Stage Program in the State of North-Rhine Westphalia (NRW) – From University to In-Service Teacher Training

There are two stages in vocational teacher education teacher training in Germany:

- o University studies of 4-6 years in major and minor subjects as well as pedagogy, culminating in the First State Board Exam (*1. Staatsprüfung*); and

- o An in-service teacher training program at a vocational education teacher training institute, combining working as a teacher in a school, with a weekly seminar in the major and minor subjects and supervision by teacher trainers in periodic classes. This culminates in the Second State Board Exam (*2. Staatsprüfung)* and final qualification as a vocational education teacher.

2.1. University Studies for Vocational Teaching in North-Rhine-Westphalia

University studies include:

- A major subject
- A minor subject
- Studies in pedagogy

A minimum of two subjects - a major and a minor, for example in economics (80 hours) and English (60 hours) - are taken at universities, lasting about 4-6 years, depending on the student's motivation and discipline. These courses in the major and the minor subject are accompanied by courses in pedagogy (approx. 40 hours). All three (major, minor and pedagogical courses) are tested in the First State Board Exam at the end of the university studies.

Most of the university studies are highly theoretical - consisting of lectures and written tests. Occasionally subjects are combined with didactics and pedagogy, for example the University of Cologne teaches how to develop, implement and evaluate case studies in economics for apprentices in wholesaling.

Some pedagogy courses have started to practice so-called "micro-teaching", where students teach in front of fellow -students and practice teaching as if they were in real vocational schools. These sessions are then videotaped and discussed. Most junior teachers, however, first experience "real life" teaching situations only when they become a teacher in vocational education.

The basic thrust of university studies is still to prepare the students in content knowledge of their academic field. The university studies are carried out in a highly scientific and academic setting at the end of which students receive degrees in the three subjects (major, minor, pedagogy). The degree that they receive is the so-called "First State Board Exam" (*1. Staatsprüfung*). The degree can be compared to a Masters Program, with a First State Board Program having fewer credit hours in the major subject, and more credit hours in pedagogy. The emphasis on pedagogy differs in the various universities in NRW in Cologne, Aachen, Paderborn, Dortmund or Bochum.

As entrance qualification to university studies, students must prove that they have completed *either*:

- A relevant apprenticeship of 2 ½ - 3 ½ years (for studies in economics it is obligatory to have, for example, an apprenticeship in a bank or in an insurance company); *or*
- An internship of one year (for example, for university studies in business administration, an internship in marketing or accounting).

If this requirement has not been completed prior to the beginning of university studies, it must be completed before taking the Bachelor Degree (*Zwischenprüfung*) after the first two years of university studies.

At the end of university studies, four written exams (4-5 hours) are taken in the major, minor and pedagogy, as well as oral exams (45-60 minutes) in each. These result in a grade-point average that certifies the first phase of teacher training at universities.

2.2 The Vocational Education Teacher Training Institute (VETTI) in Cologne

On successful completion of the First State Board Exams, university students become junior teachers by signing a contract with the government of North-Rhine Westphalia (NRW) in which they agree to participate in the two-year teacher training program for the Second State Board Exam. This second phase of teacher training is still considered to be a training program. However, the teacher trainees receive a salary for the next 24 months, which is about 1/3 of the salary received by a full-fledged vocational teacher who has completed the training program and is teaching a weekly workload of 24 hours.

With this contract, the junior teachers join one of the vocational education teacher training institutes (VETTIs) in Cologne, Aachen, Wuppertal or elsewhere in NRW. This paper focuses specifically on the VETTI in Cologne, but practices are similar throughout NRW.

Junior teachers' ages can vary from as young as 26 years old to people in their early 30s, and some have even been in their 40s. This is because in Germany, people do not graduate from the gymnasium (university-track high school) until the age of 19 or 20, after which they must complete a 2-4 year apprenticeship or internship, followed by 4-6 years of university studies. And some have other experiences in their vita, which explains the age spread.

Recently, one-year teacher training programs in vocational education have been introduced in NRW[3]. This article however will only focus on the two-year program, because it is considered the more solid teacher training program.
The two-year program in vocational teacher training in Cologne is oriented around the formula:

[3] These programs are in subject areas where teacher shortages exist and require master degree holders to have a minimum of 5 years work experience in a profession (for example economics, computer science, engineering) prior to entering the one-year programs. Adaptations to the two-year programs needed to be made to be able to train these trainees. The main difference to the two-year program is that the emphasis in the one-year program is on going more quickly into the vocational schools and teaching more hours sooner.

Professional Capabilities =
Self-Organization + **Combining Practical and Theoretical Aspects of Teaching** + **Teamwork**

What does this mean?

The basic thrust of the Cologne teacher training institute is pinpointed in these three pillars:

Professional Capabilities =

Self-Organization and Responsibility for	Combining Theoretical and Practical Aspects	Teamwork
• "own" training • "balanced" training • cooperation and teamwork • for meeting formal qualifications and requirements • meeting one's own interests and strengthening one's own capabilities	• critical and constructive use of selected theories and models • continuous dialogue with everyone involved in the program • self-reflection • using reflection techniques and mechanisms • "Reflection Learning" research	• team orientation in schools and institutes • critical and constructive participation in all groups offered in the training institute • participation in all counseling groups offered as well as participation in the mentor system in schools

The bases for the professional capabilities are the solid skills that junior teachers bring with them when they first come to the vocational education teacher training institute, as described above in section 2.1.

- an apprenticeship (2 ½ -3 ½ years) in their field of specialization (for example as a bank clerk); and/or

- an internship (1 year) in their field of specialization (for example in marketing); and
- University studies (4-6 years) in a minimum of two subjects (for example in economics and English).

What is enhanced in the two-year teacher training program are the professional skills needed as a teacher in a vocational school. These are capabilities in:

- **Vocational didactics,**
- **Selecting, reducing and preparing contents,**
- **Selecting and mastering appropriate work forms and media,**
- **Improving professional communication,**
- **Accompanying individual and social processes of students and classes in vocational school, and**
- **Beginning counseling in vocational schools.**

These professional competencies are considered to be of utmost importance in the Cologne institute. To this end self-organization, combining theoretical and practical aspects of teaching and teamwork are the three pillars of teacher training in the institute.

Self-organization

A junior teacher once said, towards the end of the two-year training program:

“In the Cologne vocational education teacher training institute, **I have trained myself very well**!”

This expression makes it very clear that teacher training in Cologne is trainee-driven learning! Self-organization allows each junior teacher to select his/her own courses (within a certain framework) in the institute, and also to choose which senior teachers and specific classes to work with in their vocational schools.
In Chapter 5: "Essentials of Teacher Training in Cologne" this self-organization pillar is described in more detail.

Combining Theoretical and Practical Aspects of Teaching

Junior teachers come to the teacher training institute from a university, with knowledge about respective subjects such as economics and English. Not all of this knowledge will be part of the vocational education curriculum; the trainee must construct courses by selecting the most appropriate content, by reducing difficulties, and by adding pedagogical help in learning.

Junior teachers must have a reflective, experimenting, challenging, interested attitude, and usually want to make it fun for students to learn. They must be able to translate theory into practical learning situations that have relevance for the students and that are interesting and fun!

In Chapter 4: "Organizing in-Service Teacher Training - A Joint Effort", more information can be found about this pillar of combining theoretical and practical elements.

Teamwork

Some of us probably still know the teachers from our own vocational school experience: teachers who not only prepared everything by themselves and were in charge of everything, but also thought that they could do better alone than in a team! This approach is the opposite of the one at the VETTI in Cologne.

The Cologne motto on teamwork is:

“Every junior teacher has the right to be supported by the group as much as the group has the right to be supported by each junior teacher.”

Teamwork in the Cologne teacher training institute is given a very high importance. Groups are used in numerous forms, in all phases of the teacher training. Since this pillar of teacher training is considered so important, a separate chapter is written about it, Chapter 6: Working in Teams.

3. Legal Framework and Principles of the Program

This chapter first explains the legal framework for vocational education teacher training (*Seminarrahmenkonzept und OVP)* and its implications, such as

- Number of case study teaching situations;
- Primary responsibility for the schools for teacher training;
- Importance of self-organization and teamwork; and
- State board examinations.

Secondly, the central didactic principles of the in-service teacher training program in Cologne are given. These are assumptions about the learning process of new teachers in vocational education.

3.1 The Legal Framework of Teacher Training in NRW, Germany - Teacher Training Regulations and State Board Exams

The teacher training program in Cologne (as well as all other programs in that State (*Land)*) is governed by a legally binding framework (*OVP =Ordnung des Vorbereitungsdienstes und der Zweiten Staatsprüfung für Lehrämter an Schulen*) and a more specific legal instruction for teacher training (*SRK =Seminarrahmenkonzept*) developed by the Ministry of Education of the State Government of NRW (*Ministerium für Schule und Weiterbildung der Landesregierung von Nordrhein-Westfalen*).

The *OVP*, which is both a law and a kind of master plan for teacher training, regulates the following aspects of the 2-year training program:

- First, there is a call for junior teachers to take on a high level of self-organization and responsibility for their own training. The training itself has certain elements offered in a structured way within the teacher training institute. However, in Cologne the trainees have the right to pick those elements or essentials (see Chapter 5) that fit their own training needs best.

- Secondly, junior teachers must start teaching independently (i.e. without supervision) 6 months after their training begins, and thus participate actively in daily school life.

- Thirdly, vocational schools and their staff are given a high degree of independence and responsibility in training new teachers in everyday school life and also in setting special programs monitored by teacher training mentors (*Ausildungskoordinatoren*) in each school.

- A minimum of 6 trial-run teaching situations (see Chapter 7) in each of the two subject qualifications of a teacher (e.g. economics and trade, home economics and English) must be completed during the 2-year-programme. This makes a total of 12 experiments in which trainees invite senior teachers and teacher trainers to sit in and advise on the lesson itself as well as on written lesson plans for those case studies. These lesson plans had been prepared by the trainees beforehand and document the methods chosen, the didactical path as well as the objectives for this very lesson.

- Furthermore, a "Planning and Development Talk" (Planungs- *und Enwtwicklungsgespraech*) is required halfway through the training program. A colloquium with teacher trainers from the VETTIs as well as mentors from the schools is held, not as an exam, but to look back as well as forward and to serve as a counseling mechanism for the junior teachers.

Finally, at the end of the two-year-program the junior teachers must undergo the Second State Board Exam:

"The State Board Exam verifies if and to what extent the teachers have participated in the two-year vocational teacher program and gives an accreditation to the candidates in form of a grade." (§ 52 OVP, Accreditation System for Teacher Training).

Senior teacher trainers from teacher training institutes and mentors from the vocational schools grade the Second State Board Exam. The Exam is composed of three parts: A written thesis, two case study teaching situations and a colloquium.

First, a written thesis must be submitted. The thesis must be written in one of the two subject qualifications of the junior teacher and must be related to their own teaching experience in their vocational school. For example, a teacher with a university degree in economics might choose to write a thesis on **"Planning, Carrying out and Evaluating a Teaching Sequence With Apprentices in Industrial Management on How to Set up a Marketing Project for the new Ford Fiesta in NRW"**. Theses are written towards the end of the two-year – program, simultaneously with junior teachers' regular teaching, seminar work and so on. The thesis typically documents a sequence of 3-8 hours that the trainee has actually taught, with the planning, teaching, grading and evaluation aspects each documented. Theses usually range from 30-50 pages in length and are graded by teacher trainers from the Cologne institute as well as teacher trainers from other institutes.

Secondly, two case study teaching situations in the two different subjects of each trainee must be presented as an exam, in which senior teachers as well as trainers from the teacher training institute sit in and assess the accomplishments. For example, in an economics class for bank clerks *(Bankkaufleute),* **"The importance of economic growth for an active income distribution policy in Germany"** might be a trial-run teaching situation while in a business administration class of a Commercial College for full-time students going for the final degree in secondary education (*Handelsschüler*), a teaching situation on **"We develop employment criteria and plan a job interview for an apprenticeship post in a supermarket"** might be presented.

Finally, the exam includes a colloquium with the teacher trainers and coordinators from the respective schools on teaching and training aspects. A typical colloquium in Cologne presents students with a hypothetical but concrete teaching exercise targeted at a specific learning group.

Hypothetical Questions in a Second State Board Exam Colloquium

"A new three-year vocational school career track (*Bildungsgang*) in wholesaling has just been established at your new school. How would you plan, carry out and evaluate an excursion with first-year students to the regional market leader in paper products, using reflection learning methods with your students?"

or

"How will you plan your new subject, general business administration (*Allgemeine Wirtschaftslehre*), for apprenticeship classes of IT –clerks, keeping in mind that you want to include as many projects as possible with other colleagues and other subjects such as mathematics, computer programming and systems operation!"[4]

The State Board Exam is graded by teacher trainers from the VETTIs, teacher training mentors from the vocational schools and representatives from the Ministry of Education. The results of the different parts of the state board exam are weighed differently and compiled into a grade point average that indicates the quality of the junior teacher, who is now a qualified teacher. He or she can then apply for a job with the Ministry of Education in NRW in a vocational college of his or her own or the Ministry's choice. In the last few years some changes have been made inasmuch the vocational schools also have the right to employ trained teachers in vocational education directly. This is an additional incentive for schools to do their best during the two-year training, since they can then retain good people that have got to know the school very well[5].

3.2. The Didactical Principles of the Teacher Training Program in Cologne

The didactical principles of the teacher training program in Cologne are based on assumptions about learning processes in adults and have a profound influence on the institute setting for teacher training.

---

[4] This kind of planning is called Annual Didactical Planning in vocational education in Germany.

[5] The framework for all the teacher training institutes in NRW is provided by the *SRK*. Compared to the *OVP*, the *SRK* is a more specific legal instruction for teacher trainers and it lays out teaching standards for future trainers, describes functions of a good teacher in vocational education, stresses the importance of reflection learning, describes possible methods in vocational schools and emphasizes the importance of a training program, where the different actors in teacher training (vocational education teacher training institutes, schools, mentors and industry) work together as much as possible.

Assumptions About the Learning Process of Young Teachers in Vocational Education

The Cologne vocational education teacher training institute "philosophy" is based on a number of assumptions about learning of junior teachers. These are

- Adult trainees come to the institute because they have an interest in learning; they want to improve and are highly motivated (naturally they also come to the institute to obtain the degree!);
- The institute confronts trainees with reflection patterns that might be new to them. Their prior experiences and their biographies may have "biased" them in their way of looking at learning processes;
- We assume that learning to become a teacher is a unique experience for everyone and requires permanent exercise and reflection (principle of utmost individualization of learning);
- Very often young trainees ask for models and ready-made solutions. However, the teacher trainers in the Cologne institute also propose learning in uncertainty and advocate trying ways that fit each individual best;
- Teacher training is not like pressing skills through a funnel, assuming that ready-made teachers come out! On the contrary, it is an ongoing process that can be initiated, challenged, supported, provoked, accompanied - in other words, supported, all along;
- Principle of reflection learning: learning should be related to real-life and problem situations;
- Principle of reversibility in learning and teaching: teachers are learners but learners can be teachers at times; both can mutually benefit from one other;
- Principle of self-organization and individual responsibility in teacher training: Trainees take responsibility for their own development of

    - ✓ Curricular-didactical competencies,
    - ✓ Methodological-communicative competencies and
    - ✓ Pedagogical-social competencies;

- Learning how to become a teacher works through networks and team work plays a very important role in this;
- Principle of vocational and life background: Learning in vocational schools should always be related to the work and life experience of our students and should always keep that in mind;
- Principal of life-long learning: The in-service teacher training institute is only the first phase in teacher training, to be immediately followed with further teacher training (which in NRW is given on the job and is organized by a separate training body)!

4. Organizing In-service Vocational Education Teacher Training in an Institute - A Collaborative Effort Among School Staff, VETTIs and Junior Teachers

The organization of the two-year training program is a major logistical challenge, requiring a lot of coordination and understanding throughout the two years among the various partners:

- Junior teachers;
- Vocational school staff; and
- Vocational education teacher training institutes

It is the VETTI that organizes the work and sets the organizational framework.

The phrase “Dual System” describes the system of Germany apprenticeship training which takes place both in vocational schools as well as in companies. In a way this expression does not only refer to the German apprenticeship system, but also to its teacher training.

This is because training teachers in vocational schools **and** vocational education teacher training institutes is influenced by the aspect that institutes and schools both look at themselves as training grounds for junior teachers and are prepared to open up learning arrangements for the junior teachers.

This chapter describes where the different parts of training (*Ausbildung im Studienseminar = Hauptseminar und Fachseminar, Praxis in der Schule, Begleitprogramm, kooperative Ausbildung in Seminar und/oder Schule und Peergroup*) take place in Cologne, and how many hours are allotted to each part of the training. Later, Chapter 7 goes into more detail using the example of training in economics and business administration (*Fachseminar Wirtschaftswissenschaften*) to illustrate the various aspects of organization.

Training takes place in vocational schools as well as in the teacher training institute. The training is divided into:

- Teaching in schools as well as other activities there (such as conferences, open houses, excursions, teacher-parent-days, etc.)
- Accompanying Program;
- Cooperative training sessions between institute and schools;
- Peer group work; and
- Training in the teacher training institute.

The following table shows the various training and venues, hours spent and frequency over the 24-month program, and where they are covered in this paper.

Table 1: Organization of Teacher Training

Training Type and Venues	**Total Hours**	**Frequency**	**Where in this paper**
Teaching and other Practical Elements in Vocational Schools	825 teaching lessons	12 hours per week (6 in each subject)	Chapter 7 - Case Study Teaching
Accompanying Program	70 hours	2 hours bi-weekly	Chapter 6 - Advisory Groups
Cooperative Program between Institute and Schools	100 hours	Once or twice during the two year program, intensively over a period of 6-8 weeks, once a week a whole day in the schools	For examples, see Boxes 3 and 4
Peer group work	20 hours	For example 5 times 4 hours	Chapter 6 - Working in Groups
Training in the institute (In Cologne there is one fixed seminar day and on this day the trainees get all the three seminars listed in the right column)	440 training hours	Field-related group 1, e.g. Economics: 120 hours (2 hours/week) Field-related group 2, e.g. English: 120 hours (2 hours/week) General Vocational Pedagogy and Didactics: 200 hours (3-4 hours/week)	Chapter 5 - Essentials Chapter 7 – Trial-run Teaching See also Boxes 1 and 2

The whole training period covers 1455 hours in the entire two years or roughly 25 – 30 hours a week, depending on the schedule of the various group activities. This does not include, however, preparation time, self-study periods, participation in extra-curricular activities and homework assignments.

A typical weekly schedule for a trainee in school and institute might look like this:

Table 2: Typical Weekly Schedule of Junior Teachers

Monday	Tuesday	Wednesday	Thursday	Friday
8-12 General Pedagogy and Didactics In Vocational Education Teacher Training Institute (Essential 1: Biographical Work)	8-10 Teaching English in a Full-time Commercial College Class (Case-study teaching situation, supervised teaching) 10-12 Observing teachers in their classes in labor economics	8-10 Teaching in Business Administration in Wholesalers Classes: Aspects of Contract of Sale (unsupervised teaching) 10-12 Observing Teachers in Teaching Business Correspondence	8-10 Observing Teaching Grammar in English Apprenticeship Classes of future Bank Clerks 10-12 Teaching Income Distribution Policies in Apprenticeship Classes of future Industrial Managers (*Industriekaufleute*), unsupervised teaching	8-3 Cooperation between Institute and School: Participation in Future Lab Experiment (see Box 3) in a Vocational School with Junior Teachers, Teacher Trainers, Senior Teachers and Classes
1-2.30 Field-related Group1: Business Administration (Planning a Management Game)			1-3 Peer Group Work	
3-4.30 Field-related Group2: English (Teaching English Literature)		3-4.30 (Bi-weekly) Accompanying Program in Vocational School		

In addition, there are so-called pedagogical weeks, once or twice during the training programs. These are held outside the institute venue and are prepared, carried out and evaluated by the trainees. The topics in these pedagogical weeks are related to subjects of general interest for vocational schools. Past pedagogical weeks for example have dealt with how to use gestalt therapy in vocational education or how to prepare a week of project work in a vocational school.

Furthermore, teacher trainers in the institute offer special voluntary courses, related to the "essentials" described in the previous chapter.

One of these extra courses offered in the institute in Cologne is POLIS.

Box 1: POLIS (*Politik und Internationale Sicherheit*) - A Strategy Game for Teaching International Economic Policy and International Security

POLIS is a multi-functional game that reflects the world situation politically, economically and militarily. The structure of the game is marked by the world being divided into 11 regions (Africa, Asia, Western Europe, Eastern Europe, North America, South America, China, Russia, the Arabic Countries, Japan, Oceania). Each region has a certain starting position, which is based on its present resources and its economic and military situation. Economically four goods are being produced or are found in this region: industrial products; agrarian products; energy and natural resources such as gas, oil and coal; and the potential for renewable energies.

The aim of the game is to develop global and regional strategies that *either* allow one's own region to prosper without any other region suffering overly; *or* - even better - to lead the entire world into a more peaceful situation. Each region is played by a minimum of 2 players, and up to 4 players can easily play per region to fill all the roles (a politician, an economist, a military player and an opposition player trying to topple his own government). The tasks for each player are handed out before the game; present international contracts are made available to the players; a huge world map illustrates the regional economic and military situation.

Roles can change during the play when players start identifying too much with their own role, though. In addition, there are players to play the World Bank, the international press and the international moderators. Two moderators are sufficient for playing the game.

The game is a true simulation of the world situation and it is based on an econometric estimate of the world situation. For such a complex game enough time should be allowed to play through a scenario: A minimum of 2 days is required, 3 days are better. The game is divided into phases of 2-3 hours in which specific political, economic and military decisions can be made. The consequences are discussed at the end of each round in an international round where each politician has to give a speech in front of the United Nations Security Council and defend his/her specific approach. International Committees and Conferences can be called in to discuss crises in world politics and world economics. Military conflicts can be set up and then have to be dealt with in the game.

The game gives junior teachers a good overview of how to bring a big crowd of learners together and practice self-oriented teamwork. Various subjects are covered such as economics, international policy, German (giving speeches and negotiating) and English and French (e.g. World Bank can be played in English, Africa for example partly in French) in a truly interdisciplinary way.

Junior teachers in Cologne liked this game so much that they started using it themselves in their respective vocational schools.

5. Teaching the "Essentials" in the Main Seminar in Cologne – what Junior Teachers Should Expect

"Essentials" in Cologne are considered the key areas to be covered in teacher training and this is why they are covered in the general courses on pedagogy and didactics (*Hauptseminare*). In blocks of approximately 20 hours they are offered to the trainees in different periods of the two-year program. The trainees document these "essentials" in their Teacher Training Reference Book (see Annex 1).

Of course, all the essentials are being fed with the latest literature as well as with texts and sheets from the relevant ministries for vocational teacher training in Cologne in the State of NRW in Germany.

These major in-service training elements within the teacher training center are mostly completed in the institute itself. They deal in different phases of the two-year training program with the following (trainees') questions and statements:

5.1. Why Do I Want to Become a Teacher in Vocational Education?

In this essential it is most important that the trainees realize that their own history had an impact on their becoming a teacher now. Trainees must come to terms with the fact that their personal experience has shaped their "teacher profile" and they must - with regard to their future development – be open to improve their teacher personality in the two-year training program.

A course "biographical self-reflection" pursues the understanding of his or her own biography and tries to make it transparent to each trainee. [6] Methods used in this course are based on psychological counseling and cover for example things like painting, acting, and doing fantasy journeys, just to name a few of the approaches.

[6] By the way, some trainees have also used this course to reflect about other settings in their lives outside the teaching occupation.

A first important part of this essential is done in the first week, before the trainees even see their vocational schools for the first time. After this one-week basic training course at the very beginning of the program, a two-day further training workshop at the end of the two-year program is carried out together with the schools. This further training has the objective of contrasting the intentions of the junior teacher in the first week, with his/her achievements and developments within the whole program.

5.2. How Do I Define My Own Didactic Concept?

Of late, vocational schools in Germany have been asked to take over more responsibility, act more independently and work in a more self-conscious and team approach. These principles also apply when it comes to developing one’s own guidelines for didactic work. The VETTI in Cologne teaches that teachers must develop their own didactical strategies. Naturally they have to relate to professional profiles, curricula and board exam requirements. However, the objective is for teachers to experiment with different didactical approaches and in the end to find their own way. This "way" is then in turn more than a mere strategy for planning lessons.

Training work in didactics puts trainees into the situation of students and encourages them to develop lessons that are age and school career appropriate. For example, the "Economic Principle" as a subject must be presented differently in an apprenticeship class for future bankers than in a class for full-time commercial college students (*Handels- oder Höhere Handelsschüler*).

Moreover, in the institute it is believed that curricular content must be translated into lesson topics that will strongly interest and stimulate these particular students: For example, which lesson topic is more likely to motivate learning: “The Equilibrium Price in Quantitative Theory”? Or “The Price Does it – We are Setting a Sale Price for our own Students’ Newspaper” - after the students have been through planning, designing, advertising for and preparing the lay-out of their own newspaper in previous lessons in economics and business administration!

Questions that junior teachers have, such as:

- How do students learn and what needs to be done to support this?
- What is the teacher’s (hidden) agenda in defining content, for example in economic policies such as the ecological tax reform in Germany?
- What is the general vocational and educational mandate of my school?
- Where may the students have been exposed to specific contents before this lesson (e.g. teaching marketing implies thinking before the lesson where the students have been exposed to it already)?
- What is the relevance of this specific topic for my students in their future? For example, when I teach the contract of sale, how does this relate to my students in apprenticeship classes or full-time students who have never had work experience?

- How can I make content very concrete and tangible? What should the examples look like and how do I structure the lesson so that my students are motivated?

  are all dealt with in a variety of didactic sessions.

The development of the didactical concept of each junior teacher is an essential that has a very high importance and it is greatly emphasized and that is why it takes part in the first quarter (i.e. the first six months) of the teacher training program. In a way, all the other later essentials have a supporting function for this one.

5.3. Selecting Methods That Fit Me!

The objective of this essential is to build up methodological competencies in junior teachers by presenting different kinds of methods that can be used in teaching. In Cologne this is done by teacher trainers using methods in their own groups for vocational pedagogy and in field-related courses, or by demonstrating methods in teaching in schools, and also in conferences, workshops and exam situations.

What is very important in the VETTI philosophy is that the trainer – unlike in some cultures where the role of the trainer is seen with an authoritarian touch - is seen as a moderator in learning processes for self-organized team work and his job as a coach is to make sure that permanent communication takes place among the participants. To this end it is so important that junior teachers learn how to get these competencies.

The junior teachers will perceive the content of this field of learning “methods” as an experienced work form, in other words they will see methods in their training program as carried out by their teacher trainers, their mentors in the schools and others. This is considered particularly important, because methods are believed to be used better after having seen them in operation first before attempting to use them in one’s own setting.

In the first step, trainees learn what is considered the basic repertoire in teaching in vocational education for example

- Phasing a lesson;
- Using group and partner work in a class comfortably;
- Motivating different groups of learners;
- Preparing different kinds of learning arrangements;
- Steering class activity;
- Offering patterns of learning; and
- Reflecting and debating together with vocational students.

As time goes on, junior teachers are confronted with increasingly sophisticated methods such as complex case studies, projects, moderation cycles, future labs and scenario techniques. To demonstrate the more advanced methods, close cooperation with the schools is sought by the institute.

5.4. Professional Communication – How Do I Implement This in Class?

Studies show that it is still the case in vocational schools in Germany that 60-80% of all the words said come from the teachers rather than from the students. It is no wonder then that some students graduate with communication deficiencies. [7]

Therefore it is regarded as very important that junior teachers reassess their communication competencies and come to a professionalization of their communication skills in the light of the above. Reflection and diagnosis competencies of teachers are supported in this essential.

The content in this area is therefore to

- Learn to be able to take a role in discussions;
- Structure the tasks;
- Listen actively and carefully;
- Provide and receive feedback; and
- Summarize results in groups.

When referring to professional communication, it is always better done than talked about. This is why in the institute, communication exercises are offered in a variety of situations. A very handy and vivid tool in improving professional communication is certainly the video recorder to provide feedback after videotaped sessions. This tool is used a lot in VETTIs.

5.5. Working and Learning in and with Groups

Junior teachers teach in ever changing groups, they work in different conference and project groups and they have to adapt to new groups all the time. The objective in this essential is for trainees to become more and more aware of group processes and increasingly capable of actively steering, promoting and evaluating group processes.

Five different group settings are offered in the VETTI in Cologne:

- Field-related groups for each of the two academic fields of the junior teachers;
- Groups for general pedagogy and didactics for dealing with the essentials of teacher training in vocational education;
- Advisory groups for work with the vocational school staff;
- Peer groups of junior teachers for exchange of information and experience; and
- Project groups for specific cooperation among junior teachers, school staff and VETTI.

---

[7] Of course, communication skills are also dependent on class and educational level of parents.

The group work focus as it will be shown below in Chapter 6 is one of the key elements in the Cologne teacher training approach. Junior teachers are supposed to feel comfortable in their own learning groups as well. A lot of work is done with group dynamic approaches.

In a basic training phase, those trainees who have not had experience in youth or social groups are put together so that they can become better acquainted with the typical phases of group processes. In a further training phase, trainees can select from the following:

- Group lessons: initiating, accompanying, wrapping up and evaluating group work phases of students
- Group intervention methods
- Observing, steering and reflecting social processes and
- Improving social behavior and team competencies of students

5.6. Media – More Than Just Learning Devices

In the VETTI in Cologne it is the goal to use media when they are justified for learning with the junior teachers and their usage in schools should be derived from their usefulness and necessity for learning with vocational students. We consider media useful and necessary, when the following criteria are met:

- Media are tools in a process of getting students to learn better;
- Media are no means in itself;
- Media can be used to shape the problem analysis in a lesson;
- Media can be used to better visualize solutions and show transfer of competencies gained in the lessons; but also
- Good media usage alone never makes good teachers!

In principle, media should be selected or prepared by the trainees themselves (if possible). The content of this essential is *how* and *when?* to use media such as blackboards, overhead projectors, information sheets, school books, flip charts and others. Using media is considered to be part of the job and every trainee should be comfortable using these.

In a further step in this essential, some field-related groups usually produce their own media, such as videos and CDs. However, media production is seen as a side product of this essential and it is only done, if enough time for this can be provided within the VETTI.

Junior teachers should be able to handle media comfortably and this is also why the institute puts emphasis on dealing with more sophisticated media in vocational schools. This is the reason why the “European Internet Driver’s License” is expected from students at the end of their training, as is the ability and the willingness to experiment with other media. Video can be used in school, it can also be used to tape case study teaching situations and discuss them afterwards vis-à-vis the following video usage criteria for trial-run teaching situations, such as:

- Organizing recognizable phases in teaching;
- Setting up learning arrangements for the students;
- Communicating with students;
- Using different strategies to make students participate;
- Promoting competencies in teaching situation;
- Dealing with disruptions in class;
- Relating with the students (such as appreciation and understanding).

Last but not least, Cologne has the reputation of being the City of Media in Germany because so many media, television and radio companies are based there. In teacher training and also in every day vocational education, this often provides opportunities to work with the apprenticeship program of "Media Clerks" in Cologne on a very high technical level.

5.7. Making Assessments and Judgments as a Teacher

Every one of us has had the experience in school of how painful it can be when we felt that our teacher did not grade us correctly! Now the junior teachers change sides and for the first time they have to grade, too.

In this essential the junior teachers learn how to put together written tests and check achievements in

- Learning;
- Methodical; and
- Social competencies.

In this essential structured help is given to the junior students as to how to

- Set up tests covering the same topics for different age groups;
- Cover all the competencies laid out in the previous lessons;
- Deal with the aspect of turning competency achievements into "gradable" tasks;
- Return tests with a maximum of "learning" to all the students in the class.

However, it is not only the grading that they learn: at least as important seems to be learning how to support and promote those students who have not done so well. Special emphasis is given ways to deal with underperformers in vocational classes and how to get them back into the "main stream" of learning.

In other words, trainees learn how to put together written tests, grade them and return them to their class following certain guidelines. They learn – with the help of teacher trainers and senior teachers in schools - how to develop alternative grading procedures, for example when it comes to making assessments about group or project work[8]. And they develop criteria on how to assess and judge reflection learning of their students, using qualitative criteria in measuring different competencies.

They learn about typical misjudgments of vocational teachers, and they learn how to prepare written reports about students and how to defend them in grading conferences in their schools.

5.8. From Advice to Counseling – An Important Difference!

We all have given advice in our lives here and there and some of us are even paid for that as consultants! However, counseling as understood here goes beyond advice. Counseling starts a process that is not only learning to give advice, but also convincing people to accept it. At the end of this process, the trainee should be capable of giving advice to others in such a way that those on the receiving end are capable of integrating it into their repertoire.

The objective of this essential is to build up counseling competencies in the junior teachers that enable them to carry out their counseling tasks in school professionally. One thing is helping students find their way through the jungle of possible school careers in vocational education, and this is among other counseling opportunities in daily school life one that is appreciated very much by the junior teachers.

In this essential, junior teachers learn the basics of systemic counseling, cooperative reflection counseling (*kollegiale Praxisberatung*, see Box 2) gestalt therapy, and elements from the neuro-linguistic programming, NLP, counseling approaches.

In Cologne, once again, the thrust is learning counseling through actually doing counseling, and so many life-counseling situations are offered in the institute. Furthermore, the school as the learning venue for counseling is used a lot e.g. counseling parents, other teachers, firms and of course students.

5.9. Completing the Teacher Functions with Administrating and Organizing

Daily administration and organizing duties shape the routine work of our vocational teachers. The objective of this essential is to prepare them for basic administrational and organizational tasks, such as running a class journal, informing students about vocational school laws, understanding legal aspects of being a teacher and the legal results of misjudgment and misbehavior, telling students about cooperation opportunities with training companies, encouraging junior teachers to participate in school profile development, and the like.

---

[8] For those interested in measuring group or project work, you will find an example of how group work can be graded creatively with the help of the "fish bowl method" in Chapter 8!

In addition, junior teachers are trained in forms of self-organization in school. They receive guidance in organizing class trips and how to work with parents and other partners in vocational school life.

6. Working in Teams – An Important Self-Organized Planning Tool

Group and teamwork is one of the key instruments of the VETTI in Cologne. The reason why this is advocated so much in Cologne is that the teacher trainers there believe that groups provide an excellent framework for junior teachers to:

- Benefit from synergic group effects and the number of opinions expressed in each group;
- Communicate with others about their own theories and models in didactics and methods;
- Search for clarification within familiar groups and support others in this quest;
- Activate energy to turn their group into their “Pedagogic Home” and develop gradually their professionalisation; and
- Find comfort and support in their own peer group and help to provide a special learning climate within the group.

These objectives are tackled in the Cologne teacher institute through a number of organized groups as well as with spontaneously- organized groups, including:

1. **Field-related groups (*Fachseminare*)**
2. **Groups for general vocational pedagogy and didactics (*Hauptseminare*)**
3. **Advisory groups (*Beratungsgruppen*)**
4. **Peer groups**
5. **Project groups**

1. With the beginning of teacher training for vocational schools, trainees start two **field-related groups (*Fachseminare*)**, which are related to those two subjects where they got their university degree in, for example a so-called First State Board Exam in Economics and English. In Cologne a number of vocational subjects are offered alongside with so-called general ones for field-related group work.

Some vocational subjects offered in the VETTI in Cologne are:
Economics and Business Administration (*Wirtschaftswissenschaften*), Banking (*Bankwesen*), Insurances (*Versicherungswesen*), Trade (*Handel*), Taxes (*Steuerlehre*), Home Economics (*Hauswirtschaftslehre*), Food Technology (*Lebensmitteltechnologie*), Automation Technology (*Steuerungstechnik),* Automotive Technology *(Kraftfahrzeugtechnik)*, Production Technology

(Fertigungstechnik), Electronic Engineering *(Elektrotechnik)* and IT-Technology (*Wirtschaftsinformatik*).
In the so-called general subjects German, English, French, Political Science, Sports, Physics and Spanish, among others, are found.

Each of the two subjects is offered once a week for two hours. For heavily frequented subjects (for example economics and business administration in the 1998 training program had almost 70 trainees), several groups are in place. For each group, one teacher trainer is in charge throughout the whole two-year training program. In any case, the size of each of the field-related seminars should not exceed more than 15 participants because of group dynamics and learning economies of scale.

2. When the new teachers join the vocational education teacher training institute at the beginning of their two-year training program, a number of **groups for general pedagogy and didactics (***Hauptseminare***)** are built by the teacher trainers and course work following the “essentials” (see Chapter 5) is developed by them. These courses are usually offered once a week for 3-4 hours and last 6-8 weeks and the trainees can pick those they like with the individual trainers that handle them. These courses cover all the "essentials" considered necessary in the Cologne institute and the trainees get to know different teacher trainers in their respective teaching styles. Furthermore with the learning groups changing every 6-8 weeks, the trainees also get to know many different fellow junior teachers at the beginning of their training.

After about 1/3 (=8 months) of their training period, trainees choose their teacher trainer in charge of general pedagogy and didactics for the rest of the training. This teacher trainer (*Hauptseminarleiter*) then is in charge of accompanying the trainees through the rest of their training and preparing his/her own group for the exam situation. These teacher trainers work very closely with the ones in the field-related groups (*Fachseminare*) and are also invited to visit case-study teaching situations (see Chapter 7) of their trainees. Moreover, these teacher trainers write the final reports (which summarize the trainee’s development in the two-year program and finish with a grade) and are present in the final state board exams. Evidence has shown that the junior teachers are very happy with this reliability and certainty in the last two thirds of their program.

3. **Advisory Groups** (*Beratungsgruppen*) are put in place together with the vocational schools. The objectives of these advisory groups are to give advice to each other in a specific school setting as well as discuss teaching situations in various parts of a vocational school. The VETTI in Cologne has drafted a contract with each vocational school in and around Cologne that participates in vocational teacher training to specify the cooperation between them as to what each vocational school is willing and capable of doing.

Usually the schools agree to setting up advisory groups (or so-called newcomers groups). Junior teachers (depending on the school, varying from as little as 2 to 7 or even in some cases more than that) from one vocational school are put together in these groups. A specially nominated teacher training mentor (*Ausbildungskoordinator*) from each school invites and chairs meetings that can be held bi-weekly or once a month, with 1 hour a week of this kind of group work counting as credit for the teacher training program. All of these activities at the schools are called the Accompanying Program and this program is monitored and evaluated by each school.

A special method is proposed for these advisory groups by the VETTI in Cologne, which is called "Cooperative Reflection Counseling" (*kollegiale Praxisberatung*).

Box 2: "Cooperative Reflection Counseling" (Kollegiale Praxisberatung) – Problem Solving in Teacher Training Using Group Synergies

This counseling approach has been developed in the Cologne institute and is used frequently there. It is practiced with junior teachers and senior vocational teachers as well as with teacher trainers. Cooperative Reflection Counseling is structured in six phases plus an agreement both at the beginning and at the end.

The agreement at the beginning sets the tone for the counseling and identifies seating arrangements, regulates meeting frequency, promises total discretion and agrees on the moderators.

In phase 1, the group identifies a problem within the highest priority. To that end it is important that every participant is clear about what kind of counseling they need for themselves and that the moderator lets the group decide which person's request it wants to deal with.

In the second phase, the person whose problem is taken up explains his/her specific situation and why the problem is so urgent. Certain questions can help identifying the problem in this phase, such as:

- What happened?
- What are my thoughts?
- What is my problem in this?
- Whom does this intimidate other than me?

In phase 3 the person seeking counseling gets feedback from the rest of the group. The participants usually give two kinds of feedback; one is the so-called "outer perception" relating to verbal expressions, language used, pitch of voice, interaction (*Appell, Selbstoffenbarung, Beziehung*), and also relating to non-verbal expressions such as gestures, mimics, body language etc. The other perception level is called "inner perception" and relates to the participants of the group and their reactions, feelings, images, fantasies after listening to the person that is seeking counseling. The protagonist gets the chance to respond to the feedback.

Phase 4 raises other perspectives and multiple meanings that result from the problem layout. The participants come in with sentences like
In your position I would …
I make the hypothesis that …
I have a wild thought …
It is important in this phase that everything goes and nothing is forbidden!

In phase 5 the whole team develops alternatives. Helpful are sentences like "I as the teacher, … student, … teacher trainer, … director, … mother, … chamber of commerce representative would do …". The group is supposed to come up with a lot of alternatives and new patterns. The protagonist should then pick out what suits best and also give a feedback to the group.

In phase 6 the protagonist decides what is good for her/him in that situation and which alternative will be taken over in his/her repertoire. A role-play trying out these new habits at the end of this phase is good for exercising new patterns before going out into school routine again.

The final agreement is always helpful for the protagonist, because a certain degree of commitment is made. A sentence like "I am going to try it out and I will let you know next time!" is good when it is wrapped into questions like:

- Who does this with whom?
- What exactly do I want to do?
- How do I want to do it?
- When and where will I do it?

I have personal memories of the following counseling situations in which cooperative teaching counseling was practiced and interesting new patterns were developed:

- A teacher trainer seeking counseling, because he had a junior teacher in his group who was absolutely resistant to counseling in case study teaching situations;
- A trainee who had the impression that her teacher trainer in economics would never appreciate her work in creative methods, but would rather criticize her for lacking didactic considerations;
- A training coordinator at a vocational school who had difficulties with trainees in her school who would not open up their thoughts before going into case studies and thus were repeating the same mistakes all over again.

4. Experience in Cologne has shown that junior teachers in vocational education benefit a lot when they are grouped together with **peers**, i.e. junior teachers from different vocational schools and not necessarily always with the same technical backgrounds. These people meet regularly in groups of 4-6 and discuss best practices they have seen or done themselves and find patterns of why things work in some settings but not in others.

These groups can pick issues that are relevant for a specific vocational school such as for example how to handle learning resistances of full-time students in Commercial Colleges (*Handelsschulen*). The students in these schools are usually between 16 and 18 years of age and have not completed a secondary school; they also very often do not have the best chances in entering the labor market after graduation.

The peer groups can also select issues that are of a more general nature such as preparing for a teacher's conference or for a parent-teacher day at a school or something for an open house of the vocational school.

The participants can choose the number of meetings. Some formal things, however, such as the obligation to write minutes of each meeting as well as a minimum peer group duration of 20 hours throughout the two-year program are required. Evidence shows that trainees are very comfortable with this group and even tend to spend much more time working like this.

5. **Project groups** round up the group learning approach in Cologne. These project groups are put into place, when specific cooperation is called for, such as supporting and promoting the idea of reflection learning, or using teaching methods in vocational training that require special arrangements.

These project groups are in place for a minimum of 6 weeks and work very closely with the vocational schools. Ideally, cooperation among a group of junior teachers and one or two teacher trainers from the institute, a vocational school class and one or more of their teachers will be developed.

Frequently trainees in the teacher training programs realize that the "honeymoon" in teaching is finished after a few weeks in school and the bonus of being a very new teacher is over very quickly. Disruptions and troublemakers are also part of our daily routines in vocational schools and everyone has to deal with these, including junior teachers. As an example of a project group, a group of junior teachers in the Cologne institute asked some teacher trainers for advice on this and an interesting project group was started, which is documented in Annex 4.

7. Trial-run Teaching Situations – Teaching and Feed-Back

Trial-run Teaching Situation (TRTS) is the English translation for the German *Unterrichtsbesuch*. There are many kinds of case-study teaching and TRTSs can be used to meet different objectives throughout the two-year program and even after that.

Trial-run Teaching Situations (TRTS) of junior teachers can be done:

i. In front of senior teachers from the teacher training center, or
ii. In front of members from the peer group or
iii. In front of colleagues at a vocational school or
iv. In front of members from the advisory groups or within project groups.

The important thing is that they are always “teaching experiments”, where the new teachers have the right to show where they are at in their development and they have the right to make mistakes.

A minimum of 6 TRTSs are required in each of the two teaching subjects of the vocational teachers. This brings it to a total of at least 12 teaching situations in which the trainees invite senior teachers and teacher trainers to first sit in the lesson and later discuss the experiments together with the junior teachers.

TRTS follow certain rules. The junior teacher, prior to the teaching situation, hands out a written preparation for the case study to all the participants. In Cologne, different ways of written preparations for TRTS exist. One that was developed by the Director of the Cologne VETTI, Mr. J. Martin Thees himself, is shown in Annex 2: Trial-run Teaching Observations. It has criteria for the main categories in:

- Planning competencies;
- Implementation competencies (with respect to content, methods and communication); as well as
- Teaching competencies in the class itself.

The worksheet shown in Annex 2 was developed for the participants in those situations in order to have a list of criteria and questions what exactly to look at. The guidelines are given to all the people observing the lesson and the focus is preparing the participants to talk about the teaching experiment later. It also helps teacher trainers to look at their own notes when they have to prepare for the "planning and development talk" with each trainee halfway through the training, as well as in preparing for the final report to be written about each individual trainee.

When correctly practiced, trial-run teaching gives invaluable quality feedback to trainees that will enhance their learning and give orientation to their improvements as vocational teachers.

In Cologne, TRTS are practiced very frequently - as mentioned above, in various group settings and with members of peer groups and project groups. Experience has shown that TRTS lose some of their "exam character" due to this frequency and varied settings, and hence trainees become more relaxed about them and look at them more as learning opportunities.

This is positive, because the real learning takes place in the counseling situations after the case-study teaching situations! Up to this point the trainees have planned and carried out a lesson and now they are open to feedback. Feedback can be given in the form of Cooperative Reflection Counseling, as described in Box 2 of this paper. It can also be done in different settings. It is of utmost importance that the trainee her/himself gets into the position that she/he comes to realize alone what to do differently next time.

Once again, it was discovered in the institute in Cologne that if giving advice here is practiced (instead of counseling!), then junior teachers will only accept this advice for the duration of the TRTS and will not change habits.

If, on the other hand, the trainees feel comfortable in these peer situations, then they may themselves come up with their own observations, like: "The students were so passive in participating. Do you think that could relate to my planning things too much, instead of involving them in the planning process more?"

If this is the conclusion of a talk at the end of TRTS, the trainees have learned indeed much more than by having received tons of advice by more experienced teachers of what to do better in this or that situation!

Furthermore, teacher trainers in Cologne believe that these TRTS should not be one-sided, with the same people always teaching and the same people always sitting and listening. Good teacher trainers themselves teach in various settings of vocational schools as well and let the trainees observe, listen and assess the good, but also the bad in senior teachers' lessons. One real situation, which some teacher trainers in Cologne put themselves into, is described in Annex 5.

8. The Field-related Group (*Fachseminar)* in Economics and Business Administration in 1998-2000

When junior teachers come to the teacher training institute, the key question for each seminar group in the beginning is certainly how to organize content and topics and how to relate objectives and essentials in a meaningful way. Annex 3:

Teacher Training in Economics and Business Administration (*Fachseminar*), illustrates the work done during the two years in my own group.

It should be mentioned here that this is just one example of one teacher trainer in one field. There are many more fields and many more teacher trainers, who might very well make other choices.

As can be seen there from my list of topics covered, the economics and business administration group placed a high importance on slowly adding tasks of higher sophistication.

What helped me as a teacher trainer in the economics and business administration group in my preparations was using the following didactical questions:

- **Q.: What should be covered in the first quarter of the training sessions? (Blocks I and II in Annex 3)**

A.: I found it particularly important to first expose the junior teachers to the different school careers in our branched out vocational education system in Germany (Block I,1-2). Criteria for good teaching were then examined and to this end we first worked on questioning techniques and how to get students to participate in lessons through skilled paraphrasing and affirmative commands in teaching (Block I, 3-5).

In a second block (Block II, 6-12) we learned how to turn content into topics in our lessons. For example, we would look at sales contracts in business administration, and I together with the junior teachers would jointly develop – for example – lessons on sales contracts aimed at making the topic interesting for different kinds of students. For example for a full-time commercial college class (*Handelsschule*) in office management we would design a lesson like "We want to enlarge our product range: how do we get information about pens and pencils?" This would lead to writing inquiries and eventually to a contract of sale cycle. After coming up with modules, we would select examples for the lesson and design lesson openings and conclusions for different groups.

- **Q.: Why do I put so much emphasis on working in learning fields and learning situations? (Block III: Learning Fields and Learning Situations)**

A.: In the third block of the field-related work (Block III, 13-18) the reader might notice the expressions "learning fields" and "learning situations". These characterize real-life or employment-related situations that are used to structure the learning in vocational education. Let's take an example in business administration: In the curriculum in business administration for practically all school careers you can find a sentence like "Students should be able to plan a marketing concept for a specific product".

Until 10 years ago this would have been covered by the teacher in business administration alone and he/she would have taught what a marketing concept is and then the students would have learned it by heart and produce their knowledge in multiple-choice test (and most likely forget it soon after!).

In planning a learning situation now, teachers from one school career (*Bildungsgang*), for example in a full-time commercial class would sit together and see how this situation could be covered not only by the teacher in business administration but also

- by the teacher in mathematics (since there is a lot of calculation involved when it comes to pricing the product);
- by the teacher in English (since the product might be sold in South Africa or India);
- by the teacher in German (since oral presentations of the marketing concept to the management of the company will be trained in this learning situation); and
- by the teacher in accounting (since the costs for designing and the revenues that will flow from a good marketing concept will have to be calculated).

I think it becomes obvious from this example that learning situations change our thinking as teachers in vocational education dramatically and require new thinking. This is trained in every field-related group and requires putting so much emphasis on this block.

- **Q.: How can this topic best be learnt? (Block IV: POLIS)**

A.: Learning fields and learning situations can be developed by teachers and junior teachers, but they can also be generated from methods and games that can be used in business administration and economics (like in Block III, 19-21).

My experience in preparing the strategy game POLIS (see Box 2) has shown that studying as well as teaching international economic policy can rather be learnt best by using this game that not only motivates but also kind of playfully teaches more international economics than a teacher can possibly get across in the same amount of time in conventional teaching.

Moreover, and that is the nice thing about this game, POLIS can be used at the beginning of the school year and together with the students (yes, with the students, too!) learning situations can be earmarked that are worth working on in the continuation of class teaching in economics.

In my own experience after having played POLIS, students in my vocational college wanted to focus much more on price mechanisms in international economics (since they did not quite understand, why there are so many agrarian products in the world, but apparently not everybody would benefit from that in the game and if so, they did benefit only at extremely high prices for food!). This apparent problem situation was used to structure my learning situations and thus referred to students' interests in economics (which, let us be honest, does not show off so obviously very often!)

- **Q.: How can I grade written and oral contributions of my vocational students? (Block V)**

  A.: A different way of teaching requires a different way of assessing students' accomplishments. The following techniques were used in my seminar in Block V. Reflection learning calls for independent student planning, implementing, monitoring and evaluating. If this notion is accepted, then assessing those learning processes has to go through the same cycle.

  This is why in this part of the field-related work, heavy emphasis is put on showing junior teachers how to organize written tests. Coming back to the marketing example, a written test would consist of an open task that would be turned into a marketing strategy. The students would have to show their abilities in planning, implementing and evaluating and thus prove a number of different competencies. Of course in such a test there is no master copy of the test in the hand of the teacher. Individual solutions will have to be assessed individually. This will be learned in Block V.

  Assessing oral participation is covered at length in this part of the training. For example, it is often said that group work is hard to measure and even harder to turn into quantitative grades. In reflection learning processes it has been found that it is useful to have more than 50% of the final grade come from oral participation. To this end qualitative indicators are introduced here, such as criteria for oral achievements.

One approach to assessing group results practiced with my students was the “fish bowl method”. At the end of a group activity or working group, the moderator calls one representative from each group to come into an inner circle, while the rest sits in an outside circle. The inside circle then discusses the achievements of each individual group vis-a –vis criteria previously agreed. The outside circle can speak up any time when someone thinks that the discussion is not accurate. The fish bowl continues until for each group a grade or validated accomplishment has been found.

- **Q.: Where will cooperation be successful and which learning methods are considered helpful in specific situations (such as projects, learning in peer groups, future labs, scenario techniques etc.)? (Additional Block)**

  A.: As can be seen from Annex 3 (Additional Block), there was a heavy emphasis in my seminar on special projects - teaching sessions going beyond the 45-minute rhythms. Future labs, scenario techniques and POLIS have been explained in some length in this paper already.

  For example, I used the first module in accounting in commercial apprenticeship as a way to learn to use reflection learning techniques in accounting (Additional Block, 2). My junior teachers developed lessons involving their apprenticeship students in their vocational schools in a situation where a school library would be set up (together with the German teacher). The task of the junior teachers now was to transform this project “school library” into a reasonable accounting system which documented books bought, sold or given away, balance sheets by the end of the year, profit or loss statements etc. I have never seen teachers develop so much interest in teaching accounting!

  The other block we dealt with is called the *Lernbüro*. Physically a *Lernbüro* is an office, not a classroom. The students carry out office work for small “artificial companies”. Each *Lernbüro* is run by a teacher or a team of two teachers who behave not like teachers, but more like the owner-operators of a small enterprise.

  The work in *Lernbüros* in NRW was started some 17 years ago and now *Lernbüro* work is a school subject in itself with 3 hours a week in most classes. Junior teachers learn how to teach in

Lernbüros when they are in the VETTIs, and *Lernbüros* are a part of every group in economics and administration as well as of the focus of the trial-run teaching situations.

- **Q.: And what will be the focus immediately before the exam? (Block VI)**

  A.: The focus immediately before the exam is of course on getting the whole field-related work rounded up. That means that colloquium exam situations will be role-played. Expectations for trial-run teaching situations (TRTSs) will be elevated to exam level and each junior teacher's reference book (see Annex 1) will be checked to ensure that all the necessary work has been completed (see Table 1).

Purposely, in order to "teach by example", teacher training in my field-related group of economics resembled trial-run teaching situations of my own junior teachers in school, with the teacher trainer in this group obliging himself to lay out his planning activities, list his objectives for the training session, carry out the seminar and at the end get feedback from his junior teachers on his performance in that particular training session. Written preparations of the teacher trainer were also open to the feedback phase at the end of each training session.

In this field-related group of economics and business administration my junior teachers first examined who were their students and what would interest them, and only then started developing lesson plans. They looked at learning processes in economics and began to develop more complex teaching learning situations. And finally they became comfortable with other vocational teacher functions in economics such as assessing performance, counseling students and parents and learning how to be comfortable with reflection learning processes in economics, through learning arrangements going beyond the 45-minute rhythms of our daily routines in vocational schools.

9. Monitoring and Evaluating Mechanisms by Teacher Trainers in Cologne – Continuous Improvement Assured

In this chapter, some monitoring and evaluation mechanisms will be described that are routinely being used in Cologne during and after each two-year training and certification period. The results of these evaluations are then fed either directly into the ongoing seminars or into the following cycles of teacher training.

Briefly, five different activities for quality control will be described in this chapter.

1. “Jour fixe”

The “jour fixe” is a regular meeting of all the teacher trainers. As a way of giving feedback among the teacher trainers and providing a forum for ongoing work among the various field-related groups (*Fachseminare*) and groups for general vocational pedagogy and didactics (*Hauptseminare*), bi-weekly to monthly meetings are held, which are called “jour fixe” in the Cologne vocational education teacher training institute terminology. The "jour fixe" brings together the entire teacher trainers in the institute.

These half-day to full day meetings have the function of critically monitoring the ongoing training cycle and providing a forum for discussion. For each jour fixe, 4-6 teacher trainers sign on as responsible moderators; they are in charge of clarifying the agenda with their colleagues, moderating and documenting outcomes. Lately meetings have focused on

- Implementing new legal framework for teacher training into daily work in the institute;
- Identifying training needs for teacher trainers; and
- Developing identical criteria for good lesson planning and implementation.

2. Further Training Programs for the Teacher Trainers

Training programs are also offered for teacher trainers in the institute and lately have focused on

- “Systemic Counseling”;
- Mastering “Topic-centered Interaction” (*TZI=Themenzentrierte Interaktion*), a communication approach;
- Working with new media (Internet, Multi-media) in field-related groups (*Fachseminare*);
- Developing special learning promotion programs for weaker students;
- Using scenario techniques and future labs comfortably with junior teachers and students;
- Identifying “creative ways” to release organizational duties in schools

These training programs for teacher trainers usually take place outside of the institute itself, and outside experts help. They take place a minimum of once or twice a year and last a weekend or a couple of workdays.

3. Training of New Teacher Trainers by the Institute’s Director

This part of the program is used whenever new teacher trainers are appointed to the institute. When new teacher trainers come to the institute, they usually need training in order to be equipped to carry out all the tasks of a teacher trainer competently. Of course, these senior teachers have already completed teacher trainings before, such as in the Teacher Training Center for Further Teacher Training in Soest, NRW (*Landesinstitut für Schule und Weiterbildung*), and very often have a lot of experience.

A typical preparatory training for new teacher trainers consists of 4-6 hour sessions each, for example in:

- Developing criteria for a "good" teacher trainer;
- Discussing and implementing counseling situations after trial-run teaching situations;
- Dealing with feedback from the field-related groups (*Fachseminare*);
- Accompanying written theses by junior teachers;
- Writing final reports for our trainees; and
- Assessing in a State Board Exam Situation

4. Evaluations in the Institute by Teacher Trainers

After each two-year cycle, evaluations of the program are done. Evaluation sheets are developed and distributed among the teacher trainers and the trainees. As a result of the evaluation, changes are made; in the last cycle for example, it was decided to put more emphasis on observing trial-run teaching situations in groups of junior teachers (*Gruppenhospitationen*), and the functions of the mentor programs in schools were strengthened.

The state board exam phase is also regularly up for evaluation. The last evaluation, for example, brought to light that the trainees seemed a bit weak in the didactical and planning parts of their exams, but on the other hand grades in the final reports of the teacher trainers correlated significantly with the final grades in the exams. It also came out that using the so-called "circular question method" more might help trainees in colloquium situations overcome situations in which they were blocked.

5. Evaluations in the Institute by Trainees

This evaluation is done on a voluntary basis by junior teachers who have been through the program. As a way of getting feedback from the trainees, the VETTI frequently asks the trainees to write down their impression of the program. The trainees describe their points of view, their experiences and their suggestions for future changes of the program. A flashback by a former trainee is given who has been through the two-year program and who has been in my field-related group of economics and business administration. Annex 6 gives her statement.

Annex 1: The Teacher Training Reference Book

Each junior teacher keeps a little booklet in which he/she writes down the different kinds of training they receive. In the teacher training reference book the six different teaching functions are listed, which are

- Teaching;
- Educating;
- Counseling;
- Assessing;
- Administrating/Organizing and
- Innovating.

For each essential training seminar – as listed in Chapter 5 – a cross-reference is made and it is summarized with its title, the number of hours and the name and the signature of the teacher trainer in this teacher training reference book. An extract from this book might look like this:

Vocational Education Teacher Training Institute, Cologne

XYZ

Institute Reference Book

Junior Teacher's Name: ____________________________

Function: Teaching Essential: Didactical Concept		
Topic	Hours	Teacher Trainer

Function: Assessments Grading Achievements – Promoting Students		
Topic	Hours	Teacher Trainer

….

Annex 2: A Form for Recording Trial-run Teaching Observations

Trial-run Teaching Situation Observations with Ms./Mr. …………… On Lesson In Topic Class

1 Planning the Lesson

Class Situation

Didactic Decisions

Selection of Content
- Reduction
- Setting priorities

Objectives
- Interdisciplinary
- Competency-based
- Oriented towards real life and employment
- Educational

Process Planning

Intended Students' Independence

Articulation

Work Forms

Media and materials

Learning Success Control

Innovative Potential

Conclusion for Planning Competency: **Didactic Competency**

2. Implementing the Lesson (Content)

Recognizable Phases

Independent planning of students

Shaping out objectives

Independent carrying out by students

- Appropriate level for students
- Content correctness
- Setting priorities
- Oriented towards real life and employment

Independent assessment by students

Learning Success Control

Conclusion for Implementation Competency (Content):

2. **Implementing the Lesson (Methods and Communication)**

Learning Arrangement
(Training, Lecture, Project)

Social Class Activity
(Group, Individual, or
Partner Work)

Didactic Function (Exercise,
Transfer, Application, Control etc.)

Patterns of Learning

Communication Competency

- Communication structure
- Clarity and Style
- Modulation

- Division of communication between students and teacher

Media and material usage

Student Participation and means to make students participate

Conclusion for Implementation Competency (Methods And Communication):

3. **Teacher Activity**

General Behavior/Activities (Security, Calmness etc)

Promotion of

- Self-orientation
- Methodical competency
- Learning competency
- Social competency
- Morale
- Communication competency

Activities in disruptions

Educational competency

Relation with the students
- Appreciation
- Understanding
- Emotions

Conclusion for Teacher's Activities: **Pedagogical and social competencies**

Annex 3: My Economics and Business Administration Group (*Fachseminar in Wirtschaftswissenschaften*)

(Each topic refers to 180-minute sessions)

Block I: Students in Different School Careers

1. We identify expectations within the *Fachseminar* of economics
2. First experiences with a vast number of school careers in our schools
3. We develop criteria for "good" teaching when we observe senior teachers
4. Educational backgrounds of our students in different school careers
5. We analyze the consequences of students' backgrounds for our lessons in economics

Block II: The Topics in our Lessons in Economics

6. The "good" teacher in economics
7. My path to find a topic
8. My lesson should have a topic – bringing in a perspective
9. Developing a didactical planning aspect
10. We develop a didactical analysis
11. Didactical work in analysis and learning situations
12. Alternative didactics in economics

Block III: Planning of Teaching and Learning Processes

13. Reflection learning, learning fields and learning situations in economics – definitions and dissociation
14. Learning objectives and competencies – where are the differences?
15. Contd.
16. Learning how to "learn" in economics
17. Sharpening our didactical profiles in economics
18. Analysis and structure of written case-study teaching experiments

Block IV: Enhancing Teaching Competencies - Preparation of a Strategy Game

19. We develop didactical principles for strategy games
20. We plan the strategy game POLIS
21. We submit roles, identify strategies and discuss teacher intervention mechanisms for POLIS

Block V: Annual Didactical Planning; and Safeguard, Assess and Grade Learning in Economics

22. After POLIS: what do students want to do with their new skills: we build learning situations in economics – also according to the students' interests!
23. Assessing student learning in reflection learning contexts
24. Independent student assessment in economics – does that work at all?
25. We work with the introduced school book in economics
26. We develop class tests, grade them and return them to our students in a meaningful way
27. We develop strategies how to measure oral participation in classes in economics and integrate it into our grading repertoire
28. Assessing group work creatively: the fish-bowl method

Block VI: Counseling, School Career Didactics and Specific Exam Preparations

29. Systemic counseling – what for in vocational schools?
30. Beginners classes in full-time classes of vocational colleges (*Höhere Handelsschulen*) – we prepare the first week of teaching these students together with our colleagues in our vocational schools
31. Counseling these students regarding their entrance into the labor market
32. Using videos in economics and business administration
33. Personal computers and Internet – how can it be integrated in economics?
34. Simulation of a school career conference and carrying out annual didactical planning in one school career (*Didaktische Jahresplanung*)
35. Simulation of a colloquium situation in the final exam

Additional Block: Further Training in Economics – Going beyond the 45-minute Rhythms

1. Cooperation Project among schools “Problems in our School” (see Annex 4) – 3 one day training sessions
2. Cooperation Phase within the institute “Reflection Learning in Accounting”– five 4-hour sessions in the institute
3. Planning, carrying-out and evaluating playing a management game with students – POLIS (see Box 1) – a two-day training course
4. Trial-run teaching situations by teacher trainers – Using a scenario technique in business administration (see Annex 5) – a weekend training course in a vocational college
5. Simulated Enterprise Offices in Vocational Schools (*Lernbüros*) – a one-day training course on how to work in *Lernbüros* shown in one selected vocational school

Annex 4: "Problems in our Lessons" – A Vocational School Class (*Höhere Handelsschule*) Finds Its Own Amazing Solutions Using Robert Jung's Method of the "Future Lab" (*Zukunftswerkstatt*)

Teacher trainers from the institute were asked by teachers from a specific vocational school to work with them and their students on the situation "Problems in our Lessons". The time span available was three whole teaching days (8a.m. – 3p.m.) in that school, bringing together a full-time vocational class of 28 students, 4 of their teachers, 15 junior teachers (most of whom knew this specific class as well) and 2 teacher trainers from the teacher training institute.

It was decided to use one method of Robert Jung for this teaching experiment. Robert Jung had done research in the 60s and 70s in Italy about bringing out creative potential in people and developed a method, which is widely known as *Zukunftswerkstatt* in German, the English translation would probably be "Future Lab".

In the first phase of a future lab, participants criticize the present situation; everything is allowed to be said without evaluation. Criticism is written on cards, structured, clustered and headlines for joint points are found.

The second phase throws the participants into a phantasy and utopian situation in which coming up with "wild" solutions is called for. The participants are asked to fantasize about utopian solutions and to present their solutions in words, texts, role-plays, or whatever comes to their minds.

The third phase brings the participants down to earth again, asking them to think about how they can realize their ideas in real life and which steps are necessary to do that. Finally, each group has to present its solutions, and milestones will be set up to monitor and evaluate the success of each plan.

In this particular school situation, the future lab was played on three consecutive school Mondays. It was decided that the two teacher trainers from the teacher training institute, who had had previous experience with future labs, would serve as the moderators of the teaching experiment. The whole class showed up on all three sessions and nobody left even a minute early. Breaks were made when necessary, but certainly not when the school bell rang.

In the first phase, the students came up with heaps of discomfort. Various interactive and group-dynamic methods were used to work with the whole group. After all the criticism was expressed it was piled, structured and clustered. At that point it was hard to believe that anything could be done about it. This phase lasted the first day.

However, the second phase came up with very creative ideas by the students and the junior teachers and the groups had enough time to research and present their ideas. The work forms and the intensity of the work transcended everything the students and the trainees had experienced before in school and in the VETTI, and a lot of laughter, but also sincerity and willpower was found on the second day of this experiment. The presentation of the utopias in the plenary by students and junior teachers was both funny and very creative.

Before the last day, the groups were mixed again such as before the second day and the students, trainees and teachers worked again on preparing strategies to implement their plans. To this end, some of them went out to research food prices, others went to talk to the director of the vocational school to convince him of their plan, and others went on the Internet to research information. In the end – late in the afternoon of the third day, long after school bells had rung for the students to go home! - the moderators invited the director of the school to attend the presentation phase and see which of the projects could eventually be turned into real-life projects in that school.

The director of that school was not easy to convince about the usefulness of these projects, but in the end he let the students and the junior teachers do the following things in the months thereafter:

- Plan, set up and run a student café in the entrance hall of the college;
- Develop action lines for a to-be-established "Mediation Board" at that college; and
- Have students participate in class conferences together with their teachers.

In fact, methodologies similar to that used in future labs in Germany are used widely in many organizations and meetings when open-ended thinking is intended. Such brainstorming approaches are as useful with students of vocational schools in Germany complaining about school problems as with politicians from the Ministry of Education in Ethiopia in identifying bottlenecks in current teacher qualifications for commercial colleges or with teacher trainers in South India trying to overcome old structures in teacher training and using this method in order to plan their new teacher training institute structure.

Wherever it is used, in the end it is always a fascinating method that brings out both intuitive-emotional capabilities as well as rational-analytical ones in all the participants and it is always a fun-way of learning!

Annex 5:" Paving the Future" – Using Scenario Techniques to Teach Future Planning to IT-Students and Junior Teachers

Scenario techniques are methods that can deliver pictures of future situations. Scenarios are not prognoses, neither are they utopias and fantasies like future labs, but they provide quantitative data and information with the help of which detailed descriptions and possible future situations can be developed.

In each go, three different scenarios are developed:

- A positive scenario which describes the most advantageous future (best-case scenario);
- A negative scenario which shapes out the negative aspects (worst-case scenario); and
- A scenario that extrapolates current trends into the future (trend-extrapolation.

Some of the teacher trainers in the Cologne institute work with scenario techniques and one teacher trainer in Cologne carried out an interdisciplinary experiment working with scenario techniques, with an adult class in an Executive MBA Program specialized in computer science (*Fachschule für Wirtschaftsinformatik – Staatlicher geprüfter Betriebswirt),* together with an Information Technology (IT)- apprenticeship class of systems analysts (*Systemanalytiker*).

Participants were these two groups of students, about 10 junior teachers, and two experienced junior teachers on three consecutive whole days working an approximate 24 work hours. The work was done in the 5 classical phases of a scenario technique.

The starting point in the first phase is a problem where solutions are being desperately looked for. In the school situation with the classes mentioned, both groups had strong interests as well as a strong background in IT (one group was more focused on the commercial aspects, the other more on the technical ones).

The starting question was:”When you think of IT technology in Germany in the next 20 years, which opportunities and which risks do you see?” The answers were structured and clustered, for example in our case into economy, environment, society, and technical development.

In the second phase (which is called "impact analysis and descriptor definition") the clustered answers are used to find certain influential factors. Quantitative factors, for example the development of PC usage in Germany as well as qualitative ones, the attitude towards new technologies in Germany, were assessed. Of course, it is essential to have prepared a good documentation of information beforehand and to let the students also use other sources of information (such as the Internet) in this phase. In scenario techniques, this is the phase of gaining information and identifying factors that will influence the previously identified areas.

In the third phase, each factor, with its descriptors, gets projected into the future and its impact measured (e.g. positive technological developments might be counterweighed by measurements from the German data protection Board). Different descriptors might influence the trends differently, but their influence is always measured quantitatively if possible.

Phase 4 is the most interesting one, in which holistic scenarios of the future are drafted based on the quantitative and qualitative data. In our experience it was interesting to have more than 3 groups develop the different scenarios (best-, worst and trend). Having six groups instead of only three has proven to be ideal in order to be able to compare different views in each area. This phase ends with a presentation of the group results.

Finally, in the last phase, activities and reflection patterns are developed in order to find out what can be done to reinforce - or if it is undesired, to avoid - a certain trend. To this end a catalogue of activities is made that raises questions like:

- What can we do?
- How do we have to implement it?
- What might be the obstacles?
- How can we deal with them?
- Etc.

Scenario techniques were used in the German car industry at the beginning of the 90s a lot when the car crises was at its height and companies like VW, Daimler and Porsche were facing serious restructuring problems. Apparently, some of the German carmakers found creative solutions to come out of this crisis, while others did not!

It is not that long ago that these methods found their way into vocational schools in Germany. As can be seen from this example, the amount of reflection that is done when this method is used is quite amazing. It should be said, however, that running this method requires a lot of experience as well as discipline on the side of the moderators.

Annex 6: Flash Back – A Former Trainee in the VETTI in Cologne Looks Back After Completing the Program

"I did my teacher training from 1998-2000 in Cologne. Among others, Michael Axmann was one of my teacher trainers (*Fachseminarleiter*).

Teacher training in Cologne was certainly interesting if not always the way you expected it to be. This is one of the things typical for the Cologne institute – unconventional methods. Before I came there I expected to be trained in different teaching methods, provided with a lot of "tricks" and good advice. What I found was questions with no one providing answers but myself. This might sound unpedagogical, but what at the beginning seemed arbitrary, turned out to have a method behind it indeed. You had to find your own way. No one ever told you that what you did was good or bad – they just provided help in analyzing yourself.

The very first week, for example, felt more like a course in psychology than in didactics. We were asked to make ourselves the subject of discussion by analyzing our "biography". What the hell does that have to do with teaching, I thought. Well, I can tell you. Knowing yourself, knowing your reactions towards people, knowing how you yourself behaved as a pupil, knowing your innermost strengths and weaknesses – all that makes you acknowledge the kind of teacher you are and enables you to define your role as a teacher.

The courses were divided into "*Hauptseminare*" (main seminars concentrating on basic didactic work without referring to any special school subjects) and so-called "*Fachseminare*" (subject-related seminars providing information about certain didactic approaches for the specific subject, e.g. business studies).
The good thing about the **main seminars** was, that we were free to choose from a variety of topics. In that way, everyone had the possibility to choose something meeting his/her specific needs, e.g. if you felt you needed to learn something about how to handle classroom conflicts, then you would choose the corresponding course. As you met different teacher-trainees and teacher trainers every other month or so, the main seminars not only offered a wide range of topics but also a wide range of people to discuss with and to learn from.

The **subject-related seminars** were quite another matter, but nonetheless very instructive. They kind of got down to the core of it. If the things discussed in the main seminar often sounded vague and you didn't really know how to put them into practice at school, the subject-related seminars offered help in doing so.

Of course, none of the seminars would have been of any use without the daily work at **school**. With the help of experienced teachers who we were allowed to observe during class and who watched us doing our first steps in classroom, I became continually more experienced and self-confident. But again here, as in the seminars, it was mostly a question of your own initiative whether you learnt something or not. You had to find teachers to tutor you, you had to make them watch and discuss your lessons – all extra work not included in the teacher's salary. I was lucky to have found at least three teachers of that kind who accompanied me throughout my teacher training and whose feedback was invaluable to my learning process.

Communication between the junior teachers was regarded as highly important by the Cologne institute; so we were asked to form **peer groups** of three to six in order to discuss classroom matters. Those peer groups were not tutored or supervised by anyone; it was purely a matter of self-steered learning by exchanging experiences and discussing problems arising in school. Although it had a compulsory touch behind it, I quite liked the idea of being together with peers. It was comforting and reassuring to find out that they had similar problems. The peer groups provided room for discussing such matters and finding solutions to them.

The last thing I would like to mention are a couple of **special projects** that were offered during the two years of teacher training. Some were compulsory, others on a voluntary basis. There was a "pedagogical week" toward the end of the second year with all kinds of workshops, a ski-holiday focusing on group dynamics, a so-called "future workshop/scenario?" together with pupils and teachers of a vocational school and many other activities. I preferred the special projects to the regular seminars because they offered facilities the Cologne institute could not offer. The future workshop/scenario for example, was much more instructive than the theoretical seminars because it was a "real" situation with pupils and teachers, not a constructed situation. Also, during most projects, the atmosphere between junior teachers and tutors was quite a different one. It was a good chance to get to know each other and also find out some personal details both from fellow trainees and tutors.

Summing up I can say that those two years of teacher training provided me with invaluable information for my further career. It was not what I expected it to be in the beginning and I know that many fellow teachers were not quite content with the methodological approach of the seminars. For many (and at times also for me) there was a certain lack of input. Most courses consisted mainly of discussions and analyses of certain classroom situations while there were only little tips on how to manage them. Being a junior teacher in the Cologne institute required the ability to work independently as well as a potential for self-analysis and "self-steering". But only in that way was I able to find my "professional self"."

8225

Evaluating Vocational Training Programs

A Practical Guide

Gordon Hunting
Manuel Zymelman
Martin Godfrey

A World Bank Publication

Evaluating Vocational Training Programs

A World Bank Publication

Evaluating Vocational Training Programs

A Practical Guide

Gordon Hunting
Manuel Zymelman
Martin Godfrey

The World Bank
Washington, D.C.

Manufactured in the United States of America
First printing April 1986
Second printing August 1988

Users of this book are welcome to copy the evaluation forms—tables 1.1 and 4.1 and the materials in the appendixes—or to adapt them to their own needs.

Gordon Hunting is a technical educator in the East Asia and Pacific Regional Office of the World Bank. Manuel Zymelman is a special adviser for the economics of education in Africa for the World Bank. Martin Godfrey is a fellow at the Institute of Development Studies, University of Sussex, United Kingdom.

Library of Congress Cataloging-in-Publication Data

Hunting, Gordon.
Evaluating vocational training programs.

1. Technical education—Evaluation. 2. Industrial arts—Study and teaching—Evaluation. 3. Vocational education—Evaluation. I. Zymelman, Manuel. II. Godfrey, Martin. III. Title.
T65.3.H86 1986 607'.1 85-32309
ISBN 0-8213-0703-7

Contents

TABLES

Preface

This book is the culmination of a journey that started several years ago when experts from multilateral and bilateral aid agencies met to discuss the need to develop a uniform methodology for evaluating industrial training. As a result of this and subsequent meetings, the Agency for Technical Cooperation of the Federal Republic of Germany, the Overseas Development Administration of the United Kingdom, the Swedish International Development Agency, and the World Bank decided to underwrite the cost of producing a comprehensive evaluation guide.

The project required the cooperation of economists, educators, and vocational and technical specialists. We were fortunate to have the advice and help of Peter Sloane, Solomon Cohen, and Gunther Kolheyer during the writing of this manual, and we thank them wholeheartedly. Special recognition should go to Douglas Shaw of the Operational Development Section of the International Labour Organisation, who participated in our mission to Indonesia, where the manual was tested in the field, and who contributed many valuable suggestions to the final version.

We are also grateful to the representatives of multilateral and bilateral agencies who, at a meeting in London in July 1984, discussed a preliminary version of this guide and offered constructive criticism and helpful suggestions.

Introduction

This guide is intended to fill a gap in the resources available for evaluating training programs. The aim is not to write another textbook—with extended definitions of concepts, discussions of their theoretical underpinnings, and references to the literature—or another lengthy cookbook to guide the completely uninitiated reader step by laborious step through every problem and its variations. Rather, it is meant to be a systematic checklist for evaluators of vocational training institutions and for directors of schools or skill centers who want to identify the areas of their own institutions that need improvement.

As with any guide, the type of questions and the data requirements have to be adapted to the specific task at hand and to local conditions. For evaluation of a central training system, more specific questions may be needed; for assessments of in-plant training, many of the suggested questions may be superfluous, and for such problems as comparing the cost-effectiveness of different modes of training, the section on evaluating the efficiency of operations may be omitted or used as background. Although the guide is most useful as a tool for identifying critical points for improving the efficiency of training institutions or systems, it can easily be adapted, in part or as a whole, to all types of evaluations, and its usefulness is not confined to industrial training.

As chapter 1 emphasizes, the approach to the evaluation of a project depends on the purpose of the analysis. For this book we assume that we are engaged in evaluating, from the point of view of society, a training institution that offers pre-career, entirely off-the-job courses.

Diagnosing the efficiency of operations and, in particular, identifying inefficiencies and their causes require both qualitative and quantitative analysis. Chapter 2 explains the use of three checklists and supplementary worksheets (placed at the end of the text as appendixes) for these purposes. Appendix A (the checklist for the qualitative evaluation) provides a format for systematically recording subjective judgments on the key factors in the institution's internal operations. Appendix B (the checklist for the quantitative evaluation) calls for information on resources, costs, and student performance. (Questionnaires and forms for collecting supporting observations and data for these checklists are in appendixes D and E.) Although our main concern is with individual institutions, we have also included, in appendix C, a checklist and forms for describing the policies and procedures of the responsible central agency that affect the institution.

The checklists can be used not only for formal evaluations but also for periodic in-house assessments by school management. The user is free to adapt the checklists and worksheets to the particular occasion and institution. For example, if a school is using the checklists for its own evaluations, not all the supporting material in appendixes D and E will have to be collected anew each time. And whether or not a school undertakes regular self-evaluations, administrators may find that many of the worksheets are useful for keeping running records of operations.

Chapter 3 describes methods for assessing costs and outcomes in order to evaluate external efficiency—the effectiveness with which an institution fulfills its purpose. The literature on the subject emphasizes quantitative assessment—increased earnings of graduate trainees, employment rates of graduates, and so on. This chapter discusses extensively various cost-outcome measures but also makes the point that many outcomes are not easily quantified and that observations and interviews are important aids in interpreting the quantitative data. Examples of questionnaires that might be used to interview employers and former students concerning the value of the training are provided in appendix F. Because the indicators described in this chapter would be collected by outside evaluators rather than by schools, we have gone into less detail in this chapter than in that on efficiency of operations. Nevertheless, the purposely concise discussion of measures of effectiveness should be of interest to school administrators, and the examples of questionnaires may be useful in the school's own program of following up the employment experience of graduates.

Chapter 4 presents a compact format for summarizing results of the evaluation, using a numeric scale that can be used to compare several institutions as well as to identify the strengths and weaknesses of particular institutions. In addition, it suggests concrete procedures for conducting an evaluation, provides a sample timetable, and discusses issues that have to be considered in drawing up and administering questionnaires.

Throughout this guide we stress that an evaluation is much more than a series of cardinal measurements that somehow can be manipulated to yield a single figure on an efficiency scale. An evaluation also must include the impressions and qualitative assessments of experts whose experience provides a solid basis for judgment. It is hoped that the gestalt approach suggested here, which permits the blending of quantitative indicators with informed judgments, will be a further step toward the development of a comprehensive evaluation methodology.

1

Defining the Purpose of the Evaluation

Project evaluation involves the ex-post analysis of the functioning, outcomes, and costs of a project. If the evaluation is done as part of midterm monitoring, it will focus on ways of improving the project (for example, by redesigning its mode, curricula, or management) or perhaps on decisions about its continuation, expansion, or replication. If it comes at the end of a project, it will be mainly concerned with the project's success or failure and with drawing lessons applicable to subsequent projects.

The nature of the project is important to evaluation. Are we looking at a training system as a whole, a training institution, or a course? If at a course, is it intended for precareer training or for upgrading? Is it short or long? Off-the-job or on-the-job? The objectives of the project also affect our approach. Are the objectives defined in terms of efficiency, in one sense or another, or of equity? Finally, we need to know from whose viewpoint the analysis is being conducted.

The Nature of the Project

Evaluating a single precareer course that is entirely off-the-job is a straightforward type of project analysis. Here it is relatively easy to isolate costs and benefits. In the case of a course intended to upgrade skills, workers' performance before and after training may be measured. Evaluating on-the-job training is more difficult because of questions of costing that require special treatment.

Analysis of an entire training institution (unless it offers only one course) is inevitably more complex than evaluating single courses. Many institutions offer courses in a bewildering variety of subject matter, length, skill level (initial or upgrading), format (on- or off-the-job, full-time or part-time), and purpose (vocational or nonvocational). In such cases analysis of the demand-supply situation has to cover a wide range of occupations, and outcome-cost analysis, whether concerned with external or with internal efficiency, has to be disaggregated to the level of the individual course. The same is true of analysis of a whole system, unless it consists of only one mode. Thus, evaluation of, say, an on-the-job apprenticeship system can be conducted at an aggregate level, but evaluation of a system that includes several routes has to be disaggregated.

The Objectives of the Project

The criteria used by a project analyst obviously depend on the objectives of the project, but identifying these can be difficult. Projects often have multiple, sometimes conflicting, objectives. Most projects aim at being efficient, in the sense of achieving the highest possible outcome-cost ratio, but efficiency has several dimensions.

Efficiency can be defined in terms of academic performance—which may not be fully measurable by test or examination scores, including as it does increases in skills, changes in attitudes, cognitive development, and acquisition of knowledge. We need to know who is supposed to learn what, under what conditions, and by what date.

Efficiency also can be defined in terms of skill on the job after graduation. Measurement of a project's impact in this respect will not be easy in any case, but it will be impossible unless we know what the project was trying to achieve.

Another dimension of efficiency is productivity and income in employment, which may or may not vary directly with the degree of skill acquired by the trainee.

In projects that are not oriented toward the labor market efficiency may be particularly difficult to define. Gains in academic achievement or acquisition of skill may be among the results, but the project may also have important, not easily measured, effects on the morale or well-being of the participants. (Adult literacy classes are an example.)

Finally, a project's efficiency may be defined partly in terms of its indirect or spillover effects, such as a change in the role of women or the wider impact on the labor market of changes in the supply of skills.

For some projects success is measured in terms of their impact on equity. Their objective is to improve the relative position of a given underprivileged group with respect to any or all of the effects discussed above.

Whatever the objectives of a project, the analyst needs to have them clearly set out before he can select his criteria for evaluation. Where there are multiple objectives, and particularly if they conflict, it may be necessary for him to assign weights to them to arrive at an overall assessment.

The Point of View

The criteria used in the analysis also depend on the viewpoint that is adopted. Are we looking at the project from the point of view of the nation, or of society as a whole (the most usual practice)? From the narrower budgetary point of view of the government or the treasury? Or from the perspective of the aid agency involved in financing the project, the local community, or the firm that sponsors a trainee or an individual student? Taking any of these viewpoints can be useful for different purposes, and each implies a variation in method.

The Initial Checklist

In order to be clear about the purpose of a project analysis, it is useful to fill out an initial checklist (table 1.1). In the following chapters we will assume, for purposes of exposition, that we have checked the following items: A.2, B.1.b, B.2.a, B.3.a, B.4.a, C.1.a–c, D.1. In other words, we assume that we are conducting an evaluation of a training institution that offers long-term precareer, entirely-off-the-job courses; that the project's objectives include efficiency in all except the non-labor-market and spillover senses; and that we are appraising it from the point of view of society as a whole.

Table 1.1. *Initial Checklist: Purpose of Project*
Instructions: Check appropriate box.

A. Stage of evaluation	
1. Midterm	☐
2. Final	☐
3. Other (regular or periodic)	☐
B. Description of project	
1. Scope	
a. Whole system	☐
b. Multicourse training institution	☐
c. Single course training institution	☐
d. Single course	☐
2. Length of training	
a. Long (more than three months)	☐
b. Short (up to three months)	☐
3. Focus	
a. Precareer	☐
b. Upgrading	☐
4. Mode	
a. Entirely off-the-job	☐
b. Entirely on-the-job	☐
c. Mixed	☐
C. Project objectives	
1. Efficiency	
a. Academic performance	☐
b. Skill on the job	☐
c. Productivity in employment	☐
d. Non-labor-market	☐
e. Spillover	☐
2. Equity	☐
D. Point of view	
1. Nation or society	☐
2. Treasury	☐
3. Aid agency	☐
4. Local community	☐
5. Firm	
6. Individual student	☐

2

Evaluating the Efficiency of Operations

This chapter deals with the efficiency of operations (the internal efficiency) of a technical school or vocational training center. It examines the main aspects of internal operations, including the content and relevance of the courses, the teaching methods, the quality of the staff, the adequacy and utilization of space, the appropriateness and use of equipment, the effectiveness of management, and the interrelations with industry.

Evaluation of the efficiency of operations (accompanied by an understanding of the underlying factors) is a powerful management tool, both for the director or principal of the school and for the ministry or agency responsible for supervising the institution. It is particularly important when a system or institution is being expanded or when measurements of external efficiency indicate deficiencies in the system that call for improvements in operations. Evaluation also provides a basis for comparing the performance of different institutions.

Assessing efficiency, and in particular identifying inefficiencies and their causes, require subjective judgment as well as quantitative analysis. The diagnosis must be carried out by an experienced technical educator, and it requires the full involvement and cooperation of the senior staff of the institution concerned.

The process of evaluation starts with identification of the key factors that are commonly recognized as being of primary importance in determining the efficiency of a system. In this chapter we identify those key factors and describe how they are assessed through the use of checklists, questionnaires, and other means.

A training program can be judged only after observing the teaching process, including practical laboratory and workshop activities, to assess the method and quality of instruction. Examination results provide data for the quantitative study of internal efficiency, but the quality of the examinations administered and the relevance of examination methods to the training must also be assessed. The source and quality of students and trainees and the processes by which they are selected and counseled at entry and assisted to find appropriate employment after training ends should also be evaluated.

An important factor in determining efficiency is the quantity and quality of teaching staff. The evaluation team will need to look at the procedures for selection, appointment, assignment, and promotion of staff, as well as their salaries and other conditions of service. The quality of staff is assessed and deficiencies and training needs are identified by studying personnel records that show qualifications and experience and by observing teachers' performance, the quality of the teaching programs and materials, and the students' work. The utilization and performance of support personnel, particularly laboratory and workshop employees and professional staff such as librarians, must also be evaluated.

The quality and effectiveness of training can be affected significantly by the adequacy and utilization of physical resources (buildings, equipment, and materials). Overprovision and underutilization are as inefficient as underprovision, with its consequent overcrowding and inadequate facilities. Here, as for the other key factors, the evaluation team must weigh carefully the quantitative and qualitative assessments. Facilities can be measured in unit areas of teaching space or unit costs of equipment; the actual utilization of space or equipment can be compared with the maximum theoretical use to yield utilization factors. For each quantitative measure there are broad values or norms that are accepted internationally as good practice. However, it must be kept in mind that an apparently adequate quantitative figure may conceal inefficient or ineffective procedures. For example, a reasonable average level of utilization (say, 75 percent for workshops) may represent extreme overcrowding for part of the time and zero use for the remainder. Workshops and equipment may be in use most of the time, but the training exercises and activities may be of poor quality. The expenditure on equipment may be reasonable, but the equipment may be inappropriate for the objectives of the training program.

The effectiveness of the school's management is evaluated by examining the organizational structure and the management style and effectiveness of the senior staff. The latter can be judged only qualitatively, but that judgment will be illuminated by the evaluation of other key factors; that is, good or poor ratings in such areas as utilization of facilities are part of the supporting data for judging management effectiveness.

The interrelationship of the training institution with industry is probably the most important single indicator of its efficiency and effectiveness. This interrelationship can be measured in terms of employment of trainees, formal links between the institution and industry, the staff's industrial experience and connections, and the extent to which the institution engages in production or other practical activities and creates an environment similar to that of industry. (These measures overlap with some used in determining external efficiency.)

Normally, a training center or school is part of a vocational training or technical education system and is responsible to a government organization such as the ministry of labor, manpower, or education. The system may impose constraints or conditions that have a major influence on the operations of the institution. For example, in an extremely centralized system in which curricula, courses, and training materials are developed centrally, teachers are recruited and appointed centrally, and all materials are procured and distributed from a central office, there may be little scope for the school or center to control its own efficiency. It is therefore necessary in any evaluation to look at relevant aspects of the national system.

We have mentioned costs only incidentally, since they are normally included under external efficiency. However, patterns and levels of expenditure on training activities—not just raw numbers—should be taken into account in evaluating operations. For example, a comparison of cost-effectiveness of two similar training institutions could give misleading indications of effectiveness if one center achieved lower costs over the short term by, for example, failing to replace equipment or restock consumable materials, or neglecting maintenance. The checklists and worksheets include questions designed to identify satisfactory or unsatisfactory budgetary practices.

The Qualitative Evaluation

Experience has shown that certain key factors, summarized in the outline below, have a primary influence on the overall efficiency of an institution. The checklist in appendix A (supported by appendixes D and E) uses these factors as a systematic basis for guiding the evaluation team in making value judgments on the quality of the institution's operations. Those judgments must be made by experienced technical educators and must take into account the environment and objectives of the project, as described in chapter 1. The goal is to build up a profile that shows the state of health of the institution with respect to each key factor so that deficiencies can be identified and the scope and nature of remedial action can be determined.

Level, Content, Quality, and Relevance of the Training Program

- The format and content of the curricula and syllabuses
- The implementation of the courses: the teaching process, methods, materials used, and training activities
- The examination scheme; content and conduct of examinations

Students

- Selection methods, entry qualifications, and sponsorship
- Counseling, guidance, placement, and follow-up
- Student-staff relationships

Staffing and Staff Development

- Staffing policy, salaries, and other conditions of service
- Selection and qualifications of staff
- Size and quality of staff; turnover
- Size, quality, and salaries of support staff
- Staff development plans; training (pre-service and in-service)

Physical Resources

- Range, areas, and layout of accommodations
- Facilities, services, and maintenance
- Range, relevance, and adequacy of equipment
- Equipment use, maintenance, and repair
- Replacement and updating of equipment
- Use, replacement, and storage of consumable materials

Organization and Management

- Institutional development plan and objectives
- Organizational structure and responsibilities
- Management information system: availability and use
- Management style and effectiveness

Interrelations with Industry

- Training and employment
- Formal links and services
- Industrial links of staff
- Industry-like environment

The Quantitative Evaluation

Quantitative indicators of efficiency of operations include student flow rates and performance, staff load, provision and utilization of facilities and resources, and breakdowns of training costs. The evaluation team uses the checklist in appendix B, backed up by appendixes D and E, to record this information.

Student Flow Rates

The most useful measures of student flow are

- *Admission rate* (the proportion of applicants admitted to the course)
- *Dropout rate* (the number of students who leave during the course without taking final tests or examinations, as a proportion of students enrolled at the beginning of the course)
- *Repetition rate* (the number of students who repeat a stage of training as a proportion of the students enrolled in that stage in the previous year)
- *Pass rate* (the number of students completing the course successfully as a proportion of the students enrolled in the final year or stage of the course).

Student Performance (Efficiency Indexes)

An overall indicator of internal efficiency in terms of student performance is found by dividing the number of graduates by the number of students entering at the beginning of the course to yield a percentage. If the amount of repetition is significant, however, it is more useful to employ a measure that indicates how much additional time over the planned time is required to produce graduates. Examples are

- Average time required to produce a graduate (total student-years spent on training (including time spent by dropouts) divided by number of graduates produced; this can then be compared with planned time
- Output-input ratio (the number of graduates, multiplied by planned course length in years, as a proportion of the total number of student-years spent in training).

Staffing

Indicators include

- Student-teacher ratio (by course or for the institution)
- Average class size (preferably separately for classroom work and laboratory or workshop activities)

- Average teacher workload (normally expressed as teaching hours or contact hours per week).

Facility Schedules and Utilization of Space

Indicators include

- Average area of workspace (area of classrooms, or laboratories, or workshops, divided by the normal working capacity)
- Average areas of support spaces (area of library, communal spaces, living accommodations, and the like divided by number of students using each kind of area)
- Space utilization (the actual student occupancy of total teaching space as a proportion of the total capacity of the teaching space).

Costs

The most important cost measure is the cost per student per year or cost per graduate. Other analyses of cost also provide valuable comparative data:

- Staff salaries as proportion of total cost
- Cost per student per year for consumable materials
- Maintenance cost as proportion of capital costs.

The Central Training System

The section deals with methods for evaluating the main aspects of the central government training system to gain an understanding of the context within which the training institution operates. Such an evaluation can also provide the basis for a study of the technical and vocational education system as a whole. Appendix C provides a format for recording observations and data.

The key factors in evaluating the central system are

- Policies, planning, and development
- Central and regional control
    - Training programs and courses
    - Staffing
    - Physical resources
    - Finances
    - Management organization

3

Evaluating External Efficiency

Conceivably, an institution could be extremely efficient internally—making good use of staff and physical resources and achieving a high ratio of graduates to entrants—and yet turn out graduates who fared no better in the workplace than untrained workers. External efficiency—how well the institution fulfills its stated purposes—is the subject of this chapter. Much of the information needed for assessing external efficiency—costs, outcomes, and their relation—can be expressed quantitatively. As in the analysis of efficiency of operations, however, informed judgment is essential in determining what kind of information is pertinent and what weight should be given to the various indicators.

Cost

How cost is defined depends on the point of view from which the project is being appraised. Since in this case we are taking the point of view of society as a whole, we are interested in the *social opportunity cost* of the project: what will society have to give up to build and operate this training institution? If we were looking at it from a narrower point of view—that of an individual, a local community, or even the treasury—we would still be interested in opportunity cost, but from that particular viewpoint.

The first step in calculating the cost of a project is to analyze from project documents and audited accounts the costs incurred during the gestation of the project—costs of planning, preparation, land value, construction, and equipment. These are *capital items* that depreciate over the lifetime of the project. Since tying up capital also means forgoing an annual return that could have been obtained by using that capital in another way, it is usual to multiply the cost of capital investment by an annualization factor that reflects both depreciation over the lifetime of the item and the return to the capital in an alternative use (that is, the social rate of discount, which is not necessarily the same as the official interest rate). The annualization factor (a) for any given expected service life (n) and social rate of discount (r) is given by the formula

$$a_{r,n} = \frac{r(1+r)^n}{(1+r)^n - 1}.$$

Values of the annualization factor for each expected service life and social rate of discount are found in table 3.1. If, for example, the price of a piece of workshop

Table 3.1. ***Values of the Annualization Factor***

	r (percent)				
n	*0*	*5*	*7.5*	*10*	*15*
1	1.000	1.000	1.000	1.000	1.000
2	0.500	0.538	0.557	0.576	0.615
3	0.333	0.367	0.385	0.402	0.438
4	0.250	0.282	0.299	0.315	0.350
5	0.200	0.231	0.247	0.264	0.298
6	0.167	0.197	0.213	0.230	0.264
7	0.143	0.173	0.189	0.205	0.240
8	0.125	0.155	0.171	0.187	0.223
9	0.111	0.141	0.157	0.174	0.210
10	0.100	0.130	0.146	0.163	0.199
11	0.091	0.120	0.137	0.154	0.191
12	0.083	0.113	0.129	0.147	0.184
13	0.077	0.106	0.123	0.141	0.179
14	0.071	0.101	0.118	0.136	0.175
15	0.067	0.096	0.113	0.131	0.171
20	0.050	0.080	0.098	0.117	0.160
25	0.040	0.071	0.090	0.110	0.155
50	0.020	0.055	0.077	0.101	0.150

Note: n, service life in years; *r*, social rate of discount.

equipment is $10,000 and its expected service life is 13 years, at a social rate of discount of 10 percent the annualization factor is 0.141 and the annual cost is $1,410.

The second step is to calculate the *recurrent costs* involved in the operation of the project: costs of teaching, training, administrative, and service staff; costs of materials, tools, books, maintenance, and replacement; costs of utilities; and costs for travel, consultants' services, medical services, insurance, and so on. In a situation in which prices change because of inflation, a price adjustment must be made so that costs will be in constant values. Where there is a physical input that involves no payment, such as the services of volunteer workers and teachers and even the time of the trainees themselves (if society is losing their output as a result of their participation in the project), we should assign to these services an opportunity cost in terms of forgone earnings. (These may admittedly be zero if no alternative opportunity for the use of that time exists.)

In some cases we also have to adjust for differences between market price and *social opportunity cost*, or shadow price. For example, from the point of view of society, as opposed to that of an individual, a tax on a piece of equipment should not be counted as a cost; similarly, a subsidy to a particular input reduces its price but not its social cost. So, taxes of all kinds should be deducted from the price of inputs, and subsidies should be added to that price. Also, if there is widespread unemployment or underemployment, so that labor can be withdrawn from an alternative use without much affecting output, the social cost of the labor is likely to be lower than its wage. If there is no active land market, the rent paid may understate the social cost of using a piece of land for the project; some estimate then has to be made of the returns that could be obtained from using the land in the best alternative way. Finally, if foreign exchange is undervalued (as indicated by a chronic balance of payments deficit and lack of foreign exchange reserves), imported inputs have to be valued at a price higher than the market price.

In this way it is possible to put together a year-by-year stream of costs adjusted for inflation and, if necessary, for differences between market price and social cost. Time series of costs by type of expenditure can be compared with costs of other similar institutions. An analysis of the trends of the level and structure of costs can also indicate future tendencies.

Outcome

Outcomes of a training project are assessed at different times and using different measures. *Educational* outcome can be measured at the end of the training period; application of *skills* and impact on *development* can be evaluated only after the trainee has returned to the workplace. Information on these latter types of outcome can be difficult to obtain. Follow-up studies of graduates provide data for only the first years of work life. Government statistical agencies may conduct regular, general surveys of employment and earnings, but they are likely to be highly aggregated and confined to the modern sector. Surveys of private sector salaries (sometimes carried out by private consulting firms) and of civil service salary scales may be of some use. Ways of supplementing these sources through direct observation and interviews are discussed below.

In measuring educational outcome we are interested first in knowing or estimating the success rate (the ratio of a given cohort of graduates from the final year of the course to the number who entered in the first year). The success rate reflects not only the pass rate in the final examination but also dropouts and repetition of course work and examinations by students; information on all these phenomena is useful. In addition, more sensitive measures of educational outcome are desirable. Ideally, the analyst will want to observe the learning process, hold discussions with students and teachers, and perhaps administer his own tests to measure the educational gains made by the trainees in comparison either with their own pretraining scores or with the scores of a control group similar to them in every respect except exposure to this form of training. These test results could be compared with results of external examinations. For example, examination results in institutions that take the program's graduates can be surveyed for evidence of the program's impact on the graduates' performance, compared with performance of trainees from other backgrounds. Examination and test results are often collected and analyzed by the responsible ministries. There may, indeed, be a government department or agency that is primarily concerned with the internal efficiency of training institutions and carries out regular surveys of examination systems, teaching methods, performance, and attitudes. In some countries results of government trade tests of craft skills can be a useful guide to the educational outcome of craft training. Directors of institutions that feed into the program being evaluated or of those that take the program's graduates can also provide useful information and comments.

For skill and development outcomes, the most promising source of information is probably the workplace. ("Workplace" should be interpreted broadly to include informal as well as formal places of work and such places of "nonwork" and job-seeking as marketplaces, factory gates, and official and unofficial employment exchanges. Managers of exchanges, as well as job-seekers, are useful sources of information.) What difference does the specific type of training make in the skill with which trainees do their jobs as compared with either their pretraining level of skill or with a control group? Again, personal observation by the analyst is the ideal method, but since this is usually not possible, it is necessary to fall back on indicators of physical productivity (for example, gross value of yield per acre in agriculture, the time taken to do a particular job compared with the norm estimated by management, the number of errors, or the scrap rate) or on the opinions of work supervisors.

Employers' opinions about the effectiveness of the program should be sought through questionnaires and interviews and, if possible, in the form of ratings of individual on-the-job performance. Employers can also provide factual information on the jobs and on wages and salaries of persons from different training backgrounds. Managers and supervisors can provide similar information and may be particularly useful in rating performance. The workers themselves can tell us about their age, trade, education and training, nature of current job, social background, and job and wage history since joining the labor force. (Examples of questionnaires for employers and employees are given in appendix F.)

For obtaining information on posttraining history, the most scientific method is undoubtedly the tracer project, which attempts to follow, often at regular intervals, a cohort from a particular training institution. Preferably, a number of parallel studies are carried out; this permits a comparison of the posttraining history of cohorts from different educational or training backgrounds. The problem with this method is that it is extremely expensive, particularly in a large country, and relies heavily on enumerators who have to demonstrate extraordinary qualities of ingenuity, honesty, and persistence if the studies are to be successful. Once members of the cohort are traced, a questionnaire can be administered to them. Alternatively, as a shortcut, an extended questionnaire can be administered to a sizable sample of the labor force, both employed and unemployed. The sample may be random or selective; in the latter case, care is taken to include certain categories—firms representing different sizes, locations, and sectors, firms on the books of the employment exchange, and so on. The purpose of the survey is to determine whether there is any measurable difference in labor market experience between persons from different educational and training backgrounds. The same sample of firms could be used to survey employers, managers, and supervisors, using the questionnaire as a basis but carrying out the survey by interview.

Since the ultimate aim of any project is to contribute to development, this is the most important dimension of outcome. Unfortunately, it is also the most difficult to measure. The usual practice is to use as a measure of benefit earnings—or, more precisely, the difference that the training makes to the lifetime earnings stream of those who undergo it. The difference is measured in relation either to what they could have expected without this training or to the expected lifetime earnings stream of a control group. This raises formidable problems of data. We need to know existing earnings patterns for workers of different ages, with and without such training, and the probability of their having jobs, and to guess how these patterns and probabilities will evolve over a period of thirty years or more. How far, for instance, will the increase in the number of trained people itself reduce differentials between the more and the less trained?

There are also conceptual problems. The use of earnings as a measure of benefit is derived from the marginal productivity theory of wages whereby a profit-maximizing employer will not expand his work force if an extra worker would add more to his costs than to his revenue. In a perfectly competitive labor market, the wage is equal to productivity at the margin; hence the use of wages or earnings to measure productivity or benefit. However, the profit-maximizing calculus does not apply to all employers. The public sector, for instance, has quite different objectives, and some adjustment of public sector wages may be necessary for our purposes. And if, as is often the case, labor markets are not perfectly competitive, the wage will be lower than marginal productivity even in the profit-maximizing sector.

Even if earnings broadly reflect productivity, there are important indirect effects that are not captured by this measure and that have to be taken into account.

First, on completion of their courses trainees may be placed in jobs that were held by others up to that point or may fill vacancies that would have been filled by others in the absence of the training scheme (the displacement effect). In the extreme case in which a trained worker merely bumps a less trained worker out of a job, taking over but not increasing the lifetime earnings stream associated with that job, the net social benefit from the training is zero.

Second, there may also be a replacement effect if the slot in the labor market vacated by the worker who joins a training scheme and subsequently moves into a higher occupational category is filled by another worker who would otherwise have remained unemployed. This should be counted as an extra benefit.

Third is the demonstration effect, whereby the skills acquired by trainees are diffused to others who have not undergone the training. This indirect effect can be quantitatively important, particularly in rural areas or among the urban self-employed.

Fourth, training may have important social effects that later yield economic benefits. For instance, training women may be important in reducing the fertility level.

Fifth, by breaking bottlenecks, training may have important dynamic effects not captured by the increase in earnings of the individual trainee. The resulting increase in output may open up employment opportunities for complementary workers who would otherwise be unemployed. And the creation of a pool of skilled labor may be an important factor in attracting more advanced technology to an economy, leading to a higher rate of growth in the future.

Enough has been said to suggest that earnings differentials are at best a partial and at worst a misleading measure of the impact on development of a training program. The list below summarizes the steps in the analysis of the impact on development of a training program. At each stage quantification should be taken as far as possible. But giving a qualitative answer to a question (indicating the direction in which quantities should be modified) is always better than pretending that the question does not exist.

1. Estimate year by year the lifetime earnings stream of an average trainee after completion of the training being evaluated, taking into account the probability of employment.
2. Estimate the expected lifetime earnings stream of an average trainee if he or she had not undergone this training, or of an average member of a control group similar in every other respect except exposure to this training.
3. Deduct (2) from (1) to derive the average differential in lifetime streams of earnings attributable to this program.
4. Adjust (3) downward if trainees are destined for an apparently overmanned part of the public sector, upward if for a part that is undermanned or overworked; upward if for an imperfect private sector labor market.
5. Adjust (3) upward if the replacement effect appears to be important.

6. Adjust (3) upward if the demonstration effect appears to be important.
7. Adjust (3) upward or downward to reflect net social effects.
8. Adjust (3) upward if the effect in breaking bottlenecks appears to be important.

Comparing Cost and Outcome

The simplest cost-outcome calculations are those that combine cost with not necessarily comparable outcomes in unit cost measures. For example, expenditure on plant and equipment for a proposed institution divided by the maximum number of students that can be enrolled in that institution at full capacity yields capital cost per student place. This allows comparisons among different projects (say, a polytechnical institution and a university) or different methods of building and equipping a given project. If capital costs are annualized as described above, capital and current costs can be combined as total cost per student or per graduate, which again allows comparisons among different projects or different ways of building and running a given project (for example, with more or fewer teachers per student). Cost per student raises no problems, being merely total cost over any time period divided by the number of students undergoing training in that period. Cost per graduate is slightly more complicated because estimates of the rates of dropout, repetition, and examination failure are needed.

Cost per graduate can be calculated using the equation

$$Cg = \frac{u \sum_{t}^{t-1} C + v \sum_{t}^{t-2} C + \cdots n \sum_{t}^{t-n} C + s \sum_{t}^{t-1} C + w \sum_{t}^{t-2} C + \cdots n \sum_{t}^{t-n} C}{g}$$

where Cg is cost per graduate in year t; C is average cost per student per year; g is number of graduates in year t; $u, v, \ldots, n$ are groups of graduates in year t classified according to number of years spent in training; and $s, w, \ldots, n$ are groups of dropouts and examination failures in year t classified according to number of years spent in training. As can be seen, use of the cost-per-graduate measure implies assigning a zero valuation to dropouts and examination failures, which may not be justified.

Where it is difficult to assign a money value to the outcome of a project, a cost-effectiveness measure is often used. If there is a scale of possible outcomes (as, say, in the case of examination scores), we can calculate the cost per unit of the appropriate measure. For instance, if there is a choice between three types of training institutions, each offering a similar one-year course but differing in the quality of intake and in final examination marks, the cost-effectiveness comparison can be made as in the example below.

	Total cost per student per year (dollars)	*Average score on entry (percent)*	*Final examination score (percent)*	*Effectiveness measure (change in score, in percentage points)*	*Cost – effectiveness measure*
Project A	600	40	60	20	30
Project B	375	50	65	15	25
Project C	350	60	70	10	35

Project B is the most cost effective in terms of least dollars spent per percentage point gained per student, even though project A is more effective and project C is less costly. The problem with comparisons of this kind is that they are based on the assumptions that percentage gains in scores (say, 40 to 60) are equally valuable all along the scale, and that other things are equal. From this point of view it would have been safer to compare projects with similar average scores on entry; but the decisionmaker still has to decide the marginal utility of a percentage gain in scores.

Where it is possible to attach money values to the outcome, some kind of cost-benefit calculation can be attempted. The most widely used approaches are to calculate the benefit-cost ratio or the net present value of the internal rate of return. Whichever approach is chosen, we start with the stream of costs (listed in the years that they occur) over the project's lifetime and the stream of benefits emanating from the project over the lifetimes of those who emerge from it (see "Cost" and "Outcome," above) and calculate the discounted present value of both streams. This must be done because resources have alternative uses. If, instead of being used for the project under consideration, $1 were invested elsewhere in the economy, it would yield an annual return at the social rate of discount and so in several years would have grown to much more than $1. By the same reasoning we would be willing to offer less than $1 now for the promise of $1 (at constant prices) some time in the future—how much less again depends on the social rate of discount. This present value of a future payment is known as the discounted present value and is given by the equation $PV = FV/(1 + r)^t$, where PV is present value in year 1 of the project, FV is future value, r is the social rate of discount, and t is the number of years hence. Table 3.2 shows the present value of a $1 payment made or received a given number of years in the future at a given social rate of discount. For instance, $1 to be paid thirteen years hence would be worth $0.29 today if the social rate of discount were 10 percent.

Once we have calculated, with the aid of such a present value table, the discounted present value of the stream of costs (C) and the discounted present value of the stream of benefits (B), the rest is easy. The benefit-cost ratio is simply B/C, and the net present value of the project is $B - C$. Thus, where for a particular project at a social discount rate of 10 percent B = $250,000 and C = $200,000, the benefit-cost ratio is 1.25 and the net present value is $50,000. On either count, since the benefit-cost ratio exceeds one and the net present value exceeds zero, it is worthwhile to proceed with the project.

Because such results are sensitive to the social rate of discount chosen, some analysts prefer to calculate an internal rate of return. This is defined as the discount rate at which the present value of the stream of benefits is exactly equal to the present value of the stream of costs. In equation form this is given by

$$\sum_{t=0}^{n} \frac{C_t}{(1+r)^t} = \sum_{t=0}^{n} \frac{B_t}{(1+r)^t}.$$

The most practical way of calculating the internal rate or return is by trial and error, calculating present values for successive assumptions about discount rate, which brings the two sides of the equation closer together.

Whenever possible, the results of cost-benefit calculations should be subjected to sensitivity analysis to test their sensitivity to changes in assumptions, for example, about the impact of the project on earnings differentials or, in the case of the benefit-cost ratio and net present value approaches, about the social rate of discount. Also, when the information available about cost and benefits is inadequate, a range of cost-benefit calculations can be made on plausible assumptions about likely maxi-

Table 3.2. ***Discounted Present Value of a $1 Future Payment*** t

	r (percent)					
t	3	5	8	10	12	15
1	0.9709	0.9524	0.9259	0.9091	0.8929	0.8696
2	0.9426	0.9070	0.8573	0.8264	0.7972	0.7561
3	0.9151	0.8638	0.7938	0.7513	0.7118	0.6575
4	0.8885	0.8227	0.7350	0.6830	0.6355	0.5718
5	0.8626	0.7835	0.6806	0.6209	0.5674	0.4972
6	0.8675	0.7462	0.6302	0.5645	0.5066	0.4323
7	0.8131	0.7107	0.5835	0.5132	0.4523	0.3759
8	0.7894	0.6768	0.5403	0.4665	0.4039	0.3269
9	0.7664	0.6446	0.5002	0.4241	0.3606	0.2843
10	0.7441	0.6139	0.4632	0.3855	0.3220	0.2472
11	0.7224	0.5847	0.4289	0.3505	0.2875	0.2149
12	0.7014	0.5568	0.3970	0.3186	0.2566	0.1869
13	0.6810	0.5305	0.3677	0.2897	0.2292	0.1625
14	0.6611	0.5010	0.3405	0.2633	0.2046	0.1413
15	0.6419	0.4810	0.3152	0.2394	0.1827	0.1229
16	0.6232	0.4581	0.2919	0.2176	0.1631	0.1069
17	0.6050	0.4363	0.2703	0.1978	0.1456	0.0929
18	0.5874	0.4155	0.2502	0.1799	0.1300	0.0808
19	0.5703	0.3957	0.2317	0.1635	0.1161	0.0703
20	0.5537	0.3769	0.2145	0.1486	0.1037	0.0611
21	0.5675	0.3569	0.1987	0.1351	0.0926	0.0531
22	0.5219	0.3418	0.1839	0.1228	0.0826	0.0462
23	0.5067	0.3256	0.1703	0.1117	0.0738	0.0402
24	0.4919	0.3101	0.1577	0.1015	0.0659	0.0349
25	0.4776	0.2953	0.1460	0.0923	0.0588	0.0304
26	0.4637	0.2812	0.1352	0.0839	0.0525	0.0264
27	0.4502	0.2678	0.1252	0.0763	0.0469	0.0230
28	0.4371	0.2551	0.1159	0.0693	0.0419	0.0200
29	0.4243	0.2429	0.1073	0.0630	0.0374	0.0174
30	0.4120	0.2314	0.0994	0.0573	0.0334	0.0151
31	0.4000	0.2204	0.0920	0.0521	0.0298	0.0131
32	0.3883	0.2099	0.0852	0.0474	0.0266	0.0114
33	0.3770	0.1999	0.0789	0.0431	0.0238	0.0099
34	0.3660	0.1904	0.0730	0.0391	0.0212	0.0086
35	0.3554	0.1813	0.0676	0.0356	0.0189	0.0075
40	0.3066	0.1420	0.0460	0.0221	0.0107	0.0037
60	0.1697	0.0535	0.0099	0.0033	0.0011	0.0002
80	0.0940	0.0202	0.0021	0.0005	0.0001	0.0000

Note t, number of years from present, r, social rate of return

mums or minimums in each case. Even where potential errors are not quantifiable, it is advisable to think about the direction of their possible influence on the results.

The data demands of the cost-benefit approach are so heavy, particularly on the outcome side, that it is often necessary to look for a shortcut such as the following formula.

$$\frac{B}{C} = \frac{Y_k - Y_{k-\Delta t}}{C}$$

where Y_k is the present value of the mean or median annual earnings of a sample of graduates from the training program at the time of the interview; $Y_{k-\Delta t}$ is the present value of the mean or median of their estimates of what they would have been earning if they had not undergone the particular training program; and C

is the present value of the stream of total costs of the program divided by the total number of graduates. Though expressed here as a benefit-cost ratio, this information could be used to calculate net present value or internal rate of return in the usual way.

Labor Market Indicators

Formal cost-outcome analyses are also supplemented by analyzing indicators of the state of the part of the labor market that is relevant to the training program. Ideally, changes in such indicators over the lifetime of the project should be inspected for evidence of impact, but if this is not possible, some inferences about the immediate impact and long-term effects of the project can be drawn from an analysis of current information alone.

Some information can be derived from questionnaires or interviews administ... to training institutions and graduates. For instance, what is the employment ... of graduates, say, one year after graduation? Or what proportion of those employed are working in fields similar to those for which they were trained?

More general labor market information—available from such sources as the personnel department of the civil service or of the public sector as a whole, official employment exchanges, private recruitment agencies, and newspaper advertisements—may also be useful for this purpose. An example of relevant data is the number of unfilled vacancies currently being advertised by employers for the occupational category of interest. However, data on vacancies must be treated with care. Vacancies are often filled internally rather than being advertised or reported to employment exchanges. Particularly within the public sector, the number of "vacancies" reported in interviews or questionnaires often represents posts it would be desirable to fill if funds were available, rather than posts for which active recruitment (backed by the power to pay) is in process.

It is a common practice to combine information about vacancies with information about unemployment of people in the same occupational category. Thus if the ratio of unemployed to vacancies is equal to one, this part of the labor market is judged to be in balance; if the ratio is below one (that is, the number of vacancies exceeds the number of unemployed), the employment climate is said to be favorable. However, even in industrialized countries with highly developed social security and employment exchange systems, the ratio of unemployed to vacancies has not been found to be a reliable indicator. In countries where few people register with the official employment exchanges and where many of those who do are not unemployed but are looking for something better, this ratio is likely to be even less helpful.

The number of expatriates employed in the relevant job category may a... be a useful indicator of present excess demand. Such information is usually held by the immigration department.

An indicator of the demand for the type of training offered is the number of applications in relation to places; the higher the ratio of applicants to places, the higher the probable payoff to graduates of this type of training.

Finally, the evaluators may look at the impact on earnings over time of the type of training in question. If relative earnings of this occupation vis à vis similar occupations are rising, this may signal an emerging shortage.

The Equity Objective

So far we have implicitly confined ourselves to the efficiency objective of the project. But we have also assumed a concern with equity. How do we incorporate this into our analysis?

Our first task is to establish the private profitability of the training. For this purpose we use the same internal rate of return equation as before, but with costs and benefits defined in private rather than social terms. Thus C is defined as the private cost (the cost to the individual) of the training in question and E as the private benefit (the excess of posttax annual earnings of a person trained at this level over one trained at the level immediately below, net of income forgone during training). If this return is judged to be adequate, we compare the proportion of students from underprivileged groups with a target quota, perhaps based on the proportion of the total population represented by such groups. This is expressed in indicator form as U_t / U_p, where U_t is the proportion of the trainees in this program from the underprivileged group and U_p is the proportion of the total population represented by the underprivileged group. The aim is to achieve as high a value as possible for U_t / U_p, and certainly a value of greater than one. What is possible may be partly determined by cost. For example, abolition of fees or the provision of free meals for underprivileged students may be ways of increasing equity in access (they would also increase private profitability by reducing the private cost to the individual trainee), but the cost to government of such measures may be unacceptably high.

Finally, when a government is seriously engaged in restructuring its strategy toward satisfaction of basic needs and alleviation of poverty, an equity-oriented training policy takes on an extra task: that of imparting the skills required to produce goods and services for the underprivileged. There is no simple indicator of the extent to which a particular training program is oriented toward the needs of the underprivileged rather than the purchasing power of the privileged. The evaluators can begin by determining whether the syllabus of the program (and the job definition from which it derives) is need oriented or market oriented. A basic needs profile of the whole economy, combining data on income distribution and on deficiencies in satisfaction of basic needs, can be useful for this purpose. From such a profile it should be possible to identify types of training that are most relevant to the needs of the poorest. This may not always be easy. For instance, the skills needed to build a public transport vehicle may not be easily distinguishable from those required for sports car manufacture. And the foreign exchange earned by luxury exports may be used to import goods needed for development and for mass consumption. In other cases, however, the distinction will be clear: for instance, training for rural preventive health care as against urban hospital-based curative medicine, or for low-cost housing design as against luxury high-rise buildings.

However, a further check is needed on the effectiveness of need-oriented training. What proportion of graduates from the program actually find jobs doing need-oriented work? Will their need-oriented skills be demanded in the labor market? Broader government strategy and socioeconomic progress are important here if the training program is to have the desired effect.

4

Summary Assessment and Procedures

The main purpose of this manual is to provide management with a diagnostic tool for identifying areas that require improvement. However, it can also be used to provide a profile of an institution so that different institutions within a training system can be compared with each other or with a "standard" institution.

The summary assessment (table 4.1) is meant to facilitate both uses by telescoping the data gathered through questionnaires and observations into a convenient numeric profile. The summary is organized according to indicators of internal and external efficiency. A six-point scale is used, with values ranging from 1 for satisfactory to 6 for unsatisfactory. (For a fuller explanation of the scale, see appendix A.) Since no ranking or weighting of the key factors exists, the summary cannot be made much more compact—it is not possible to arrive at a single measure of the efficiency and effectiveness of a training institution. Instead, the summary provides a multidimensional picture of an institution and permits comparisons between schools.

It should be noted that the overall assessment is not an arithmetic average of all the items under the key factor. The evaluators should weigh the individual responses and make an intuitive judgment of the overall assessment.

The guidelines in this section will be particularly useful for ministries or agencies which have not yet conducted regular evaluations of their technical schools or vocational training centers. We have tried to achieve an appropriate balance of detail and coverage so that the evaluations can be carried out with reasonable expenditures of time and manpower and still provide a systematic and comprehensive evaluation of the performance of any institution. The guidelines are not rules. We expect that in practice they will be modified to suit local circumstances and purposes. The scope of the evaluation and the depth of detail will be decided with an eye to the cost, the staff available, and the use to be made of the results. In the same way, the procedures for conducting the evaluation will vary according to circumstances.

The technical and vocational education system may include tens or hundreds of institutions. If the number is large, we recommend that as a first stage a sample of about ten, representative in terms of type, size, location, and so on, be chosen for initial evaluation. These initial evaluations serve several purposes. They quickly lead to the identification of any common problems or issues. They also allow the guidelines to be adapted and questionnaires and instruments to be modified to suit the agency's needs. If the agency is attempting evaluation on a significantly more detailed basis than in the past, these initial evaluations also provide a training

Table 4.1. *Summary Assessment*

EFFICIENCY OF OPERATIONS

Qualitative Indicators

Content and quality of courses						
Format and content of curricula and syllabuses	1	2	3	4	5	6
Quality of curricula and syllabuses	1	2	3	4	5	6
Review and revision of curricula and syllabuses	1	2	3	4	5	6
Teaching methods	1	2	3	4	5	6
Examinations and assessment	1	2	3	4	5	6
Overall assessment:	1	2	3	4	5	6
Students or trainees						
Entry and selection	1	2	3	4	5	6
Counseling and career guidance	1	2	3	4	5	6
Staff-student relationships	1	2	3	4	5	6
Overall assessment:	1	2	3	4	5	6
Staffing and staff development						
Staffing policies	1	2	3	4	5	6
Selection and qualifications	1	2	3	4	5	6
Staff development and training	1	2	3	4	5	6
Support staff	1	2	3	4	5	6
Overall assessment:	1	2	3	4	5	6
Physical resources						
Teaching facilities	1	2	3	4	5	6
Support facilities	1	2	3	4	5	6
Utilization of space	1	2	3	4	5	6
Provision of equipment	1	2	3	4	5	6
Equipment utilization	1	2	3	4	5	6
Consumable materials	1	2	3	4	5	6
Overall assessment:	1	2	3	4	5	6
Organization and management						
Objectives and plans	1	2	3	4	5	6
Organizational structure	1	2	3	4	5	6
Information system	1	2	3	4	5	6
Management style and effectiveness	1	2	3	4	5	6
Overall assessment:	1	2	3	4	5	6
Interrelations with industry						
Training and employment	1	2	3	4	5	6
Formal links and services	1	2	3	4	5	6
Industrial links of staff	1	2	3	4	5	6
Industrial environment	1	2	3	4	5	6
Overall assessment:	1	2	3	4	5	6

Table 4.1 *(continued)*

Quantitative Indicators	
Average time required to produce a graduate ÷ planned time	________
Output-input ratio	________
Cost per student per year[1]	________
Cost per graduate	________
Cost per student ÷ cost per student in general high school	________
EXTERNAL EFFICIENCY (OUTCOMES AND COSTS)[2]	
Employers' opinions on employability of graduates	
Preferred to other applicants	☐
Same as other applicants	☐
Less qualified than other applicants	☐
No opinion	☐
Teachers' opinions of graduates	
Well prepared for a good job	☐
Only adequately prepared for a job	☐
Not well prepared for a job	☐
Graduates' opinions on their ability to secure employment in their field of training	
With my training it is easy to get a job	☐
With my training it is not easy to get a job	☐
With my training it is very difficult to get a job	☐
Employment rate of graduates one year after graduation	________
Proportion of those employed working in the same or similar fields for which they were trained	________
Rate of return of the program (as calculated in chapter 3)	________

1. For short courses use cost per student per hour
2. Based on interviews with employers, teachers, and graduates, and on quantitative indicators (where data are available) on employment and earnings of graduates.

experience for the staff. The early evaluations should also be designed to help the evaluators arrive at a reasonable consensus of standards through exchange of information and by varying the membership of teams.

If the ministry or agency is establishing regular evaluation as part of its management review process, it is advisable to set up a small unit responsible for the administration of evaluation. However, it is normally better not to create a team of full-time evaluators, but instead to create a panel or pool of senior ministry staff that also includes active principals or directors and, if possible, representatives from industry or technical ministries.

Internal Efficiency

Each institution to be evaluated is given a set of questionnaires to be completed in advance (appendix D), together with a general note prepared by the agency explaining the purpose of the evaluation. If possible, preliminary briefing meetings are held with the directors of the institutions and their senior staff so that the questionnaires can be distributed and the purpose of the evaluation explained. The briefings should stress the importance of evaluation in planning and its value in identifying needs for resources. The full cooperation of staff should be obtained; subsequently, throughout the conduct of the evaluation, the team members must be on their guard to avoid acting as inspectors or inquisitors. Opportunities should be taken to exchange experiences and provide advice as well as to gather information.

The evaluation of the school or center takes place one to four weeks after the questionnaires are distributed. The evaluation team should include at least two persons: a technical and vocational educator whose experience and knowledge cover both developing and developed countries, and a person with a background in economics, particularly manpower and labor market economics. The evaluation of specialized training programs may require the addition of relevant specialists. The team will establish its own work pattern. We suggest the procedure outlined below, using the checklists in appendixes A and B as the main framework and the questionnaires and forms in appendixes D and E to provide the detailed structure for interviews and data collection.

DAY 1. An initial meeting with the principal or director and key senior staff is held. The data, reports, and completed questionnaires that were requested in advance (appendix D) are presented to the team, and problems or missing data are identified (about two hours).

The team then makes a brief tour of the institution to gain familiarity with the main facilities and layout (about one hour).

Next, the team reviews the completed questionnaires and clarifies any apparent anomalies or errors in the answers. It then proceeds, in discussion with the director or principal and the senior staff, to complete appendix questionnaires E.1 through E.7 (about three hours). These questionnaires are to be used as a basis for structured interviews and need not be rigidly followed. To preserve confidentiality, the team may wish to interview the director alone to complete questionnaire E.1, but senior staff should be brought in for the subsequent discussions, both to take advantage of their knowledge and to give them experience in the process of conducting evaluations.

DAY 2. The evaluation team proceeds to the detailed observation of teaching and training activities and use of equipment and facilities. Questionnaires E.8 through E.15 are filled out at this stage. If there is a relatively large number of laboratories or workshops, it is advisable to choose only a sample for detailed study. During this period in the classrooms, laboratories, and workshops the evaluation team should review critically the content and treatment of the courses or subjects (about four hours).

The evaluation team may conduct its interviews of teaching staff and trainees while carrying out the observations in the classrooms and workshops. If, however, only a relatively small sample of the activities is covered, it would be better to arrange for more broadly based interviews with a group of six to eight staff members and a like group of trainees, using questionnaires E.14 and E.15 as the framework (about two hours).

At this stage the evaluation team should be able to complete its assessments of the key factors in checklists A and B, covering the qualitative and quantitative aspects of internal efficiency (about three hours).

A third day may be required if a very large institution (2,000 or more training places and a wide range of training programs) is being evaluated.

The evaluation team concludes its visit to the institution with a brief presentation to the senior staff of the main findings.

It will be clear from the above that the evaluation exercise is significantly more searching and revealing than the normal institutional visit, and only with practice will the team acquire the skills necessary to carry out the interviews and assemble the data. Since the team is required to make value judgments about quality of training, it is vital that the members' experience and background give them adequate status. Even so, they may find it difficult to make judgments about the quality of teaching in subjects that are outside their own specializations. In that case it would be advisable to form slightly larger teams covering a representative range of the technical specializations offered in the institution.

External Efficiency

The evaluation of external efficiency involves the collection of data from employers and graduates of the training programs, as set out in chapter 3. Arrangements for the interviews should be made beforehand, either by the local representatives of the responsible agency or by the director of the institution. It is useful for a staff member of the institution being evaluated (preferably the guidance counselor or the person in charge of liaison with industry) to be present.

THE SAMPLE. Only a sample of firms should be singled out for interviews, that is, six to eight in the city where centers or schools are being evaluated. The firms should be selected on the basis of two criteria: high probability of employing graduates from the institutions being evaluated, and size (large, medium, and small firms should be represented). The information is collected in interviews, initially with the personnel officer, then with foremen and with graduates of the school or recent trainees. These interviews, based on the questionnaires in appendix F, will usually require not more than one to two hours in each firm. The limited purpose of the evaluation should be made clear from the outset, and firms will usually give full cooperation.

THE QUESTIONNAIRE. As discussed in chapter 3, interviews and questionnaires, although costly and time-consuming, are extremely helpful in assessing the effectiveness of the training from the points of view of the trainee and the employer.

In planning a questionnaire survey, the first issue to be resolved is what groups to interview. At a minimum, graduates, dropouts, and supervisors of the graduates should be interviewed. However, if time and resources allow, teachers, directors of programs, and other employers could also be included.

The second issue is what areas to cover. In general, the questionnaires should include the characteristics of the respondent, the effects of training on employment and earnings, assessment of the training program, and assessment of the graduates.

For inquiry through questionnaires to succeed, efficient management and the cooperation of everyone concerned are required. In addition, attention must be given to the following considerations.

Drafting the questions requires great care. It demands a good knowledge of the language and culture of the interviewees, as well as some technical knowledge of the skill or occupation of interest. Whenever possible, questions should not be open-ended, since this invites a wide range of subjective replies and comments that are not comparable. Specific alternative replies to each question should therefore be offered to respondents. This also permits easy coding and tabulation of replies (see sample questionnaires in appendix F).

Better-educated respondents may be able to complete a well-made questionnaire by themselves, and budget limits may necessitate this shortcut. But in general, personal interviewing, although costly, yields the most complete and useful responses, since the interviewer is able to clear up misunderstandings and ask follow-up questions. At the very least, personal delivery and collection of the questionnaires, despite the expense, is preferable to expecting people to reply to an impersonal survey by mail.

Under ideal circumstances a significant statistical sample of former trainees should be drawn. When availability of funds determines the size and structure of the sample and the questionnaire or interview procedure, the only option may be to restrict the interviews to graduates at their place of work. This precludes interviewing unemployed trainees.

Training and instructions for interviewers must be careful and detailed to ensure uniform interpretation of the questions and the smooth evolution of the interview.

Finally the answers have to be coded, tabulated, and cross-tabulated so that the evaluator can draw the pertinent conclusions. Sufficient resources, time, and people must be allocated to do this routine but essential chore properly.

Similar answers to the same question, but from different viewpoints, reinforce conclusions. Conversely, answers that differ from one group to another may cast doubt on the validity of a single conclusion, and further evidence may be required. When graduates of the school are being appraised, a supervisor may be asked to rate graduates compared with nongraduates and a graduate may be asked to rate fellow graduates compared with other workers in his group. Similarly the graduate's assessment of the quality of teachers should be supplemented by the opinions of administrators. Because of the variety of institutional setups and the different characteristics of particular national and cultural environments, it is impossible to spell out beforehand the exact questions to be asked and the manner in which they are posed. But some basic issues are common to all evaluations and must be covered in questionnaires and interviews.

APPENDIXES

A

Checklist. Efficiency of Operations: Qualitative Evaluation

Note: Refer to completed appendixes D and E.

This checklist covers the key factors to be assessed by the evaluation team. For each key factor there is a set of questions that can be answered easily by checking the appropriate box; space for supplementary comments or explanations; and a block for overall assessment of performance for the key factor. The aim is not to arrive at an overall score based on adding up points for the individual factors. It is to compile a profile of the satisfactory and unsatisfactory aspects of performance for each factor.

The key factors cannot be evaluated without collecting and understanding a considerable amount of data and information and observing the school's operations. Forms and questionnaires for collecting the information and for recording observations are given in appendixes D and E.

Ratings used for the six-point scale are as follows:

Satisfactory ↑	1	Completely satisfactory
	2	Generally satisfactory; room for some improvement
	3	Acceptable; needs improvement in limited aspects, but not major or urgent
	4	Less than acceptable; needs improvement on fairly wide scale, but not major or urgent
	5	Generally unsatisfactory; needs attention
↓ Unsatisfactory	6	Completely unsatisfactory; needs urgent attention and improvement

In general, ratings of 4, 5, and 6 indicate a need for attention and improvement—in the case of 6, an urgent and critical need.

The evaluator should weigh the individual responses and use intuitive judgment to arrive at the overall assessment.

In all checklists, Y stands for yes and N for no.

Content and Quality of Courses

Format and Content of Curricula and Syllabuses

a. How satisfactorily are the course objectives expressed and related to training needs? [1] [2] [3] [4] [5] [6]

b. Is there a clear and detailed description of:
   - Time allocation for subjects? [Y] [N]
   - Time allocation for activities? [Y] [N]
   - Subject content? [Y] [N]
   - Learning objectives? [Y] [N]
   - Performance measures? [Y] [N]

c. How well does the content of curricula and syllabuses satisfy course objectives? [1] [2] [3] [4] [5] [6]

d. If the answer to (c) is 4, 5, or 6, indicate the main deficiencies:
   - Too much theory ☐
   - Does not provide appropriate level of practical training ☐
   - Too little theory ☐
   - Curricula content not relevant to industries' needs ☐
   - Time allocation not adequate for content ☐
   - Other (list) ☐

e. Does the course include project work? [Y] [N]

Comments:

Overall assessment: [1] [2] [3] [4] [5] [6]

Quality of Curricula and Syllabuses

a. In relation to the course objectives,
   How well are major practical skills covered? [1] [2] [3] [4] [5] [6]
   How well are relevant theoretical areas covered? [1] [2] [3] [4] [5] [6]
   How satisfactorily are theoretical and practical areas coordinated? [1] [2] [3] [4] [5] [6]

b. How satisfactorily are different subjects in the courses coordinated? [1] [2] [3] [4] [5] [6]

c. How satisfactorily does the overall treatment correspond to current and foreseeable industrial needs? [1] [2] [3] [4] [5] [6]

d. If the responses above include 4, 5, or 6, indicate the main deficiencies.

Comments:

Overall assessment: [1] [2] [3] [4] [5] [6]

Review and Revision of Curricula and Syllabuses

a. Are curricula and syllabuses reviewed and revised regularly? [Y] [N]

b. Is industry involved in such reviews? [Y] [N]

c. How many years has it been since the last review? [<1] [1] [2] [3] [>3]

d. Is there an arrangement for feedback from graduates on course content? [Y] [N]

Comments:

Overall assessment: [1] [2] [3] [4] [5] [6]

Teaching Methods

a. On the basis of observation, rate—
The use of teaching and training aids 1 2 3 4 5 6
The supply of notes or materials to students 1 2 3 4 5 6
The quality of teaching materials 1 2 3 4 5 6
The quality of students' work 1 2 3 4 5 6

b. Taking practical work alone,
How satisfactory is the quality of students' work? 1 2 3 4 5 6
Do the range and quantity of work appear satisfactory? 1 2 3 4 5 6

c. When observed,
What was the actual size of the practical work group? ________
Were the trainees being satisfactorily supervised? 1 2 3 4 5 6
Approximately what percentage of students in the laboratory or workshop actually were performing practical work? ________

d. Does there appear to be satisfactory coordination between
Theory and practice? Y N
Subjects? Y N

Comments:

Overall assessment: 1 2 3 4 5 6

Examinations and Assessment

a. Is there a clear description of the examination scheme? Y N

b. How well does the examination scheme relate to course objectives? 1 2 3 4 5 6

c. How satisfactory are the arrangements for determining passing or failure? 1 2 3 4 5 6

d. How satisfactory are the arrangements for continuous assessment? 1 2 3 4 5 6

Comments:

Overall assessment: 1 2 3 4 5 6

Students and Trainees

Entry and Selection

a. Are entry qualifications satisfactory in relation to course objectives? [Y] [N]

b. Is the selection process appropriate in relation to objectives? [Y] [N]

c. How satisfactory does the quality of students seem in relation to course objectives? [1] [2] [3] [4] [5] [6]

Comments:

Overall assessment: [1] [2] [3] [4] [5] [6]

Counseling and Career Guidance

a. Is there a satisfactory scheme for advising potential students and trainees about courses and careers? [Y] [N]

b. Are there satisfactory arrangements for counseling students on the progress of their training? [Y] [N]

c. Is there a satisfactory scheme for assisting students to find employment? [Y] [N]

d. Is there a formal scheme for follow-up of students after graduation? [Y] [N]

Comments:

Overall assessment: [1] [2] [3] [4] [5] [6]

Staff-Student Relationships

a. Do staff-student relationships appear satisfactory? [Y] [N]
b. Do students and trainees participate in meetings with staff on training? [Y] [N]

Comments: (refer also to interviews with staff and students):

Overall assessment: [1] [2] [3] [4] [5] [6]

Staffing and Staff Development

Staffing Policies

a. What is the weekly teaching duty, in hours? ________________
b. Are teaching duty hours satisfactory, bearing in mind such factors as the time required for preparation? [Y] [N]
c. Are salaries for teachers equivalent to salaries in industry for comparable qualifications? [Y] [N]
d. Are other conditions equivalent to those in industry? [Y] [N]
e. Is there a satisfactory scheme for grading staff in relation to experience, qualifications, and responsibilities? [Y] [N]

Comments:

Overall assessment: [1] [2] [3] [4] [5] [6]

Selection and Qualifications

a. In relation to course objectives, are the qualifications and experience required for staff appointment—
   Satisfactory? [Y] [N]
   Relevant? [Y] [N]
b. How experienced and qualified are the staff with respect to—
   Theoretical training? [1] [2] [3] [4] [5] [6]
   Practical skills training? [1] [2] [3] [4] [5] [6]
   Training in teaching? [1] [2] [3] [4] [5] [6]
   Industrial experience? [1] [2] [3] [4] [5] [6]
c. Are the conditions for promotion satisfactory? [Y] [N]
d. Is there a satisfactory number of staff in post? [Y] [N]
e. Is the turnover reasonable? [Y] [N]

Comments:

Overall assessment: [1] [2] [3] [4] [5] [6]

Staff Development and Training

a. Is there a satisfactory staff development plan for the institution? [Y] [N]

b. Are there satisfactory arrangements for pre-service training in—

Technical competence? [Y] [N]

Teaching methods? [Y] [N]

Management? [Y] [N]

c. Are there satisfactory arrangements for in-service training? [Y] [N]

Comments:

Overall assessment: [1] [2] [3] [4] [5] [6]

Support Staff

a. Are the following staff levels satisfactory?

Technical support staff for laboratories and workshops [Y] [N]

Administrative staff [Y] [N]

Specialist staff, for example, librarians [Y] [N]

Storekeepers [Y] [N]

b. Are there satisfactory numbers of staff actually in the following posts?

Technical support staff for laboratories and workshops [Y] [N]

Administrative staff [Y] [N]

Specialist staff, for example, librarians [Y] [N]

Storekeepers [Y] [N]

c. Are salary levels for support personnel adequate to attract staff? [Y] [N]

d. How qualified and experienced are the support staff? [1] [2] [3] [4] [5] [6]

Comments:

Overall assessment: [1] [2] [3] [4] [5] [6]

Physical Resources

Teaching Facilities

a. Are the amounts and range of the following satisfactory?

Classrooms	Y N
Specialist laboratories	Y N
Specialist workshops	Y N
Preparation rooms and stores	Y N

b. Is the physical layout and interrelationship satisfactory? Y N

c. Are services adequate? Y N

d. Are buildings and services maintained in a satisfactory state? Y N

e. Are safety features satisfactory? Y N

f. Are lighting and ventilation satisfactory? Y N

Comments:

Overall assessment: 1 2 3 4 5 6

Support Facilities

a. Are the areas and facilities for the following satisfactory?

Library	Y N
Administration	Y N
Central services	Y N
Communal areas	Y N

b. Is student housing adequate? Y N

c. Is staff housing adequate? Y N

Comments:

Overall assessment. 1 2 3 4 5 6

Utilization of Space (see appendix B, "Facilities: Schedule and Utilization")

a. How satisfactory is the utilization of the following?

Classrooms	1 2 3 4 5 6
Laboratories	1 2 3 4 5 6
Workshops	1 2 3 4 5 6
Libraries	1 2 3 4 5 6
Other	1 2 3 4 5 6

Comments:

Overall assessment: 1 2 3 4 5 6

Provision of Equipment

a. How comprehensive is the range of laboratory and workshop equipment?	1 2 3 4 5 6
b. How relevant is the equipment to course needs?	1 2 3 4 5 6
c. How satisfactory is the provision of equipment for individual practical work?	1 2 3 4 5 6
d. How satisfactory is the equipment in terms of being up to date?	1 2 3 4 5 6
e. How adequate is the provision and availability of the following support equipment?	
Overhead projectors	1 2 3 4 5 6
Screens	1 2 3 4 5 6
Reprographic equipment	1 2 3 4 5 6
Other audiovisual aids	1 2 3 4 5 6
f. How satisfactory is the program for replacement of equipment?	1 2 3 4 5 6

Comments:

Overall assessment: 1 2 3 4 5 6

Equipment Utilization

a. How satisfactory is the utilization of equipment? [1] [2] [3] [4] [5] [6]
b. What are the main reasons for equipment not being in regular use?
   - Lack of materials [Y] [N]
   - Not relevant to course needs [Y] [N]
   - Obsolete [Y] [N]
   - No instruction manuals [Y] [N]
   - Broken down; lack of spares [Y] [N]
c. How satisfactory is the maintenance program? [1] [2] [3] [4] [5] [6]
d. How satisfactory is the stock of spare parts? [1] [2] [3] [4] [5] [6]

Comments:

Overall assessment: [1] [2] [3] [4] [5] [6]

Consumable Materials

a. How satisfactory are stocks of consumable materials? [1] [2] [3] [4] [5] [6]
b. How satisfactory is the stores and distribution system? [1] [2] [3] [4] [5] [6]
c. Are there satisfactory provisions in annual budgets for replacing materials? [Y] [N]
d. How satisfactory are the availability of materials and their use in the training? [1] [2] [3] [4] [5] [6]

Comments:

Overall assessment: [1] [2] [3] [4] [5] [6]

Organization and Management

Objectives and Plans

a. How clearly are institutional objectives defined?	1 2 3 4 5 6
b. To what extent is there an institutional development plan covering	
Course development?	1 2 3 4 5 6
Enrollments?	1 2 3 4 5 6
Staffing?	1 2 3 4 5 6
Physical resources?	1 2 3 4 5 6
Capital and recurrent costs?	1 2 3 4 5 6
c. Are plans reviewed regularly and implementation monitored?	Y N
d. How effective is the system for monitoring implementation of development plans?	1 2 3 4 5 6

Comments:

Overall assessment: 1 2 3 4 5 6

Organizational Structure

a. How clear and well defined is the organizational structure?	1 2 3 4 5 6
b. Does the structure match the training functions?	1 2 3 4 5 6
c. Is there a local governing body?	Y N
d. If yes, is industry represented?	Y N

Comments:

Overall assessment: 1 2 3 4 5 6

Information System

a. How adequate and readily available is information on
   Enrollments? 1 2 3 4 5 6
   Student and trainee performance? 1 2 3 4 5 6
   Utilization of resources? 1 2 3 4 5 6
   Expenditure and income? 1 2 3 4 5 6
b. Is such information used in decisionmaking? Y N

Comments:

Overall assessment: 1 2 3 4 5 6

Management Style and Effectiveness

a. How well do the staff exhibit a sense of purpose and understanding of objectives? 1 2 3 4 5 6
b. How well do students and trainees exhibit a sense of purpose and understanding of objectives? 1 2 3 4 5 6
c. What is the state of discipline in the institution? 1 2 3 4 5 6
d. Overall, how well managed does the institution appear to be? 1 2 3 4 5 6

Comments:

Overall assessment. 1 2 3 4 5 6

Interrelations with Industry

Training and Employment

a. Approximately what percentage of trainees obtains jobs in their fields within six months after finishing training?

<5☐ 6–20☐ 21–40☐ 41–60☐ 61–80☐ >80☐

b. What percentage of trainees on full-time or block-release programs is sponsored by industry?

<5☐ 6–20☐ 21–40☐ 41–60☐ 61–80☐ >80☐

c. Does industry have employees who have had in-plant training take skills tests conducted by the institution? [Y] [N]

d. How effective is the organization or service provided by the institution to help trainees obtain employment after they finish training? [1] [2] [3] [4] [5] [6]

   Is there a full-time placement officer? [Y] [N]

   Is there a part-time placement officer? [Y] [N]

   Does industry regularly visit the institution to recruit workers? [Y] [N]

e. How effective is the institution's follow-up of trainees to obtain feedback information on training and employment? [1] [2] [3] [4] [5] [6]

Comments:

Overall assessment: [1] [2] [3] [4] [5] [6]

Formal Links and Services

a. How effective is the participation of industry representatives in the following activities?

Governing body of the institution	1 2 3 4 5 6
Advisory committee	1 2 3 4 5 6
Training programs and curricula	1 2 3 4 5 6
Examinations or tests	1 2 3 4 5 6

b. Does industry participate in joint publicity or similar supporting activities, for example, the award of prizes to trainees? Y N

c. How effectively does the institution provide the following services to industry?

Technical advice	1 2 3 4 5 6
Technical services (measurements, testing)	1 2 3 4 5 6
Production assistance	1 2 3 4 5 6

Comments:

Overall assessment: 1 2 3 4 5 6

Industrial Links of Staff

a. How satisfactory is the extent and relevance of the teaching staff's experience in industry? 1 2 3 4 5 6

b. Is there a regular arrangement for staff to be attached to industry for experience? Y N

c. Does the institution make effective use of part-time staff from industry? Y N

d. Are there staff members who are responsible for liaison with industry? Y N

e. Do staff obtain any significant income from industry? Y N

Comments:

Overall assessment: 1 2 3 4 5 6

Industrial Environment

a. How effective is the institution in creating an environment similar to that in industry with respect to

General work environment?	1 2 3 4 5 6
Discipline?	1 2 3 4 5 6
Timekeeping?	1 2 3 4 5 6
Safety procedures?	1 2 3 4 5 6

b. Does the institution engage in production, construction, or repair activities? Y N

c. If yes,

Are students effectively involved?	Y N
Are staff effectively involved?	Y N
How effectively does the activity contribute to the content and standard of training?	1 2 3 4 5 6
How effectively does the activity contribute to income generation for the center?	1 2 3 4 5 6

Comments:

Overall assessment: 1 2 3 4 5 6

B

Checklist. Efficiency of Operations: Quantitative Evaluation

Note: Refer to completed appendixes D and E.

Student Flow Rates

a. Admission rate ____________
b. Dropout rate ____________
c. Repetition rate ____________
d. Pass/fail rate ____________

Efficiency Indexes

a. Average time required to produce a graduate ____________
b. Output-input ratio ____________

Staff Load

a. Student-staff ratio ____________
b. Average class size ____________
c. Average teacher workload (hours a week) ____________

Facilities: Schedules and Utilization

a. Average workspace per student (in square meters)
   Classrooms ____________
   Laboratories ____________
   Workshops ____________
b. Support space (capacity in square meters per student)
   Library ____________
   Communal space ____________
   Living accommodations ____________
c. Space utilization (list for selected categories of space and for specialized workshops and laboratories, for example, machine shop, welding workshop)

Costs

a. Total and unit costs

Total cost	________
Number of students	________
Number of graduates	________
Cost per student per year	________
Cost per graduate	________

b. Cost analysis (show each category as percentage of total costs)

Staff salaries	________
Consumable materials	________
Maintenance	________
Other (break down if exceeds 10 percent)	________

C

Checklist. The Central Training System

Policies, Planning, and Development

a. Is there a central policy for vocational training and education? [Y] [N]

b. Is there satisfactory coordination between the various training subsystems? [Y] [N]

c. Is there a current national development plan for training? [Y] [N]

d. If yes does the plan adequately cover:

- Enrollments? [Y] [N]
- Training programs? [Y] [N]
- Staffing? [Y] [N]
- Physical resources? [Y] [N]
- Capital costs? [Y] [N]
- Recurrent costs? [Y] [N]

Comments:

Overall assessment: [1] [2] [3] [4] [5] [6]

Central and Regional Control

Control of Training Programs and Courses

a. Is the distribution of courses and enrollments centrally controlled? [Y] [N]
b. Is there a national training system? [Y] [N]
c. If yes, what percentage of trainees takes national standardized tests? [Y] [N]
d. Is there central control of
   Curricula and syllabuses? [Y] [N]
   Content of training materials? [Y] [N]
   Supply of training materials? [Y] [N]
   Examinations? [Y] [N]
e. Is there a system of national inspectors or advisers? [Y] [N]
f. Is quality of training monitored by central staff? [Y] [N]

Comments

Overall assessment: [1] [2] [3] [4] [5] [6]

Control of Staffing

a. Are staff salaries fixed nationally? [Y] [N]
b. Are staff levels fixed nationally? [Y] [N]
c. Are salaries comparable with those for other government work? [Y] [N]
d. Are salaries comparable with those in the private sector? [Y] [N]
e. Is there a national staff development and training plan? [Y] [N]
f. Is there adequate provision for the following types of in-service training? [Y] [N]
   Technical training [Y] [N]
   Teacher training [Y] [N]
   Management training [Y] [N]
g. Is staff performance monitored? [Y] [N]

Comments:

Overall assessment: [1] [2] [3] [4] [5] [6]

Physical Resources

a. Is there a national building development plan that is related to academic and training plans? Y N
b. Are building plans based on standard unit areas per trainee place? Y N
c. If yes, are the standards comparable to international standards? Y N
d. Is utilization of buildings monitored? Y N
e. Have standards been established for provision of
   Equipment? Y N
   Materials? Y N
f. Is equipment utilization monitored? Y N

Comments:

Overall assessment: 1 2 3 4 5 6

Finances

a. What are the sources of funds?
   Government (if so, check appropriate boxes below) ☐
      Direct budget allocation ☐
      Earmarked taxes ☐
      Combination of these two ☐
   Industry ☐
   Fees ☐
b. Are medium or long-term forecasts of availability of funds made? Y N
c. Are costs analyzed? Y N
d. Are costs and financial data used for management purposes? Y N

Comments:

Overall assessment: 1 2 3 4 5 6

Management Organization

a. Does the management organization provide for systematic and effective coverage of responsibilities for
   - Planning? [Y] [N]
   - Implementation? [Y] [N]
   - Follow-up? [Y] [N]

b. Does the management staff appear adequate with respect to
   - Numbers? [Y] [N]
   - Training qualifications and experience? [Y] [N]
   - Management qualifications, and experience? [Y] [N]

c. Is up-to-date information available on
   - Enrollments? [Y] [N]
   - Staffing? [Y] [N]
   - Examination results? [Y] [N]
   - Costs? [Y] [N]

d. Is the information listed in (c) used for management purposes? [Y] [N]

Comments:

Overall assessment: [1] [2] [3] [4] [5] [6]

Background Information and Questionnaires

Copies of the reports, documents, and statements listed below should be obtained before the evaluation.

- Organization charts of the central ministry and regional office showing relevant key posts and main responsibilities
- Copies or extracts of relevant government policy statements, decrees, development programs, and annual reports
- Regulations covering apprenticeship, training incentives, and so forth.

The following questionnaires should be completed.

- C.1. Annual Enrollments and Output, Technical and Vocational Education and Training Systems
- C.2. Central Agency Expenditures, by Program
- C.3. Sources and Uses of Funds for Training
- C.4. Training Services of the Central Agency

C.1. *Annual Enrollments and Output, Vocational Training System*

Instructions: Complete for past three years.

System	*19__/__*			*19__/__*			*19__/__*		
	Number of schools or centers	*Enroll-ment*	*Output*	*Number of schools or centers*	*Enroll-ment*	*Output*	*Number of schools or centers*	*Enroll-ment*	*Output*
Secondary vocational and technical schools									
Public (government)									
Industrial and technical									
Other vocational									
Private									
Industrial and technical									
Other vocational									
Vocational training									
Public (government)									
Industrial vocational training centers									
Other vocational training centers									
Privately financed or industry-sponsored									
Industrial vocational training									
Other vocational training									

C.2. *Central Agency Expenditures, by Program*

Instructions: Record expenditures, in local currency, for each category for the past two years. Separate tables are to be completed for each central agency (ministry of education, ministry of labor or manpower, central training authority).

	19_/_	19_/_
General administration		
Manpower planning		
Training services		
Curriculum development		
Production of teaching materials		
Skills testing		
Inspection		
Advisory services		
Staff development		
Research		
Employment services		
Placement		
Follow-up		
Total		

C.3. *Sources and Uses of Funds for Training*

A. Expenditures on vocational and technical training
Instructions: Give expenditures, in local currency, for past two years.

	19_/_	19_/_
Ministry of education		
a. Total expenditure on vocational and technical education[1]		
b. Expenditure on industrial vocational education[2]		
Ministry of labor or manpower, or central training agency		
a. Total expenditure on vocational training[1]		
b. Expenditure on industrial vocational training[2]		

B. Sources of funds
Instructions: Give data in local currency.

	Regular budget	*Earmarked taxes or levy*	*Income from fees*	*Development funds*	*Other*
Ministry of education					
Ministry of labor or manpower, or central training agency					

1 Includes industrial, agricultural, and home economics

2 Included in (a)

C.4. Training Services of the Central Agency

Evaluation team: Write in year (most recent full fiscal year).
Instructions: Please provide figures or check appropriate box.

1. Is there a national training advisory service that assists employers to identify training needs and to arrange training? __________
2. If yes,
   a. How many training officers are there? __________
   b. How many firms were assisted in 198_? __________
   c. How many workers were upgraded in 198_? __________
      Of these, how many were
         Apprentices (craft, technical, and engineering)? __________
         Adult workers? __________
         Supervisors and foremen? __________
   d. How much money, in local currency, was budgeted by the government for the service in 198_? __________
   e. How much money, in local currency, did employers contribute to the service in 198_? __________
3. Is training arranged for training officers and managers of firms? [Y] [N]
4. If yes,
   a. How many training officers and managers were trained in 198_? __________
   b. Were the courses for training officers and managers given by staff of the central training office? [Y] [N]
   c. If no, were the courses subcontracted to a management training unit of an institution for higher education? [Y] [N]
   d. How much money, in local currency, was budgeted for this service in 198_? __________
5. Is there an inspection service to supervise training centers and staff? [Y] [N]

6. If yes,
   a. How many supervisors are employed? ____________
   b. How many training centers were inspected in 198_? ____________
   c. How long does an inspection normally take? ____________
   b. Does the inspection include
      A review of the course program and lesson plans? [Y] [N]
      An assessment of the training methods employed? [Y] [N]
      An inspection of the training equipment, materials, and aids in use? [Y] [N]
      A review of text schemes and the quality of trainees' work? [Y] [N]
      An assessment of the upkeep of workshops and offices? [Y] [N]
      An evaluation of the quality of instruction and of training center management? [Y] [N]
      A meeting with the advisory body or other group of employers regarding the relevance to local needs of the training center and its programs? [Y] [N]
      A review of the budget and accounting system? [Y] [N]
   e. Are inspection reports available? [Y] [N]
      If yes, please provide evaluation team with examples.
   f. How much money is budgeted for inspection? ____________
7. Are there arrangements for evaluating the external efficiency of training programs? [Y] [N]
8. If yes,
   a. Is there a tracer and follow-up system for former trainees? [Y] [N]
   b. If yes,
      For how many years after graduation are trainees followed up? ____________
      What is the frequency of follow-up? ____________
      What is the annual budget for follow-up? ____________
   c. Are employers interviewed to ascertain their opinion of former trainees' performance? [Y] [N]
   d. If yes, are employers questioned on
      Skill levels of former trainees? [Y] [N]
      Relevance of the training? [Y] [N]
      Attitudes of former trainees? [Y] [N]

D

Efficiency of Operations: Background Information

The information requested in this appendix is to be collected in advance by the director and senior staff of the institution to be evaluated. If the evaluation team is multinational and translations will be needed, ask the responsible person to provide translations or translated summaries of the information, and specify the languages.

The responsible person should place a check mark in each box in the list below to show that the requested information has been gathered or the questionnaires completed. The questionnaires are intended as guides and may be modified by the team to fit the particular circumstances.

1. Basic information (D.1) ☐
2. Course curricula, syllabuses, and examinations
   a. Curricula of main courses showing time allocations by subject for each year or semester ☐
   b. Specimen syllabuses (provide examples for typical courses to show the format) ☐
   c. Examination regulations ☐
3. Students
   a. Entrance qualifications ☐
   b. Enrollment and output, by course (D.2) ☐
   c. Recent report on follow-up of graduates, if available ☐
4. Staff
   a. Curriculum vitae of director ☐
   b. Instructors' qualifications and experience (D.3) ☐
   c. Support staff (D.4) ☐
5. Physical resources
   a. Schedule for facilities (D.5) ☐
   b. Utilization of space (D.6) ☐

6. Management
   a. The institution's organization chart, showing main departments and units, key posts such as heads of departments, and advisory committees. Include brief details of constitution and terms of reference for staff. ☐
   b. The latest annual report of the institution ☐
   c. The development plan, if any, for the institution ☐
7. Costs
   a. Annual operating costs (D.7) ☐
   b. Capital expenditure (D 8) ☐

D.1. Basic Information

Name of center or school ______________________________

Address ______________________________

Name of director or head teacher ______________________________

Date institution began operations ______________________________

Main courses or specializations (include brief statement of main training activities):

Total number of students enrolled ____________

Total number of teaching or training staff ____________

Total number of other staff ____________

Does the center or school operate on a single or a double shift? ____________

Approximately what percentage of total training hours is alloted to

- Regular technical school courses ____________
- Courses for unemployed youth no longer in school ____________
- Courses for apprentices ____________
- Courses to upgrade employed workers ____________
- Supervisory training ____________
- Management training ____________
- Instructor training ____________
- Other ____________

Name and position of person completing questionnaire ______________________________

____

Date ______________________________

Name of school or center ____________

D.2. *Enrollment and Output, by Course or Specialization, 19__/__*

Instructions: Complete a separate table for each of the past three years. This form is suitable for courses lasting one to four years. If courses are shorter than one year, use only the first column. See specific notes below.

		Enrollment by course or specialization					
Course or specialization[1]	*Nature or length of course*[2]	*First year*	*Second year*	*Third year*	*Fourth year*	*Total*	*Output (number of graduates)*[3]
All courses							

1. List specializations or courses in which training is offered and students are enrolled (for example, mechanical engineering, auto mechanics, welding, electrical installation).
2. Enter separately for each major program or course. Indicate length in weeks or total hours per course or year; show whether course is full time or part time.
3. Number who completed course successfully.

Name of school or center ______________________________

D.3. *Instructors' Qualifications and Experience*

	Number of instructors				Average value for each specialization or trade[1]							
	Part-time											
Specialization[2]	Number	FTE[3]	Full-time	Total FTE	Years of general education	Years of technical education or vocational training	Years of technical teacher training	Years of teaching experience	Length of training overseas	Upgrading in-service training	Years of industrial experience	Relative salary[4]

1. Show the average value for each full-time equivalent (FTE) instructor for each specialization.
2. List specializations according to the main departmental or unit groupings, for example, mechanical, automotive, electrical, building construction, general science, and mathematics.
3. The number of full-time-equivalent teachers is obtained by dividing the total weekly hours (periods) taught by part-time teachers by the normal weekly teaching load of a full-time teacher.
4. Average salary divided by salary of industrial worker with equivalent qualifications.

Name of school or center ____________________

D.4. *Support Staff*

Instructions: Complete for each of the past three years.

	Number of support staff		
	19__/__	*19__/__*	*19__/__*
Laboratory technicians			
Workshop support staff			
Storekeepers			
Administrative staff			
Specialized support staff (librarians, accountants, and others)			
Total			

Name of school or center ______________________________

D.5. *Schedule for Facilities, 19__/__*

Instructions: Use information for past year.

Purpose	Unit area (approx., in square meters) (1)	Number of units (2)	Capacity (trainee places) Per unit (3)	Total (4)
Teaching				
Classroom[1]				
Laboratories[2]				
Workshops[2]				
Support				
Library				
Audio-visual				
Storage				
Administrative				
Other				
Catering (dining and kitchen)				
Student services				
Residential				
Staff residences (approximate size category and number in that category)				
Total number				
Student dormitories or hostels (total number of places)				
Male				
Female				

1. Group classrooms by approximate size.
2. List and group by specialization (include associated preparation rooms).

Name of school or center ______________________________

D.6. *Space Utilization*

Instructions: Provide information for each column (see also example that follows this form).

Col. 1. List spaces by type of use or specialization; for example, classrooms (could be treated as group), drawing offices, laboratories (by specialization, as electrical engineering, mechanical engineering, physics), workshops (by specialization, as mechanical, bench, machine, electrical).

Col. 2. Enter number of workplaces for each group of specialized spaces (from D.5, col. 4).

Col. 3. For the theoretical, or maximum, capacity, multiply the number of workplaces by the hours (or periods) per week that the center or school is open and multiply the product by the number of weeks per year (or semester) that the center or school is open.

Col. 4. For each group of specialized spaces list by year the courses that actually use that facility.

Col 5. Enter the actual number of students enrolled in the course for the year (or semester).

Col. 6. Enter the hours (or periods) per week when students are actually scheduled to be using the facility (from the course curriculum).

Col. 7. Enter the number of weeks per year (or per semester) when the course actually uses the facility.

Col. 8. Multiply (5) by (6) by (7).

Col. 9. Divide (8) by (3).

Teaching space(s) (1)	*Number of workplaces* (2)	*Capacity in place-hours (or periods) per year (or semester)* (3)	*Course(s) using the facility* (4)	*Number of students enrolled in each course* (5)	*Hours (periods) per week spent in the facility* (6)	*Number of weeks per year (or semester) for which course uses facility* (7)	*Actual use in student-hours (or periods) per year (or semester)* (8)	*Utilization factor* (9)

This example illustrates the method for calculating utilization of a mechanical workshop and a physics laboratory where these facilities are used by two courses, a mechanical course and an electrical course.

Teaching space (1)	*Courses using facility* (4)	*Number of students enrolled* (5)	*Hours or periods per week spent in facility*[1] (6)	*Number of weeks per year facility used* (7)	*Actual use in student-hours per year* [(7)·(6)·(5)] (8)
Mechanical workshop	Mechanical				
	First year	50	6	36	10,800
	Second year	40	8	36	11,520
	Third year	38	12	36	16,416
	Electrical				
	First year	25	2	36	1,800
	Second year	23	2	36	1,656
Total					42,192
Physics laboratory	Mechanical				
	First year	50	4	36	7,200
	Second year	40	4	36	5,760
	Third year	38	4	36	5,472
	Electrical				
	First year	25	4	36	3,600
	Second year	23	4	36	3,312
	Third year	26	4	36	3,744
Total					29,088

Notes Column numbers correspond to numbers in D.6. For this example we assume a course length of 36 weeks per year.

1 This information is derived from the school curricula, as shown below (numbers in italics correspond to column 6 in the example).

	Mechanical course (hours per week)			*Electrical course (hours per week)*		
Curriculum	*First year*	*Second year*	*Third year*	*First year*	*Second year*	*Third year*
Mathematics	6	6	6	6	6	6
Social studies	4	3	2	4	3	2
Physics						
Lab	*4*	*4*	*4*	*4*	*4*	*4*
Theory	2	2	2	2	2	2
Chemistry						
Lab	4	3	2	4	3	2
Theory	2	2	1	2	2	1

	Mechanical course (hours per week)			*Electrical course (hours per week)*		
Curriculum	*First year*	*Second year*	*Third year*	*First year*	*Second year*	*Third year*
Mechanical						
Workshop	*6*	*8*	*12*	*2*	*2*	*0*
Theory	4	4	6	1	1	0
Electrical						
Workshop	2	2	0	6	8	12
Theory	1	1	0	4	4	6
Total	35	36	35	36	35	35

Name of school or center ______________________________

D.7. *Annual Operating Costs*

Instructions: Complete for each of the past three years. Give expenditures in local currency. Operating costs are actual outlays of funds, regardless of their source. For example, if the government pays some part of salaries and a donor agency others, the combined cost to the government and the agency is recorded.

	Actual expenditure		
Item	*19__/__*	*19__/__*	*19__/__*
Salaries and allowances			
Teachers and instructors			
Salaries			
Other allowances			
Support staff, salaries and allowances			
Consumable materials[1]			
Maintenance of buildings and equipment			
Interest			
Utilities			
Travel			
Boarding costs			
Other[2]			
Total			

1. Consumable materials include such items as metal, wood, building materials, welding rods, oil, paper, small tools, and electronic components. It does not include equipment expected to have a working life of more than two years (for example, lathes, typewriters, and signal generators); these are capital items (see D.8).
2. If more than 10 percent of total expenditure, itemize. This category includes the cost of any student stipends.

D.8. *Capital Expenditure*

Instructions: Complete for each of the past three years. Give expenditures in local currency.

Item or category	*19__/__*	*19__/__*	*19__/__*
Construction			
New equipment and machinery			
Other			
Total			

E

Efficiency of Operations: Forms for Interviews and Observation

The questionnaires and forms in this appendix are to be completed by the evaluation team. The forms provided here are intended as a guide for systematic collection of information; supplementary questions may be needed to clarify the arrangements in the particular center.

The first step is an initial interview with the director or head teacher, at which questionnaire E.1 is completed.

Next, at a meeting with the director or head teacher and the senior staff, the evaluation team completes a set of questionnaires:

E.2 (Selection and Admission of Students and Trainees)
E.3 (Job Placement and Follow-up)
E.4 (Staff Selection and Promotion)
E.5 (Staff Development Plans)
E.6 (External and Industrial Activities)
E.7 (Management)

The team then observes in detail the institution's teaching and training activities and the use of equipment and facilities. On the basis of these observations and discussions with trainees and staff, the team completes the following forms:

E.8 (Teaching Activities Observed)
E.9 (Quality of Teaching Materials and of Training Programs)
E.10 (Upkeep of Laboratories and Workshops)
E.11 (Utilization of Equipment)
E.12 (Availability and Use of Small Tools and Measuring Equipment)
E.13 Availability and Use of Consumable Materials

The team also completes, in small group (six to eight persons) discussions, E.14 (for instructors) and E.15 (for students).

Name of school or center ______________________________

E.1. Questionnaire for Director or Head Teacher

Instructions: Circle the appropriate answer.

Recruitment and Employment of Teachers and Instructors

1. In your opinion, is it possible to recruit an adequate number of qualified and experienced vocational instructors?
   a. Yes
   b. No
2. If no, why?
   a. Pay is too low to attract experienced people.
   b. This locality is not attractive.
   c. Other (explain)
3. What is the annual turnover of instructors, as a percentage of total teaching staff?
   a. More than 20 percent
   b. 11–19 percent
   c. 5–10 percent
   d. Less than 5 percent
4. If the turnover is greater than 10 percent a year, what is the principal reason?
   a. Death, retirement, or illness
   b. Transfer to private industry
   c. Transfer to other jobs in government service
   d. Transfer to another training center or school
   e. Other (explain)
5. If your staff members are moving to industry or other jobs, what is the reason?
   a. Better pay
   b. Better conditions and benefits
   c. Other (explain)
6. In your judgment, how satisfactory is the performance of your instructors?
   a. Staff as a whole is in need of major training and upgrading.
   b. Most staff need some additional training, skills, and experience.
   c. Generally satisfactory, but some staff members need more training in specific areas.
   d. Satisfactory
7. If staff need more training or experience, in what areas?
   a. Professional or technical knowledge
   b. Practical or technical skills
   c. Ability to teach
   d. Experience in industry
   e. Management training
   f. Other (explain)

Quality of Output and Graduates

8. Are graduates from your program prepared satisfactorily for employment in industry in fields relevant to their training?
   a. Yes
   b. No
9. If no, why?
   a. Training programs are too short.
   b. Teachers are not sufficiently well trained or experienced.
   c. Students are not sufficiently motivated.
   d. Content or balance of training course is not relevant to employment needs.
   e. Facilities and equipment are below standard.
   f. Other (explain)
10. How do your graduates get jobs?
   a. Industry approaches the center or school.
   b. The center or school contacts industries.
   c. Personal initiative is taken by graduates.
   d. Other (explain)
   e. Don't know
11. What percentage of your graduates get jobs in the fields they were trained for?
   a. 76–100 percent
   b. 50–75 percent
   c. Less than 50 percent

General

12. In your opinion, which *two* of the following measures would most improve the training offered in your institution?
   a. Improve buildings
   b. Improve equipment
   c. Change the course of study
   d. Improve training materials
   e. Increase number of instructors
   f. Upgrade instructors
   g. Increase supply of such materials as metals, paper, and spare parts
   h. Improve supervision of the institution by central ministry
   i. Improve guidance and counseling of students
   j. Improve the selection process for incoming students
   k. Establish closer relations with employers and industry
   l. Other (explain)

Name of school or center ______________________

E.2. Selection and Admission of Students and Trainees

Instructions: For the most recent year, check if applicable or provide information.

1. Tr:al number of applicants ______
2. Total number of admissions ______
3. What are the criteria for admission to a course as a trainee?
   a. Age (specify) ______
   b. Years of general education completed (specify) ______
   c. Nomination by government department ☐
   d. Sponsorship by industry ☐
   e. Ability to pay fee ☐
   f. Not employed ☐
   g. Other (specify) ______
4. What is the method of selection?
   a. Written information ☐
   b. Interviews ☐
   c. Practical test ☐
   d. Theory test ☐
   e. Health examination ☐
   f. Other (specify) ______
5. Is there a special budget for expenditures on selection? Y N
6. Is there special provision for admission of handicapped trainees? Y N
7. If yes, give details. ______
8. What percentage of students selected is sponsored by
   a. Government departments? ______
   b. Private industry? ______
9. What percentage of students admitted is recruited from
   a. The town or city in which the center is located? ______
   b. The province or region (but not the city or town) in which the center is located? ______
   c. Outside the province or region? ______

E.3. Job Placement and Follow-up

1. Are graduates helped to find employment? [Y] [N]
2. If yes,
   a. Does the school or training center operate a placement service? [Y] [N]
   b. Does the ministry of labor arrange placement? [Y] [N]
   c. What other help is given? (Specify.) ____________________
3. If yes to (2a), what services are provided? (Describe briefly.) ____________________
4. a. What percentage of graduates or trainees is in jobs within six months? 75 ☐ 50 ☐ 25 ☐ 10 ☐
   b. Within one year? 75 ☐ 50 ☐ 25 ☐ 10 ☐
5. In which trades is it easiest to place graduates? (1 indicates easiest.)
   1. ____________________
   2. ____________________
   3. ____________________
6. In which trades is it most difficult for graduates to obtain employment? (1 indicates most difficult.)
   1. ____________________
   2. ____________________
   3. ____________________
7. Is there a follow-up service? [Y] [N]
8. If yes,
   a. For how many years after graduation? ____________________
   b. What is the frequency of follow-up? ____________________
9. Is there a special budget for placement and follow-up services? [Y] [N]

E.4. Staff Selection and Promotion

1. What are the minimum criteria for appointment as assistant instructor?
   a. General education (how many years?) ☐ ______
   b. Technical education or vocational training (how many years?) ☐ ______
   c. Technical teacher training course (state length) ☐ ______
   d. Trade experience (how many years?) ☐ ______
   e. Practical test before appointment ☐
   f. Satisfactory personal interview ☐
   g. Medical ☐
   h. Age (specify) ☐ ______

E.5. Staff Development Plans

1. What is the basis for determining the number and type of instructors?
   a. Hours or periods of teaching required in each subject or specialization ☐
   b. Student-staff ratio, by course or training program ☐
   c. Student-staff ratio, for center as a whole ☐
   d. Combination of (a), (b), and (c) ☐
2. What is the nominal weekly teaching duty in periods (give length) or in hours? ________
3. What is the present average weekly teaching duty for all staff, in hours? ________
4. If (3) differs from (2), explain. ________
5. Is there a staff development plan? Y N
6. If yes, does the plan include arrangements for
   a. Technical upgrading? Y N
   b. Teacher training? Y N
      Pre-service Y N
      In-service Y N
   c. Management training for senior staff? Y N
7. If yes to (5), is the plan adequate? Y N
8. If yes to (5), is there a regular review of implementation of the plan? Y N
9. Is there a budget for staff development? Y N

E.6. External and Industrial Activities

1. Does the center provide any training programs designed jointly with a firm for that firm's employees? [Y] [N]
2. If yes, give details of the nature, length, and frequency of that program and the number trained.
3. Does the center provide any support—technical, financial, or the use of its facilities—for graduates who are self-employed entrepreneurs? [Y] [N]
4. If yes, describe. ______
5. Does the center provide any technical or other support to local industry? [Y] [N]
6. If yes, describe the nature and amount of such support. ______
7. Does the center or school undertake production activities or provide services other than training for which it receives income? [Y] [N]
8. If yes, list the products or services, the amount of production or activity, and the value or income.

Product or service	*Output (physical units, or hours of service)*	*Value or income*

9. If yes to (7), describe staff and trainee involvement in the activity. ______

E.7. Management

Responsibilities

Instructions: For each of the following, check Y if the school is directly responsible for that activity. If N is checked, indicate the body (for example, a central ministry or a regional office of a ministry) that is responsible.

a. Recruitment and appointment of teaching staff	Y	N	________
b. Recruitment and appointment of support staff	Y	N	________
c. Recruitment or selection of students	Y	N	________
d. Design of curricula and syllabuses	Y	N	________
e. Adaptation of curricula and syllabuses to local conditions	Y	N	________
f. Revision of curricula and syllabuses	Y	N	________
g. Preparation of teaching and training materials	Y	N	________
h. Design of examinations	Y	N	________
i. Marking of examinations or tests	Y	N	________
j. Purchase of equipment	Y	N	________
k. Purchase of consumable materials	Y	N	________

Coordination with Local Industry

a. Is there an advisory body? Y N
b. How often does it meet? ________________
c. In what areas is it active? ________________

Instructor Staff

a. Do instructors work as a team? Y N
b. Are there senior instructors or heads of department with responsibility for all courses in their trade? Y N
c. Are duties and terms of reference of staff given in writing? Y N
d. How often are staff meetings held? ________________

Organization

a. Does the center operate on single, double, or triple shifts (specify)? ____________
b. Is there a center timetable for the year? Y N
c. Is there a workshop loading chart? Y N
d. Are there individual staff teaching timetables? Y N
e. During what hours (or periods) is the center open each week? ________________
f. How many weeks each year does the center operate? ________________

Records

a. Does the center have records of trainee selection and admission? [Y] [N]
b. Are attendance registers maintained? [Y] [N]
c. Is there a chart or other method of monitoring trainee progress? [Y] [N]
d. Are records kept of trainee performance in trade tests or other examinations? [Y] [N]
e. Are records kept of trainees' careers after graduation? [Y] [N]
f. Are records kept of instructors' qualifications and experience? [Y] [N]
g. Are records kept on instructors' and trainees' absences? [Y] [N]
h. Are records kept on training taken by instructors? [Y] [N]
i. Are the following teaching records available for examination?
   Curricula [Y] [N]
   Course programs [Y] [N]
   Lesson plans [Y] [N]
   Instruction or job sheets [Y] [N]
j. Are the following financial records available for examination?
   Teaching staff salaries [Y] [N]
   Support staff salaries [Y] [N]
   Expenditure on consumable materials [Y] [N]
   Maintenance costs of buildings and equipment [Y] [N]
   Consumption and cost of electricity, gas, and other services [Y] [N]
   Taxes paid [Y] [N]

Equipment, Spare Tools, and Consumable Materials

a. Is an inventory of equipment and materials maintained? [Y] [N]
b. What is the system for controlling use of materials from stores? ________________
c. What is the procedure for purchasing imported items—equipment, spare parts, and materials? ________________
d. What is the procedure for purchasing locally made items or local materials? ________________

Accounting

a. Are accounts comprehensive and up to date? [Y] [N]
b. Are costs analyzed to give costs per trainee or per graduate? [Y] [N]
c. Are comparative costs used as a management tool? [Y] [N]

Name of school or center ____________________

E.8. *Teaching Activities Observed*

Instructions: Complete for each class or course observed. Y, yes; N, no; E, excellent; G, good; F, fair; P, poor.

	Curriculum		*Teaching methods used*					*Teaching materials used*		*Teaching aids used*			*Performance evaluation*	
Skill or specialization	*Course program available*	*Lesson plan available*	*Notes dictated to students*	*Notes copied from blackboard*	*Group demonstration*	*Individual instruction*	*Programmed instruction*	*Instruction sheets*	*Information sheets*	*Audio-visual*	*Charts*	*Models*	*Quality of trainees' work*	*Quality of instruction*
1.	Y N	Y N	Y N	Y N	Y N	Y N	Y N	Y N	Y N	Y N	Y N	Y N	E G F P	E G F P
2.	Y N	Y N	Y N	Y N	Y N	Y N	Y N	Y N	Y N	Y N	Y N	Y N	E G F P	E G F P
3.	Y N	Y N	Y N	Y N	Y N	Y N	Y N	Y N	Y N	Y N	Y N	Y N	E G F P	E G F P
4.	Y N	Y N	Y N	Y N	Y N	Y N	Y N	Y N	Y N	Y N	Y N	Y N	E G F P	E G F P
5.	Y N	Y N	Y N	Y N	Y N	Y N	Y N	Y N	Y N	Y N	Y N	Y N	E G F P	E G F P
6.	Y N	Y N	Y N	Y N	Y N	Y N	Y N	Y N	Y N	Y N	Y N	Y N	E G F P	E G F P
7.	Y N	Y N	Y N	Y N	Y N	Y N	Y N	Y N	Y N	Y N	Y N	Y N	E G F P	E G F P
8.	Y N	Y N	Y N	Y N	Y N	Y N	Y N	Y N	Y N	Y N	Y N	Y N	E G F P	E G F P
9.	Y N	Y N	Y N	Y N	Y N	Y N	Y N	Y N	Y N	Y N	Y N	Y N	E G F P	E G F P
10.	Y N	Y N	Y N	Y N	Y N	Y N	Y N	Y N	Y N	Y N	Y N	Y N	E G F P	E G F P

Name of school or center ______________________________

E.9. *Quality of Teaching Materials and of Training Programs*

Instructions: Complete for each class or course for which materials were inspected. E, excellent; G, good; F, fair; P, poor.

Skill or specialization	*Format of curricula and syllabuses*				*Teaching materials*		*Evaluation of quality of teaching material*
	By topic or subject, without description of treatment	*By topic or subject, with description of treatment*	*Based on learning or behavioral objectives*		*Teachers' notes with description of treatment*	*Students' notes, or training materials for self-paced work*	
			Course-based, nonmodular	*Modular*			
1.	Yes No	Yes No	Yes No	Yes No	Yes No	Yes No	E G F P
2.	Yes No	Yes No	Yes No	Yes No	Yes No	Yes No	E G F P
3.	Yes No	Yes No	Yes No	Yes No	Yes No	Yes No	E G F P
4.	Yes No	Yes No	Yes No	Yes No	Yes No	Yes No	E G F P
5.	Yes No	Yes No	Yes No	Yes No	Yes No	Yes No	E G F P
6.	Yes No	Yes No	Yes No	Yes No	Yes No	Yes No	E G F P
7.	Yes No	Yes No	Yes No	Yes No	Yes No	Yes No	E G F P
8.	Yes No	Yes No	Yes No	Yes No	Yes No	Yes No	E G F P
9.	Yes No	Yes No	Yes No	Yes No	Yes No	Yes No	E G F P
10.	Yes No	Yes No	Yes No	Yes No	Yes No	Yes No	E G F P

Name of school or center ______________________________

E.10. *Upkeep of Laboratories and Workshops*

Instructions: Complete for each class or course observed. Number of trainees and instructors are those at time of visit. E, excellent; G, good; F, fair; P, poor.

Workshop	*Number of trainees*	*Number of instructors*	*Structural condition: roof, walls, floors, windows*	*Condition of paint: walls, windows, doors*	*Cleanliness of floors, walls, machinery*	*Internal order: trainees, work flow, equipment*	*Electrical installations: fuses, boxes*	*Safety and protection*	*First aid and fire equipment*	*Lighting*	*Ventilation, temperature*	*Overall assessment*
1			E G F P	E G F P	E G F P	E G F P	E G F P	E G F P	E G F P	E G F P	E G F P	E G F P
2			E G F P	E G F P	E G F P	E G F P	E G F P	E G F P	E G F P	E G F P	E G F P	E G F P
3			E G F P	E G F P	E G F P	E G F P	E G F P	E G F P	E G F P	E G F P	E G F P	E G F P
4			E G F P	E G F P	E G F P	E G F P	E G F P	E G F P	E G F P	E G F P	E G F P	E G F P
5			E G F P	E G F P	E G F P	E G F P	E G F P	E G F P	E G F P	E G F P	E G F P	E G F P
6			E G F P	E G F P	E G F P	E G F P	E G F P	E G F P	E G F P	E G F P	E G F P	E G F P
7			E G F P	E G F P	E G F P	E G F P	E G F P	E G F P	E G F P	E G F P	E G F P	E G F P
8			E G F P	E G F P	E G F P	E G F P	E G F P	E G F P	E G F P	E G F P	E G F P	E G F P
9			E G F P	E G F P	E G F P	E G F P	E G F P	E G F P	E G F P	E G F P	E G F P	E G F P
10			E G F P	E G F P	E G F P	E G F P	E G F P	E G F P	E G F P	E G F P	E G F P	E G F P

Name of school or center ____________

E.11. *Utilization of Equipment*

Instructions: Complete for each laboratory or workshop inspected.

Laboratory or workshop (1)	What percentage of equipment is		If answer to (3) is less than 70 percent, this is because of						Is there a regular scheme for recording utilization of equipment?		Is there a regular maintenance program?		Give details of any major problems with utilization of equipment
	In good working order (2)	Used regularly (25 hours or more a week)	Shortage of materials	Lack of spare parts	Lack of instruments	Inappropriate equipment	Obsolete equipment	Other	Yes	No	Yes	No	

Name of school or center ______________________

E.12. Availability and Use of Small Tools and Measuring Equipment

a. Is there an adequate stock of small tools and measuring equipment? Y N
b. Are the small tools and measuring equipment in regular use? Y N
c. Are they well maintained and serviceable? Y N
d. Are the tool cupboards or tool stores well organized? Y N
e. Is there a system for controlling inflow and outflow of tools and equipment to trainees? Y N
f. Is there a storekeeper? Y N
g. If no, is the instructor responsible? Y N
h. If no to (7), is a trainee designated as storekeeper? Y N
i. Are worn-out and broken tools and equipment replaced without delay? Y N

Name of school or center ______________________________

E.13. Availability and Use of Consumable Materials

Note: Consumable materials are materials, such as metals, wood, building materials, welding rods, electric components, and paper, that are used in training. Small tools and instruments that have a working life of less than two years may also be included.

a. What is the approximate annual expenditure on consumable materials for each area or specialization for the past two years?

Skill area or specialization (list)	*Expenditure for consumable materials (local currency)*	
	198_/_	*198_/_*
Total expenditure		

b. Who determines annual expenditures? ______________________________
c. Who selects the materials to be purchased? ______________________________
d. How long does it normally take to procure materials? ______________________________
e. Is the store well organized? ______________________________
f. Is the storekeeper trained? ______________________________
g. What records are kept on use of materials? ______________________________

Name of school or center ______________________________

E.14. Questionnaire for Instructors

Instructions: This questionnaire is designed as a basis for an interview with a small group of instructors (about six to eight). The answers should record the consensus (if there is one) or indicate the diversity of views.

1. What course(s) do you teach?
2. In your opinion, are there enough instructors for the vocational program?
   a. Enough
   b. Too few
   c. No opinion
3. If there are too few instructors, what is the main reason?
   a. Pay is too low
   b. There is no interest in the speciality
   c. Other
4. What is your main reason for entering the teaching profession?
   a. Money
   b. Status or social position
   c. Good working conditions
   d. Employment stability
5. If you have colleagues who have left the teaching profession, what were the main reasons?
   a. Too few chances for promotion
   b. Mental fatigue or stress
   c. Pay too low
   d. Working conditions bad
   e. Duties too heavy
6. What is the range of class size in your courses? ______________
   Do you think this number is
   a. Adequate?
   b. Too large?
   c. Too small?
   d. No opinion
7. In your opinion, what is the level of the students' ability in relation to the planned level of the course?
   a. Superior
   b. Inferior
   c. The same
8. In your opinion, what is the main reason for students' dropping out?
   a. Inadequate level of knowledge
   b. Difficulty of travel to center or school
   c. Lack of discipline
   d. Health
   e. Financial reasons
   f. Availability of employment before graduation
   g. Family problems
   h. Other

9. Do you have enough teaching materials for your courses?
   a. Yes
   b. No
   c. Satisfactory in some ways, but not in others (give details)
10. Is the equipment adequate for your courses?
   a. Yes
   b. Insufficient in quantity
   c. Inadequate in quality or range
   d. Technologically obsolete
11. Is the equipment similar to that used in industry?
   a. Similar
   b. Superior
   c. Inferior
12. What do you think of the maintenance and cleanliness of workshops?
   a. Good
   b. Insufficient
13. In your opinion, is it easy for graduates to obtain employment?
   a. Easy
   b. Difficult
   c. Don't know
14. If it is difficult, what is the main reason?
   a. There is little demand for the specialty.
   b. The training is inadequate.
   c. Other (give details)
15. In your opinion, what two measures would contribute most to the improvement of the school or center?
   a. Improve buildings
   b. Provide more equipment
   c. Review and update curricula
   d. Improve materials
   e. Upgrade instructors
   f. Improve student selection
   g. Improve counseling and placement of graduates
   h. Coordinate courses more closely with the requirements of the market

Name of school or center ____________________

E.15. Questionnaire for Students or Trainees

Instructions: This questionnaire is designed as a basis for an interview with a small group of students or trainees (about six to eight). The answers should record the consensus (if there is one) or indicate the diversity of views.

1. What courses are you taking? (Record all courses mentioned.)

2. What were your main reasons for enrolling in the course?
   a. My employer is sponsoring me.
   b. I am unemployed or am a school leaver and want to improve my job prospects.
   c. I want to start my own business.
   d. I was not accepted in a course I preferred (give details).
   e. I want to learn a skill.
   f. Other
3. What do you think will be your chance of employment at the end of the course?
   a. Good
   b. Fair
   c. Poor
   d. Other
4. What is your opinion of the course, compared with your expectations?
   a. It meets my needs and expectations.
   b. I am disappointed by the course.
   c. If (b), give reasons.
5. In your opinion, which of the following aspects of the course are satisfactory or unsatisfactory? (S, satisfactory, U, unsatisfactory, ?, no opinion).

a. Level of training	S	U	?
b. Content of training	S	U	?
c. Number of instructors	S	U	?
d. Quality of instructors	S	U	?
e. Laboratory or workshop equipment	S	U	?
f. Exercises in laboratories or workshops	S	U	?
g. Discipline	S	U	?
h. Other aspects (specify)	S	U	?

6. What is the average class size in your courses?
   a. Theory class ____________
   b. Laboratory or workshop ____________

   For theory class, is this number
   a. Adequate?
   b. Too large?
   c. Too small?

   For laboratory or workshop, is this number
   a. Adequate?
   b. Too large?
   c. Too small?
7. In your opinion what is the level of training in the course in relation to the ability of the students? For theory course,
   a. Course too difficult
   b. Course too easy
   c. Level about right

   For laboratory or workshop,
   a. Course too difficult
   b. Course too easy
   c. Level about right
8. In your opinion, what is the main reason for students' dropping out?
   a. Course too difficult
   b. Difficulty of travel to center or school
   c. Lack of discipline
   d. Health
   e. Financial reasons
   f. Employment available before graduation
   g. Family problems
   h. Other
9. Do you consider that you have received adequate guidance
   a. About the course or training? Y N
   b. About job availability? Y N
   c. About other possible careers? Y N
10. In your opinion, what two actions would most improve the course(s)?
    a. Improve buildings
    b. Improve equipment
    c. Raise standard of training staff
    d. Raise standard of course
    e. Increase length of course
    f. Provide better guidance to trainees before course
    g. Tighten discipline

11. Do you consider your views to be representative of all students? [Y] [N]
    If no, give details.

F

External Efficiency: Sample Questionnaires

F.1. Questionnaire for Employers

Instructions: Check appropriate box or supply information requested.

Name of company ______________________________

Industry ______________________________

Number of workers 50–200 ☐ 200–500 ☐ more than 500 ☐

This questionnaire refers only to skilled workers and higher-skilled workers or craftsmen.

1. Approximately how many workers in these occupations did you hire last year?

	Skilled workers	*Higher-skilled workers*
a. Less than 10	☐	☐
b. 10–20	☐	☐
c. 20–30	☐	☐
d. 30–40	☐	☐
e. 50–100	☐	☐
f. 100–200	☐	☐
g. 200–300	☐	☐
h. More than 300	☐	☐

2. Can you easily get workers in these occupations?
   a. Skilled [Y] [N]
   b. Higher-skilled [Y] [N]
3. If yes, do they have the type of training you would like to see in your workers?
   a. Skilled [Y] [N]
   b. Higher-skilled [Y] [N]
4. If you answered no to (2) or (3), what do you do?
   a. Offer higher wages to attract better workers from other firms ☐
   b. Offer higher wages to attract new graduates ☐
   c. Offer more fringe benefits ☐
   d. Accept less qualified candidates ☐
   e. Other ☐

5. If you answered (a), (b), or (c), how much higher? or what extra fringe benefits?
   a. 10 percent ☐
   b. 20 percent ☐
   c. 30 percent ☐
   d. Type of fringe benefits ______________
6. How do you recruit new workers?
   a. Advertise in newspapers ☐
   b. Use word-of-mouth of employed workers ☐
   c. Contact vocational schools ☐
   d. Contact training institutes and skill-training centers ☐
   e. Provide own training ☐
   f. Other ☐
7. How many applicants do you get for each job opening?
   a. Skilled workers ______________
   b. Higher-skilled workers ______________
8. Which of the following criteria do you use when hiring new workers? (Choose the two most important ones.)
   a. References from former employers ☐
   b. References from other workers ☐
   c. References from vocational schools ☐
   d. References from institutes and training centers ☐
   e. Evaluation of vocational school grades ☐
   f. Examination and practical tests at the plant ☐
   g. Other ☐
9. Which candidate of those described below is most likely to be hired?

	Skilled workers	*Higher-skilled workers*
a. Middle school with skill-center training	☐	☐
b. Middle school with one year's experience	☐	☐
c. Technical vocational high school with no experience	☐	☐
d. Academic high school with one year's experience	☐	☐

10. Why do you prefer your choices? (Choose the two more important reasons for each.)

	Skilled workers	Higher-skilled workers
a. They have more theoretical knowledge.	☐	☐
b. They have more practical knowledge.	☐	☐
c. They have more theoretical and practical knowledge.	☐	☐
d. They have more initiative.	☐	☐
e. They are more productive immediately.	☐	☐
f. They can advance faster into higher skills.	☐	☐
g. They are more reliable.	☐	☐
h. They follow instructions better.	☐	☐
i. Their starting salary is lower.	☐	☐

11. Even though candidates seem to have the background you prefer, you probably reject some before hiring one. How many of the same background do you usually reject before hiring one worker?
    a. Skilled workers __________
    b. Higher-skilled workers __________

12. In general, why are candidates rejected?

	Skilled workers	Higher-skilled workers
a. They lack theoretical knowledge.	☐	☐
b. They lack practical knowledge.	☐	☐
c. They lack the proper attitude.	☐	☐
d. They ask too much money.	☐	☐
e. They lack theoretical and practical knowledge.	☐	☐

13. When you hire workers without experience, how do you train them?
    a. Foremen and other skilled persons show them how to work. ☐
    b. We provide special in-plant training. ☐
    c. We sponsor training in skill centers or vocational training institutes. ☐

14. Have you hired graduates from vocational high schools (skill centers), in the past few years? [Y] [N]

15. If yes, how do you rate the graduates of technical high schools (skill centers) compared with workers in the same occupation but with different educational backgrounds?

	Skilled workers	Higher-skilled workers
a. They are the same as other workers.	☐	☐
b. They are better.	☐	☐
c. They are not as good.	☐	☐
d. No opinion	☐	☐

16. If you answered that they are not as good, why?

	Skilled workers	Higher-skilled workers
a. They lack theoretical knowledge.	☐	☐
b. They lack practical knowledge.	☐	☐
c. They are not acquainted with the machinery in the plant.	☐	☐
d. They lack discipline.	☐	☐
e. Other ______	☐	☐

17. If you answered that they are as good or better, do the graduates usually demand higher wages than other applicants? [Y] [N]
    By how much (percent)? 10 ☐ 20 ☐ 30 ☐ more ☐
18. Are you familiar with the vocational school (skill center)? [Y] [N]
19. If so, what is your opinion of it?
    a. Good ☐
    b. Average ☐
    c. Poor ☐
    d. No opinion ☐

F.2. Questionnaire for Employees

Instructions: This questionnaire is designed as a basis for an interview with a small group of employees (about six to eight). The interview should record the consensus, if there is one, or indicate the diversity of views.

If it is not possible to administer a questionnaire to employees, find out whether employers can provide individual records on relevant employees. These might include occupation, sex, age, education, training, and earnings.

Name of company ______________________________

Industry ______________________________

Number of workers 50–200 ☐ 200–500 ☐ more than 500 ☐

Name of employee ______________________________

1. Occupation
2. Age
   a. 16–18
   b. 19–21
   c. 22–25
   d. 26 and older
3. Level of formal schooling before entering training program
   a. Primary school
   b. Middle school
   c. Academic high school
4. Type of training program
   a. Technical high school
   b. Training in skill center
   c. On-the-job training in industry
   d. Apprenticeship
   e. Other ______________________________
5. Type of program
   a. Mechanical
   b. Chemical
   c. Electrical
   d. Electronics
   e. Other
6. Length of training program
   a. 1–6 months
   b. 7–12 months
   c. 13–18 months
   d. 19–24 months
   e. 25–36 months
7. Year when graduated from formal school ____________
8. Year when graduated from (or finished) training ____________
9. Is this your first job? [Y] [N]
10. If no, what occupation did you have before this one? ____________

11. How long did it take you to find a job after training?
    a. I found a job immediately.
    b. 3 months
    c. 6 months
    d. 9 months
    e. 1 year
    f. More than a year
12. How much do you earn now? __________
13. How much did you earn last year? __________
    How much did you earn the year b[illegible]? __________
14. When you graduated, did you expect t[illegible]
    a. More than now?
    b. Less than now?
    c. About the same?
    d. Don't know
15. Is your present occupation related to your training? [Y] [N]
16. If no, why?
    a. I did not find work in the occupation for which I trained.
    b. I did not wish to work in the occupation for which I trained.
17. What type of knowledge do you think is primarily needed for performing efficiently in your job?
    a. Theoretical
    b. Practical
    c. Experience
    d. Theoretical and practical
    e. Theoretical and experience
    f. Practical and experience
18. Are you applying in your work what you learned during your training?
    a. No
    b. A little
    c. A lot
19. If you answered (b) or (c), of all the things you learned in your training, what is the one thing that is most useful for your work?
    a. Use of machinery
    b. Theoretical instruction
    c. Advice of teachers
20. In your work, are you using equipment similar to that used during your training? [Y] [N]
21. Was what you learned during your training enough to enable you to perform successfully on your job? [Y] [N]

22. If no, why?
    a. Training did not provide experience.
    b. Training did not provide practical knowledge.
    c. Training did not provide theoretical knowledge.
    d. Training did not provide practical or theoretical knowledge.
    e. Training was too short.
    f. Training was too long.
    g. Other
23. Did some of your co-workers go through the same type of training as you did? [Y] [N]
24. If yes, what is your opinion of their capacities compared with co-workers who did not go through the same type of training?
    a. They are better workers.
    b. They are not as good.
    c. They are equally good.
    d. Don't know.

25a. If the answer was (a), why are they better?
    a. They have more knowledge.
    b. They have more experience.
    c. They are more responsible.
    d. They behave better.

25b. If you consider your training mates less capable than other workers, why is that so?
    a. Other workers have more knowledge.
    b. Other workers have more experience.
    c. Other workers are more responsible.
    d. Other workers behave better.

26. Do you think having gone through your particular type of training has paid off? [Y] [N] Don't know [ ]
27. If you think it has paid off, why?
    a. I got a good job.
    b. I am earning more money than without the training.
    c. I have more prestige than somebody without my training.
    d. It opened up possibilities for employment and advancement.
28. If you don't think it has paid off, why?
    a. I didn't get a good job.
    b. I am not earning more than I would have earned otherwise.
    c. I have little status at work.
    d. It did not open up possibilities for advancement.

29. How did you get your job?
    a. Through school placement
    b. Through friends
    c. Through newspaper ads
    d. Through an employment agency
    e. Other
29. Would you recommend to your friends or relatives the same type of training you took? [Y] [N]

tively the institution uses the available resources—and at external efficiency—how well the institution fulfills the purposes for which it was established. To that end they take the reader step by step through the evaluation procedure, from the first contacts with school administrators, through observation of classes and workshops, to interviews with teachers, trainees, graduates, and employers.

The evaluation materials have many applications: as a basis for regular surveys and for comparison of a school's performance over the years, as a managerial tool for keeping running records of school operations, and as a convenient format for self-assessment and follow-up by the institution.

Gordon Hunting is a technical educator in the East Asia and Pacific Regional Office of the World Bank. Manuel Zymelman is special adviser for the economics of education in Africa for the World Bank. Martin Godfrey is a fellow at the Institute of Development Studies, University of Sussex, United Kingdom.

Diversified Secondary Education and Development: Evidence from Colombia and Tanzania

George Psacharopoulos and William Loxley

In the 1960s prevailing wisdom held that, to prepare young people for the labor market in developing countries, the secondary school curriculum should be diversified to include prevocational subjects. This book—the first in-depth analysis of diversified education—warns that the economic rationale for such programs should not be accepted uncritically. Case studies in Colombia and Tanzania indicate that graduates of diversified schools do not perform better in the labor market than do graduates of purely academic institutions, and that the cost of diversified programs is higher. The authors' findings will be of particular interest to teachers and administrators, policymakers, and educational researchers.

Education Finance Simulation Model

Manuel Zymelman and Fredrik K. Yhu

The computer model presented here simulates educational and financial policies of school systems in developing countries and allows decisionmakers to choose among a wide variety of policies that are feasible in the local context. The book contains a user's manual that describes the model's systems, design, input, output, and operational procedures. An optional program diskette is available that can be used with an IBM-PC computer; its use requires a minimal understanding of the "Multiplan" software package.

[illegible]

World Bank Staff Working Paper 7[illegible]

[illegible]

[illegible]

ADDING VALUE:

Manual 2

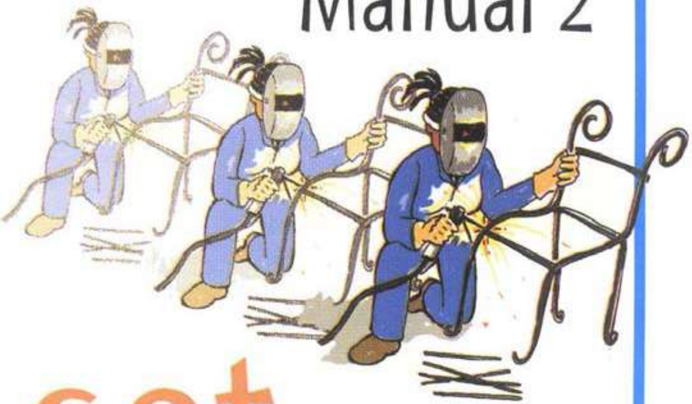

How to set up and run a TAP

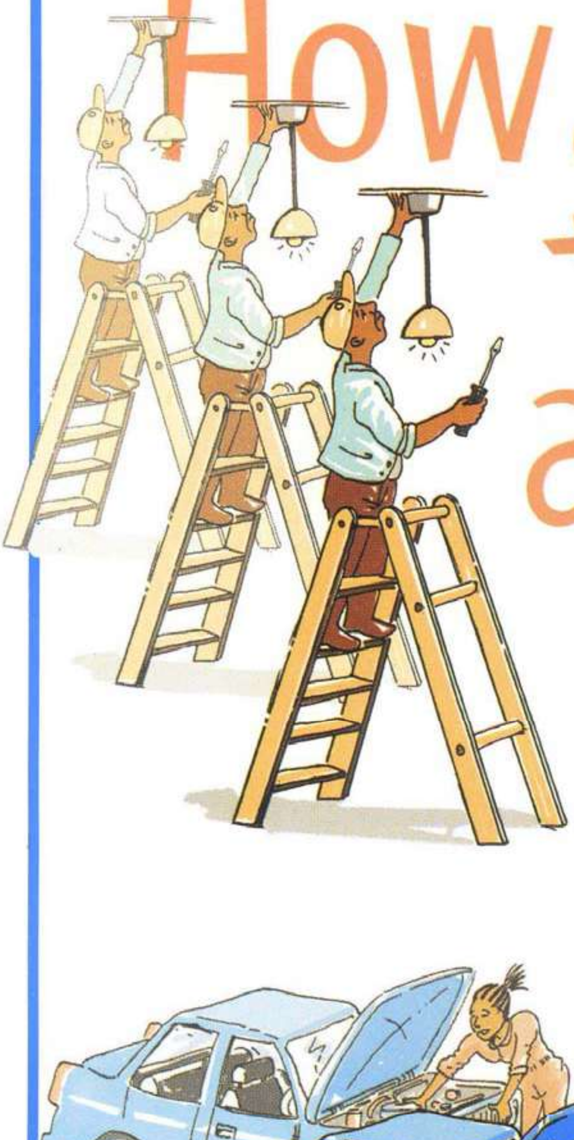

Traditional Apprenticeship Programme

gtz - istarn

This manual is intended to provide guidelines and support to those interested in setting up their own Traditional Apprenticeship Programme (TAP). It takes the form of a workbook to guide implementers in making choices and decisions about their particular TAP.

This manual should help interested institutions and organisations develop a TAP Programme using the experiences of GTZ-ISTARN as a foundation. However, this manual is not a blueprint, which should be followed slavishly, it has been produced to provide guidelines based on what is thought to be best practice.

This manual has a complimentary first volume entitled 'Is a Traditional Apprenticeship Programme an Option for You?' which describes what a TAP is. Both manuals are seen as an aid to replication and to the implementation of technical training programmes for the informal sector in different circumstances and locations.

Adding Value:

Manual 2

How to set up and run a TAP

Traditional Apprenticeship Programme

Manual produced by ISTARN, Zimbabwe

ISTARN
PO Box 559, Mutare
Tel: 263-20-68742
Fax: 263-20-68590
E-mail: gtzmtre@icon.co.zw

ISBN Number

You'll need to decide what you want to do about copyright.

This manual was developed by Peter Chitiyo, the Senior TAP Advisor of ISTARN, in collaboration with Janet Shapiro of Nell and Shapiro cc, 27 Eighth St, 2196 Parkmore, Sandton, South Africa.

Layout and art work by **ACTION ,** Harare.

INTRODUCTION: What is ISTARN?

The Informal Sector Training and Resources Network (ISTARN) is a Zimbabwe-based programme. It is a joint venture between the Zimbabwean and German governments, and receives financial and technical support from the German government through the Deutsche Gesellschaft für Zusammenarbeit (GTZ). The project was initiated in 1995 in Masvingo, Zimbabwe, where a number of interventions were piloted, all of them aimed at assisting in the creation of jobs in the informal sector, in order to address the problem of unemployment which is endemic in Zimbabwe.

ISTARN has tried to develop an integrated approach to strengthening the informal sector, and its interventions have included a Small Business Advisory Programme, a Marketing Support Programme, and a programme to develop and strengthen Informal Sector Associations. The selection of interventions is intended to create an integrated package for the informal sector which will result in more, stronger and bigger businesses, creating sustainable jobs.

Among the initiatives piloted was a Traditional Apprenticeship Programme (TAP). This used a traditional practice of skills transfer to increase the potential for people learning skills through apprenticeships in the informal sector to set up and succeed in their own informal businesses. The intention of the TAP was to add value to the traditional practice, without excessive interference.

Initially piloted in 1996, the programme has shown very encouraging results, and has generated much interest. ISTARN is now in its replication phase, with Manicaland, Zimbabwe as the site of replication. The TAP is being piloted here in different forms, with different host agencies.

As part of the replication process, ISTARN has produced a set of two manuals, under the title Adding Value. The first describes what a TAP is and what is needed in order to set one up. This, the second manual, provides guidelines for implementation. By reading the first manual, we hope that decision-makers in organisations and institutions that are potential hosts for a TAP - training colleges, vocational training centres, business associations, non-governmental organisations (NGOs) and private training institutions - will get enough background and information to enable them to decide whether a TAP is the right option for them. Once they have decided to go ahead, then this second manual should provide a useful guide on what to do, when to do it and how to do it. Manual 2 is addressed to the team charged with implementing a TAP.

The manuals are not blueprints. They are intended, rather, as guides so that, as development workers, we are able to build on one another's experience and learnings. Manual 2 has been written as a workbook, and space is provided for you to think through your own situation so that you can make appropriate decisions for your particular context. We look forward to hearing from you about your TAP experiences.

The ISTARN Team
August 1999

CONTENTS

ABBREVIATIONS

EO	Enterprise Owner
GTZ	Deutsche Gessellschaft für Sussammenarbeit (German Agency for Technical Cooperation)
ILO	International Labour Organisation
ISA	Informal Sector Association
ISTARN	Informal Sector Training and Resources Network
MSP	Marketing Support Programme
NGO's	Non Governmental Organisations
'O' Level	Ordinary Level (4 years of secondary school)
SAP's	Structural Adjustment Programmes
SBAP	Small Business Advisory Programme
TA	Traditional Apprentice
TAP	Traditional Apprenticeship Programme

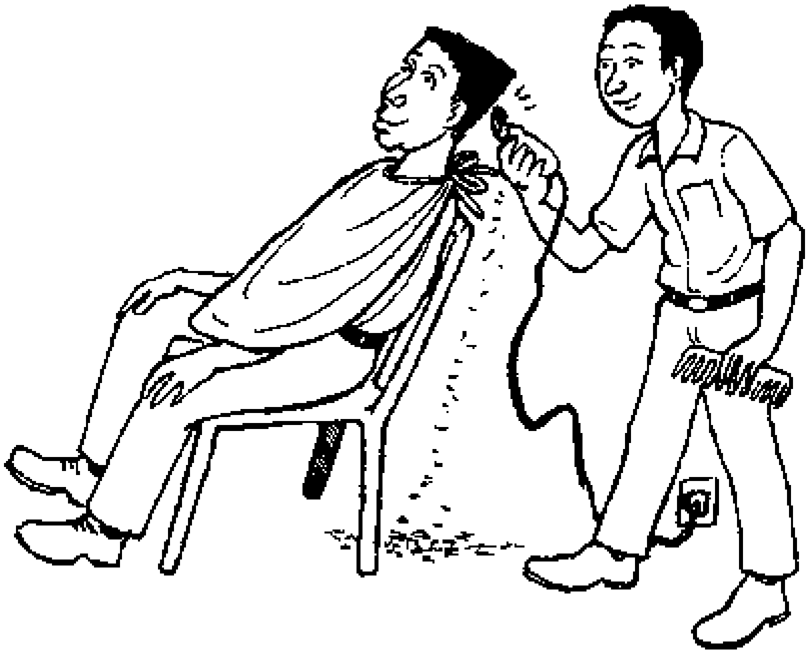

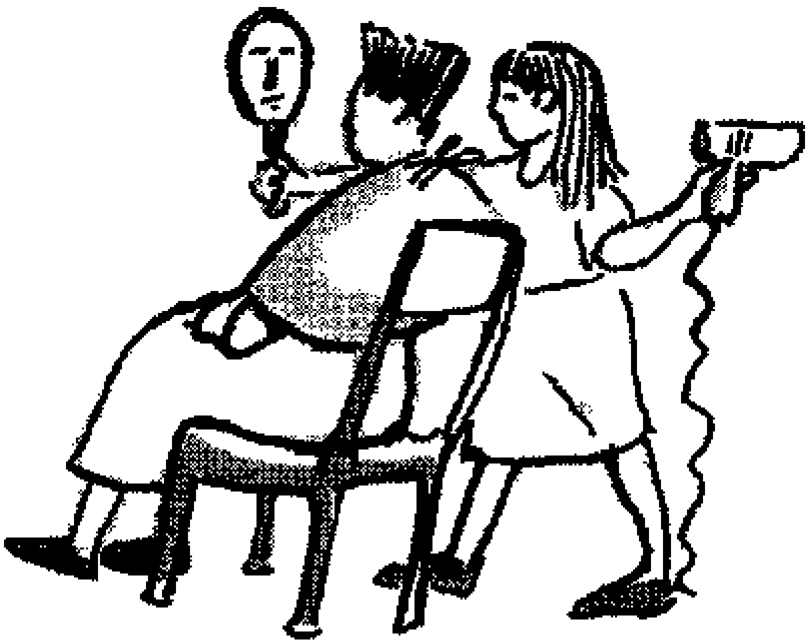

PART 1: STARTING OUT

SECTION 1: Starting a TAP in your organisation

In Manual 1 of this set, Is a Traditional Apprenticeship Programme an Option for You?, we describe a Traditional Apprenticeship Programme (TAP) as follows:

> A development intervention aimed at providing vocational skills training. It is cost-effective, relevant and accessible to relatively large numbers of people and is particularly effective where there is high unemployment and an established informal sector.
>
> A TAP is based on a traditional practice which has existed world-wide for many centuries and which has been shown to be widespread in southern Africa.
>
> A TAP adds value to the traditional practice by interventions that make it more likely that the graduates of the programme will be successful in creating jobs for themselves and, possibly, for others.
>
> In a typical TAP, based on the ISTARN model, participants come from the ranks of the unemployed, selection is based on entrepreneurial aptitude, the major site and vehicle of skills transfer is the workplace, appropriate skills involve manufacturing or service, value is added through short-term technical training, utilising existing facilities and training capacity, and by providing short-term business training and support.

A: Why have you decided to go ahead and set up a TAP?

In the first manual in this set, we discussed in detail the reasons why an institution or organisation might decide to set up a TAP. In summary, the reasons are likely to include the following:

- The trend towards increased unemployment in the formal sector is accelerating.
- The informal sector is increasingly becoming a more significant site of employment than the formal sector in sub-Saharan African countries.
- The TAP offers an innovative approach to skills development training that is relevant to the informal sector and cost effective in terms of the input required to create an employment opportunity.
- The TAP does not require entrants with relatively high level educational qualifications and so meets the challenge of equity.
- The TAP adds value to the existing traditional practice by injecting innovative practices, through the technical training component, into a sector that is notoriously conservative. Both quality and productivity can, thus, be improved.

B: Are your context and institution/organisation appropriate for a TAP?

If you have got as far as Manual 2, then you have decided that your context and institution/organisation are appropriate for a TAP.

A suitable external environment for a TAP is likely to include all or most of the following conditions:

• There is ongoing high unemployment and a low capacity in the formal sector to absorb or even retain workseekers.

• There is an existing informal sector, playing a significant role in the local economy.

• There are concentrations of business activity in certain nodal points, providing markets for informal sector outputs.

• There is already a traditional practice of informal apprenticeships.

• The approach of government to the informal sector, at the local, regional and national levels, is at least constructive, even if restrictive regulations are in place.

ISTARN invested time and money in doing detailed surveys of the traditional practice and of the informal sector in the pilot TAP area. At the very least, you need to know:

• That there is a traditional practice where people running small businesses based on a trade or skill take on “helpers” who learn the trade or skill, while providing cheap or free labour.

• What kinds of services and goods are offered in the informal sector in your area.

A suitable institutional or organisational environment for a TAP is likely to be characterised by at least some of the following:

• Clarity about the problem or issue the organisation is addressing - knowing what the programme is supposed to achieve.

• A carefully researched and thought through project concept which anticipates, to the degree possible, potential problems - although there is general agreement that there will always be problems no-one has anticipated!

• Sufficient staff with experience and skills appropriate to vocational training for the informal sector.

• An established administrative and co-ordinating infrastructure (but not necessarily a physical infrastructure, as training facilities belonging to other organisations and institutions can be used).

• A business and market-related orientation.

• Flexibility and creativity in both decision-making and implementation.

• Participation in a network of programmes involved in support to the informal sector.

• Flexible funding, linked to careful costing - in other words, costs should be kept low, but some funding needs to be available to be used flexibly as the needs of the programme become clearer.

• Good monitoring and evaluation systems.

C: Who should be involved in setting up and running a TAP?

In Manual 1, we describe the ideal TAP Team as being made up of:

• Someone with the power to make key decisions, particularly in relation to the use of the budget.

• The TAP Co-ordinator or Manager with overall responsibility for planning, implementation and monitoring and evaluation.

• Training providers, whether internal or external partners.

• One or more fieldworkers to support the Co-ordinator/Manager.

Some questions for you to answer?

1. Are you operating in an environment where there is high unemployment and a tow capacity for the formal sector to absorb workseekers?

____

2. Is there a traditional apprenticeship practice already operating in your area?

____

3. Are there opportunities for small scale entrepreneurs to set up their own trade/skill-based enterprises in your area?

____

4. What additional information do you need to be able to answer the above questions fully?

____
____
____

5. What needs to happen in your institution/organisation to make it a more suitable environment for the implementation of a successful TAP?

____
____
____

6. Do you think you have the right team to make a success of the TAP?

____

7. What roles and responsibilities will the different people in the team take on?

____
____
____
____
____

8. How are you going to ensure that the necessary steps are taken to give you the information you need and to increase the likelihood of your TAP succeeding?

____
____
____

SECTION 2: Thinking about the market

Although a TAP is a form of vocational skills training, what makes it different from the usual kind of training you might get at a technical training college, for example, is that it is directly related to market forces. This is because the emphasis in a TAP is on vocational skills training for self-employment.

- The choice of skills/trades offered should be determined by market factors - there need to be existing businesses based on these skills/trades in the market, so that apprenticeship placements can be found, but the market should not be saturated with such businesses, making it difficult for anyone in the skill/trade to earn a living income because of the competition.

- You need to know what the traditional practices for apprenticeship are in your area so that you do not undermine them through your intervention.

- You need to know about the trades that are significant in your area - if you are working in a predominantly rural area, you need to know about on-farm activities as well as rural small scale businesses and growth points.

Because of the surveying we had done, the ISTARN pilot programme knew:

- **About the manufacturing enterprises and service and repair enterprises in the informal sector in the area.**

- **The number of employees per enterprise.**

- **Which businesses were most likely to have larger numbers of staff.**

- **Which businesses had, at some stage, employed apprentices and/or were most likely to employ apprentices.**

- **The types of agreement that apprentices usually had with EOs about payment in cash or in food or shelter, and whether some apprentices were required to make a contribution to their training, or pay for their materials.**

- **The average length of training periods for apprentices in various trades.**

- **Whether or not EOs provided business training in the course of the apprenticeship.**

The ISTARN surveys excluded on-farm activities, as well as most home-based and many very rural, small scale businesses.

If you are concerned about including women in your programme, you wit! need specific information about trades/skills which are or could be "women-friendly".

Some questions for you to answer?

1. What are the most common manufacturing and service businesses in the informal sector in your area?

____
____
____

2. What do business or enterprise owners (EOs) offering these products or services earn in a month?

____
____

3. Are they one-person businesses, or do they employ others?

____
____

4. What businesses are less common, but do exist?

____
____

5. What do the owners of these businesses earn in a month, and do they employ or need staff to help them?

____
____
____

6. If you cannot answer any of these questions, what could you do to get the information you need?

____
____
____

SECTION 3: Different Starting Points

In Manual 1, we listed some of the different kinds of institutions/organisations which could decide to set up a TAP. They were:

- NGOs
- Technical Colleges
- Vocational Training Centres
- Private training Colleges.

You need to go back to the table in that manual to remind yourself about some of the issues and advantages and disadvantages that may apply to your particular kind of organisation or institution.

Some questions for you to answer?

1. What kind of an institution are you?

____

2. What are the potential strengths which you can build on in your TAP?

____
____
____

3. What are the potential weaknesses you will need to address if your TAP is to be a success?

____
____
____

When you get to this point in the manual, you will have done the preliminary work and/or thinking that will enable you to plan effectively for your TAP.

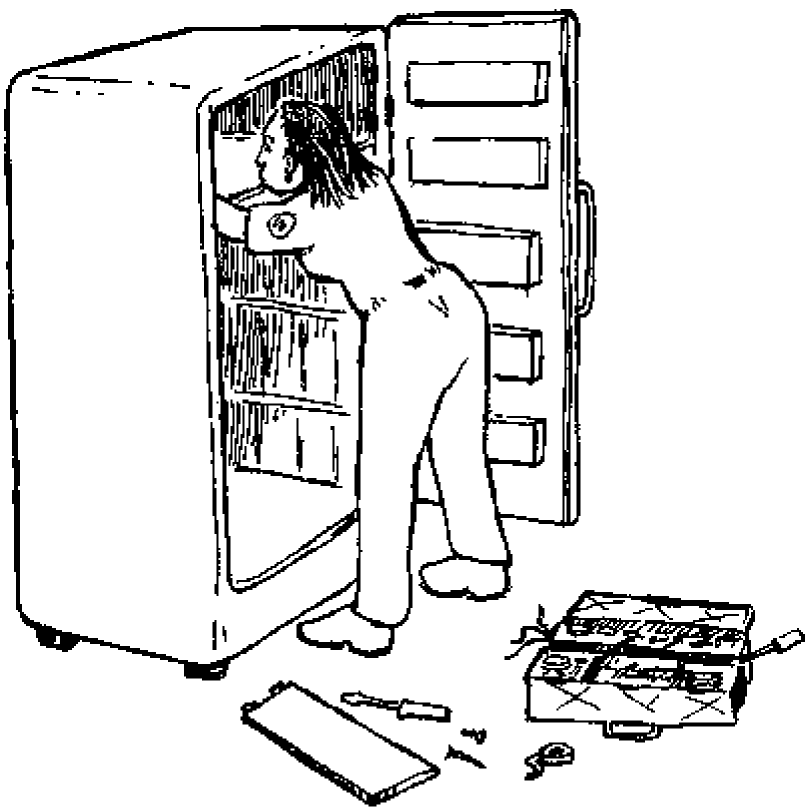

PART 2: THE PLANNING PHASE

Before you begin your detailed planning of the implementation of a TAP, there are certain things about which you need to be clear. Clarity will make the planning process easier, and will help to make implementation smoother.

SECTION 1: What are you trying to achieve?

This is the first question about which there needs to be clarity. A TAP is not just an alternative form of vocational skills training. It is an approach to vocational skills training which aims to ensure that graduates end up employed, preferably self-employed, probably in the informal sector.

A clear understanding of this purpose impacts at every level on the process of implementation. It impacts on:

- the kinds of formal skills training you offer;
- the kinds of participants you recruit and select, and how you go about selecting them;
- the sort of support package you offer;
- the kinds of information you collect for monitoring and evaluation.

The overall goal of the pilot ISTARN project was to increase employment opportunities in Masvingo Province, and the specific project purpose was defined as being to develop viable enterprises through a sustainable support system. The ISTARN TAP was meant to help the project to achieve this goal and purpose. It aimed to do this by leading to the creation of new employment opportunities through new, viable enterprises.

Because of this:

• The ISTARN TAP chose to offer skills which could be learned in a relatively short time, which were likely to be marketable, and for which there would not be a very big capital outlay in order for a graduate to start his/her own business.

• We tried to select "winners" - those most likely to succeed as entrepreneurs - and, after the first few intakes, made it a requirement of selection that the would-be apprentices must find placements before they could be considered for selection. Successfully doing this was seen as an indicator of independence and potential entrepreneurial aptitude. Although ISTARN takes wage employment as a successful outcome of the TAP, we assume (and results show this to be so) that most graduates will set up in business for themselves.

• The ISTARN TAP offers support services in the form of business training for alt apprentices, the option to access a tool hire-to-buy loan scheme, and access to business advisory services for those who go into their own businesses. All these services emphasise the aim of increasing employment opportunities through the creation of new, viable enterprises, Initially the pilot offered support in the form of access to subsistence grants and help in finding placements.

• The original apprenticeship agreements were between the enterprise owner (EO) and ISTARN. But these forms of support were dropped because they created in the apprentices a feeling of dependence on ISTARN, something the project wanted to avoid.

• ISTARN's monitoring records focus on how appropriate the formal training is to the actual workplace, and on what happens to graduates once their apprenticeship is complete. Monitoring and evaluation are related to what the project wants to achieve.

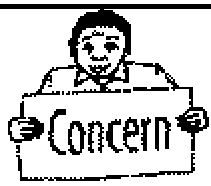

Our experience, and the evidence in international studies, is that ft is no use choosing people who expect, and want, to get jobs, when there are unlikely to be jobs for them when they graduate. A TAP has to assume that most graduates, if they want to use their skills to earn an income, will have to set up in business for themselves. This means that, if you want your TAP to be successful, you should select those who view self-employment favourably, and who have the potential to make a go of self-employment.

Your indicators (signposts) of success will be determined by what you are trying to achieve. If you are planning to create entrepreneurs, then your success will be measured by the number of graduates who go on to become successfully self-employed. Your evaluation of success will be done through tracer studies which track graduates and find out what they are doing. Because many small businesses collapse in the first few months after they are set up, you will need to track graduates over time.

ISTARN intends to track graduates for a three year period. This period has almost come to an end for the first graduates of the pilot programme, and results continue to be very encouraging.

Your interim indicators (the indicators that tell you you are making progress, even before you achieve full success) will also be determined by what you are trying to achieve. So, for example, because the TAP is a market-oriented process, the monitoring of apprentice placements and progress will be concerned with issues such as:

- Is the formal technical training appropriate to the workplace?

- Is the apprentice getting enough opportunity to practice the skill and to learn about how a business operates?

One of ISTARN's interim indicators of success was that the formal technical training should be appropriate to the workplace. In our monitoring process, we found that, while 90% of the dressmaking EOs in the first intake for the Manicaland replication TAP were very happy with the skills that the apprentices had learned in the initial technical training two weeks, those few who specialised in garments such as wedding dresses were very dissatisfied, because no "fancy" skills had been included in the training. This was picked up in the monitoring process and steps are being taken to remedy the problem.

If you are concerned about gender equity, and this is, and should be, a major concern for development projects, then you need to keep your monitoring and evaluation data in a way that differentiates between men and women apprentices. Your intake information needs to have a category to register gender, and so does your tracer information.

Some questions for you to answer?

1. What is the overall goal of your organisation or institution?

____
____
____

2. What do you hope that your TAP will achieve?

____
____
____
____

3. What will your indicators (signposts) of success be when you evaluate your TAP?

____
____
____
____

4. How will you collect the information you need to measure these indicators?

____
____
____
____

5. What interim indicators of success will you need to monitor in order to keep your TAP on track for long-term success?

____
____
____
____

6. How will you monitor these interim indicators?

____
____
____
____

SECTION 2: Are you clear on the basic principles that underpin a successful TAP?

The basic principles that underpin a successful TAP are:

The 10/90 Principle

This is the principle that, in an intervention such as a TAP, where success is so dependent on the mind-set of the participant, the implementing agency offers an opportunity which is 10% of the input required for success, but the other 90% of input required has to come from the participant. This means that the need for participant independence and entrepreneurial spirit must guide the planning and implementation process from the beginning.

ISTARN learned through experience that best practice in its TAP, in terms of the 10/90 Principle, excluded subsistence grants and any interference between the apprentice and the EO, but included the apprentices finding their own EOs, and being able to access loans to set themselves up in business.

Initially, ISTARN offered apprentices subsistence allowances, the apprentices paid nothing for training, and placements were negotiated for by ISTARN.

The Relevance Principle

This principle comes from the experience of training institutions which offer courses and programmes which are irrelevant to the needs of the market place. The result is that people go through lengthy and costly education and training processes, and then do not find jobs, and are not equipped for self-employment.

In Manual 1, we give the worrying statistics on unemployment for graduates of Zimbabwean technical colleges. We believe that an adaptation of the TAP might help to prepare these graduates for self-employment more appropriately.

Basic to a successful TAP is the need for relevance. This means that the training offered must be appropriate to the opportunities available in the market place. This should be reflected in:

- the selection of skills offered;
- the length and content of the formal technical training;
- the length and content of the apprenticeship placement;
- the support offered.

Skills offered should be marketable; the formal technical training should be as long and as complex as is necessary to provide sufficient skills to optimise the apprenticeship opportunity, but no longer; the apprenticeship placement should be as long as is needed to gain the necessary practical experience, the EO should be able to provide a busy and varied apprenticeship period, including exposure to business practice; the support offered should be aimed at enabling the graduate apprentice to run a viable business.

ISTARN, both in the pilot phase and in the replication phase, has departed from some of the accepted wisdoms of traditional apprenticeship programmes internationally, with regard to the relevance principle. So, for example:

- **we have selected some trades which require more than a six month apprenticeship (motor mechanics requires an 18 month apprenticeship);**

- **we have accepted that there is a possibility, even the probability, of a separate "journeyman" like interim employment period in some trades, before the graduate apprentice becomes self-employed.**

Both these departures have proved viable in the ISTARN experience. Nevertheless, the

principle of relevance remains a key principle for ISTARN, and requires ongoing monitoring and evaluation of the market, and adjustments to the programme where necessary.

The Sustainability Principle

This is the principle that holds that a TAP should be sustainable, which means that it must be cost effective and low cost, that there should be some form of cost retrieval from participants, and that it must have the desired or advertised impact (self-employment or employment), so that it continues to attract participants.

The issue of protective clothing and equipment was one in which ISTARN learned something about keeping costs low and processes appropriate or relevant. In the initial intake of welders, there were complaints from apprentices that the EOs did not provide protective clothing, especially masks to protect their eyes. We tried to organise a special deal for the EOs in protective clothing, but they weren't interested. In the end, the apprentices learned the low cost way to protect themselves from sparks from the welding - they turned their heads aside when they saw sparks coming! One of the reasons why informal sector businesses can keep going when their formal sector counterparts may fail is exactly because they are not constrained by laws and regulations which govern such matters as safety, minimum wages and formal qualifications which have been negotiated by organised labour.

The Equity Principle

This is the principle which holds that a programme of this nature ought to be open to as many people as possible, and that it should not exclude people on the grounds of unnecessarily high academic qualifications, on the grounds of their location (for example, in rural areas), or because they do not have enough money. There should be little or no bar to entry.

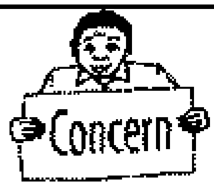

It is important to note that some of these principles may, at times, appear to be contradictory.

- **The 10/90 principle and the Sustainability Principle may be at odds with the equity principle. For example, the decision not to provide subsistence grants may exclude rural people who are unable to find free or cheap accommodation near a business nodal point where there are apprenticeship placements available. The decision to insist on full cost recovery from the participants for the formal training may exclude poorer people, particularly in more costly trades such as motor mechanics.**

- **The Relevance Principle may be at odds with the Equity Principle a person from a rural area with no electricity chooses to be apprenticed to an electrical appliance fixer.**

- **Circumstances may also lead to problems with the principles. So, for example, the fact that the unemployed are so educated in Zimbabwe, means that EOs can choose to take on better educated apprentices, even if nothing more than basic literacy is required, in contradiction to both the Equity and Relevance Principles.**

- **EOs who have experienced the ISTARN TAP, usually, prefer ISTARN-linked apprentices to those who might just come locking for apprenticeships trough the traditional practice. One of the reasons for this is that the initial technical training makes them more immediately productive and less likely to waste raw materials.**

These contradictions cannot be avoided. Each TAP will have to make its own decisions about which principles it compromises, depending on its priorities. If, for example, the inclusion of rural people is seen as a priority, then it may be necessary to provide a small subsistence grant or loan. If you feel poorer people should be able to access trades such as motor mechanics, you may need to investigate part-scholarships.

Some questions for you to answer?

1. Do you agree that the basic principles described here should underpin a TAP?

____

2. What will you do in your programme to stress the 10/90 principle?

____
____
____
____

3. How will you ensure that your programme meets the requirements of the principle of relevance?

____
____
____
____

4. What will sustainable mean in the context of your programme?

____
____
____
____

5. What concerns, if any, do you have about meeting the requirements of the principle of equity in your programme?

____
____
____
____

6. How do you think you will address these concerns?

____
____
____
____

SECTION 3: Do you have the infrastructure you need in place?

By infrastructure we do not mean physical infrastructure such as buildings. We mean the basic requirements that are needed to make a TAP work. This is a very important point because too often the focus is on buildings which may then stand empty because of the lack of a viable programme. In fact, a TAP can make use of the physical infrastructure (lecture rooms) of another organisation or institution.

The kind of infrastructure that has to be in place includes:

- a co-ordinating and administrative infrastructure (e.g. a telephone, people capable of providing a secretariat function);
- financial resources to finance start-up;
- transport;
- a network that links you into training and business support services;
- access to training facilities and appropriate trainers.

In its pilot phase, and in the replication phase, ISTARN was fortunate to have a secretariat, a physical base (at the Masvingo Technical College and then the Mutare Technical College), sufficient financial resources and access to training facilities and trainers (at the Colleges, but also through NGOs). It also had its own integrated set of business support services (including a tool hire-to-buy scheme and a small business advisory service), and good links into other business networks.

However, for some time, particularly the monitoring and evaluation work was hampered because there was only one dedicated staff member on the TAP, and he only had access to a vehicle 20% of the time.

Some questions for you to answer?

1. What coordinating and administrative facilities and personnel do you have?

____
____
____
____
____
____

2. What is the budget available to your TAP, and how is it divided in terms of line items?

____
____
____
____
____

3. Does your budget cover items such as transport? If not, how will this affect your ability to do monitoring and evaluation?

____
____
____

4. Do you feel that you are sufficiently networked, or do you still need to do more ground work in this area? If you do need to do more work, how will you do it?

____
____
____
____
____

5. What training facilities will you use, and who will supply the trainers?

____
____
____
____
____

SECTION 4: What are the key decisions you need to make?

By this stage, you should have done some surveying of the market, you should know something about the informal sector and the traditional apprenticeship practice in your area. You should also be clear about what you are trying to achieve, and how you will know if and when you have achieved it, and about the basic principles on which the success of your TAP will depend. You should have in place, or be confident you can put in place, the infrastructure necessary to a successful TAP.

Before you can develop a written plan for your TAP, there are certain key decisions that you need to make, and which you should now be ready to make.

In which skills are you going to offer training?

Your decision should be made based on the following:

- there is a market demand for the kind of services and/or goods the skills result in;
- there are sufficient willing and competent EOs in the trade in the geographical area in which you operate;
- training and training materials are available;
- the length of the technical training required is relatively short;
- the length of apprenticeship time required to make entrepreneurship possible is relatively short;
- capitalisation costs involved in setting up a business in the trade are low.

This is one of the decisions that requires that you give some thought to gender. One way to ensure that women are included in the programme is to select at least some

skills/trades that are traditionally "women friendly". This might mean including knitting and dressmaking, but the market for these skiffs may already be saturated. If that is the case, then you need to look at areas that are not traditionally seen as "women's trades or skills", and think about how to encourage women to participate in them. There are also whole areas opening up which have not necessarily been gender stereotyped. Radio and TV repairs is an example of this.

ISTARN had a women carpentry apprentice in the first intake of the pilot project in Masvingo. She is now self-employed and has done very well. In an Interview she said:

**"Some laughed at me and thought I wouldn't succeed.
They are now admiring."**

To date, ISTARN has offered skills training, in the context of its TAP, in the following areas:

- **carpentry**
- **metalwork (welding)**
- **motor mechanics**
- **dressmaking**
- **radio and TV repair**
- **refrigeration**
- **solar electric installation.**

We are intending to produce training manuals for the technical training in some of these areas.

Of the above, Refrigeration (at Z$ 16 196.18 as the cost from training through to actual self-employment, including the tools necessary to set up in business) and Motor Mechanics (Z$ 15 608.36) are the most costly. Carpentry (Z$ 8221.28) is the least costly. The cost (including the training costs and the tools to set up in business) for the others is:

- **Dressmaking Z$ 11 958.21**
- **Welding Z$ 11 706.94**
- **Radio and TV Repairs Z$ 13 019.80**
- **Solar Electric Installation Z$ 12 688.38.**

The fact that training and setting up costs for one trade may be more than those for another does not, in itself, tell us anything about cost effectiveness. This depends on other factors such as the success rate of apprentices in their own businesses after graduation. If, however, the cost of setting up in business is too great, this may prevent graduates from opting for self-employment. Our 1998 Tracer Study, of the first ISTARN intake, showed that those apprentices who had done carpentry (cost of basic tools Z$ 3 750) were more likely to be self-employed than those who had done welding (cost of basic tools Z$ 6 000).

What "package" are you going to offer?

By "package" here is meant the direct and indirect support offered by the programme to apprentices, both during their apprenticeships, and when they are ready to set up in business themselves.

At least one component of the support will be:

- short-term formal technical training.

It is this support which distinguishes a Traditional Apprenticeship Programme from the traditional practice.

If you do your preparatory work properly, you will also be offering

- an understanding of the market and, hence, a pre-selection of marketable skills/trades.

Among the other possibilities for direct support during the apprenticeship stage are:

- subsistence grants or loans;

- information about what makes for a useful placement;

- guidelines for the EO on what the apprentice should be taken through in the course of the apprenticeship;

- short-term business training.

Among the possibilities for support during the stage when the graduate apprentices are setting up their own businesses are:

- access to loans to participate in a tool hire-to-buy scheme;
- small business advisory services;
- access to other kinds of loans;
- access to cheap raw materials through bulk buying;
- access to marketing support.

These support services can either be offered directly by the implementing agency, or they can be accessed by referrals through the networks of which the implementing agency is part.

As we have already said, ISTARN offered a subsistence grant initially, but later dropped it in attempting to meet the challenges of sustainability and the 10/90 Principle. We did initially attempt to provide guidelines to EOs on what should be covered during the placement, but dropped this as we moved towards less interference in the traditional apprentice/EO relationship.

We continue to offer:

- **guidelines on what makes for a useful placement;**
- **short-term business training;**
- **access to loans to participate in a tool hire-to-buy scheme;**
- **small business advisory services.**

Through our involvement with Informal Sector Associations (ISAs) we can also sometimes help would-be entrepreneurs to access cheap raw materials, and, in Masvingo, we are exploring the process of accessing marketing opportunities.

ISTARN has been able to provide this range of support services because it is, itself, an integrated small and micro business support agency, rather than a training agency. In fact, it has not provided training directly itself, but has relied on partners such as NGOs and the technical colleges to do this.

We think the support services are very important in helping to build viable micro and small enterprises. But we also remind ourselves that 90% of successful businesses in the informal sector are run by people who had no support when they started out - what they had was the right attitude, and the most important thing a TAP is meant to do is to help produce the right attitude - the attitude of a winner.

Certification

You will need to decide what form of certification, if any, you will give to apprentices on graduation. You could give a certificate of attendance at the formal training. If you include some form of testing, then you could give a certificate of competence, but then you will need to think through very carefully what you do about those who do not "pass" the testing. Remember that, for this form of vocational skills training, what happens in the workplace is more important than what happens in the classroom.

ISTARN gives a certificate of attendance for the formal part of the training. Past apprentices have said that they find the certificate useful when they seek employment or set up in business because it shows that they have had formal training.

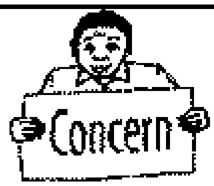

While there is a difference between trade testing and certification of competence, it is quite a gray area and many of those who support TAPs would be very against certification for fear that the emphasis on "passing" a "test" would override the concerns about keeping costs low, and the formal learning process to a minimum.

What time frames are you planning for?

Before you move on to draw up the written plan for your TAP, you need to think about time frames. The two key decisions here are:

- When are you planning to start (your first intake)?

  and

- How long are you going to plan for?

It is unrealistic to think that you can begin planning for a TAP one month, and advertise for your first intake the following month. Our experience suggests that the minimum lead up period is four months, and that six months is more likely. Keep this in mind when you decide on a starting date.

Finally, if you really want to test the potential for a successful TAP, then you probably need to think in terms of a three year pilot phase. This is how long it will take for you to be able to measure impact in a meaningful way.

We have just had the experience of starting up a TAP in the first ISTARN replication phase in Manicaland, Zimbabwe. Even with our experience in Masvingo, it took us four months to get it off the ground.

The initial pilot intake in Masvingo was in March 1996. We are only now, in 1999, reaching the point of being able to assess impact effectively.

Some questions for you to answer?

1. Which skills are you intending to offer in your TAP? I

____
____

2. Do they meet the criteria outlined in the Section above? If not why do you think they are the best skills for you to offer

____
____
____

3. What "package" are you going to offer?

4. Do you have the resources to offer this "package"?

5. If not, how will you access the resources you need?

6. What form of certification, if any, will you offer?

7. When do you plan to advertise for your first Intake

8, What do you have to do before then?

9. How long will you plan for in your initial plan?

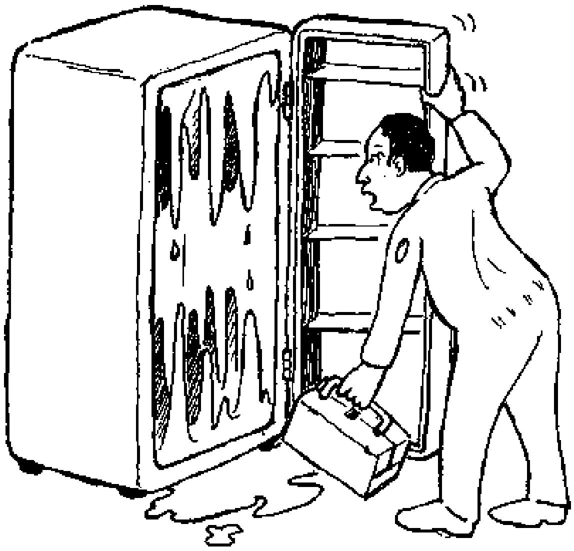

SECTION 5: Writing up your plan for implementation of a TAP

You should, by now, have done all your preliminary planning and thinking for your TAP and be ready to write up your implementation plan.

Your implementation plan should answer the following questions:

- What needs to be done?

- By when does it need to be done?

- Who will be involved in doing it?

- What resources are necessary to do it?

- What visible outputs will there be? (Examples of outputs could be: “participant workbooks prepared in each skill/trade”; “advertisements in all local newspapers and on all popular radio programmes”; “at least 30 participants selected”; “two week training sessions run in each skill”; “written progress reports completed on every apprentice”; etc.)

In Part 3 of this manual, we go through the implementation steps in detail. Here we list what your plan needs to cover:

- Preparation for the short-term formal technical training input;
- Recruitment, induction and selection;
- Running the initial short-term formal technical training sessions;
- Monitoring of placements;
- Follow-up short-term formal technical training sessions;
- Evaluation of effectiveness of short-term formal technical training;
- Re-planning for future intakes;
- Providing support services or access to support services;
- Longer-term evaluation - tracer studies;
- Review of TAP - decision whether or not to continue to offer it.

ISTARN has introduced the practice of holding “conventions” of TAP graduates once every year. TAP graduates are invited to a meeting where they can share experiences. This helps ISTARN with its monitoring and evaluation, and also helps to build networks among the graduates themselves.

On the next pages, instead of the usual questions for you to answer, we have provided a schedule for you to complete to help you in planning for the implementation of your TAP. Appendix 1 of this manual provides a format that you could use if you were asked to produce a Business Plan for your TAP.

**If you have worked through this manual systematically,
you should, by now, be ready to think through each step
of the implementation phase in more detail.**

An implementation planning format

PLANNING FOR YOUR TAP

Objective: To set up and run a Traditional Apprenticeship Programme		
What needs to be done?	**Starting Date**	**Target Date**

Questions for you to answer?

Who will be responsible?	What resources are needed?	What outputs will there be?

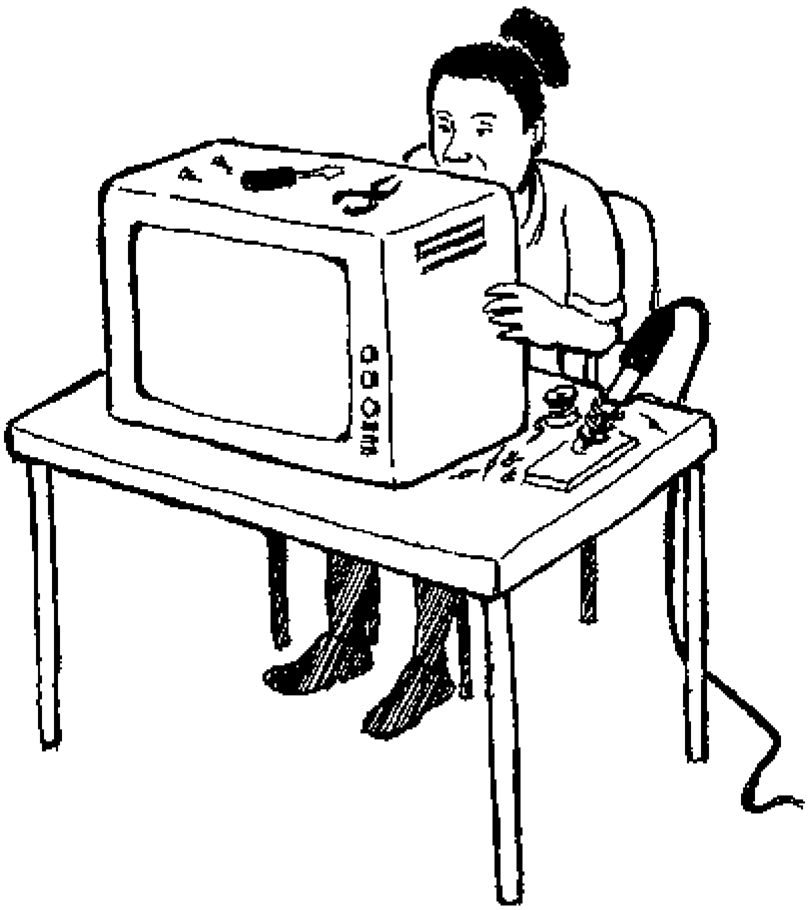

PART 3: IMPLEMENTATION

Implementation of a TAP can be divided into three phases, each of which affects different stakeholders in different ways. The phases are not rigid -in one programme there may be more overlap than in another. For example, for some Phase 1 might end with apprentice induction, while, for another, this might be the beginning of Phase 2. In this manual, we use the outline on the following page. We deal with each phase separately and in what seems to us to be a reasonable chronological order, although, in Phase 3, developments for each stakeholder group are likely to run parallel. As we work through the phases, and the steps within each phase, a reduced version of the plan will highlight for you where we are in the overall implementation process.

The following symbols are used to indicate the particular stakeholder groups that are involved at any particular point:


Implementing agency

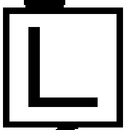
Apprentices


Enterprise Owners

After the outline table, you will find a diagram which demonstrates in a more dynamic way what the possible outcomes and routes for a TAP graduate might be.

Implementation and course of a traditional apprenticeship programme

PHASE	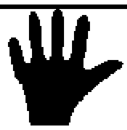	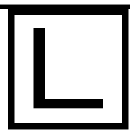	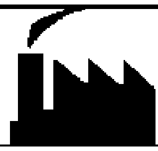
1 Preparatory	**Step 1** *Gearing up* for implementation		
	Step 2 *Recruitment* - advertising	**Step 2** *Recruitment* - finding placement	**Step 2** *Recruitment* - approached by apprentice
	Step 3 *Orientation* - presentation of programme	**Step 3** *Orientation* - decision on whether to participate	
	Step 4 *Selection* - applicants interviewed	**Step 4** *Selection* - interviewed	
2 Implementation	**Step 5** Conducting initial technical training	**Step 5** Participating in initial *technical training*	
		Step 6 *Placement* - practical	**Step 6** *Placement* - cheap

		skills development	labour, mutual learning
	Step 7 *Monitoring* - visits and feedback from and	**Step 7** *Monitoring* - feedback to	**Step 7** *Monitoring* - feedback to
	Step 8 Conducting *follow-up technical training* - includes *business training.* Usually, but not always, final formal training	**Step 8** Participating in follow-up *technical and business training* **i**	
3 **Post implementation**	**Step 9** *Evaluating training* for appropriateness	**Step 9** *Possible routes:* • Journeyman • Self-employed • Different employer • Trade testing	**Step 9** *Possible options:* • Keep on - i journeyman • Take on new apprentice • No apprentice
	Step 10 Providing ongoing *support* - for self-employment route	**Step 10** If self-employed - option of accessing *support*	
	Step 11 *Reviewing* and *replanning* of whole process 1		
	Step 12 Longer-term *evaluation* - tracer studies		

Diagram of possible routes for apprentice from Step 9 of the process

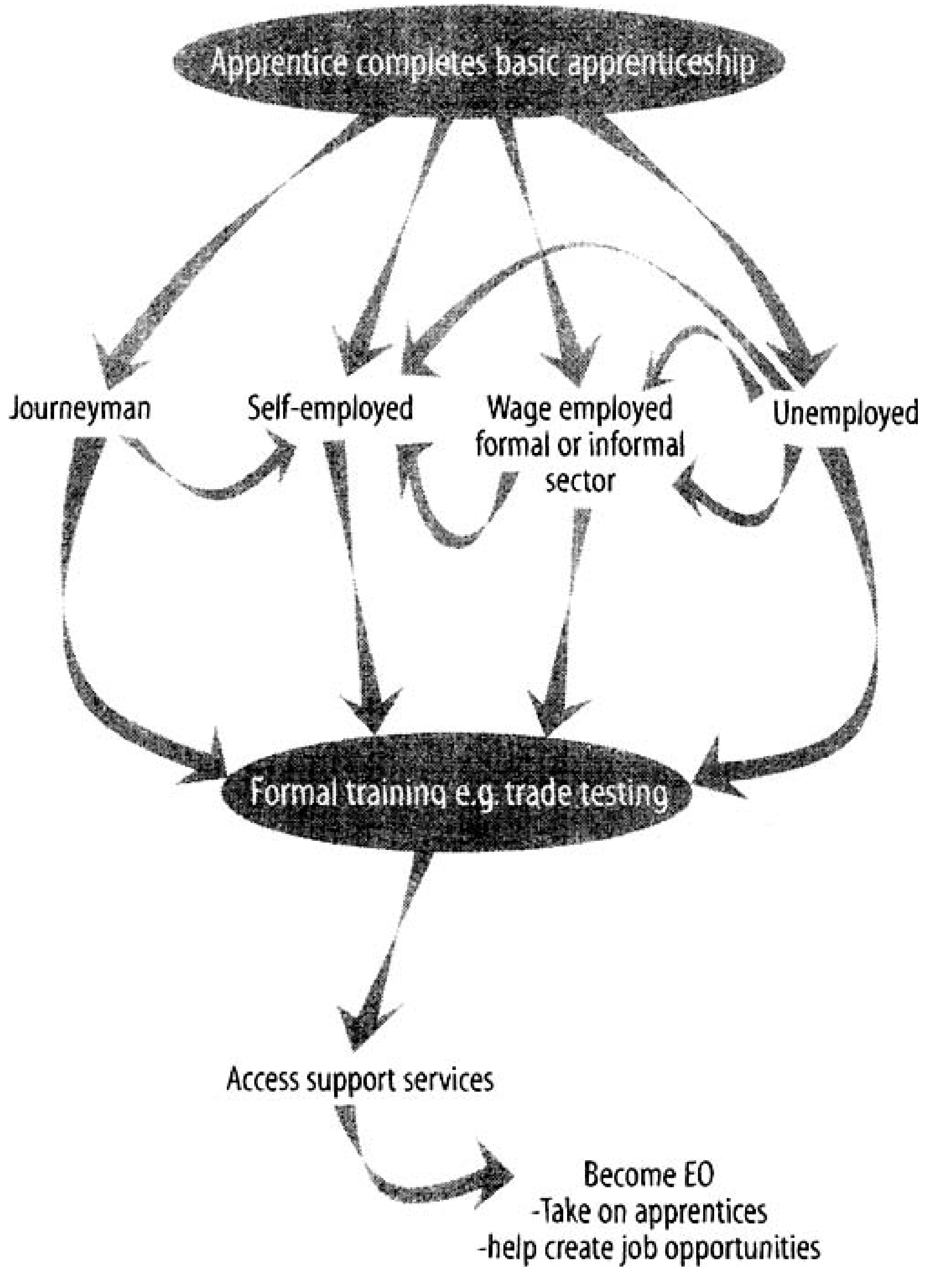

PHASE			
1 Preparatory	**Step 1** *Gearing up* for implementation		
	Step 2 *Recruitment* - advertising	**Step 2** *Recruitment* - finding placement	**Step 2** *Recruitment* - approached by apprentice
	Step 3 *Orientation* - presentation of programme	**Step 3** *Orientation* - decision on whether to participate	
	Step 4 *Selection* - applicants interviewed	**Step 4** *Selection* - interviewed	

PHASE 1: Preparatory Phase

STEP 1: Gearing up for implementation

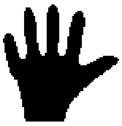

This step only involves the implementing agency. You have gone through the preliminary steps of finding out about the market and the informal sector in your area, and ensuring that your institution/organisation has the infrastructure and approach necessary to make a TAP succeed. You now **need to gear your institution up to cope with the challenges of this kind of training.**

You need to adapt your skills training approach and re-orient your trainers so that they make the adjustments necessary to train in this new context. If you are using outside trainers or training agencies, then you need to work with them to ensure that you get an appropriate product.

You need a training approach that:

- Identifies the core skills that apprentices need in order to carry out the trade competently, rather than in order to pass an external examination; given the short period of time available, the focus has to be on the essentials that will enable the apprentice to get the most benefit out of the practical experience at the place of attachment.

- Focuses on the use of basic, simple tools, rather than sophisticated equipment.

- Presents theory in a skills-oriented and practical way.

- Provides as many opportunities as possible for practical application.

And you need trainers who:

- Have some understanding of the realities of the workplace in the informal sector.

- Can make the adjustments necessary to the shorter training period, without short-cutting on the essential skills and safety precautions.

- Respect the apprentices and what they are trying to do.

If necessary, you should provide your trainers with training in:

- Self-employment programme planning;
- Training needs identification;
- Training methodologies;
- Assessment of trainees.

Trainers need to be gender sensitive, particularly where they are working with women who are apprentices in trades or skills in which women (...) not traditionally participated.

We did not always get the gearing up right. Here are two quotations from our trainees (both Dressmaking students) about the technical training:

'The lecturers were very patient and also quite understanding. They work very good with people who do not understand too much.'

'Technical training at college was not interesting because the machines were not enough for us all.'

During Step 1, your trainers should be:

- Designing a curriculum;
- Preparing materials.

The team as a whole should be:

- discussing the curriculum;
- giving feedback to the trainers.

You should also be thinking about any follow-up training that is going to be offered, including business training. There needs to be a curriculum for the business training as well. There are products available on the market for teaching of business and entrepreneurial skills.

During 1999 and 2000, ISTARN is planning to produce training manuals in some of the more popular skills training areas.

For business training, ISTARN is now using the Start Your Business package. There are a number of packages on the market and you do not need to "reinvent the wheel".

Some questions for you to answer?

1. What are the essential competencies for each area in which training is? going to be offered?

____
____
____
____

2. What equipment can apprentices in each of the areas realistically expect to find in the workplace?

____
____
____

____

3. What changes will you, or whoever is taking on the formal aspects of the training process, have to make to existing material?

____
____

4. What training materials will need to be produced?

____
____
____

5. What is the time schedule for the development of curricula, writing of materials, editing of materials and production of materials?

____
____
____

6. What business training package will we use?

____
____

7. Will we need to make any adjustments to it? If so, who will be responsible for this?

____

PHASE	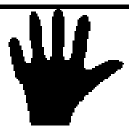	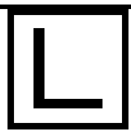	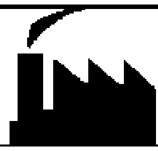
1 Preparatory	**Step 1** *Gearing up* for implementation		
	Step 2 *Recruitment* - advertising	**Step 2** *Recruitment* - finding placement	**Step 2** *Recruitment* - approached by apprentice
	Step 3 *Orientation* - presentation of programme	**Step 3** *Orientation* - decision on whether to participate	
	Step 4 *Selection* - applicants interviewed	**Step 4** *Selection* - interviewed	

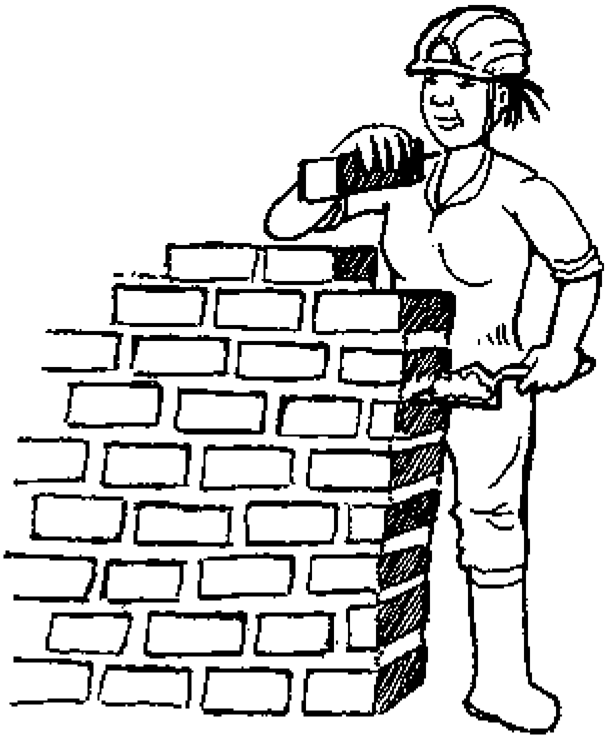

STEP 2: Recruitment

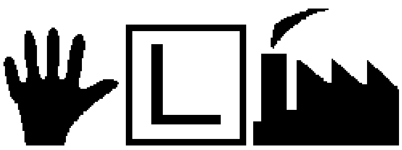

You have:

- decided what skills you will offer;
- decided what package you will offer;
- prepared the formal part of the training process.

What you need now are participants, and this involves **recruitment** - **letting potential participants know about the programme and how they can be part of it.**

Some of the questions to ask when you deal with recruitment are:

- How do we find the right kind of participants - those who are most likely to be "winners" and to make a success of self-employment?

- Where and how should we advertise our programme?

- What do we expect of would-be apprentices?

The recruitment process is your invitation to people to participate in the programme. Some things to keep in mind about this invitation:

- Your invitation to participate should make the 10/90 Principle clear. This means that your advertisements need to make it clear that participants will be expected to show independence and the ability to overcome obstacles.

- One way to reinforce this message, is to ask participants to find placements before they even come to the orientation meeting where you present the programme in detail. If you decide to go this route, then you should make available some guidelines for the selection of placements (see Appendix 2). Some programmes ask participants to find placements as their first task after the orientation meeting, but before selection.

In the ISTARN TAP we now expect would-be participants to come to the orientation meeting having already found placements for themselves. This is the key "obstacle" they are expected to overcome in order to be accepted for the programme. Apprentices in the more recent intakes indicated that it usually took two or three days to find a placement.

When it comes to advertising your programme, there are a number of options, including:

• Newspaper advertisements;

• Advertising on radio;

• Participating in Career Days at colleges and secondary schools;

• Putting advertising pamphlets on notice boards in public places (such as supermarkets and government offices);

• Networking with organisations which have access to particular groups in the community (such as youth or the unemployed or veterans).

Initially ISTARN recruited through partner organisations. In the replication phase, however, we are using newspaper advertisements and, for the first intake in Manicaland, this worked well.

If you are trying to encourage young women to participate in non-traditional skills, it is useful to get someone like a successful women carpenter *or* auto mechanic to present the programme at a Careers Day or workshop.

There is no one correct way to go about recruitment. You will need to select methods that suit you and your target group.

• Newspapers get to many people, and they provide details in writing so people can think about them, reread them and check them. But not everyone reads newspapers or notices advertisements in newspapers.

• Radio gets to the most people and to people in remote areas, but they may not catch the details and there is no way of "going back" or "replaying" the advertisement.

• Open Days and Careers Days are a good way to get to young people, and they create an opportunity to discuss the programme properly, but you can only get to a limited

number of people this way.

• Pamphlets in public places can catch people's attention, and they will have time to write down the details, but, again, they only get to some people.

• Networking with other organisations is helpful in reaching specific target groups, but, used on its own, limits the number of people who get to hear about the programme.

When you recruit, remember to:

• Advertise in good time (about two months before the proposed starting date) to give people time to make enquiries about the programme and to think about it.

• Choose advertising routes that will get to marginalised groups such as the unemployed or rural people.

• Check that your advertising is clear about:

- who should apply
- by when they should apply
- what is expected of applicants
- the cost
- what a Traditional Apprenticeship Programme is.

Make sure that your advertising (whatever means you choose) particularly encourages women to participate.

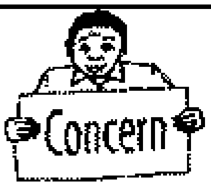

We have already mentioned that there are some tensions around the Equity Principle. When, for example, you target rural people in your advertising, keep in mind the problem they may have finding accommodation near their placements and discuss the Issues around some form of subsistence loan with particular reference to their needs. Decide how you are going to reconcile the Equity Principle with the 10/90 Principle.

Some questions for you to answer?

1. What will you do to recruit "winners"? How will they have to prove I themselves?

____
____
____
____

2. How will you encourage women to participate in your programme?

3. Which advertising options do you think will work best with those you are targeting for your programme? Why are these the best?

4. What do you need to prepare for your recruitment campaign?

PHASE	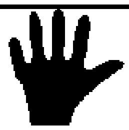	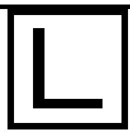	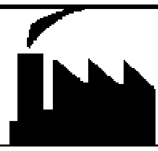
1 Preparatory	**Step 1** *Gearing up* for implementation		
	Step 2 *Recruitment* - advertising	**Step 2** *Recruitment* - finding placement	**Step 2** *Recruitment* - approached by apprentice
	Step 3 *Orientation* - presentation of programme	**Step 3** *Orientation* - decision on whether to participate	
	Step 4 *Selection* - applicants interviewed	**Step 4** *Selection* - interviewed	

STEP 3: Orientation

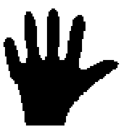 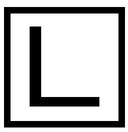

The orientation step is a very important one - it is here that would-be apprentices really come to grips with what a TAP is about. For many of your recruits, it is the first opportunity they will have to hear about the programme face to face and to ask you questions about it. Usually it will take the form of a meeting, organised by the implementing organisation. At this meeting, the TAP team will:

• Explain the programme;

• Emphasise the need for independence and an entrepreneurial approach;

• Emphasise that the programme is intended to lead to self-employment;

• Explain what will be expected of apprentices;

• Explain what is being offered to apprentices, both during the programme, and in support services afterwards;

• Answer any questions the applicants may have.

We have found that a few people are unhappy with the idea of such a **short period of formal training and decide, at this point, not to go ahead. We have also found that it is very important to be clear about expectations, so that the apprentices know exactly what they are getting into. With our first intake in Masvingo, we were not clear enough, and the result was some dissatisfied and unhappy apprentices who complained a lot and expected us to sort out their problems. As one ISTARN staff member said:**

'People convinced themselves of more than we offered.'

At ISTARN, we now hold the orientation meeting after would-be apprentices have already found placements. This means that those who come to the meeting are very serious about the programme, and we can move directly into selection. But it also means that, occasionally, people go to the trouble of finding placements and then discover that they do not want to be part of the Programme.

The meeting could be held before the would-be apprentices go out to look for placements, so that those who do already know exactly what the programme is about and how it works. There would then be a delay before the selection process.

Some questions for you to answer?

1. When will you hold your orientation meeting - before would-be apprentices find their placements, or after? Why do you think this is a better time?

2. Who will do the main presentation at the orientation meeting?

3. What points must be presented?

4. What questions do you think might be asked, and how will you answer them?

PHASE	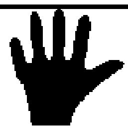	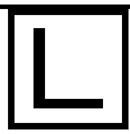	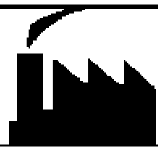
1 Preparatory	**Step 1** *Gearing up* for implementation		
	Step 2 *Recruitment* - advertising	**Step 2** *Recruitment* - finding placement	**Step 2** *Recruitment* - approached by apprentice
	Step 3 *Orientation* - presentation of programme	**Step 3** *Orientation* - decision on whether to participate	
	Step 4 *Selection* - applicants interviewed	**Step 4** *Selection* - interviewed	

STEP 4: Selection

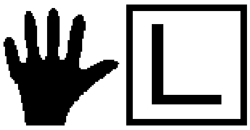

Selection is the process **by which you decide who, out of the applicants, will be accepted on to the programme.** As with recruitment, there is no one “right” way to do it, but selection must be related to what you are trying to achieve through the programme. If you are trying to create opportunities for people to become self-employed, then you need to select people who want to become self-employed and who are likely to make a success of it. But you may also have other criteria for selection - you may have decided that you want to give young people particular access to the programme, or that you prefer people who are in “stable” personal circumstances because they are more likely to complete the programme.

We have already talked about the “obstacles” or “tests” that could be used to help in the process of selecting for entrepreneurial aptitude.

The Case Study on the ISTARN TAP quotes a Botswanan programme which expects would-be participants to run mini-businesses over a weekend, producing and/or selling commodities to real customers, using, if necessary, a small loan payable at 30% interest. In other programmes, the implementing agencies have looked for the ability to articulate a rudimentary business plan, to identify finance for the proposed enterprise, or to do some kind of market feasibility plan.

The selection interview is another opportunity to assess the potential of an applicant for running his or her own business, as well as to “score” them on other factors.

In the selection interview, you want to find out:

- the persona! details of the applicants
- why they want to be traditional apprentices
- what their expectations are
- what their personal circumstances are
- why they have chosen a particular trade
- what they hope to do once they graduate
- whether they are likely to cope with the apprenticeship
- whether or not they are independent-minded and problem-solving
- how likely they are to be successful entrepreneurs.

In Appendix 3, we have given an example of a selection interview schedule. You will see that it is prepared in such a way that each applicant can be "scored" for suitability for a TAP. Rather than one person interviewing alone, interview in pairs or teams, compare scores, and agree on them, to give each applicant a fair chance. Those with the highest "scores" are likely to the most appropriate selection for your TAP. The method is not "scientific", but it works well.

Once someone has been selected, the information from the schedule can become the basis of later comparison with tracer studies so that you can assess how successful your selection techniques have been. Did those who scored well on entrepreneurial skills in the selection process make good entrepreneurs?

The successful applicants should also be asked to complete a Personal Data Form (see Appendix 4). Kept in alphabetical order, these forms provide a ready-access set of information on each participant in the programme when it comes to monitoring and evaluation.

The careful selection process followed by ISTARN is seen as important, because "wrong" selection leads to a waste of resources and the discrediting of the programme. However, it is worth noting that selection in the traditional practice is much more ad hoc. Apprentices seek out EOs who select those whom they think will be useful or appropriate to them and whom they think they can trust. One of the EOs in the ISTARN programme said:

'From my experience, you can see people who have direction and people who don't.'

During the selection process, it is very important to keep in mind the issue of gender and other equity issues. Sometimes you may decide to accept a women or a person from a rural are, rather than a man or an urban-based person who may have scored higher, because you want to ensure that there is a reasonable ratio of women on the programme or that rural or other marginalised people are represented. This may mean that you have to provide more support to ensure success, but compromises such as this recognise that certain groups have been historically disadvantaged to a greater degree than others, and so need more encouragement and support in order to "level the playing fields".

Some questions for you to answer?

1. What criteria will you use for selection?

____
____
____
____

2. How will you "test" for entrepreneurial aptitude?

____
____
____

3. What questions will you ask in the selection interview, and how will you “score” them?

4. Will you have “quotas” for marginalised groups such as women and rural people?

5. Who wilt be on the selection team?

6. How will the selection team work together? Will everyone interview, or will you interview in pairs?

7. What information will you include on the Personal Data Form?

At this point, all the necessary elements
should be in place in order to begin the implementation
of the training process.

PHASE 2: Implementation Phase

PHASE	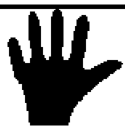	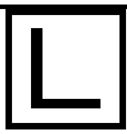	
2 Implementation	**Step 5** Conducting initial *technical training*	**Step 5** Participating in initial *technical training*	
		Step 6 *Placement* - practical skills development	**Step 6** *Placement* - cheap labour, mutual learning
	Step 7 *Monitoring* - visits and feedback from  and 	**Step 7** *Monitoring* - feedback to 	**Step 7** *Monitoring* - feedback to 

PHASE	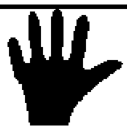	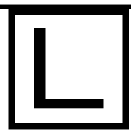	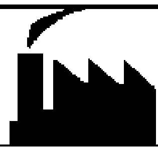
	Step 8 Conducting *follow-up technical training* - includes *business training.* Usually, but not always, final formal training	**Step 8** Participating in follow-up *technical and business*	

STEP 5: Conducting initial technical training

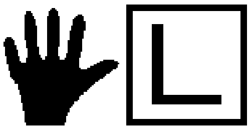

At this point, you have recruited and selected your intake, and they are ready to begin their training. Either you or your training partners need to present the specially prepared, relevant technical training that is the particular value that a TAP adds to the traditional practice in terms of vocational or skills training.

In order to run the technical training, you need:

• An appropriate venue;
• A curriculum;
• Training tools;
• Trainers;
• Training materials.

At this stage, you should have planned so that all these elements are in place.

It is important to remember that this is likely to be the apprentices first introduction to the trade/skill, and you want it to be as positive as possible. You also want it to be as well-organised and efficient as possible. The time (usually about two weeks) is very short, and none of it should be wasted. This is also an opportunity to model good working habits for apprentices, some of whom may never have worked before. This means being strict about attendance, about starting and finishing times, about work habits, and about attitudes to work. The apprentices will, hopefully, take these attitudes with them into their placements, and so enhance the credibility of the Programme.

The trainers will need to keep records of attendance, and, even if you are only giving certificates of attendance, and not of competence, they should be able to provide the apprentices with feedback on their progress, and their strengths and weaknesses. The training is likely to be in a competency form (with a focus on enabling the apprentices to be able to do certain things competently). Training in a competency format has a number of advantages:

• it is practical;

• it forces trainers to focus on essentials and to be rigorous in what they teach and how they teach it;

• it provides instant feedback on whether the training is working (as measured by the degree of competency participants acquire in skills);

• it lends itself to a “recognition of prior learning” assessment, should participants want to move into a formal training track.

We have already noted that ISTARN is hoping to produce manuals for certain types of training in the near future. It has decided to do this because the availability of existing material that is appropriate is limited. Sometimes, the lack of training material leads to the cancellation of the option. On one occasion at ISTARN, Masvingo, there were four applicants who had found placements as leather workers, but the option was cancelled because there was no formal training available. In the medium-term, it would be useful to build up a range of materials which can be used.

We have talked about the issues related to certification for the technical training. To recap:

- **A Certificate of Attendance provides proof of the apprentice having had formal training, but not of his or her competence.**

- **A Certificate of Competency will help some people to get jobs or generate business, but is it appropriate in a programme where the main part of the learning process is supposed to take place in the workplace?**

- **A focus on certification may lead to more expensive training that is not necessary or relevant to the actual work that will be done by the apprentices.**

In the end, it may be best to leave the decision about whether or not to go for trade testing (or other forms of competency testing) to the apprentice, and to ensure that the technical training provided covers the necessary basics well.

One of the issues that ISTARN confronted at this stage was the need for an indemnity form for indemnifying ISTARN in case of injury during training. At the moment, ISTARN is negotiating with the Zimbabwe Development Fund to get apprentices covered under the national insurance scheme which is administered by government and covers all formal students in tertiary institutions. The students themselves do not contribute anything to the scheme.

We have included a format for an indemnity form as Appendix 7, but it is best to get it checked by a lawyer to make sure that you are covered.

Some questions for you to answer?

1. Are you satisfied with the materials that have been produced for the technical I training?

____

2. Have all necessary arrangements been made for the venue and equipment?

____

3. Are you satisfied that you will cover all the essentials of the introduction to the trade/skill?

____

4. What provision have you made for Keeping track of attendance?

____

5. Are you sure that the planned curriculum is practical enough?

____

6. Are you sure the planned curriculum provides the apprentices with enough theory?

____

7. Do you think you need an indemnity form and, if so, what provision have you made for developing one and getting it approved fry your lawyer?

____
____

8. What still needs to be done?

____

PHASE	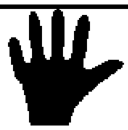	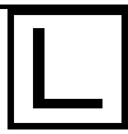	
2 Implementation	**Step 5** Conducting initial *technical training*	**Step 5** Participating in initial *technical training*	
		Step 6 *Placement* - practical skills development	**Step 6** *Placement* - cheap labour, mutual learning
	Step 7 *Monitoring* - visits and feedback from and	**Step 7** *Monitoring* -feedback to	**Step 7** *Monitoring* -feedback to
	Step 8 Conducting *follow-up technical training* - includes *business training.* Usually, but not always, final formal training	**Step 8** Participating in follow-up *technical and business training*	

STEP 6: The placement

This step involves the development of the relationship between the Enterprise Owner and the apprentice and, ideally, a mutual transfer of skills. While the apprentice is the main beneficiary, there is the possibility of some innovative technical practices, acquired by the apprentice in the technical training period, being transferred into the workplace as well.

It is during this time that the apprentice will really be able to tell whether or not the placement is suitable for someone wanting to learn skills (both technical and business) which will enable him/her to become self-employed at a later date. In one programme (not ISTARN), the agency running the programme had tested the would-be masters (EOs) for technical competency, and had helped them to design training programmes for their apprentices. This has implications for cost and for the level of “interference” in the traditional practice.

Within the ISTARN context, there have been suggestions that the training partners offer courses to the EOs to upgrade their skills, but EOs would have to pay for this training and we are not sure that they would be prepared to do so.

Initially, ISTARN offered the following services to the Enterprise Owner in exchange for taking on an apprentice for attachment:

- **Free business training.**
- **Free business advisory/consultancy services.**

The Enterprise Owner was also encouraged to join an Informal Sector Association (ISA) so that s/he could benefit from other services offered by ISTARN such as cheap raw materials from the ISA warehouses.

Now ISTARN offers nothing in exchange for the Enterprise Owner taking on an apprentice, except that, if the EO wants business training and business consultancy services, these can be provided at a fee.

The reason for the change was that this practice of giving free business training had the potential to commercialise TAP placements and this would have been a serious interference with the existing practice.

Interviews have shown that some of the EOs approach the skills transfer process with far greater attention than others. They see the process as a fair exchange:

‘I get labour - they grow and develop.’

Some of the EOs have developed quite structured learning practices:

‘I sit down with them once a week and we talk about what they have learned during the week.’

We have also found that the learning opportunities differ in different enterprises, even within the same trade. So, for example, one carpenter may be a craftsman who designs and makes customised pieces. Another may mass produce school furniture. He probably does no special designs and does not even use plans, but he runs a successful business. Clearly the learning opportunities in the two environments are very different.

Given the way in which would-be apprentices find placements, there is a possibility that, once the apprentice is actually in the workplace, what seemed as if it would be an appropriate placement turns out not to be so. The intention should be for the apprentice to make the best of the situation, but sometimes the situation may be unsalvageable and the best option may be for the apprentice to find an alternative place. This might be because the volume of work is just not sufficient for the apprentice to get practical experience, or the EO may simply refuse to let the apprentice do anything that involves using his/her tools, or may not make any effort to transfer skills. This is an area in which the implementing agency can provide support to the apprentice, helping him/her to work out whether or not a change is really needed.

In the ISTARN TAP, we do encourage apprentices to seek alternative placements if they are not developing sufficiently and acquiring skills. However, we have found that this has a negative effect on negotiations for attachments with future apprentices. On the other hand, it also sometimes has positive effects because it serves as a challenge to the EO who then takes stock of how he/she is operating the business and identifies what is lacking in the environment for the apprentice. This can lead to an improvement in the practices in the workplace. So, for example, welding EOs who only use arc welding, and who lose apprentices to neighbouring EOs who offer both arc and gas welding, then improve their equipment to include both.

There are no hard and fast rules about the economic relationship between the EO and the apprentice, and many variations are found, both in the traditional practice and in programmes such as a TAP. Some EOs expect to be paid by the apprentices for the attachment, at least until the apprentice is productive. Others offer food and/or lodging in return for cheap labour. Some EOs expect the apprentices to provide their own tools and raw materials (as, for example, components in the TV and radio repair businesses). It is probably best for the implementing agency to interfere as little as possible in this and to leave it to the EO and the apprentice to sort out an arrangement that suits them.

In a survey commissioned by ISTARN, it was found that it was more common for the EO to make a material contribution to the training than for the apprentice, and that the majority of the contributions were in the form of cash, food and shelter. Some of those being trained had to make a **financial contribution to the training, or they had to pay for materials or stay on for a time after training was complete.**

Some questions for you to answer?

1. Do you know what the most common practices are for governing the relationship between the apprentice and the EO in the traditional practice in your area? Make some notes about what you do know.

____
____
____
____

2. Have you thought through how you will deal with apprentice complaints about their EOs? What sort of guidelines will you follow in responding to complaints?

____
____
____
____

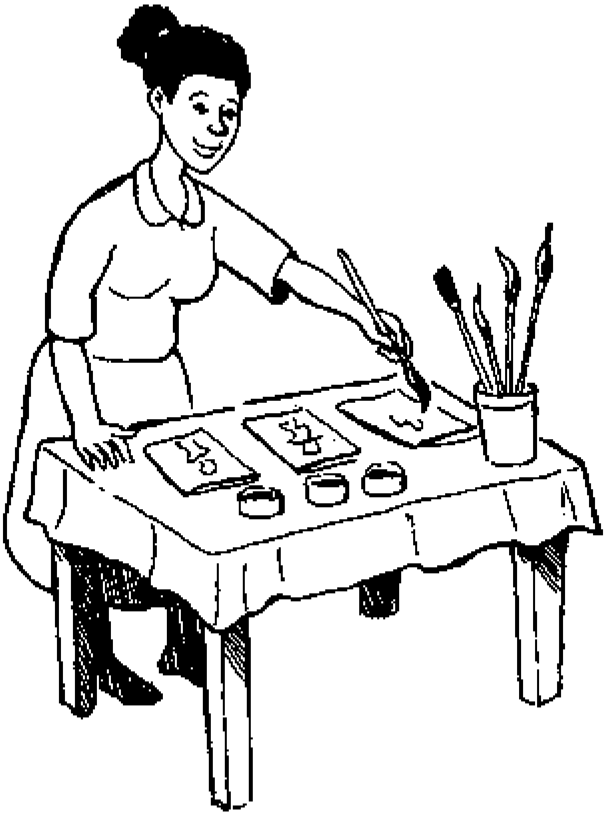

PHASE			
2 Implementation	**Step 5** Conducting initial *technical training*	**Step 5** Participating in initial *technical training*	
		Step 6 *Placement* - practical skills development	**Step 6** *Placement* - cheap labour, mutual learning
	Step 7 *Monitoring* - visits and feedback from and	**Step 7** *Monitoring* - feedback to	**Step 7** *Monitoring* -feedback to
	Step 8 Conducting *follow-up technical training* - includes *business training.* Usually, but not always, final formal training	**Step 8** Participating in follow-up *technical and business training*	

STEP 7: Monitoring of placements

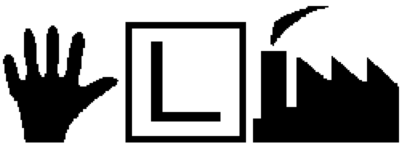

Monitoring of placements is a step which can, potentially, benefit all three of the key stakeholders in the TAP.

For **the implementing agency,** it is an opportunity to get feedback on whether the technical training aspect of the programme is, in fact, useful, and to identify any problems that may be making the placement problematic. Depending *on* resources (human and financial), the implementing agency probably needs to visit each workplace once in two weeks, or once a month. The EO is asked to complete a monthly Apprentice Appraisal Form (See Appendix 5 for an example) which the fieldworker from the implementing agency then collects or checks. This gives some indication to the implementing agency that the EO is viewing the apprenticeship as a training period, as well as some indication about how responsibly the apprentice is using the opportunity. The monitoring visits also involve verbal discussions with both the EO and the apprentice, and this is an opportunity to identify problems, either in the placement or in the technical training.

For **the apprentice,** it is an opportunity to discuss the placement with the implementing agency fieldworker, particularly if there are any problems. Once they are in their placements, the apprentices may be quite isolated (particularly if they are the only apprentice in the enterprise), and the fieldworker can provide valuable feedback on whether problems s/he is experiencing are common, require more determination from the apprentice, or are serious enough to require a change of placement.

For **the EO**, it is an opportunity to give feedback about whether or not the programme is meeting his/her needs and what would make it better, and also to make inquires about other services the implementing agency may offer or know about that could be useful to the EO. The fieldworkers may also be able to help with ideas to improve the skills transfer process.

Sometimes the fieldworker may be called upon to play a mediating role between the EO and the apprentice, but here, again, the best rule is to intervene as little as possible and to encourage the two main actors to sort things out between themselves.

We have found the monitoring process useful. Both apprentices and EOs are positive about it, **and it has, at times, given us valuable feedback which we have fed back into the programme. One example of this is mentioned above - the complaints from EOs doing fancy dressmaking that only basic skills were included in the dressmaking technical training. Initially, the visits tended to invite complaints from the apprentices, but this has been less the case since the 10/90 Principle has been more firmly explained and implemented.**

The literature on TAPs suggests that women, particularly those in non-traditional trades, may need more support than men and the monitoring process provides an opportunity to give this additional support, and to identify any special problems that may be making the placement difficult for the apprentice - anything from sexual harassment to problems with childcare or negative EO attitudes.

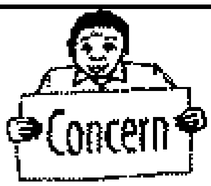

Often the monitoring process is not recorded anywhere except in the fieldworker's head. It is important that fieldworkers write reports which encompass the experience from the perspectives of the implementing agency, the EO and the apprentice. This provides a record of learnings which cart be used in the future - even if the fieldworker leaves the agency or gets run over by a bus!

Some questions for you to answer?

1. What form will your monitoring of placements take?

____
____
____

2. Who will do the monitoring?

____

3. Have you prepared an Appraisal Form? If not* who will do so, by when?

____

4. Now will feedback from the monitoring process be recorded for future reference and use?

____
____
____

5. How will feedback from the monitoring process be fed into the process of planning generally, and planning for the next technical training input specifically?

____
____

6. What will be done to provide particular support for women during the monitoring process?

____
____
____

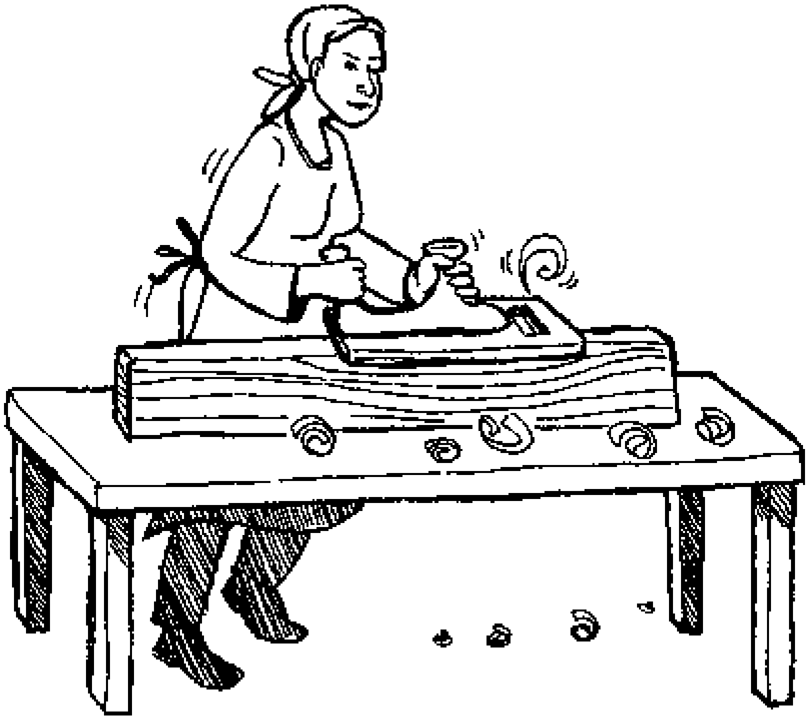

PHASE	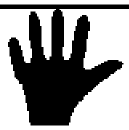	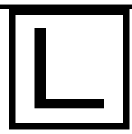	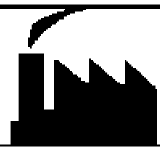
2 Implementation	**Step 5** Conducting initial *technical training*	**Step 5** Participating in initial *technical training*	
		Step 6 *Placement* - practical skills development	**Step 6** *Placement* - cheap labour, mutual learning
	Step 7 *Monitoring* - visits and feedback from  and 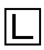	**Step 7** *Monitoring* - feedback to 	**Step 7** *Monitoring* -feedback to 
	Step 8 Conducting *follow-up technical training* - includes *business training.* Usually, but not always, final formal training	**Step 8** Participating in follow-up *technical and business training*	

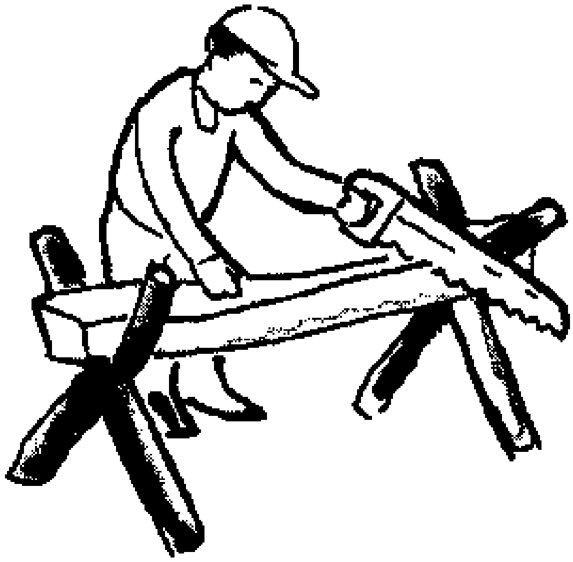

STEP 8: Follow-up technical training and evaluation

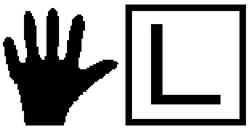

In most cases, this will be *the final technical input, and will also provide an opportunity for the trainers to evaluate the development of the apprentices' technical skills. In the ISTARN programme, this is now also the time when business training is specifically given.*

In some trades, it may be necessary to offer more than the two formal technical inputs, over a three to six month period. This will only be for those trades which are more technically complex and which are, therefore, not likely to be included in a TAP in most cases. One exception is motor mechanics, which does require more formal technical training sessions (over what is likely to be an 18 month apprenticeship), and which has been a successful TAP area for ISTARN.

For most trades, this training will be the final input of the TAP process, and will probably be another two week session. With regard to the technical training, this is an opportunity for the trainers to assess how much has been learned through the practical experience in the workplace, and to provide any additional training required to make the apprentices competent in the field. Ideally, it will be a rounding off of skills, rather than teaching of totally new skills. The training time also provides an opportunity for the apprentices to ask questions about the technical process which their EOs have been unable to answer. If the monitoring process has worked well, the fieldworkers will have fed back to the trainers any comments about gaps in the initial training and, if necessary, this is an opportunity to address them. Again, the emphasis should be on what is relevant and necessary to enable the apprentice, soon to graduate, to provide a complete service or product at the relevant level.

We have not always got this right, as these quotations from our trainees indicate:

'I did not enjoy the theory lessons because the lecturers did not explain some things. They assume we know it from our attachment place, while we do not. At the attachment place they also assume you know it from college.'

'It is like our lecturers are hammering on lighter things that could not help us because we expected them to forward us other than keeping on doing things we did the previous time.'

We believe that this final training period is the right opportunity to introduce business skills as a formal package. By now the apprentices should have been exposed to business practices in the workplace. They should be familiar with the practices related to getting raw materials and to negotiating with customers. They should have a sense of how a business works, of the importance of cash flow and, if they have been very fortunate in their EOs, to the importance of financial record keeping. The business skills programme provided at this point serves to formalise what they have learned and to fill in the gaps of what they have not learned.

ISTARN used to offer the Township Management of Business Activities (TMBA) training package, but we are now using the Start Your Business (SYB) package.

Some questions for you to answer?

1. What will be covered on the technical side during the follow-up technical i training?

____
____
____

2. How will apprentices be assessed for practical skills and competence?

____
____
____

3. How wilt you build in the opportunity for the apprentices to ask questions and get answers on technical areas they are unsure about?

____
____
____

4. What business skills framing will you provide?

____
____
____

The training process has now been completed.

This does not necessarily mean that the learning process has been completed, and, in fact, it will probably be carried forward in some way in all the stakeholder groups.

PHASE			
3 Post implementation	**Step 9** *Evaluating training* for appropriateness	**Step 9** *Possible routes:* • Journeyman • Self-employed • Different employer • Trade testing	**Step 9** *Possible options:* • Keep on -journeyman • Take on new apprentice • No apprentice
	Step 10 Providing ongoing *support* - for self-employment route	**Step 10** If self-employed - option of accessing *support*	
	Step 11 *Reviewing* and *replanning* of whole process		
	Step 12 Longer-term *evaluation* -tracer studies		

PHASE 3: Post Implementation

In the post-implementation phase, each stakeholder group follows its own track so that the process becomes parallel rather than integrated. The following steps are, at times, therefore, presented separately for each stakeholder group.

STEP 9

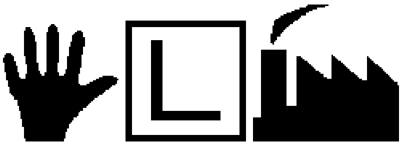

There is an immediate step after the implementation for all three stakeholder groups.

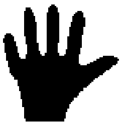

Evaluating the training for appropraiteness

For the implementing agency, this is the point at which there needs to be a *review of the training process.* This should have already begun through the monitoring process. What is required now is a full evaluation in which the fieldworkers and trainers together look at the input that has been received from the apprentices and the EOs, and at the observations made by the trainers in the formal training sessions. The process should:

- collect all the feedback received on the formal training;
- identify problem areas;
- plan how to avoid them in the future.

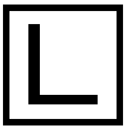

Selection of possible routes to follow for the apprentices

At this stage, the apprentice may *choose one of three options:*

- a Journeyman position with the EO where s/he has trained
- a Journeyman position with another EO
- Self-employment.

When we use the term “journeyman” we are referring to someone who has completed his/her apprenticeship, and can function as a skilled and fully productive employee.

The other possibility, and obviously not a desirable one, is that none of these options will be open to the graduate apprentice, and that s/he will be unemployed.

The tracer study of the first two ISTARN, Masvingo intakes of apprentices (all welders and carpenters), done in 1998 reached 88% of the graduate apprentices. Of these:

- **56.9% were self-employed**
- **29.2% were employed**
- **13.8% were unemployed.**

International literature on traditional apprenticeship-type programmes sees one third of graduates self-employed after six months as success.

The other thing that can happen at this stage, in addition to any one of the listed options, including unemployment, is that the graduate apprentice can decide to try for trade testing in his/her particular trade (where trade testing is offered). The pros and cons of this have been discussed above. It does provide a way for the graduate moving from informal training, to a form of formal accreditation. The implementing agency can provide support here by finding out what is involved in the trade testing and informing graduates. Any costs incurred, however, should be paid by the graduate apprentice.

Some of ISTARN's motor mechanic apprentices have gone the route of first level trade testing and have generally done well in the test.

Possible options for the enterprise owner

Post implementation, the EO can opt to:

- keep on the apprentice as a journeyman;
- take on a new apprentice;
- decide not to have an apprentice or a journeyman.

There is always the possibility that the EO will decide to seek further help in developing his/her business from the implementing agency, and you should be able to provide the support or to refer the EO appropriately. If things work out as the best possible scenario, the EO will also have gained from the experience and will have a more productive business, with the possibility of taking on more apprentices. However, after this, the EOs involvement in the TAP formally ceases, unless s/he decides to take on more TAP apprentices.

Some questions for you to answer?

1. How will you go about evaluating the technical training for appropriateness?

2. What will your approach be to the issue of trade testing?

3. What have you to offer if the EO asks you for further assistance?

PHASE	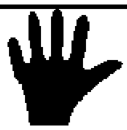	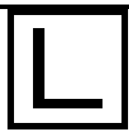	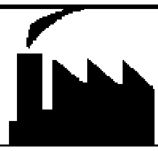
3 **Post implementation**	**Step 9** *Evaluating training* for appropriateness	**Step 9** *Possible routes:* • Journeyman • Self-employed • Different employer • Trade testing	**Step 9** *Possible options:* • Keep on - journeyman • Take on new apprentice • No apprentice
	Step 10 Providing ongoing *support* - for self-employment route	**Step 10** If self-employed - option of accessing *support*	
	Step 11 *Reviewing* and *replanning* of whole process		
	Step 12 Longer-term *evaluation* - tracer studies		

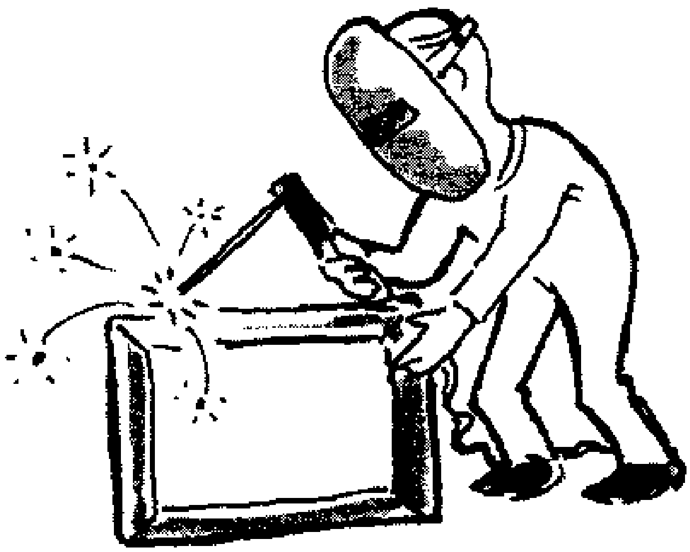

STEP 10: Provision of ongoing support

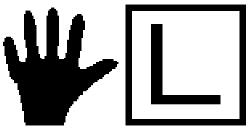

This step applies to the situation where *the graduate apprentice moves into self- employment and the implementing agency offers ongoing support.* This can take place immediately after the completion of the apprenticeship, or at any stage thereafter.

Usually, the implementing agency will have made it clear what support it is able and willing to offer at the beginning of the programme. The support will be the same kind of support that is offered to small and micro enterprises by most small and micro business advisory services. It may not be direct support, but could be in the form of a referral to an appropriate agency. The purpose of the support is to give the new business the best chance of surviving and becoming viable. **The best case scenario here is that the graduate apprentices will themselves become enterprise owners, and will be willing and able to take on apprentices themselves.**

The "aftercare" support services offered by ISTARN are all aimed at helping the newly self-employed graduate to make a success of his/her business. They include access to a tool hire-to-buy loan scheme, access to business advisory services, and invitations for inclusion in events such as the Small Business Expo.

Special ongoing support for a woman may include, for example, speaking to her family when she wants to practice a "non-traditional" trade, so that they are more supportive instead of discouraging her.

Some questions for you to answer?

1. What ongoing support can you offer to graduates who become self- employed?

____
____
____
____

2. What useful referrals can you offer such graduates?

____
____
____
____

3. How will you remind graduates who do not become self-employed immediately about the support services they entitled to?

____
____

PHASE	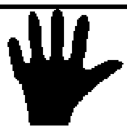	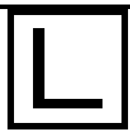	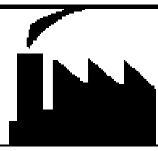
3 Post implementation	**Step 9** *Evaluating training* for appropriateness	**Step 9** *Possible routes:* • Journeyman • Self-employed • Different employer • Trade testing	**Step 9** *Possible options:* • Keep on - journeyman • Take on new apprentice • No apprentice
	Step 10 Providing ongoing *support* -for self-employment route	**Step 10** If self-employed - option of accessing *support*	
	Step 11 *Reviewing* and *replanning* of whole process		
	Step 12 Longer-term *evaluation* - tracer studies		

STEP 11: Reviewing and replanning

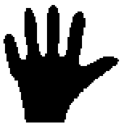

The process is still not complete for the implementing agency. In addition to evaluating and improving on the technical and business training aspects of the programme, the implementing agency *needs to review the whole process* from choice of trades onwards. At this stage, you will be in a position to:

- review the trades chosen and decide whether to change them or add others
- review the recruitment process and make changes if necessary
- review the orientation programme and make changes if necessary
- review the selection process and make changes if necessary
- incorporate the changes agreed to for the technical training aspect
- review the monitoring process and make changes if necessary
- review the ongoing support offered and make changes if necessary.

ISTARN has used this review process very productively to look at issues to do with the 10/90 Principle, Sustainability and Equity. On this basis it has made changes to both the preparatory and the implementation stages over time, as well as to the provision of ongoing support.

Some questions for you to answer?

1. When will you review the whole process?

____
____

2. Who will be involved in this review?

____
____

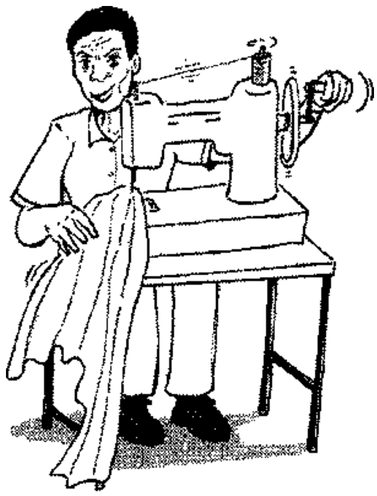

PHASE	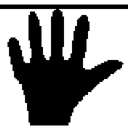	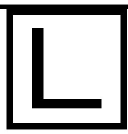	
3 Post implementation	**Step 9** *Evaluating training* for appropriateness	**Step 9** *Possible routes:* • Journeyman • Self-employed • Different employer • Trade testing	**Step 9** *Possible options:* • Keep on - journeyman • Take on new apprentice • No apprentice
	Step 10 Providing ongoing *support* -for self-employment route	**Step 10** If self-employed - option of accessing *support*	
	Step 11 *Reviewing* and *replanning* of whole process		
	Step 12 Longer-term *evaluation* - tracer studies		

STEP 12: Long-term evaluation

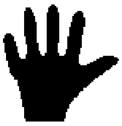

About three months after the completion of the programme by the graduates (up to Step 8), the *tracking process* needs to begin. This involves either sending out questionnaires, or going out and doing tracer study interviews. (For an example of a Tracer Study Questionnaire, see Appendix 6.) This process needs to take place about once every six months for three years in order to get meaningful results. The purpose of the tracer studies is to measure the impact of the TAP. What you will be interested in in your tracer studies will be related to why you decided to implement a TAP in the first place. If the TAP was intended to create self-employed entrepreneurs, then the information you gather will focus on what graduates are doing, whether they are self-employed and, if so, how viable their businesses are. If your only concern was that these particular participants find some form of employment, then the focus of your tracer studies will be different.

The tracer studies also provide an opportunity to collect further information about the relevance and impact of the programme, because you can also ask questions about the usefulness of the technical and business training, whether support services were accessed and, if so, how useful they were, what would make the programme more useful, and so on.

For those who need to "sell" the TAP in order to get apprentices, or to access funds, or to prove that money has been well spent, some information about what happens to graduates provides very good evidence.

ISTARN has conducted regular tracer studies and they have shown that there has been a high success rate with regard to graduates becoming self-employed. Because the tracer studies have been fairly comprehensive (getting to over 80% of the graduates), it has been possible for us to use the results to work out such figures as the cost of the training (in other words, the cost to the programme) required to create one job. For the first intakes, the cost to ISTARN for each employed or self-employed welder was Z$ 7 542 (with a subsistence allowance), and for each employed or self-employed carpenter, it was Z$ 3 286 (with a subsistence allowance). To this (for those who went the self-employment route) needs to be added the cost of setting up in business (usually the price of the tools), in order to get a picture of the cost of creating a job in the informal sector through a TAP. In 1996, we estimated that it would cost about Z$ 4 500 to set up in carpentry, so the cost of creating a job in carpentry was Z$ 7 786. This compares very well with the estimated Z$ 80 000 to Z$ 100 000 required to create a job in the formal sector (without training).

The impact of development programmes on the welfare of women Is seen as a key indicator of their success. The tracer studies provide an excellent opportunity for following up to see whether there are differential (...)s of success between men and women, and for identifying the causes such differentials and taking remedial action if necessary.

There are pros and cons to investing in tracer studies.

• They cost money and require time and effort from staff who may well be overworked in other areas.

• If they are not carefully thought through and if the questions asked are not useful, they may not yield very useful information.

• They can provide crucial information which makes it possible to assess whether a programme is worth the resources (financial and human) invested in it.

• They can provide evidence which can be used to "sell" the concept to potential apprentices, donors and government departments.

ISTARN has introduced the practice of holding annual TAP Conventions. All the graduates of the programme are invited to a workshop. The objectives of a Convention are to:

- **give graduates the opportunity to share experiences**
- **do some joint problems solving through sharing experiences**
- **give feedback to ISTARN about the programme from a more long-term perspective**
- **provide recommendations on how the programme can be improved**
- **help ISTARN assess the impact of the programme on the direct beneficiaries.**

The Convention usually coincides with the Annual Small Business Expo. Graduates who have started up their own businesses are encouraged to bring their products for display at the Expo and the stand is paid for by ISTARN.

Some questions for you to answer?

1. Will you conduct tracer studies?

____

2. Who will be responsible for the tracer studies?

____

3. What form will the tracer studies take?

____
____

4. How often will you do the tracer studies?

____

5. What will you try to find out in the tracer studies?

____
____

6. How will you use what you find out from the tracer studies?

____
____

If you work through this manual, and then plan and implement your TAP to this stage, then you will probably know as much about TAPs as we do.

If you think there is anything we can help you with, then please give us a call.

Our details are included in the inside front cover.

We look forward to sharing your learnings about Traditional Apprenticeship Programmes in the future, and developing best practice together.

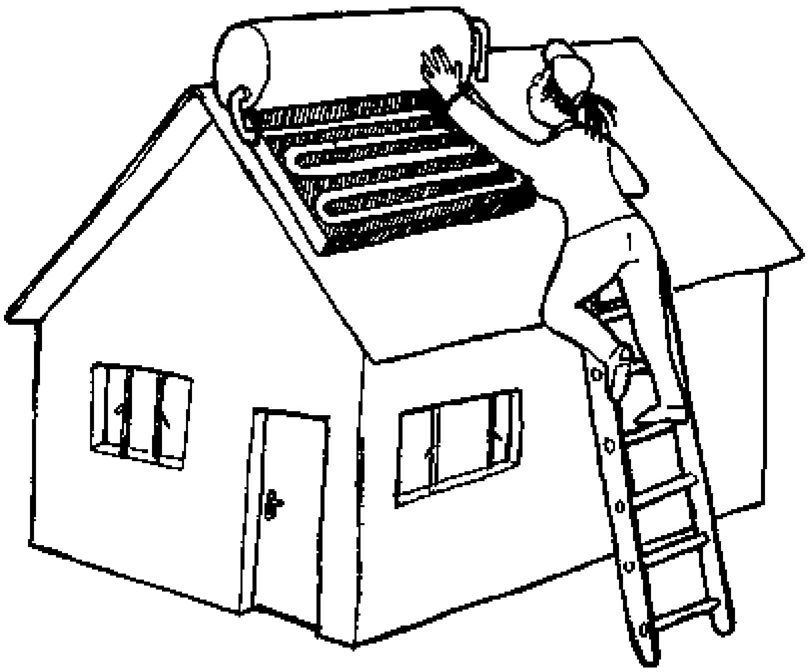

APPENDICES

APPENDIX 1: A Possible Format for a Business Plan for a TAP

Business Plan for a Traditional Apprenticeship Programme
for the...(name of organisation or institution)

1. Overall Purpose of the Programme:

____
____

2. Indicators of success:

____
____
____

3. Motivation for undertaking the Programme:

____
____
____

4. Key activities to be undertaken:

____
____
____
____

5. Key outputs anticipated and planned time frame:

Outputs	**Time frame**

7. Plan for monitoring and evaluation:

Activities planned	**Outputs anticipated**	**Time frame**

8. Human resources needed:

____
____
____
____

9. Budget

10. Cash flow

Date: _________________________

APPENDIX 2: Suggested Guidelines for Apprentices in Selecting a Placement

Most of your learning will take place at the work site where you negotiate a placement. Here are some guidelines to help you when you are looking for a placement.

- The enterprise owner (EO) must have enough work on a regular basis to keep you (the apprentice) busy.

- The work should be of a varied enough nature so that you can learn all aspects of the trade/skill.

- The EO must be experienced enough and skilled enough so that you can learn from him/her.

- The EO must be willing to pass on skills in running a business, as well as in the trade.

- The EO must have tools for you to use, and these should be hand tools, rather than heavy machinery. When you set up your own business, you will only be able to afford hand tools.

- The EO should be willing to give feedback to our programme so that we can improve it.

It is also best if you like and trust the EO, and s/he likes and trusts you. The relationship between you is very important. Once you have found the right place, it is up to you to negotiate a contract with the EO. We will provide you with an initial two weeks of technical training before you begin your placement, and a further two weeks towards the end of your placement.

APPENDIX 3: Example of a Traditional Apprenticeship Selection Interview Schedule

Name of candidate: ____
Trade: ____

1. Age

Age	16-20	21 -25	26-30	31 -35	36 and above
Score	5	4		2	1

2. Marital status

Married	3
Single	2
Divorced	1

3. Organisation recommending apprentice: ________________________

4. Name and address of enterprise where placement found:

____
____

5. Why do you want to be attached as a Traditional Apprentice?

Answer rated:

Very good	4
Good	3
Fair	2
Poor	1

6 What are your expectations from this programme?

Answer rated:

Very good	4
Good	3
Fair	2
Poor	1

7. Number of dependants in the family

Number	1-2	3-4	5-6	7-8	More
Score	1	2	3	4	5

8. Period of unemployment

Period	7 months - 1 year	1.5 - 2 years	2.5 - 3 years	3.5 years or more
Score	1		3	4

9. Source and amount of income/support during period of unemployment
(Most reduced circumstances gets the highest score on a scale of 1 to 5.)

Source: _______________________
Amount: ______________________
Score: ________________________

10. Why did you select your chosen trade?

Answer rated:

Very good	4
Good	3
Fair	2
Poor	1

11. What do you know about your chosen trade?

Answer rated:

Very good	4
Good	3
Fair	2
Poor	1

12. Other areas of development pursued: ___________________________________

____

____

13. Why did you fail in these areas?

Answer rated:

Very good	4
Good	3
Fair	2
Poor	1

14. What do you hope to do once you have completed your apprenticeship?

Answer rated:

Very good	4
Good	3
Fair	2
Poor	1

For the following questions, make brief notes on the answer, and give a score of 1 - 5, where 5 is a very good answer.

15. What will you do in the event of a lack of raw materials or inadequate tools at the enterprise where you will be attached?

____

____

____

Score:....................

16. What do you think your contribution should be during your period of attachment?

____

____

____

Score:....................

17. Have you ever worked under difficult and strenuous circumstances? Explain.

____
____
____

Score:....................

18. How do you regard self-employment as an option for earning a living?

____
____
____

Score:....................

19. If you have an accident at work, during your attachment, who will be responsible?

____
____
____

Score:....................

20. What obstacles do you think you might encounter if you were to try to start your own business?

____
____
____

Score:....................

21. How would you try to overcome these obstacles?

____
____
____

Score:....................

22. Have you ever been employed? If so, what happened that resulted in you losing the job?

____
____
____

Score:....................

TOTAL SCORE: ....
Total possible score: 86

Comments:

____
____
____

APPENDIX 4: Example of a Personal Data Form

CONTACT INFORMATION:

Surname: ____
First names: ____
Age: (in years) ____
Sex: ____
Trade: ____
Current Postal Address: ____________________________________
____
Residential Address while on attachment: _______________________
____
Permanent Home Address (one that does not change from time to time):__________
____
Nearest School: _______________________________________
Nearest Business Centre: ________________________________
Village: ____
Place of attachment (district): ____________________________
Physical address of enterprise: ____________________________
Telephone number: ______________________________________
Name of next of kin (1): __________________________________
Address: ____
Telephone number: ______________________________________
Name of next of kin (2): __________________________________
Address: ____
Telephone number: ______________________________________

PROFILE INFORMATION:

For how long have you been unemployed (years)? ___________________
Who has been supporting you? _____________________________
What has this support involved? ____________________________
Highest academic qualifications: ___________________________
When did you finish school? ______________________________
Post school training obtained: _____________________________
Practical subjects done at school: __________________________

NB: Please inform the TAP Co-ordinator of any changes relating to permanent address and place of attachment.

APPENDIX 5: Example of an Apprentice Appraisal Form

Name of Apprentice_____________________________________
Trade of Apprentice_____________________________________
Name of Instructor/Enterprise Owner_________________________
Name and Address of Enterprise___________________________
____
____

ATTENDANCE RECORD	**MONTH:** ______										
	Day		2	3	4	5		7	8	9	10
P/A = Present/Absent	P/A										
	Day	11	12	13	14	15	16	17	18	19	20
	P/A										
	Day	21	22	23	24	25	26	27	28	29	30
	P/A										
	Day	30	31								
	P/A										

PERFORMANCE APPRAISAL	Performance Scale									
	1	2	3	4	5	6	7	8	9	10
	Poor			Average				Excellent		
Use/operation of tools & machines										
Measuring & Cutting										
Quality of products										
Safety at work										
Initiative/Level of supervision needed										
Costing & Pricing										
Ability to market Products/Services										
Overall Interest in Programme										
TOTAL MONTHLY SCORE										

REMARKS: ____
____
____
____
____
____
____

Date: ________________

APPENDIX 6: Example of a Tracer Form

1. Name: ____

2. Postal address:____

3. Physical address:____

4. When were you apprenticed? (Please give months and year)_______________

5. Please tick appropriate box:

Are you: ☐ Employed (formal sector) ☐ Employed (informal sector)
☐ Self-employed ☐ Unemployed

6. **Personal Details**

Marital status: ______________ Number of dependants:____________________
Age: ______________________ Gender: ☐ Male ☐Female
Highest academic qualification:____
Other post school training:____

7. What were you doing before you enrolled for the Traditional Apprenticeship Programme? (Tick appropriate box)

☐ At school ☐ Employed (say for how long)_____________
☐ Unemployed (say for how long)_____________________
☐ Self-employed (say for how long)____________________

8. Was your participation in the Traditional Apprenticeship Programme useful? (Tick appropriate box)

☐ Not useful ☐ Useful ☐ Very useful

9. Please tell us why you think it was not useful/useful/very useful:

____
____
____

10. Do you think the technical training you got at ____________ was useful? (Tick appropriate box)

☐ Useful ☐ Not useful

11. What skill did you get training in? ___________________________________

12. Has the certificate you got after your training been useful? (Tick appropriate box)

☐ Very useful ☐ Useful ☐ Not useful

If it has been useful, in what way has it helped you? ____________________
____
____

13. Do you have any suggestions for improvement in the programme you attended?

____
____

14. Is there a demand for your trade in your area? (Tick the appropriate box)

☐ Yes ☐ Some, but not a lot ☐ No

15. Would you recommend to others that they do a programme similar to the one you did?

☐ Yes ☐ No

Questions 16 to 22 to be answered by those who responded to Question 5 by saying they were employed.

16. Please give the name and address of your employer: _________________
____
____

17. How long did it take you to find your current job? ____________________

18. Is your current job a new position, or did you take over from someone else? (Tick appropriate box)

☐ New position ☐ Position occupied by someone else before

19. At which of the following are you employed? (Tick appropriate box)

☐ Urban Business Centre ☐ Rural Service Centre
☐ Urban home ☐ Rural home

20. Are you finding any problems with your current job? (Tick appropriate box)

☐ Yes ☐ No

21. If yes, please describe your problems: ____________________________
____

22. What is your average income? ________________________________
____

Questions 23 to 32 to be answered by those who responded to Question 5 by saying that they were self-employed.

23. Please give the name, address and type of your business: ___________
____
____

24. How many people, other than yourself, do you employ? ___________

25. Who helped you to set up your business? (Tick appropriate box)

☐ Family ☐(Name of implementing agency) ☐ Other
☐ No-one

Please give details to explain your answer: _________________________
____

26. How long after your TAP apprenticeship did it take you to start your own business?
____

27. Did you do anything in between? (Please specify)___________________
____

28. What problems are you currently facing? (Tick appropriate box or boxes)

☐ Tools ☐ Capital ☐ Working space
☐ Other (specify): ________________

29. How do you think the problems should be solved? ___________________
____

30. Have you approached anyone with your problem(s)? (Tick appropriate box)

☐ Yes ☐ No

31. If yes, whom have you approached and what was their response? ________
____

32. What is your average income (profit) per month? ______________________

Questions 33 to 36 to be answered by those who responded to Question 5 by saying that they were unemployed.

33. Have you ever been employed or self-employed since doing the TAP? (Tick the appropriate box)

☐ Employed ☐ Self-employed ☐ Neither

34. What do you think are the reasons why you are unemployed even though you went through the TAP?
____
____

35. What other options do you think are available to you?_________________
____

36. What are you intending to do to solve the problem of your unemployment?
____
____

Questions 37 to 39 to be answered by all respondents.

37. Would you be interested in being informed about other opportunities that may arise from our programme? (Tick appropriate box.)

☐ Yes ☐ No

38. Would you be interested in joining a tool hire-to-buy scheme? (Tick appropriate box)

☐ Yes ☐ No

39. Please add any other comments you would like to make: ________________
____
____

Please return this form to:

Traditional Apprenticeship Programme,
XYZ Technical College,
PO Box 1234,
ABCD.

APPENDIX 7: Example of an Indemnity Form

MINISTRY OF EDUCATION
XYZ Technical College
PO Box 1234
ABCD

DEED OF INDEMNITY

I ____ (FULL NAME), a trainee on the EFG Traditional Apprenticeship Programme at the XYZ Technical College, agree to indemnify, without preconditions, the Organisation mentioned above in the event of any accident or injury occurring during my period of practical training. I am aware also that I shall not be covered by the Organisation's insurance policies or by Workman's Compensation Insurance during the period of training.

__________________________ Signature of Trainee	__________________________ Date
__________________________ Name of Witness in Full	
__________________________ Signature of Witness	__________________________ Date

APPENDIX 8: Example of a TAP Training Evaluation Form

TAP TRAINING EVALUATION

Please feel free to express your views on the technical inputs and support services you have been given by Mutare Technical College.

Please DO NOT write your name.

GENERAL:

1. What course were you doing? Please tick the appropriate box.

a) refrigeration ☐
b) cutting and designing ☐
c) welding and fabrication ☐
d) creative art and design ☐
e) motor-mechanics ☐
f) carpentry ☐
g) solar installations and repairs ☐
h) radio and television repairs ☐
i) electrical installations ☐
j) electrical domestic appliance repairs ☐
k) plumbing ☐
l) motor cycle repairs ☐
m) hairdressing ☐

2. How many were you in your group? (specify number) ______________

3. Did you enjoy your theory lessons? ☐ Yes ☐ No

Explain your answer ____
____

4. Did you enjoy your practical lessons? ☐ Yes ☐ No

Explain your answer____
____

5. What was really useful in your theory lessons?

Explain your answer____
____

6 What was really useful in your practical lessons?

Explain your answer____
____

7. What was not useful in your theory lessons?

Explain your answer____
____

8 What was not useful in your practical lessons?

Explain your answer ____
____

9 Did you cover the topics you were expected to cover in the given period?

☐ Yes ☐ No

Explain your answer ____
____

10 What topics do you feel could have been covered in more detail?

Explain your answer ____
____

11. Are there any topics which you feel were not covered?

☐ Yes ☐ No

Specify your answer ____
____

Any other comments ____
____

LECTURERS/LECTURES

12. Was your lecturer punctual for lectures?

☐ Yes ☐ No

13. Did your lecturer often excuse himself/herself from lectures?

☐ Yes ☐ No

14. How often did he/she excuse himself/herself from lessons?

a) Not at all b) Not so often c) Often d) Very often

15. Was your lecturer free or open to answer your questions?

a) Not at all b) Reserved at times c) Open/free d) Very free

16. Was your lecturer clear when giving explanations?

a) No not at all b) Not clear c) Clear d) Very clear

17. Were your lecturer(s) available during working hours?

☐ Yes ☐ No

Any other comments about your lecturers _________________
____
____

FOLLOW UP VISITS

18. How many times did your TAP Coordinators visit you?

19. How useful were follow ups to you?

a) Not useful at all b) Useful c) Very useful

20. Were the arrangements for training made enough for you?

a) Not at all b) Just adequate c) Adequate d) Very adequate

Explain your answer ____
____
____

21. Suggested improvements___________________________________
____
____

22. Comments which you may want to add_______________________
____
____

BUSINESS MANAGEMENT TRAINING

23. Did you enjoy the Start Your Business Training?

☐ Yes ☐ No

24. What did you enjoy most about the business training?

Explain ____
____
____

25. What did you not enjoy about the training?

Please explain ____
____
____

26. In what way do you think the business training helped you in terms of:

a) new business ideas? ____
____

b) generating a concrete business plan? ___________________________
____

c) motivating you to start your own business? ______________________
____

Any other comments ____
____
____

This manual is intended to provide guidelines and support to those interested in setting up their own Traditional Apprenticeship Programme (TAP).
It takes the form of a workbook to guide implementers in making choices and decisions about their particular TAP.

This manual should help interested institutions and organisations develop a TAP Programme using the experiences of GTZ-ISTARN as a foundation. However, this manual is not a blueprint, which should be followed slavishly, it has been produced to provide guidelines based on what is thought to be best practice.

This manual has a complimentary first volume entitled
'Is a Traditional Apprenticeship Programme an Option for You?' which describes what a TAP is. Both manuals are seen as an aid to replication and to the implementation of technical training programmes for the informal sector in different circumstances and locations.

ADDING VALUE:

Manual 1

Is

a TAP

(Traditional Apprenticeship Programme)

for

you?

gtz - istarn

ADDING VALUE:
Manual 1

Is a TAP

(Traditional Apprenticeship Programme)

an option **for you**

Manual produced by ISTARN, Zimbabwe

ISTARN

PO Box 559, Mutare
Tel: 263-20-68742
Fax: 263-20-68590
E-mail: gtztre@icon.co.zw

ISBN Number:

You'll need to decide what you want to do about copyright.

This manual was developed by Peter Chitiyo, the Senior TAP Advisor of ISTARN, in collaboration with Janet Shapiro of Nell and Shapiro cc, 27 Eighth St, 2196 Parkmore, Sandton, South Africa.

Layout and art work by **ACTION**, Harare.

INTRODUCTION: What is ISTARN?

The Informal Sector Training and Resources Network (ISTARN) is a Zimbabwe-based programme. It is a joint venture between the Zimbabwean and German governments, and receives financial and technical support from the German government through the Deutsche Gesellschaft f r Zusammenarbeit (GTZ). The project was initiated in 1995 in Masvingo, Zimbabwe, where a number of interventions were piloted, all of them aimed at assisting in the creation of jobs in the informal sector, in order to address the problem of unemployment which is endemic in Zimbabwe.

ISTARN has tried to develop an integrated approach to strengthening the informal sector, and its interventions have included a Small Business Advisory Programme, a Marketing Support Programme, and a programme to develop and strengthen Informal Sector Associations. The selection of interventions is intended to create an integrated package for the informal sector which will result in more, stronger and bigger businesses, creating sustainable jobs.

Among the initiatives piloted was a Traditional Apprenticeship Programme (TAP). This used a traditional practice of skills transfer to increase the potential for people learning skills through apprenticeships in the informal sector to set up and succeed in their own informal businesses. The intention of the TAP was to add value to the traditional practice, without excessive interference.

Initially piloted in 1995, the programme has shown very encouraging results, and has generated much interest. ISTARN is now in its replication phase, with Manicaland, Zimbabwe as the first site of replication. The TAP is being piloted here in different forms, with different host agencies.

As part of the replication process, ISTARN has produced a set of two manuals, under the title of Adding Value. The first describes what a TAP is and what is needed in order to set one up. The second provides guidelines for implementation. By reading the first manual, we hope that decision-makers in organisations and institutions that are potential hosts for a TAP -training colleges, vocational training centres, business associations, non-governmental organisations (NGOs) and private training institutions - will get enough background and information to enable them to decide whether a TAP is the right option for them. Once they have decided to go ahead, then the second manual should provide a useful guide on what to do, when to do it and how to do it.

The manuals are not blueprints. They are intended, rather, as guides so that, as development workers, we are able to build on one another's experience and learnings. We look forward to hearing from you about your TAP experiences.

The ISTARN Team

August 1999

ABBREVIATIONS

EO	Enterprise Owner
GTZ	Deutsche Gessellschaft f r Sussammenarbeit (German Agency for Technical Cooperation)
ILO	International Labour Organisation
ISA	Informal Sector Association
ISTARN	Informal Sector Training and Resources Network
MSP	Marketing Support Programme
NGO's	Non Governmental Organisations
'O' Level	Ordinary Level (4 years of secondary school)
SAP's	Structural Adjustment Programmes
SBAP	Small Business Advisory Programme
TA	- Traditional Apprentice
TAP	Traditional Apprenticeship Programme

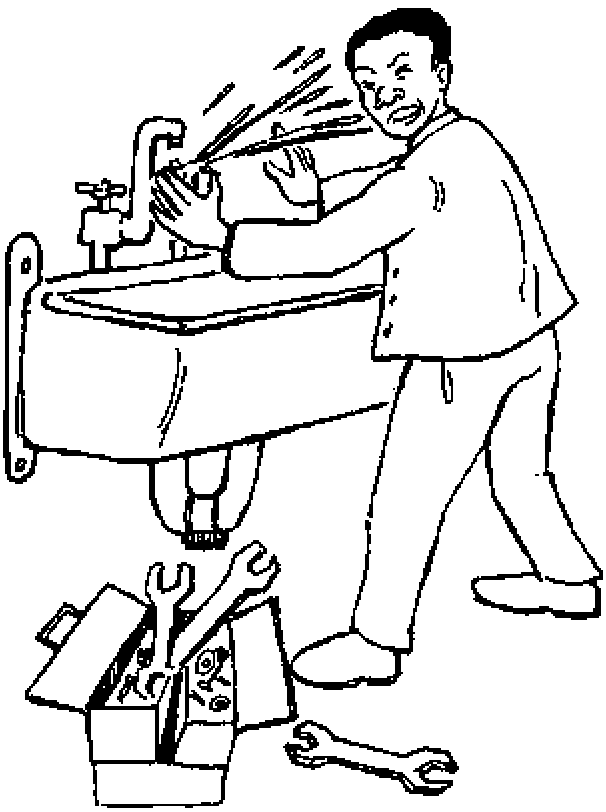

CONTENTS

SECTION 1: What is a TAP?

A Traditional Apprenticeship Programme (TAP) is a development intervention aimed at providing vocational skills training which is cost-effective, relevant and accessible to relatively large numbers of people. It is particularly appropriate in countries where there is a high rate of unemployment, and an established informal sector, and is based on a traditional practice which has been taking place world-wide for many centuries.

In the traditional practice, a person with an informal business, based on a marketable skill, takes on an apprentice who, while working for the business owner, learns the skill, as well as the practice of business. Traditionally, apprentices find their own attachments, and either pay the business owner a small sum for the training, or are given some form of subsistence support only (e.g. a place to stay and a meal a day). The practice is cost effective because of the practical orientation of the work and the productivity of the apprentice during training. It is particularly effective because the apprentices learn not only the trade skill, but are also inducted into a business culture and business networks.

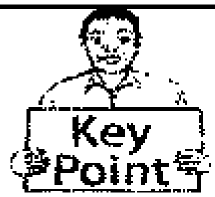

A Traditional Apprenticeship Programme (TAP) is a development intervention aimed at providing vocational skills training. It is cost- large numbers of people and is particularly effective where there is high unemployment and an established informal sector.

A TAP is based on a traditional practice which has existed world-wide for many centuries and which has been shown to be widespread in southern Africa.

Once the apprentice is sufficiently skilled, she has the possibility of setting up her/his own business. While the practice is not that different from a formal apprenticeship scheme, it does not involve long-term formal training or high level educational levels for entrance, apprenticeships are usually shorter than in the formal schemes and are not bound by rigid, inflexible regulations, and the training is geared to the informal sector market and self-employment, rather than to formal sector wage employment.

While there is an international literature on the traditional apprenticeship practice, there was a lack of documented information on the subject in southern Africa in general, and Zimbabwe in particular. ISTARN commissioned research into the practice in Zimbabwe, which not only found that it existed, but provided many guidelines for an attempt to replicate the existing practice.

A TAP is an attempt to add value to the traditional practice, without interfering excessively and ruining it. By "adding value" we mean that graduates of the development intervention, as opposed to the traditional practice, will have a greater likelihood of succeeding in creating jobs for themselves, and, possibly, for others.

Using and adding value to existing traditional systems ensures that approaches that have worked over long periods of time can continue to work within complex social, economic and cultural environments and can be continuously adapted to the demands of an ever-changing economic environment.

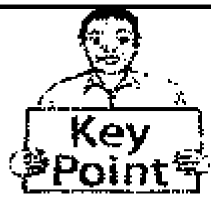

A TAP adds value to the traditional practice by interventions that mates it more likely that the graduates of the programme will be successful in creating jobs for themselves and, possibly, for others.

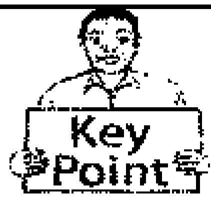

In a typical TAP, based on the ISTARN model:

participants come from the ranks of the unemployed, selection is based on entrepreneurial aptitude, the major site and vehicle of skills transfer is the workplace, appropriate skills Involve manufacturing or service, value id added through short-term technical training, utilising existing facilities and training capacity, and by providing short-term business training and support.

In a typical Traditional Apprenticeship Programme, based on the ISTARN model:

• Participants are recruited from the ranks of the unemployed, and are usually, but not always, young people who do not have marketable skills.

• They are selected on the basis of their entrepreneurial aptitude, as the intention is that, in the absence of jobs, they should, after completion of the programme, be able to become self-employed, the most common practice in the informal sector.

• The major site and vehicle of the skills training is the workplace - usually the workshop of a business owner who has agreed to take the participant on as an apprentice. Attachments (placements) are usually for a short time period - three to six months is common, but this depends to some extent on the nature of the skill. A carpentry attachment will be considerably shorter than a motor mechanic placement.

• The kinds of skills most appropriate are manufacturing skills (such as carpentry, welding, dressmaking, building) or service skills (such as hairdressing, motor mechanics, fixing of appliances). Ideally, the capital costs of setting up one's own business should be as low as possible.

• The TAP adds value through organising for apprentices to have initial short- term technical training, and, where necessary, short-term follow- up training. Short-term here means something like two weeks, but this varies, depending on the complexity of the skills involved. This training, as far as is possible, utilises existing training facilities and spare training capacity (such as that available at a technical college or training centre). The technical training component needs to be as short as possible, but as long as is necessary. The point of departure is that a trainee must gain all (but only) that knowledge and skills required and needed to perform competently those sets of tasks needed to be self-employed or to secure employment (most probably in the informal sector).

• The TAP also adds value by providing short-term business training, and support to those who take the initiative to set up their own businesses. This support could, for example, take the form of access to credit, or specifically for credit to buy tools for their trade (a tool hire- to-buy scheme), or access to business advisory services.

A TAP has been shown to be a cost effective way of addressing the need for vocational training, linked to entrepreneurial development, in the developing world.

ISTARN has carried out regular tracer studies of graduates of its pilot TAP and these have shown encouraging results. Of the first five intakes, comprising 317 graduates, 89% were employed in some way, and the over-whelming majority of these were self-employed.

SECTION 2: Why start a TAP?

A A TAP tries to address one of the major problems of our time - the ticking time bomb of increasing unemployment and the poverty to which it leads. These are factors that threaten stability, family support systems and individual survival. A TAP creates an opportunity for unemployed breadwinners to earn an income again, and for young people to enter the economy productively for the first time, albeit via "the backdoor".

Very conservative estimates of the percentage of the labour force that is unemployed in Zimbabwe range between 35% and 50%. In 1997 it was estimated that more than 90% of those who sat the "O" level examinations in 1996 were still unemployed.

In a society where the formal sector is able to provide employment for the great majority of its citizens, a TAP would not be an appropriate intervention. In most developing countries, where the reality is shrinking formal sector employment, the informal sector offers an option, and a programme such as a TAP offers a route to making that option as viable as possible. Increasingly, the informal sector has become the default route into the economy, but formal vocational skills training has not made the transition necessary to keep it relevant to the needs of this sector. A TAP is a low cost way of addressing unemployment through relevant vocational skills training.

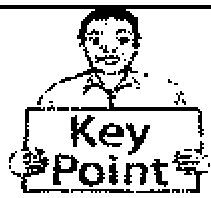

A TAP is particularly suited to the current conditions in most developing countries, where there is high unemployment, a shrinking formal economic sector, and a growing informal sector.

So, in answer to the question: Why start a TAP?, we suggest the following reasons:

• Unemployment has been identified by the International Labour

• Organisation (ILO) as a long-term persistent trend affecting up to 30% of the global labour force, or some 820 million men and women. The trend is being exacerbated by Structural Adjustment Programmes (SAPs) currently being implemented widely in the developing world.

• The World Bank estimates that the informal sector comprises up to 60% of the labour force in the urban areas of many sub-Saharan African countries. By the year 2020 this could rise to 95% in some parts of Africa!

• A programme which aims to create employment opportunities in the informal sector in developing countries through an innovative approach to skills development training, meets the need for relevant skills training head-on.

• Graduates of formal technical training courses are failing to find employment in the formal sector and their training has not been geared to self-employment and entrepreneurship. These graduates are contributing to the swelling numbers of the unemployed.

• The formal courses traditionally offered as technical training are not only no longer relevant to the needs of the market, but they are very costly at a time when budgets available for skills training are increasingly tight. A TAP is a low cost route to relevant training because it emphasises the workplace as a site of learning, and provides the apprentice with the basic skills to be productive in the workplace almost from the very word go.

The informal sector in Zimbabwe employs 1.6 million people, compared with 1.2 million employed in the formal sector.

Formal vocational training institutions assume that opportunities for formal employment exist when they do not. A tracer study of engineering students at Masvingo Technical College, Zimbabwe, in 1996, revealed that, out of 105 responding graduates (of a total of 138) of the Engineering Division who graduated in mid-1995, only 32.4% had found formal employment a year later. A tracer study carried out in 1999 of the Commerce and Engineering Divisions' graduates of 1997 at the Mutare Technical College, Zimbabwe, revealed that only 20.4% had secured formal employment.

• The training is directly related to goods or services that are going to be sold and the apprentice is taught on what the customer has ordered or requested. The whole process is, therefore, market-oriented, and grounded in the actual realities of the business world in terms of equipment, expectations, access to raw materials, and so on. The apprentice learns to provide services and goods at an appropriate level and cost.

• It is relatively easy and cheap to set up a TAP because it utilises existing infrastructure and the spare capacity of existing training institutions. So, for example, the infrastructure and staff capacity of technical colleges can be effectively utilised during vacations and evenings.

• The cost of creating one job in the informal sector, from training through to actual self-employment, through a TAP, is about one tenth of the estimated cost of just the training involved in creating a formal sector job.

In the ISTARN pilot programme, the average cost per trainee in the TAP, as estimated in 1997, including basic training, technical evaluation, administrative costs, business training and tool kit, was Z$ 5 608.83 (US$ 486.80). In 1998, the average cost per trainee in the TAP, right through to setting up in business, was Z$ 12 771.31. The increase in Zimbabwean dollars was largely due to the higher costs of some of the trades introduced, such as Refrigeration, Radio and TV Repairs, Motor Mechanics and Solar Electric Installations.

• A TAP meets the challenge of equity because it does not exclude those who lack relatively high levels of formal education (basic literacy skills are usually sufficient).

• Because there are not many regulations in the informal sector, there is flexibility of entry and exit. So, for example, a retrenched person can use the TAP as a route to self-employment until such time as employment opportunities in the formal sector exist again. The costs involved in setting up the kind of micro businesses towards which a TAP is geared are usually very low.

• A TAP has the potential to strengthen the informal sector in terms of productivity and quality because the technical training which the apprentice receives injects new ideas into the enterprise. Research has shown that one of the drawbacks to the traditional practice is that it is seldom innovative. A TAP adds value not only by creating learning opportunities for the apprentice, but also for the business or enterprise owner.

• A TAP addresses the need to develop an entrepreneurial spirit in struggling communities.

• And finally, and most importantly, our experience shows that a TAP can work by creating employment and self-employment opportunities!

A tracer study done on the Masvingo pilot TAP graduates in April 1998 showed the following for the 87.8% of graduates who were reached:

- 56.9% were self-employed
- 29,2% were employed by someone else
- Only 12.2% were unemployed.

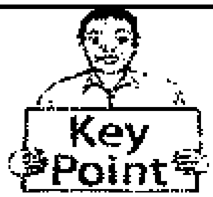

Why start a TAP? Because:

- The trend towards increased unemployment in the formal sector is accelerating.

- The informal sector is Increasingly becoming a more significant site of employment than the formal sector in sub-Saharan African countries.

- The TAP offers an innovative approach to skills development training that is relevant to the informal sector and cost-effective in terms of the input required to create an employment opportunity.

- The TAP does not require entrants with relatively high level educational qualifications and so meets the challenge of equity.

- The TAP adds value to the existing traditional practice by injecting innovative practices, through the technical training component, into sector that is notoriously conservative. Both quality and productivity can, thus, be improved.

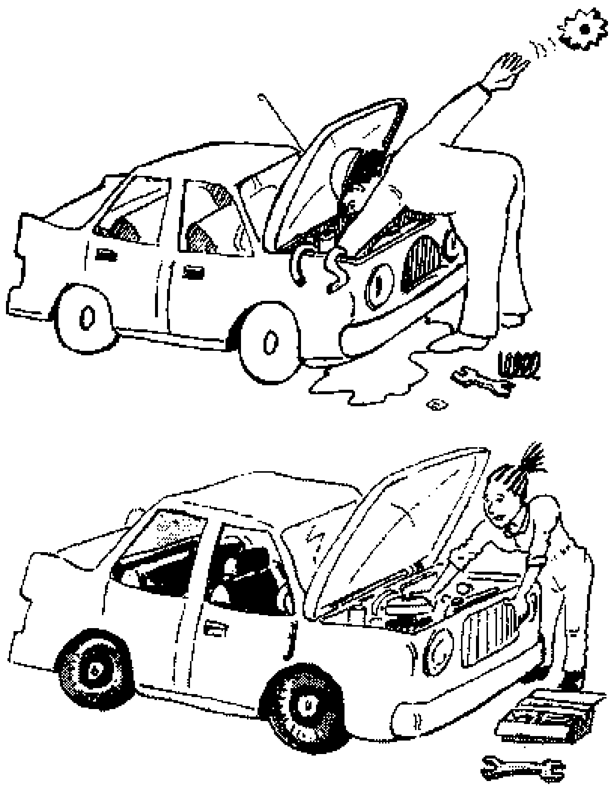

SECTION 3: Why is ISTARN producing this manual?

The ISTARN TAP has generated interest locally and within the sub-region. A number of local institutions have shown a keen interest in starting a similar programme. Development practitioners, governments at all levels, training institutions and organisations, and struggling communities are all looking for options that can help to address some of the most troublesome problems of the developing world.

Through the pilot TAP in Masvingo, ISTARN has developed and tested the model sufficiently to conclude that it is a useful training approach, and a productive intervention in the informal sector. It:

- Creates jobs through self-employment
- Skills people so that they are employable and get employment
- Achieves impact at a reasonable cost
- Adds value to the traditional practice

We see this manual, and its companion manual which deals with how to go about setting up a TAP, as an aid to replication, and to the implementation of TAPs in different circumstances and locations. The two manuals should help interested institutions and organisations:

- Assess their capacity and suitability to start similar programmes.

- Develop similar programmes, using the learnings of ISTARN as a foundation. While adaptations will need to be made, institutions and organisations interested in implementing TAPs will not need to start from scratch.

The manuals are intended to provide guidelines, based on ISTARN's "best practice" experience. They are not, however, blueprints which should be followed slavishly. Each experience will be different, something we ourselves are discovering as we move further into replication. Because of this, the second manual has the format of a workbook, to allow implementers to think about the ISTARN experience of best practice in the light of their own circumstances.

We suggest that those of you who are responsible for making the decision about whether or not to go ahead with a TAP read Manual 1 carefully. Once you take the decision to go ahead, you need to take a look at Manual 2, before passing both manuals on to those who will be required to implement the programme.

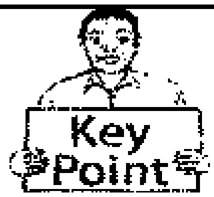

The manuals are intended to provide guidelines and support to those interested in setting up their own TAPs. Through them ISTARN hopes to reach a wider audience than would be possible through direct contact

Manual 1 provides the information and explanations that should enable decision-makers to decide whether or not a TAP is appropriate for their context.

Manual 2 takes the form of a workbook to guide implementers in making choices and decisions about their particular TAP.

Through the manuals we hope to reach a wider audience than is possible through direct contact, and to provide some support to other initiatives even when we cannot meet directly with those involved in them.

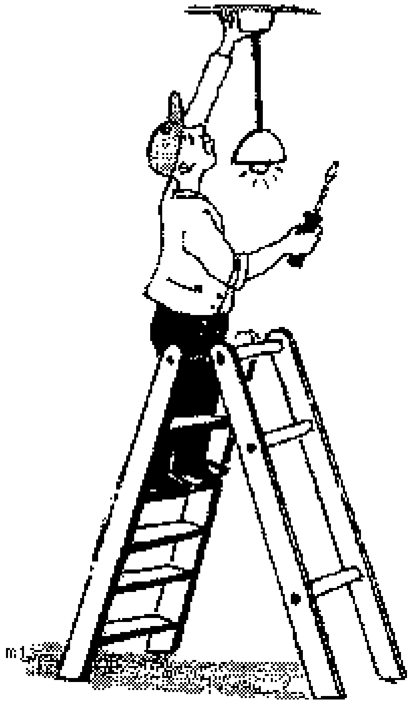

SECTION 4: When is it a good idea to start a TAP?

We believe that any organisation or institution with the right approach, support systems and networks can set up a traditional apprenticeship programme. However, in order for there to be the best possible chance of your TAP being a success, it is important that you give careful consideration to:

• the environment in which the TAP will be operating; and
• the culture and capacity of your own organisation.

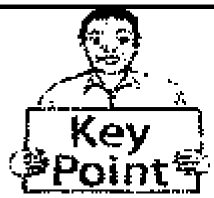

It is a good idea to start a TAP when the external environment is appropriate and when the culture and capacity of your organisation enhance the likelihood of success.

What is a suitable environment for a TAP?

While there are no hard and fast rules about this, our experience has led us to believe that a TAP is most likely to flourish when:

• there is ongoing high unemployment and a low capacity in the formal sector to absorb or even retain workseekers there is an existing informal sector, playing a significant role in the local economy

• there are concentrations of business activity in certain nodal points, providing markets for informal sector outputs

• there is already a traditional practice of informal apprenticeships

• the approach of government, at the local, regional and national levels, to the informal sector is at least constructive, even if restrictive regulations are in place.

In deciding whether your particular environment is suitable for starting a TAP, you need to think about issues such as unemployment, the role and robustness of the informal sector, the existing practices of informal training, and the government's attitude to the informal sector.

• In Zimbabwe, estimates of the unemployment rate range between 35% and 50%.

• The Economic Structural Adjustment Programme has led to shrinking formal employment.

• The informal sector employs more people than the formal sector.

• There was a well-established traditional practice before the ISTARN intervention.

• There has been some deregulation in relation to the informal sector, but a number of restrictive regulations are still in place. Nevertheless, government rhetoric towards the informal sector is positive.

In the ISTARN experience in Zimbabwe, a positive factor was the relatively high level of education of the unemployed population. Between 70% and 80% of the unemployed in Zimbabwe have at least an "O' Level Certificate. As the TAP intervention includes a formal training component, it is helpful if the participants have a good enough educational and literacy base to make the most of the opportunity.

Do you have the appropriate organisational culture and capacity?

There is probably no one organisation that is "exactly right" in every respect to set up a traditional apprenticeship programme. However, our experience at ISTARN and the extensive literature on similar interventions suggest that the following is a list of "ideal characteristics" for an organisation or institution that wants to set up a TAP.

- Clarity about the problem or issue it is addressing - knowing what the programme is supposed to achieve

- A carefully researched and thought through project concept which anticipates, to the degree possible, potential problems - although there is general agreement that there will always be problems no-one has anticipated!

- Sufficient staff with experience and skills appropriate to vocational training for the informal sector

- An established administrative and co-ordinating infrastructure (but not necessarily a physical infrastructure, as training facilities belonging to other organisations and institutions can be used)

- A business and market-related orientation

- Flexibility and creativity in both decision-making and implementation

- Participation in a network of programmes involved in support to the informal sector

- Flexible funding, linked to careful costing - in other words, costs should be kept low, but some funding needs to be available to be used flexibly as the needs of the programme become clearer

Good monitoring and evaluation systems

Even if you do not already have these characteristics, if you are looking at the option of setting up a TAP, then you should begin to look at the internal developments your organisation or institution will need to make it a suitable "home" for a TAP.

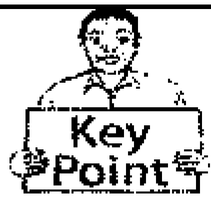

To give your TAP the best possible chance of success, you need to develop an appropriate culture and sufficient capacity within your organisation or institution.

ISTARN did meet these criteria in certain ways, but it was by no means perfect.

In its favour were:

- **Clarity on the problem, which it defined as unemployment**

- **Some basic research around a clear programme concept, and ongoing research related to it - the concept was the creation of employment through skilling people to be successful informal sector entrepreneurs**

- **Staff with an understanding of the informal sector and growing skills and expertise in the area**

- **An increasingly businesslike and market-related orientation**

- **Flexibility and creativity**

- **Contact with others working in the field**

- **Flexible funding**

- **Good related support services**

- **Administrative and co-ordinating capacity**

- **Ongoing efforts at monitoring and evaluation**

There were, however, gaps:

- **Staff were over-stretched and under-resourced - at one stage, well into the programme, there was one full-time person assigned to the Programme and he had access to 20% of one vehicle!**

- **There was sometimes confusion about how the success of the TAP should be measured - was it enough for graduates to be employed, or did they have to be self-employed?**

- **We did not always pay enough attention to costing and the implications of costing.**

- **Initially, we did not put enough emphasis on business-orientation - so, for example, we gave participants living subsidies, which not only made them more dependent on ISTARN, but also interfered with the traditional relationship between the Enterprise Owner (EO) and the apprentice in a way which did not add value.**

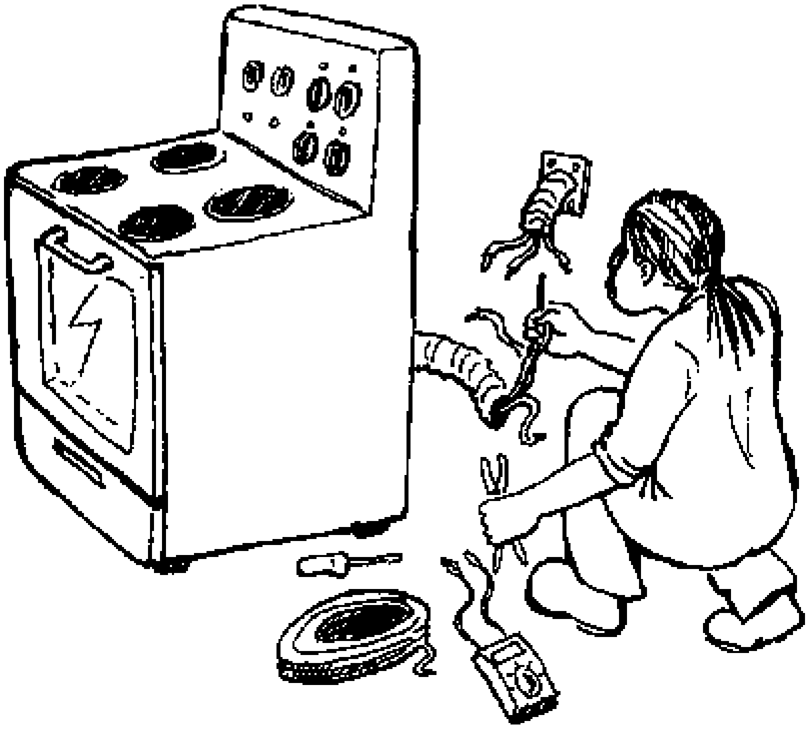

SECTION 5: What would you need to start a TAP?

The second manual in this set deals in detail, step-by-step, with how an organisation or institution committed to setting up a TAP would go about the task. Here we include a summary of what would be involved so that you can make an informed decision about whether or not to get involved in such a programme. Although you yourself may not be implementing the programme, you will need to be 100% behind the staff who are, and this means having an understanding of the implementation process.

There are three key sets of stakeholders in any TAP:

- The organisation or institution that is the "home" of the TAP and which is often also the provider or co-ordinator of the formal training element of the programme

- The apprentice - the person who wants to acquire a skill

- The enterprise owner (EO) who, in other contexts, might be called the apprentice's "master" - the person who has the skills that need to be transferred

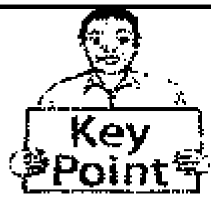

There are three key sets of stakeholders in any TAP - the implementing agency, the apprentice and the enterprise owner.

Involvement in a TAP means different things for each of these, and all these different types of involvement need to be taken into account when you Implement a TAP.

For the **organisation or institution implementing** a TAP, once the decision to go ahead has been taken, the process involves:

- Setting up a team to plan, implement and monitor the programme.

- Ensuring that the environment is understood and is as appropriate as possible to implementing a TAP (this may require some basic research, including surveying the existing informal sector).

- Gearing the organisation or institution up to be able to implement the programme (this may involve raising money, finding appropriate staff, re-orientating staff to the new approach, and so on).

- Taking key decisions on what skills to offer, what package to offer, how to recruit and select, whether to have gender targets, what geographical area to cover, and so on.

- Drawing up a plan for implementation.

- Preparing appropriate training for the formal part of the programme.

- Recruiting, and selecting participants.

- Conducting the first formal training and any subsequent formal training that has been agreed on (if the implementing organisation or institution is not a training agency, it will have to ensure that training partners are found, and that they offer a quality service).

• Monitoring the progress of the apprentice, the suitability of the placement (the workshop site) and the appropriateness of the formal training.

• Providing some form of support to the apprentices when they move on to self-employment (this will depend on the "package" offered and may simply involve referrals to appropriate agencies for loans, access to tools, business advice etc, or direct provision of these).

• Tracking the progress of graduates.

• Evaluating success against goals.

• Replanning in the light of learnings gained.

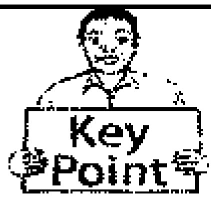

The implementing agency has to plan, implement and monitor, as well as gear up for implementation. It also has to recruit and select appropriate participants, ensure that the formal training part of the process takes place, monitor the placement and progress of the apprentice, provide some form of support to those who choose a self-employment option, and then track the progress of graduates to ensure that the programme is "working".

A note on monitoring and evaluation:

A traditional apprenticeship programme is a way of providing cost-effective, relevant skills training so that participants, usually drawn from the ranks of the unemployed, end up in employment of some kind. Unless you track the progress of graduates, you will not be able to say whether or not this goal has been reached. Without evidence that a TAP is a successful intervention, it will be difficult to "sell" it to prospective apprentices, or to donors or government departments.

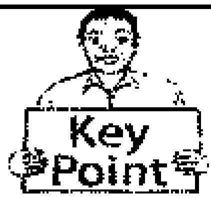

Apprentices, once they have decided that this is the sort of vocational training they want, need to find and negotiate an appropriate placement, attend the formal training sessions, and participate in and learn from, the activities of the work site. Once they are graduates, they may choose wage employment (in the formal or informal sectors) or self-employment.

For the **apprentices,** the process involves:

• Deciding whether or not this form of vocational training is appropriate for you.

• Finding an appropriate placement in the skill and location of your choice, and negotiating with the enterprise owner about the conditions of the apprenticeship.

• Attending the formal training sessions.

• Participating in and learning from the activities of the workshop site.

• Co-operating with the implementing agency and the enterprise owner to ensure that the placement is as productive as possible.

• Selecting a career path which could involve continued employment with the enterprise owner, employment elsewhere (in either the formal or informal sector), or self-employment. In each of these instances, there may also be a possible option to convert the certificate of attendance that goes with the informal training to a formal certificate of competence through, for example, trade testing.

• Accessing the support offered through the implementing agency for those choosing the self-employment option.

A note on trade testing:

Some development experts believe that the trade testing option "corrupts" the traditional apprenticeship process, making it more costly, both in terms of training costs, and in terms of the services that are subsequently offered - a motor mechanic who has successfully completed the first level of trade testing may expect to be able to charge more for his/her services, reducing the size of the market able to access his/her services. We do not take a purist position on this, and believe that this should be a decision taken by the apprentice, but that, where possible, the training process should make the option possible.

For the **enterprise owners,** the process involves:

• Deciding that taking on an apprentice is worthwhile for you as an enterprise owner - because it is a way of acquiring cheap labour, because you believe you might learn something in the process, or even simply because you want to make a contribution to your society by handing on your skills.

• Negotiating a contract with the would-be apprentice that suits you and satisfies him/her.

• Providing a working environment that encourages the development of both the practical skills of your trade, and business skills,

• Providing feedback to the implementing agency on the usefulness of the formal training and the progress of the apprentice.

A note on why EOs agree to participate in a TAP:

EOs give many reasons for participating in a TAP, including access to a cheap form of labour, profit from fees (which some EOs charge), increasing manpower, and "patriotism" which seems to mean fulfilling an obligation to society.

It is important that any implementing agency take all three of these stakeholders into account when thinking about what would be involved in starting a TAP.

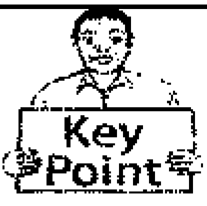

Enterprise owners take on apprentices for a variety of reasons, and, once they have negotiated a contract with the would-be apprentice, must provide a working environment that encourages the learning process, both in the trade and in business skills, as well as providing feedback to the implementing agency.

• ISTARN commissioned a study of existing practice in traditional apprenticeship in Masvingo Province in 1995 which showed that there was a strong traditional practice in the area. In 1997, it commissioned an extensive survey of informal sector enterprises in the sector which generated useful information.

• The ISTARN pilot TAP did not itself offer training, but relied on training partners.

• Currently, the ISTARN TAP offers a "package" which consists of the formal training and, for those who go the self-employment route, access to a Tool-Hire-to-Buy Scheme and to business training.

• ISTARN intends to track graduates for three years after the completion of the apprenticeship process.

• ISTARN-linked apprentices in the motor mechanic trade have written the first level trade test and have done well in it. Apprentices are required to pay the cost of such testing themselves.

• An evaluation of the ISTARN TAP found that, in many cases, EOs prefer to take on ISTARN apprentices who have had some formal training. Reasons given included the cost of damage to tools and wasted material in the early days if people come in "raw" and the fact that apprentices with some prior theoretical knowledge learn more quickly.

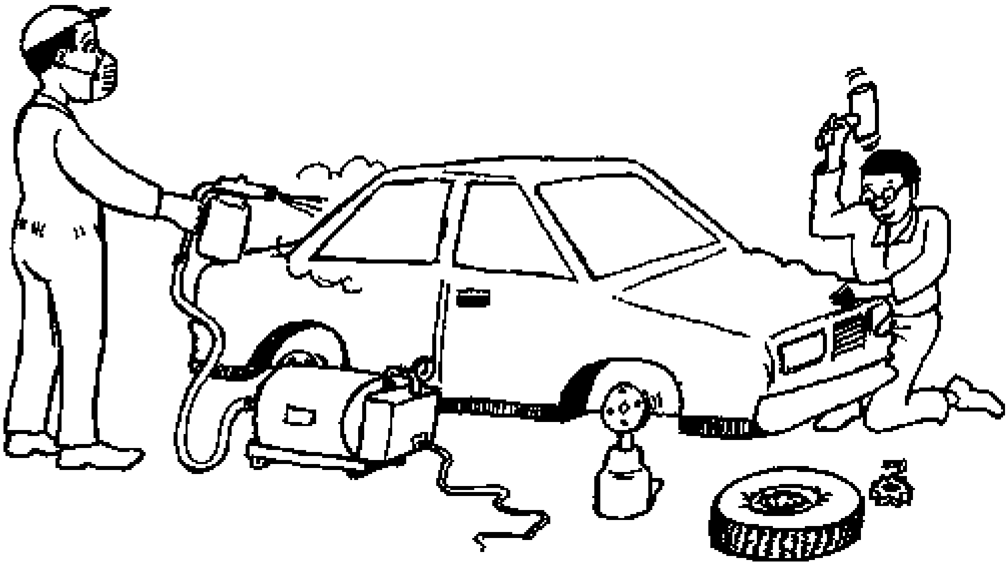

SECTION 6: Who should start a TAP?

We have already said that almost any kind of organisation or institution could start a TAP, provided it was flexible enough and informed enough to design and implement such a programme successfully.

Depending on the kind of organisation or institution you are, you will face different challenges in planning and implementing a TAP.

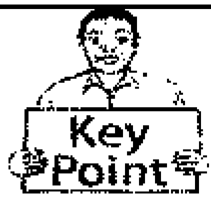

If you meet the criteria for an organisation with an appropriate culture and sufficient capacity, operating in an appropriate environment, then, no matter what kind of organisation or institution you are, you could consider starting TAP.

In the table below we have summarised some of the possible starting points, but there could well be others

KIND OF ORGANISATION	ISSUES SPECIFIC TO THAT KIND OF ORGANISATION	ADVANTAGES	DISADVANTAGES
NGOs	A TAP would have to fit in with the aims and objectives of the NGO. A decision about initiating such a programme would have to come from the Board. The impact would need to be monitored to ensure that it contributed to the greater good of the society.	NGOs tend to be flexible and have the potential to be creative without being tied up in the slow wheels of bureaucracy. NGOs have the freedom to test models which can then be replicated by other organisations and institutions.	Long-term sustainability may be a problem as the survival of an NGO may be donor-dependent.
Technical Colleges	These have not been traditionally orientated towards the informal sector, and a TAP will require them to change their approach in almost all areas of operation - management, lecture format, equipment orientation, goals and purposes, forms of recognition (certification), and market approach.	Facilities and staff exist. They are geared towards student intakes. They are geared to the procurement of training consumables. They may have access to student subsidies.	They are often training-driven, at the expense of market orientation - they have a tendency to offer the training they have, rather than that demanded by the market. They may be too bureaucratic and regulation- controlled to make them suitable for a programme that requires flexibility.

KIND OF ORGANISATION	ISSUES SPECIFIC TO THAT KIND OF ORGANISATION	ADVANTAGES	DISADVANTAGES
Vocational Training Centres	As these are often run by community representatives, and the intention is that, at least partially, they will be run by financial contributions from the community (fees), the community would need to buy into the idea of a TAP as a credible alternative form of vocational skills training.	They are accessible to people in rural areas. They are more flexible than technical colleges, and less concerned with formal qualifications, but they are still geared to training. While they may have facilities, they are more concerned with the programme offered and are willing to use the facilities of other institutions.	TAP placements in more modern skills (such as fixing electrical appliances) may be limited in more rural areas. Placements in general may be more limited in rural areas, and those in urban areas more difficult to access for people who come from the rural areas, particularly if they have no way of finding accommodation.
Private training institutions	These provide a service in return for payment. They survive on, and exist for, the profit generated from selling training. They may specialise in one skill or offer a number of different skills. There are at least 100 such institutions in Zimbabwe.	They have a built-in market orientation. They are geared to offering low cost training in a cost-effective way.	They tend to be orientated towards the classroom, rather than the workplace. There may be a reluctance on the part of potential students to pay profit-related fees for a course that does not provide a "proper" qualification. They are not necessarily impact-oriented (but would have to be able to "prove" results if they wanted to go on getting students).

• Initially, ISTARN was an NGO which used the training expertise and facilities of other NGO training partners or of the Technical College which housed it.

• Now ISTARN is experimenting with different starting points, including Vocational Training Centres and Technical Colleges.

SECTION 7: What are some of the issues you need to consider?

If you decide to go ahead and implement a TAP, there will be many issues which you need to consider and about which you will need to make decisions. In Manual 2 we provide more information on these, but here we want to list some of them and describe them briefly, so that, as decision-makers, you can be aware of the kinds of complexities and dilemmas that your implementation team will face.

As decision-makers, you need to be aware of some of the key issues and dilemmas that will need to be dealt with in the implementation phase. Among these are:

- **choice of trades/skills to offer - the Importance of selecting trades and skills which are marketable in the context of the informal sector**
- **gender - particularly the inclusion of women in the programme**
- **the 10:90 Principle which states upfront the need for participants to match the 10% input from the implementing agency with their own effort as the remaining 90% input**
- **selecting winners - those most likely to make a go of their own businesses in the medium- to long-term**
- **formal certification and qualifications - where they fit in and the problems they raise**
- **monitoring and evaluation - their purpose and their usefulness**
- **outreach - getting to significant numbers of people.**

Choice of trades/skills to offer

The growth of urban areas and the introduction of modern products and technologies has opened up many new opportunities for small-scale enterprises, thus extending the potential of the traditional practice. This is important because it means that a TAP can offer training in a variety of skills. An over-focus on any one skill in a particular geographical area might lead to saturation of the market. An understanding of the informal sector market and existing enterprises will help you to make market-related choices about what to offer.

In a TAP, other considerations when deciding what trades/skills to offer would include the availability of training expertise in the skill, the availability of apprentice placements and the willingness of EOs to take on apprentices, the length of time it is likely to take for someone to become sufficiently skilled in the particular trade/skill, and the likely capital cost of setting up one's own business.

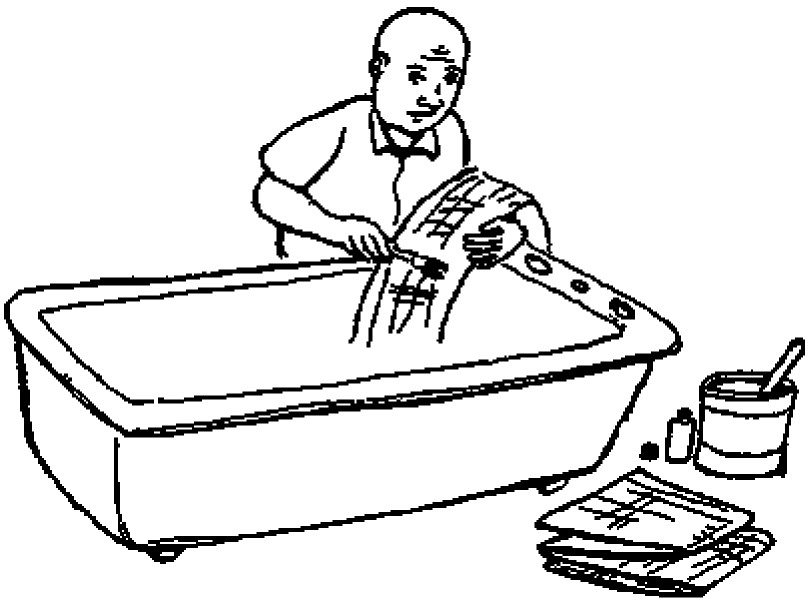

In 1997, ISTARN commissioned a study of the informal sector in Masvingo Province and, through this, identified a range of potential trades/skills which could be incorporated into the TAP. Initially only carpentry and welding were offered, but later intakes were offered the additional options of dress-making, radio and TV repairs, motor mechanics, refrigeration and solar electric installation.

Of these, motor mechanics is the one that requires the longest training (about 18 months) and the greatest investment of capital to set up a business (about Z$ 12 000). Although purists would probably exclude it as an option on these grounds, and it is likely that apprentices will end up having to work longer before they can set up their own businesses, it has been a successful area for the ISTARN TAP.

In the studies done in Masvingo it was found that hairdressers were reluctant to take on apprentices because their experience was that, as soon as apprentices had some skills, they left and set up businesses in competition with them. The reason for this was the very low capitalisation cost of setting up a hairdressing business.

Gender

Gender is a major consideration in any development work, and, for those of you who have a more profit-oriented approach, women are often a market that has not been fully penetrated. Studies have shown that women tend to occupy positions at the lower end of the informal sector - so they are more likely to be street vendors than to be involved in manufacturing, for example. Research has also shown that women usually experience more problems than men in setting up and sustaining their own businesses. One of the implications of this is that a TAP, which adds value by providing ongoing business support, may have an important role to play in changing the profile of women in the informal sector.

In addressing the issue of women in a TAP, there are two approaches: the one is the inclusion of women in traditionally male-oriented trades, and the other is the inclusion of trades in the programme which are more "women-friendly".

If gender equity is a concern for you and your organisation or institution, then you probably need to set targets for how many women (as a percentage of all apprentices) you aim to include, and work consciously towards meeting the targets.

ISTARN has always had gender equity-related targets, and has gone both the route of encouraging women to work in traditionally male dominated trades, and the route of including "women-friendly" occupations. In the first two intakes at Masvingo, when only welding and carpentry were offered, only one woman was recruited. She did carpentry and is now successfully self-employed. In the third intake, which was of motor mechanics, there were two women, but they both dropped out. In the fourth intake, there were attachments in dressmaking, but women also chose to do welding and carpentry.

The 10/90 Principle

We believe that this principle is fundamental to the success of a TAP. Put simply, the principle is that, in an intervention such as a TAP, where success is so dependent on the mind-set of the participant, the implementing agency offers an opportunity which is 10% of the input, but, in order for the opportunity to be maximised, participants are expected to input 90% in effort.

This principle needs to be presented upfront to participants, and to be stressed throughout the process. It has many implications which include the need to encourage independence from the implementing agency from the start, and to ensure that "support" is not interpreted by either the implementing agency or the participants as "hand holding"; and; the need to select carefully and to make sure that participants understand the principle and are willing to put in the required effort.

ISTARN learned the importance of this principle by experience. Initially, for example, we offered a subsistence allowance, and negotiated placements for the apprentices. The first intake had unrealistic expectations and many complaints at the beginning of their placements. Now participants are expected to find their own placements and negotiate directly with the EO, and a subsistence grant is no longer offered. We found that when apprentices were offered a subsistence grant or a down payment on the tool hire-to-buy scheme instead, most chose the latter, indicating that they could survive without the subsistence grant.

Selecting "winners"

This issue is linked to the "10/90 Principle", but refers specifically to the fact that, if you want people to become self-employed and, possibly, set up businesses which can employ others (job creation), then you select those who are most likely to become successful entrepreneurs, whether in the short- or the long-term. One way of doing this is to maintain the barriers to selection that approximate the traditional practice, making selection for the programme conditional on would-be apprentices finding their own placements, and being able to find their own accommodation and food.

ISTARN found that, once it was clear that it did not intend to subsidise apprentices, the committed ones generally sorted themselves out, even if it meant moonlighting (working at night) to make money for their subsistence. A word of warning here: once you have begun the practice of offering a subsistence grant, it is much more difficult to stop it than it would have been never to offer it in the first place.

Formal certification and qualifications

In the ISTARN TAP model, all apprentices get certificates of attendance on completion of their attachments. Apprentices are given the option to write trade tests, where these exist, but they pay for them themselves. This is the point at which the informal and formal systems of education have the potential to meet. With moves towards formal recognition of prior learning and experience, the options of moving from informal to formal levels of qualification are likely to increase. In education and training terms, this creates important opportunities. In the informal sector, however, it is an option that needs to be treated with care. While establishing "test standards" may increase the quality of work apprentices produce, quality is not a sufficient predicator of success in itself and needs to be defined in relation to the target market - what it wants and needs in terms of quality. If accreditation and certification result in higher prices for goods and services in the informal sector, then the training that leads to them may become as irrelevant as that offered currently in formal technical training courses.

ISTARN staff believe that anything but the most basic trade testing level will have the effect of making past apprentices too costly for their target market which would rather use someone with sufficient skills at a **lower cost, than someone with many skills at a higher cost.**

Monitoring and evaluation

Monitoring and evaluation enable an implementing agency to track the progress and success of a TAP. Monitoring takes place during the process and enables the implementing agency to take remedial action where necessary. So, for example, if monitoring of placements shows that a particular placement is inappropriate because the EO cannot provide a suitable environment for the transfer of skills, then the apprentice can be encouraged to seek an alternative placement. Monitoring might show that the technical training input is not sufficiently relevant to the needs of the workplace, and then adjustments could be made to subsequent technical inputs.

Evaluation is more long-term and relates to whether the programme is achieving its intended goals or impact. In a TAP, this would be that graduates end up self-employed, or, at the very least, employed. This requires tracer studies of graduates. Evaluation is clearly very important for programmes funded from public money (government or donor) which are required to demonstrate that such money is being well-spent. It is also important for private training institutions who can only expect to recruit fee-paying trainees if they can demonstrate that the programme leads to some form of employment.

ISTARN has gone to some trouble both to monitor and evaluate its TAP. The monitoring process has led to some adjustments to the technical training, based on workplace needs. The evaluation, through tracer studies, has been able to show that the ISTARN TAP is, indeed, achieving its goal of creating jobs through self-employment, at a credible rate, by international comparison.

Outreach

By this we mean that a TAP needs to reach significant numbers of people to make it as cost-effective administratively as possible, as well as to ensure that it makes some degree of significant impact on the problem of unemployment. This means that there need to be regular intakes (probably three to six monthly) of a reasonable size (your early intakes might be smaller - in the region of 30 to 40 apprentices - but as your experience grows you will be looking at numbers of between 40 and 100).

The first ISTARN intake at Masvingo was 40, and the second 39. The most recent intake in Mutare, from where the replication phase of ISTARN is being directed, was 87. The 1998 intake in Masvingo was 120.

Cost recovery versus Equity

The issue here relates to skills training where recovery costs on the formal training are prohibitively high. A case in point is the training of motor mechanics. If, in the interests of sustainability, and, in line with the 10/90 Principle, the programme insists on the participants paying full fees, this may exclude people who cannot afford the fees. The Principle of Equity (that the option for participation should be open to all, particularly the most needy) is then compromised.

ISTARN is investigating the possibility of establishing a **scholarship fund for those who are not able to pay full fees.**

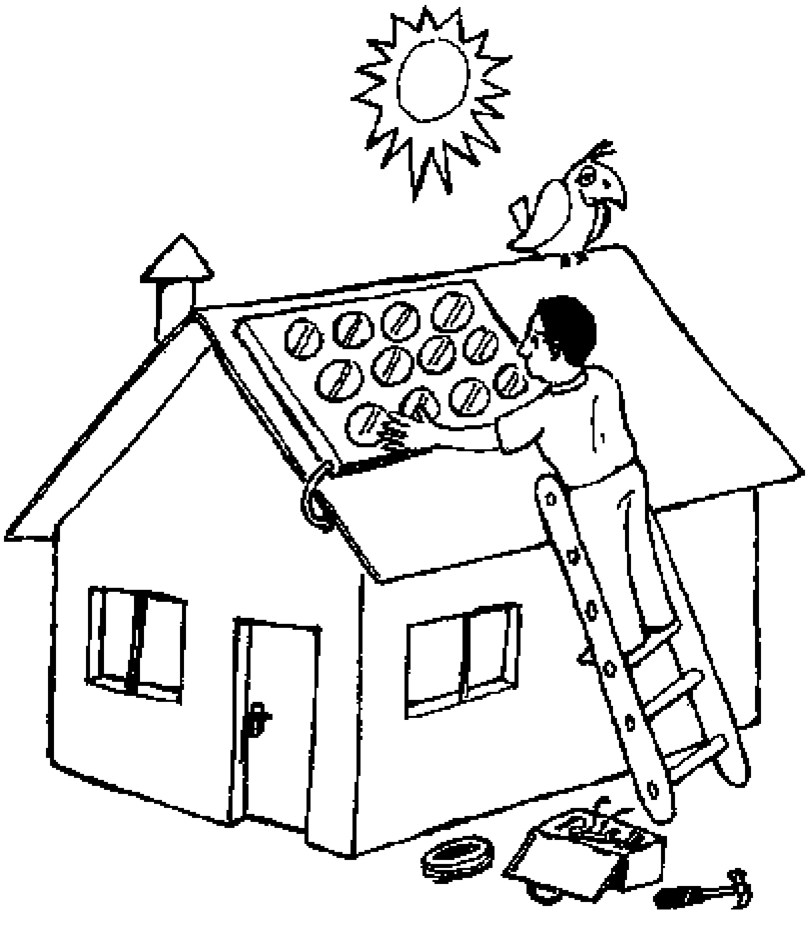

SECTION 8: Who should be involved in implementing a TAP and how should you involve them?

Effective implementation of a TAP requires a team approach. The team needs to include decision-makers and hands-on implementers, although the day-to-day involvement of the different levels may vary. The team also needs to be excited by the idea of a TAP, and keen to see it succeed.

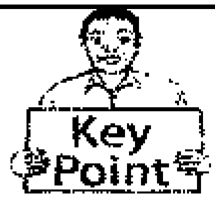

Successful implementation of a TAP requires the enthusiastic involvement of a TAP team.

WHO SHOULD BE ON THE TAP TEAM?

Ideally the team should include **someone who has the power to make decisions** about the use of the budget, so that it can be used flexibly and appropriately. This person may not be involved on a day-to-day basis but will attend team meetings and provide advice and support when it is needed.

The main implementing role should be played by the **TAP Co-ordinator or Manager** who should have the responsibility for planning, scheduling, coordinating the internal team and any outside stakeholders, implementing, monitoring and evaluation. This is the person who should be ensuring that adequate records are kept, that reports are written, experiences are shared and networks and contacts are established and maintained. This is the frontline person, responsible for marketing the programme and keeping on the cutting edge of developments in the field of vocational training for the informal sector.

Training providers, whether internal to the implementing agency, or brought in from other institutions or organisations, also need to be part of the team. They have the responsibility for developing appropriate curricula and materials and for ensuring that the technical training is of a high quality and relevant content.

Depending on the size of the programme, one or more **fieldworkers,** able to go out into the field and assess placements and apprenticeship process, as well as the relevance of the training given, will also be needed. Some of this can be done by the Co-ordinator, but if you are intending to have 100 or more apprentices on the programme at any one time, then s/he will probably need help.

This team should be meeting regularly to plan, review and reflect on learnings emerging from implementation, share decision-making, make adjustments to plans and processes where necessary, and provide support to one another, particular in the early stages of planning and implementation. The team should probably plan to meet weekly initially, and once a fortnight thereafter.

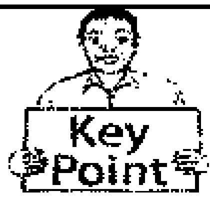

Ideally the TAP team will be made up of:

- **Someone with the power to make key decisions, particularly in relation to the use of the budget**

- **The TAP Co-ordinator or Manager with overall responsibility far planning, Implementation and monitoring and evaluation**

- **Training providers, whether internal or external partners**

- **One or more fieldworkers to support the Co-ordinator/Manager.**

Initially, in the pilot phase, the ISTARN team consisted of the Advisor appointed by the donor (GTZ) who had decision-making power in relation to the budget and the programme, and the Co-ordinator. There is now an additional staff member who has remained in Masvingo, while the Coordinator is running the programme and the replication initiatives in Mutare. There were times when the programme was under-staffed and the single dedicated staff member struggled to meet all his commitments. Even now, when the host College for the replication phase (Mutare Technical College) is taking far more responsibility for the programme, and has its own team, there are sometimes capacity problems.

HOW DO YOU GET TEAM MEMBERS TO BUY INTO THE TAP PROCESS?

If this manual has convinced you that the TAP is a real option for your institution or organisation, then we suggest that you give it to those who are likely to be responsible for implementing the TAP in your institution or organisation, and ask them to read it and think about it. Then you need to sit down together and talk about what a TAP would mean for you, and whether it is really a viable option for your institution or organisation. Suggest they read Manual 2 as well, and look at it yourself. The degree of success of your TAP will depend to a large extent on the degree of enthusiasm with which it is implemented. It is not enough to tell team members they "must" implement a TAP; they also need to "want" to implement it.

Some suggestions for getting the team to buy into the idea:

- Be clear about why you think it is a good idea for your institution or organisation to start a TAP.

- Communicate your enthusiasm for the idea, but

- Don't present it as a "have to do", rather

- Present it as an idea that has a lot of merit and which those who might be involved need to discuss together.

- Provide encouragement and support.

- If you are expecting someone to take on TAP responsibilities, make sure you discuss what responsibilities they will be relieved of.

- Make sure that the whole organisation or institution is aware of the new venture, what it is meant to achieve, why it is important, and who will be working on it.

- Give the team an opportunity to share its plans, learnings and achievements with the whole organisation or institution.

Don't impose the idea on those who will have to implement it - rather motivate, encourage and support them to buy into the idea.

SECTION 9: Where can you get support for your efforts to start a TAP?

It is important for you to remember that you are not being asked to reinvent the wheel here - there is extensive international experience in traditional apprenticeship programmes in various forms, and there is also the ISTARN experience, as reflected in these manuals, for you to draw on.

We have included a short bibliography at the end of this manual, so that, if you are interested, you can read more about TAPs.

Our contact details are to be found in the inside front cover of this manual. We look forward to hearing about other attempts to set up TAPs, and are able to offer:

- a consultancy and advice service, based on our own experience of starting TAPs; and, in the near future,

- a set of training modules related to some of the more common trades/skills that feature in TAPs.

All that remains to do is for you to make the decision:

When Are you Going to Start Your TAP?

BIBLIOGRAPHY

This list is intended to guide you to a few additional sources of information about TAPs. We have selected readings we found particularly useful and interesting. The list is by no means comprehensive.

FLUITMAN Fred (1992) Traditional Apprenticeship in West Africa: Recent Evidence and Policy Options. ILO.

GRIERSON John P (1997) Where There is No Job: Vocational Training for self- Employment in Developing Countries. Swiss Centre for Development Co-operation in Technology and Management; The Centre of African Studies, the University of Edinburgh; and the Swiss Agency for Development and Cooperation, Switzerland.

KWASHIWA Daglus, MALCOLM Rosie and CARLTON Andy (1997) Report of a Survey of Informal Sector Enterprises Carried Out by ISTARN. GTZ-ISTARN, Zimbabwe.

MAVUNDUSE Donald (1995) The Existence and Nature of Traditional Apprenticeship in the Informal Sector of Masvingo Province, Zimbabwe: An Assessment of the Credibility of Traditional Apprenticeship as vehicle for Further Training. A Report for the GTZ ISTARN Project, Zimbabwe.

NELL AND SHAPIRO CC (1998) Adding Value: A Formative Case Study of the Traditional Apprenticeship Programme (TAP) of the Informal Sector Training and Resources Network (ISTARN), Masvingo Province, Zimbabwe. Prepared for ISTARN, Zimbabwe.

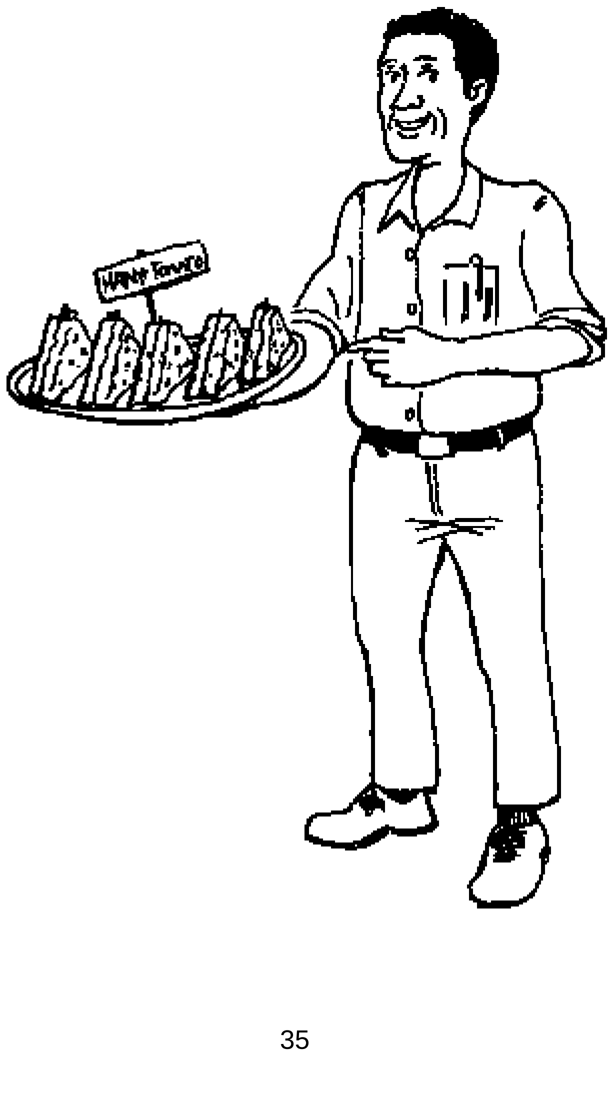

This manual describes what a Traditional Apprenticeship Programme (TAP) is and what is needed to set one up. It provides information and explanations that should enable decisions makers to decide whether or not a TAP is appropriate in their context.

It is designed for development practitioners and decision makers in organisations such as training colleges, vocational training centres, business associations, non-governmental organisations (NGO's) and private training institutions.

By reading this manual interested institutions and organisations should be able to assess their capacity and suitability to start similar technical training programmes for the informal sector.

If an institution or organisation should decide to go ahead and implement a TAP then it should study the complimentary second manual entitled 'How to set up and run a TAP'.

Dieter Hermanns
Wolfgang Klemmstein

Lernen ohne Sprachbarrieren

Technische Mathematik Metall

Lösungsheft

Deutsche Gesellschaft für
Technische Zusammenarbeit (GTZ) GmbH
Projekt CRYSTAL / 1069
Postfach 51 80 · 65726 Eschborn

Deutsche Gesellschaft
für Technische Zusammenarbeit
(GTZ) GmbH, Eschborn
Federal Republic of Germany

L E R N E N   O H N E   S P R A C H B A R R I E R E N

TECHNISCHE MATHEMATIK METALL

Hermanns- Klemmstein

Besondere Merkmale:
Alle Aufgaben sind textfrei. Die vorhandenen Bilder, Symbole und Zahlen erfordern keine Übersetzungen.
Während in der Lehrerfassung noch Überschriften und Fachwörter erscheinen, tragen die Schüler die vorkommenden Begriffe handschriftlich in die Leerzeilen der Schülerversion ein. Der Unterricht findet in der lokalen Umgangssprache statt.

Auf den **INFORMATIONSBLÄTTERN** zeigt ein Schlüsselbild das neue Thema jeweils in einem typischen Anwendungsbeispiel. Daraus ist eine Formel abzuleiten, die als Regel wörtlich festgehalten wird. Darunter zeigen Rechenbeispiele die wichtigsten Anwendungsvarianten. Abschließend ermöglichen leichte Testaufgaben eine erste Erfolgskontrolle in kürzester Zeit.

Die **AUFGABENBLÄTTER** bieten Probleme mit unterschiedlichem Schwierigkeitsgrad, wobei die Grundformel oft umgestellt werden muß.

Curriculare Anpassung:

Je nach Aufbau der lokalen Lehrpläne sollte die Themenwahl dem lokalen Bedarf angepaßt werden. Diese projektadäquate Auswahl ist vor Ort zu vervielfältigen.

Zur Erinnerung:
Beachten Sie möglichst folgende methodischen Hinweise!

- Fragen Sie die Schüler nach der möglichen Bedeutung des Schlüsselbildes und der darin verschlüsselten Regel!
- Beteiligen Sie möglichst viele Schüler am Lösungsprozeß bei den Aufgaben!
- Geben Sie den Schülern das Resultat der Hausaufgaben, aber kontrollieren Sie das Verständnis des Lösungsweges!
- Benutzen Sie die beiliegenden Modellösungen der Lehrerfassung zum Vergleich!

LEARNING WITHOUT LANGUAGE BARRIERS

TECHNICAL MATHEMATICS FOR METALWORKING

Hermanns - Klemmstein

Special features:

None of the exercises have written instructions. The pictures, symbols and figures do not have to be translated. Whereas the teacher's copy contains headings and subject terminology, the pupils are required to enter terms by hand as they occur, in blank spaces provided in their copies. Teaching takes place in the local vernacular.

On the **INFORMATIONS SHEETS**,a key picture shows a typical application of the new topic. From this, a formula is derived and expressed in words as a generally valid rule. Underneath this, specimen calculations illustrate the principal variations of the application concerned. In conclusion, easy test exercises permit a rapid initial check on success.

The**EXERCISE SHEETS** provide problems of varying degrees of difficulty, often requiring the basic formula to be re-arranged.

Adapting to curriculum:
Depending on the structure of local curricula, the choice of topics should be suited to local needs. The selection deemed appropriate for the project must be duplicated locally to produce the number of copies required.

Reminder:
Whenever possible, comply with the following instructions concerning method:

- Ask pupils about the possible meaning of the key picture and the rule it symbolises!
- Obtain the participation of as many pupils as possible in the process of solving the exercises!
- Inform pupils of homework results, but check that they have understood the correct solution procedure!
- Use the accompanying specimen solutions in the teacher's copy as a means of comparison.

APPRENDRE SANS BARRIERE DE LANGUE

MATHEMATIQUES TECHNIQUES - METAL

Hermanns - Klemmstein

Particularitês:

Aucun exercice n'est accompagnê de texte. Les figures, les symboles et les chiffres ne nêcessitent pas de traduction.
Alors que les exemplaires destinê aux enseignants comportent encore des titres et des termes techniques, les êlêves inscrivent eux-mêmes dans les espaces prêvus â effet les expressions qui se prêsentent. L'enseignement se fait dans la langue du pays.
Sur les **FICHES D'INFORMATION**, le nouveau sujet abordê est annoncê par une figure-clê, dans un example typique d'application. Il faut en dêduire une formule que l'on retient littêralement comme règle. Plus bas, des exemples de calcul prêsentent les applications possibles les plus importantes. Ensuite, des exercices faciles permettent d'effectuer três rapidement un premier control de rêsultats.
Les **FICHES DE PROBLEMES** offrent des exercices de degrês de difficultê divers, obligeant souvent â transformer la formule fondamentale.

Rappel:
Respectez dans la mesure du possible les indications suivantes concernant la mêthode d'enseignement:

- Demandez aux êlêves la signification de la figure-clê et de la rêgle qu'elle reprêsente.
- Faites participer le plus grand nombre possible d'êlêves â la recherche des solutions de ces problêmes.
- Donnez aux êtudiants la solution des exercices qu'ils font â la maison. mais vêrifiez s'ils ont compris le raisonnement.
- Contrôlez en comparant avec les solutions types jointes â l'exemplaire pour enseignants.

A P R E N D E R   S I N   O B S T A C U L O S   D E   I D I O M A

MATEMATICAS EN LA TECNICA DEL METAL

Hermanns - Klemmstein

Características:

Todos los ejercicios se presentan sin texto. Los gráficos, símbolos y números del ejercicio no necesitan traducción alguna.
Mientras que en el ejemplar destinado al personal docente aparecen títulos y denominaciones técnicas, los alumnos escriben a mano las denominaciones que vayan apareciendo en las líneas en blanco que se encuentran en al ejemplar destinado al alumno. Las clases tienen lugar en el lenquaje corriente local.
En las **HOJAS INFORMATIVAS** se muestra a través de un gráfico clave el nuevo tema, en un ejemplo típico de aplicacíon. De allí habrá que deducir una fórmula, la cual se resumirá generalmente de modo verbal. Más abajo se presentan en ejemplos de cálculo las variantes más importantes de aplicación. Por fin, se consique en breve tiempo a través de problemas fáciles la verificación de resultados.

Las **HOJAS DE TRABAJO** presentan problemas de dificultad diferente, para los cuales habrá que adaptar frecuentemente la fórmula básica.

Atencion:

Procuren atenerse a las siguientes observaciones de carácter metódico:

- Pregunten Uds. a los alumnos por el posible significado del gráfico clave y de la regla impolicada en el mismo.
- Procuren que participe el mayor número posible de alumnos en la solución de los problemas.
- Comuniquen a los alumnos los resultados de las tareas de casa pero controlen si han comprendido el proceso de cálculo hasta llegar a la solución.
- Utilicen a título comparativo las soluciones modelo adjuntas del ejemplar para el personal docente.

Inhaltsverzeichnis

Contents

Sommaire

Indice

Informationsblätter Information sheets Fiches d'information Hojas informatives	Arbeitsblätter Work sheets Fiches de problémes Hojas de trabajo
1.1	1.2
2.1	2.2
3.1 .2	3.3
4.1	4.2
5.1	5.2
6.1	6.2
7.1	7.2 .3
8.1	8.2
9.1	9.2
10.1	10.2 .3
11.1 .2	11.3 .4
12.1	12.2
13.1	13.2
14.1 .2	14.3
15.1	15.2
16.1	16.2
17.1	17.2
18.1	18.2 .3
19.1	19.2
20.1	20.2
21.1 .2	21.3 .4
22.1	22.2 .3
23.1	23.2
24.1	24.2
25.1 .2	25.3 .4
26.1 .2	26.3 .4 .5
27.1	27.2
28.1	28.2
29.1	29.2 .3
30.1	30.2
31.1 .2 .3	31.4 .5
32.1 .2	32.3 .4
33.1 .2 .3	33.4 .5
34.1	34.2
35.1 .2 .3	35.4 .5
36.1	36.2 .3
37.1 .2	37.3 .4
38.1 .2	38.3
39.1 .2	39.3 .4
40.1 .2	40.3 .4
41.1 .2	41.3 .4
42.1 .2	42.3 .4
43.1	43.2
62	63

FACHBEGRIFFE - SUBJECT TERMINOLOGY

Thema-Nr.:		topic-No.:	
8	Teilung	8	pitch
	Teilzahl		index number
11	Ankathete		adjacent side
	Gegenkathete		opposite side
	Hypothenuse		hypotenuse
14	Größtmaß	14	maximum dimension
	Kleinstmaß		minimum dimension
20	Länge	20	lenght
	Breite		width
21	Grundfläche	21	base
	Höhe		height
24	Dichte	24	density
	Gewichtskraft		weight
26	Hebelarm	26	lever
28	Reibzahl	28	friction coefficient
29	Weg	29	distance
30	Steigung	30	pitch
	Axialkraft		axial force
31	Zeit	31	time
	Drehzahl		rotational speed
32	Eingangsleistung	32	power input
	Ausgangsleistung		power output
34	Seilkraft	34	cable force
35	Modul	35	module
	Zähnezahl		number of teeth
	Teilkreisdurchmesser		pitch diameter
	Achsabstand		centre distance
	treibende Räder		driving gears
	getriebene Räder		driven gears
37	Teilkreisumfang	37	circumf. of pitch circle
	Zahnstangenweg		gear rack travel
	Schneckenrad		worm gear
	Gangzahl		number of starts
38	Kegellänge	38	length of taper
	Kegelwinkel		angle of taper
	Einstellwinkel		setting angle
	Durchmesserdifferenz		diameter difference
40	Höchstkraft	40	max. force
	Querschnittsfläche		cross section
42	Scherfläche	42	shearing section

TERMES TECHNIQUES - TERMINOLOGIA TECNICA

Sujet N°:		Tema Nr:	
8	Division	8	Divisiōn
	Diviseur		Dividendo
11	Côté adjacent	11	Cateto
	Perpendiculaire opposé		Cateto opuesto
	Hypthénuse		Hipotenusa
14	Dimension maximale	14	Medida máxima
	Dimension minimale		Medida mīnima
20	Longueur	20	Longitud
	Largeur		Anchura
21	Surface de base	21	Superficie del baso
	Hauteur		Altura
24	Epaisseur	24	Densidad
	Poids		Fuerza por peso
26	Levier	26	Palanca
29	Trajectoire	29	Trayectoria
30	Pas	30	Paso
	Force axiale		Fuerza axial
31	Temps	31	Tiempo
	Nombre de tours		Nūmero de revoluc.
32	Puissance d'entrée	32	Potencia de entrada
	Puissance de sortie		Potencia de salida
34	Force exercée par la corde	34	Fuerza por cable
35	Module	35	Mōdulo
	Nombre de dents		Nūmero de dientes
	Diamètre primitif de référence		Diámetro del cīrculo primitivo
	Empattement		Distancia entre ejes
	Roues menantes		Ruedas de tracciōn
	Roues menées		Ruedas traccionadas
37	Circonférence primitive de référence	37	Perīmetro del cīrculo primitivo
	Trajectoire de la crémaillère		Via de la cremallera
	Roue vis		Rueda helicoidal
	Nombre de spires		Nūmero de filetes
39	Longueur de cône	39	Longitud del cono
	Angle de cône		Angulo del cono
	Angle de mise au point		Angulo de ajuste
	Différence de diamètre		Diferencia de diām.
40	Force maximale	40	Fuerza máxima
	Superficie de la coupe transversale		Superficie de la secciōn transversal
43	Section de cisaillement	43	Superficie de corte

(1) a) $48 - x = 19$

$x = 48 - 19$

$x = 29$

b) $1,5 = 4,83 - x$

$x = 4,83 - 1,5$

$x = 3,33$

(2) a) $30,48 - 12,44 - x = 9,92$

$x = 30,48 - 12,44 - 9,92$

$x = 8,12$

b) $x - 13,64 - 12,8 = 96,4$

$x = 96,4 + 13,64 + 12,8$

$x = 122,84$

(3) a) $4x + 12 = 32$

$4x = 32 - 12$

$4x = \frac{20}{4}$

$x = 5$

b) $80 - 2x = 68$

$2x = 80 - 68$

$x = \frac{12}{2}$

$x = 6$

(4) a) $420 - 44,28 = 280,1 + l$

$l = 420 - 44,28 - 280,1$

$l = 95,62$

b) $100,2 - L = 88,6$

$L = 100,2 - 88,6$

$L = 11,6$

(5) a) $\frac{5''}{8} + x = \frac{9''}{12}$

$x = \frac{9''}{12} - \frac{5''}{8}$

$x = \frac{1''}{8}$

b) $42\frac{3}{4}\,\text{ft} - x = 39\frac{2}{3}\,\text{ft}$

$x = 42\frac{3}{4}\,\text{ft} - 39\frac{2}{3}\,\text{ft}$

$x = 3\frac{1}{12}\,\text{ft}$

(6) a) $422,82\,\text{mm} - 2x = 311\,\text{mm}$

$2x = 422,82\,\text{mm} - 311\,\text{mm}$

$x = \frac{111,82\,\text{mm}}{2}$

$x = 55,91\,\text{mm}$

b) $x - 39,9\,\text{mm} = 60,21\,\text{mm}$

$x = 60,21\,\text{mm} + 39,9\,\text{mm}$

$x = 100,11\,\text{mm}$

(7) a) $\frac{d_1}{2} + \frac{d_2}{2} = a$

$\frac{d_1}{2} = a - \frac{d_2}{2}$

$d_1 = 2a - d_2$

b) $V = V_1 - V_2 + V_3$

$V_3 = V - V_1 + V_2$

(8) a) $a = \frac{d_1}{2} + d_2 + \frac{d_3}{2}$

$d_2 = a - \frac{d_1}{2} - \frac{d_3}{2}$

b) $A = A_1 + A_2 - A_3$

$A_3 = A_1 + A_2 - A$

2.2

(1) a) $\frac{5}{3}x = 12$

$x = \frac{12 \cdot 3}{5}$

$x = 7,2$

b) $9 = \frac{4x}{18}$

$x = \frac{9 \cdot 18}{4}$

$x = 40,5$

(2) a) $120 = \frac{4 \cdot 12}{x}$

$x = \frac{4 \cdot 12}{120}$

$x = 0,4$

b) $\frac{5}{x} = \frac{12}{18}$

$x = \frac{5 \cdot 18}{12}$

$x = 7,5$

(3) a) $100 = \frac{20 \cdot h}{3}$

$h = \frac{100 \cdot 3}{20}$

$h = 15$

b) $300 = \frac{A_m \cdot 50}{3}$

$A_m = \frac{300 \cdot 3}{50}$

$A_m = 18$

(4) a) $628 = \frac{d \cdot 3,14}{2}$

$d = \frac{628 \cdot 2}{3,14}$

$d = 400$

b) $\frac{1}{v_1} = \frac{5}{36}$

$v_1 = \frac{36}{5}$

$v_1 = 7,2$

(5) a) $v = d \cdot \pi \cdot n$

$n = \frac{v}{d \cdot \pi}$

b) $s = m \cdot z \cdot \pi$

$m = \frac{s}{z \cdot \pi}$

(6) a) $F \cdot 2\pi\, r = F_{ax} \cdot P$

$r = \frac{F_{ax} \cdot P}{F \cdot 2\pi}$

b) $i = \frac{z_2 \cdot z_4}{z_1 \cdot z_3}$

$z_1 = \frac{z_2 \cdot z_4}{i \cdot z_3}$

(7) a) $\frac{a}{b} = \frac{h}{l}$

$a \cdot l = h \cdot b$

$b = \frac{a \cdot l}{h}$

b) $W = \frac{F \cdot s}{t}$

$F = \frac{W \cdot t}{s}$

(8) a) $a = \frac{m}{2}(z_1 + z_2)$

$m = \frac{2a}{z_1 + z_2}$

b) $A = \frac{a + b}{2}\, h$

$a + b = \frac{2A}{h}$

$a = \frac{2A}{h} - b$

$\boxed{3.3}$

(1)

$5 \;---\; 200\ kg$
$3 \;---\; x\ kg$

$5 \;---\; 200\ kg$
$1 \;---\; \frac{200}{5}\ kg$
40
$3 \;---\; \frac{\cancel{200}\cdot 3}{\cancel{5}_1}\ kg$

$x = 120\ kg$

(2)

$42\ kg \;---\; 4\ m$
$32\ kg \;---\; x\ m$

$42\ kg \;---\; 4\ m$
$1\ kg \;---\; \frac{4}{42}\ m$
$32\ kg \;---\; \frac{4\cdot 32}{42}\ m$

$x = 3{,}05\ m$

(3)

$80\ l \;---\; 900\ km$
$50\ l \;---\; x\ km$

$80\ l \;---\; 900\ km$
$1\ l \;---\; \frac{900}{80}\ km$
$50\ l \;---\; \frac{900\cdot 50}{80}\ km$

$x = 562{,}5\ km$

(4)

$3 \;---\; 4\ h$
$4 \;---\; x\ h$

$3 \;---\; 4\ h$
$1 \;---\; \frac{4}{3}\ h$
$4 \;---\; \frac{\cancel{4}\cdot 3}{\cancel{4}}\ h$

$x = 3\ h$

(5)

$6 \;---\; 80\ t$
$9 \;---\; x\ t$

$6 \;---\; 80\ t$
$1 \;---\; \frac{80}{6}\ t$
$9 \;---\; \frac{80\cdot 9}{6}\ t$

$x = 120\ t$

(8)

$24 \;---\; 42\ h$
$18 \;---\; x\ h$

$24 \;---\; 42\ h$
$1 \;---\; 42\cdot 24\ h$
$18 \;---\; \frac{42\cdot 24}{18}\ h$

$x = 56\ h$

(7)

$32 \;---\; 48\ mm$
$36 \;---\; x\ mm$

$32 \;---\; 48\ mm$
$1 \;---\; \frac{48}{32}\ mm$
$36 \;---\; \frac{48\cdot 36}{32}\ mm$

$x = 54\ mm$

(6)

$3 \;---\; 2000\ h$
$2 \;---\; x\ h$

$3 \;---\; 2000\ h$
$1 \;---\; 2000\cdot 3\ h$
$2 \;---\; \frac{{}^{1}\cancel{2000}\cdot 3}{\cancel{2}_{1}}\ h$

$x = 3000\ h$

$\boxed{4.2}$

(1)

$\frac{x}{8m} = \frac{1\cancel{m}}{3\cancel{m}}$

$x = \frac{8}{3}\ m$

$x = 2{,}67\ m$

(2)

$\frac{x}{4{,}5m} = \frac{4\cancel{m}}{2\cancel{m}}$

$x = 2\cdot 4{,}5m$

$x = 9\ m$

$\boxed{4.2}$

(3)

$y = \frac{0{,}68m}{4}$

$y = 0{,}17\ m$

$\frac{x}{0{,}17mm} = \frac{1{,}2\cancel{m}}{0{,}68\cancel{m}}$

$x = \frac{1{,}2\cdot 0{,}17m}{0{,}68}$

$x = 0{,}30\ m$

(4)

$\frac{x}{100mm} = \frac{120\cancel{mm}}{200\cancel{mm}}$

$x = \frac{12\cdot 100mm}{20}$

$x = 60\ mm$

(5)

$\frac{1}{36mm} = \frac{120\cancel{mm}}{48\cancel{mm}}$

$1 = \frac{120\cdot 36mm}{48}$

$1 = = 90\ mm$

$x = = 120mm - 90mm$

$x = 30\ mm$

(6)

$\frac{x}{(250-120)mm} = \frac{160\cancel{mm}}{250\cancel{mm}}$

$x = \frac{16\cdot 130mm}{25}$

$x = 83{,}2\ mm$

7

$$\frac{1}{180\text{mm}} = \frac{42\cancel{0}\text{mm}}{28\cancel{0}\text{mm}}$$
$$1 = \frac{42 \cdot 180\text{mm}}{28}$$
$$1 = 270\ \text{mm}$$
$$x = 420\text{mm} - 270\text{mm}$$
$$\underline{\underline{x = 150\ \text{mm}}}$$

8

$$\frac{x}{200} = \frac{1}{2}$$
$$x = \frac{200}{2}$$
$$\underline{\underline{x = 100\ \text{mm}}}$$

$$\frac{y}{120\text{mm}} = \frac{100\cancel{\text{mm}}}{200\cancel{\text{mm}}}$$
$$y = \frac{120\text{mm}}{2}$$
$$\underline{\underline{y = 60\text{mm}}}$$

5.2

1

$$8\ \$ \mathrel{\hat{=}} 100\%$$
$$\underline{2\ \$ \mathrel{\hat{=}} x\%}$$
$$\frac{x}{100} \mathrel{\hat{=}} \frac{2}{8}$$
$$x \mathrel{\hat{=}} \frac{2 \cdot 100}{8}$$
$$\underline{\underline{x \mathrel{\hat{=}} 25\%}}$$

2

$$100\% \mathrel{\hat{=}} 12\ \$$$
$$\underline{30\% \mathrel{\hat{=}} x\ \$}$$
$$\frac{x}{12} \mathrel{\hat{=}} \frac{30}{100}$$
$$x \mathrel{\hat{=}} \frac{30 \cdot 12}{100}$$
$$\underline{\underline{x \mathrel{\hat{=}} 3{,}6\ \$}}$$

3

$$56\text{mm} \mathrel{\hat{=}} 100\%$$
$$\underline{24\text{mm} \mathrel{\hat{=}} x\%}$$
$$\frac{x}{100} \mathrel{\hat{=}} \frac{24}{56}$$
$$x \mathrel{\hat{=}} \frac{24 \cdot 100}{56}$$
$$\underline{\underline{x \mathrel{\hat{=}} 43\%}}$$

4

$$100\% \mathrel{\hat{=}} 8$$
$$\underline{25\% \mathrel{\hat{=}} x}$$
$$\frac{x}{8} \mathrel{\hat{=}} \frac{25}{100}$$
$$x \mathrel{\hat{=}} \frac{25 \cdot 8}{100}$$
$$\underline{\underline{x \mathrel{\hat{=}} 2}}$$

5

$$9000\ \$ \mathrel{\hat{=}} 100\%$$
$$\underline{8000\ \$ \mathrel{\hat{=}} x\%}$$
$$\frac{x}{100} \mathrel{\hat{=}} \frac{8000}{9000}$$
$$x \mathrel{\hat{=}} \frac{8000 \cdot 100}{9000}$$
$$\underline{\underline{x \mathrel{\hat{=}} 89\%}}$$

6

a)

$$112\% \mathrel{\hat{=}} 896\ \$$$
$$\underline{100\% \mathrel{\hat{=}} x\ \$}$$
$$\frac{x}{896} \mathrel{\hat{=}} \frac{100}{112}$$
$$x \mathrel{\hat{=}} \frac{100 \cdot 896}{112}$$
$$\underline{\underline{x \mathrel{\hat{=}} 800\ \$}}$$

b)

$$100\% \mathrel{\hat{=}} 800\ \$$$
$$\underline{12\% \mathrel{\hat{=}} y\ \$}$$
$$\frac{y}{800} \mathrel{\hat{=}} \frac{12}{100}$$
$$y \mathrel{\hat{=}} \frac{12 \cdot 800}{100}$$
$$\underline{\underline{y \mathrel{\hat{=}} 96\ \$}}$$

7

a)

$$6000\text{g} \mathrel{\hat{=}} 100\%$$
$$\underline{5700\text{g} \mathrel{\hat{=}} \text{Al}\%}$$
$$\frac{\text{Al}}{100} \mathrel{\hat{=}} \frac{5700}{6000}$$
$$\text{Al} \mathrel{\hat{=}} \frac{5700 \cdot 100}{6000}$$
$$\underline{\underline{\text{Al} \mathrel{\hat{=}} 95\%}}$$

b)

$$\text{Cu} \mathrel{\hat{=}} 100\% - 95\%$$
$$\underline{\underline{\text{Cu} \mathrel{\hat{=}} 5\%}}$$

8

$$122\% \mathrel{\hat{=}} 160\frac{\text{km}}{\text{h}}$$
$$\underline{100\% \mathrel{\hat{=}} x\frac{\text{km}}{\text{h}}}$$
$$\frac{x}{160} \mathrel{\hat{=}} \frac{100}{122}$$
$$x \mathrel{\hat{=}} \frac{100 \cdot 16}{122}$$
$$\underline{\underline{x \mathrel{\hat{=}} 131\frac{\text{km}}{\text{h}}}}$$

6.2

(1)
$\alpha = 90^\circ - 52^\circ$
$\alpha = 38^\circ$

(2)
$\beta = 90^\circ - 40^\circ 15'$
$\beta = 49^\circ 45' = 49{,}75^\circ$

$\alpha = 90^\circ + 49^\circ 45'$
$\alpha = 139^\circ 45' = 139{,}75^\circ$

(3)
$\alpha = 72^\circ - 65^\circ$
$\alpha = 7^\circ$

$\gamma = 90^\circ - 72^\circ$
$\gamma = 18^\circ$

(4)
$\alpha = 18^\circ$
$\beta = 108^\circ$
$\gamma = 132^\circ$

(5)
$\alpha = \frac{42^\circ}{2}$
$\alpha = 21^\circ$

$\beta = 90^\circ - 21^\circ$
$\beta = 69^\circ$

$\gamma = 180^\circ - 69^\circ$
$\gamma = 111^\circ$

(6)
$\alpha = 360^\circ - 120^\circ$
$\alpha = 240^\circ$

$\beta = 180^\circ - 60^\circ$
$\beta = 120^\circ$

(7)
$\beta = 90^\circ - 38^\circ - 8^\circ$
$\beta = 44^\circ$

(8)
$\alpha = 180^\circ - 70^\circ - 50^\circ$
$\alpha = 60^\circ$

$\gamma = \alpha$
$\gamma = 60^\circ$

$\beta = 180^\circ - 60^\circ - 70^\circ$
$\beta = 50^\circ$

7.2

(1)

	mm	cm	dm	m
a)	800	80	8	0,8
b)	4000	400	40	4
c)	120	12	1,2	0,12
d)	200	20	2	0,2

(2)

	in	ft	mm
a)	24	2	609,6
b)	3/8	1/32	9,525
c)	18	$1\frac{1}{2}$	457,2
d)	3/4	1/16	19,05
e)	4	1/3	101,6

(3)
$95\text{mm} + x + 120\text{mm} = 972\text{mm}$
$x = 972\text{mm} - 95\text{mm} - 120\text{mm}$
$x = 757\text{mm}$

(4)
$d + 2 \cdot 4\text{mm} = 128{,}2\text{mm}$
$d = 128{,}2\text{mm} - 8\text{mm}$
$d = 120{,}2\text{mm}$

(5)
$a = \frac{240\text{mm}}{2} + 160\text{mm} + \frac{200\text{mm}}{2}$
$a = 380\text{mm}$

(6)
$x + \frac{2''}{2} = 14{,}641\text{mm} + \frac{1''}{2}$
$x = 14{,}641\text{mm} + \frac{25{,}4\text{mm}}{2} - \frac{2 \cdot 25{,}4\text{mm}}{2}$
$x = 1{,}941\text{mm}$

(7)
$200\text{mm} + x = \frac{182\text{mm}}{2} + \frac{264\text{mm}}{2}$
$x = 91\text{mm} + 132\text{mm} - 200\text{mm}$
$x = 23\text{mm}$

(8)
$x + \frac{220\text{mm}}{2} = 130{,}8\text{mm}$
$x = 130{,}8\text{mm} - 110\text{mm}$
$x = 20{,}8\text{mm}$

$y + 355{,}7\text{mm} = 376{,}25\text{mm}$
$y = 376{,}25\text{mm} - 355{,}7\text{mm}$
$y = 20{,}55\text{mm}$

7.3

(9) $R = \frac{63,08mm}{2}$

$\underline{\underline{R = 31,54mm}}$

$x = 240,545mm - 2R$

$x = 240,545mm - 63,08mm$

$\underline{\underline{x = 177,465mm}}$

(10) $x = 244,2mm + \frac{72mm}{2} - \frac{412,4mm}{2}$

$\underline{\underline{x = 73,8mm}}$

(11) $x = 186mm + 28mm$

$\underline{\underline{x = 214mm}}$

$y = \frac{234,6mm - x}{2}$

$y = \frac{234,6mm - 214mm}{2}$

$\underline{\underline{y = 10,3mm}}$

(12) $x = \frac{56,7mm - 42,8mm}{2}$

$\underline{\underline{x = 6,95mm}}$

(13) $x = \frac{160,1mm - 40,2mm}{2}$

$\underline{\underline{x = 59,95mm}}$

(14)

$384mm + (412mm - x) = 672mm$

$384mm + 412mm - 672mm = x$

$\underline{\underline{x = 124mm}}$

(15)

$420mm = 56mm + 104mm + 8,2mm + x$

$x = 420mm - 56mm - 104mm - 8,2mm$

$\underline{\underline{x = 251,8mm}}$

(16) $12,56mm + x + 21,624mm = 52,482mm$

$x = 52,482mm - 12,56mm - 21,624mm$

$\underline{\underline{x = 18,298mm}}$

8.2

(1) $\underline{\underline{n = 8}}$

$L = p \cdot n$

$p = \frac{L}{n}$

$p = \frac{480mm}{8}$

$\underline{\underline{p = 60mm}}$

(2) $\underline{\underline{n = 10}}$

$L = p \cdot n$

$p = \frac{L}{n}$

$p = \frac{9mm}{10}$

$\underline{\underline{p = 0,9mm}}$

(3) $L = 24000mm$

$L = p \cdot n$

$n = \frac{L}{p}$

$n = \frac{24000\cancel{mm}}{200\cancel{mm}}$

$\underline{\underline{n = 120}}$

(4) $L = p \cdot n$

$p = \frac{L}{n}$

$p = \frac{25,4mm}{4}$

$\underline{\underline{p = 6,35mm}}$

(5) $L = 6400mm - 150mm - 250mm$

$L = 6000mm$

$\underline{\underline{n = 30}}$

$L = p \cdot n$

$p = \frac{L}{n}$

$p = \frac{6000mm}{30}$

$\underline{\underline{p = 200mm}}$

(6) $l = L + 12mm$

$l = 7 \cdot 20mm + 12mm$

$\underline{\underline{l = 152mm}}$

(7) $L = 2 \cdot 328mm + 2 \cdot 164m$

$L = 984mm$

$L = p \cdot n \quad ; \ \underline{\underline{n = 12}}$

$p = \frac{L}{n}$

$p = \frac{984mm}{12}$

$\underline{\underline{p = 82mm}}$

(8) $L = p \cdot n$

$p = \frac{L}{n}$

$p = \frac{63,5mm}{5}$

$\underline{\underline{p = 12,7mm = 1/2''}}$

9.2

(1)
$L = d \cdot \pi$

$L = 450mm \cdot 3,14$

$\underline{\underline{L = 1413\ mm}}$

(2)
$a = \frac{d \cdot \pi \cdot \alpha}{360^0}$

$a = \frac{400mm \cdot 3,14 \cdot 120^0}{360^0}$

$\underline{\underline{a = 418,7\ mm}}$

(3)
$L = d \cdot \pi + 1$

$L = 320mm \cdot 3,14 + 400mm$

$\underline{\underline{L = 1404,8\ mm}}$

(4)
$L = \frac{D \cdot \pi}{2} + \frac{d \cdot \pi}{2} + 1$

$L = \frac{360mm \cdot 3,14}{2} + \frac{200mm \cdot 3,14}{2}$

$+ 860mm$

$\underline{\underline{L = 1739,2\ mm}}$

(5)
$L = d \cdot \pi + 1$

$L = 160mm \cdot 3,14 + 2 \cdot 440mm + 2 \cdot 240mm$

$\underline{\underline{L = 1862,4\ mm}}$

(6)
$L = \frac{D \cdot \pi}{2} + \frac{d \cdot \pi}{2} + 1$

$L = \frac{440mm \cdot 3,14}{2} + \frac{200mm \cdot 3,14}{2}$

$+ 2 \cdot 150mm + 240mm$

$\underline{\underline{L = 1544,8\ mm}}$

(7)
$L = \frac{D \cdot \pi}{2} + \frac{d \cdot \pi}{2} + 1$

$L = \frac{500mm \cdot 3,14}{2} + \frac{300mm \cdot 3,14}{2} + 200mm$

$\underline{\underline{L = 1456\ mm}}$

(8)
$L = d \cdot \pi + 1_1 + 1_2$

$L = 160mm \cdot 3,14 + 2 \cdot 400mm + 2 \cdot 240mm$

$\underline{\underline{L = 1782,4\ mm}}$

10.2

10.2

(1)
$x^2 = a^2 + a^2$

$x^2 = 2a^2$

$x = a\sqrt{2}$

$x = 50\sqrt{2}$

$\underline{\underline{x = 70,7mm}}$

(3)
$r^2 = (\frac{s}{2})^2 + (\frac{r}{2})^2$

$(\frac{s}{2})^2 = \frac{3}{4}r^2$

$s = r\sqrt{3}$

$s = 30\sqrt{3}$

$\underline{\underline{s = 52mm}}$

(2)
$a^2 = h^2 + (\frac{a}{2})^2$

$h^2 = a^2 - \frac{a^2}{4}$

$h^2 = \frac{3}{4}a^2$

$h = \frac{a}{2}\sqrt{3}$

$h = \frac{40}{2}\sqrt{3}$

$\underline{\underline{h = 34,6mm}}$

(4)
a) $x^2 = a^2 + a^2$

$x^2 = 2a^2$

$x = a\sqrt{2}$

$x = 20\sqrt{2}$

$\underline{\underline{x}} = 28,3mm$

b) $y = \frac{x}{2}$

$y = \frac{28,2}{2}$

$\underline{\underline{y = 14,15mm}}$

(5)

$$x^2 = 30^2 + 40^2$$
$$x = \sqrt{30^2 + 40^2}$$
$$x = \sqrt{2500}$$
$$\underline{\underline{x = 50\,\text{mm}}}$$

(6) a) $\underline{\underline{x = 50\,\text{mm}}}$

b) $y = 50 - 43{,}3$

$$\underline{\underline{y = 6{,}7\,\text{mm}}}$$

(7)

$$s^2 = (2d)^2 + \left(\frac{d}{2}\right)^2$$
$$s^2 = 4d^2 + \frac{d^2}{4}$$
$$s = \frac{d}{2}\sqrt{17}$$
$$s = \frac{120}{2}\sqrt{17}$$
$$\underline{\underline{s = 247\,\text{mm}}}$$

10.3

(8)

$$r^2 = l^2 + (r - a)^2$$
$$l^2 = r^2 - (r - a)^2$$
$$l^2 = 30^2 - (30 - 6)^2$$
$$l^2 = 30^2 - 24^2$$
$$l = \sqrt{900 - 576}$$
$$l = \sqrt{324}$$
$$\underline{\underline{l}} = 18\,\text{mm}$$

(9)

$$x^2 = 400^2 + 250^2$$
$$x = \sqrt{400^2 + 250^2}$$
$$x = \sqrt{160000 + 62500}$$
$$x = \sqrt{222500}$$

$\boxed{222500 \ \sqrt{x} \ \ 471{,}699}$

$$\underline{\underline{x = 471{,}7\,\text{mm}}}$$

$\sqrt{22\,25\,00} = 471{,}6$

```
          16
8 7        625
           609
94 1        1600
             941
942 6        65900
             56556
              9344
```

(10)

$$460^2 = 350^2 + x^2$$
$$x^2 = 460^2 - 350^2$$
$$x = \sqrt{460^2 - 350^2}$$
$$x = \sqrt{211600 - 122500}$$
$$x = \sqrt{89100}$$

$\boxed{89100 \ \sqrt{x} \ \ 298{,}496}$

$$\underline{\underline{x = 298\,\text{mm}}}$$

$\sqrt{8\,91\,00} = 298{,}4$

```
        4
4 9     491
        441
58 8     5000
         4704
596 4     29600
          23856
           5744
```

(11)

$$620^2 = \left(\frac{b}{2}\right)^2 + 300^2$$
$$\left(\frac{b}{2}\right)^2 = 620^2 - 300^2$$
$$\frac{b}{2} = \sqrt{620^2 - 300^2}$$
$$\frac{b}{2} = \sqrt{384400 - 90000}$$
$$\frac{b}{2} = \sqrt{294400}$$

$\boxed{294400 \ \sqrt{x} \ \ 542{,}586}$

$$\frac{b}{2} = 542{,}6$$
$$\underline{\underline{b = 1085{,}2\,\text{mm}}}$$

$\sqrt{29\,44\,00} = 542{,}5$

```
          25
10 4      444
          416
108 2      2800
           2164
1084 5      63600
            54225
             9375
```

(12)

$x^2 = (60 + 50)^2 + (50 + 40)^2$

$x^2 = 110^2 + 90^2$

$x = \sqrt{110^2 + 90^2}$

$x = \sqrt{20200}$

$\boxed{20200 \quad x \quad 142{,}13}$

$\underline{\underline{x = 142{,}13\text{mm}}}$

$\sqrt{20200} = 142{,}1$

	1
2 4	102
	96
28 2	600
	564
284 1	3600
	2841
	759

(13)

$55^2 = x^2 + 25^2$

$x^2 = 55^2 - 25^2$

$x = \sqrt{55^2 - 25^2}$

$x = \sqrt{2400}$

$\boxed{2400 \quad \sqrt{x} \quad 48{,}989}$

$\underline{\underline{x = 49\text{mm}}}$

$\sqrt{2400} = 48{,}9$

	16
8 8	800
	704
96 9	9600
	8721
	879

(14)

$400^2 = 320^2 + x^2$

$x^2 = 400^2 - 320^2$

$x = \sqrt{400^2 - 320^2}$

$x = \sqrt{57600}$

$\boxed{57600 \quad \sqrt{x} \quad 240}$

$\underline{\underline{x = 240 \text{ mm}}}$

$\sqrt{57600} = 240$

	4
4 4	176
	176
	0

(15)

$F^2 = 80^2 + 120^2$

$F = \sqrt{80^2 + 120^2}$

$F = \sqrt{6400 + 14400}$

$F = \sqrt{20800}$

$\boxed{20800 \quad \sqrt{x} \quad 144{,}22}$

$\underline{\underline{F = 144\text{N}}}$

$\sqrt{20800} = 144,$

	1
2 4	108
	96
28 4	1200
	1136
288 2	6400
	5764
	636

(16)

$x^2 = 800^2 + 1200^2$

$x = \sqrt{800^2 + 1200^2}$

$x = \sqrt{640000 + 1440000}$

$x = \sqrt{2080000}$ (wie (15))

$\boxed{2080000 \quad \sqrt{x} \quad 1442{,}2}$

$\underline{\underline{x = 1442\text{mm}}}$

$\boxed{11.3}$ $\boxed{11.3}$

(1) $\sin\alpha = \frac{2{,}5\cancel{m}}{12\cancel{m}}$

$\sin\alpha = 0{,}208333$

$\underline{\underline{\alpha = 12^\circ}}$

(2) $\sin 42^\circ = \frac{x}{8m}$

$x = 8m \cdot \sin 42^\circ$

$\underline{\underline{x = 5{,}353\ m}}$

$\cos 42^\circ = \frac{y}{8m}$

$y = 8m \cdot \cos 42^\circ$

$\underline{\underline{y = 5{,}95m}}$

(3) $\cos\alpha = \frac{280\cancel{mm}}{420\cancel{mm}}$

$\cos\alpha = 0{,}666667$

$\underline{\underline{\alpha = 48{,}19^\circ}}$

(4) $\sin 21^\circ = \frac{x}{2 \cdot 100mm}$

$x = 200mm \cdot \sin 21^\circ$

$\underline{\underline{x = 71{,}67\ mm}}$

(5) $\sin 40^\circ = \frac{G}{2 \cdot F_2}$

$F_1 = F_2 = \frac{G}{2 \cdot \sin 40^\circ}$

$F_1 = F_2 = \frac{10kN}{2 \cdot \sin 40^\circ}$

$\underline{\underline{F_1 = F_2 = 7{,}78\ kN}}$

(6) $\sin 5^\circ = \frac{x}{100mm}$

$x = 100mm \cdot \sin 5^\circ$

$x = 8{,}72\ mm$

$D = 80mm + 2 \cdot 8{,}72mm$

$\underline{\underline{D = 97{,}44\ mm}}$

(7) $\cos 48^\circ = \frac{800mm - 240mm}{x}$

$x = \frac{560mm}{\cos 48^\circ}$

$\underline{\underline{x = 836{,}9\ mm}}$

$\sin 48^\circ = \frac{y}{x}$

$y = x \cdot \sin 48^\circ$

$y = 836{,}9mm \cdot \sin 48^\circ$

$\underline{\underline{y = 621{,}9\ mm}}$

(8) $\sin 59^\circ = \frac{10mm}{x}$

$x = \frac{10mm}{\sin 59^\circ}$

$\underline{\underline{x = 11{,}7\ mm}}$

$\boxed{11.4}$

(9) $\cos\alpha = \frac{280\cancel{mm}}{340\cancel{mm}}$

$\underline{\underline{\alpha = 34{,}6^\circ}}$

$\sin = \frac{x}{340mm}$

$x = 340mm \cdot \sin 34{,}6^\circ$

$\underline{\underline{x = 193mm}}$

(10) $\cos 24^\circ = \frac{600N}{F}$

$F = \frac{600N}{\cos 24^\circ}$

$\underline{\underline{F = 657N}}$

(11) $\cos 16^\circ = \frac{18mm}{x}$

$x = \frac{18mm}{\cos 16^\circ}$

$\underline{\underline{x = 18{,}7mm}}$

(12) $\cos 16^\circ = \frac{F_n}{G}$

$F_n = G \cdot \cos 16^\circ$

$F_n = 800N \cdot \cos 16^\circ$

$\underline{\underline{F_n = 769N}}$

(13) $\sin 18^\circ = \frac{F}{8000N}$

$F = 8000N \cdot \sin 18^\circ$

$\underline{\underline{F = 2472N}}$

(14) $F = G \cdot \sin\alpha$

$G = \frac{F}{\sin\alpha}$

$G = \frac{1200N}{\sin 20^\circ}$

$\underline{\underline{G = 3509N}}$

(15) $\sin 48^\circ = \frac{x}{280mm}$

$x = 280mm \cdot \sin 48^\circ$

$\underline{\underline{x = 208mm}}$

(16) $\sin 30^\circ = \frac{x}{R}$

$x = R \cdot \sin 30^\circ$

$x = 30mm \cdot \frac{1}{2}$

$\underline{\underline{x = 15mm}}$

12.2

(1)
$$\tan\alpha = \frac{2\cancel{m}}{3{,}6\cancel{m}}$$
$$\tan\alpha = 0{,}55555$$
$$\alpha = 29{,}1^\circ$$

(2)
$$\tan 48^\circ = \frac{x}{3{,}6\,\text{m}}$$
$$x = 3{,}6\,\text{m} \cdot \tan 48^\circ$$
$$x = 4\ \text{m}$$

(3)
$$\tan 16^\circ = \frac{D}{2 \cdot 400\,\text{mm}}$$
$$D = 800\,\text{mm} \cdot \tan 16^\circ$$
$$D = 229\ \text{mm}$$

(4)
$$\tan\alpha = \frac{100\cancel{mm}}{160\cancel{mm}}$$
$$\tan\alpha = 0{,}625$$
$$\alpha = 32^\circ$$

(5)
$$\tan\frac{\alpha}{2} = \frac{30\,\text{mm}}{160\,\text{mm}}$$
$$\tan\frac{\alpha}{2} = 0{,}1875$$
$$\frac{\alpha}{2} = 10{,}62^\circ$$
$$\alpha = 21{,}24^\circ$$

(6)
$$\tan 30^\circ = \frac{200\,\text{mm}}{x}$$
$$x = \frac{200\,\text{mm}}{\tan 30^\circ}$$
$$x = 346{,}4\ \text{mm}$$

(7)
$$\tan 32^\circ = \frac{F_2}{F_1}$$
$$F_1 = \frac{F_2}{\tan 32^\circ}$$
$$F_1 = \frac{8\,\text{kN}}{\tan 30^\circ}$$
$$F_1 = 12{,}8\ \text{kN}$$

(8)
$$\tan 59^\circ = \frac{12\,\text{mm}}{x}$$
$$x = \frac{12\,\text{mm}}{\tan 59^\circ}$$
$$x = 7{,}21\ \text{mm}$$

13.2

(1)
$$L = d \cdot \pi$$
$$L = 42\,\text{mm} \cdot \pi$$
$$L = 132\ \text{mm}$$

(2)
$$L = \frac{d \cdot \pi \cdot 34\cancel{8^\circ}}{36\cancel{0^\circ}}$$
$$L = \frac{47\,\text{mm} \cdot \pi \cdot 34}{36}$$
$$L = 139\ \text{mm}$$

(3)
$$L = \frac{d \cdot \pi}{2} + l$$
$$L = \frac{36\,\text{mm} \cdot \pi}{2} + 70\,\text{mm}$$
$$L = 127\ \text{mm}$$

(4)
$$L = d \cdot \pi$$
$$L = 136\,\text{mm} \cdot \pi$$
$$L = 427\ \text{mm}$$

(5)
$$L = \frac{d \cdot \pi \cdot 3}{4} + l_1 + l_2$$
$$L = \frac{30\,\text{mm} \cdot \pi \cdot 3}{4} + 80\,\text{mm} + 50\,\text{mm}$$
$$L = 201\ \text{mm}$$

(6)
$$L = d \cdot \pi + l$$
$$L = 180\,\text{mm} \cdot 3{,}14 + 100\,\text{mm}$$
$$L = 665{,}2\ \text{mm}$$

(7)
$$L = \frac{d \cdot \pi \cdot 2}{3} + l$$
$$L = \frac{48\,\text{mm} \cdot \pi \cdot 2}{3} + 400\,\text{mm}$$
$$L = 500\ \text{mm}$$

(8)
$$L = \frac{d \cdot \pi \cdot 3}{4} + l_1 + l_2$$
$$L = \frac{140\,\text{mm} \cdot \pi \cdot 3}{4} + 130\,\text{mm} + 210\,\text{mm}$$
$$L = 670\ \text{mm}$$

(1) $ei = -0{,}2mm$

$T = es - ei$

$T = +0{,}1mm - (-0{,}2)mm$

$T = 0{,}3mm$

(2) $D_{max} = 49{,}98mm$

$D_{min} = 49{,}94mm$

(3) $D_{max} = 12{,}027mm$

$T = ES - EI$

$T = 0{,}027mm - 0$

$T = 0{,}027mm$

(4) $T = es - ei$

$T = -0{,}009mm - (-0{,}025)mm$

$T = 0{,}016mm$

$d_{max} = 49{,}991mm$

(5) $T = d_{max} - d_{min}$

$T = 41{,}85mm - 40{,}9mm$

$T = 0{,}95mm$

$d_{min} = 40{,}9mm$

(6) $T = ES - EI$

$T = +0{,}05mm - (-0{,}05)mm$

$T = 0{,}1mm$

$D_{min} = 39{,}95mm$

(7) $l_{max} = 18{,}1mm + 20{,}025mm + 18{,}1mm$

$l_{max} = 56{,}225mm$

$l_{min} = 17{,}8mm + 20{,}000mm + 17{,}8mm$

$l_{min} = 55{,}6mm$

(8) $L_{max} = 100{,}0mm - 19{,}8mm - 19{,}8mm$

$L_{max} = 60{,}4mm$

$L_{min} = 99{,}08mm - 20{,}2mm - 20{,}2mm$

$L_{min} = 59{,}58\ mm$

15.2

(1) $\Delta t = t_2 - t_1$

$\Delta t = 60°C - (-15)°C$

$\Delta t = 75K$

$\Delta l = l_0 \cdot \alpha \cdot \Delta t$

$\Delta l = 16m \cdot 0{,}000012 \frac{1}{\cancel{K}} \cdot 75\cancel{K}$

$\Delta l = 0{,}0144m = 14{,}4mm$

(2) $\Delta t = t_2 - t_1$

$\Delta t = 50°C - (-20)°C$

$\Delta t = 70K$

$\Delta l = l_0 \cdot \alpha \cdot \Delta t$

$\Delta l = 20mm \cdot 0{,}000012 \frac{1}{\cancel{K}} \cdot 70\cancel{K}$

$\Delta l = 0{,}0168m = 16{,}8mm$

(3) $\Delta t = t_2 - t_1$

$\Delta t = 50°C - (-20)°C$

$\Delta t = 70K$

$\Delta l = l_0 \cdot \alpha \cdot \Delta t$

$\Delta l = 60m \cdot 0{,}000012 \frac{1}{\cancel{K}} \cdot 70\cancel{K}$

$\Delta l = 0{,}0504m = 50{,}4mm$

(4) $\Delta l = l_0 \cdot \alpha \cdot \Delta t$

$\Delta t = \frac{\Delta l}{l_0 \cdot \alpha}$

$\Delta t = \frac{3{,}2\cancel{mm} \cdot K}{4000\cancel{mm} \cdot 0{,}000012}$

$\Delta t = 66{,}7K$

$\Delta t = t_2 - t_1$

$t_2 = \Delta t + t_1$

$t_2 = 66{,}7K + 20°C$

$t_2 = 86{,}7°C$

(5) $\Delta l = l_0 \cdot \alpha \cdot \Delta t$

$\Delta l = 82m \cdot 0{,}000012 \frac{1}{\cancel{K}} \cdot 200\cancel{K}$

$\Delta l = 0{,}197m = 197mm$

(6) $\Delta t = t_2 - t_1$

$\Delta t = 80°C - 20°C$

$\Delta t = 60K$

$\Delta l = l_0 \cdot \alpha \cdot \Delta t$

$\Delta l = 420mm \cdot 0{,}000012 \frac{1}{\cancel{K}} \cdot 60\cancel{K}$

$\Delta l = 0{,}302mm$

(7)
$\Delta t = t_2 - t_1$
$\Delta t = 20^oC - 180^oC$
$\Delta t = -160K$

$\Delta l = l_0 \cdot \alpha \cdot \Delta t$
$\Delta l = 100mm \cdot 0{,}000012 \frac{1}{\cancel{K}} \cdot (-160)\cancel{K}$
$\Delta l = -0{,}192mm$

$d = 100mm + - \Delta l$
$d = 100mm - 0{,}192mm$
$\underline{\underline{d = 99{,}808\ mm}}$

(8)
$\Delta l = l_0 \cdot \alpha \cdot \Delta t$
$\Delta t = \frac{\Delta l}{l_0 \cdot \alpha}$
$\Delta t = \frac{0{,}080mm\ K}{40{,}025mm \cdot 0{,}000012}$
$\underline{\underline{\Delta t = 167K}}$

$\Delta t = t_2 - t_1$
$t_2 = \Delta t + t_1$
$t_2 = 167^oC + 20^oC$
$\underline{\underline{t_2 = 187^oC}}$

(1)
$A = a \cdot b$
$A = 40cm \cdot 30cm$
$\underline{\underline{A = 1200\ cm^2}}$

(2)
$A = m \cdot h$
$m = \frac{a + b}{2}$
$m = \frac{500mm + 200mm}{2}$
$m = 350\ mm$
$A = 350mm \cdot 250mm$
$\underline{\underline{A = 87500\ mm^2 = 875cm^2}}$

(3)
$A = a \cdot h$
$A = 0{,}5m \cdot 0{,}25m$
$\underline{\underline{A = 0{,}125\ m^2}}$

(4)
$A = \frac{a \cdot h}{2}$
$A = \frac{4dm \cdot 3dm}{2}$
$\underline{\underline{A = 6\ dm^2}}$

(5)
$a \cdot b = 300^2\ mm^2$
$a = \frac{300^2\ mm^2}{b}$
$a = \frac{300^2\ mm^{\cancel{2}}}{250\cancel{mm}}$
$\underline{\underline{a = 360\ mm}}$

(6)
$A = \frac{a \cdot h}{2}$
$h = \frac{2 \cdot A}{a}$
$h = \frac{2 \cdot 787{,}5\ cm^{\cancel{2}}}{45\cancel{cm}}$
$\underline{\underline{h = 35\ cm = 350\ mm}}$

(7)
$a \cdot 400mm = \frac{800mm \cdot 900mm}{2}$
$a = \frac{800mm \cdot 900\cancel{mm}}{2 \cdot 400\cancel{mm}}$
$\underline{\underline{a = 900\ mm}}$

(8)
$A = m \cdot h$
$m = \frac{A}{h}$
$m = \frac{1710cm^{\cancel{2}}}{36\cancel{cm}}$
$\underline{\underline{m = 47{,}5\ cm = 475\ mm}}$

$m = \frac{a + b}{2}$
$2m = a + b$
$b = 2m - a$
$b = 2 \cdot 475mm - 600mm$
$\underline{\underline{b = 350\ mm}}$

17.2

(1)
$A = \frac{d^2 \cdot \pi}{4}$
$A = \frac{420^2 mm^2 \cdot 3{,}14}{4}$
$\underline{\underline{A = 138474\ mm^2}}$

(2)
$A = \frac{d^2 \cdot \pi}{4} \cdot \frac{\cancel{60^o}}{\cancel{360^o}\ 60}$
$A = \frac{380^2 mm^2 \cdot 3{,}14}{4 \cdot 60}$
$\underline{\underline{A = 18892\ mm^2 = 18\ 892\ cm^2}}$

(3)
$A = \frac{D^2 \cdot \pi}{4} - \frac{d^2 \cdot \pi}{4}$
$A = \frac{44^2 cm^2 \cdot 3{,}14}{4} - \frac{30^2 cm^2 \cdot 3{,}14}{4}$
$\underline{\underline{A = 813{,}26\ cm^2}}$

(4)
$a^2 = \frac{d^2 \cdot \pi}{4}$
$\frac{4a^2}{\pi} = d^2$
$d = \sqrt{\frac{4a^2}{\pi}}$
$d = \frac{2a}{\sqrt{\pi}}$
$\underline{\underline{d = 451{,}5mm}}$

(5)
$A = \frac{d^2 \pi}{4}$
$\frac{4A}{\pi} = d^2$
$d = \sqrt{\frac{4A}{\pi}}$
$d = \sqrt{\frac{4 \cdot 803{,}84cm^2}{\pi}}$
$\underline{\underline{d = 32cm = 320mm}}$

(6)
$\frac{d^2 \pi}{\cancel{4}} = \frac{D^2 \pi}{\cancel{4}} - \frac{x^2 \pi}{\cancel{4}}$
$x^2 = D^2 - d^2$
$x = \sqrt{D^2 - d^2}$
$x = \sqrt{500mm^2 - 400mm^2}$
$\underline{\underline{x = 300mm}}$

17.2

(7) $A = \frac{D^2 \cdot \pi}{4} - \frac{d^2 \cdot \pi}{4}$

$A + \frac{d^2 \cdot \pi}{4} = \frac{D^2 \cdot \pi}{4}$

$\frac{4A}{\pi} + d^2 = D^2$

$D = \sqrt{\frac{4A}{\pi} + d^2}$

$D = \sqrt{\frac{4 \cdot 1275{,}63 cm^2}{3{,}14} + 20^2 cm^2}$

$\underline{\underline{D = 45 cm = 450 mm}}$

(8) $A = \left(\frac{D^2 \cdot \pi}{4} - \frac{d^2 \cdot \pi}{4} \right) \frac{260^0}{360^0}$

$A = \left(\frac{50^2 cm^2 \cdot 3{,}14}{4} - \frac{29^2 cm^2 \cdot 3{,}14}{4} \right) \cdot \frac{260}{360}$

$\underline{\underline{A = 941 cm^2}}$

17.2

18.2

(1) $A = A_1 + A_2 + A_3$

$A_1 = 15 cm \cdot 30 cm$

$A_1 = 450 cm^2$

$A_2 = 15 cm \cdot 15 cm$

$A_2 = 225 cm^2$

$A_3 = 10 cm \cdot 20 cm$

$A_3 = 200 cm^2$

$A = 450 cm^2 + 225 cm^2 + 200 cm^2$

$\underline{\underline{A = 875 cm^2}}$

(2) $A = A_1 - A_2$

$A_1 = m \cdot h$

$A_1 = 45 cm \cdot 30 cm$

$A_1 = 1350 cm^2$

$A_2 = 20 cm \cdot 15 cm$

$A_2 = 300 cm^2$

$A = 1350 cm^2 - 300 cm^2$

$\underline{\underline{A = 1050 cm^2}}$

(3) $A = A_1 - A_2$

$A_1 = m \cdot h$

$A_1 = 48 cm \cdot 30 cm$

$A_1 = 1440 cm^2$

$A_2 = 5 cm \cdot 30 cm$

$A_2 = 150 cm^2$

$A = 1440 cm^2 - 150 cm^2$

$\underline{\underline{A = 1290 cm^2}}$

(4) $A = A_1 - A_2$

$A_1 = 5{,}4 dm \cdot 3{,}2 dm$

$A_1 = 17{,}28 dm^2$

$A_2 = \frac{1{,}4^2 dm^2 \cdot 3{,}14}{4}$

$A_2 = 1{,}54 dm^2$

$A = 17{,}28 dm^2 - 1{,}54 dm^2$

$\underline{\underline{A = 15{,}74 dm^2}}$

(5) $A = A_1 - A_2 - A_3$

$A_1 = 36 cm \cdot 42 cm$

$A_1 = 1512 cm^2$

$A_2 = 24 cm \cdot 24 cm$

$A_2 = 576 cm^2$

$A_3 = 10 cm \cdot 5 cm$

$A_3 = 50 cm^2$

$A = 1512 cm^2 - 576 cm^2 - 50 cm^2$

$\underline{\underline{A = 886 cm^2}}$

(6) $A = A_1 - A_2 - A_3$

$A_1 = 50 cm \cdot 30 cm$

$A_1 = 1500 cm^2$

$A_2 = 20 cm \cdot 10 cm$

$A_2 = 200 cm^2$

$A_3 = 10 cm \cdot 8 cm$

$A_3 = 80 cm^2$

$A = 1500 cm^2 - 200 cm^2 - 80 cm^2$

$\underline{\underline{A = 1220 cm^2}}$

(7) $A = A_1 - A_2$

$A_1 = 40 cm \cdot 20 cm$

$A_1 = 800 cm^2$

$A_2 = 10^2 cm^2 \cdot 0{,}215 \cdot (0{,}215 = 1 - \frac{\pi}{4})$

$A_2 = 21{,}5 cm^2$

$A = 800 cm^2 - 21{,}5 cm^2$

$\underline{\underline{A = 778{,}5 cm^2}}$

(8) $A = A_1 + A_2$

$A_1 = 40 cm \cdot 16 cm$

$A_1 = 640 cm^2$

$A_2 = \left(\frac{D^2 \pi}{4} - \frac{d^2 \pi}{4} \right) \cdot \frac{1}{2}$

$A_2 = (D^2 - d^2) \frac{\pi}{8}$

$A_2 = (36^2 - 20^2) cm^2 \cdot \frac{3{,}14}{8}$

$A_2 = 351{,}68 cm^2$

$A = 640 cm^2 + 351{,}68 cm^2$

$\underline{\underline{A = 991{,}68 cm^2}}$

18.2

18.3

(9) $A = A_1 - A_2 - A_3$

$A_1 = 5dm \cdot 4dm$

$A_1 = 20dm^2$

$A_2 = 1,1dm \cdot 2dm$

$A_2 = 2,2dm^2$

$A_3 = 2^2dm^2 \cdot \frac{\pi}{4}$

$A_3 = 3,14dm^2$

$A = 20dm^2 - 2,2dm^2 - 3,14dm^2$

$\underline{\underline{A = 14,66dm^2}}$

(10) $A = A_1 - A_2 - A_3$

$A_1 = 0,37m \cdot 0,57m$

$A_1 = 0,2109m^2$

$A_2 = 0,23m \cdot 0,42m \cdot \frac{1}{2}$

$A_2 = 0,0483m^2$

$A_3 = 0,3^2m^2 \cdot \frac{\pi}{4 \cdot 2}$

$A_3 = 0,03533m^2$

$A = 0,2109m^2 - 0,0483m^2 - 0,03533m^2$

$\underline{\underline{A = 0,12725m^2}}$

(11) $A = A_1 + A_2 - A_3$

$A_1 = 4,5dm \cdot 3,2dm$

$A_1 = 14,4dm^2$

$A_2 = \frac{4,5^2dm^2 \cdot 3,14}{4 \cdot 2}$

$A_2 = 7,95dm^2$

$A_3 = \frac{2,5^2dm^2 \cdot 3,14}{4}$

$A_3 = 4,9006dm^2$

$A = 14,4dm^2 + 7,95dm^2 - 4,9006dm^2$

$\underline{\underline{A = 17,45dm^2}}$

(12) $A = A_1 - A_2 - A_3$

$A_1 = 3,8dm \cdot 5,5dm$

$A_1 = 20,9dm^2$

$A_2 = 1,3dm \cdot 1,3dm \cdot 2$

$A_2 = 3,38dm^2$

$A_3 = 1dm \cdot 1dm + 1,2^2dm^2 \cdot \frac{3,14}{4}$

$A_3 = 2,33dm^2$

$A = 20,9dm^2 - 3,38dm^2 - 2,33dm^2$

$\underline{\underline{A = 15,19dm^2}}$

(13) $A = A_1 - A_2 + A_3$

$A_1 = 2dm \cdot 4dm$

$A_1 = 8dm^2$

$A_2 = 1,8dm \cdot 0,8dm$

$A_2 = 1,44dm^2$

$A_3 = 0,8^2dm^2 \cdot 0,215 \cdot \frac{1}{2}$

$A_3 = 0,0688dm^2$

$A = 8dm^2 - 1,44dm^2 + 0,0688dm^2$

$\underline{\underline{A = 6,63dm^2}}$

(14) $A = A_1 - A_2$

$A_1 = 1,6dm \cdot 1dm$

$A_1 = 1,6dm^2$

$A_2 = \frac{1dm^2 \cdot 3,14}{4 \cdot 2}$

$A_2 = 0,3925dm^2$

$A = 0,3925dm^2 - 0,3925dm^2$

$\underline{\underline{A = 1,2075dm^2}}$

(15) $A = A_1 - A_2 - A_3$

$A_1 = 4dm \cdot 3dm$

$A_1 = 12dm^2$

$A_2 = \frac{0,4^2dm^2 \cdot 3,14}{4} \cdot 4$

$A_2 = 0,5024dm^2$

$A_3 = 0,2^2dm^2 \cdot 2$

$A_3 = 0,08dm^2$

$A = 12dm^2 - 0,5024dm^2 - 0,08dm^2$

$\underline{\underline{A = 11,42dm^2}}$

(16) $A = A_1 - A_2$

$A_1 = \frac{1,8dm + 1,2dm}{2} \cdot 1,4dm$

$A_1 = 2,1\ dm^2$

$A_2 = 0,6dm \cdot 1dm$

$A_2 = 0,6dm^2$

$A = 2,1\ dm^2 - 0,6dm^2$

$\underline{\underline{A = 1,5\ dm^2}}$

19.2

(1)

$$A = \frac{d^2 \cdot \pi}{4}$$

$$A = \frac{40^2 cm^2 \cdot 3{,}14}{4}$$

$$A = 1256 cm^2$$

$$A_1 = 40cm \cdot 40cm$$

$$A_1 = 1600 cm^2$$

$$A_2 = A_1 - A$$

$$A_2 = 1600 cm^2 - 1256 cm^2$$

$$A_2 = 344 cm^2$$

$$A_{2\%} = \frac{A_2 \cdot 100}{A_1}$$

$$A_{2\%} = \frac{344 \cancel{cm^2} \cdot 100}{1600 \cancel{cm^2}}$$

$$A_{2\%} = 21{,}5\%$$

(2)

$$A_2 = \frac{15cm \cdot 20cm}{2} + \frac{30cm \cdot 20cm}{2}$$

$$A_2 = 450 cm^2$$

$$A_1 = 30cm \cdot 50cm$$

$$A_1 = 1500 cm^2$$

$$A = A_1 - A_2$$

$$A = 1500 cm^2 - 450 cm^2$$

$$A = 1050 cm^2$$

$$A_{2\%} = \frac{A_2 \cdot 100}{A_1}$$

$$A_{2\%} = \frac{450 \cancel{cm^2} \cdot 100}{1500 \cancel{cm^2}}$$

$$A_{2\%} = 30\%$$

(3)

$$A_2 = \frac{40cm + 50cm}{2} \cdot 10cm$$

$$A_2 = 450 cm^2$$

$$A_1 = 30cm \cdot 60cm$$

$$A_1 = 1800 cm^2$$

$$A = A_1 - A_2$$

$$A = 1800 cm^2 - 450 cm^2$$

$$A = 1350 cm^2$$

$$A_{2\%} = \frac{A_2 \cdot 100}{A_1}$$

$$A_{2\%} = \frac{450 \cancel{cm^2} \cdot 100}{1800 \cancel{cm^2}}$$

$$A_{2\%} = 25\%$$

(4)

$$A_2 = \frac{20cm \cdot 35cm}{2} + \frac{36^2 cm^2 \cdot 3{,}14}{4 \cdot 4}$$

$$A_2 = 350 cm^2 + 254{,}34 cm^2$$

$$A_2 = 604{,}34 cm^2$$

$$A_{2\%} = 34{,}5\%$$

$$A_1 = 50cm \cdot 35cm$$

$$A_1 = 1750 cm^2$$

$$A = A_1 - A_2$$

$$A = 1750 cm^2 - 604{,}34 cm^2$$

$$A = 1146{,}6 cm^2$$

(5)

$$A_1 = 60cm \cdot 35cm$$

$$A_1 = 2100 cm^2$$

$$A_2 = d^2 \cdot 0{,}215$$

$$A_2 = 28^2 cm^2 \cdot 0{,}215$$

$$A_2 = 169 cm^2$$

$$A = A_1 - A_2$$

$$A = 2100 cm^2 - 169 cm^2$$

$$A = 1931 cm^2$$

$$A_{2\%} = \frac{A_2 \cdot 100}{A_1}$$

$$A_{2\%} = \frac{169 \cancel{cm^2} \cdot 100}{2100 \cancel{cm^2}}$$

$$A_{2\%} = 8\%$$

(6)

$$A_1 = 42cm \cdot 41cm$$

$$A_1 = 1722 cm^2$$

$$A = 42cm \cdot 20cm + \frac{42^2 cm^2 \cdot 3{,}14}{2 \cdot 4} - \frac{26^2 cm^2 \cdot 3{,}14}{4}$$

$$A = 1002 cm^2$$

$$A_2 = A_1 - A$$

$$A_2 = 1722 cm^2 - 1002 cm^2$$

$$A_2 = 720 cm^2$$

$$A_{2\%} = \frac{A_2 \cdot 100}{A_1}$$

$$A_{2\%} = \frac{720 \cancel{cm^2} \cdot 100}{1722 \cancel{cm^2}}$$

$$A_{2\%} = 42\%$$

(7)

$$A_2 = \frac{26^2 cm^2 \cdot 3{,}14}{2 \cdot 4} + 22cm \cdot 16cm \cdot \frac{1}{2}$$

$$A_2 = 441 cm^2$$

$$A_1 = 38cm \cdot 56cm$$

$$A_1 = 2128 cm^2$$

$A = A_1 - A_2$

$A = 2128cm^2 - 441cm^2$

$\underline{\underline{A = 1687cm^2}}$

$A_{2\%} = \frac{A_2 \cdot 100}{A_1}$

$A_{2\%} = \frac{441\cancel{cm^2} \cdot 100}{2128\cancel{cm^2}}$

$\underline{\underline{A_{2\%} = 20,7\%}}$

(8)

$A_1 = 32cm \cdot 52cm$

$\underline{\underline{A_1 = 1664cm^2}}$

$A = 31cm \cdot 26cm + \frac{26^2cm^2 \cdot 3,14}{2 \cdot 4}$

$\underline{\underline{A = 1071cm^2}}$

$A_2 = A_1 - A$

$A_2 = 1664cm^2 - 1071cm^2$

$\underline{\underline{A_2 = 593cm^2}}$

$A_{2\%} = \frac{A_2 \cdot 100}{A_1}$

$A_{2\%} = \frac{593\cancel{cm^2} \cdot 100}{1664\cancel{cm^2}}$

$\underline{\underline{A_{2\%} = 36\%}}$

20.2

20.2

(1) $V = a \cdot b \cdot c$

$V = 1m \cdot 2m \cdot 1,2m$

$\underline{\underline{V = 2,4m^3}}$

(2) $V = a \cdot b \cdot c$

$V = 20cm \cdot 12cm \cdot 32cm$

$\underline{\underline{V = 7680cm^3}}$

(3) $V = A \cdot h$

$V = (6cm \cdot 4,5cm - 4cm \cdot 2,5cm - 2cm \cdot 1cm) \cdot 12cm$

$\underline{\underline{V = 180cm^3}}$

(4) $V = \frac{a \cdot b}{2} \cdot h$

$V = \frac{20cm \cdot 5cm}{2} \cdot 30cm$

$\underline{\underline{V = 1500cm^3}}$

(5) $V = \frac{d^2 \cdot \pi}{4} \cdot h$

$V = \frac{1^2m^2 \cdot 3,14}{4} \cdot 1,5m$

$\underline{\underline{V = 1,18m^3}}$

(6) $V = \frac{d^2 \cdot \pi}{4} \cdot h$

$V = \frac{20^2cm^2 \cdot 3,14}{4} \cdot 24cm$

$\underline{\underline{V = 7536cm^3}}$

(7) $V = A \cdot h$

$V = 12dm \cdot 24dm \cdot 0,04dm$

$\underline{\underline{V = 11,52dm^3}}$

(8) $V = A \cdot h$

$V = \frac{6dm + 4dm}{2} \cdot 2dm \cdot 0,05dm$

$\underline{\underline{V = 0,5dm^3}}$

21.3

21.3

(1) $V = \frac{A \cdot h}{3}$

$V = \frac{4m \cdot 4m}{3} \cdot 6m$

$\underline{\underline{V = 32m^3}}$

(2) $V = \frac{A \cdot h}{3}$

$V = \frac{4^2m^2 \cdot 3,14 \cdot 6m}{4 \cdot 3}$

$\underline{\underline{V = 25,12m^3}}$

(3) $V_1 = V_2$

$300mm \cdot 300mm \cdot h = \frac{400mm \cdot \overset{1}{\cancel{300}}mm \cdot 200mm}{\cancel{3}}$

$h = \frac{400\cancel{mm} \cdot 100\cancel{mm} \cdot 200mm}{300\cancel{mm} \cdot 300\cancel{mm}}$

$\underline{\underline{h = 88,89mm}}$

(4) $V = \frac{A \cdot h}{3}$

$V = \frac{1,2^2dm^2 \cdot 3,14 \cdot 1,5dm}{4 \cdot 3}$

$\underline{\underline{V = 0,565dm^3}}$

(5) $V = \frac{A \cdot l}{3}$

$l = \frac{3V}{A}$

$l = \frac{3 \cdot 100cm^{\cancel{3}}}{5\cancel{cm} \cdot 5\cancel{cm}}$

$\underline{\underline{l = 12cm = 120mm}}$

(6) $V = \frac{A \cdot h}{3}$

$V = \frac{0,4^2dm^2 \cdot 3,14 \cdot 1,2dm}{4 \cdot 3}$

$\underline{\underline{V = 0,05dm^3}}$

$\boxed{21.3}$

(7) $V = \frac{A \cdot h}{3}$

$V = \frac{2m \cdot 2m \cdot 3m}{3}$

$\underline{\underline{V = 4m^3}}$

(8) $h \cdot 3m \cdot 3m = \frac{4^2 m^2 \cdot \pi \cdot \cancel{3m}}{4 \cdot \cancel{3}}$

$h = \frac{4^2 m^{\cancel{2}} \cdot 3{,}14 \cancel{m}}{4 \cdot 3m \cdot \cancel{3m}}$

$\underline{\underline{h = 1{,}396m}}$

$\boxed{21.4}$ $\boxed{21.4}$

(9) $V \approx A_m \cdot h$

$A_m = \frac{A_1 + A_2}{2}$

$A_m = \frac{4m \cdot 4m + 2m \cdot 2m}{2}$

$A_m = 10m^2$

$V \approx 10\ m^2 \cdot 1m$

$\underline{\underline{V \approx 10\ m^3}}$

(10) $V \approx A_m \cdot h$

$A_m = \frac{A_1 + A_2}{2}$

$A_m = \frac{\frac{3^2 dm^2 \cdot 3{,}14}{4} + \frac{1{,}8^2 dm^2 \cdot 3{,}14}{4}}{2}$

$A_m = 4{,}804dm^2$

$V \approx 4{,}804dm^2 \cdot 2dm$

$\underline{\underline{V \approx 9{,}61dm^3}}$

(11) $V \approx A_m \cdot h$

$A_m = \frac{A_1 + A_2}{2}$

$A_m = \frac{10cm \cdot 10cm + 5cm \cdot 5cm}{2}$

$A_m = 62{,}5cm^2$

$V \approx 62{,}5cm^2 \cdot 12cm$

$\underline{\underline{V \approx 750cm^3}}$

(12) $V \approx A_m \cdot h$

$A_m = \frac{A_1 + A_2}{2}$

$A_m = \frac{4dm \cdot 8dm + 6dm \cdot 3dm}{2}$

$A_m = 25dm^2$

$V \approx 25dm^2 \cdot 0{,}5dm$

$\underline{\underline{V \approx 12{,}5dm^3}}$

(13) $V \approx A_m \cdot h$

$A_m = \frac{A_1 + A_2}{2}$

$A_m = \frac{\frac{2^2 dm^2 \cdot 3{,}14}{4} + \frac{1^2 dm^2 \cdot 3{,}14}{4}}{2}$

$A_m = 1{,}96dm^2$

$V \approx 1{,}96dm^2 \cdot 1{,}5dm$

$\underline{\underline{V \approx 2{,}94dm^3}}$

(14) $V \approx A_m \cdot h$

$A_m = \frac{A_1 + A_2}{2}$

$A_m = \frac{1{,}6^2 dm^2 + 1^2 dm^2}{2}$

$A_m = 1{,}78dm^2$

$V \approx 1{,}78dm^2 \cdot 1{,}2dm$

$\underline{\underline{V \approx 2{,}136dm^3}}$

(15) $V \approx A_m \cdot h$

$A_m = \frac{\frac{1{,}6^2 dm^2 \cdot 3{,}14}{4} + \frac{1^2 dm^2 \cdot 3{,}14}{4}}{2}$

$A_m = 1{,}4dm^2$

$V \approx 1{,}4dm^2 \cdot 1{,}2dm$

$\underline{\underline{V \approx 1{,}68dm^3}}$

(16) $V \approx A_m \cdot h$

$A_m = \frac{A_1 + A_2}{2}$

$A_m = \frac{\frac{1{,}8^2 dm^2 \cdot 3{,}14}{4} + \frac{1^2 dm^2 \cdot 3{,}14}{4}}{2}$

$A_m = 1{,}66dm^2$

$V \approx 1{,}66dm^2 \cdot 2dm$

$\underline{\underline{V \approx 3{,}32dm^3}}$

$\boxed{22.2}$ $\boxed{22.2}$

(1) $V = V_1 + V_2$

$V_1 = a \cdot b \cdot c$

$V_1 = 3cm \cdot 8cm \cdot 8cm$

$V_1 = 192cm^3$

$V_2 = \frac{d^2 \cdot \pi}{4} \cdot h$

$V_2 = \frac{5^2 cm^2 \cdot \pi}{4} \cdot 7cm$

$V_2 = 137cm^3$

$V = 192cm^3 + 137cm^3$

$\underline{\underline{V = 329cm^3}}$

(2) $V = V_1 - V_2$

$V_1 = \frac{D^2 \cdot \pi}{4} \cdot h$

$V_1 = \frac{15^2 cm^2 \cdot 3{,}14}{4} \cdot 20cm$

$V_1 = 3533cm^3$

$V_2 = \frac{d^2 \cdot \pi}{4} \cdot h$

$V_2 = \frac{10^2 cm^2 \cdot 3{,}14}{4} \cdot 20cm$

$V_2 = 1570cm^3$

$V = 3533cm^3 - 1570cm^3$

$\underline{\underline{V = 1963cm^3}}$

(3) $V = V_1 + V_2$

$V_1 = a \cdot b \cdot c$

$V_1 = 12cm \cdot 20cm \cdot 3cm$

$V_1 = 720cm^3$

$V_2 = \frac{a + b}{2} \cdot h \cdot c$

$V_2 = \frac{10cm + 6cm}{2} \cdot 3cm \cdot 6cm$

$V_2 = 144cm^2$

$V = 720cm^3 + 144cm^3$

$\underline{\underline{V = 864cm^3}}$

(4) $V = V_1 + V_2 - V_3$

$V_1 = a \cdot b \cdot c$

$V_1 = 8cm \cdot 5cm \cdot 2cm$

$V_1 = 80cm^3$

$V_2 = \frac{4cm + 3cm}{2} \cdot 4cm \cdot 3cm$

$V_2 = 42cm^3$

$V_3 = \frac{2^2 cm^2 \cdot 3{,}14}{4} \cdot 3cm$

$V_3 = 9{,}42cm^3$

$V = 80cm^3 + 42cm^3 - 9{,}42cm^3$

$\underline{\underline{V = 112{,}58cm^3}}$

(5) $V = V_1 + V_2 - V_3$

$V_1 = 12cm \cdot 8cm \cdot 3cm$

$V_1 = 288cm^3$

$V_2 = 8cm \cdot 4cm \cdot 2cm$

$V_2 = 64cm^3$

$V_3 = 4cm \cdot 2cm \cdot 2cm$

$V_3 = 16cm^3$

$V = 288cm^3 + 64cm^3 - 16cm^3$

$\underline{\underline{V = 336cm^3}}$

(6) $V = V_1 + V_2$

$V_1 = 5dm \cdot 5dm \cdot 5dm$

$V_1 = 125dm^3$

$V_2 = \frac{5dm \cdot 5dm}{3} \cdot 3dm$

$V_2 = 25dm^3$

$V = 125dm^3 + 25dm^3$

$\underline{\underline{V = 150dm^3}}$

(7) $V = V_1 - V_2 - V_3$

$V_1 = \frac{16^2 cm^2 \cdot 3{,}14}{4} \cdot 6cm$

$V_1 = 1206cm^3$

$V_2 = \frac{10^2 cm^2 \cdot 3{,}14}{4} \cdot 3cm$

$V_2 = 236cm^3$

$V_3 = \frac{5^2 cm^2 \cdot 3{,}14}{4} \cdot 3cm$

$V_3 = 59cm^3$

$V = 1206cm^3 - 236cm^3 - 59cm^3$

$\underline{\underline{V = 911cm^3 = 0{,}911dm^3}}$

(8) $V = V_1 + V_2 - V_3$

$V_1 = 10cm \cdot 20cm \cdot 3cm$

$V_1 = 600cm^3$

$V_2 = 20cm \cdot 12cm \cdot 4cm$

$V_2 = 960cm^3$

$V_3 = 10^2 cm^2 \cdot 0{,}215 \cdot \frac{1}{2} \cdot 4cm$

$V_3 = 43cm^3$

$V = 600cm^3 + 960cm^3 - 43cm^3$

$\underline{\underline{V = 1517cm^3}}$

(9)

$V = a^2 \cdot x$

$x = \frac{V}{a^2}$

$x = \frac{3{,}2m^3}{2m \cdot 2m}$

$\underline{\underline{x = 0{,}8m}}$

(10) $V = V_1 - V_2$

$V_1 = \left(\frac{12^2cm^2 \cdot 3{,}14}{4} + \frac{18^2cm^2 \cdot 3{,}14}{4}\right) \cdot \frac{1}{2} \cdot 10cm$

$V_1 = 1837cm^3$

$V_2 = \frac{8^2 \cdot cm^2 \cdot 3{,}14}{4} \cdot 10cm$

$V_2 = 502cm^3$

$V = 1837cm^3 - 502cm^3$

$\underline{\underline{V = 1335cm^3 = 1{,}335dm^3}}$

(11) $V = A \cdot h$

$A = \frac{R^2 \cdot \pi}{6}$

$\sin 60^\circ = \frac{10mm}{R}$

$R = \frac{10mm}{\sin 60^\circ}$

$R = 11{,}5mm$

$A = \frac{1{,}15^2cm^2 \cdot 3{,}14}{6}$

$A = 0{,}692cm^2$

$V = 0{,}692cm^2 \cdot 8cm$

$\underline{\underline{V = 5{,}5cm^3}}$

(12) $V = V_1 + V_2 + V_3$

$V_1 = 12cm \cdot 10cm \cdot 4cm$

$V_1 = 480cm^3$

$V_2 = 2 \cdot 10cm \cdot 3cm \cdot 5cm$

$V_2 = 300cm^3$

$V_3 = \frac{10^2cm^2 \cdot 3{,}14}{4} \cdot 3cm$

$V_3 = 235{,}5cm^3$

$V = 480cm^3 + 300cm^3 + 235{,}5cm^3$

$\underline{\underline{V = 1016cm^3 = 1{,}016dm^3}}$

(13) $V = V_1 + V_2 - V_3$

$V_1 = \frac{8^2cm^2 \cdot 3{,}14}{4} \cdot 8cm$

$V_1 = 402cm^3$

$V_2 = \frac{10^2cm^2 \cdot 3{,}14}{\cancel{4}} \cdot \cancel{4}cm$

$V_2 = 314cm^3$

$V_3 = \frac{6^2cm^2 \cdot 3{,}14}{4} \cdot 12cm$

$V_3 = 339cm^3$

$V = 402cm^3 + 314cm^3 - 339cm^3$

$\underline{\underline{V = 377cm^3}}$

(14)

$V = V_1 - V_2$

$V_1 = 12cm \cdot 8cm \cdot 12cm$

$V_1 = 1152cm^3$

$V_2 = \frac{4cm \cdot 8cm}{2} \cdot 6cm$

$V_2 = 96cm^3$

$V = 1152cm^3 - 96cm^3$

$\underline{\underline{V = 1056cm^3}}$

(15) $V = V_1 - V_2 - V_3$

$V_1 = 10cm \cdot 10cm \cdot 2cm$

$V_1 = 200cm^3$

$V_2 = 6cm \cdot 10cm \cdot 1cm$

$V_2 = 60cm^3$

$V_3 = \frac{5^2cm^2 \cdot 3{,}14}{4} \cdot 1cm$

$V_3 = 19{,}63cm^3$

$V = 200cm^3 - 60cm^3 - 19{,}63cm^3$

$\underline{\underline{V = 120cm^3}}$

(16) $V = V_1 + V_2$

$V_1 = \frac{10cm \cdot 10cm}{2} \cdot 10cm$

$V_1 = 500cm^3$

$V_2 = \frac{10^2cm^2 \cdot 3{,}14}{4} \cdot 10cm$

$V_2 = 785cm^3$

$V = 500cm^3 + 785cm^3$

$\underline{\underline{V = 1285cm^3}}$

(1)

$$V_1 = V_2$$
$$l_1 \cdot 60mm \cdot 120\cancel{mm} = 200mm \cdot 40mm \cdot 120\cancel{mm}$$
$$l_1 = \frac{200mm \cdot 40\cancel{mm}}{60\cancel{mm}}$$
$$\underline{\underline{l_1 = 133,3mm}}$$

(2)

$$V_1 = V_2$$
$$l_1 \cdot 40\cancel{mm} \cdot 10mm = 50mm \cdot 5mm \cdot 40\cancel{mm}$$
$$l_1 = \frac{50mm \cdot 5\cancel{mm}}{10\cancel{mm}}$$
$$\underline{\underline{l_1 = 25mm}}$$

(3)

$$V_1 = V_2$$
$$l_1 \cdot 40mm \cdot 40mm = 50mm \cdot \frac{25^2 mm^2 \cdot 3,14}{4}$$
$$l_1 = \frac{50\cancel{mm} \cdot 25^2 \cancel{mm^2} \cdot 3,14}{40\cancel{mm} \cdot 40\cancel{mm} \cdot 4}$$
$$\underline{\underline{l_1 = 15,3mm}}$$

(4)

$$V_1 = V_2$$
$$80mm \cdot 800\cancel{mm} \cdot 600mm = l_2 \cdot 4mm \cdot 800\cancel{mm}$$
$$l_2 = \frac{80mm \cdot 600\cancel{mm}}{4\cancel{mm}}$$
$$\underline{\underline{l_2 = 12000mm = 12m}}$$

(5)

$$V_1 = V_2$$
$$l_1 \cdot 50\cancel{mm} \cdot 50\cancel{mm} = 50\cancel{mm} \cdot 50\cancel{mm} \cdot 300mm \cdot \frac{1}{3}$$
$$\underline{\underline{l_1 = 100mm}}$$

(6)

$$V_1 = V_2$$
$$40\cancel{mm} \cdot 40\cancel{mm} \cdot 100mm = 40\cancel{mm} \cdot 40\cancel{mm} \cdot l_2 \cdot \frac{1}{3}$$
$$l_2 = 100mm \cdot 3$$
$$\underline{\underline{l_2 = 300mm}}$$

(7)

$$V_1 = V_2$$
$$l_1 \cdot 40\cancel{mm} \cdot 100\cancel{mm} = 40\cancel{mm} \cdot 100\cancel{mm} \cdot 120mm \cdot \frac{1}{2}$$
$$\underline{\underline{l_1 = 60mm}}$$

(8)

$$V_1 = V_2$$
$$60mm \cdot 60mm \cdot 80mm = 100mm \cdot 100mm \cdot l_2$$
$$l_2 = \frac{60mm \cdot 60mm \cdot 80\cancel{mm}}{100\cancel{mm} \cdot 100mm}$$
$$l_2 = 28,8mm$$
$$x = 120mm + l_2$$
$$x = 120mm + 28,8mm$$
$$\underline{\underline{x = 148,8mm}}$$

24.2

24.2

(1)

$$m = V \cdot \rho$$
$$m = 1,2m \cdot 1m \cdot 0,8m \cdot 2,2\,\frac{t}{m^3}$$
$$\underline{\underline{m = 2,112t = 2112kg}}$$

(2)

$$m = V \cdot \rho$$
$$m = \frac{8^2 dm^2 \cdot 3,14}{4} \cdot 8dm \cdot 0,95\frac{kg}{dm^3}$$
$$\underline{\underline{m = 382kg = 0,382t}}$$

(3)

$$m = V \cdot \rho$$
$$V = A \cdot l$$
$$V = (2dm \cdot 1dm - 1,5dm \cdot 0,75dm) \cdot 8dm$$
$$V = 7dm^3$$
$$m = 7\cancel{dm^3} \cdot 7,85\frac{kg}{\cancel{dm^3}}$$
$$\underline{\underline{m = 54,95kg}}$$

(4.)

$$2,5t = 1,2m \cdot 1,2m \cdot x \cdot \rho$$
$$x = \frac{2,5t}{1,2m \cdot 1,2m \cdot \rho}$$
$$x = \frac{2,5\cancel{t} \cdot m^3}{1,2\cancel{m} \cdot 1,2\cancel{m} \cdot 2,5\cancel{t}}$$
$$\underline{\underline{x = 0,69m}}$$

(5)

$$m = V \cdot \rho$$
$$m = 20\cancel{dm} \cdot 10\cancel{dm} \cdot 0,008\cancel{dm} \cdot 8,96\frac{kg}{\cancel{dm^3}}$$
$$\underline{\underline{m = 14,336kg}}$$

(6) $m = V \cdot \rho$

$V = \frac{3^2dm^2 \cdot 3,14}{4} + \frac{4^2dm^2 \cdot 3,14}{2} \cdot 2dm$

$V = 19,6dm^3$

$m = 19,6\cancel{dm^3} \cdot 1\frac{kg}{\cancel{dm^3}}$

$\underline{\underline{m = 19,6kg}}$

(7) $m = V \cdot \rho$

$V = \frac{0,02^2dm^2 \cdot 3,14}{4} \cdot 200dm$

$\underline{\underline{V = 0,0628dm^3}}$

$m = 0,0628\cancel{dm^3} \cdot 7,8\frac{kg}{\cancel{dm^3}}$

$\underline{\underline{m = 0,490kg}}$

(8) $m = V \cdot \rho$

$V = (8dm \cdot 7dm - 5dm \cdot 1dm - 3dm \cdot 3dm) \cdot 0,05dm$

$V = 2,1dm^3$

$m = 2,1dm^3 \cdot 7,8\frac{kg}{\cancel{dm^3}}$

$\underline{\underline{m = 16,38kg}}$

25.3

(1)

	N	daN	kN
a)	2000	200	2
b)	8400	840	8,4
c)	5200	520	5,2
d)	2250	225	2,25
e)	4500	450	4,5

25.3

(2) $1kg \mathrel{\hat{=}} 10N$

$\underline{\underline{G = 800N}}$

$\underline{\underline{F = 800N}}$

(3) $m = m_1 + m_2 + m_3$

$m = 1000kg + 2000kg + 800kg$

$m = 3800kg$

$\underline{\underline{F = 38000N}}$

(4) $\underline{\underline{F_1 = 70N}}$

$\underline{\underline{F_2 = 100N}}$

(5) $\underline{\underline{F_1 = 100N}}$

$\underline{\underline{F_2 = 37,5N}}$

$\underline{\underline{F_3 = 62,5N}}$

(6) $m = m_1 + m_2$

$m = 100kg + 250kg$

$m = 350kg \mathrel{\hat{=}} 3500N$

$F = 3500N - 3350N$

$\underline{\underline{F = 150N}}$

(7) $F = F_1 + F_2$

$F = 250N + 400N$

$\underline{\underline{F = 650N}}$

(8) $m = m_1 + m_2 + m_3 + m_4$

$m = 80kg + 60kg + 120kg + 250kg$

$\underline{\underline{m = 510kg}}$

$\underline{\underline{F = 5100N = 5,1kN}}$

25.4

(1) $G^2 = 2F_1{}^2$

$F_1{}^2 = \frac{G^2}{2}$

$F_1 = \sqrt{\frac{G^2}{2}}$

$F_1 = \sqrt{\frac{700^2}{2}}$

$\underline{\underline{F_1 = 495\ N = F_2}}$

25.4

(2) $F_1 = F_2$

$F_1 = \sqrt{\frac{G}{2}}$

$F_1 = \sqrt{\frac{10^2}{2}}$

$F_1 = 7,1kN = F_2$

$\underline{\underline{F_1 = 7100N = F_2}}$

③ $F^2 = F_1^2 + F_2^2$

$F_1 = F_2$

$F^2 = 2 \cdot F_1^2$

$F = \sqrt{2 \cdot F_1^2}$

$F = \sqrt{2 \cdot 500^2}$

$\underline{\underline{F = 707N}}$

④ a) $F_1 = \frac{G}{2}$

$F_1 = \frac{10kN}{2}$

$\underline{\underline{F_1 = 5kN}}$

b) $F_1^2 + F_1^2 = 10^2$

$2F_1^2 = 10^2$

$\underline{\underline{F_1 = 7,1kN}}$

c)

$F_1 = G$

$\underline{\underline{F_1 = 10kN}}$

⑤ $F_1^2 + F_2^2 = 1,5^2$

$F_1 = F_2$

$2F_1^2 = 1,5^2$

$F_1^2 = \frac{1,5^2}{2}$

$F_1 = \sqrt{\frac{1,5^2}{2}}$

$F_1 = 1,06kN$

$\underline{\underline{F_2 = 1,06kN}}$

⑥ $F^2 = 600^2 + 400^2$

$F = \sqrt{600^2 + 400^2}$

$\underline{\underline{F = 721N}}$

⑦

$\sin 17^\circ = \frac{F}{2 \cdot F_1}$

$F_1 = \frac{F}{2 \cdot \sin 17^\circ}$

$F_1 = \frac{120N}{2 \cdot \sin 17^\circ}$

$\underline{\underline{F_1 = 205N = F_2}}$

⑧ a) $F = 2 \cdot 10kN$

$\underline{\underline{F = 20kN}}$

b) $\cos 30^\circ = \frac{F}{2 \cdot 10kN}$

$F = 20kN \cdot \cos 30^\circ$

$\underline{\underline{F = 17,3kN}}$

c) $F^2 = 10^2 + 10^2$

$F = \sqrt{10^2 + 10^2}$

$\underline{\underline{F = 14,14kN}}$

26.3

① $M = F \cdot r$

$M = 300N \cdot 240mm$

$M = 72000Nmm$

$\underline{\underline{M = 72Nm}}$

② $M = F_1 \cdot r + F_2 \cdot r$

$M = 50N \cdot 0,21m + 50N \cdot 0,21m$

$\underline{\underline{M = 21Nm}}$

③ $M = F \cdot r$

$M = 200N \cdot 0,2m$

$\underline{\underline{M = 40Nm}}$

④ $M = F \cdot r$

$F = \frac{M}{r}$

$F = \frac{80N\cancel{m}}{0,22\cancel{m}}$

$\underline{\underline{F = 364N}}$

⑤ $M = F \cdot r$

$F = \frac{M}{r}$

$F = \frac{8N\cancel{m}}{0,2\cancel{m}}$

$\underline{\underline{F = 40N}}$

⑥ $M = F \cdot r$

$M = 8000N \cdot 0,12m$

$\underline{\underline{M = 960Nm}}$

⑦ $M = F \cdot r$

$F = \frac{M}{r}$

$F = \frac{40N\cancel{m}}{0,34\cancel{m}}$

$\underline{\underline{F = 118N}}$

⑧ $M = F \cdot r$

$M = 50N \cdot 0,24m$

$\underline{\underline{M\ 12Nm}}$

$\boxed{26.4}$

(1)
$$F_1 \cdot l_1 = F_2 \cdot l_2$$
$$F_2 = \frac{F_1 \cdot l_1}{l_2}$$
$$F_2 = \frac{12\,daN \cdot 120\cancel{mm}}{450\cancel{mm}}$$
$$\underline{\underline{F_2 = 3{,}2\,daN}}$$

(2)
$$F_2 \cdot l_2 = F_1 \cdot l_1$$
$$F_2 = \frac{F_1 \cdot l_1}{l_2}$$
$$F_2 = \frac{8\,kN \cdot 280\cancel{mm}}{480\cancel{mm}}$$
$$\underline{\underline{F_2 = 4{,}7\,kN}}$$

(3)
$$1\,kg \mathrel{\hat{=}} 10\,N$$
$$G = 1500\,N$$
$$F \cdot 1300\,mm = G \cdot 400\,mm$$
$$F = \frac{G \cdot 400\cancel{mm}}{1300\cancel{mm}}$$
$$\underline{\underline{F = 462\,N}}$$

(4)
$$F_2 \cdot l_2 = F_1 \cdot l_1$$
$$F_2 = \frac{F_1 \cdot l_1}{l_2}$$
$$F_2 = \frac{12\,daN \cdot 320\cancel{mm}}{10\cancel{mm}}$$
$$\underline{\underline{F_2 = 384\,daN}}$$

(5)
$$F_1 \cdot l_1 = F_2 \cdot l_2$$
$$F_1 = \frac{F_2 \cdot l_2}{l_1}$$
$$F_1 = \frac{8\,kN \cdot 260\cancel{mm}}{124\cancel{mm}}$$
$$\underline{\underline{F_1 = 16{,}8\,kN}}$$

(6)
$$F_1 \cdot l_1 = F_2 \cdot l_2$$
$$F_1 = \frac{F_2 \cdot l_2}{l_1}$$
$$F_1 = \frac{25\,daN \cdot 30\cancel{mm}}{240\cancel{mm}}$$
$$\underline{\underline{F_1 = 3{,}125\,daN}}$$

(7)
$$F_1 \cdot l_1 = F_2 \cdot l_2$$
$$F_1 = \frac{F_2 \cdot l_2}{l_1}$$
$$F_1 = \frac{7\,kN \cdot 320\cancel{mm}}{180\cancel{mm}}$$
$$\underline{\underline{F_1 = 12{,}4\,kN}}$$

(8)
$$F_1 \cdot l_1 = F_2 \cdot l_2$$
$$F_1 = \frac{F_2 \cdot l_2}{l_1}$$
$$F_1 = \frac{2\,kN \cdot 800\cancel{mm}}{600\cancel{mm}}$$
$$\underline{\underline{F_1 = 2{,}7\,kN}}$$

$\boxed{26.5}$ $\boxed{26.5}$

(1)
$$F_1 \cdot 5{,}5\,m = G \cdot 2\,m$$
$$F_1 = \frac{G \cdot 2\cancel{m}}{5{,}5\cancel{m}}$$
$$F_1 = \frac{120\,daN \cdot 2}{5{,}5}$$
$$\underline{\underline{F_1 = 43{,}6\,daN}}$$
$$F_1 + F_2 = G$$
$$F_2 = G - F_1$$
$$F_2 = 120\,daN - 43{,}6\,daN$$
$$\underline{\underline{F_2 = 76{,}4\,daN}}$$

(2)
$$F_1 \cdot 70\,m = G \cdot 40\,m$$
$$F_1 = \frac{G \cdot 40\cancel{m}}{70\cancel{m}}$$
$$F_1 = \frac{200\,kN \cdot 40}{70}$$
$$\underline{\underline{F_1 = 114\,kN}}$$
$$F_1 + F_2 = G$$
$$F_2 = G - F_1$$
$$F_2 = 200\,kN - 114\,kN$$
$$\underline{\underline{F_2 = 86\,kN}}$$

(3)
$$F_1 \cdot 850\,mm = F \cdot 250\,mm$$
$$F_1 = \frac{F \cdot 250\cancel{mm}}{850\cancel{mm}}$$
$$F_1 = \frac{5000\,N \cdot 25}{85}$$
$$\underline{\underline{F_1 = 1471\,N}}$$
$$F_1 + F_2 = F$$
$$F_2 = F - F_1$$
$$F_2 = 5000\,N - 1471\,N$$
$$\underline{\underline{F_2 = 3529\,N}}$$

(4)
$$F_2 \cdot 380\,mm = F \cdot 300\,mm$$
$$F_2 = \frac{F \cdot 300\cancel{mm}}{380\cancel{mm}}$$
$$F_2 = \frac{8000\,N \cdot 300}{380}$$
$$\underline{\underline{F_2 = 6316\,N}}$$

(5)
$$F_1 \cdot 3600\,mm = F \cdot 2100\,mm$$
$$F_1 = \frac{F \cdot 2100\cancel{mm}}{3600\cancel{mm}}$$
$$F_1 = \frac{12000\,N \cdot 2100}{360}$$
$$\underline{\underline{F_1 = 7000\,N}}$$
$$F_1 + F_2 = F$$
$$F_2 = F - F_1$$
$$F_2 = 12000\,N - 7000\,N$$
$$\underline{\underline{F_2 = 5000\,N}}$$

(6) $F_1 \cdot 3m = G \cdot 1m$

$F_1 = \frac{G \cdot 1\cancel{m}}{3\cancel{m}}$

$F_1 = \frac{12000N}{3}$

$F_1 = 4000N$

$F_1 + F_2 = G$

$F_2 = G - F_1$

$F_2 = 12000N - 4000N$

$F_2 = 8000N$

(7) $F_1 \cdot 480mm = F \cdot 250mm$

$F_1 = \frac{F \cdot 250\cancel{mm}}{480\cancel{mm}}$

$F_1 = \frac{14000N \cdot 250}{480}$

$F_1 = 7292N$

$F_1 + F_2 = F$

$F_2 = F - F_1$

$F_2 = 14000N - 7292N$

$F_2 = 6708N$

(8) $F_1 \cdot 12500mm = G_1 \cdot 8000mm + G_2 \cdot 12500mm \cdot 0{,}5$

$F_1 = \frac{G_1 \cdot 8000\cancel{mm} + G_2 \cdot 12500\cancel{mm} \cdot 0{,}5}{12500\cancel{mm}}$

$F_1 = \frac{40kN \cdot 8000 + 12kN \cdot 12500 \cdot 0{,}5}{12500}$

$F_1 = 31{,}6kN$

$F_1 + F_2 = G_1 + G_2$

$F_2 = 40kN + 12kN - 31{,}6kN$

$F_2 = 20{,}4kN$

27.2

27.2

(1) $F_1 \cdot l_1 = F_2 \cdot l_2$

$F_1 = \frac{F_2 \cdot l_2}{l_1}$

$F_1 = \frac{400N \cdot 50\cancel{mm}}{220\cancel{mm}}$

$F_1 = 91N$

(2) $F_1 \cdot l_1 = G \cdot l_2$

$F_1 = \frac{G \cdot l_2}{l_1}$

$F_1 = \frac{750N \cdot 420\cancel{mm}}{1200\cancel{mm}}$

$F_1 = 263N$

(3) $F_2 \cdot l_2 = F_1 \cdot l_1$

$F_2 = \frac{F_1 \cdot l_1}{l_2}$

$F_2 = \frac{5kN \cdot 500\cancel{mm}}{400\cancel{mm}}$

$F_2 = 6{,}25kN$

(4) $1kg \mathrel{\hat{=}} 10N$

$G = 4000N$

$F_1 \cdot 300mm = G \cdot 80mm$

$F_1 = \frac{G \cdot 80\cancel{mm}}{300\cancel{mm}}$

$F_1 = \frac{4000N \cdot 80}{300}$

$F_1 = 1067N$

(5) $F_1 \cdot l_1 = F_2 \cdot l_2$

$F_1 = \frac{F_2 \cdot l_2}{l_1}$

$F_1 = \frac{8kN \cdot 300\cancel{mm}}{200\cancel{mm}}$

$F_1 = 12kN$

(6) $F_1 \cdot l_1 = F_2 \cdot l_2$

$F_1 = \frac{F_2 \cdot l_2}{l_1}$

$F_1 = \frac{12kN \cdot 180\cancel{mm}}{240\cancel{mm}}$

$F_1 = 9kN$

(7) $F_2 \cdot l_2 = F_1 \cdot l_1$

$F_2 = \frac{F_1 \cdot l_1}{l_2}$

$F_2 = \frac{25daN \cdot 400\cancel{mm}}{120\cancel{mm}}$

$F_2 = 83daN$

(8) $F_2 \cdot l_2 = F_1 \cdot l_1$

$F_2 = \frac{F_1 \cdot l_1}{l_2}$

$F_2 = \frac{2kN \cdot 300\cancel{mm}}{198\cancel{mm}}$

$F_2 = 3kN$

$\cos 45^\circ = \frac{l_2}{280mm}$

$l_2 = 280mm \cdot \cos 45^\circ$

$l_2 = 198mm$

28.2

(1) $F = \mu \cdot G$

$F = 0{,}3 \cdot 2000N$

$\underline{\underline{F = 600N}}$

(2) $m = m_1 + m_2$

$m = 200kg + 200kg$

$m = 400kg$

$\underline{\underline{G = 4000N}}$

$F = \mu \cdot G$

$F = 0{,}08 \cdot 4000N$

$\underline{\underline{F = 320N}}$

(3) $m = m_1 + m_2 + m_3$

$m = 50kg + 100kg + 70kg$

$m = 220kg$

$\underline{\underline{G = 2200N}}$

$F = \mu \cdot G$

$\mu = \frac{F}{G}$

$\mu = \frac{100\cancel{N}}{2200\cancel{N}}$

$\underline{\underline{\mu = 0{,}045}}$

(4) $F = \mu \cdot G$

$F = 0{,}08 \cdot 1{,}8kN$

$\underline{\underline{F = 0{,}144kN}}$

(5) $G = \mu \cdot 2F_n$

$F_n = \frac{G}{2 \cdot \mu}$

$F_n = \frac{200N}{2 \cdot 0{,}4}$

$\underline{\underline{F_n = 250N}}$

(6) $F = \mu \cdot F_n$

$F = 0{,}25 \cdot 15kN$

$\underline{\underline{F = 3{,}75kN}}$

(7) a) $F_n \cdot 800mm = F_1 \cdot 1600mm$

$F_n = \frac{F_1 \cdot 1600\cancel{mm}}{800\cancel{mm}}$

$F_n = \frac{80N \cdot 1600}{800}$

$\underline{\underline{F_n = 160N}}$

b) $F = \mu \cdot F_n$

$F = 0{,}25 \cdot 160N$

$\underline{\underline{F = 40N}}$

c) $M = F \cdot r$

$M = 40N \cdot 0{,}075m$

$\underline{\underline{M = 3Nm}}$

(8) $F = \mu \cdot F_n$

$F = 0{,}04 \cdot 5kN$

$\underline{\underline{F = 0{,}2kN}}$

$M = F \cdot r$

$M = 200N \cdot 0{,}03m$

$\underline{\underline{M = 6Nm}}$

29.2

29.2

(1) $W = G \cdot s$

$W = 9000N \cdot 2m$

$\underline{\underline{W = 18000Nm = 18000J}}$

(2) $W = G \cdot s$

$W = 45N \cdot 3m$

$\underline{\underline{W = 135Nm = 135J}}$

(3) $W = G \cdot s$

$W = 30000N \cdot 3m$

$\underline{\underline{W = 90000Nm = 90000J = 90\ kJ}}$

(4) $W = G \cdot s$

$W = 2000N \cdot 2m$

$\underline{\underline{W = 4000Nm = 4000J}}$

(5) $W = G \cdot s$

$G = \frac{W}{s}$

$G = \frac{200000N\cancel{m}}{8\cancel{m}}$

$G = 25000N$

$10N \mathrel{\hat{=}} 1kg$

$\underline{\underline{m = 2500kg = 2{,}5t}}$

(6) $m = m_1 + m_2$

$m = 25kg + 70kg$

$m = 95kg$

$W = G \cdot s$

$W = 950N \cdot 2000m$

$\underline{\underline{W = 1900000Nm = 1900000J = 1900}}$

⑦ a) $m = V \cdot \rho$

$V = 2dm \cdot 4dm \cdot 10dm$

$V = 80dm^3$

$m = 80\cancel{dm^3} \cdot 7{,}8\frac{kg}{\cancel{dm^3}}$

$\underline{\underline{m = 624kg}}$

b) $W = G \cdot s$

$W = 6240N \cdot 6m$

$W = 37440Nm$

$\underline{\underline{W = 37440J = 37{,}44kJ}}$

⑧ a) $m = V \cdot \rho$

$V = \frac{1^2dm^2 \cdot 3{,}14}{4} \cdot 40dm$

$V = 31{,}4dm^3$

$m = 31{,}4dm^3 \cdot 7{,}8\frac{kg}{dm^3}$

$\underline{\underline{m = 245kg = 0{,}245t}}$

b) $W = G \cdot s$

$s = \frac{W}{G}$

$s = \frac{4900\cancel{N}m}{2450\cancel{N}}$

$\underline{\underline{s = 2m}}$

$\boxed{29.2}$

$\boxed{29.3}$

$\boxed{29.3}$

⑨ $W = G \cdot s$

$s = \frac{W}{G}$

$s = \frac{5000000\cancel{N}m}{500000\cancel{N}}$

$\underline{\underline{s = 10m}}$

⑩ $W = G \cdot s$

$W = 1000000kN \cdot 20m$

$\underline{\underline{W = 20 Mio kJ}}$

⑪ $W = F \cdot s$

$W = 2kN \cdot 1{,}2m$

$\underline{\underline{W = 2{,}4kJ}}$

⑫ $F \cdot 400mm = G \cdot r$

$F = \frac{G \cdot r}{400mm}$

$F = \frac{120N \cdot 200\cancel{mm}}{400\cancel{mm}}$

$\underline{\underline{F = 60N}}$

$W = G \cdot s$

$W = 120N \cdot 6m$

$\underline{\underline{W = 720Nm = 720J}}$

⑬ $W = G \cdot s$

$W = 80N \cdot 12m$

$\underline{\underline{W = 960Nm = 960J}}$

⑭ $W = F \cdot s$

$F = \mu \cdot G$

$F = 0{,}3 \cdot 1000N$

$F = 300N$

$W = 300N \cdot 8m$

$\underline{\underline{W = 2400Nm = 2400J = 2{,}4kJ}}$

⑮ $W = G \cdot s$

$W = 1000N \cdot 18m$

$\underline{\underline{W = 18000Nm = 18000J = 18kJ}}$

⑯ $W = F \cdot s$

$W = 1500N \cdot 10000m$

$\underline{\underline{W = 15000000Nm = 15000kJ}}$

$\boxed{30.2}$

$\boxed{30.2}$

① $F_{ax} \cdot P = F \cdot 2\pi r$

$F_{ax} = \frac{F \cdot 2\pi \cdot r}{P}$

$F_{ax} = \frac{160N \cdot 2\pi \cdot 200\cancel{mm}}{5\cancel{mm}}$

$\underline{\underline{F_{ax} = 40192N}}$

② $F \cdot 2\pi r = F_{ax} \cdot P$

$F = \frac{F_{ax} \cdot P}{2 \cdot \pi r}$

$F = \frac{4000N \cdot 1{,}5\cancel{mm}}{2 \cdot 3{,}14 \cdot 240\cancel{mm}}$

$\underline{\underline{F = 4N}}$

③ $F_{ax} \cdot P = F \cdot 2\pi r$

$P = \frac{F \cdot 2\pi r}{F_{ax}}$

$P = \frac{100\cancel{N} \cdot 2\pi \cdot 300mm}{37680\cancel{N}}$

$\underline{\underline{P = 5mm}}$

④ $F \cdot 2\pi r = F_{ax} \cdot P$

$F = \frac{F_{ax} \cdot P}{2 \cdot \pi r}$

$F = \frac{5000N \cdot 3\cancel{mm}}{2 \cdot 3{,}14 \cdot 320\cancel{mm}}$

$\underline{\underline{F = 7{,}46N}}$

⑤ a) $F_{ax} \cdot 240mm = 9000N \cdot 360mm$

$F_{ax} = \frac{9000N \cdot 360\cancel{mm}}{240\cancel{mm}}$

$\underline{\underline{F_{ax} = 13500N}}$

b) $F \cdot 2\pi r = F_{ax} \cdot P$

$F = \frac{F_{ax} \cdot P}{2 \cdot \pi r}$

$F = \frac{13500N \cdot 6\cancel{mm}}{2 \cdot 3{,}14 \cdot 230\cancel{mm}}$

$\underline{\underline{F = 56N}}$

(6)
$F_{ax} \cdot P = F \cdot 2\pi r$

$F_{ax} = \frac{F \cdot 2\pi r}{P}$

$F_{ax} = \frac{80N \cdot 2\pi \cdot 140\cancel{mm}}{1{,}25\cancel{mm}}$

$F_{ax} = 56269N$

(7)
$F_{ax} \cdot P = F \cdot 2\pi r$

$F_{ax} = \frac{F \cdot 2\pi r}{P}$

$F_{ax} = \frac{120N \cdot 2 \cdot 3{,}14 \cdot 270\cancel{mm}}{5\cancel{mm}}$

$F_{ax} = 40694N$

(8)
$2\, F_{ax} \cdot P = F \cdot 2\pi r$

$F_{ax} = \frac{F \cdot 2\pi r}{2 \cdot P}$

$F_{ax} = \frac{80N \cdot 2 \cdot \pi \cdot 400\cancel{mm}}{2 \cdot 2\cancel{mm}}$

$F_{ax} = 50240N$

31.4

(1)
$v = \frac{s}{t}$

$s = v \cdot t$

$s = 120\frac{km}{\cancel{h}} \cdot \frac{1}{4}\cancel{h}$

$s = 30km$

(2)
$v = \frac{s}{t}$

$v = \frac{12km \cdot 4}{3 \cdot h}$

$v = 16\frac{km}{h} = \frac{16000m}{3600s} = 4{,}4\frac{m}{s}$

(3)
$v_m = \frac{s}{t}$

$v_m = \frac{200mm}{0{,}8 \cdot 60min}$

$v_m = 4{,}17\frac{mm}{min} = 0{,}25\frac{m}{s}$

$v_m = 15\frac{m}{min}$

(4)
$v = \frac{s}{t}$

$t = \frac{s}{v}$

$t = \frac{800\cancel{mm} \cdot min}{60\cancel{mm}}$

$t = 13{,}3min$

(5)
$v = \frac{s}{t}$

$t = \frac{s}{v}$

$t = \frac{20\cancel{m} \cdot s}{0{,}15\cancel{m}}$

$t = 133s$

(6)
$v = \frac{s}{t}$

$t = \frac{s}{v}$

$t = \frac{0{,}160\cancel{m} \cdot min}{8\cancel{m}}$

$t = 0{,}02min = 1{,}2s$

(7)
$v = \frac{s}{t}$

$s = v \cdot t$

$s = 16\frac{m}{\cancel{min}} \cdot \frac{16}{60}\cancel{min}$

$s = 4{,}267m$

(8)
$v = \frac{s}{t}$

$t = \frac{s}{v}$

$t = \frac{20\cancel{m} \cdot s}{4\cancel{m}}$

$t = 5s$

31.5

(1)
$v = d \cdot \pi \cdot n$

$v = \frac{0{,}6m \cdot 3{,}14 \cdot 1061}{60 \cdot s}$

$v = 33{,}3\frac{m}{s} = \frac{33{,}3km \cdot 3600}{1000\ h}$

$v = 120\frac{km}{h}$

(2)
$v = d \cdot \pi \cdot n$

$v = \frac{0{,}12m \cdot 3{,}14 \cdot 160}{min}$

$v = 60{,}3\frac{m}{min} = \frac{60{,}3m}{60\ s}$

$v = 1\frac{m}{s}$

(3)
$v = D \cdot \pi \cdot n$

$D = \frac{v}{\pi \cdot n}$

$D = \frac{25m \cdot 60 \cdot \cancel{s}}{\cancel{s} \cdot 3{,}14 \cdot 2000}$

$D = 0{,}239m = 239mm$

(4)
$v = d \cdot \pi \cdot n$

$n = \frac{v}{d \cdot \pi}$

$n = \frac{25\cancel{m}}{min \cdot 0{,}016\cancel{m} \cdot 3{,}14}$

$n = 498\frac{1}{min} \Rightarrow 438\frac{1}{min}$

(5)
$v = d \cdot \pi \cdot n$

$n = \frac{v}{d \cdot \pi}$

$n = \frac{40\cancel{m}}{min \cdot 0{,}012\cancel{m} \cdot 3{,}14}$

$n = 1062\frac{1}{min}$

(6)
$v = d \cdot \pi \cdot n$

$v = 0{,}08m \cdot 3{,}14 \cdot 90\frac{1}{min}$

$v = 22{,}6\frac{m}{min}$

(7)
$v = d \cdot \pi \cdot n$

$n = \frac{v}{d \cdot \pi}$

$n = \frac{40\cancel{m}}{min \cdot 0{,}4\cancel{m} \cdot 3{,}14}$

$n = 31{,}8\frac{1}{min}$

(8)
$v = d \cdot \pi \cdot n$

$v = 0{,}15m \cdot 3{,}14 \cdot 2400\frac{1}{min}$

$v = 1130\frac{m}{min} = \frac{1130m}{60s}$

$v = 18{,}8\frac{m}{s}$

32.3

32.3

(1) $1kg \mathrel{\hat{=}} 10N$

$G = 600N + 400N$

$\underline{\underline{G = 1000N}}$

$P = \frac{F \cdot s}{t}$

$P = \frac{1000N \cdot 5m}{15s}$

$P = 333\frac{Nm}{s} \quad (1\frac{Nm}{s} = 1W)$

$\underline{\underline{P = 333W}}$

(2) $P = F \cdot v$

$v = 20\frac{m}{min} = 0{,}33\frac{m}{s}$

$P = 28000N \cdot 0{,}333\frac{m}{s}$

$P = 9324\frac{Nm}{s}$

$\underline{\underline{P = 9{,}324kW}}$

(3) $m = 1t = 1000kg$

$\underline{\underline{G = 10000N}}$

$P = \frac{F \cdot s}{t}$

$P = \frac{10000N \cdot 4m}{5s}$

$P = 8000\frac{Nm}{s} = 8000W$

$\underline{\underline{P = 8kW}}$

(4) $v = d \cdot \pi \cdot n$

$v = 0{,}1m \cdot 3{,}14 \cdot 420 \cdot \frac{1}{60s}$

$\underline{\underline{v = 2{,}2\frac{m}{s}}}$

$P = F \cdot v$

$P = 1455N \cdot 2{,}2\frac{m}{s}$

$\underline{\underline{P = 3201W = 3{,}201kW}}$

(5) $P = \frac{F \cdot s}{t}$

$P = \frac{200N \cdot 6m}{12s}$

$P = 100\frac{Nm}{s}$

$\underline{\underline{P = 100W}}$

(6) $P = \frac{F \cdot s}{t}$

$P = \frac{20000N \cdot 20m}{40s}$

$P = 10000\frac{Nm}{s} = 10000W$

$\underline{\underline{P = 10kW}}$

(7) $v = 24\frac{m}{min} = 0{,}4\frac{m}{s}$

$P = F \cdot v$

$F = \frac{P}{v}$

$F = \frac{3000W \cdot s}{0{,}4m} (1W = 1\frac{Nm}{s})$

$F = \frac{3000Nm \cdot s}{0{,}4m \cdot s}$

$\underline{\underline{F = 7500N}}$

(8) $700\frac{m^3}{h} = 700\,000\frac{dm^3}{h} \Rightarrow \begin{matrix} F = 7000\,000N \\ t = 3600s \end{matrix}$

$P = \frac{F \cdot s}{t}$

$P = \frac{7000\,000N \cdot 200m}{3600s}$

$P = 388888\frac{Nm}{s} = 388888W$

$\underline{\underline{P = 389kW}}$

32.4

32.4

(1) $\eta = \frac{P_2}{P_1}$

$\eta = \frac{5{,}1kW}{6kW}$

$\underline{\underline{\eta = 0{,}85 \,;\, \eta_{\%} = 85\%}}$

(2) $\eta = \frac{P_2}{P_1}$

$P_2 = \eta \cdot P_1$

$P_2 = 0{,}88 \cdot 5kW$

$\underline{\underline{P_2 = 4{,}4kW}}$

(3) $\eta = \frac{P_2}{P_1}$

$P_2 = \eta \cdot P_1$

$P_2 = 0{,}7 \cdot 4kW$

$\underline{\underline{P_2 = 2{,}8kW}}$

(4) $P_2 = F \cdot v$

$P_2 = 120N \cdot 0{,}2\frac{m}{s}$

$P_2 = 24\frac{Nm}{s} \quad (1\frac{Nm}{s} = 1W)$

$\underline{\underline{P_2 = 24W}}$

$\underline{\underline{P_1 = 30W}}$

(5) $P_2 = \frac{G \cdot h}{t}$

$P_2 = \frac{4000N \cdot 4m}{15s}$

$P_2 = 1067W = \underline{\underline{1{,}067kW}}$

$\eta = \frac{P_2}{P_1}$

$P_1 = \frac{P_2}{\eta}$

$P_1 = \frac{1{,}067kW}{0{,}75}$

$\underline{\underline{P_1 = 1{,}422kW}}$

(6) $P_2 = G \cdot v$

$P_2 = \frac{15000N \cdot 2m}{s}$

$P_2 = 30000\frac{Nm}{s} = 30000W$

$\underline{\underline{P_2 = 30kW}}$

$\eta = \frac{P_2}{P_1}$

$P_1 = \frac{P_2}{\eta}$

$P_1 = \frac{30kW}{0{,}8}$

$\underline{\underline{P_1 = 37{,}5kW}}$

(7) $\eta = \frac{P_2}{P_1}$

$\eta = \frac{8000N \cdot 4m}{s \cdot 42700W}$ $\quad (1\,W = 1\frac{Nm}{s})$

$\underline{\underline{\eta = 0{,}75\ ;\ \eta_{\%} = 75\%}}$

(8) $P_2 = \frac{G \cdot h}{t}$

$P_2 = \frac{200N \cdot 4m}{10s}$

$\underline{\underline{P_2 = 80\frac{Nm}{s} = 80W}}$

$P_1 = \frac{F \cdot s_1}{t}$

$F = \frac{P_1 \cdot t}{s_1}$

$F = \frac{100N\cancel{m} \cdot 10\cancel{s}}{\cancel{s}\ 8\cancel{m}}$

$\underline{\underline{F = 125N}}$

$\eta = \frac{P_2}{P_1}$

$P_1 = \frac{P_2}{\eta}$

$P_1 = \frac{80W}{0{,}8}$

$\underline{\underline{P_1 = 100W}}$

33.4

33.4

(1) $F \cdot 3{,}2m = G \cdot 1{,}3m$

$F = \frac{G \cdot 1{,}3\cancel{m}}{3{,}2\cancel{m}}$

$F = \frac{450N \cdot 1{,}3}{3{,}2}$

$\underline{\underline{F = 183N}}$

(2) $F \cdot 4{,}8\cancel{m} = G \cdot 3{,}2\cancel{m}$

$F = \frac{G \cdot 3{,}2}{4{,}8}$

$F = \frac{450N \cdot 3{,}2}{4{,}8}$

$\underline{\underline{F = 300N}}$

(3) $F \cdot 120\cancel{m} = G \cdot 72\cancel{m}$

$F = \frac{G \cdot 72}{120}$

$850kg \mathrel{\hat{=}} 8500N$

$F = \frac{8500N \cdot 72}{120}$

$\underline{\underline{F = 5100N}}$

$\underline{\underline{G = 800N}}$

(4) $F \cdot 12\cancel{m} = G \cdot 4\cancel{m}$

$F = \frac{G \cdot 4}{12}$

$F = \frac{800N}{3}$

$\underline{\underline{F = 267N}}$

(5) $F = G \cdot \sin\alpha$

$F = 80kN \cdot \sin 30^0$

$\underline{\underline{F = 40kN}}$

(6) $F = G \cdot \sin\alpha$

$\underline{\underline{G = 9500N}}$

$F = 9500N \cdot \sin 19^0$

$\underline{\underline{F = 3093N}}$

(7) $F = G \cdot \sin\alpha$

$F = 50kN \cdot \sin 58^0$

$\underline{\underline{F = 42{,}4kN}}$

(8) $F = G \cdot \sin\alpha$

$F = 5kN \cdot \sin 32^0$

$\underline{\underline{F = 2{,}65kN}}$

33.5

33.5

(1) $F_2 \cdot 5\cancel{mm} = F_1 \cdot 25\cancel{mm}$

$F_2 = \frac{F_1 \cdot 25}{5}$

$F_2 = 50N \cdot 5$

$\underline{\underline{F_2 = 250N}}$

(2) $F_2 \cdot 5\cancel{mm} = F_1 \cdot 100\cancel{mm}$

$F_2 = \frac{F_1 \cdot 100}{5}$

$F_2 = 160N \cdot 20$

$\underline{\underline{F_2 = 3200N}}$

(3) $\frac{F_1}{F_2} = \frac{1}{100}$

$100F_1 = F_2$

$F_2 = 100F_1$

$F_2 = 100 \cdot 120N$

$\underline{\underline{F_2 = 12000N}}$

33.5

(4) $\frac{F_1}{F_2} = \frac{1}{100}$

$F_1 = \frac{F_2}{100}$

$F_1 = \frac{5000N}{100}$

$\underline{\underline{F_1 = 50N}}$

(5) $\frac{F_1}{G} = \frac{1}{100}$

$F_1 = \frac{G}{100}$

$F_1 \cdot 100 = G$

$G = F_1 \cdot 100$

$G = 20N \cdot 100$

$\underline{\underline{G = 2000N}}$

(6) $\underline{\underline{G = 8000N}}$

$\frac{F_1}{G} = \tan 10^\circ$

$F_1 = G \cdot \tan 10^\circ$

$F_1 = 8000N \cdot \tan 10^\circ$

$\underline{\underline{F_1 = 1411N}}$

(7) $F_1 \cdot 200\cancel{mm} = F_2 \cdot 4\cancel{mm}$

$F_1 = \frac{F_2 \cdot 4}{200}$

$F_1 = \frac{70kN}{50}$

$\underline{\underline{F_1 = 1{,}4kN}} \; \underline{\underline{= 1400N}}$

(8) $\frac{F_1}{F_2} = \frac{1}{50}$

$F_1 \cdot 50 = F_2$

$F_2 = 50 \cdot 150N$

$\underline{\underline{F_2 = 7500N}}$

34.2

(1) $F = \frac{G}{n}$

$F = \frac{800N}{2}$

$\underline{\underline{F = 400N}}$

(2) $F = \frac{G}{n}$

$F = \frac{450N}{1}$

$\underline{\underline{F = 450N}}$

$s_1 = s_2$

$\underline{\underline{s_1 = 2m}}$

34.2

(3) $F = \frac{G}{n}$

$F = \frac{1200N}{2}$

$\underline{\underline{F = 600N}}$

(4) $s_1 = s_2$

$\underline{\underline{s_1 = 3m}}$

$F = \frac{G}{n}$

$G = F \cdot n$

$G = 400N \cdot 1$

$G = 400N$

$10N \mathrel{\hat{=}} 1kg$

$\underline{\underline{m = 40kg}}$

$W = G \cdot s_2$

$W = 400N \cdot 3m$

$\underline{\underline{W = 1200Nm = 1200J}}$

(5) $s_1 = 2 \cdot s_2$

$s_2 = \frac{s_1}{2}$

$s_2 = \frac{4{,}8m}{2}$

$\underline{\underline{s_2 = 2{,}4m}}$

$F = \frac{G}{n}$

$G = F \cdot n$

$G = 84N \cdot 2$

$G = 168N \qquad 10N \mathrel{\hat{=}} 1kg$

$\underline{\underline{m = 16{,}8kg}}$

$W = G \cdot s_2$

$W = 168N \cdot 2{,}4m$

$\underline{\underline{W = 403{,}2Nm = 403J}}$

(6) $F = \frac{G}{n}$

$F = \frac{8000N}{4}$

$\underline{\underline{F = 2000N}}$

(7) $F_1 \cdot 320mm = G \cdot 400mm$

$F_1 = \frac{G \cdot 400\cancel{mm}}{320\cancel{mm}}$

$F_1 = \frac{400N \cdot 400}{320}$

$\underline{\underline{F_1 = 500N}}$

$F_2 = \frac{F_1}{2}$

$F_2 = \frac{500N}{2}$

$\underline{\underline{F_2 = 250N}}$

(8) $F = \frac{G}{n}$

$G = F \cdot n$

$G = 120N \cdot 6$

$G = 720N$

$\underline{\underline{m = 72kg}}$

$10N \mathrel{\hat{=}} 1kg$

$m = 72kg$

$s_1 = 6s_2$

$s_1 = 6 \cdot 4m$

$\underline{\underline{s_1 = 24m}}$

$W = G \cdot s_2$

$W = 720N \cdot 4m$

$\underline{\underline{W = 2880Nm = 2880J}}$

35.4

35.4

(1) $d = m \cdot z$

$d = 4mm \cdot 28$

$\underline{\underline{d = 112mm}}$

$h = \frac{13}{6} m$

$h = \frac{13 \cdot 4mm}{6}$

$\underline{\underline{h = 8,67mm}}$

$h_a = m$

$\underline{\underline{h_a = 4mm}}$

(2) $\underline{\underline{z = 24}}$

$d = m \cdot z$

$d = 5mm \cdot 24$

$\underline{\underline{d = 120mm}}$

$d_a = d + 2m$

$d_a = 120mm + 2 \cdot 5mm$

$\underline{\underline{d_a = 130mm}}$

$d_f = 120mm - \frac{14}{6} \cdot 5mm$

$\underline{\underline{d_f = 108,33mm}}$

(3) $\underline{\underline{z = 16}}$

$h_a = m$

$\underline{\underline{h_a = 1,75mm}}$

$h_f = \frac{7}{6} m$

$h_f = \frac{7 \cdot 1,75mm}{6}$

$\underline{\underline{h_f = 2,04mm}}$

(4) $d_a = d + 2m$

$d_a = z \cdot m + 2m$

$d_a = m(z + 2)$

$m = \frac{d_a}{z + 2}$

$m = \frac{85mm}{32 + 2}$

$\underline{\underline{m = 2,5mm}}$

$d = m \cdot z$

$d = 2,5mm\ 32$

$\underline{\underline{d = 80mm}}$

$d_f = d - \frac{14}{6} \cdot m$

$d_f = 80mm - \frac{14}{6} \cdot 2,5mm$

$\underline{\underline{d_f = 74,17mm}}$

(5) $d_1 = m \cdot z_1$

$z_1 = \frac{d_1}{m}$

$z_1 = \frac{75\cancel{mm}}{3\cancel{mm}}$

$\underline{\underline{z_1 = 25}}$

$d_2 = m \cdot z_2$

$z_2 = \frac{d_2}{m}$

$z_2 = \frac{159\cancel{mm}}{3\cancel{mm}}$

$\underline{\underline{z_2 = 53}}$

$a = \frac{d_1}{2} + \frac{d_2}{2}$

$a = \frac{75mm}{2} + \frac{159mm}{2}$

$\underline{\underline{a = 117mm}}$

(6) $d_1 = m \cdot z_1$

$d_1 = 2,5mm \cdot 31$

$\underline{\underline{d_1 = 77,5mm}}$

$d_2 = m \cdot z_2$

$d_2 = 2,5mm \cdot 59$

$\underline{\underline{d_2 = 147,5mm}}$

$a = \frac{d_1}{2} + \frac{d_2}{2}$

$a = \frac{77,5mm}{2} + \frac{147,5mm}{2}$

$\underline{\underline{a = 112,5mm}}$

(7)

$d_1 = m \cdot z_1$

$d_1 = 4mm \cdot 31$

$\underline{\underline{d_1 = 124mm}}$

$a = \frac{d_1}{2} + \frac{d_2}{2}$

$2a = d_1 + d_2$

$d_2 = 2a - d_1$

$d_2 = 2 \cdot 158mm - 124mm$

$\underline{\underline{d_2 = 192mm}}$

$d_2 = m \cdot z_2$

$z_2 = \frac{d_2}{m}$

$z_2 = \frac{192mm}{4mm}$

$\underline{\underline{z_2 = 48}}$

(8)

$d_1 = m \cdot z_1$

$d_1 = 2{,}5mm \cdot 31$

$\underline{\underline{d_1 = 77{,}5mm}}$

$d_2 = m \cdot z_2$

$d_2 = 2{,}5mm \cdot 92$

$\underline{\underline{d_2 = 230mm}}$

$a = \frac{d_2}{2} - \frac{d_1}{2}$

$a = \frac{230mm}{2} - \frac{77{,}5mm}{2}$

$\underline{\underline{a = 76{,}25mm}}$

35.5

35.5

(1)

$a = \frac{m \cdot z_1}{2} + \frac{m \cdot z_2}{2}$

$a = \frac{5mm \cdot 5}{2} + \frac{5mm \cdot 15}{2}$

$\underline{\underline{a = 50mm}}$

(2)

$a = \frac{m \cdot z_1}{2} + \frac{m \cdot z_2}{2}$

$a = \frac{8mm \cdot 16}{2} + \frac{8mm \cdot 12}{2}$

$\underline{\underline{a = 112mm}}$

$\frac{n_1}{n_2} = \frac{z_2}{z_1}$

$n_2 = \frac{n_1 \cdot z_1}{z_2}$

$n_2 = \frac{700 \cdot 16}{min \cdot 12}$

$\underline{\underline{n_2 = 933\frac{1}{min}}}$

(3)

$i = \frac{M_2}{M_1}$

$M_2 = i \cdot M_1$

$M_2 = 2 \cdot 10Nm$

$\underline{\underline{M_2 = 20Nm}}$

(4)

$a = \frac{d_1}{2} + \frac{d_2}{2}$

$a = \frac{m \cdot z_1}{2} + \frac{m \cdot z_2}{2}$

$a = \frac{4mm \cdot 17}{2} + \frac{4mm \cdot 49}{2}$

$\underline{\underline{a = 132mm}}$

$i = \frac{z_2}{z_1}$

$i = \frac{49}{17}$

$\underline{\underline{i = 2{,}88}}$

(5)

$i = \frac{n_1}{n_2} = \frac{z_2}{z_1} = \frac{z_2 \cdot m}{z_1 \cdot m} = \frac{d_2}{d_1}$

$\frac{n_1}{n_2} = \frac{d_2}{d_1}$

$n_2 = \frac{n_1 \cdot d_1}{d_2}$

$n_2 = \frac{240 \cdot 108\cancel{mm}}{min\ 200\cancel{mm}}$

$\underline{\underline{n_2 = 129{,}6\ \frac{1}{min}}}$

$v = d \cdot \pi \cdot n$

$v = 0{,}2m \cdot 3{,}14 \cdot \frac{129{,}6}{60s}$

$\underline{\underline{v = 1{,}36\frac{m}{s}}}$

(6)

$i = \frac{z_2}{z_1}$

$i = \frac{108}{54}$

$\underline{\underline{i = 2}}$

$i = \frac{n_1}{n_2}$

$n_2 = \frac{n_1}{i}$

$n_2 = \frac{1400}{min \cdot 2}$

$\underline{\underline{n_2 = 700\frac{1}{min}}}$

(7) $a = \frac{d_2}{2} - \frac{d_1}{2}$

$2a = d_2 - d_1$

$d_1 = d_2 - 2a$

$d_1 = m \cdot z_3 - 2a$

$d_1 = 3mm \cdot 64 - 2 \cdot 58{,}5mm$

$d_1 = 75mm$

$d_1 = m \cdot z_1$

$z_1 = \frac{d_1}{m}$

$z_1 = \frac{75\cancel{mm}}{3\cancel{mm}}$

$\underline{\underline{z_1 = 25}}$

$i = \frac{z_2}{z_1}$

$i = \frac{64}{25}$

$\underline{\underline{i = 2{,}56}}$

(8) $i = \frac{z_2}{z_1}$

$i = \frac{56}{14}$

$\underline{\underline{i = 4}}$

$i = \frac{M_2}{M_1}$

$M_1 = \frac{M_2}{i}$

$M_1 = \frac{500N \cdot 0{,}2m}{4}$

$M_1 = 25Nm$

$M_1 = F \cdot r$

$F = \frac{M_1}{r}$

$F = \frac{25N\cancel{m}}{0{,}3\cancel{m}}$

$\underline{\underline{F = 83{,}3N}}$

36.2

36.2

(1) $i_1 = \frac{z_2}{z_1}$

$i_1 = \frac{24}{16}$

$\underline{\underline{i_1 = 1{,}5}}$

$i_2 = \frac{z_4}{z_3}$

$i_2 = \frac{24}{12}$

$\underline{\underline{i_2 = 2}}$

$i = i_1 \cdot i_2$

$i = 1{,}5 \cdot 2$

$\underline{\underline{i = 3}}$

(2) $\frac{n_1}{n_4} = \frac{z_2 \cdot z_4}{z_1 \cdot z_3}$

$n_4 = \frac{n_1 \cdot z_1 \cdot z_3}{z_2 \cdot z_4}$

$n_4 = \frac{1400 \cdot 51 \cdot 41}{min \cdot 17 \cdot 25}$

$\underline{\underline{n_4 = 6888\frac{1}{min}}}$

$i = \frac{n_1}{n_4}$

$i = \frac{1400 \cdot \cancel{min}}{6888 \cdot \cancel{min}}$

$\underline{\underline{i = 0{,}2}}$

(3) $i = \frac{z_2 \cdot z_4}{z_1 \cdot z_3}$

$i = \frac{40 \cdot 45}{25 \cdot 21}$

$\underline{\underline{i = 3{,}43}}$

$i = \frac{n_1}{n_4}$

$n_4 = \frac{n_1}{i}$

$n_4 = \frac{1400}{min \cdot 3{,}43}$

$\underline{\underline{n_4 = 408\frac{1}{min}}}$

(4) $i = \frac{z_2 \cdot z_4}{z_1 \cdot z_3}$

$i = \frac{45 \cdot 50}{15 \cdot 25}$

$\underline{\underline{i = 6}}$

$i = \frac{n_1}{n_4}$

$n_1 = n_4 \cdot i$

$n_1 = n_4 \cdot i$

$n_1 = 124\frac{1}{min} \cdot 6$

$\underline{\underline{n_1 = 744\frac{1}{min}}}$

(5) $i = \frac{d_2 \cdot z_3}{d_1 \cdot z_1}$

$i = \frac{240\cancel{mm} \cdot 42}{120\cancel{mm} \cdot 17}$

$\underline{\underline{i = 4{,}94}}$

$i = \frac{n_1}{n}$

$n = \frac{n_1}{i}$

$n = \frac{1400}{min \cdot 4{,}94}$

$\underline{\underline{n = 283\frac{1}{min}}}$

(6) $i = \frac{z_2}{z_1}$

$i = \frac{34}{17}$

$\underline{\underline{i = 2}}$

$i = \frac{n_1}{n}$

$n = \frac{n_1}{i}$

$n = \frac{900}{min \cdot 2}$

$\underline{\underline{n = 450\frac{1}{min}}}$

(7) $i = \frac{z_2 \cdot z_4}{z_1 \cdot z_3}$

$i = \frac{35 \cdot 41}{17 \cdot 19}$

$\underline{\underline{i = 4{,}44}}$

$i = \frac{n_1}{n}$

$n = \frac{n_1}{i}$

$n = \frac{1400}{min \cdot 4{,}44}$

$\underline{\underline{n = 315\frac{1}{min}}}$

(8) $i = \frac{1400 \cdot \cancel{min}}{8400 \cdot \cancel{min}}$

$\underline{\underline{i = 1 : 6}}$

$i = \frac{z_2 \cdot z_4 \cdot z_6}{z_1 \cdot z_3 \cdot z_5}$

$z_2 = \frac{z_1 \cdot z_3 \cdot z_5 \cdot i}{z_4 \cdot z_6}$

$z_2 = \frac{48 \cdot 30 \cdot 50}{20 \cdot 25 \cdot 6}$

$\underline{\underline{z_2 = 24}}$

(9) $\frac{n}{n_{min}} = \frac{21\cdot 28}{7\cdot 7}$ $\qquad$ $\frac{n}{n_{max}} = \frac{21\cdot 15}{7\cdot 15}$

$n_{min} = \frac{n}{12}$ $\qquad$ $n_{max} = \frac{n}{3}$

$n_{min} = \frac{3000}{min\cdot 12}$ $\qquad$ $n_{max} = \frac{3000}{min\cdot 3}$

$\underline{\underline{n_{min} = 250\frac{1}{min}}}$ $\qquad$ $\underline{\underline{n_{max} = 1000\frac{1}{min}}}$

(10) $\frac{1400}{n\cdot min} = \frac{120\cancel{mm}}{80\cancel{mm}} \cdot \frac{25}{15}$

$n = \frac{1400\cdot 80\cdot 15}{min\cdot 120\cdot 25}$

$\underline{\underline{n = 560\frac{1}{min}}}$

(11) $\frac{1000}{min\cdot n_{min}} = \frac{35\cdot 15}{15\cdot 15}$ $\qquad$ $\frac{1000}{min\cdot n_{max}} = \frac{35\cdot 30}{15\cdot 30}$

$n_{min} = \frac{1000\cdot 15}{min\cdot 35}$ $\qquad$ $n_{max} = \frac{1000\cdot 30}{min\cdot 35}$

$\underline{\underline{n_{min} = 429\frac{1}{min}}}$ $\qquad$ $\underline{\underline{n_{max} = 857\frac{1}{min}}}$

(12) $\frac{700}{min\cdot n} = \frac{34\cdot 39}{17\cdot 13}$ $\qquad$ $i = \frac{700\cdot \cancel{min}}{\cancel{min}\cdot 117}$

$n = \frac{700}{min\cdot 6}$ $\qquad$ $\underline{\underline{i = 6}}$

$\underline{\underline{n = 117\frac{1}{min}}}$

(13) $\frac{1400}{min\cdot n_{min}} = \frac{31\cdot 50}{19\cdot 13}$ $\qquad$ $\rightarrow 1400\frac{1}{min} \rightarrow n_{max}$

$n_{min} = \frac{1400\cdot 19\cdot 13}{min\cdot 31\cdot 50}$ $\qquad$ $n_{max} = 1400\frac{1}{min}$

$\underline{\underline{n_{min} = 223\frac{1}{min}}}$

(14) $n = \frac{1400\cdot 60\cdot \cancel{mm}\cdot 15}{180\cancel{mm}\cdot min\cdot 30}$

$\underline{\underline{n = 233\frac{1}{min}}}$

(15) $\frac{n\cdot min}{350} = \frac{34\cdot 30}{17\cdot 15}$

$n = \frac{350\cdot 34\cdot 30}{min\cdot 17\cdot 15}$

$\underline{\underline{n = 1400\frac{1}{min}}}$

(16) $\frac{1400}{min\cdot n_{min}} = \frac{120\cancel{mm}\cdot 31}{80\cancel{mm}\cdot 15}$ $\qquad$ $\frac{1400}{min\cdot n_{max}} = \frac{80\cancel{mm}\cdot 31}{120\cancel{mm}\cdot 15}$

$n_{min} = \frac{1400\cdot 80\cdot 15}{min\cdot 120\cdot 31}$ $\qquad$ $n_{max} = \frac{1400\cdot 120\cdot 1}{80\cdot 31}$

$\underline{\underline{n_{min} = 452\frac{1}{min}}}$ $\qquad$ $\underline{\underline{n_{max} = 1016\frac{1}{min}}}$

37.3

37.3

(1) $s = m\cdot z\cdot \pi\cdot \frac{108^0}{360^0}$

$s = 3mm\cdot 10\cdot 3,14\cdot \frac{108}{360}$

$\underline{\underline{s = 28,26mm}}$

(2) $s = m\cdot z\cdot \pi$ $\qquad$ $d = m\cdot z$

$z = \frac{s}{m\cdot \pi}$ $\qquad$ $d = 3mm\cdot 15$

$z = \frac{141,3\cancel{mm}}{3\cancel{mm}\cdot 3,14}$ $\qquad$ $\underline{\underline{d = 45mm}}$

$\underline{\underline{z = 15}}$

(3) $d = m\cdot z$

$d = 4mm\cdot 10$

$d = 40mm$

$v = d\cdot \pi\cdot n$

$v = 0,04m\cdot 3,14\cdot 90\frac{1}{min}$

$\underline{\underline{v = 11,3\frac{m}{min}}}$

(4) $d = m\cdot z$

$d = 4mm\cdot 30$

$d = 120mm$

$v = d\cdot \pi\cdot n$

$n = \frac{v}{d\cdot \pi}$

$n = \frac{6,28\cancel{m}}{min\cdot 0,12\cancel{m}\cdot 3,14}$

$\underline{\underline{n = 16,7\frac{1}{min}}}$

(5) $i = \frac{1200\ \cancel{min}}{40\ \cancel{min}}$

$\underline{\underline{i = 30}}$

$i = \frac{z_2}{z_1}$

$z_2 = i\cdot z_1$

$z_2 = 30\cdot 1$

$\underline{\underline{z_2 = 30}}$

(6) $i = \frac{z_2}{z_1}$ $\qquad$ $i = \frac{n_1}{n_2}$

$i = \frac{50}{2}$ $\qquad$ $n_2 = \frac{n_1}{i}$

$\underline{\underline{i = 25}}$ $\qquad$ $n_2 = \frac{1400}{min\cdot 25}$

$\underline{\underline{n_2 = 56\frac{1}{min}}}$

(7) $i = \frac{n_1}{n_2}$

$i = \frac{1400\cancel{min}}{70\cancel{min}}$

$\underline{\underline{i = 20}}$

(8) $\frac{n_1}{n_2} = \frac{z_2}{z_1}$

$n_2 = \frac{n_1 \cdot z_1}{z_2}$

$n_2 = \frac{1500 \cdot 3}{min \cdot 30}$

$\underline{\underline{n_2 = 150\frac{1}{min}}}$

37.4

(9) $d = m \cdot z$

$d = 5mm \cdot 40$

$d = 200mm$

$\alpha = 360^\circ \cdot \frac{10}{40}$

$\underline{\underline{\alpha = 90^\circ}}$

$\sin 45^\circ = \frac{l}{2 \cdot 120mm}$

$l = 2 \cdot 120mm \cdot \sin 45^\circ$

$\underline{\underline{l = 169{,}7mm}}$

(10) $\frac{n_1}{n_4} = \frac{z_2 \cdot z_4}{z_1 \cdot z_2}$

$n_4 = \frac{n_1 \cdot z_1 \cdot z_3}{z_2 \cdot z_4}$

$n_4 = \frac{1400 \cdot 1 \cdot 20}{min \cdot 40 \cdot 60}$

$\underline{\underline{n_4 = 11{,}7\frac{1}{min}}}$

(11) $s = m \cdot z \cdot \pi$

$s = 4mm \cdot 6 \cdot 3{,}14$

$s = 75{,}36mm$

$\bigcirc = \frac{1000\cancel{mm}}{75{,}36\cancel{mm}}$

$\underline{\underline{\bigcirc \approx 14}}$

(12) $s = m \cdot z \cdot \pi \cdot \frac{90^\circ}{360^\circ}$

$s = 4mm \cdot 24 \cdot 3{,}14 \cdot \frac{1}{4}$

$\underline{\underline{s = 75{,}36mm}}$

(13) $\frac{n_1}{n_2} = \frac{z_2}{z_1}$

$n_2 = \frac{n_1 \cdot z_1}{z_2}$

$n_2 = \frac{1400 \cdot 1}{min \cdot 40}$

$n_2 = 35\frac{1}{min}$

$v = d \cdot \pi \cdot n$

$v = 0{,}2m \cdot 3{,}14 \cdot 35\frac{1}{min}$

$\underline{\underline{v = 0{,}37\frac{m}{s}}}$

(14) $s = m \cdot z_3 \cdot \pi \cdot \frac{1}{1}$

$s = 5mm \cdot 12 \cdot 3{,}14 \cdot \frac{15}{45}$

$\underline{\underline{s = 62{,}8mm}}$

(15) $\frac{n_1}{n_4} = \frac{z_2 \cdot z_4}{z_1 \cdot z_3}$

$n_4 = \frac{n_1 \cdot z_1 \cdot z_3}{z_2 \cdot z_4}$

$n_4 = \frac{1400 \cdot 15 \cdot 1}{min \cdot 30 \cdot 40}$

$\underline{\underline{n_4 = 17{,}5\frac{1}{min}}}$

(16) $\frac{n_1}{n_2} = \frac{z_2}{z_1}$

$n_2 = \frac{n_1 \cdot z_1}{z_2}$

$n_2 = \frac{240 \cdot 40}{min \cdot 4}$

$\underline{\underline{n_2 = 2400\frac{1}{min}}}$

38.3

(1) $\tan\frac{\alpha}{2} = \frac{D}{2L}$ $\triangleright$ $\boxed{1 : 2}$

$\tan\frac{\alpha}{2} = \frac{40\cancel{mm}}{2 \cdot 80\cancel{mm}}$

$\underline{\underline{\frac{\alpha}{2} = 14^\circ}}$

(2) $C = \frac{D}{L}$

$L = \frac{D}{C}$

$L = \frac{36mm}{0{,}2}$

$\underline{\underline{L = 180mm}}$ $\underline{\underline{\frac{\alpha}{2} = 5{,}7^\circ}}$

(3) $C = \frac{D - d}{L}$

$D = C \cdot L + d$

$D = \frac{40mm}{50} + 4mm$

$\underline{\underline{D = 4{,}8mm}}$

$\underline{\underline{\frac{\alpha}{2} = 0{,}57^\circ}}$

(4) $\tan\frac{\alpha}{2} = \frac{C}{2}$

$\tan\frac{\alpha}{2} = \frac{1}{20\cdot 2}$

$\frac{\alpha}{2} = 1{,}432^\circ$

$C = \frac{D-d}{L}$

$L = \frac{D-d}{C}$

$L = \frac{(48mm - 40mm)\cdot 20}{1}$

$L = 160mm$

(5) $x = \frac{C}{2}\cdot L$

$x = \frac{1}{2\cdot 20}\cdot 200mm$

$x = 5mm$

$C = 1 : 20$

(6) $\tan\frac{\alpha}{2} = \frac{D-d}{2L}$

$\tan\frac{\alpha}{2} = \frac{48\cancel{mm} - 30\cancel{mm}}{2\cdot 90\cancel{mm}}$

$\frac{\alpha}{2} = 5{,}7^\circ$

$C = \frac{D-d}{L}$

$C = \frac{48\cancel{mm} - 30\cancel{mm}}{90\cancel{mm}}$

$C = 1 : 5$

(7) $C = \frac{1}{10} = \frac{2\cdot x}{4}$

$x = \frac{2}{10}$

$x = 0{,}2mm$

(8) $C = \frac{D-d}{L}$

$L = \frac{D-d}{C}$

$L = \frac{(40mm - 32mm)\cdot 20}{1}$

$L = 160mm$

$C = \frac{D-d}{x}$

$x = \frac{D-d}{C}$

$x = \frac{(32mm - 30mm)\cdot 20}{1}$

$x = 40mm$

39.3

39.3

(1) $p = \frac{F}{A}$

$F = p\cdot A$

$F = \frac{8daN\cdot 12{,}6\cancel{cm^2}}{\cancel{cm^2}}$

$F = 100{,}8daN = 1008N$

$1bar = \frac{1daN}{cm^2}$

(2) $p = \frac{F}{A}$

$p = \frac{500daN}{6{,}28cm^2}$

$p = 79{,}6\frac{daN}{cm^2} = 79{,}6bar$

(3) $p = \frac{F}{A}$

$F = p\cdot A$

$F = 12\frac{daN}{\cancel{cm^2}}\cdot 4^2\cdot 0{,}785\ \cancel{cm^2}$

$F = 150{,}7daN$

(4) $\frac{F_2}{A_2} = \frac{F_1}{A_1}$

$F_2 = \frac{F_1\cdot A_2}{A_1}$

$F_2 = \frac{120N\cdot 3{,}6^2\cdot 0{,}785\ \cancel{cm^2}}{1{,}2^2\cdot 0{,}785\ \cancel{cm^2}}$

$F_2 = 1080N$

5 $p = \frac{F}{A}$

$p = \frac{F \cdot 4}{d^2 \cdot \pi}$

$d = \sqrt{\frac{F \cdot 4}{p \cdot \pi}}$

$d = \sqrt{\frac{200 \cancel{daN} \cdot 4 \cdot cm^2}{63{,}7 \cancel{daN} \cdot \pi}}$

$\underline{\underline{d = 2cm = 20mm}}$

6 $p = \frac{F}{A}$

$\boxed{39.3}$

$F = p \cdot A$

$F = 120 \frac{daN}{\cancel{cm^2}} \cdot 28{,}26 \cancel{cm^2}$

$\underline{\underline{F = 3391daN = 33{,}91kN}}$

7 $p = \frac{F}{A}$

$p = \frac{F}{(D^2 - d^2) \cdot \frac{\pi}{4}}$

$F = p \cdot (D^2 - d^2) \cdot \frac{\pi}{4}$

$F = 25 \frac{daN}{\cancel{cm^2}} \cdot (2{,}83^2 - 2^2) \cancel{cm^2} \cdot \frac{\pi}{4}$

$\underline{\underline{F = 78{,}7daN}}$

8 a) $\frac{F_1}{A_1} = \frac{F_2}{A_2}$

$\frac{F_1}{d_1^2 \cdot \cancel{0{,}785}} = \frac{F_2}{d_2^2 \cdot \cancel{0{,}785}}$

$d_1 = \sqrt{\frac{F_1 \cdot d_2^2}{F_2}}$

$d_1 = \sqrt{\frac{80 \cancel{N} \cdot 4^2 cm^2}{320 \cancel{N}}}$

$\underline{\underline{d_1 = 2cm = 20mm}}$

b) $p = \frac{F}{A}$

$p = \frac{8daN}{2^2 \cdot 0{,}785\ cm^2}$

$p = 2{,}5 \frac{daN}{cm^2}$

$\underline{\underline{p = 2{,}5bar}}$

$\boxed{39.4}$

9 $p = \frac{F}{A}$

$F = p \cdot A$

$F = 4{,}5 \frac{daN}{cm^2} \cdot 254cm^2$

$\underline{\underline{F = 1143daN \quad ; \quad m = 1143kg}}$

$\boxed{39.4}$

10

$A = \frac{(D^2 - d^2) \cdot 3{,}14}{4}$

$A = \frac{(6^2 cm^2 - 2^2 cm^2) \cdot 3{,}14}{4}$

$\underline{\underline{A = 25{,}13cm^2}}$

$p = \frac{F}{A}$

$p = \frac{F}{(D^2 - d^2) \cdot 0{,}785}$

$F = p \cdot (D^2 - d^2) \cdot 0{,}785$

$F = 25 \frac{daN}{cm^2} (6^2 - 2^2) \cdot 0{,}785cm^2$

$F = 628daN$

39.4

(11)

$$\frac{F_2}{A_2} = \frac{F_1}{A_1}$$

$$F_2 = \frac{F_1 \cdot A_2}{A_1}$$

$$F_2 = \frac{25N \cdot 3,6^2 \cdot 0,785cm^2}{1,2^2 \cdot 0,785cm^2}$$

$$\underline{F_2 = 225N}$$

(12)

$$p = \frac{F}{A}$$

$$F = p \cdot A$$

$$F = 45\frac{daN}{cm^2} \cdot 6^2 \cdot 0,785cm^2$$

$$\underline{\underline{F = 1272daN = 12,72kN}}$$

(13)

$$p = \frac{F}{A}$$

$$p = \frac{100daN}{2^2 \cdot 0,785cm^2}$$

$$\underline{\underline{p = 31,8\frac{daN}{cm^2} = 31,8bar}}$$

(15)

$$p = \frac{F}{A}$$

$$F = p \cdot A$$

$$F = 24\frac{daN}{cm^2} \cdot (2,83^2 - 2^2)\ 0,785cm^2$$

$$\underline{\underline{F = 7,55daN = 75,5N}}$$

(14)

$$\frac{F_2}{A_2} = \frac{F_1}{A_1}$$

$$F_2 = \frac{F_1 \cdot A_2}{A_1}$$

$$F_2 = \frac{70N \cdot 12,56cm^2}{3,14cm^2}$$

$$\underline{\underline{F_2 = 280N}}$$

(16)

$$p = \frac{F}{A}$$

$$F = p \cdot A$$

$$F = 80\frac{daN}{cm^2} \cdot 10,2cm^2$$

$$\underline{\underline{F = 816daN\ ;\ m = 816kg}} \quad (g \approx 10\frac{m}{s^2})$$

40.3

(1)

$$A = \frac{12^2mm^2 \cdot 3,14}{4}$$

$$\underline{\underline{A = 113mm^2}}$$

$$\sigma = \frac{F}{A}$$

$$\sigma = \frac{5000N}{113mm^2}$$

$$\underline{\underline{\sigma = 44\ \frac{N}{mm^2}}}$$

40.3

(2)

$$\sigma = \frac{R_m}{\nu}$$

$$\sigma = \frac{500}{10}\ \frac{N}{mm^2}$$

$$\underline{\underline{\sigma = 50\frac{N}{mm^2}}}$$

$$\sigma = \frac{F}{A}$$

$$F = A \cdot \sigma$$

$$F = \frac{8^2mm^2 \cdot 3,14}{4} \cdot 50\frac{N}{mm^2}$$

$$\underline{\underline{F = 2512N}}$$

(3)

$$A = \frac{d^2 \cdot \pi}{4}$$

$$A = \frac{16^2mm^2 \cdot 3,14}{4}$$

$$\underline{\underline{A = 200,96mm^2}}$$

$$\sigma = \frac{F}{A}$$

$$F = \sigma \cdot A$$

$$F = 100\frac{N}{mm^2} \cdot 200,96mm^2$$

$$\underline{\underline{F = 20,096kN}}$$

$\boxed{40.3}$

(4)
$$A = 20\,mm \cdot 10\,mm$$
$$\underline{\underline{A = 200\,mm^2}}$$
$$\sigma = \frac{F}{A}$$
$$\sigma = \frac{8000\,N}{200\,mm^2}$$
$$\underline{\underline{\sigma = 40\frac{N}{mm^2}}}$$

(5)
$$A = \frac{1\;^2 mm^2 \cdot 3{,}14}{4}$$
$$\underline{\underline{A = 78{,}5\,mm^2}}$$
$$R_m = \frac{F_m}{A}$$
$$R_m = \frac{50000\,N}{78{,}5\,mm^2}$$
$$\underline{\underline{R_m = 637\frac{N}{mm^2}}}$$

(6)
$$A = \frac{d^2 \cdot \pi}{4} \cdot 2$$
$$A = \frac{8^2 mm^2 \cdot 3{,}14}{4} \cdot 2$$
$$\underline{\underline{A = 100{,}48\,mm^2}}$$
$$\sigma = \frac{R_m}{\nu}$$
$$\sigma = \frac{410}{8}\,\frac{N}{mm^2}$$
$$\sigma = 52{,}5\frac{N}{mm^2}$$
$$\sigma = \frac{G}{A}$$
$$G = \sigma \cdot A$$
$$G = 52{,}5\frac{N}{mm^2} \cdot 100{,}48\,mm^2$$
$$\underline{\underline{G = 5275\,N}}$$

(7)
$$A = (20 - 8)\,mm \cdot 4\,mm$$
$$\underline{\underline{A = 48\,mm^2}}$$
$$\sigma = \frac{F}{A}$$
$$F = \sigma \cdot A$$
$$F = 100\frac{N}{\cancel{mm^2}} \cdot 48\,\cancel{mm^2}$$
$$\underline{\underline{F = 4800\,N}}$$

(8)
$$A = 2 \cdot 8\,mm \cdot 1{,}5\,mm$$
$$\underline{\underline{A = 24\,mm^2}}$$
$$\sigma = \frac{F}{A}$$
$$\sigma = \frac{2400\,N}{24\,mm^2}$$
$$\underline{\underline{\sigma = 100\frac{N}{mm^2}}}$$

$\boxed{40.4}$

(9)
$$\sigma = \frac{F}{A}$$
$$\sigma = \frac{8000\,N}{(45 - 15)\,mm \cdot 15\,mm}$$
$$\underline{\underline{\sigma = 17{,}8\frac{N}{mm^2}}}$$

(10)
$$A = 10^2 mm^2 \cdot 3{,}14 \cdot \frac{1}{4}$$
$$\underline{\underline{A = 78{,}5\,mm^2}}$$
$$R_m = \frac{F_m}{A}$$
$$F_m = R_m \cdot A$$
$$F_m = 370\frac{N}{\cancel{mm^2}} \cdot 78{,}5\,\cancel{mm^2}$$
$$\underline{\underline{F_m = 29045\,N}}$$

$\boxed{40.4}$

(11)
$$\sigma = \frac{F}{A}$$
$$F = \sigma \cdot A$$
$$F = 85\frac{N}{\cancel{mm^2}} \cdot (120 - 13)\,\cancel{mm} \cdot 15\,\cancel{mm}$$
$$\underline{\underline{F = 136{,}4\,kN}}$$

(12)
$$m = 600\,kg$$
$$G = 6000\,N$$
$$\sigma_1 = \frac{G}{A}$$
$$\sigma_1 = \frac{6000\,N \cdot 4}{12^2 mm^2 \cdot 3{,}14}$$
$$\underline{\underline{\sigma_1 = 53\frac{N}{mm^2}}}$$
$$2\,F_2^{\,2} = G^2$$
$$F_2 = \sqrt{\frac{G^2}{2}}$$
$$F_2 = \frac{G}{\sqrt{2}}$$
$$F_2 = \frac{6000\,N}{\sqrt{2}}$$
$$F_2 = 4243\,N$$
$$\sigma_2 = \frac{F_2}{A}$$
$$\sigma_2 = \frac{4243\,N \cdot 4}{12^2 mm^2 \cdot 3{,}14}$$
$$\underline{\underline{\sigma_2 = 37{,}5\frac{N}{mm^2}}}$$

(13)
$$800\,kg \mathrel{\hat{=}} 8000\,N$$
$$\sigma = \frac{G}{A}$$
$$\sigma = \frac{8000\,N \cdot 4}{15^2 mm^2 \cdot 3{,}14}$$
$$\underline{\underline{\sigma = 45\frac{N}{mm^2}}}$$

(14)
$$\sigma = \frac{F}{A}$$
$$F = \sigma \cdot A$$
$$A = 5\,mm\,(40\,mm - 10\,mm)$$
$$A = 150\,mm^2$$
$$F = 100\frac{N}{\cancel{mm^2}} \cdot 150\,\cancel{mm^2}$$
$$\underline{\underline{F = 15000\,N}}$$

(15)
$$4\,t \mathrel{\hat{=}} 40000\,N$$
$$G = 40000\,N$$
$$F = \mu \cdot G$$
$$F = 0{,}3 \cdot 40000\,N$$
$$F = 12000\,N$$

$\sigma = \frac{F}{A}$

$\sigma = \frac{12000N \cdot 4}{16^2 mm^2 \cdot 3,14}$

$\sigma = 60 \frac{N}{mm^2}$

(16) $\sigma = \frac{F}{A}$ **40.4**

$\sigma = \frac{800N \cdot 4}{2 \cdot 8^2 mm^2 \cdot 3,14}$

$\sigma = 8 \frac{N}{mm^2}$

41.3 **41.3**

(1) $p = \frac{F}{A}$

$p = \frac{360N}{1,5 cm^2}$

$p = 240 \frac{N}{cm^2}$

(2) $F = 40000N$

$p = \frac{40000N}{4 \cdot 750 cm^2}$

$p = 13,3 \frac{N}{cm^2}$

(3) $p = \frac{F}{A}$

$p = \frac{2000N}{2,5cm \cdot 2,5cm}$

$p = 320 \frac{N}{cm^2}$

(4) $p = \frac{F}{A}$

$A = 200mm \cdot 75mm - 66,5mm \cdot 177mm$

$A = 3230 mm^2$

$p = \frac{20000N}{3230 mm^2}$

$p = 6,2 \frac{N}{mm^2}$

(5) $p = \frac{F}{A}$

$F = p \cdot A$

$F = 15 \frac{N}{\cancel{mm^2}} \cdot 50\cancel{mm} \cdot 50\cancel{mm}$

$F = 37500N = 3750 daN$

(6) $p = \frac{F}{A}$

$p = \frac{20000N}{12cm \cdot 24cm}$

$p = 69 \frac{N}{cm^2}$

(7) $p = \frac{F}{A}$

$A = (D^2 - d^2) \cdot \frac{\pi}{4}$

$A = (30^2 - 17^2) mm^2 \cdot \frac{3,14}{4}$

$A = 480 mm^2$

$p = \frac{2500N}{480 mm^2}$

$p = 5,2 \frac{N}{mm^2}$

(8) $p = \frac{F}{A}$

$p = \frac{200000N}{200mm \cdot 120mm}$

$p = 8,3 \frac{N}{mm^2} = 83 \frac{daN}{cm^2}$

41.4 **41.4**

(1) $A = l \cdot d$

$A = 100mm \cdot 66mm$

$A = 6000 mm^2$

$p = \frac{F}{A}$

$p = \frac{5000N}{6000 mm^2}$

$p = 0,83 \frac{N}{mm^2}$

(2)
$A = l \cdot d$
$A = 10mm \cdot 12mm$
$\underline{\underline{A = 120mm^2}}$

$p = \frac{F}{A}$
$p = \frac{6000N}{120mm^2}$
$\underline{\underline{p = 50\frac{N}{mm^2}}}$

(3)
$p = \frac{F}{A}$
$A = \frac{F}{p}$
$A = \frac{2400\cancel{N} \cdot cm^2}{50\cancel{N}}$
$A = 48cm^2$
$A = l \cdot d$
$d = \frac{A}{l}$
$d = \frac{48cm^{\cancel{2}}}{8\cancel{cm}}$
$\underline{\underline{d = 6cm = 60mm}}$

(4)
$A = l \cdot d$
$A = 16mm \cdot 10mm$
$\underline{\underline{A = 160mm^2}}$

$p = \frac{F}{A}$
$p = \frac{8000N}{160mm^2}$
$\underline{\underline{p = 50\frac{N}{mm^2}}}$

(5)
$A = l \cdot d$
$A = 8mm \cdot 12mm$
$\underline{\underline{A = 96mm^2}}$

$p = \frac{F}{A}$
$F = p \cdot A$
$F = 50\frac{N}{\cancel{mm^2}} \cdot 96\cancel{mm^2}$
$\underline{\underline{F = 4800N = 4,8kN}}$

(6)
$A = l \cdot d$
$A = 10mm \cdot 11mm$
$\underline{\underline{A = 110mm^2}}$

$p = \frac{F}{A}$
$p = \frac{4000N}{110mm^2}$
$\underline{\underline{p = 36,4\frac{N}{mm^2}}}$

(7)
$p = \frac{F}{A}$
$A = \frac{F}{p}$
$A = \frac{3000\cancel{N} \cdot mm^2}{2\cancel{N}}$
$\underline{\underline{A = 1500mm^2}}$

$A = l \cdot d$
$l = \frac{A}{d}$
$l = \frac{1500mm^{\cancel{2}}}{30\cancel{mm}}$
$\underline{\underline{l = 50mm}}$

(8)
$A = l \cdot d$
$A = 15mm \cdot 10mm$
$\underline{\underline{A = 150mm^2}}$

$p = \frac{F}{A}$
$p = \frac{6000N}{150mm^2}$
$\underline{\underline{p = 40\frac{N}{mm^2}}}$

42.3

(1)
$A = \frac{d^2 \cdot \pi}{4}$
$A = \frac{10^2mm^2 \cdot 3,14}{4}$
$\underline{\underline{A = 78,5mm^2}}$

$\tau = \frac{F}{A}$
$\tau = \frac{12000N}{78.5mm^2}$
$\underline{\underline{\tau = 153\frac{N}{mm^2}}}$

42.3

(2)
$A = \frac{d^2 \cdot \pi}{4}$
$A = \frac{12^2mm^2 \cdot 3,14}{4}$
$\underline{\underline{A = 113mm^2}}$
$\tau = \frac{F}{A}$
$F = \tau \cdot A$
$F = 80\frac{N}{mm^2} \cdot 113mm^2$
$\underline{\underline{F = 9040N = 9,04kN}}$

(3)
$A = 2 \cdot \frac{d^2 \cdot \pi}{4}$
$A = \frac{10^2mm^2 \cdot 3,14}{2}$
$A = 157mm^2$

$\tau = \frac{F}{A}$

$F = \tau \cdot A$
$F = 50\frac{N}{\cancel{mm^2}} \cdot 157\cancel{mm^2}$
$\underline{\underline{F = 7850N = 7,85kN}}$

④ $\frac{d - 4mm}{10mm} = \frac{1}{50}$

$d = \frac{10}{50}\ mm + 4mm$

$d = 4{,}2mm$

$\tau = \frac{F}{A}$

$\tau = \frac{1600N \cdot 4}{4{,}2^2 \cdot 3{,}14}$

$\tau = 116\frac{N}{mm^2}$

⑤

$M = F \cdot r$

$F = \frac{M}{r}$

$F = \frac{50N\cancel{m}}{0{,}02\cancel{m}}$

$F = 2500N$

$\tau = \frac{F}{A}$

$\tau = \frac{2500N \cdot 4}{5^2mm^2 \cdot 3{,}14}$

$\tau = 127\frac{N}{mm^2}$

⑥ $F \cdot 8mm = F_1 \cdot 500mm$

$F = \frac{F_1 \cdot 500\cancel{mm}}{8\cancel{mm}}$

$F = \frac{50N \cdot 500}{8}$

$F = 3125N$

$A = 2 \cdot \frac{d^2 \cdot \pi}{4}$

$A = 2 \cdot \frac{4^2mm^2 \cdot 3{,}14}{4}$

$A = 25{,}12mm^2$

$\tau = \frac{F}{A}$

$\tau = \frac{3125N}{25{,}12mm^2}$

$\tau = 124\frac{N}{mm^2}$

42.3

⑦

$\tau = \frac{F}{A}$

$A = \frac{F}{\tau}$

$A = \frac{22600\cancel{N} \cdot mm^2}{100\cancel{N}}$

$A = 226mm^2$

$A = 2 \cdot \frac{d^2 \cdot \pi}{4}$

$d^2 = \frac{4 \cdot A}{2 \cdot \pi}$

$d = \sqrt{\frac{4 \cdot A}{2 \cdot \pi}}$

$d = \sqrt{\frac{4 \cdot 226mm^2}{2 \cdot 3{,}14}}$

$d = 12mm$

⑧ $F_2 \cdot \cancel{20mm} = F_1 \cdot \overset{5}{\cancel{100mm}}$

$F_2 = F_1 \cdot 5$

$F_2 = 500N \cdot 5$

$F_2 = 2500N$

$\tau = \frac{F \cdot 4}{2 \cdot d^2 \cdot \pi}$

$\tau = \frac{2500N \cdot 4}{2 \cdot 8^2mm^2 \cdot 3{,}14}$

$\tau = 25\ \frac{N}{mm^2}$

42.4

42.4

① $\tau = \frac{F}{A}$

$\tau = \frac{8000N \cdot 4}{19^2mm^2 \cdot 3{,}14}$

$\tau = 28{,}23\frac{N}{mm^2}$

$p = \frac{F}{A}$

$p = \frac{8000N}{19mm \cdot 15mm}$

$p = 28\frac{N}{mm^2}$

② $\tau = \frac{F}{A}$

$F = \tau \cdot A$

$F = 100\frac{N}{mm^2} \cdot 13^2\ mm^2 \cdot 3{,}14 \cdot \frac{1}{4}$

$F = 13267N$

$p = \frac{F}{A}$

$p = \frac{13267N}{8mm \cdot 13mm}$

$p = 128\frac{N}{mm^2}$

③ $\tau = \frac{F}{A}$

$\tau = \frac{15000N \cdot 4}{2 \cdot 17^2mm^2 \cdot 3{,}14}$

$\tau = 33\frac{N}{mm^2}$

$p = \frac{F}{A}$

$p = \frac{15000N}{17mm \cdot 12mm}$

$p = 74\frac{N}{mm^2}$

④
$$\tau = \frac{F}{A}$$
$$A = \frac{F}{\tau}$$
$$A = \frac{18000\cancel{N}\ mm^2}{40\cancel{N}}$$
$$A = 450mm^2$$
$$A = 2\cdot\frac{d^2\cdot\pi}{4}$$
$$d^2 = \frac{\cancel{4}\,2\cdot A}{\cancel{2}\cdot\pi}$$
$$d = \sqrt{\frac{2\cdot A}{\pi}}$$
$$d = \sqrt{\frac{2\cdot 450mm^2}{3{,}14}}$$
$$\underline{\underline{d = 17mm}}$$

⑤
$$\tau = \frac{F}{A}$$
$$\tau = \frac{F\cdot 4}{2\cdot 3\cdot d^2\cdot\pi}$$
$$\tau = \frac{64000N\cdot 4}{2\cdot 3\cdot 13^2mm^2\cdot 3{,}14}$$
$$\underline{\underline{\tau = 80\frac{N}{mm^2}}}$$

⑦
$$\tau = \frac{F}{A}$$
$$\tau = \frac{F\cdot 4}{2\cdot 4\cdot d^2\cdot\pi}$$
$$\tau = \frac{60000N\cdot 4}{2\cdot 4\cdot 13^2mm^2\cdot 3{,}14}$$
$$\underline{\underline{\tau = 56{,}5\frac{N}{mm^2}}}$$

⑥
$$\tau = \frac{F}{A}$$
$$\tau = \frac{F\cdot 4}{2\cdot d^2\cdot\pi}$$
$$F = \frac{\tau\cdot\pi\cdot d^2}{2}$$
$$F = \frac{80N\cdot 13^2\cancel{mm^2}\cdot 3{,}14}{\cancel{mm^2}\ 2}$$
$$\underline{\underline{F = 21226N = 21{,}226kN}}$$

⑧
$$\tau = \frac{F}{A}$$
$$\tau = \frac{F\cdot\cancel{4}}{\cancel{4}\cdot d^2\cdot\pi}$$
$$F = \tau\cdot d^2\cdot\pi$$
$$F = 100\frac{N}{\cancel{mm^2}}\cdot 15^2\cancel{mm^2}\cdot 3{,}14$$
$$\underline{\underline{F = 70650N = 70{,}65kN}}$$

$$p = \frac{F}{A}$$
$$p = \frac{70650N}{4\cdot 15mm\cdot 6m}$$
$$\underline{\underline{p = 196\frac{N}{mm^2}}}$$

43.2

43.2

①
$$\tau_m = \frac{F_m}{A}$$
$$F_m = \tau_m\cdot A$$
$$F_m = 320\frac{N}{\cancel{mm^2}}\cdot 20\cancel{mm}\cdot 3{,}14\cdot 3\cancel{mm}$$
$$\underline{\underline{F_m = 60288N = 60{,}288kN}}$$

②
$$\tau_m = \frac{F_m}{A}$$
$$A = \frac{F_m}{\tau_m}$$
$$A = \frac{45000\cancel{N}\cdot mm^2}{240\cancel{N}}$$
$$A = 187{,}5mm^2$$
$$A = 30mm\cdot 3{,}14\cdot x$$
$$x = \frac{A}{30mm\cdot 3{,}14}$$
$$x = \frac{187{,}5mm^{\cancel{2}}}{30\cancel{mm}\cdot 3{,}14}$$
$$\underline{\underline{x = 2mm}}$$

③
$$\tau_m = \frac{F_m}{A}$$
$$F_m = \tau_m\cdot A$$
$$F_m = 200\frac{N}{\cancel{mm^2}}\cdot 50^2\cancel{mm^2}\cdot 3{,}14\cdot\frac{1}{4}$$
$$\underline{\underline{F_m = 392500N = 392{,}5kN}}$$

④
$$\tau_m = \frac{F_m}{A}$$
$$F_m = \tau_m\cdot A$$
$$F_m = 160\frac{N}{\cancel{mm^2}}\cdot 21\cancel{mm}\cdot 3{,}14\cdot 2{,}5\cancel{mm}$$
$$\underline{\underline{F_m = 26376N = 26{,}376kN}}$$

⑤
$$\tau_m = \frac{F_m}{A}$$
$$F_m = \tau_m\cdot A$$
$$F_m = 180\frac{N}{\cancel{mm^2}}\cdot(2\cdot 100 + 2\cdot 80)\cancel{mm}\ 4\cancel{mm}$$
$$\underline{\underline{F_m = 259200N = 259{,}2kN}}$$

⑥
$$A = (2\cdot 50 + 2\cdot 30)mm\cdot 4mm$$
$$A = 640mm^2$$
$$\tau_m = \frac{F_m}{A}$$
$$F_m = \tau_m\cdot A$$
$$F_m = 200\frac{N}{\cancel{mm^2}}\cdot 640\cancel{mm^2}$$
$$\underline{\underline{F_m = 128000N = 128kN}}$$

⑦
$$x^2 = 24^2 + 40^2$$
$$x = \sqrt{24^2 + 40^2}$$
$$x = 46{,}6mm$$
$$A = (24+40+46{,}6)mm\cdot 3mm$$
$$A = 332mm^2$$
$$\tau_m = \frac{F_m}{A}$$
$$F_m = \tau_m\cdot A$$
$$F_m = 160\frac{N}{\cancel{mm^2}}\cdot 332\cancel{mm^2}$$
$$\underline{\underline{F_m = 53088N = 53kN}}$$

⑧
$$A_1 = 10{,}5mm\cdot 3{,}14\cdot 2mm$$
$$A_1 = 66mm^2$$
$$A_2 = 21mm\cdot 3{,}14\cdot 2mm$$
$$A_2 = 132mm^2$$
$$F_{m1} = \tau_m\cdot A_1$$
$$F_{m1} = 180\frac{N}{\cancel{mm^2}}\cdot 66\cancel{mm^2}$$
$$\underline{\underline{F_{m1} = 11880N = 11{,}9kN}}$$
$$F_{m2} = \tau_m\cdot A_2$$
$$F_{m2} = 180\frac{N}{\cancel{mm^2}}\cdot 132\cancel{mm^2}$$
$$\underline{\underline{F_{m2} = 23760N = 23{,}8kN}}$$

Dieter Hermanns
Wolfgang Klemmstein

Lernen ohne Sprachbarrieren Techn. Mathematik Metall

Schülerausgabe

Deutsche Gesellschaft
für Technische Zusammenarbeit
(GTZ) GmbH

Dieter Hermanns
Wolfgang Klemmstein

Lernen ohne Sprachbarrieren

Technische Mathematik Metall

Deutsche Gesellschaft
für Technische Zusammenarbeit
(GTZ) GmbH, Eschborn
Federal Republic of Germany

Sonderausgabe für Projekte
der Gewerblichen Berufsausbildung
in Ländern der Dritten Welt

Inhaltsverzeichnis

Contents

Sommaire

Indice

Informationsblätter **Information sheets** **Fiches d'information** **Hojas informatives**	**Arbeitsblätter** **Work sheets** **Fiches de problémes** **Hojas de trabajo**
1.1	1.2
2.1	2.2
3.1 .2	3.3
4.1	4.2
5.1	5.2
6.1	6.2
7.1	7.2 .3
8.1	8.2
9.1	9.2
10.1	10.2 .3
11.1 .2	11.3 .4
12.1	12.2
13.1	13.2
14.1 .2	14.3
15.1	15.2
16.1	16.2
17.1	17.2
18.1	18.2 .3
19.1	19.2
20.1	20.2
21.1 .2	21.3 .4
22.1	22.2 .3
23.1	23.2
24.1	24.2
25.1 .2	25.3 .4
26.1 .2	26.3 .4 .5
27.1	27.2
28.1	28.2
29.1	29.2 .3
30.1	30.2
31.1 .2 .3	31.4 .5
32.1 .2	32.3 .4
33.1 .2 .3	33.4 .5
34.1	34.2
35.1 .2 .3	35.4 .5
36.1	36.2 .3
37.1 .2	37.3 .4
38.1 .2	38.3
39.1 .2	39.3 .4
40.1 .2	40.3 .4
41.1 .2	41.3 .4
42.1 .2	42.3 .4
43.1	43.2
62	63

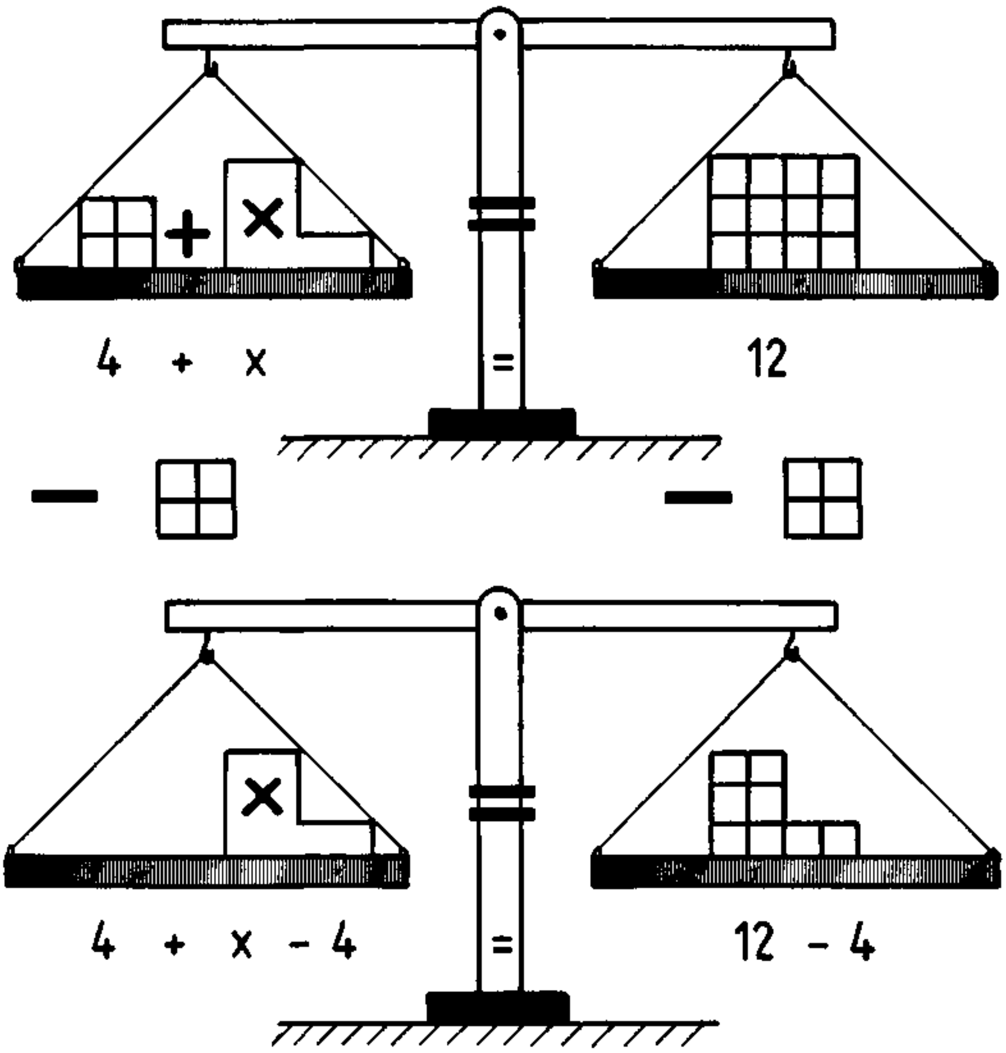

$$\underline{\underline{x = 8}}$$

1.

$x + 17 = 61$

$x = ?$

$x + 17 = 61$

$x = 61 - 17$

$\underline{\underline{x = 44}}$

2.

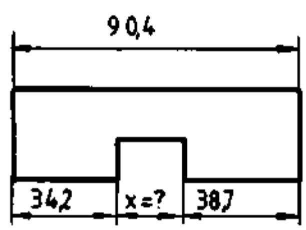

34,2mm + x + 38,7mm = 90,4mm

x = 90,4mm - 34,2mm - 38,7mm

$\underline{\underline{x = 17,5mm}}$

Test:

a) x = ?

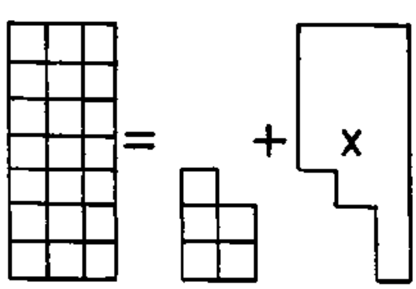

x =

b) x = ?

$25 + x = 40$

x =

c)

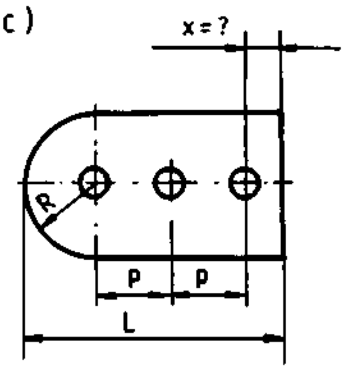

x =

a) x = 16 b) x = 15 c) x = L - R - 2p

(1)

a) $48 - x = 19 \quad ; x = ?$

b) $1,5 = 4,83 - x \; ; x = ?$

a) $x = \boxed{}$ b) $x = \boxed{}$

(2)

a) $30,48 - 12,44 - x = 9,92$
$x = ?$

b) $x - 13,64 - 12,8 = 96,4$
$x = ?$

a) $x = \boxed{}$ b) $x = \boxed{}$

(3)

a) $4x + 12 = 32 \quad ; x = ?$

b) $80 - 2x = 68 \quad ; x = ?$

a) $x = \boxed{}$ b) $x = \boxed{}$

(4)

a) $420 - 44,28 = 280,1 + l$
$l = ?$

b) $100,2 - L = 88,6$
$L = ?$

a) $l = \boxed{}$ b) $L = \boxed{}$

(5)

a) $\frac{5}{8}'' + x = \frac{9}{12}'' \quad ; x = ?$

b) $42\frac{3}{4}\text{ft} - x = 39\frac{2}{3}\text{ft}; \; x = ?$

a) $x = \boxed{}$ "; b) $x = \boxed{}$ ft

(6)

a) $422,82\text{mm} - 2x = 311\text{mm}$
$x = ?$

b) $x - 39,9\text{mm} = 60,21\text{mm}$
$x = ?$

a) $x = \boxed{}$ mm; b) $x = \boxed{}$ mm

(7)

a) $\frac{d_1}{2} + \frac{d_2}{2} = a \quad ; d_1 = ?$

b) $V = V_1 - V_2 + V_3 \; ; V_3 = ?$

a) $d_1 = \boxed{}$

b) $V_3 = \boxed{}$

(8)

a) $a = \frac{d_1}{2} + d_2 + \frac{d_3}{2}$

$d_2 = ?$

b) $A = A_1 + A_2 - A_3 \; , A_3 = ?$

a) $d_2 = \boxed{}$

b) $A_3 = \boxed{}$

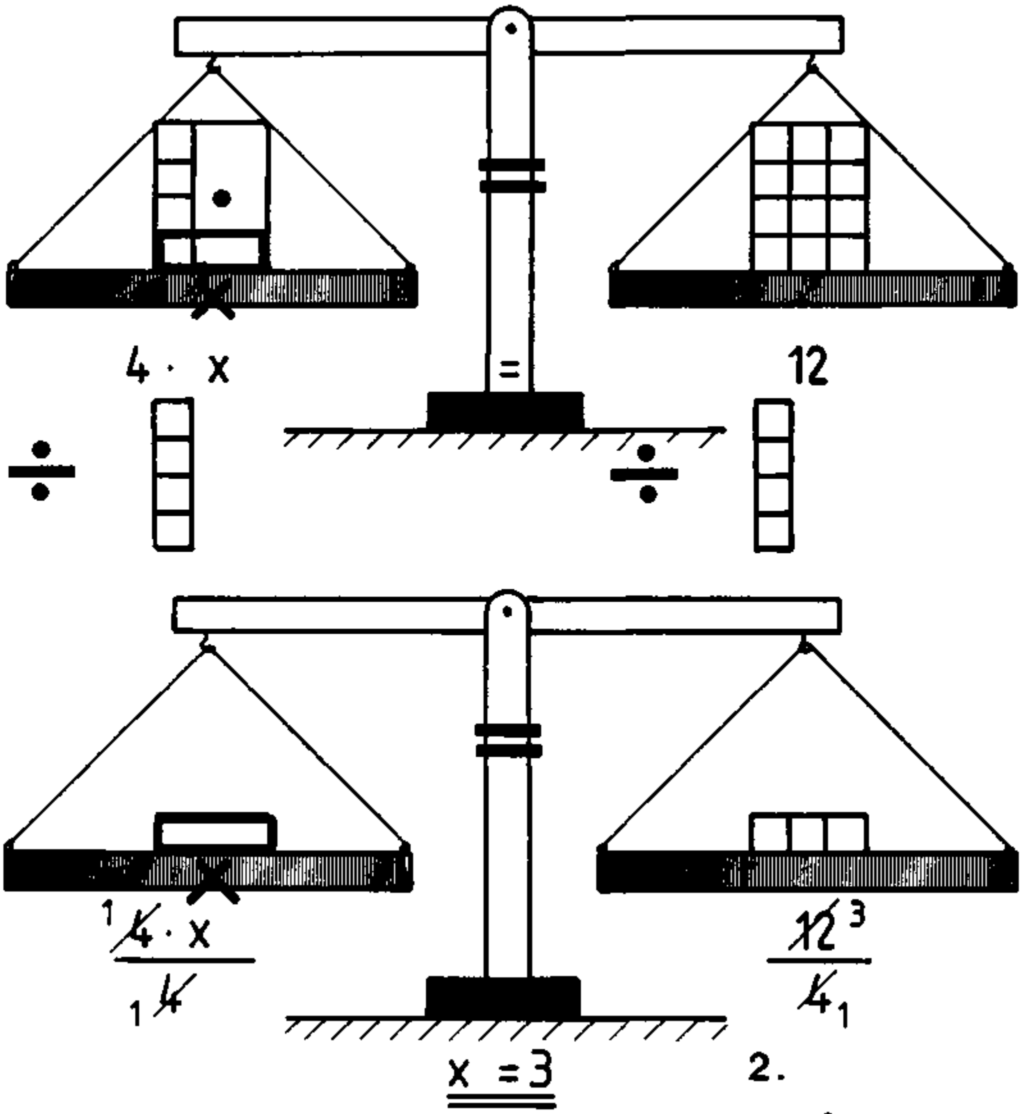

$$\underline{\underline{x = 3}}$$

1.

$15 \cdot x = 75$

$x = ?$

$15x = 75$

$x = \frac{75}{15}$

$\underline{\underline{x = 5}}$

Test:

2.

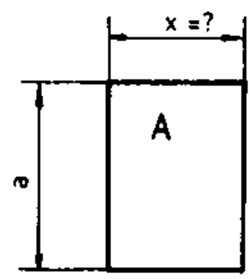

$A = a \cdot x$

$A = a \cdot x$

$a \cdot x = A$

$\underline{\underline{x = \frac{A}{a}}}$

a) $x = ?$

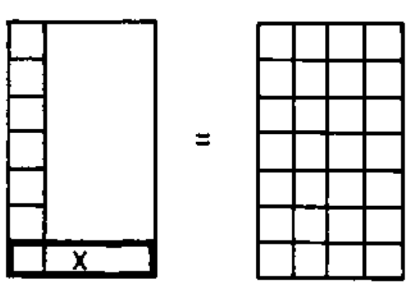

$x =$ ☐

b) $x = ?$

$27 \cdot x = 45$

$x =$ ☐

c)

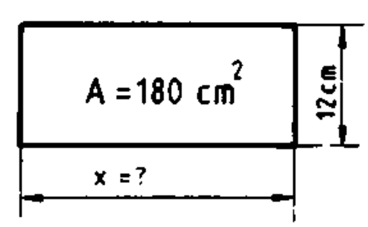

$x =$ ☐ cm

a) x = 4   b) x = 1,67   c) x = 15cm

(1)

a) $\frac{5}{3}x = 12$; $x = ?$

b) $9 = \frac{4x}{18}$; $x = ?$

a) $x =$ ☐ b) $x =$ ☐

(2)

a) $120 = \frac{4 \cdot 12}{x}$; $x = ?$

b) $\frac{5}{x} = \frac{12}{18}$; $x = ?$

a) $x =$ ☐ b) $x =$ ☐

(3)

a) $100 = \frac{20 \cdot h}{3}$; $h = ?$

b) $300 = \frac{A_m \cdot 50}{3}$; $A_m = ?$

a) $h =$ ☐ b) $A_m =$ ☐

(4)

a) $628 = \frac{d \cdot 3{,}14}{2}$; $d = ?$

b) $\frac{1}{v_1} = \frac{5}{36}$; $v_1 = ?$

a) $d =$ ☐ b) $v_1 =$ ☐

(5)

a) $v = d \cdot \pi \cdot n$; $n = ?$

b) $s = m \cdot z \cdot \pi$; $m = ?$

a) $n =$ ☐

b) $m =$ ☐

(6)

a) $F \cdot 2\pi \cdot r = F_{ax} \cdot P$; $r = ?$

b) $i = \frac{z_2 \cdot z_4}{z_1 \cdot z_3}$; $z_1 = ?$

a) $r =$ ☐

b) $z_1 =$ ☐

(7)

a) $\frac{a}{b} = \frac{h}{l}$; $b = ?$

b) $W = \frac{F \cdot s}{t}$; $F = ?$

a) $b =$ ☐

b) $F =$ ☐

(8)

a) $a = \frac{m}{2}(z_1 + z_2)$; $m = ?$

b) $A = \frac{a + b}{2} \cdot h$; $a = ?$

a) $m =$ ☐

b) $a =$ ☐

1.  — ☐

2.  — ☐

3.  — ☐ = ☐

Test :

a) 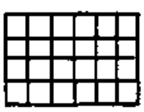 — 12 $

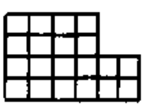 — ? $

b)  — 4 t

 — ? t

c)  — 480 kg

 — ? kg

1.  — ☐ $

 — ☐ t

 — ☐ kg

2.  — ☐ $

 — ☐ t

 — ☐ kg

3. 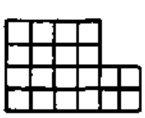 — ☐ $

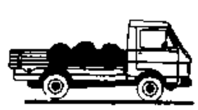 — ☐ t

 — ☐ kg

= ____ $

= ____ t

= ____ kg

a) 10 $ b) 2,4t c) 400kg

gtz		3.2

1.

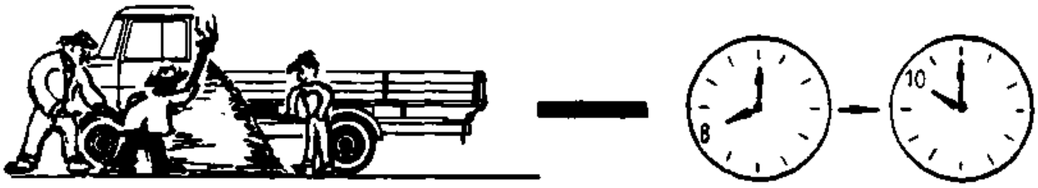

$= 2h$

2.

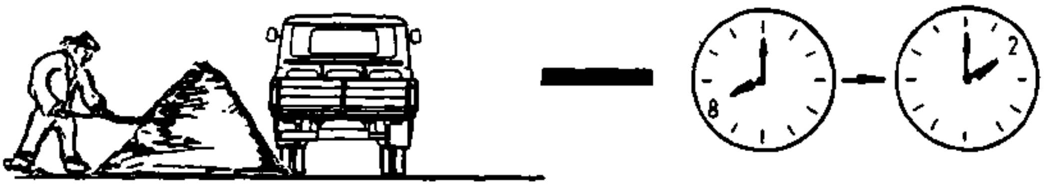

$= 2 \cdot 3 = 6h$

3.

$= \frac{6}{2} = 3h$

Test:

a)

— 2 h

— ? h

b)

— 3 min

— ? min

c)

— 8 h

— ? h

1.

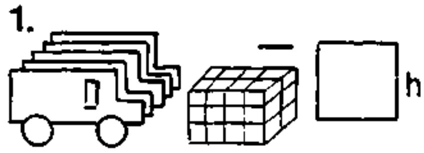

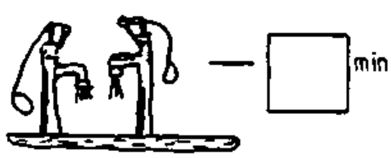

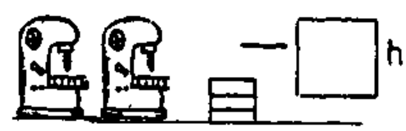

2.

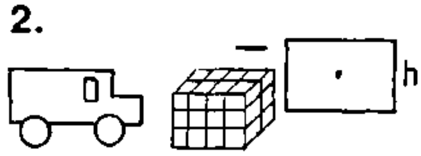

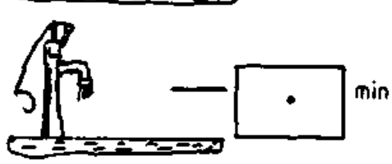

3.

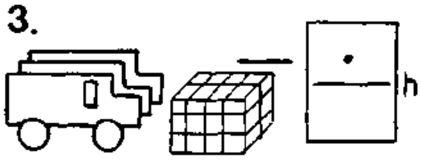

= ——— h

= ——— min

= ——— h

a) 3,3h b) 2min c) 5,33h

(1)

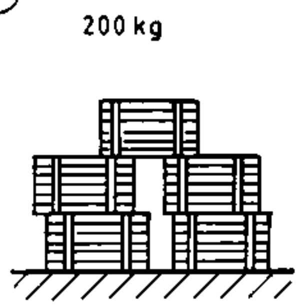

[ ] kg

(2)

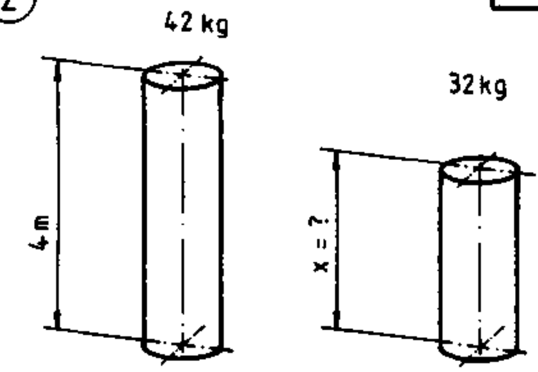

x = [ ] m

(3)

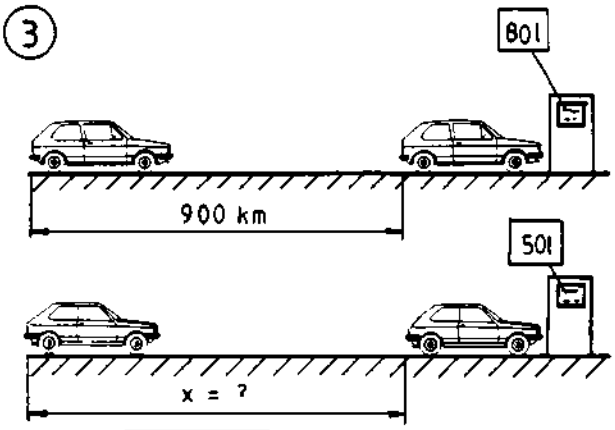

x = [ ] km

(4)

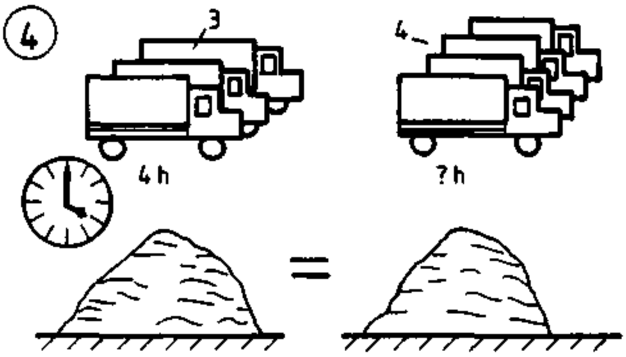

[ ] h

(5)

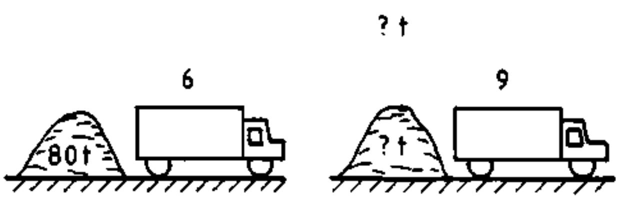

[ ] t

(6)

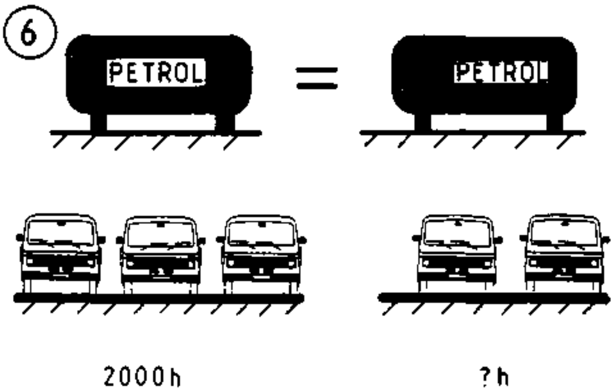

[ ] h

(7)

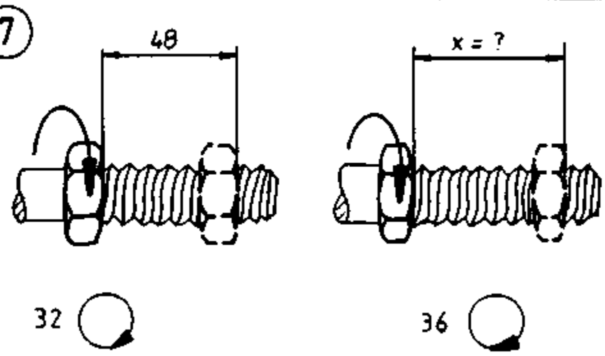

x = [ ] mm

(8)

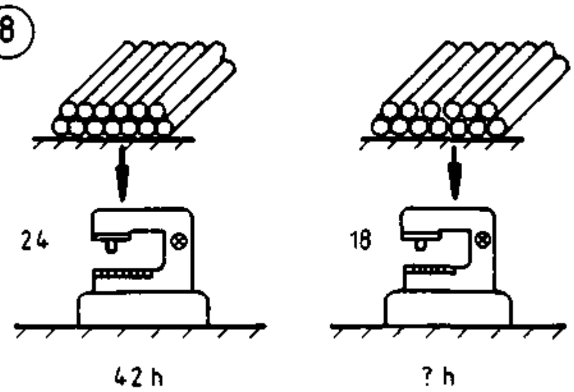

[ ] h

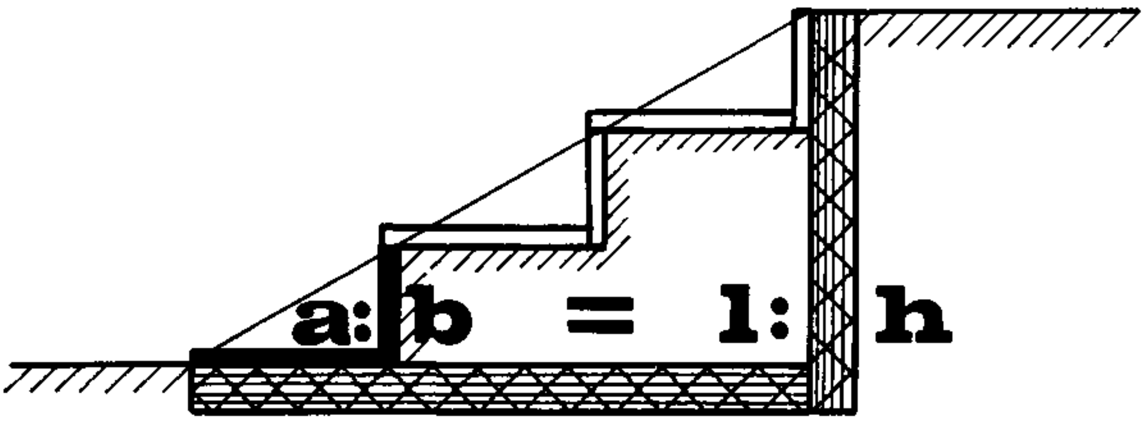

$$\frac{a}{b} = \underline{\qquad}$$

1.

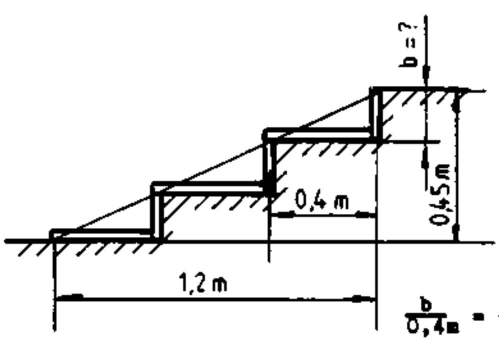

$$\frac{b}{0{,}4\,m} = \frac{0{,}45\,\cancel{m}}{1{,}2\,\cancel{m}}$$

$$b = \frac{0{,}45 \cdot 0{,}4\,m}{1{,}2}$$

$$\underline{\underline{b = 0{,}15\,m}}$$

2.

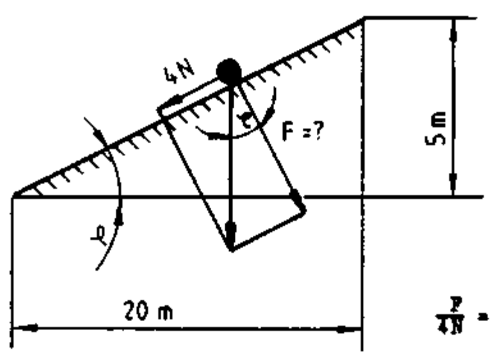

$$\frac{F}{4\,N} = \frac{20\,\cancel{m}}{5\,\cancel{m}}$$

$$F = \frac{20 \cdot 4\,N}{5}$$

$$\underline{\underline{F = 16\,N}}$$

Test:

a)

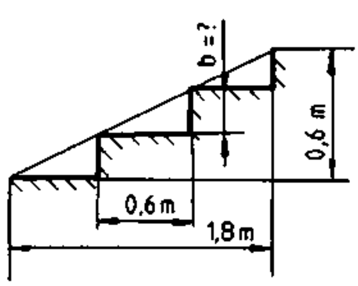

b = ☐ m

b)

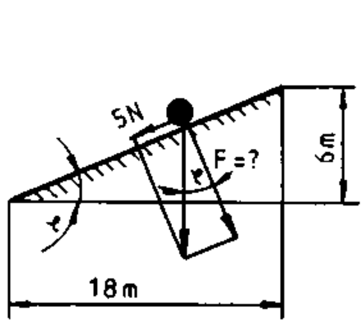

F = ☐ N

c)

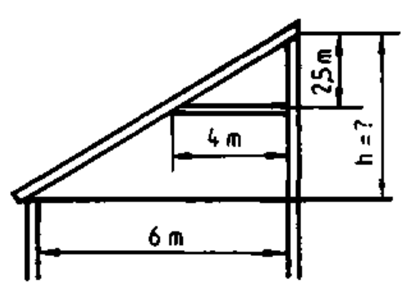

h = ☐ m

c) h = 3,75m b) F = 15N a) b = 0,2m

①

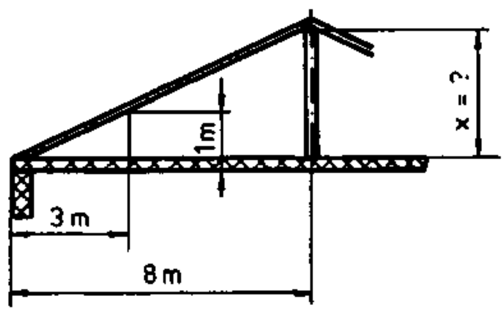

x = ______ m

②

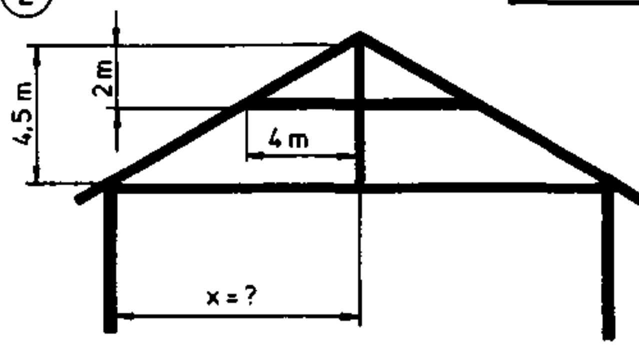

x = ______ m

③

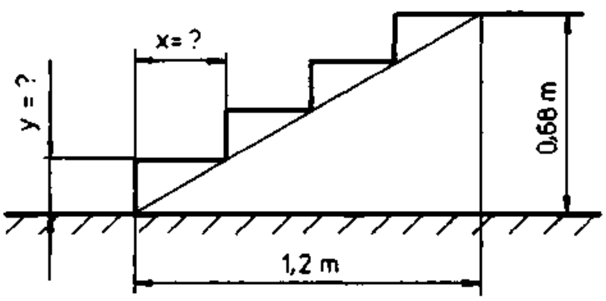

x = ______ m   y = ______ m

④

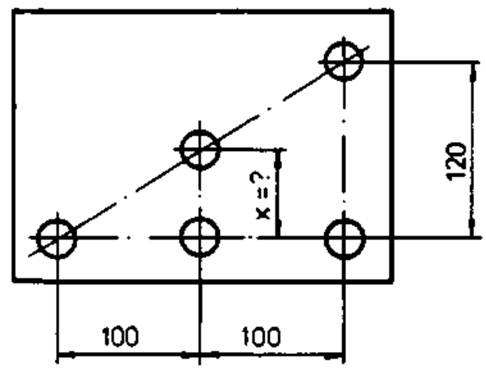

x = ______ mm

⑤

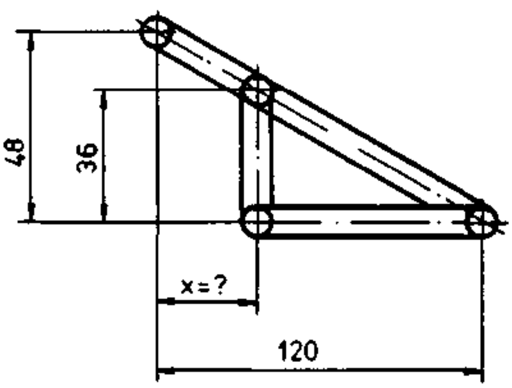

x = ______ mm

⑥

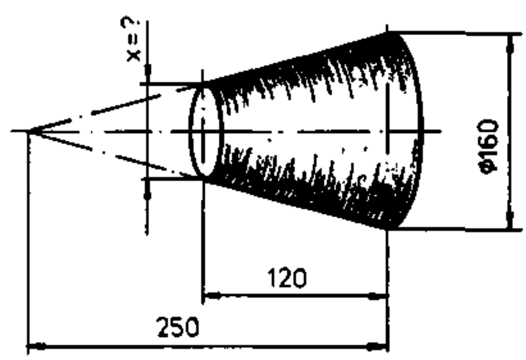

x = ______ mm

⑦

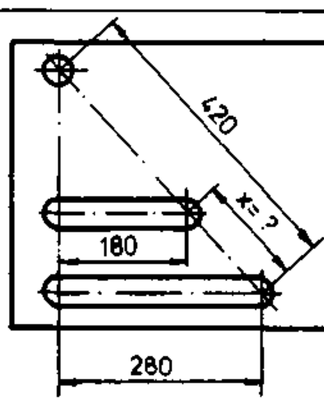

x = ______ mm

⑧

$$\frac{x}{200} = \frac{1}{2}$$

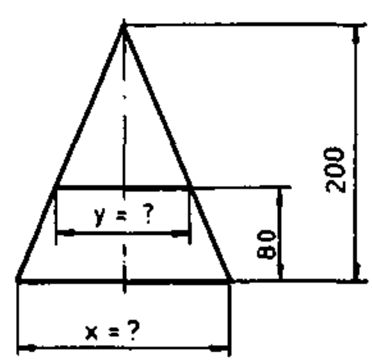

x = ______ mm ; y = ______ mm

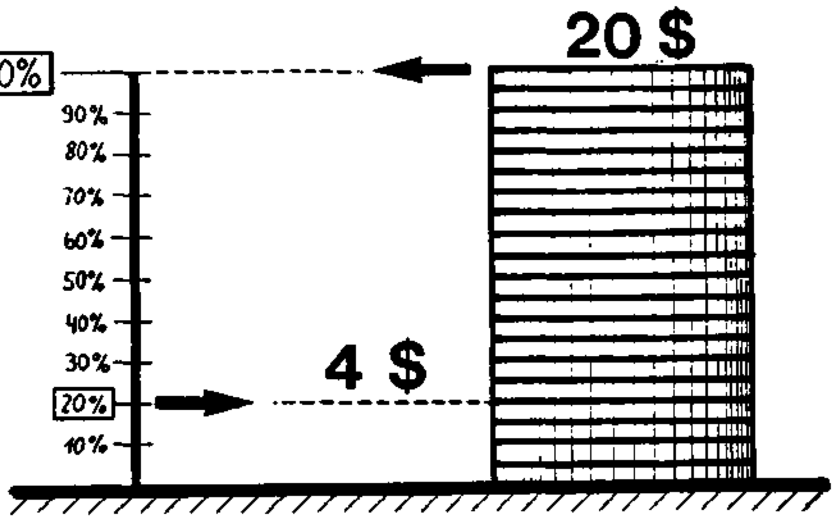

$$100\,\% \mathrel{\widehat{=}} 20\,\$$$
$$20\,\% \mathrel{\widehat{=}} x\,\$$$

$$100\,\% \mathrel{\widehat{=}} 20\,\$$$

$$1\,\% \mathrel{\widehat{=}} \frac{20}{100} = 0{,}2\,\$$$

$$20\,\% \mathrel{\widehat{=}} 0{,}2 \cdot 20 = 4\,\$$$

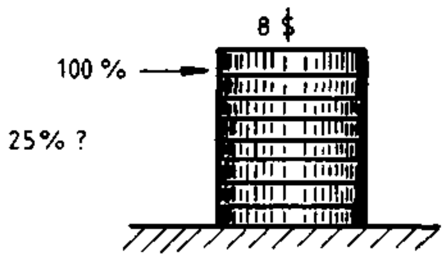

$$100\,\% \mathrel{\widehat{=}} 8\,\$$$
$$25\,\% \mathrel{\widehat{=}} x\,\$$$
$$100\,\% \mathrel{\widehat{=}} 8\,\$$$
$$1\,\% \mathrel{\widehat{=}} \frac{8}{100}\,\$$$
$$25\,\% \mathrel{\widehat{=}} \frac{8 \cdot 25}{100}\,\$$$
$$25\,\% \mathrel{\widehat{=}} 2\,\$$$

Test:

a)

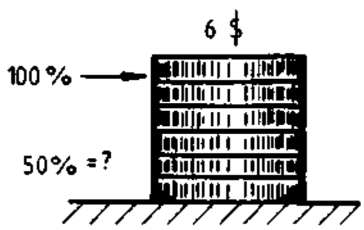

b)

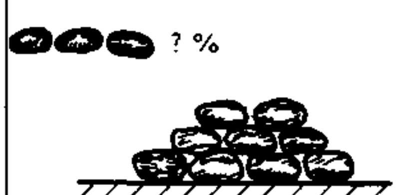

c)

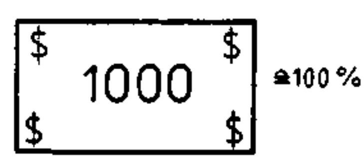

12 % = ?

50 % ≙ ☐ $	3 ⬬ ≙ ☐ %	12% ≙ ☐ $

c) 120$ b) 33,3% a) 3$

(1)

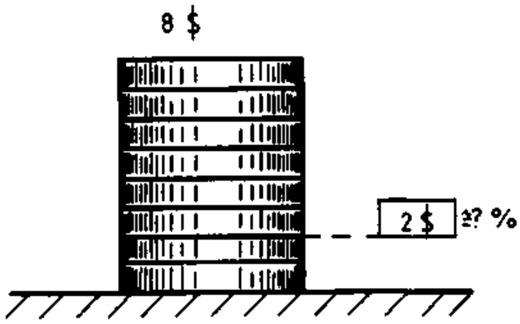

2 $ ≙ ______ %

(2)

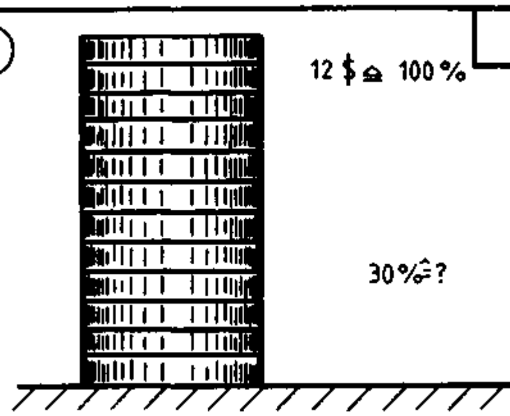

30% ≙ ______ $

(3)

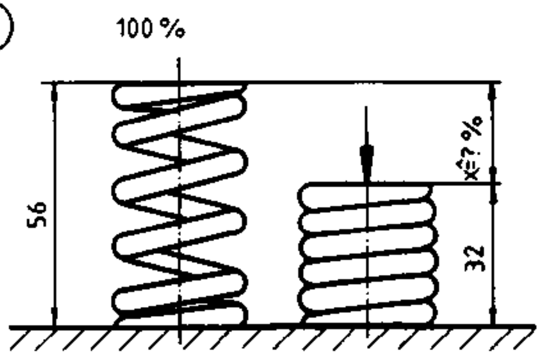

x ≙ ______ %

(4)

25 % ≙ ______

(5)

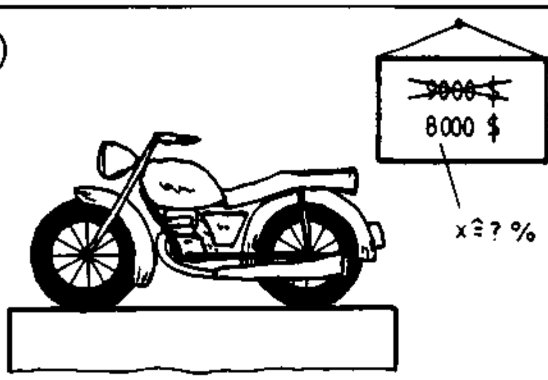

x ≙ ______ %

(6)

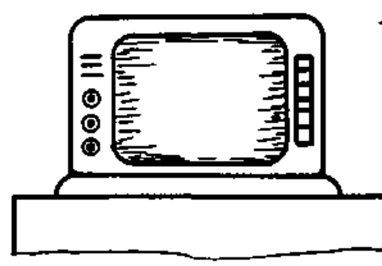

$$\begin{array}{r} 100\,\% \mathrel{\hat{=}} x\ \$ \\ +\ 12\,\% \mathrel{\hat{=}} y\ \$ \\ \hline 112\,\% \mathrel{\hat{=}} 896\ \$ \end{array}$$

x ≙ ______ $; y ≙ ______ $

(7)

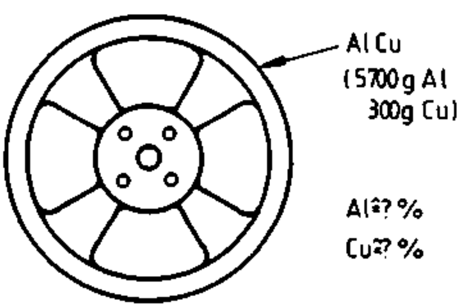

Al ≙ ______ %; Cu ≙ ______ %

(8)

$v_1 = ?$ 100 %

$v_2 = 160$ km/h + 22 %

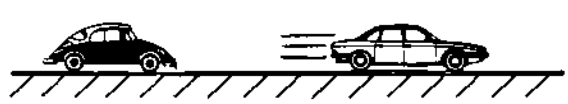

v_1 = ______ km/h

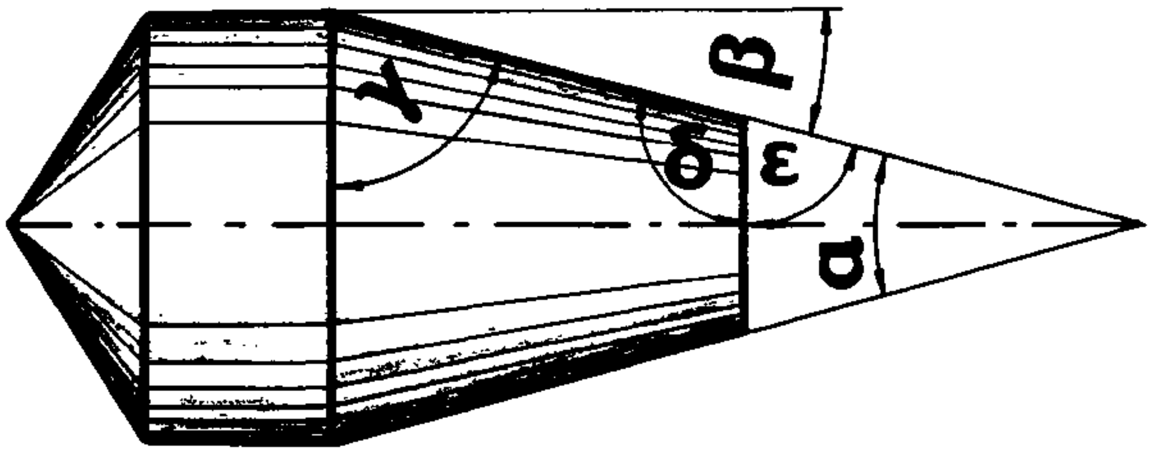

$\beta =$	
$\beta + \gamma =$	°
$\gamma =$	
$\delta + \varepsilon =$	°
$\gamma + \frac{\alpha}{2} =$	°

Test:

a)

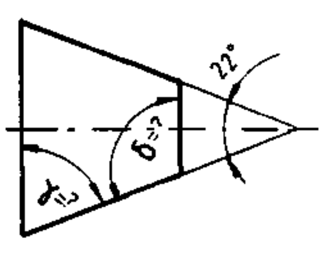

b)

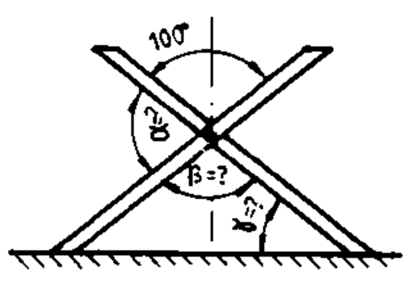

c)

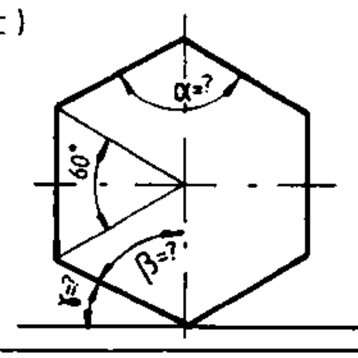

a)	b)	c)
$\delta =$ °	$\alpha =$ ° $\beta =$ °	$\alpha =$ ° $\beta =$ °
$\gamma =$ °	$\gamma =$ °	$\gamma =$ °

a) $\delta = 101°$ $\gamma = 79°$ b) $\alpha = 80°, \beta = 100°, \gamma = 40°$ c) $\alpha = 120°, \beta = 60°, \gamma = 30°$

1

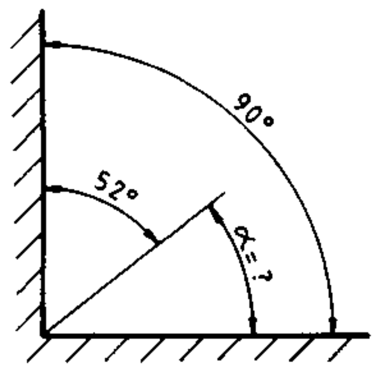

$\alpha = \square\,°$

2

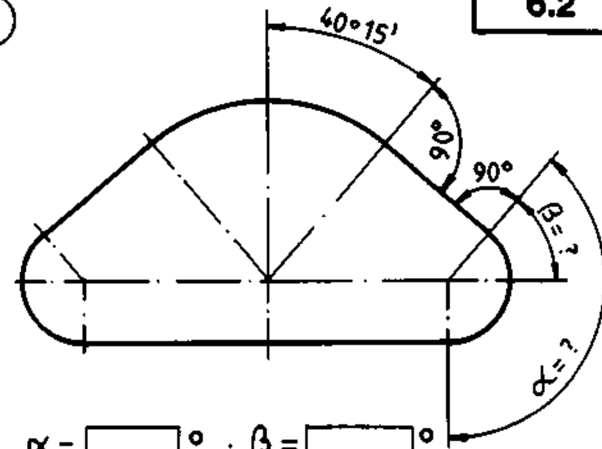

$\alpha = \square\,°$; $\beta = \square\,°$

3

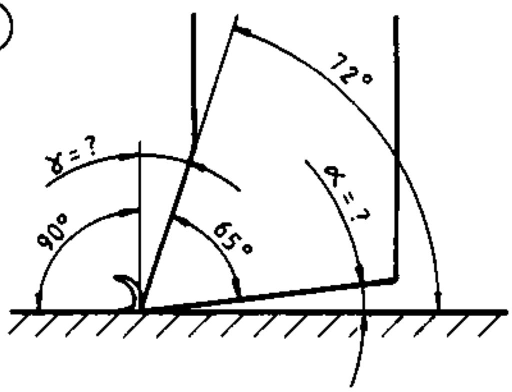

$\alpha = \square\,°$; $\gamma = \square\,°$

4

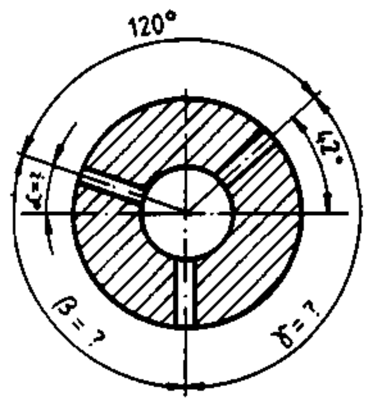

$\alpha = \square\,°$; $\beta = \square\,°$; $\gamma = \square\,°$

5

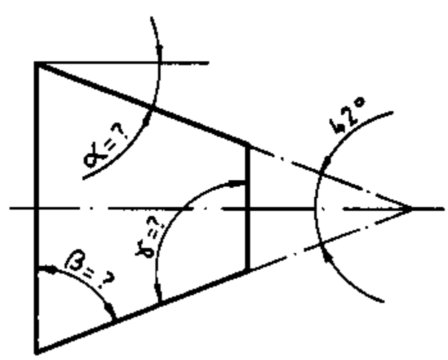

$\alpha = \square\,°$; $\beta = \square\,°$; $\gamma = \square\,°$

6

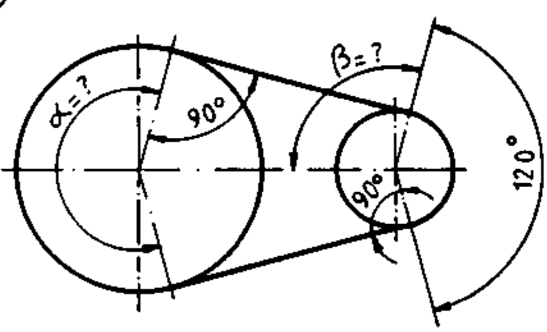

$\alpha = \square\,°$; $\beta = \square\,°$

7

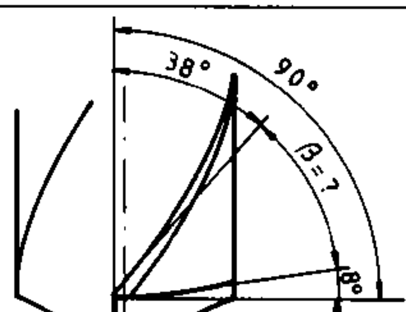

$\beta = \square\,°$

8

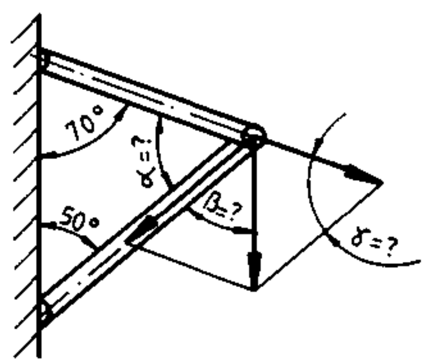

$\alpha = \square\,°$; $\beta = \square\,°$; $\gamma = \square\,°$

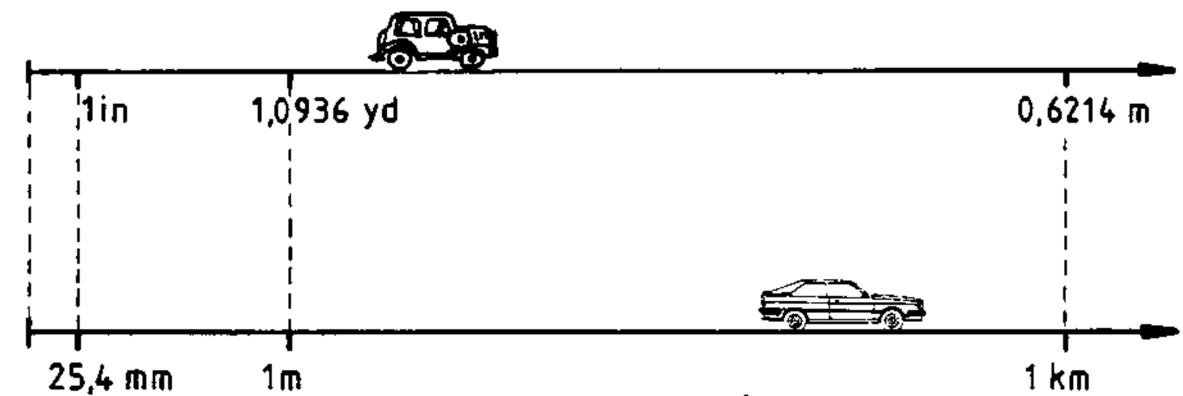

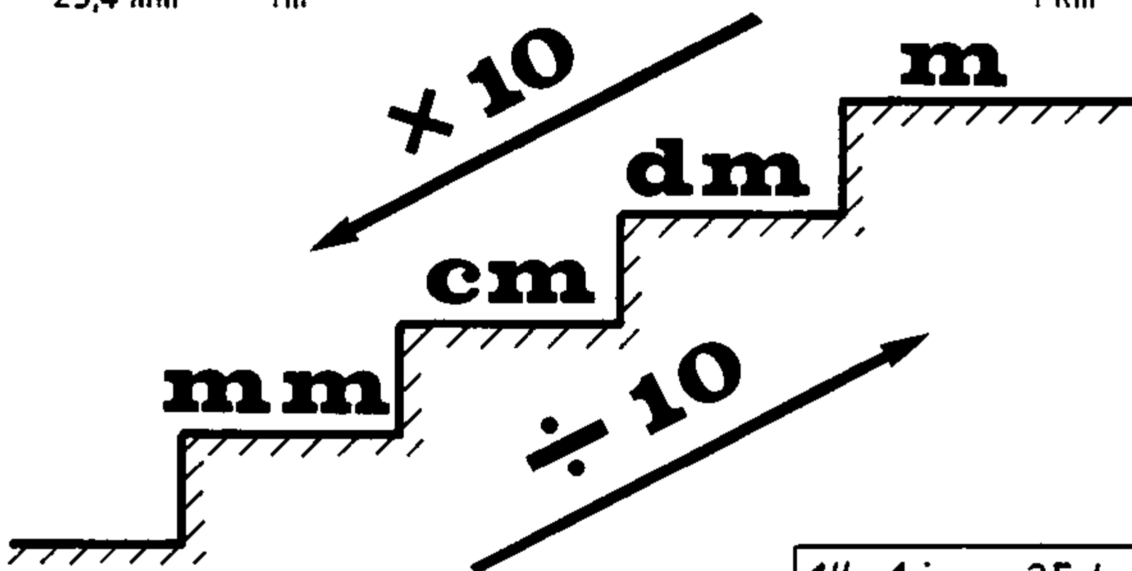

1" = 1 in = 25,4mm

1m = ☐ dm = ☐ cm = ☐ mm

Test :

a)

	in	mm	cm
1.		22,225	
2	$\frac{3}{4}$		
3.	$\frac{5}{8}$		

1. 22,225mm = 2,2225cm = 7/8"
2. $\frac{3}{4}$" = 19,05mm = 1,905cm
3. $\frac{5}{8}$" = 15,875mm = 1,5875cm

b)

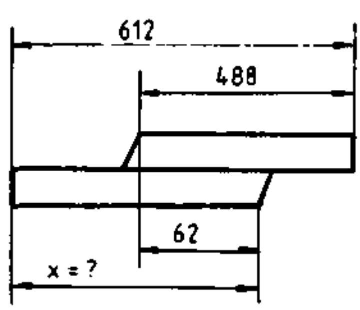

x = ☐ mm

b) x = 186mm

c)

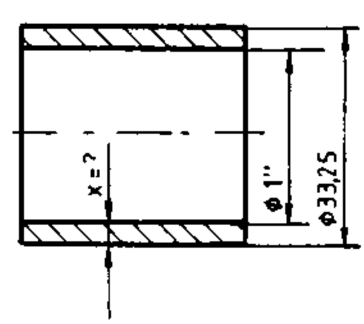

x = ☐ mm

c) x = 3,925mm

7.2

(1)

	mm	cm	dm	m
a)		80		
b)	4000			
c)			1,2	
d)				0, 2

(2)

	in	ft	mm
a)		2	
b)	$\frac{3}{8}$		
c)		$1\frac{1}{2}$	
d)	$\frac{3}{4}$		
e)	4		

(3)

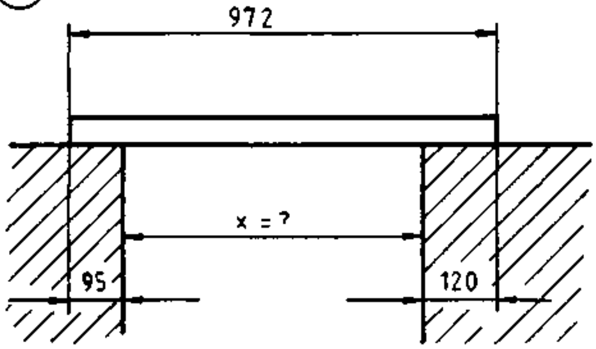

x = [ ] mm

(4)

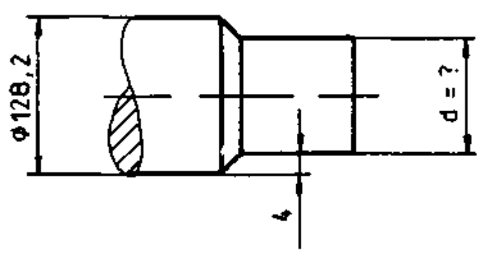

d = [ ] mm

(5)

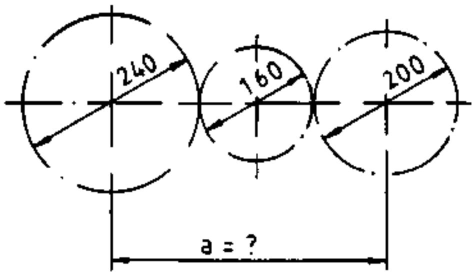

a = [ ] mm

(6)

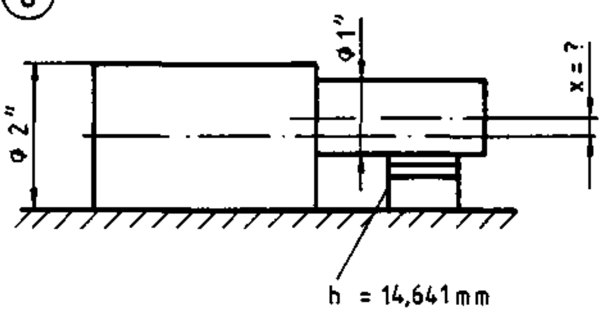

x = [ ] mm

(7)

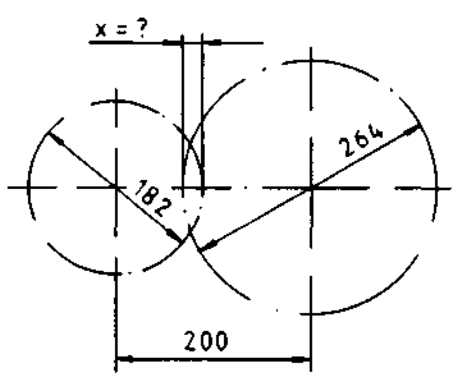

x = [ ] mm

(8)

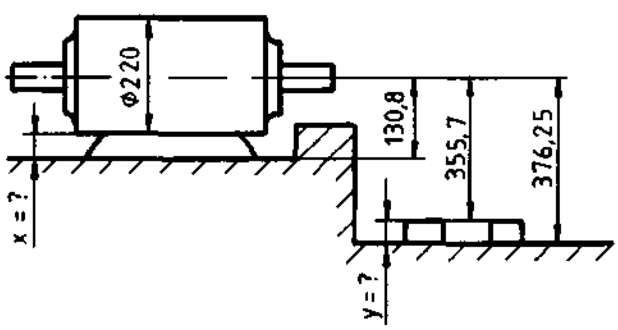

x = [ ] mm ; y = [ ] mm

(9)

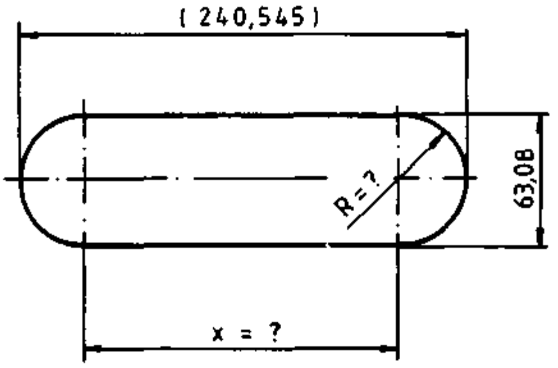

x = ☐ mm ; R = ☐ mm

(10)

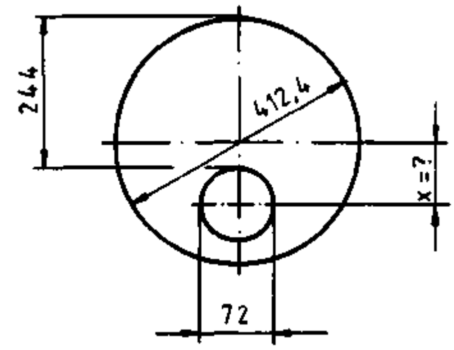

x = ☐ mm

(11)

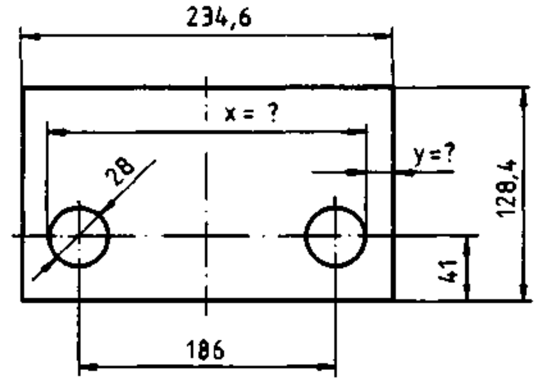

x = ☐ mm ; y = ☐ mm

(12)

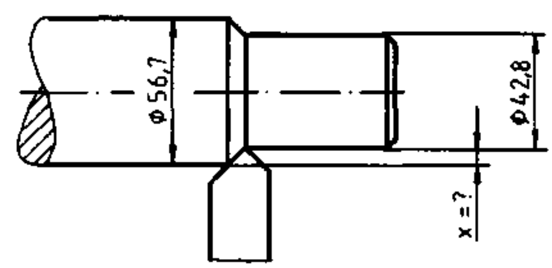

x = ☐ mm

(13)

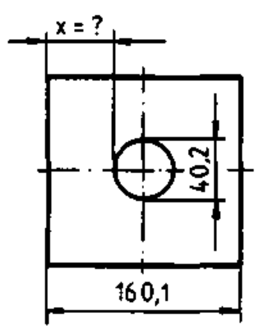

x = ☐ mm

(14)

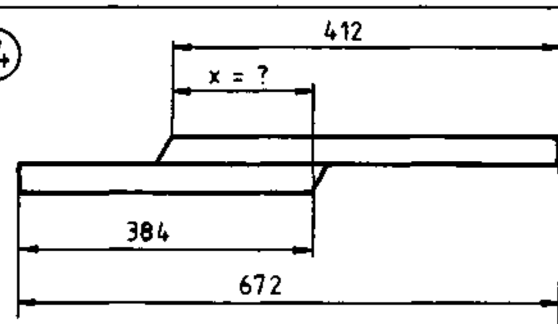

x = ☐ mm

(15)

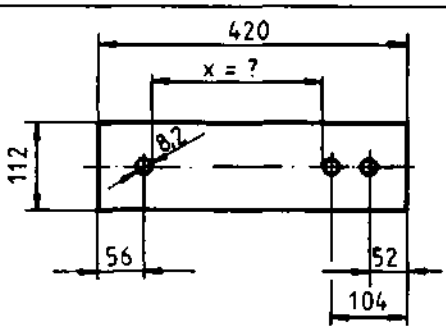

x = ☐ mm

(16)

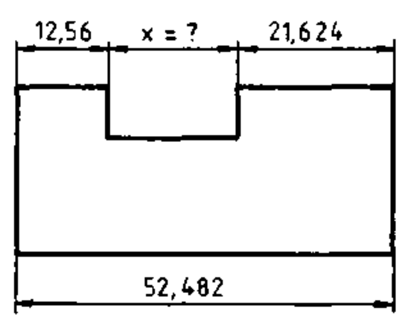

x = ☐ mm

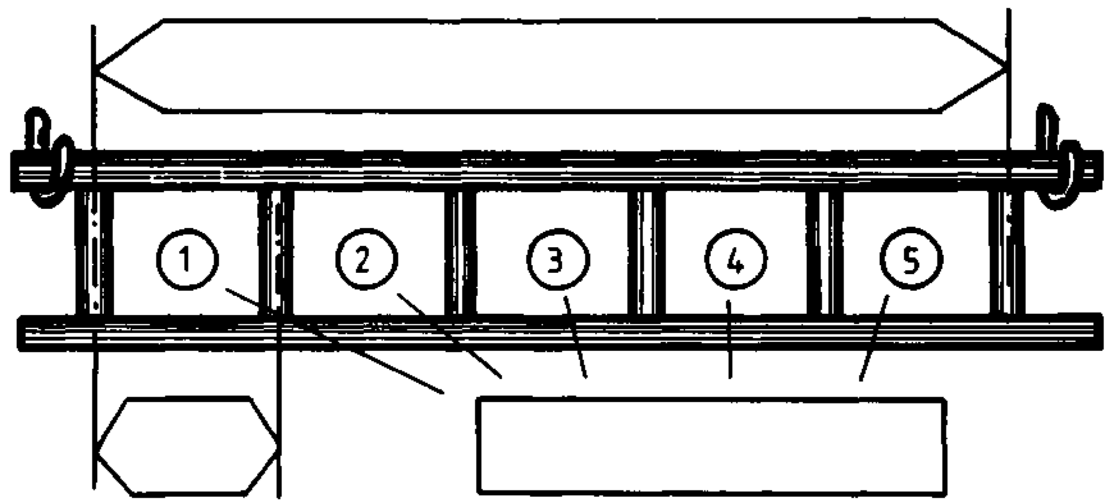

= ×

$L = \cdot$

1.

n = ?   p = ?

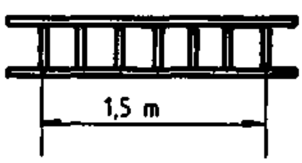

$n = 6$
$L = p \cdot n$
$p = \frac{L}{n}$
$p = \frac{1,5m}{6}$
$\underline{\underline{p = 0,25m}}$

2.

p = ?

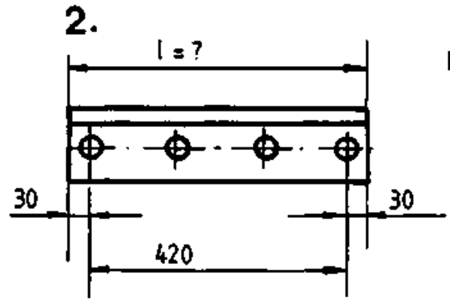

$L = p \cdot n$
$p = \frac{L}{n}$
$p = \frac{420mm}{3}$
$\underline{\underline{p = 140mm}}$

$l = L + 2 \cdot 30mm$
$l = 420mm + 60mm$
$\underline{\underline{l = 480mm}}$

Test :

a) n = ?   p = ?

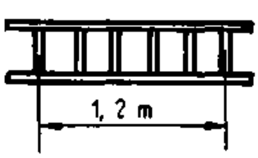

b) n = ?   p = ?

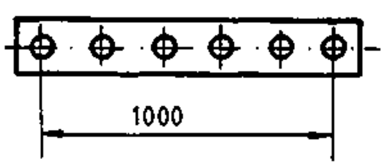

c) n = ?

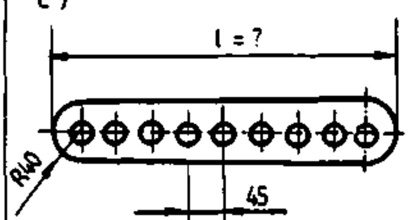

n = [ ]	n = [ ]	n = [ ]
p = [ ] mm	p = [ ] mm	l = [ ] mm

a) n = 5   p = 240mm   b) n = 5   p = 200mm   c) n = 8   p = 440mm

1

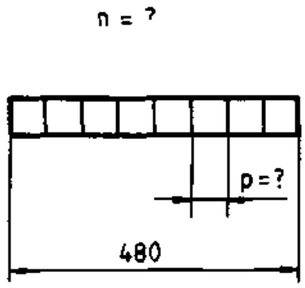

p = ☐ mm ; n = ☐

2

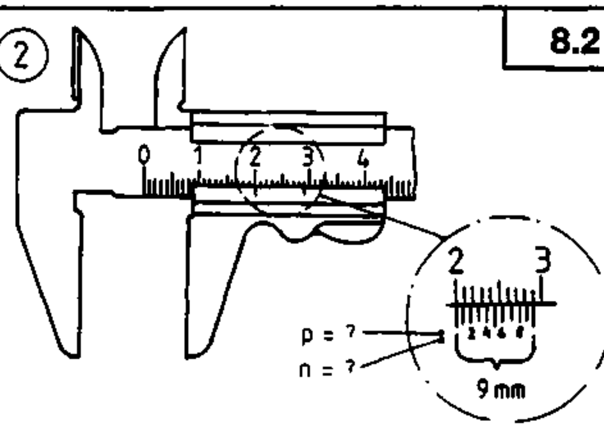

p = ☐ mm ; n = ☐

3

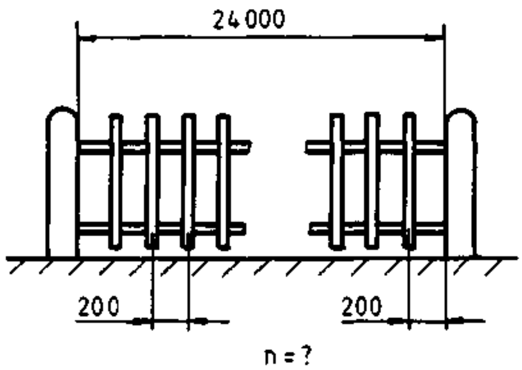

n = ☐

4

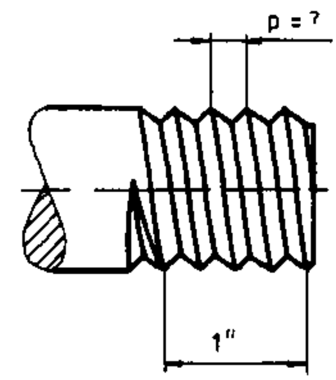

p = ☐ mm

5

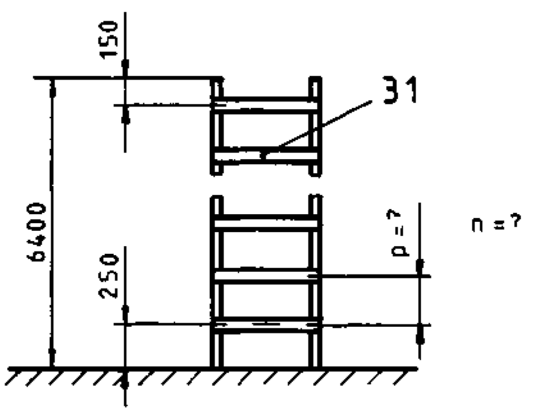

n = ☐ ; p = ☐ mm

6

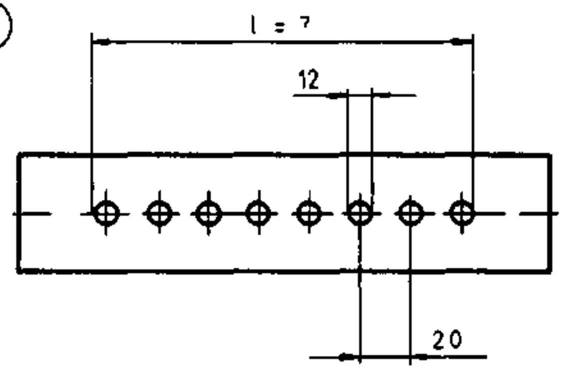

l = ☐ mm

7

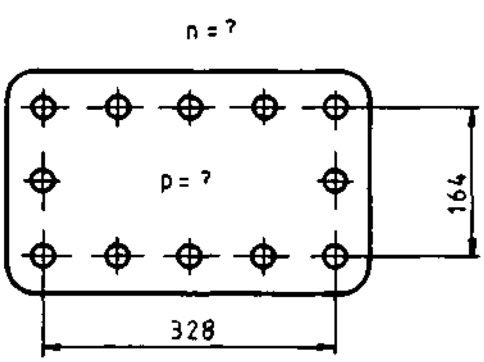

p = ☐ mm ; n = ☐

8

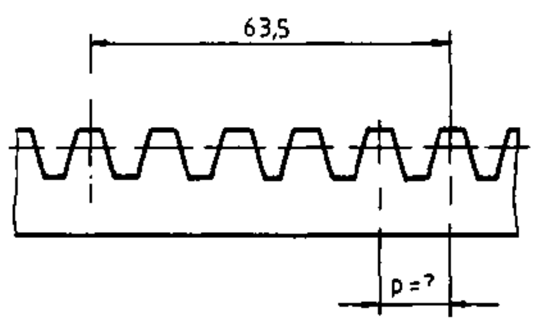

p = ☐ mm ; p = ☐ "

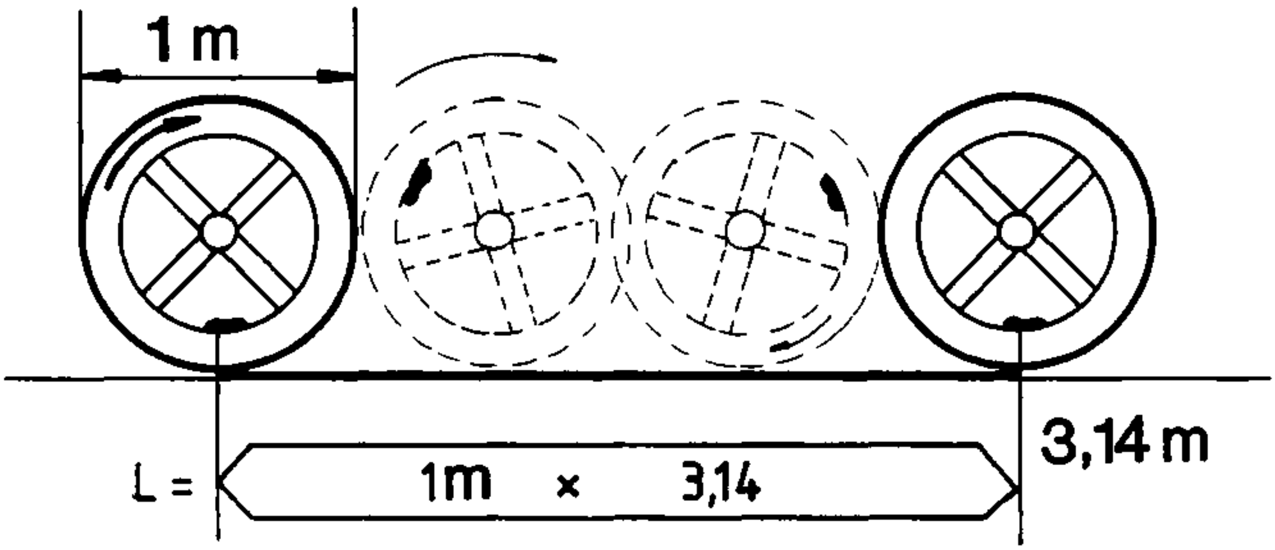

$$\boxed{L = \quad \cdot \quad}$$

1.

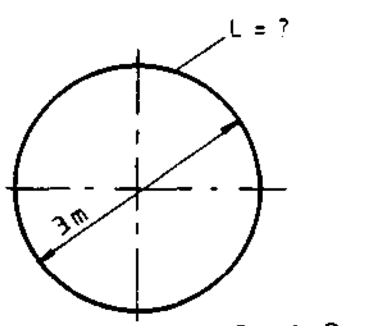

$L = d \cdot \pi$

$L = 3m \cdot 3,14$

$\underline{\underline{L = 9,42m}}$

2.

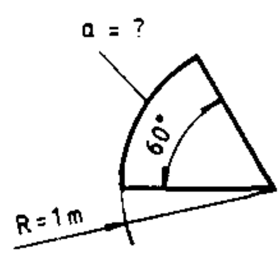

$L = d \cdot \pi \cdot \frac{60^\circ}{360^\circ}$

$L = 2m \cdot 3,14 \cdot \frac{60^\circ}{360^\circ}$

$\underline{\underline{L = 1,047m}}$

Test:

a)

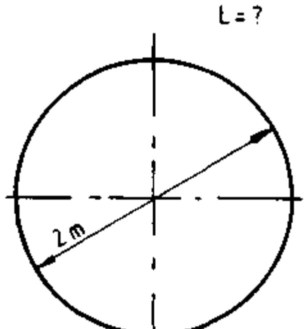

L = ______ m

b)

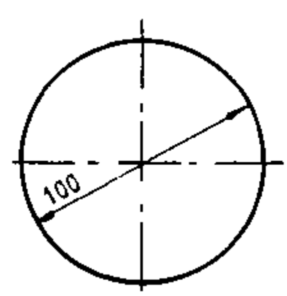

L = ______ mm

c)

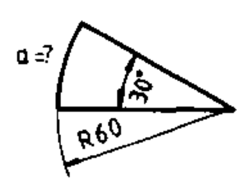

a = ______ mm

a) L = 6,28m   b) L = 314mm   c) a = 31,4mm

9.2

1

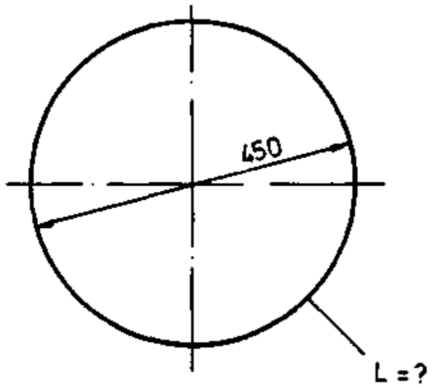

L = ☐ mm

2

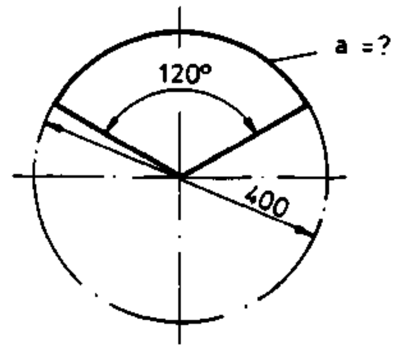

a = ☐ mm

3

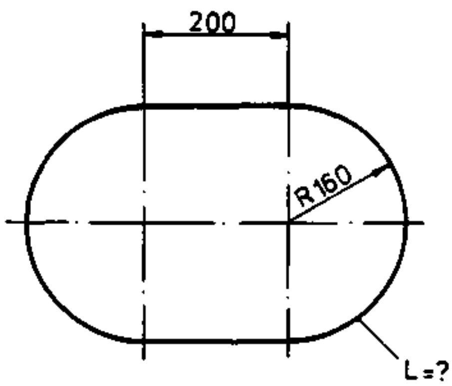

L = ☐ mm

4

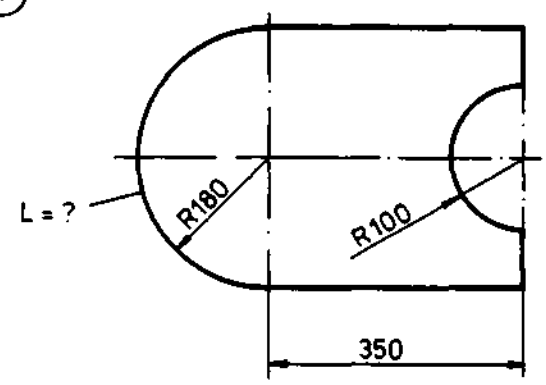

L = ☐ mm

5

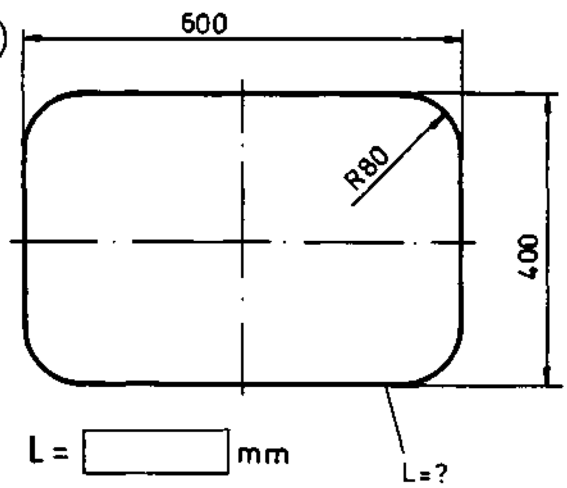

L = ☐ mm

6

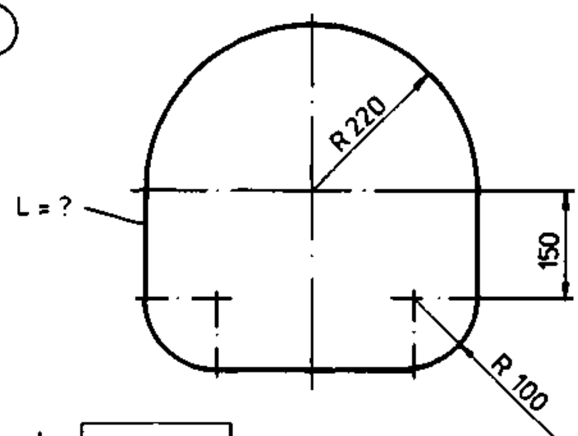

L = ☐ mm

7

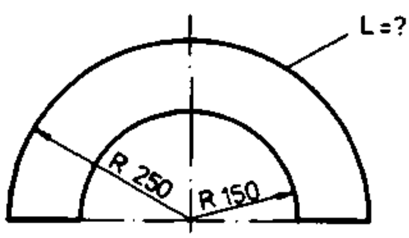

L = ☐ mm

8

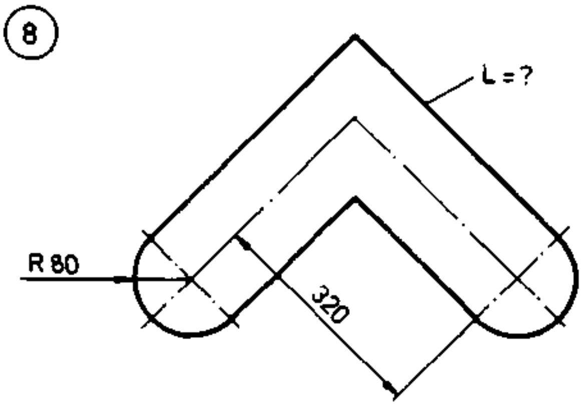

L = ☐ mm

10.1

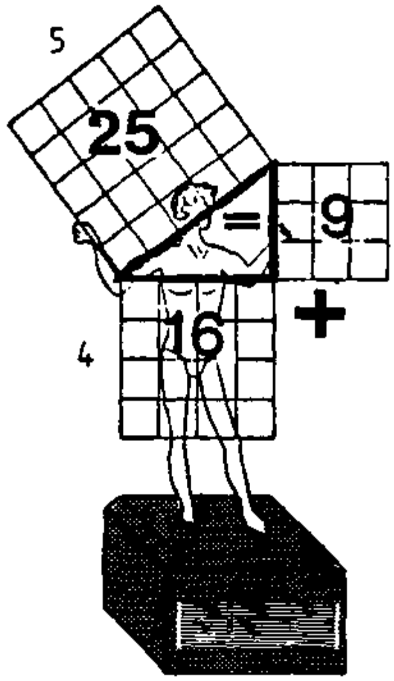

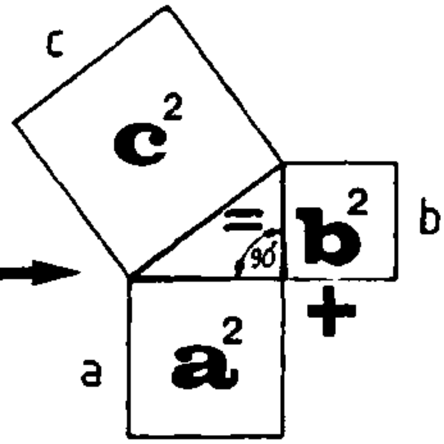

$$c^2 = \quad + $$

1.

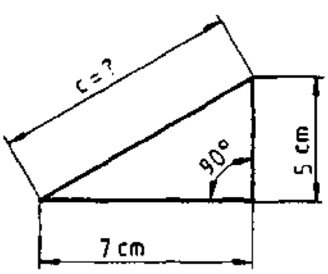

$c^2 = 5^2 + 7^2$

$c = \sqrt{5^2 + 7^2}$

$c = \sqrt{25 + 49}$

$c = \sqrt{74}$

$\underline{\underline{c = 8,6 \text{ cm}}}$

2.

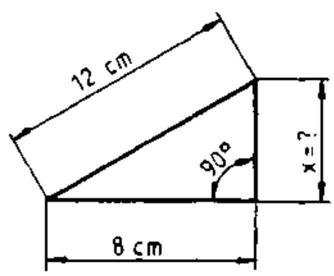

$12^2 = 8^2 + x^2$

$x^2 = 12^2 - 8^2$

$x = \sqrt{12^2 - 8^2}$

$x = \sqrt{144 - 64}$

$x = \sqrt{80}$

$\underline{\underline{x = 8,9 \text{ cm}}}$

Test:

a)

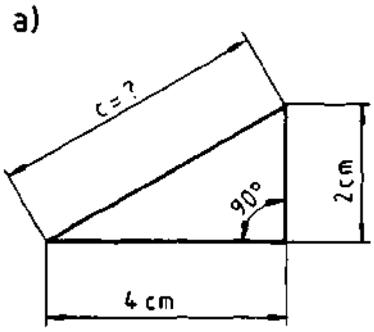

b)

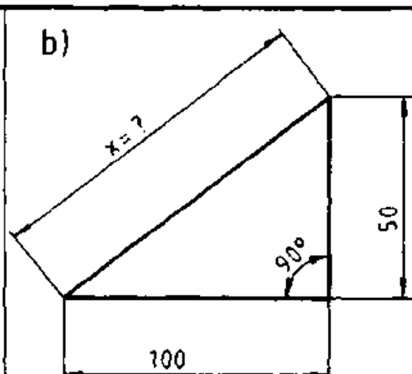

c)

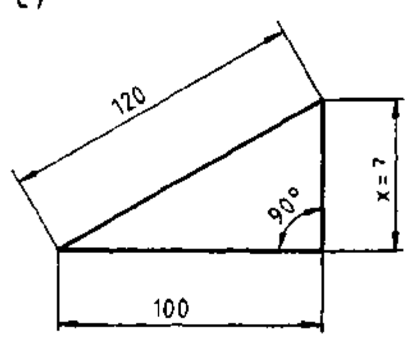

c = cm	x = mm	x= mm

c) x = 66,3 mm   b) x = 111,8 mm   a) c = 4,47cm

(1)

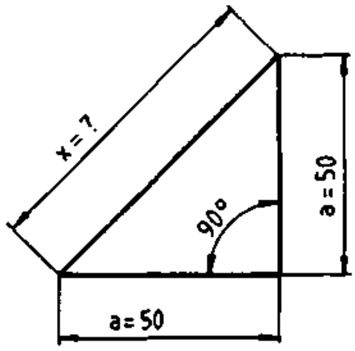

x = [ ] mm

(2)

a = 40 mm

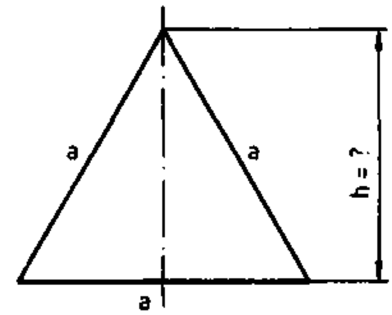

h = [ ] mm

(3)

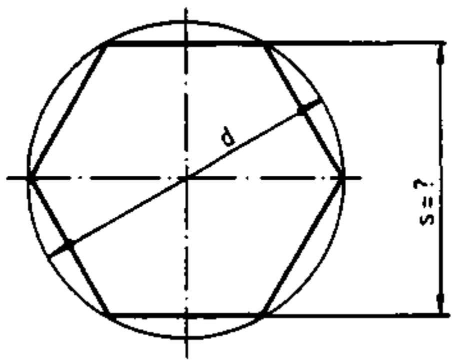

d = 60 mm

s = [ ] mm

(4)

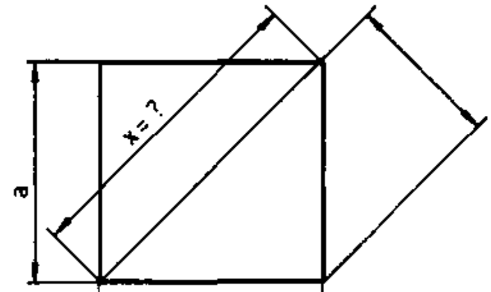

a = 20 mm

x = [ ] mm; y = [ ] mm

(5)

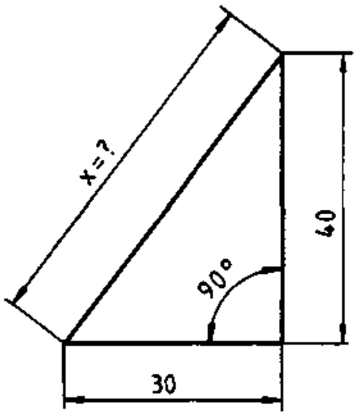

x = [ ] mm

(6)

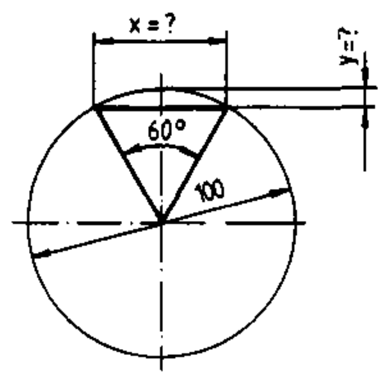

x = [ ] mm; y = [ ] mm

(7)

d = 120 mm

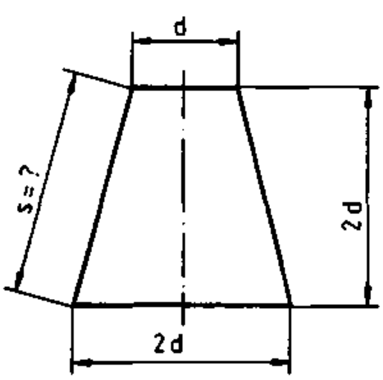

s = [ ] mm

(8)

d = 60 mm

$a = \frac{1}{10} d$

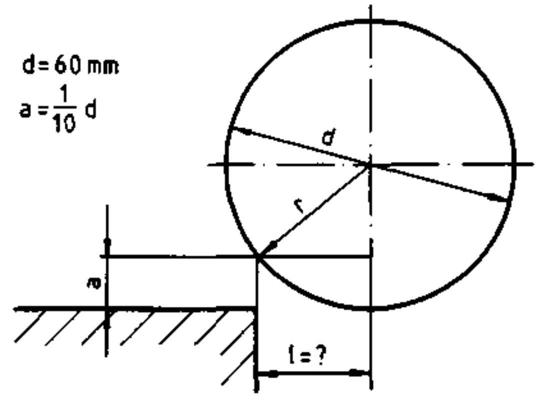

l = [ ] mm

(9)

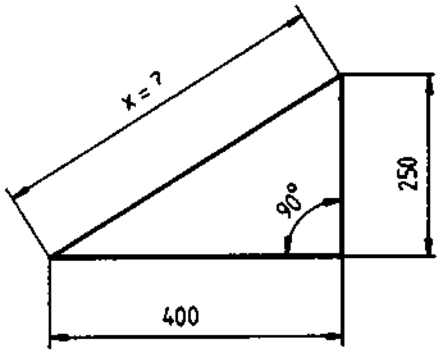

x = ______ mm

(10)

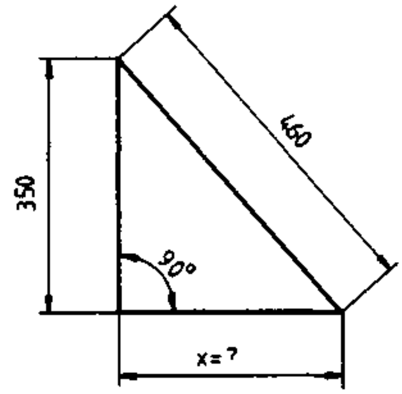

x = ______ mm

(11)

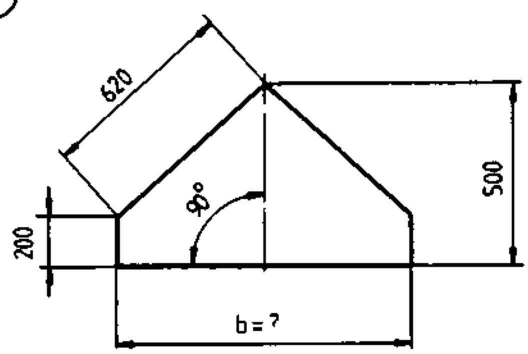

b = ______ mm

(12)

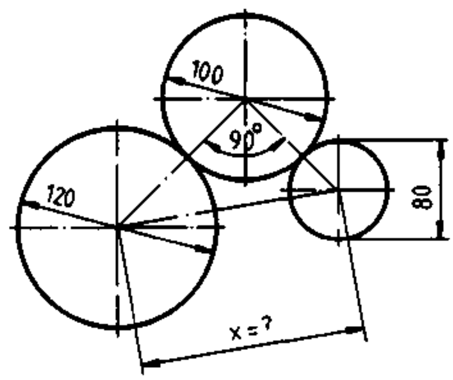

x = ______ mm

(13)

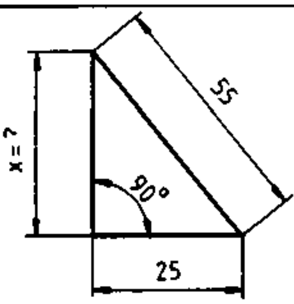

x = ______ mm

(14)

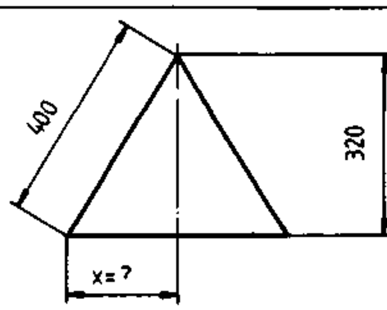

x = ______ mm

(15)

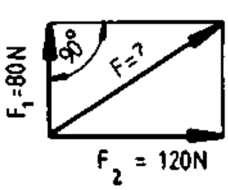

F = ______ N

(16)

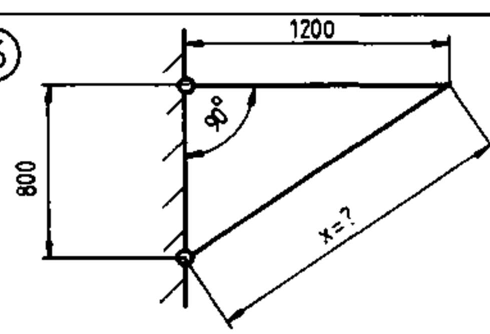

x = ______ mm

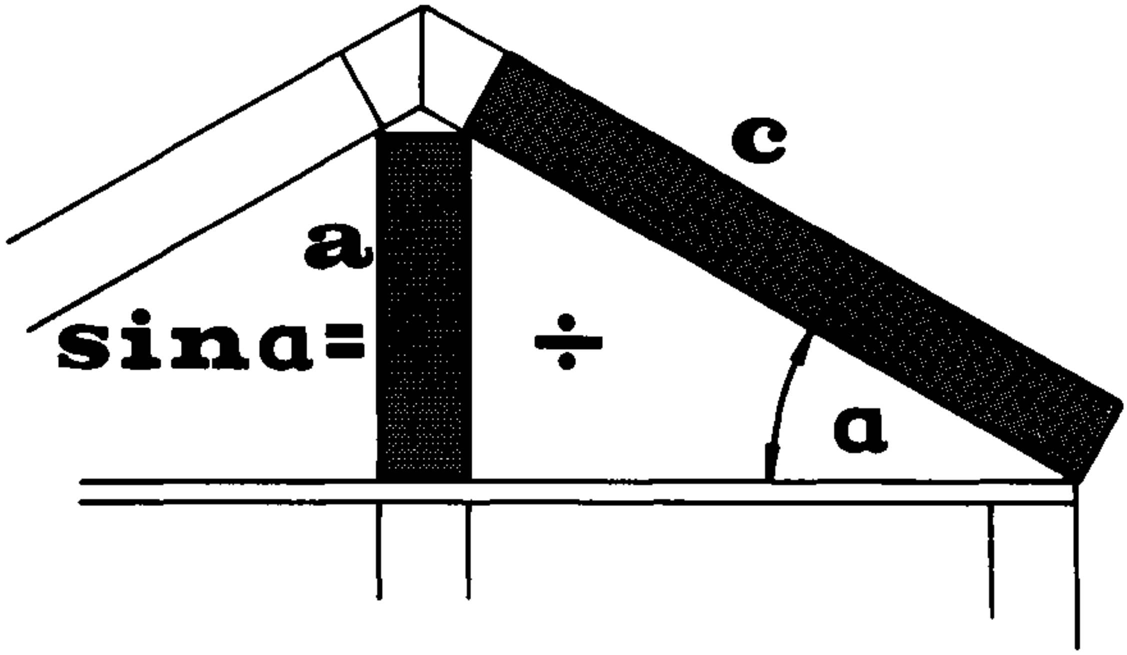

$$\sin\alpha = \frac{\quad}{\quad}$$

1.

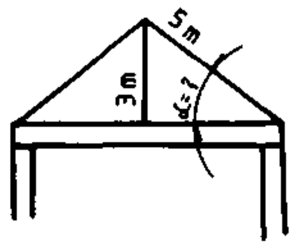

$\sin\alpha = \frac{3m}{5m}$

$\sin\alpha = 0{,}6$

$\underline{\underline{\alpha = 36{,}87^\circ}}$

2.

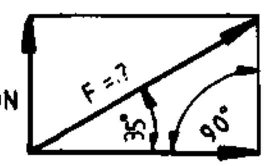

$\sin 35^\circ = \frac{50N}{F}$

$F = \frac{50N}{\sin 35^\circ}$

$\underline{\underline{F = 87{,}2N}}$

Test:

a)	b)	c)
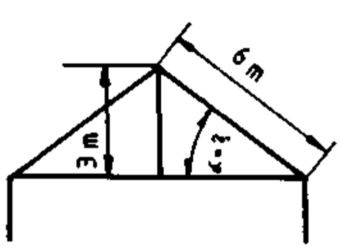	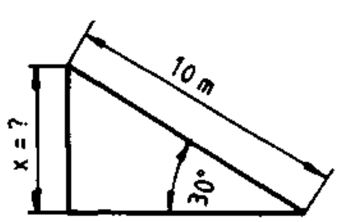	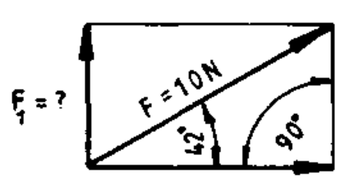
$\alpha =$ ☐ °	$x =$ ☐ m	$F_1 =$ ☐ N

a) $\alpha = 30^\circ$ b) $x = 5m$ c) $F_1 = 6{,}7N$

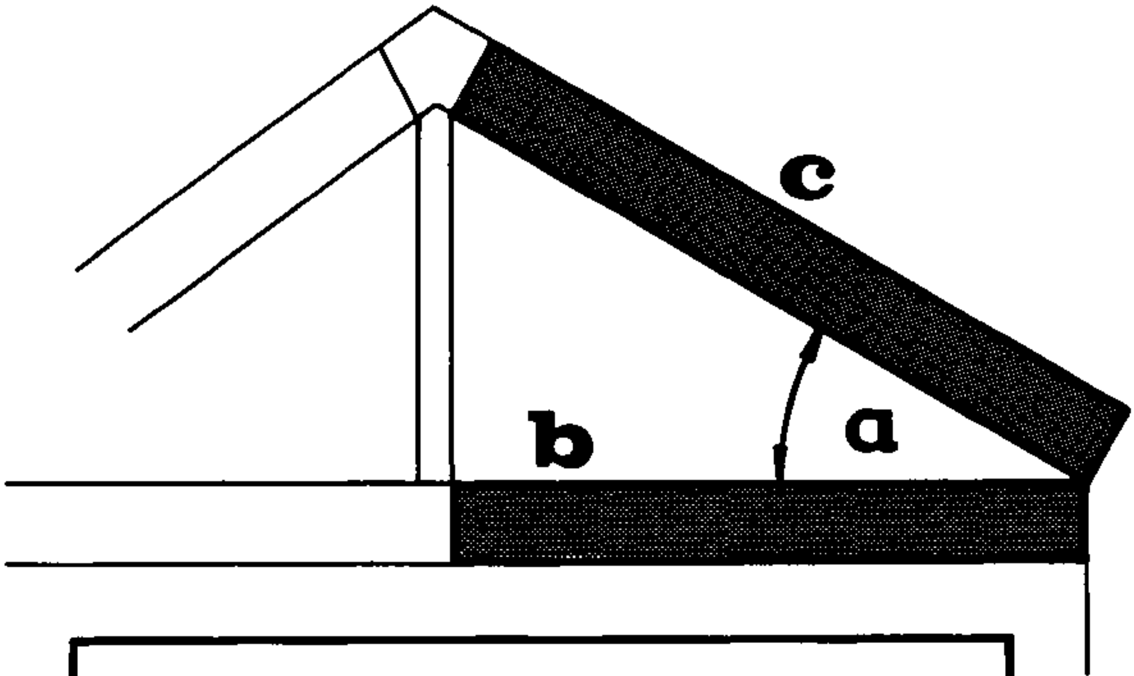

$\cos a = \_\_\_\_\_$

1. $\cos a = \_\_\_\_$ 2.

Test:

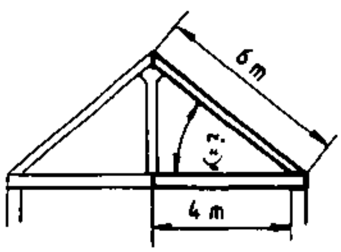

$\cos\alpha = \frac{4m}{6m}$

$\cos\alpha = 0,6667$

$\alpha = 48,2°$

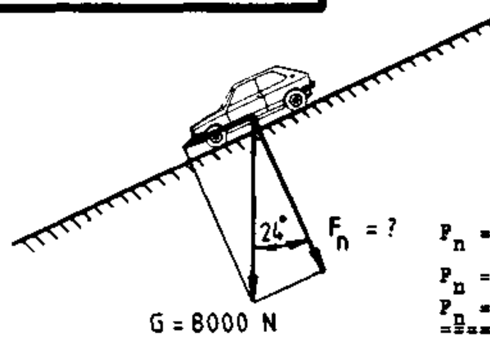

$F_n = G \cdot \cos 24°$

$F_n = 8000N \cdot \cos 24°$

$F_n = 7308N$

a)

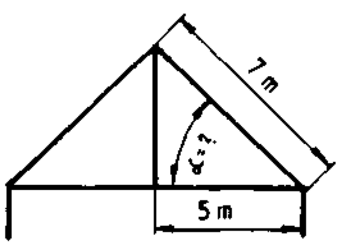

$\alpha =$ ☐ °

b)

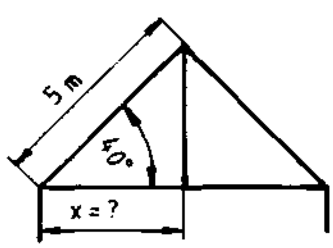

$x =$ ☐ m

c)

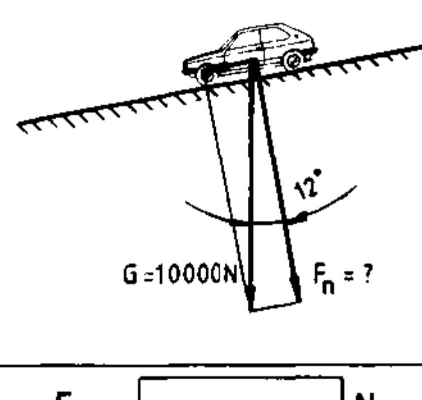

$F_n =$ ☐ N

a) $\alpha = 44,4°$ b) $x = 3,83m$ c) $F_n = 9781$ N

①

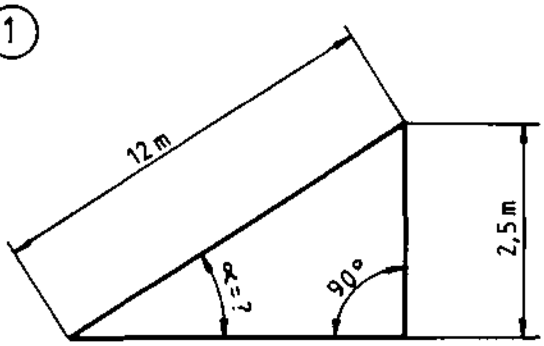

α = ☐ °

②

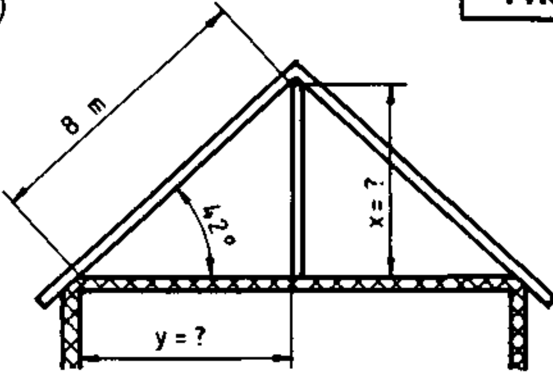

x = ☐ m ; y = ☐ m

③

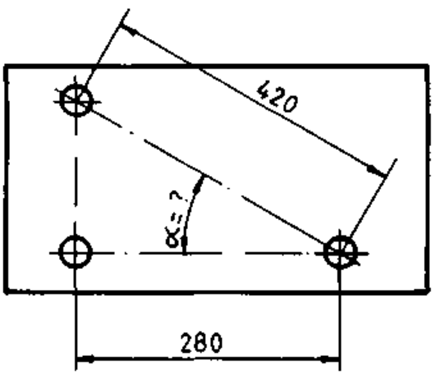

α = ☐ °

④

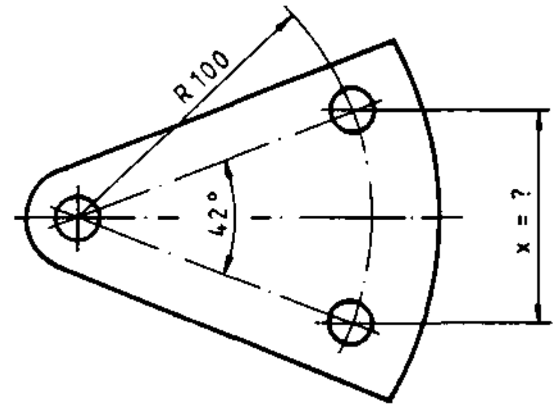

x = ☐ mm

⑤

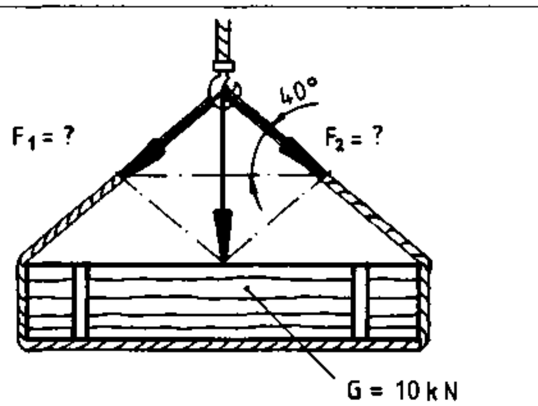

F_1 = ☐ kN ; F_2 = ☐ kN

⑥

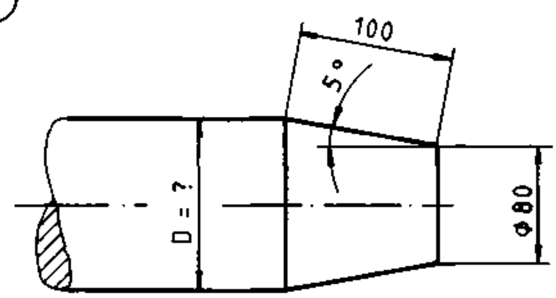

D = ☐ mm

⑦

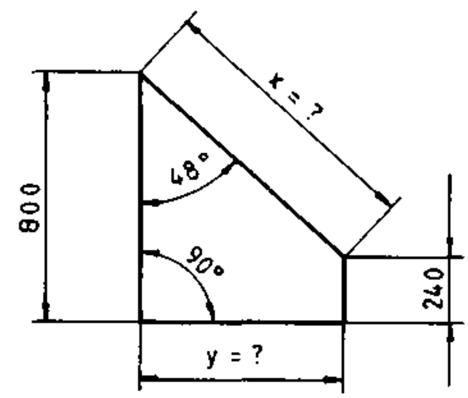

x = ☐ mm ; y = ☐ mm

⑧

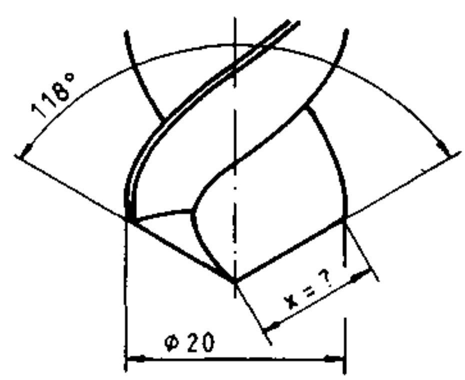

x = ☐ mm

(9)

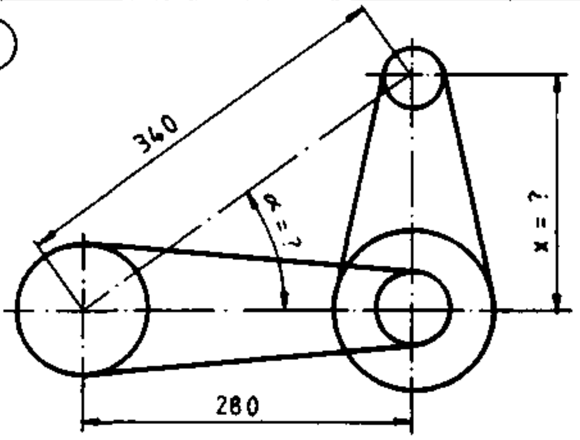

α = [ ] ° ; x = [ ] mm

(10)

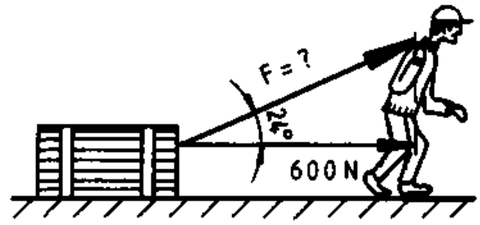

F = [ ] N

(11)

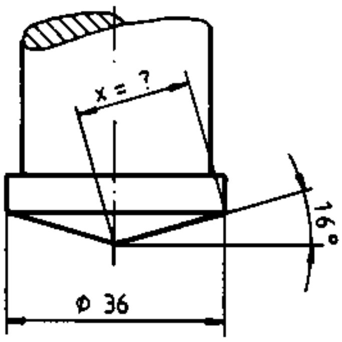

x = [ ] mm

(12)

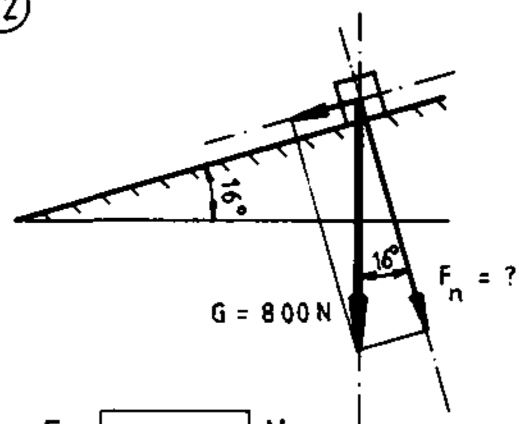

F_N = [ ] N

(13)

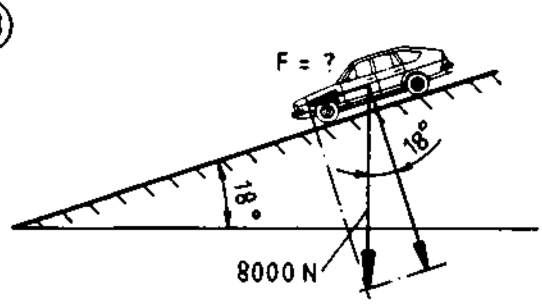

F = [ ] N

(14)

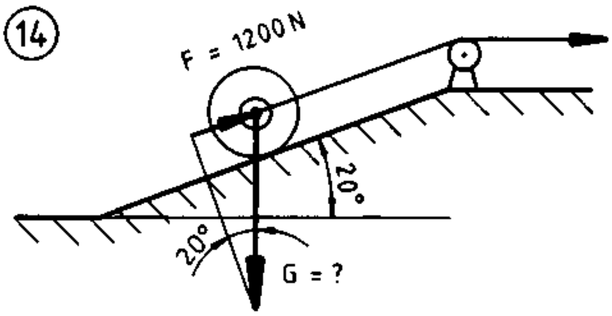

G = [ ] N

(15)

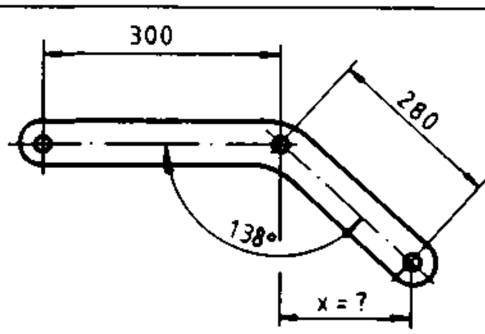

x = [ ] mm

(16)

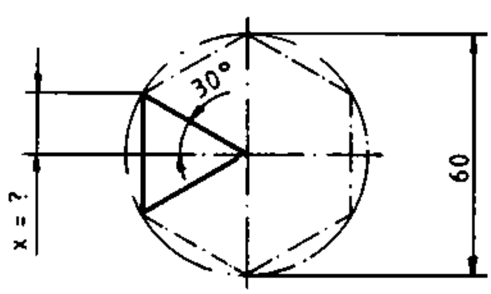

x = [ ] mm

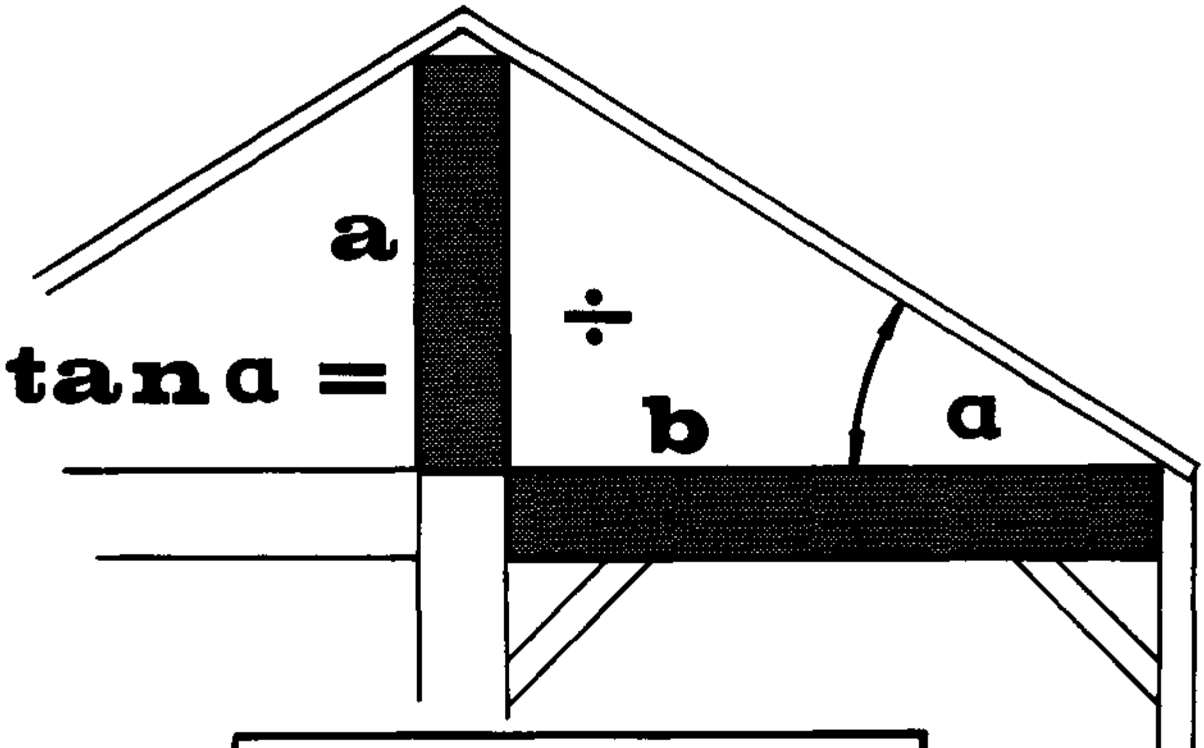

$$\tan\alpha = \frac{\quad}{\quad}$$

1.

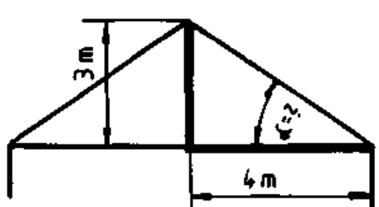

$\tan\alpha = \frac{3\,\cancel{m}}{4\,\cancel{m}}$

$\tan\alpha = 0,75$

$\underline{\underline{\alpha = 36,87^\circ}}$

2.

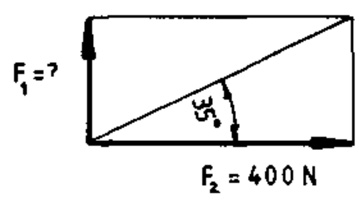

$\tan 35^\circ = \frac{F_1}{F_2}$

$F_1 = F_2 \cdot \tan 35^\circ$

$F_1 = 400N \cdot \tan 35^\circ$

$\underline{\underline{F_1 = 280N}}$

Test:

a)

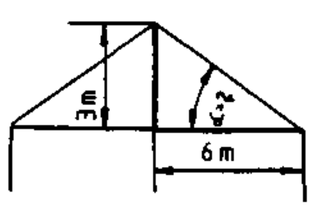

b)

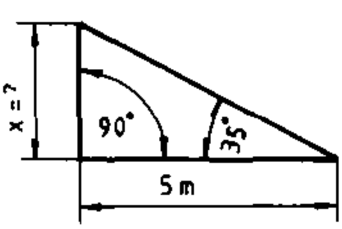

c)

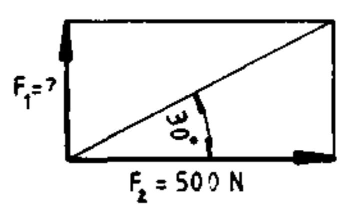

α = ☐ °	X = ☐ m	F_1 = ☐ N

a) α = 26,6°　b) x = 3,5m　c) F_1 = 289N

(1)

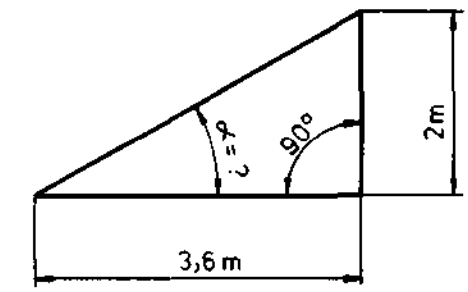

α = ____ °

(2)

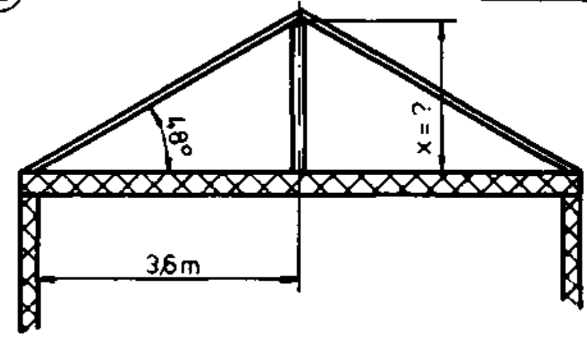

x = ____ m

(3)

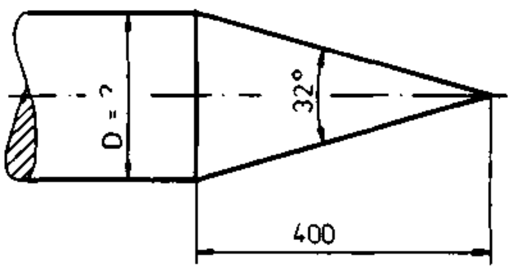

D = ____ mm

(4)

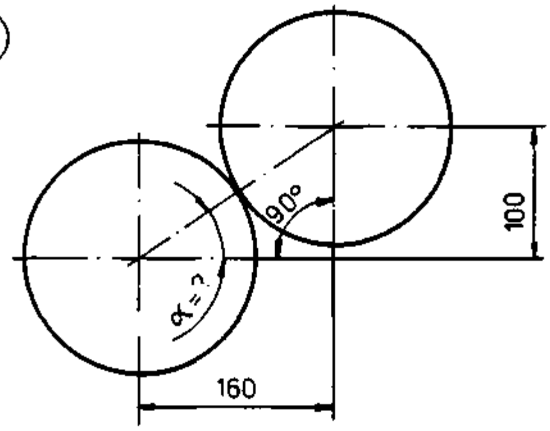

α = ____ °

(5)

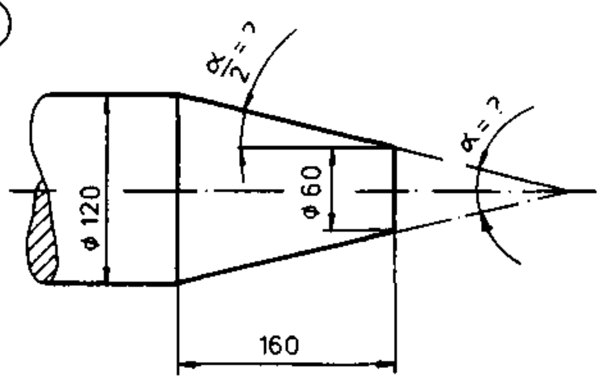

$\frac{\alpha}{2}$ = ____ ° α = ____ °

(6)

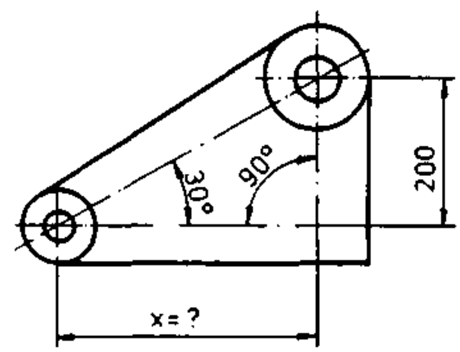

x = ____ mm

(7)

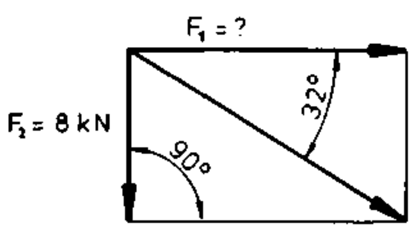

F_1 = ____ kN

(8)

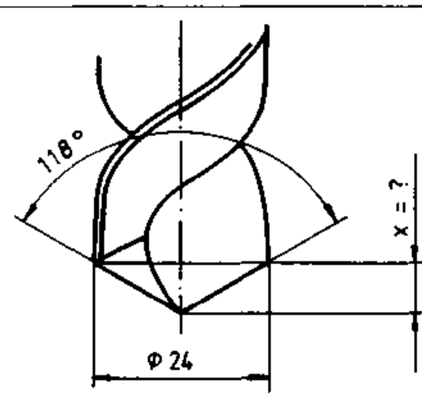

x = ____ mm

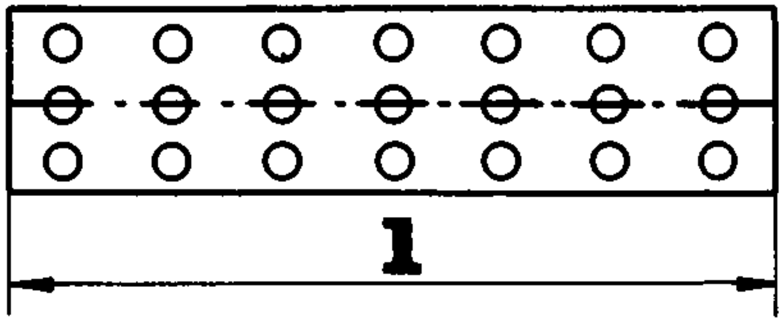

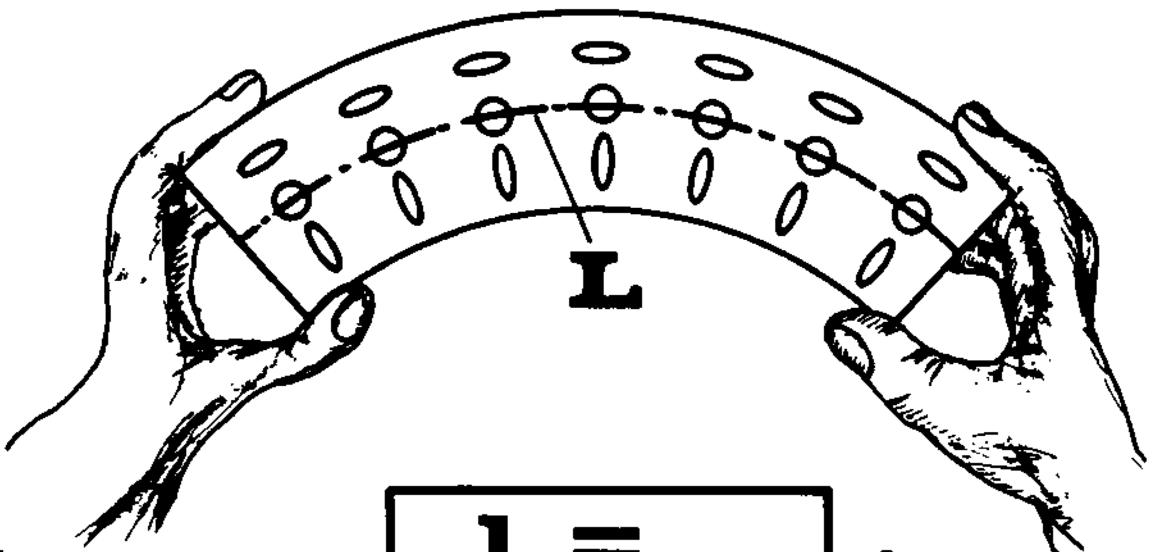

l =

1.

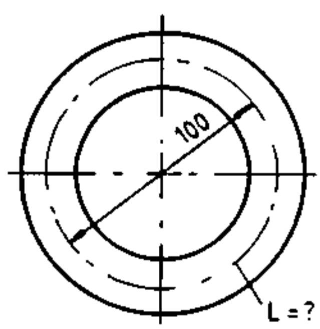

$L = d \cdot \pi$

$L = 100mm \cdot 3,14$

$\underline{L = 314mm}$

2.

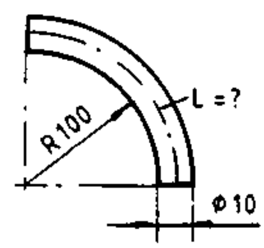

$L = \frac{d \cdot \pi}{4}$

$L = \frac{210mm \cdot 3,14}{4}$

$\underline{L = 164,85mm}$

Test:

a)

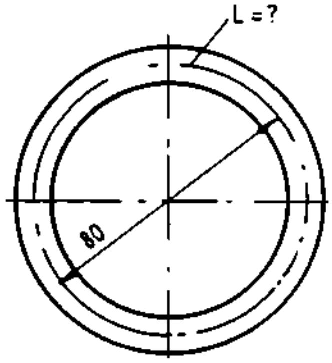

L = ______ mm

b) L = ?

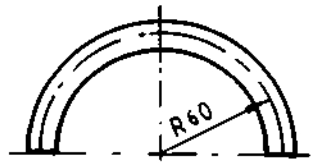

L = ______ mm

c) L = ?

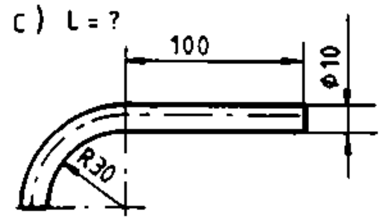

L = ______ mm

a) L = 251,2mm   b) L = 188,4mm   c) L = 154,95mm

1

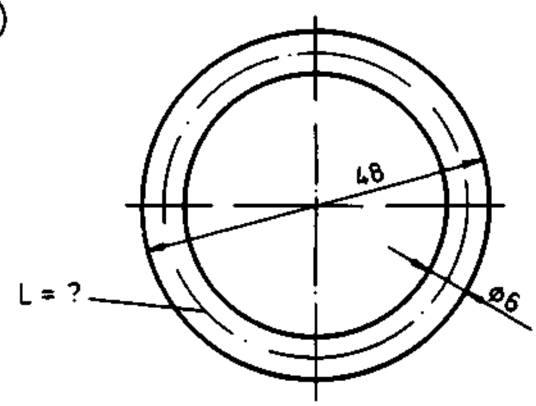

L = ☐ mm

2

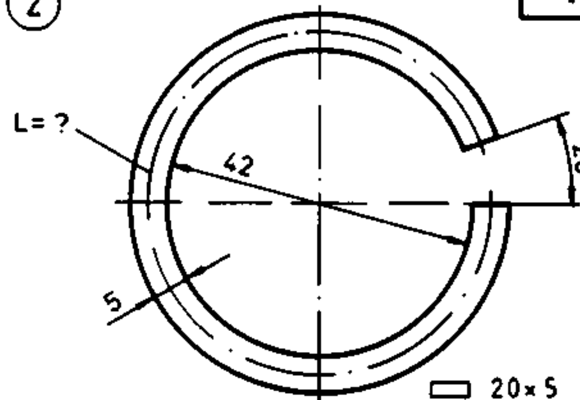

L = ☐ mm

3

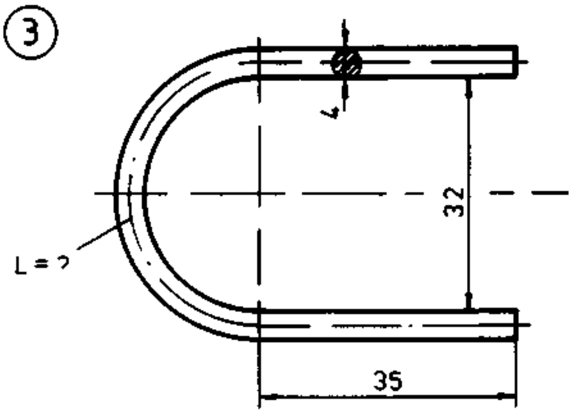

L = ☐ mm

4

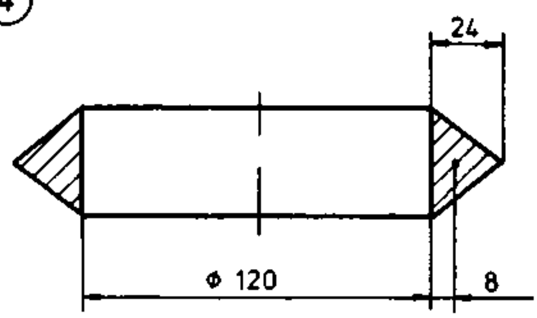

L = ☐ mm

5

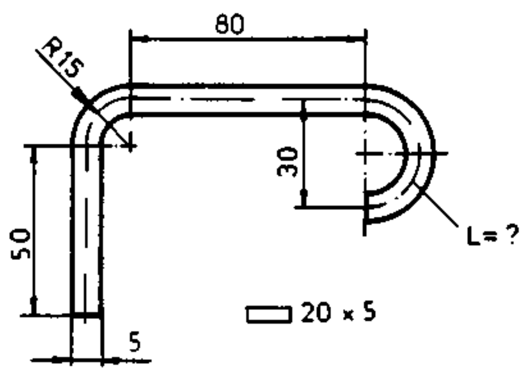

L = ☐ mm

6

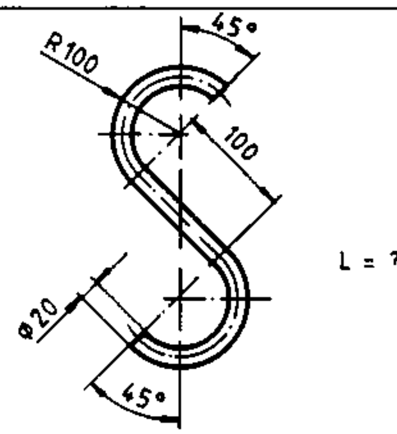

L = ☐ mm

7

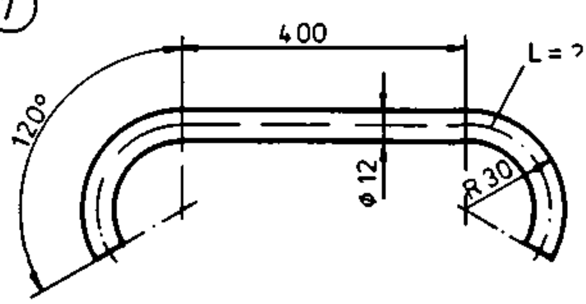

L = ☐ mm

8

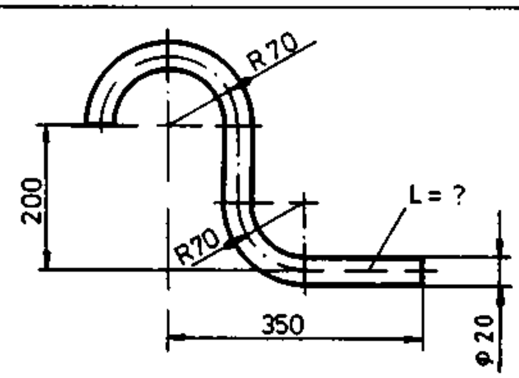

L = ☐ mm

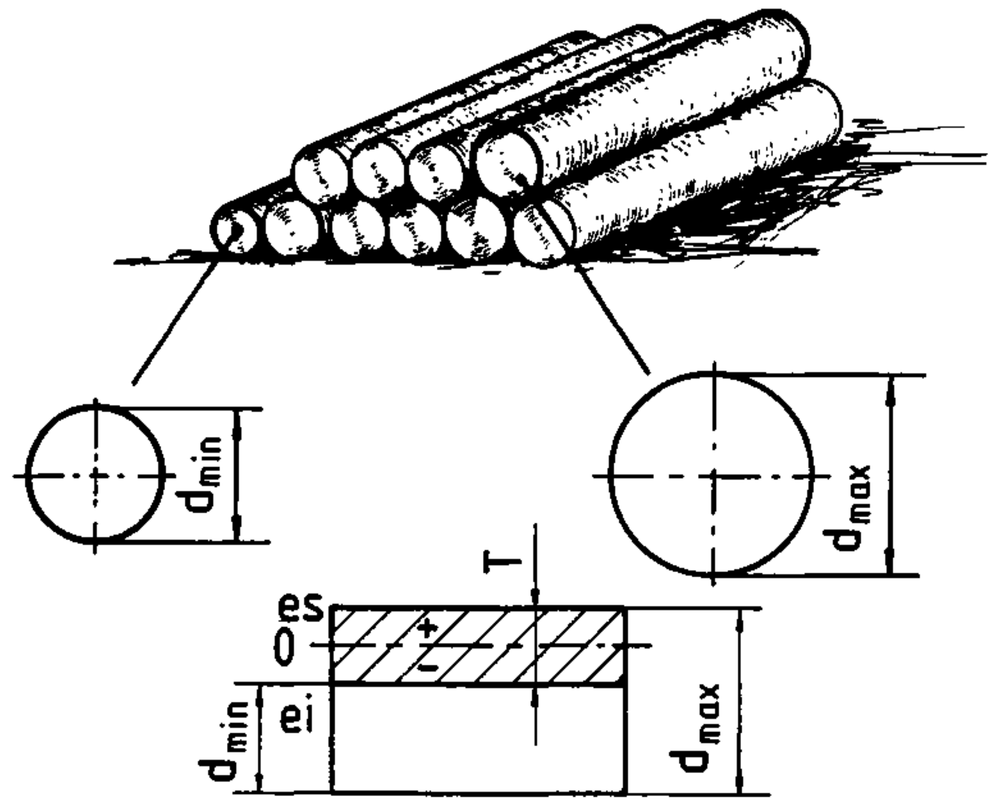

T = e – e

T = d – d

1.

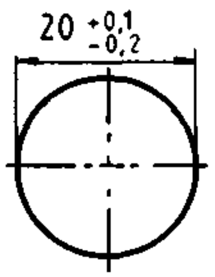

es = ?
ei = ?
T = ?
d_{min} = ?

es = 0,1mm
ei = – 0,2mm
T = es – ei
T = 0,1mm –(– 0,2)mm
T = 0,3mm

Test: d_{min} = 19,8mm

2.

es = ? ei = ? T = ?

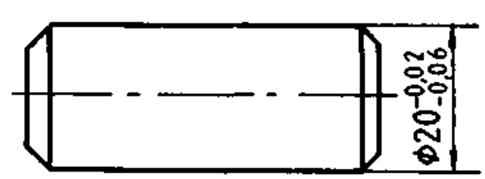

es = – 0,02mm
ei = – 0,06mm
T = es – ei
T = – 0,02mm –(– 0,06)mm
T = 0,04mm

a)

es = ?
ei = ?
T = ?
d_{min} = ?

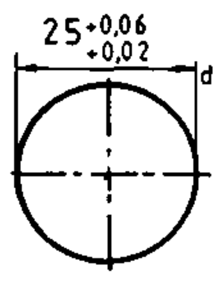

es = mm ; ei = mm

T = mm; d_{min} = mm

b) es = ? ei = ?
T = ? d_{min} = ?

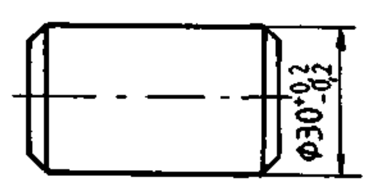

es = mm, ei = mm

T = mm d_{min} = mm

c) T = ?

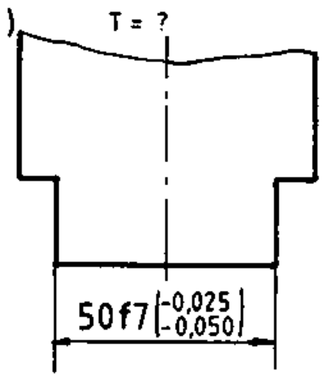

T = mm

a) es = 0,06mm
ei = 0,02mm
T = 0,04mm
d_{min} = 25,02mm

b) es = 0,2mm
ei = – 0,2mm
T = 0,4mm
d_{min} = 29,8mm

c) T = 0,025mm

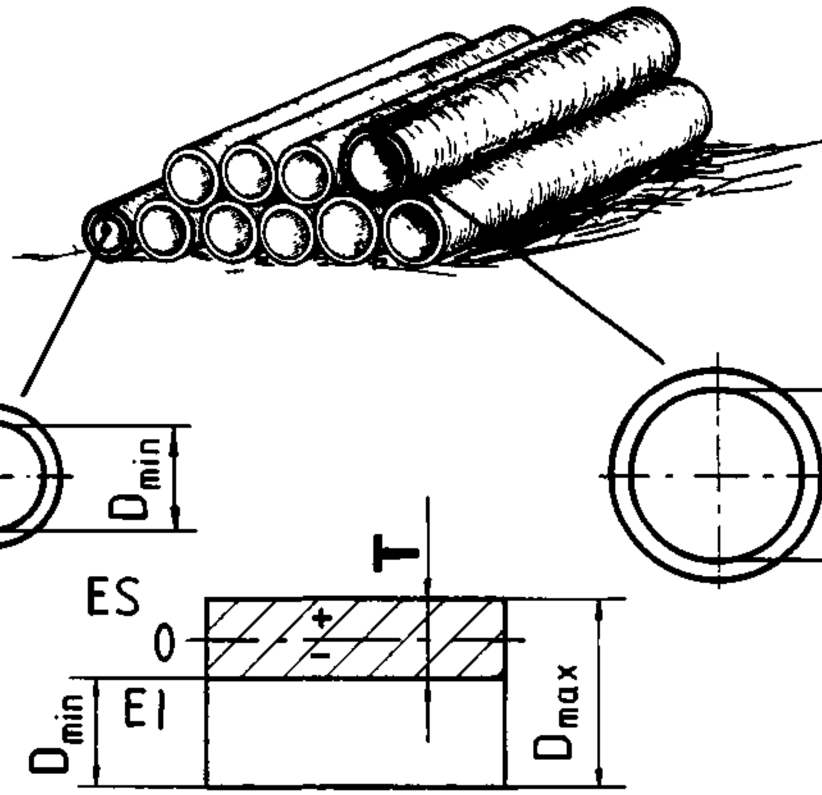

T = E − E   **T = D − D**

1.

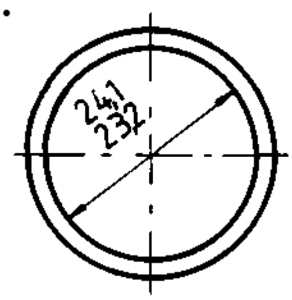

T = ?
D_{min} = ?
D_{max} = ?

Test: D_{max} = 24,1mm
D_{min} = 23,2mm

$T = D_{max} - D_{min}$
T = 24,1mm − 23,2mm
T = 0,9mm

2.

ES = ?
EI = ?
T = ?
L_{max} = ?

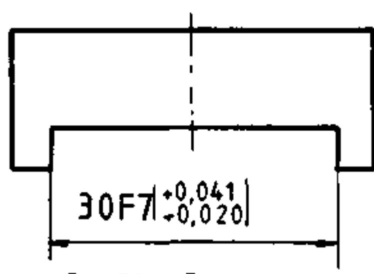

ES = 0,041mm
EI = 0,020mm

T = ES − EI
T = 0,041mm − 0,020mm L_{max} = 30,041mm
T = 0,021mm

a)

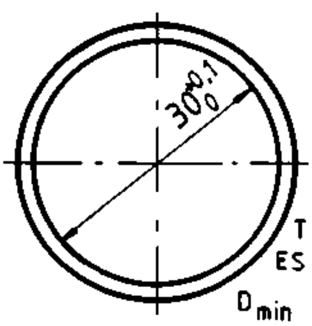

T = ?
ES = ?
D_{min} = ?

b)

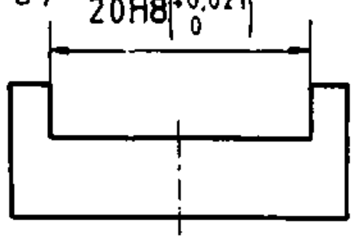

T = ?
L_{max} = ?

c)

T = ?
D_{max} = ?

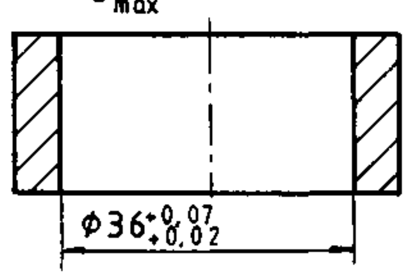

T = [ ] mm, ES = [ ] mm	T = [ ] mm	T = [ ] mm
D_{min} = [ ] mm	L_{max} = [ ] mm	D_{max} = [ ] mm

a) T = 0,1mm, ES = 0,1mm, D_{min} = 30mm   b) T = 0,021mm, L_{max} = 20,021mm   c) T = 0,05mm, D_{max} = 36,07mm

(1)

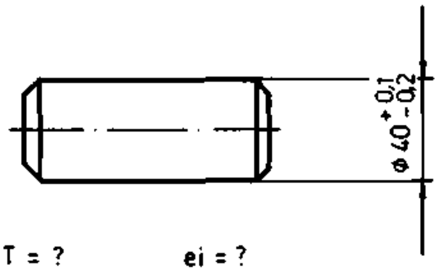

T = ?   ei = ?

T = [ ] mm ; ei = [ ] mm

(2)

D_{max} = ?

D_{min} = ?

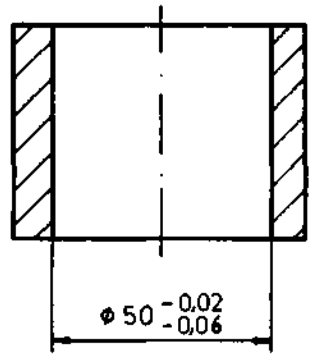

D_{max} = [ ] mm ; D_{min} = [ ] mm

(3)

D_{max} = ?

T = ?

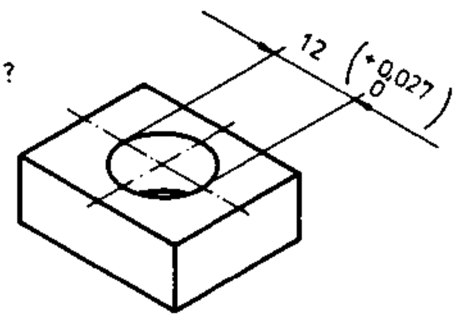

D_{max} = [ ] mm ; T = [ ] mm

(4)

T = ? d_{max} = ?

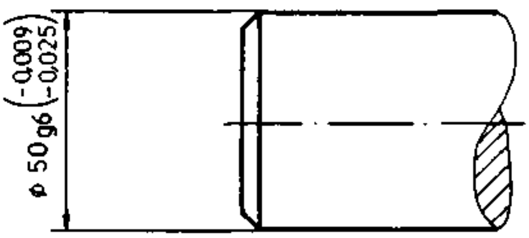

T = [ ] mm ; d_{max} = [ ] mm

(5)

T = ?

d_{min} = ?

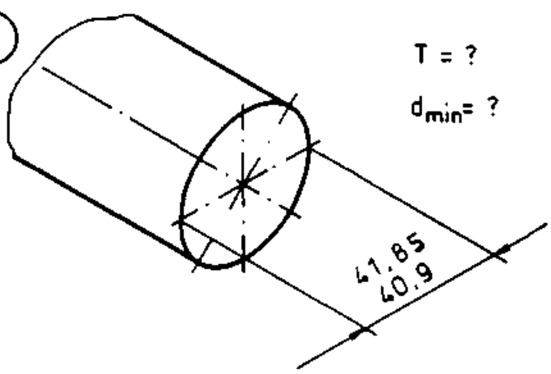

T = [ ] mm ; d_{min} = [ ] mm

(6)

T = ?

D_{min} = ?

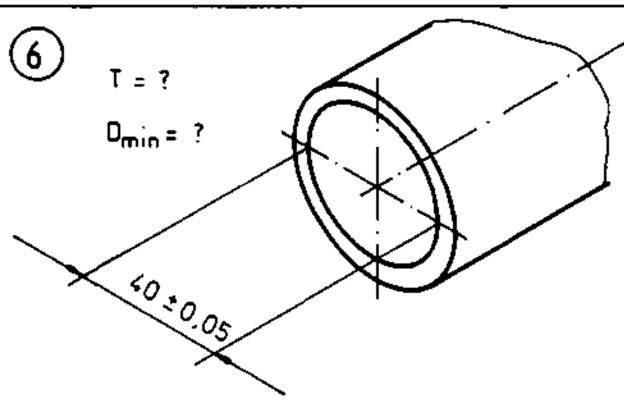

T = [ ] mm ; D_{min} = [ ] mm

(7)

l_{max} = ? ; l_{min} = ?

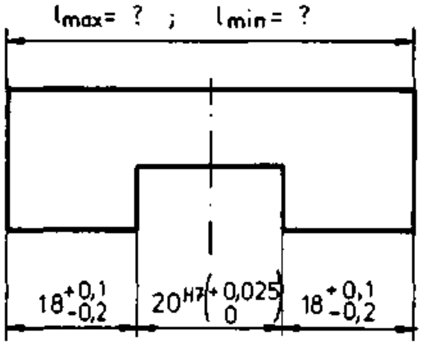

l_{max} = [ ] mm ; l_{min} = [ ] mm

(8)

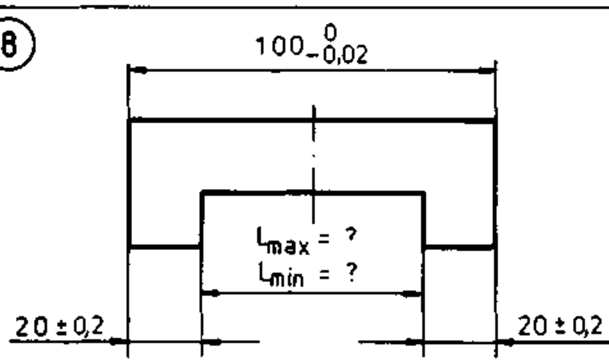

L_{max} = [ ] mm ; L_{min} = [ ] mm

Δt

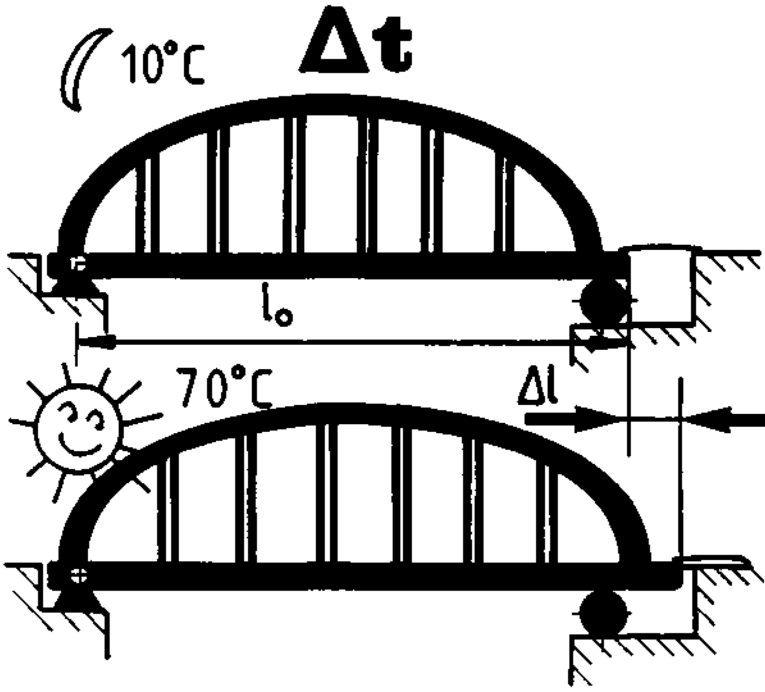

α

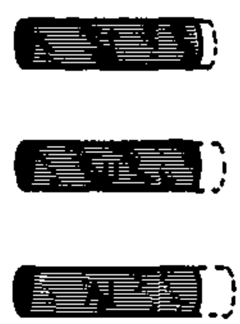

$\square \ \frac{1}{K}$

$\square \ \frac{1}{K}$

$\square \ \frac{1}{K}$

$\Delta t = \square$ K

$$\boxed{\Delta l = \ \cdot \ \cdot \ }$$

1.

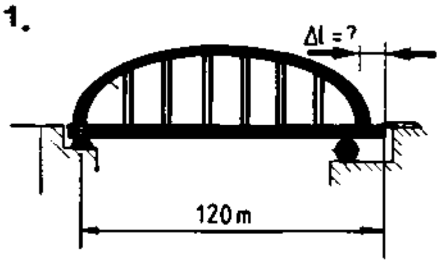

$\alpha = 0{,}000012 \ \frac{1}{K}$

$\Delta t = 70\,K$

$\Delta l = l_0 \cdot \Delta t \cdot \alpha$

$\Delta l = 120m \cdot 70\cancel{K} \cdot 0{,}000012 \ \frac{1}{\cancel{K}}$

$\Delta l = 0{,}1008m = 10{,}08cm$

2.

$\alpha = 0{,}000024 \ \frac{1}{K}$ (Al)

$\Delta t = 50\,K$

$\Delta l = ?$

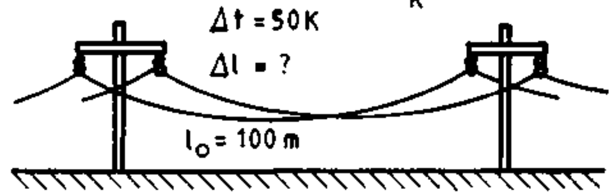

$\Delta l = l_0 \cdot \Delta t \cdot \alpha$

$\Delta l = 100m \cdot 50\cancel{K} \cdot 0{,}000024 \ \frac{1}{\cancel{K}}$

$\Delta l = 0{,}12m = 12cm$

Test:

a)

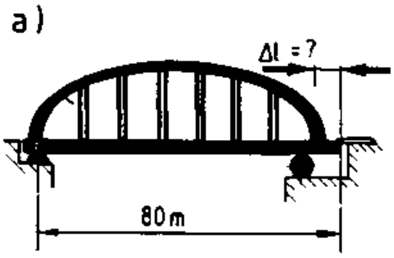

$\alpha = 0{,}000012 \ \frac{1}{K}$

$\Delta t = 50\,K$

$\Delta l = \square$ cm

b)

$\alpha = 0{,}000024 \ \frac{1}{K}$

$t_1 = -10°C$

$t_2 = +60°C$

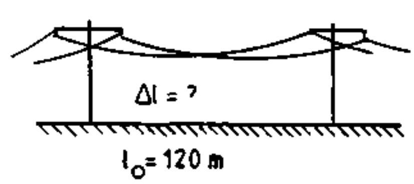

$\Delta l = \square$ cm

c)

$\Delta t = 80\,K$

$\alpha = 0{,}000017 \ \frac{1}{K}$ (Cu)

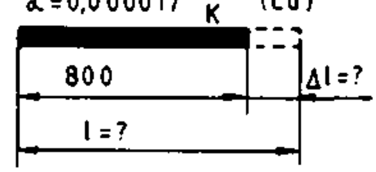

$\Delta l = \square$ mm

$l = \square$ mm

a) $\Delta l = 0{,}048m = 4{,}8cm$ b) $\Delta l = 20{,}16cm$ c) $\Delta l = 1{,}088mm$ $l = 801{,}088mm$

(1)

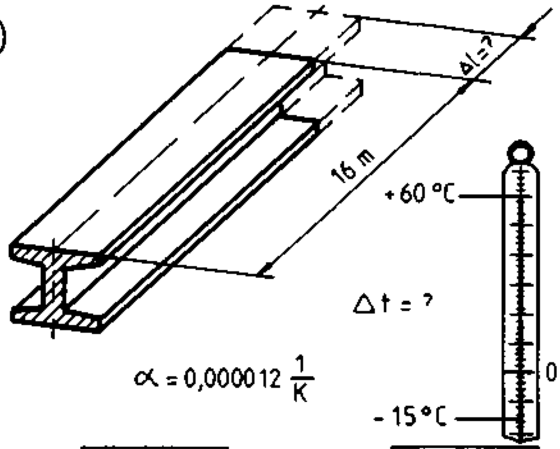

$\Delta t = ?$

$\alpha = 0{,}000012\ \frac{1}{K}$

$\Delta t =$ ______ K ; $\Delta l =$ ______ mm

(2)

$\Delta l = ?$

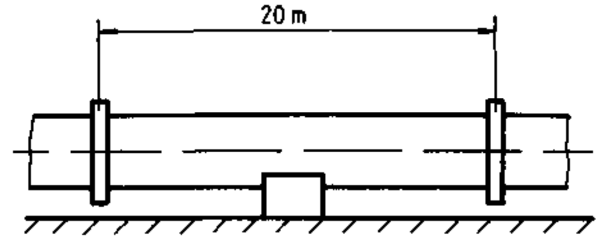

$\alpha = 0{,}000012\ \frac{1}{K}$

$t_1 = -20\,°C$, $t_2 = +50\,°C$, $\Delta t = ?$

$\Delta t =$ ______ K ; $\Delta l =$ ______ mm

(3)

$t_1 = -20\,°C$ $t_2 = +50\,°C$

$\alpha = 0{,}000012\ \frac{1}{K}$ $\Delta t = ?$

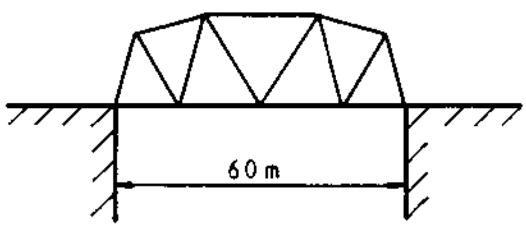

$\Delta l = ?$

$\Delta t =$ ______ K , $\Delta l =$ ______ mm

(4)

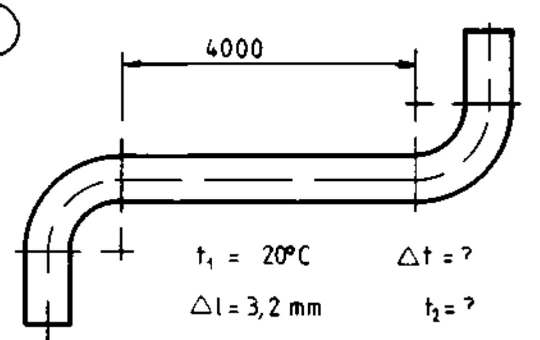

$t_1 = 20\,°C$ $\Delta t = ?$

$\Delta l = 3{,}2$ mm $t_2 = ?$

$\alpha = 0{,}000012\ \frac{1}{K}$

$\Delta t =$ ______ K ; $t_2 =$ ______ °C

(5)

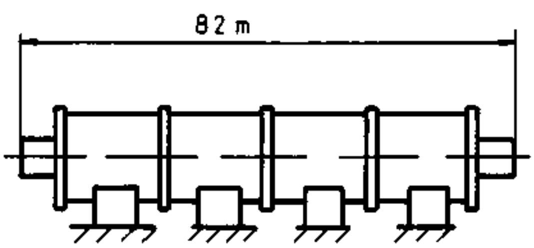

$\Delta t = 200\,K$ $\alpha = 0{,}000012\ \frac{1}{K}$

$\Delta l = ?$

$\Delta l =$ ______ mm

(6)

$t_1 = 20\,°C$ $t_2 = 80\,°C$

$\Delta t = ?$

$\alpha = 0{,}000012\ \frac{1}{K}$

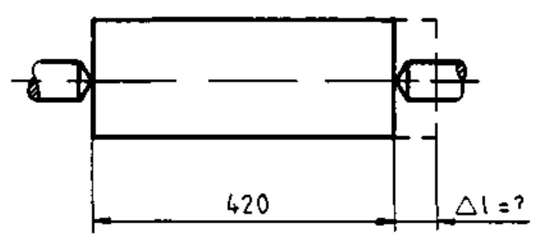

$\Delta t =$ ______ K ; $\Delta l =$ ______ mm

(7)

$t_1 = 180\,°C$, $t_2 = 20\,°C$

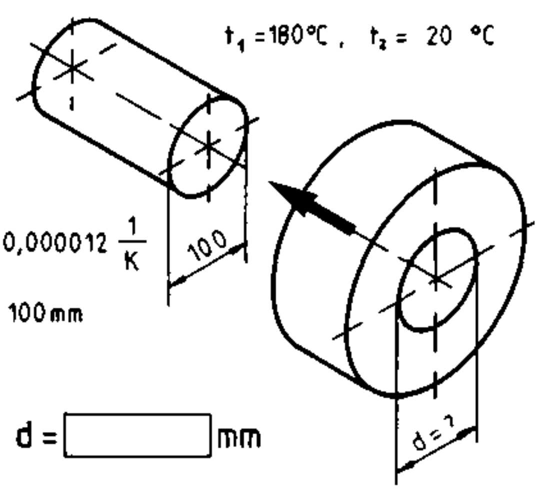

$\alpha = 0{,}000012\ \frac{1}{K}$

$d_0 = 100$ mm

$d =$ ______ mm

(8)

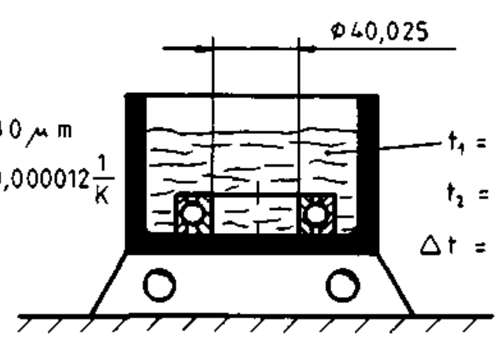

$\Delta l = 80\,\mu m$

$\alpha = 0{,}000012\ \frac{1}{K}$

$t_1 = 20\,°C$

$t_2 = ?$

$\Delta t = ?$

$\Delta t =$ ______ K , $t_2 =$ ______ °C

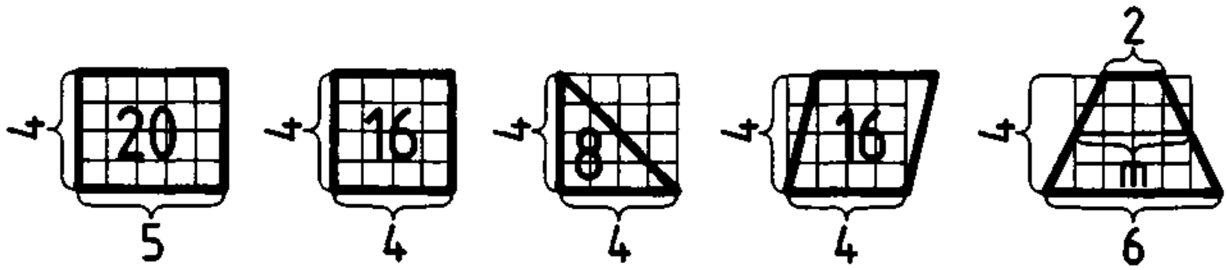

A = ·	A =	A = $\frac{\cdot}{}$	A = ·	A = ·

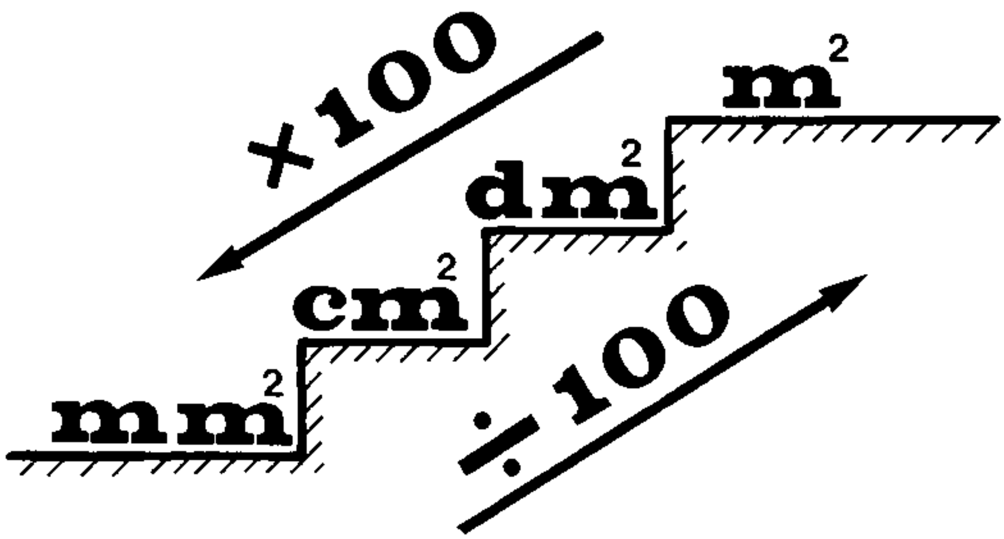

$1\ m^2 =$ ☐ dm^2 = ☐ cm^2 = ☐ mm^2

Test

a)

	m^2	dm^2	cm^2
1.	2		
2.		120	
3.			4000

b)

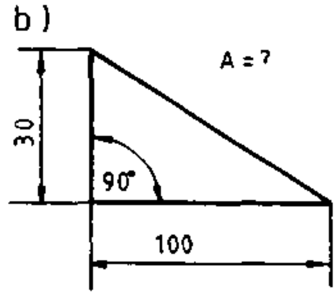

A = ☐ mm^2

A = ☐ cm^2

c)

A = ?

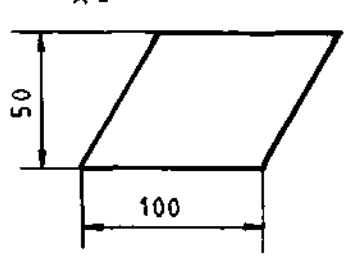

A = ☐ mm^2

A = ☐ cm^2

$1.\ 2m^2 = 200dm^2 = 20000cm^2$
$2.\ 120dm^2 = 1,2m^2 = 12000cm^2$
$3.\ 4000cm^2 = 0,4m^2 = 40dm^2$

b) $A = 1500mm^2 = 15cm^2$

c) $A = 5000mm^2 = 50cm^2$

16.2

(1)

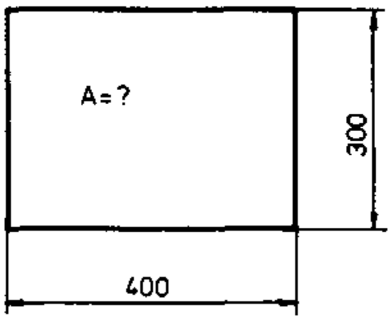

A = ☐ cm^2

(2)

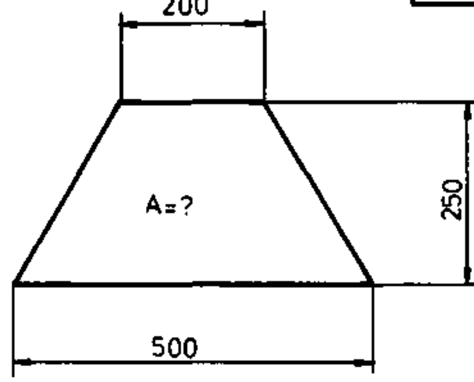

A = ☐ cm^2

(3)

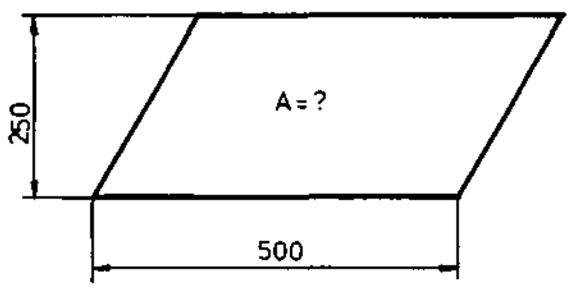

A = ☐ m^2

(4)

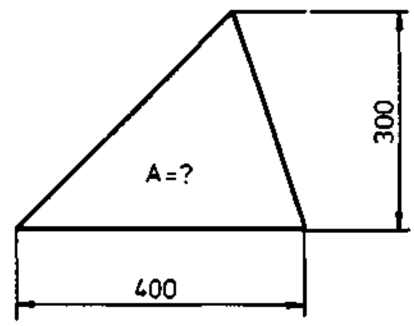

A = ☐ dm^2

(5)

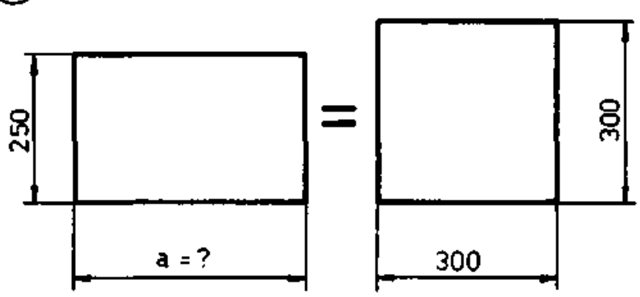

a = ☐ mm

(6)

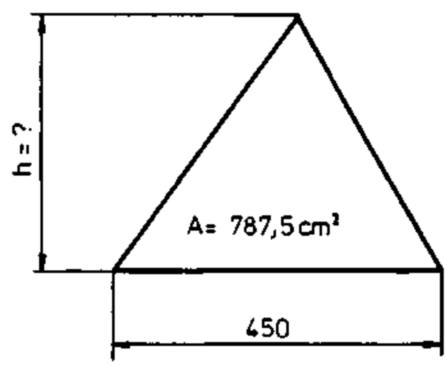

h = ☐ mm

(7)

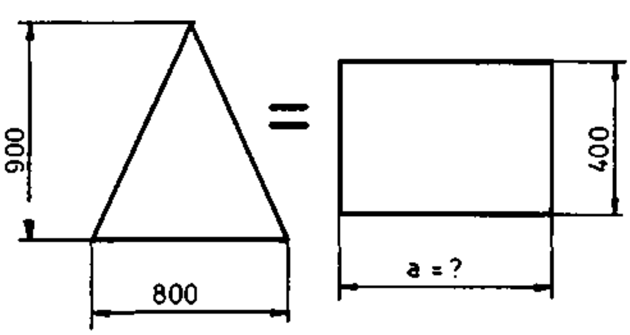

a = ☐ mm

(8)

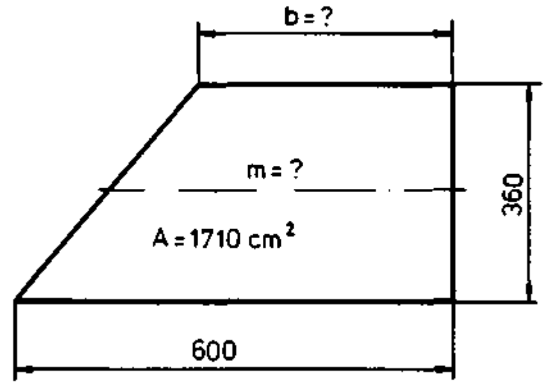

m = ☐ mm b = ☐ mm

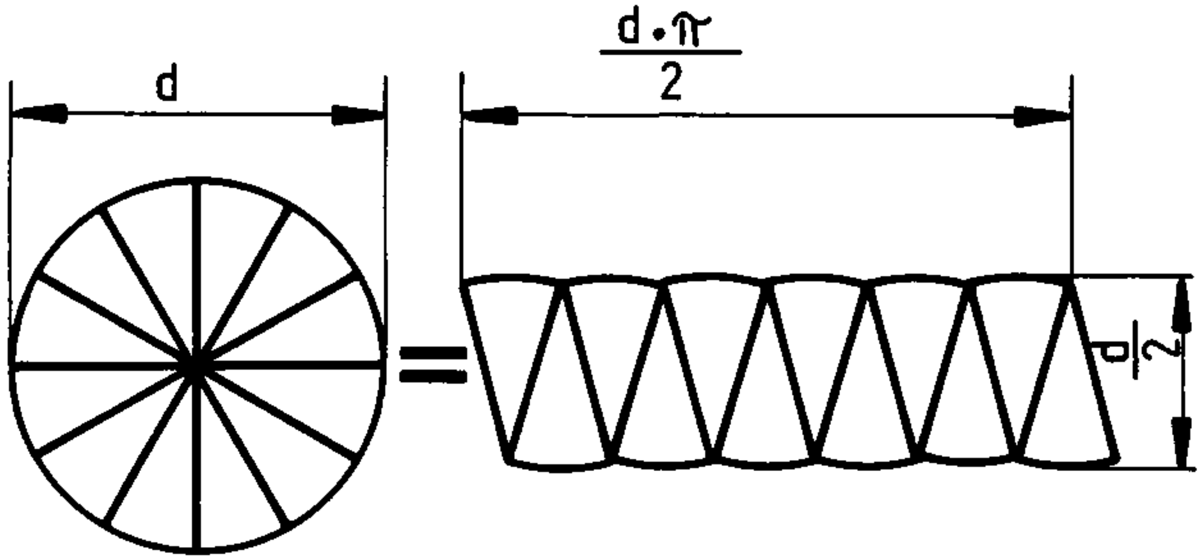

$$A = \underline{\qquad\qquad}$$

1.

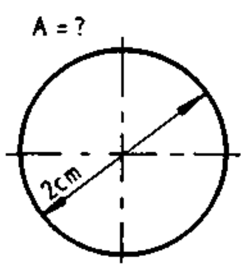

$A = \frac{d^2 \cdot \pi}{4}$

$A = \frac{2^2 cm^2 \cdot 3,14}{4}$

$A = 3,14 cm^2$

2.

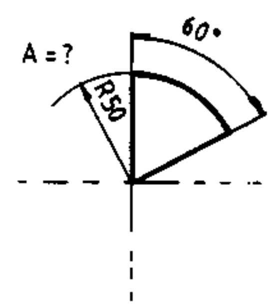

$A = \frac{d^2 \cdot \pi}{4 \cdot 6}$

$A = \frac{100^2\ mm^2 \cdot 3,14}{4 \cdot 6}$

$A = 1308 mm^2$

Test:

a)

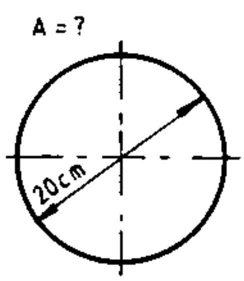

b)

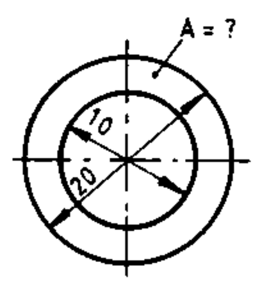

c)

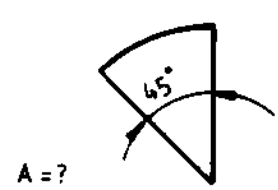

d = 40mm

A = [ ] cm^2	A = [ ] cm^2	A = [ ] cm^2

c) $A = 1,57 cm^2$ b) $A = 2,355 cm^2$ a) $A = 314 cm^2$

(1)

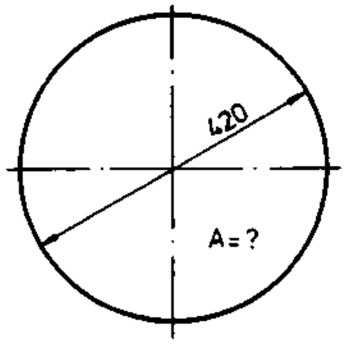

$A =$ ☐ mm^2

(2)

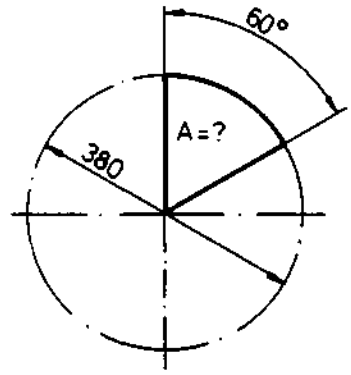

$A =$ ☐ cm^2

(3)

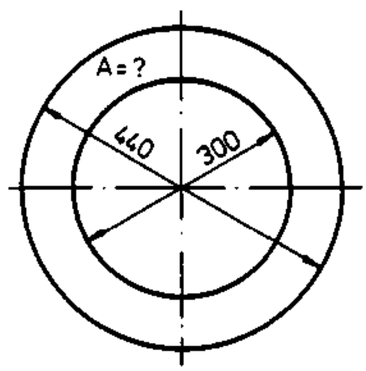

$A =$ ☐ cm^2

(4)

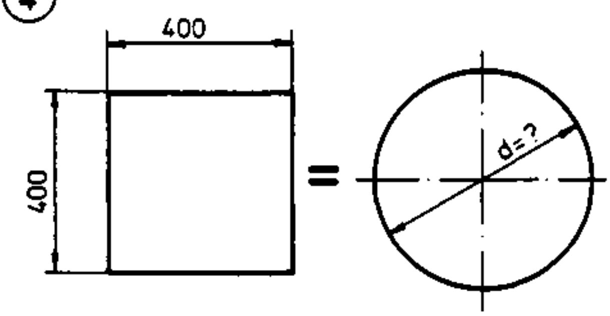

$d =$ ☐ mm

(5)

$A = 803{,}84\ cm^2$

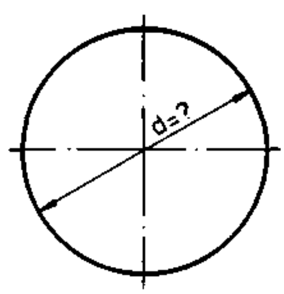

$d =$ ☐ mm

(6)

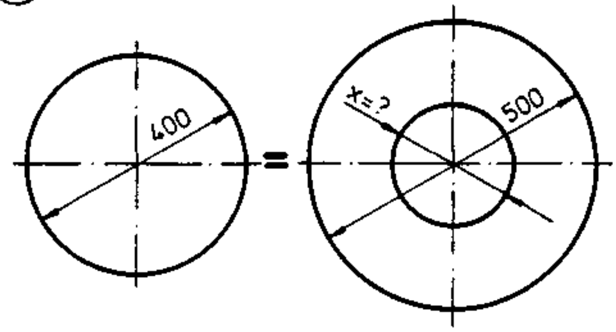

$x =$ ☐ mm

(7)

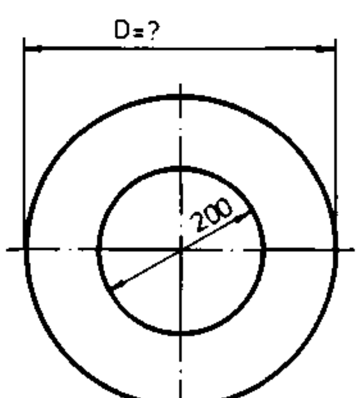

$D =$ ☐ mm $A = 1275{,}63\ cm^2$

(8)

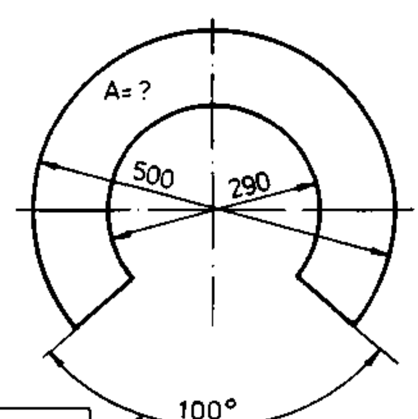

$A =$ ☐ cm^2

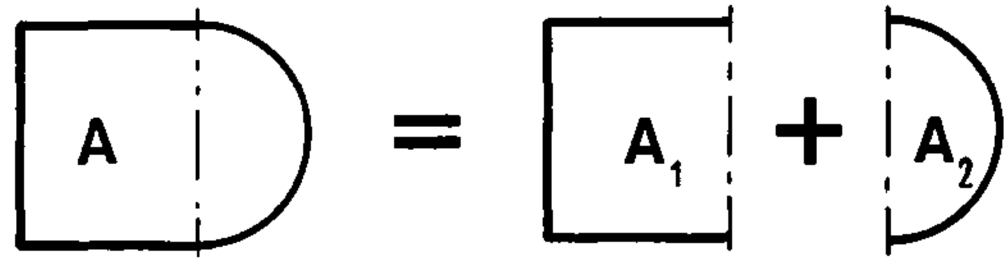

$$A = \quad + $$

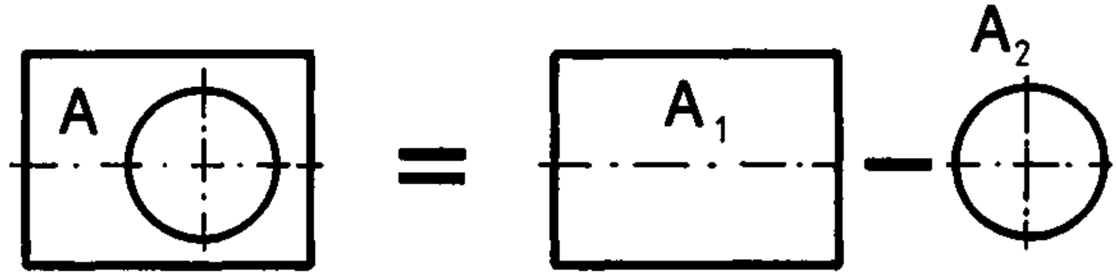

$$A = \quad - $$

1.

$A = ?$

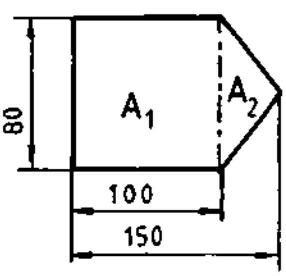

$A = A_1 + A_2$

$A_1 = 8cm \cdot 10cm$ $\quad A_2 = 8cm \cdot 5cm \cdot \frac{1}{2}$

$A_1 = 80cm^2$ $\quad A_2 = 20cm^2$

$A = 80cm^2 + 20cm^2$

$\underline{\underline{A = 100cm^2}}$

Test :

2.

$A = ?$

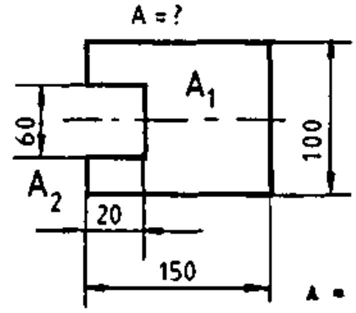

$A = A_1 - A_2$

$A_1 = 15cm \cdot 10cm$

$A_1 = 150cm^2$

$A_2 = 2cm \cdot 6cm$

$A_2 = 12cm^2$

$A = 150cm^2 - 12cm^2$

$\underline{\underline{A = 138cm^2}}$

a)

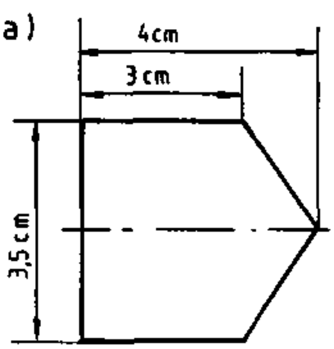

$A = ?$

$A =$ ______ cm^2

b)

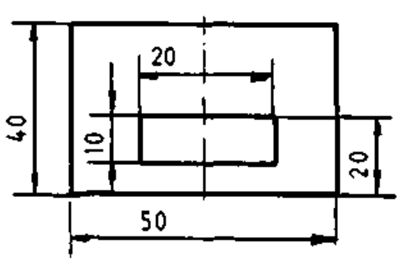

$A = ?$

$A =$ ______ mm^2

c)

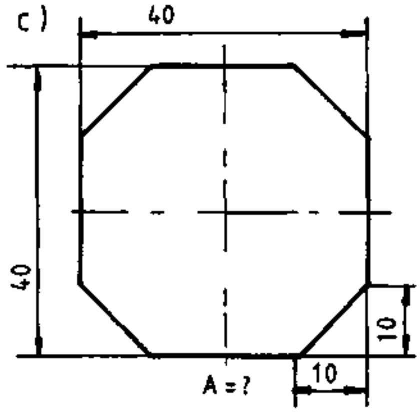

$A = ?$

$A =$ ______ mm^2

①

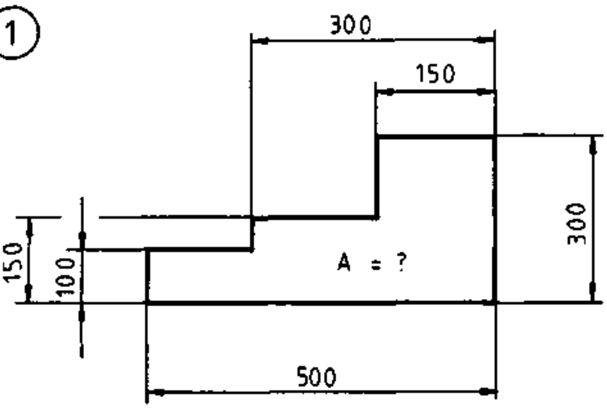

A = ☐ cm²

②

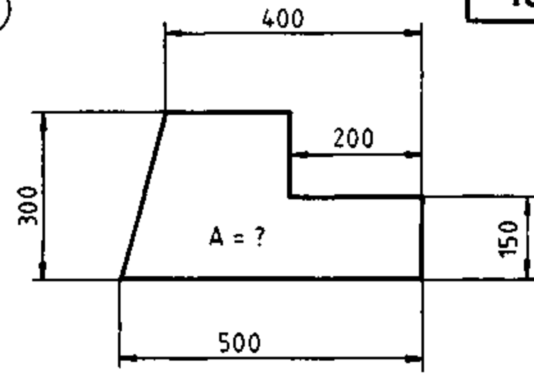

A = ☐ cm²

③

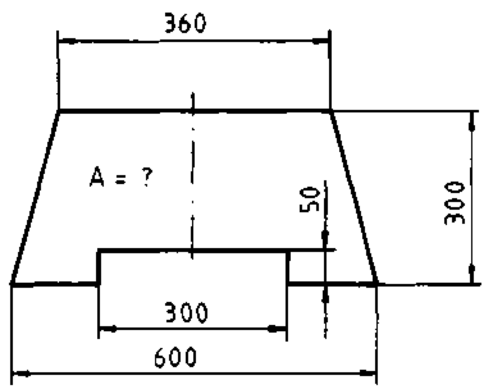

A = ☐ cm²

④

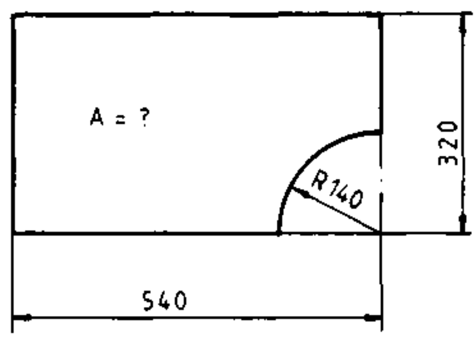

A = ☐ dm²

⑤

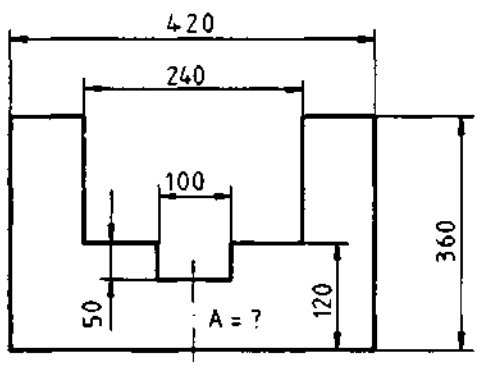

A = ☐ cm²

⑥

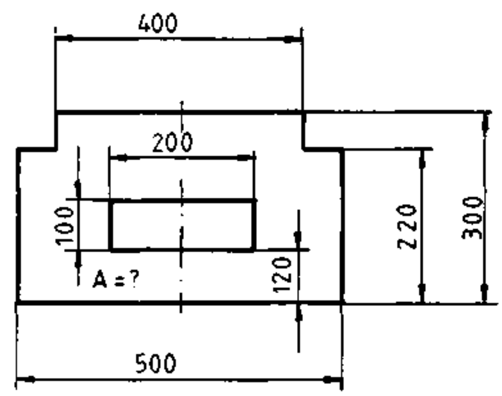

A = ☐ cm²

⑦

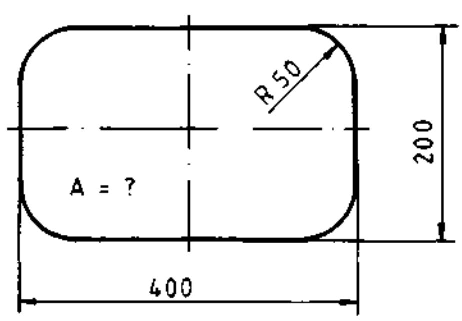

A = ☐ cm²

⑧

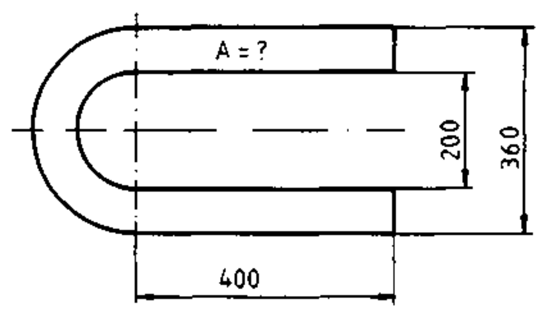

A = ☐ cm²

9

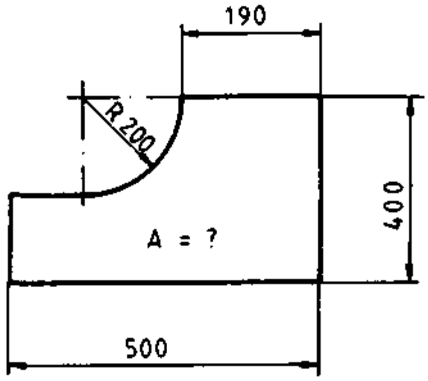

A = ☐ dm^2

10

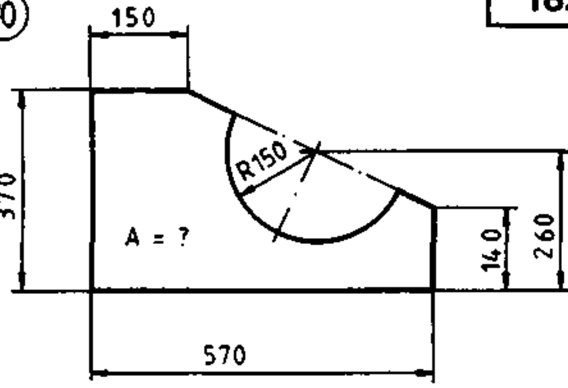

A = ☐ m^2

11

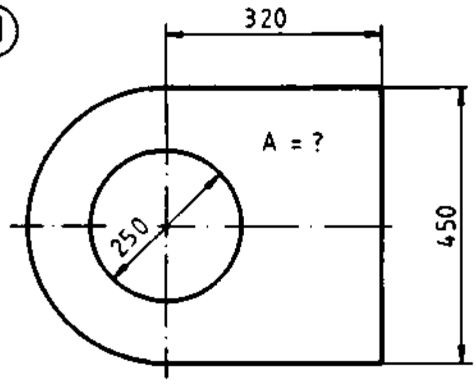

A = ☐ dm^2

12

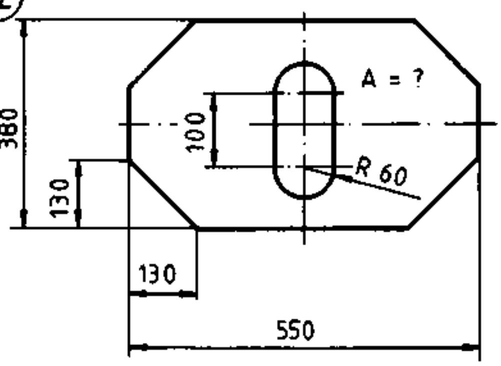

A = ☐ dm^2

13

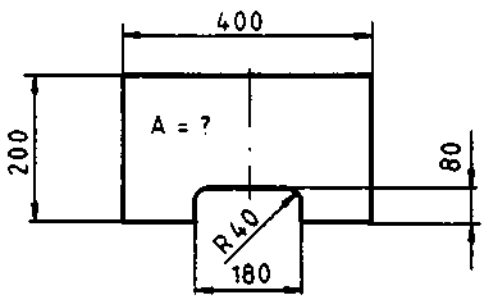

A = ☐ dm^2

14

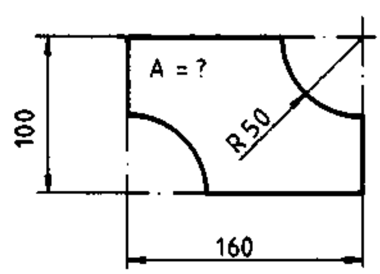

A = ☐ dm^2

15

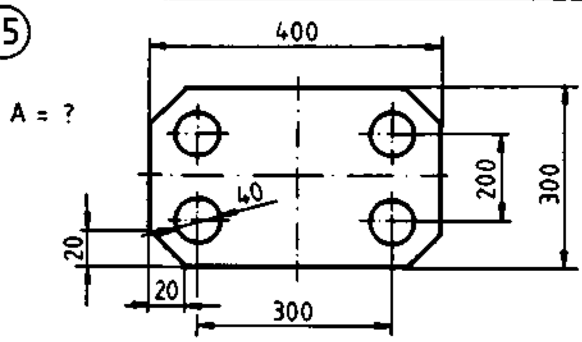

A = ☐ dm^2

16

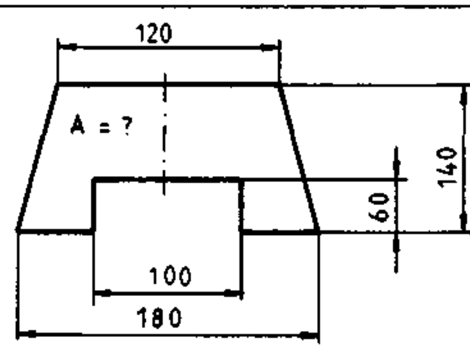

A = ☐ dm^2

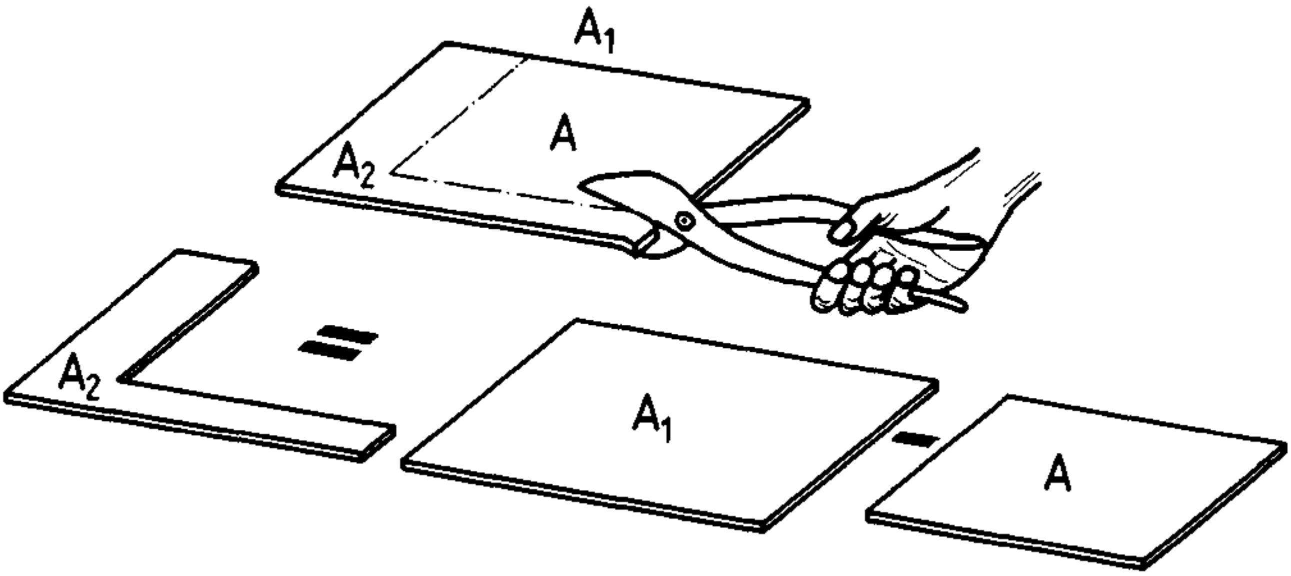

$$\mathbf{A_2} = \quad - $$

$$A_{2\%} = \frac{A_2 \cdot 100}{A_1}$$

1.

$A_1 = 1{,}5\ m^2$

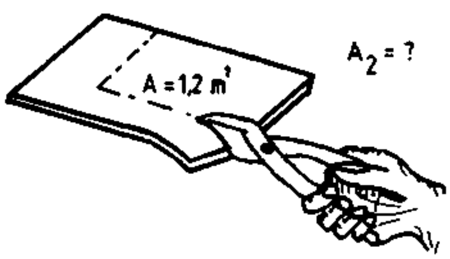

$A_2 = ?$

$A_2 = A_1 - A$

$A_2 = 1{,}5m^2 - 1{,}2m^2$

$\underline{\underline{A_2 = 0{,}3m^2}}$

2.

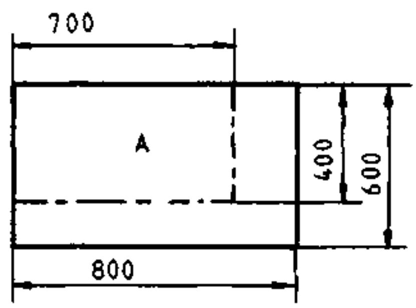

$A_2 = ?$, $A_{2\%} = ?$

$A_2 = A_1 - A$

$A_1 = 8dm \cdot 6dm$

$A_1 = 48dm^2$

$A = 7dm \cdot 4dm$

$A = 28dm^2$

$A_2 = 48dm^2 - 28dm^2$

$A_2 = 20dm^2$

$\underline{\underline{A_{2\%} = 42\%}}$

Test :

a)

$A_1 = 1\ m^2$

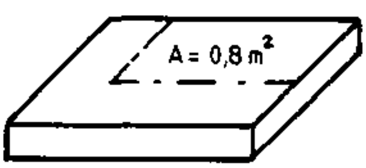

$A_2 = ?$

$A_2 =$ ☐ m^2

b)

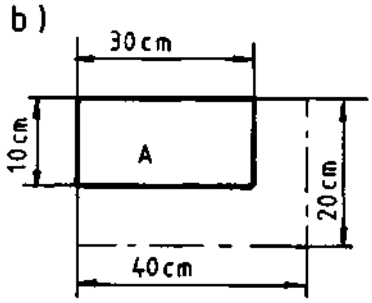

$A_2 = ?$

$A_2 =$ ☐ cm^2

c)

$A_2 = ?$

$A_{2\%} = ?$

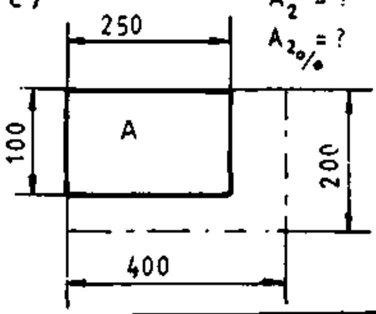

$A_2 =$ ☐

$A_{2\%} =$ ☐ mm^2

a) $A_2 = 0{,}2m^2$ b) $A_2 = 500cm^2$ c) $A_2 = 55000mm^2$, $A_{2\%} = 42\%$

1

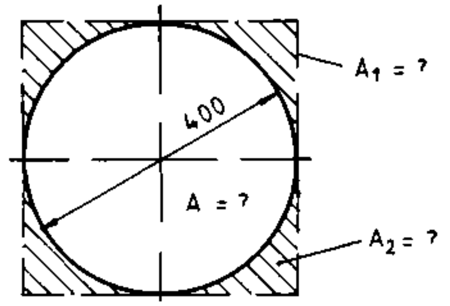

$A = \square\ \mathrm{cm}^2$; $A_1 = \square\ \mathrm{cm}^2$

$A_2 = \square\ \mathrm{cm}^2$; $A_{2\%} = \square\ \%$

2

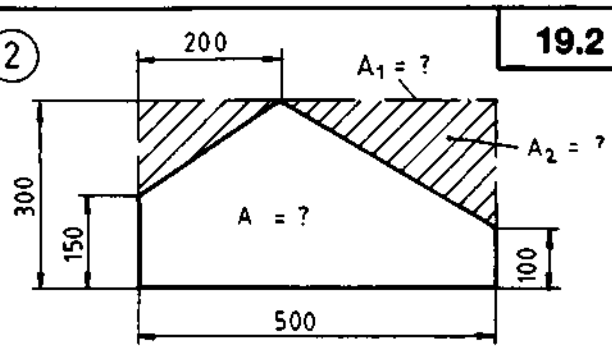

$A = \square\ \mathrm{cm}^2$; $A_1 = \square\ \mathrm{cm}^2$

$A_2 = \square\ \mathrm{cm}^2$; $A_{2\%} = \square\ \%$

3

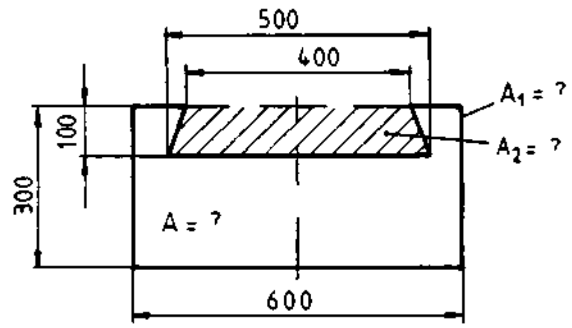

$A = \square\ \mathrm{cm}^2$; $A_1 = \square\ \mathrm{cm}^2$

$A_2 = \square\ \mathrm{cm}^2$; $A_{2\%} = \square\ \%$

4

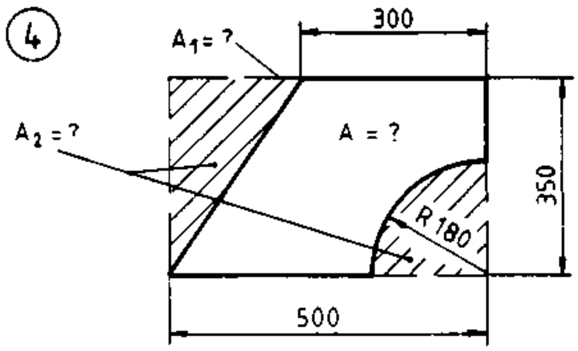

$A = \square\ \mathrm{cm}^2$; $A_1 = \square\ \mathrm{cm}^2$

$A_2 = \square\ \mathrm{cm}^2$; $A_{2\%} = \square\ \%$

5

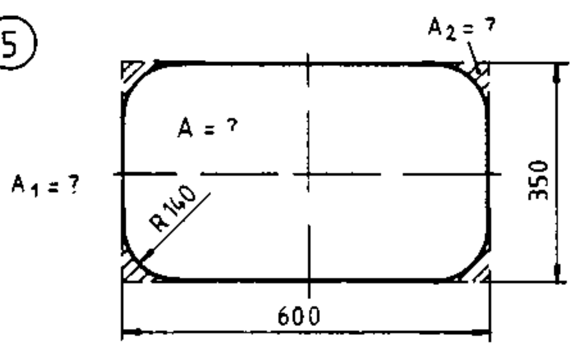

$A = \square\ \mathrm{cm}^2$; $A_1 = \square\ \mathrm{cm}^2$

$A_2 = \square\ \mathrm{cm}^2$; $A_{2\%} = \square\ \%$

6

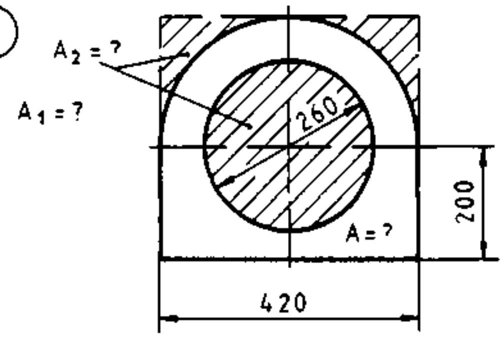

$A = \square\ \mathrm{cm}^2$; $A_1 = \square\ \mathrm{cm}^2$

$A_2 = \square\ \mathrm{cm}^2$; $A_{2\%} = \square\ \%$

7

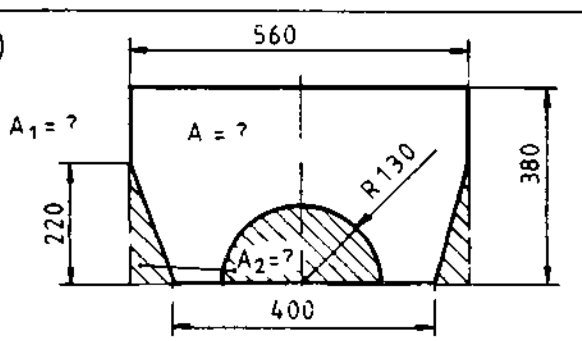

$A = \square\ \mathrm{cm}^2$; $A_1 = \square\ \mathrm{cm}^2$

$A_2 = \square\ \mathrm{cm}^2$; $A_{2\%} = \square\ \%$

8

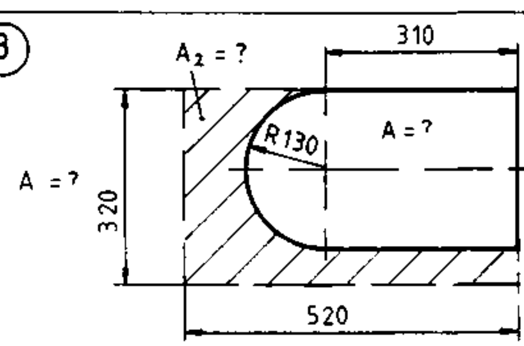

$A = \square\ \mathrm{cm}^2$; $A_1 = \square\ \mathrm{cm}^2$

$A_2 = \square\ \mathrm{cm}^2$; $A_{2\%} = \square\ \%$

gtz		20.1

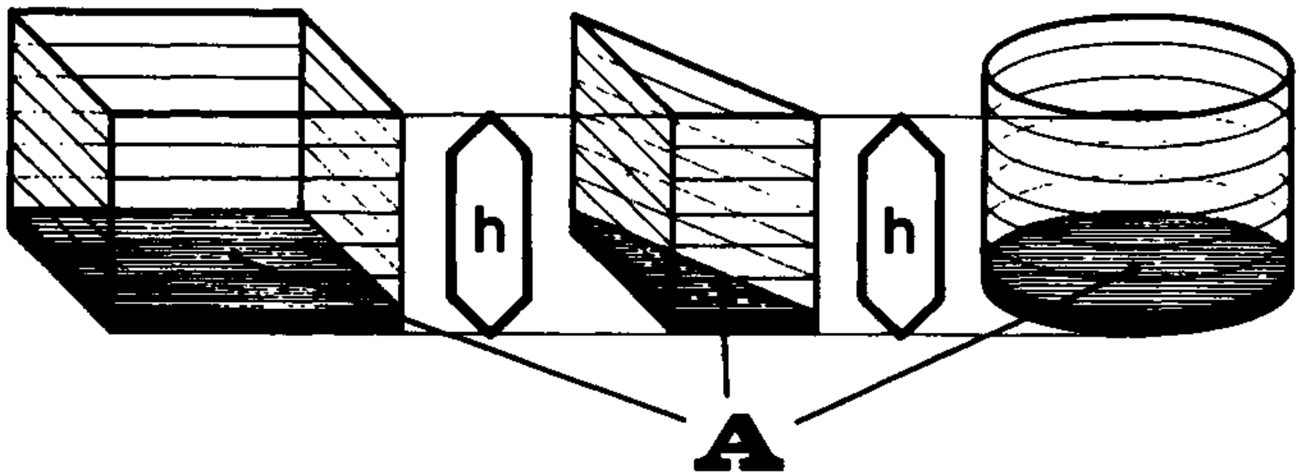

$$\boxed{V = \quad \cdot \quad}$$

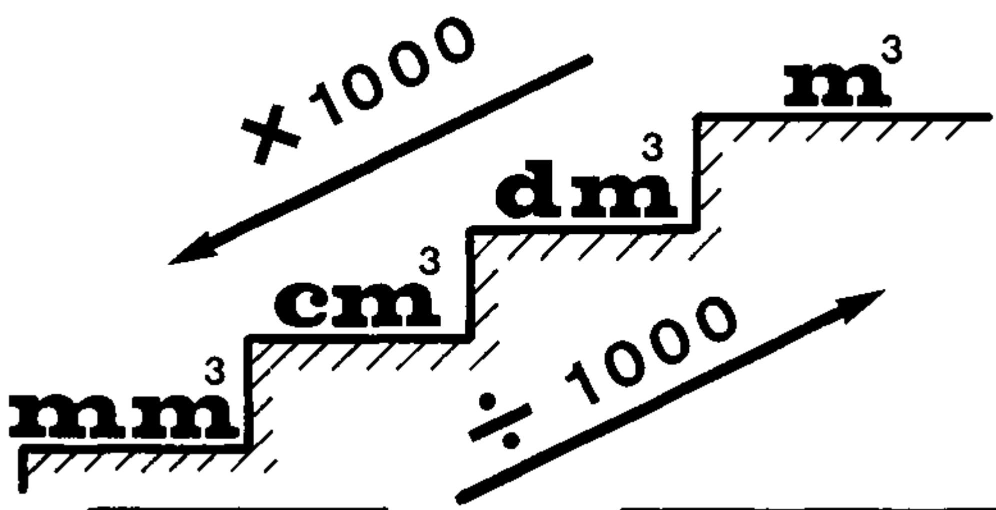

$1m^3$ = ☐ dm^3 = ☐ cm^3

Test:

a)

	m^3	dm^3	cm^3
1.	0,2		
2.		400	
3.			3000

b)

V = ?

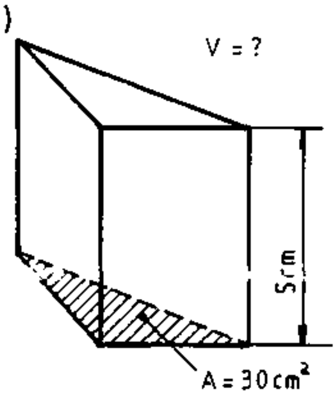

V = ☐ cm^3

c)

V = ?

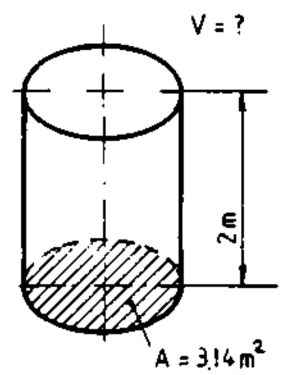

V = ☐ m^3

a) 1. $0,2m^3 = 200dm^3 = 200000cm^3$
2. $400dm^3 = 0,4m^3 = 400000cm^3$
3. $3000cm^3 = 0,003m^3 = 3dm^3$

b) $V = 150cm^3$

c) $V = 6,28m^3$

20.2

1

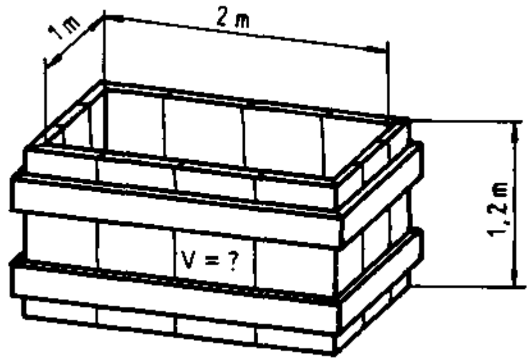

V = ______ m^3

2

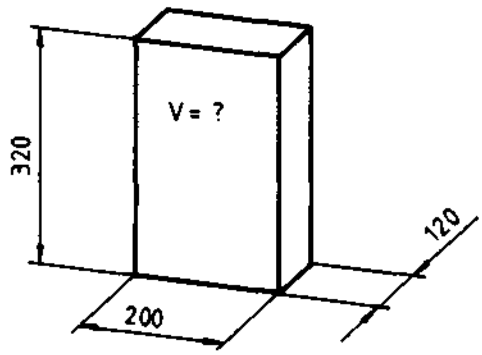

V = ______ cm^3

3

V = ?

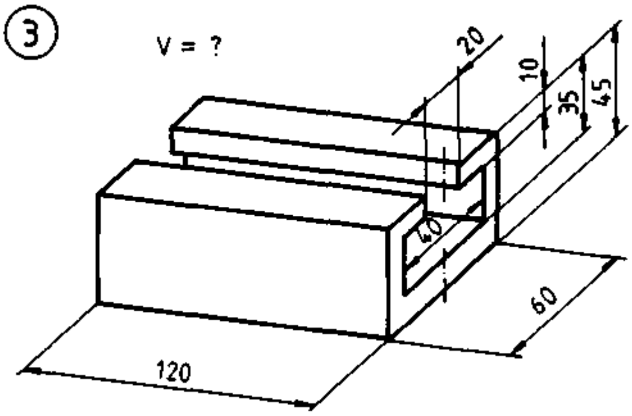

V = ______ cm^3

4

V = ?

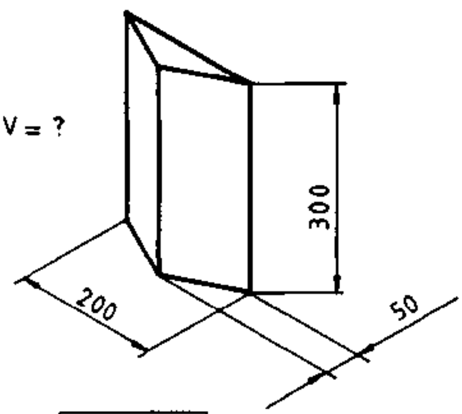

V = ______ cm^3

5

V = ?

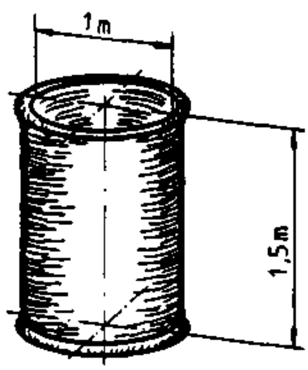

V = ______ m^3

6

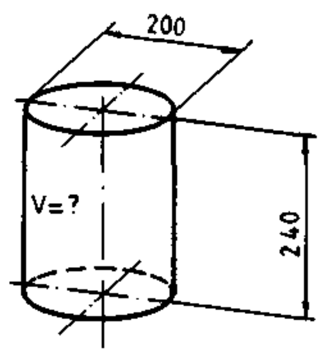

V = ______ cm^3

7

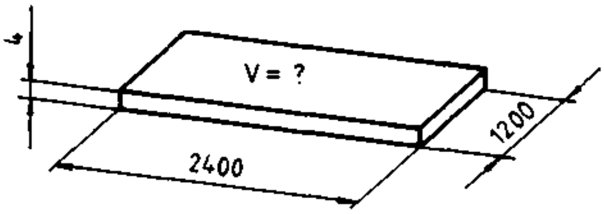

V = ______ dm^3

8

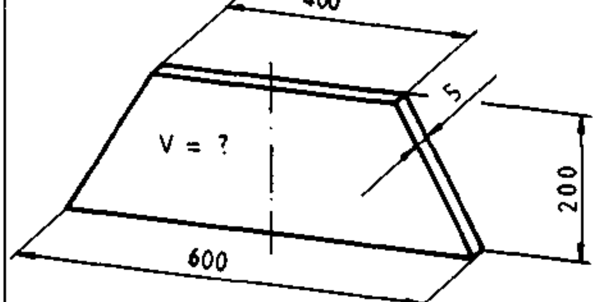

V = ______ dm^3

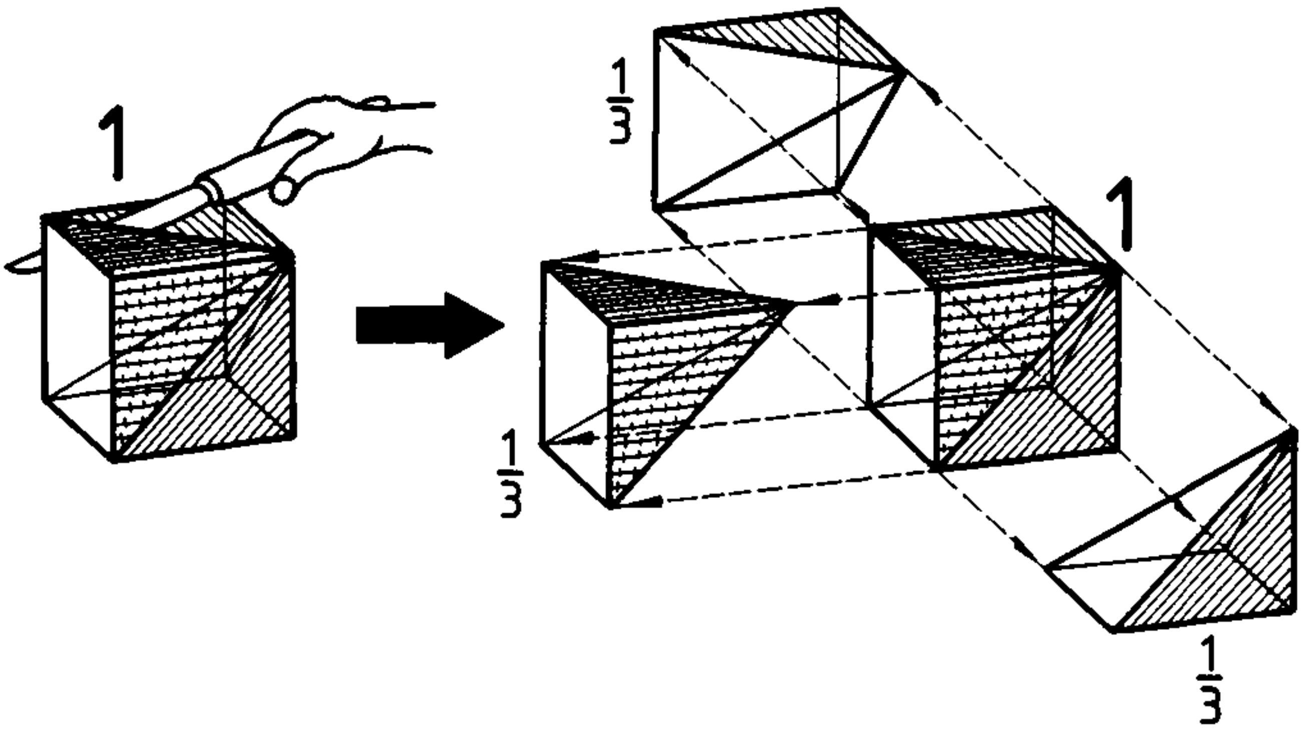

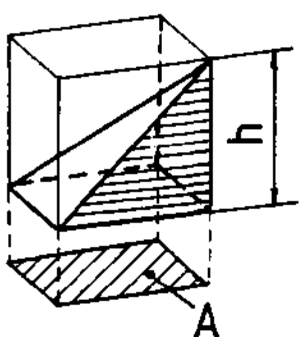

V = ———

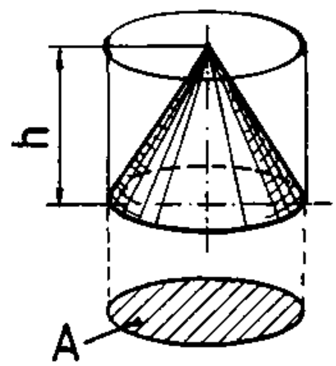

1.

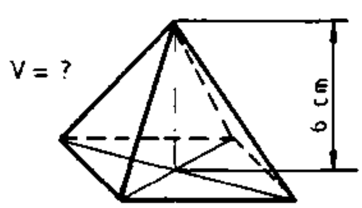

$V = \frac{A \cdot h}{3}$

$V = \frac{4\,cm^2 \cdot 6\,cm}{3}$

$\underline{\underline{V = 8\,cm^3}}$

2.

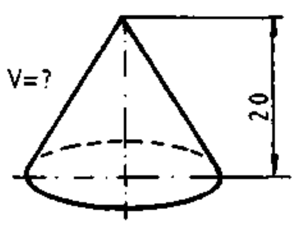

$V = \frac{A \cdot h}{3}$

$V = \frac{314\,mm^2 \cdot 20\,mm}{3}$

$\underline{\underline{V = 2093\,mm^3}}$

Test:

A = 4 cm^2

A = 314 mm^2

a)

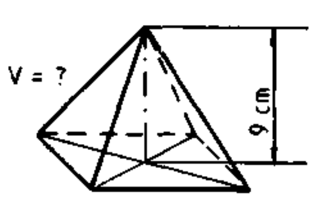

A = 8 cm^2

V = ☐ cm^3

b)

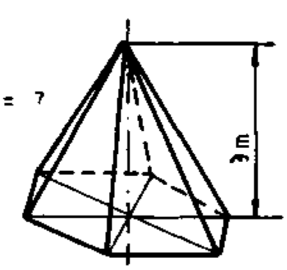

A = 2 m^2

V = ☐ m^3

c)

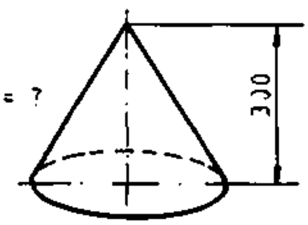

A = 100 mm^2

V = ☐ cm^3

a) V = 24 cm^3 b) V = 2 m^3 c) V = 10 cm^3

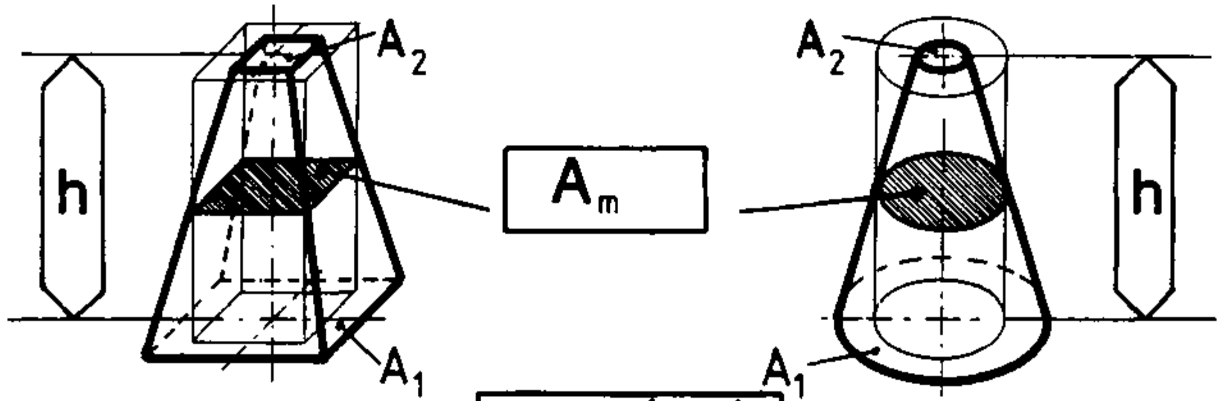

$$\boxed{A_m = \frac{A_1 + A_2}{2}}$$

$$\boxed{V \approx \quad \cdot \quad}$$

1.

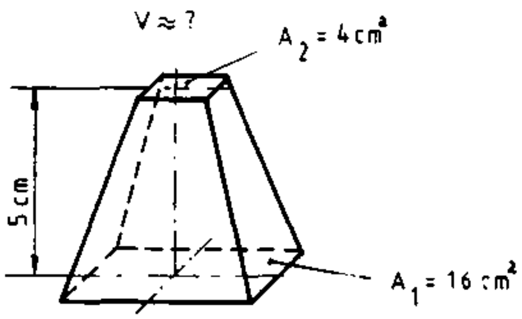

$V \approx A_m \cdot h$

$A_m = \dfrac{A_1 + A_2}{2}$

$A_m = \dfrac{16cm^2 + 4cm^2}{2}$

$A_m = 10cm^2$

$V \approx 10cm^2 \cdot 5cm$

$\underline{\underline{V \approx 50cm^3}}$

2.

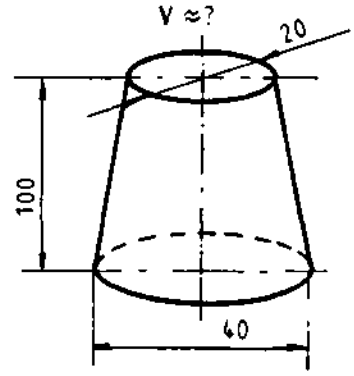

$V \approx A_m \cdot h$

$A_m = \dfrac{A_1 + A_2}{2}$

$A_m = \dfrac{(4^2 + 2^2)cm^2 \cdot 0,785}{2}$

$A_m = 7,85cm^2$

$V \approx 7,85cm^2 \cdot 10cm$

$\underline{\underline{V \approx 78,5cm^3}}$

Test:

a)

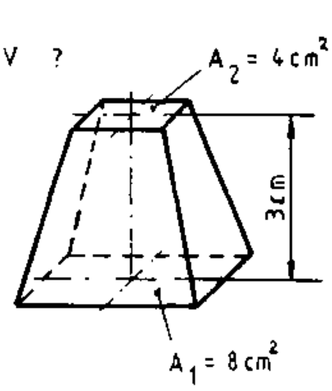

b)

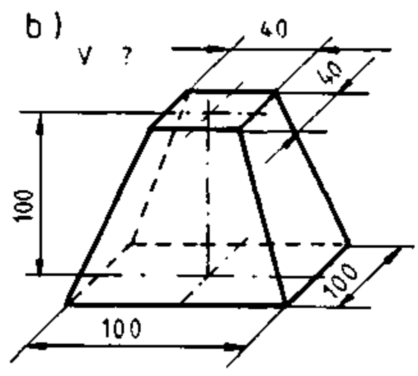

c)

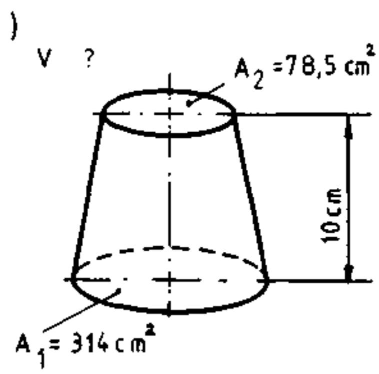

a)	b)	c)
$V \approx$ ____ cm^3	$V \approx$ ____ cm^3	$V \approx$ ____ cm^3

a) $V \approx 18cm^3$ b) $V \approx 580cm^3$ c) $V \approx 1962,5cm^3$

(1)

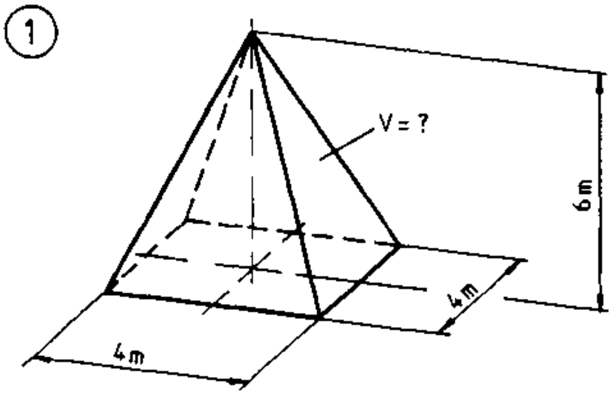

V = ☐ m^3

(2)

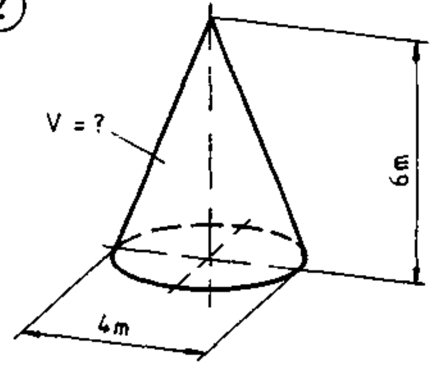

V = ☐ m^3

(3)

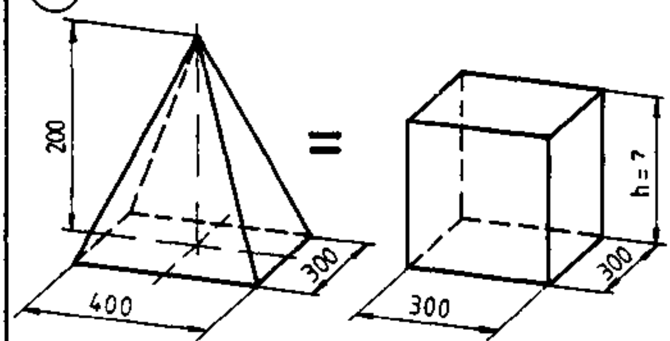

h = ☐ mm

(4)

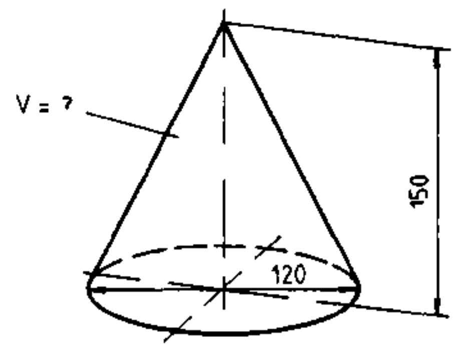

V = ☐ dm^3

(5)

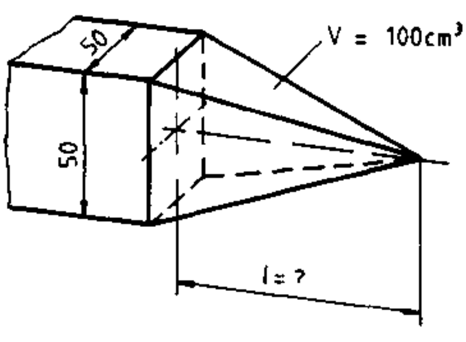

l = ☐ mm

(6)

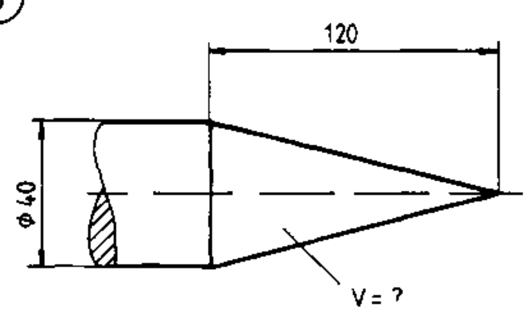

V = ☐ dm^3

(7)

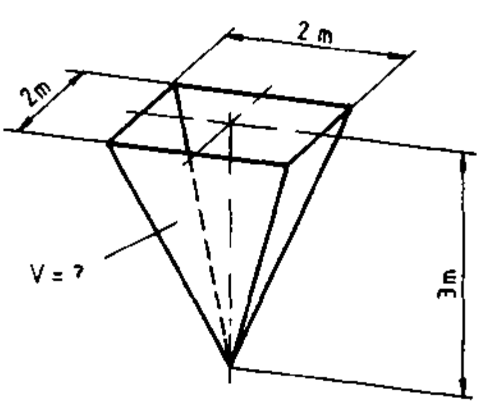

V = ☐ m^3

(8)

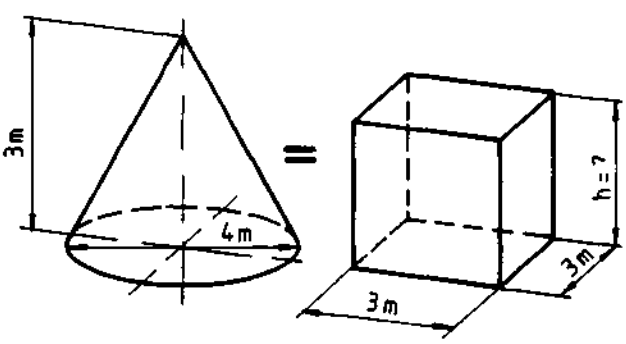

h = ☐ m

(9)

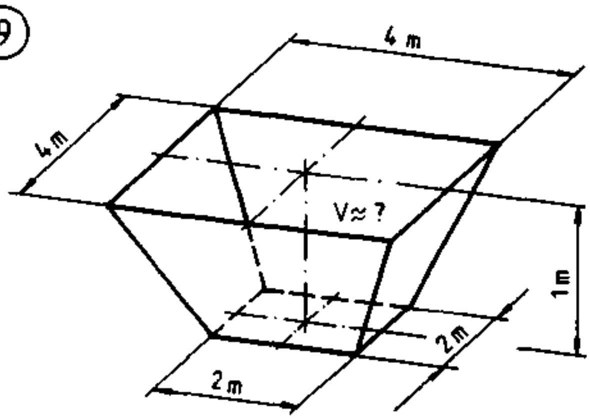

V≈ ☐ m³

(10)

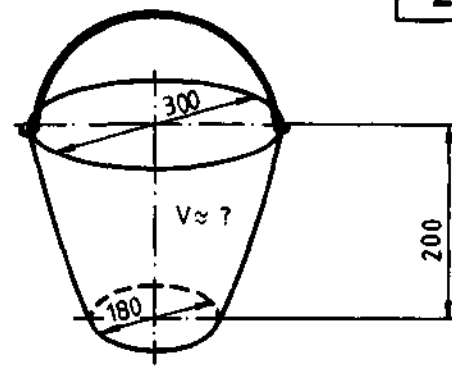

V≈ ☐ dm³

(11)

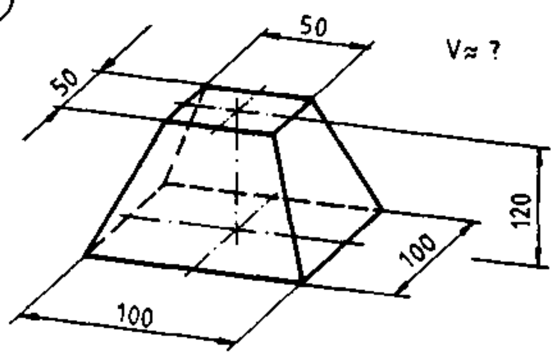

V≈ ☐ cm³

(12)

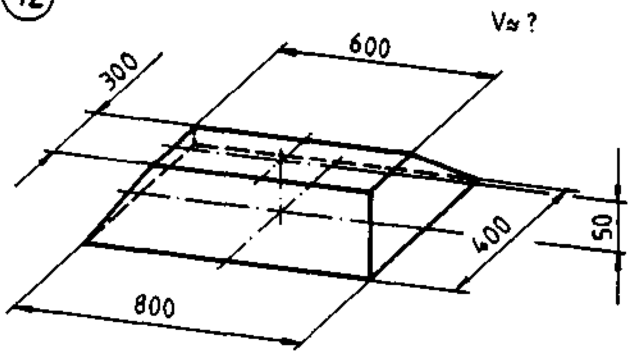

V≈ ☐ dm³

(13)

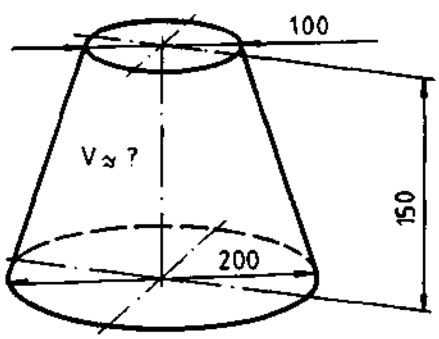

V≈ ☐ dm³

(14)

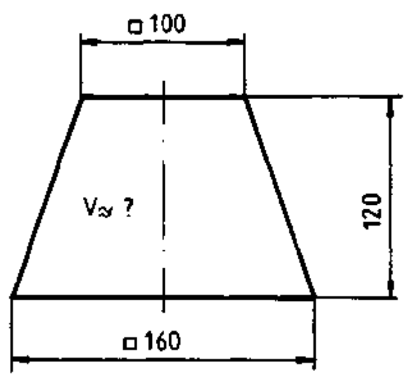

V≈ ☐ dm³

(15)

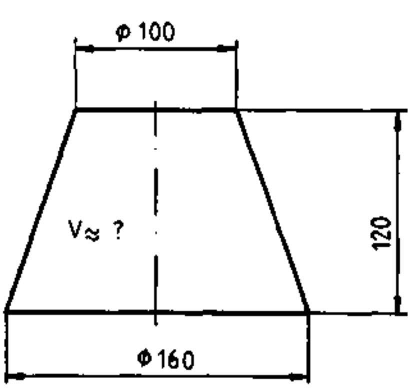

V≈ ☐ dm³

(16)

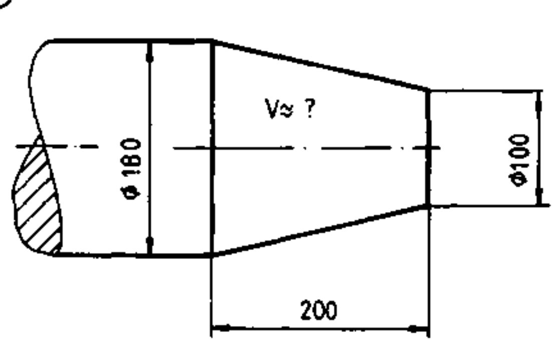

V≈ ☐ dm³

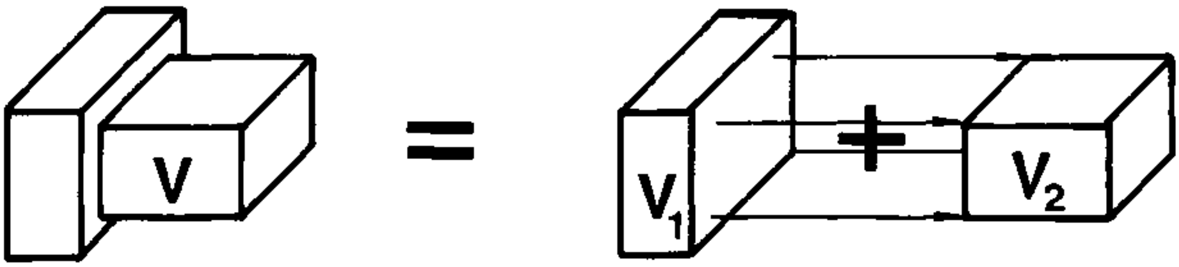

V = +

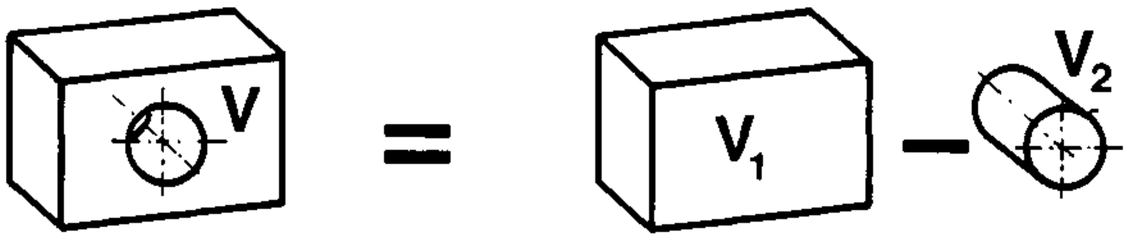

V = −

1.

V = ?

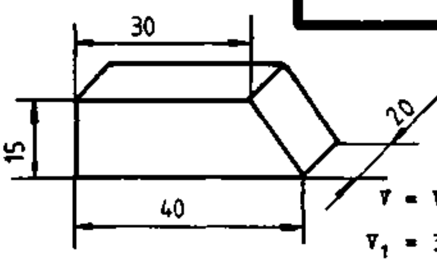

$V = V_1 + V_2$

$V_1 = 3cm \cdot 1,5cm \cdot 2cm$

$V_1 = 9cm^3$

$V_2 = 1,5cm \cdot 1cm \cdot 2cm \cdot \frac{1}{2}$

$V_2 = 1,5cm^3$

$V = 9cm^3 + 1,5cm^3$

$\underline{\underline{V = 10,5cm^3}}$

2.

V = ?

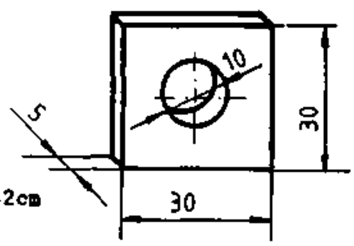

$V = V_1 - V_2$

$V_1 = 0,5cm \cdot 3cm \cdot 3cm$

$V_1 = 4,5cm^3$

$V_2 = \frac{1^2cm^2 \cdot 3,14 \cdot 0,5}{4}$

$V_2 = 0,3925cm^3$

$V = 4,5cm^3 - 0,3925cm^3$

$\underline{\underline{V = 4,1075cm^3}}$

Test:

a) V = ?

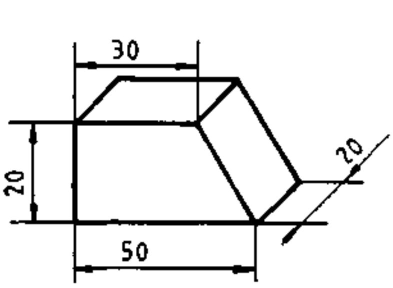

V = ______ cm^3

b) V = ?

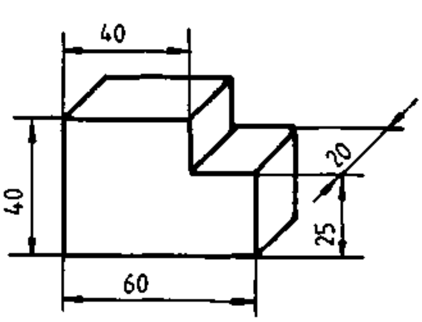

V = ______ cm^3

c) V = ?

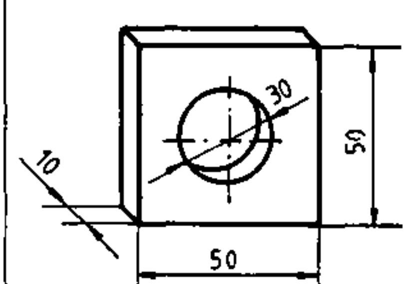

V = ______ cm^3

c) $V = 17,935cm^3$ b) $V = 42cm^3$ a) $V = 16cm^3$

22.2

①

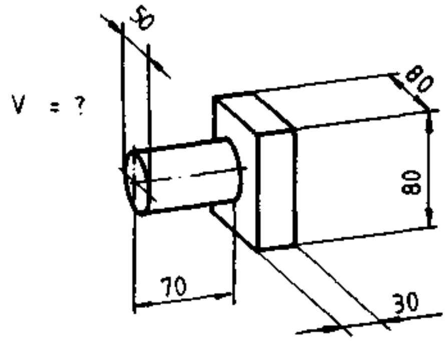

V = ______ cm³

②

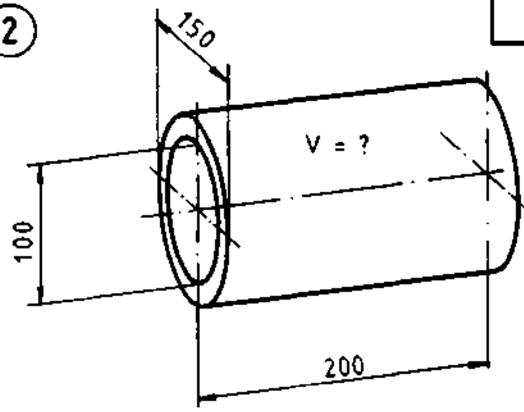

V = ______ cm³

③

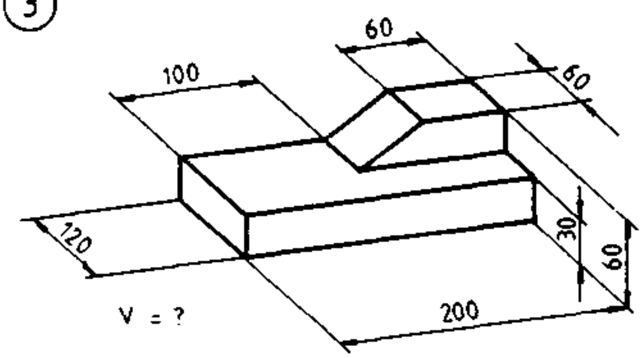

V = ______ cm³

④

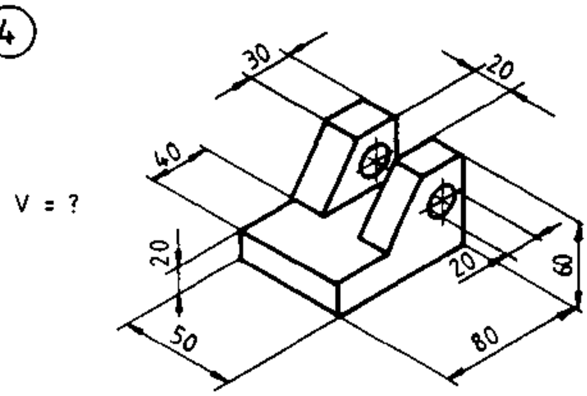

V = ______ cm³

⑤

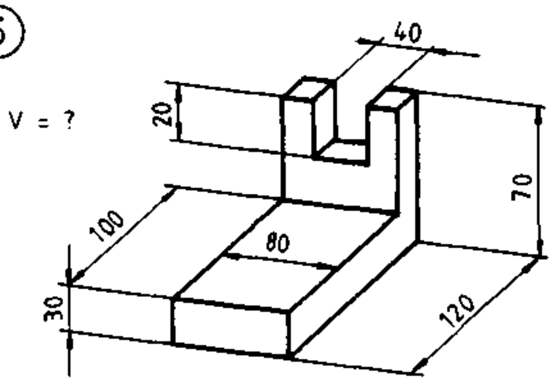

V = ______ cm³

⑥

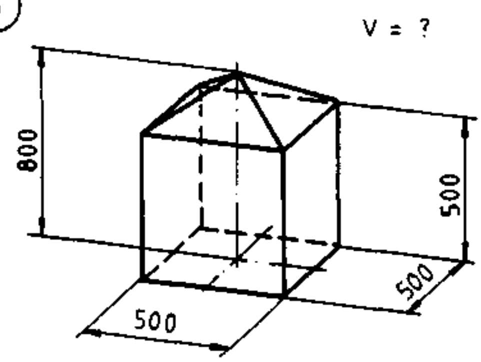

V = ______ dm³

⑦

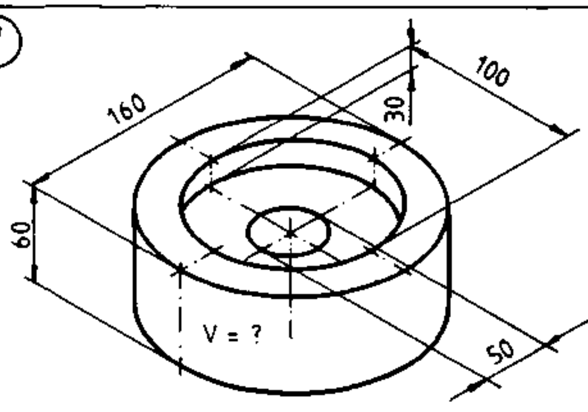

V = ______ dm³

⑧

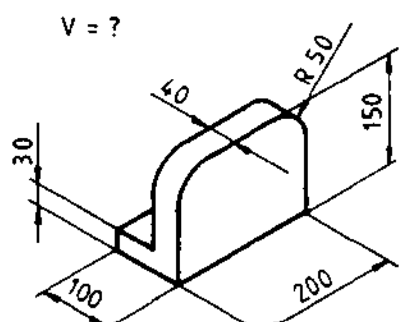

V = ______ cm³

(9)

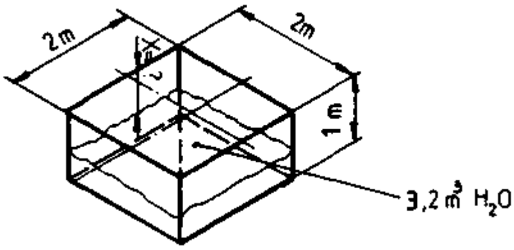

X = ____ m

(10)

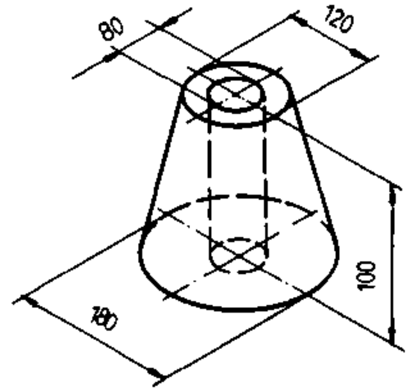

V = ?

V = ____ dm^3

(11)

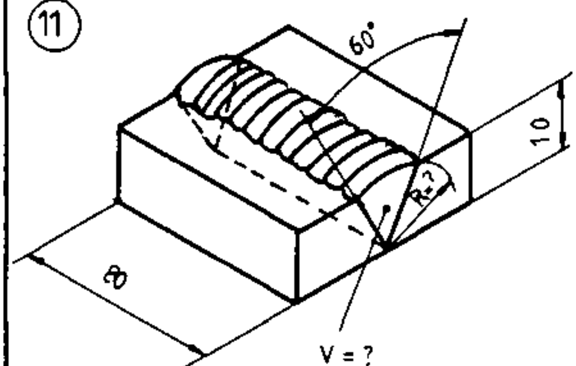

V = ____ cm^3 R = ____ cm

(12)

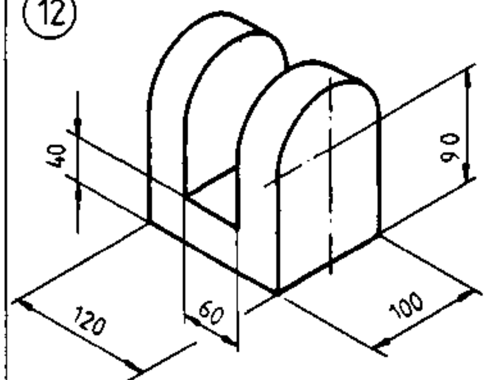

V = ?

V = ____ dm^3

(13)

V = ?

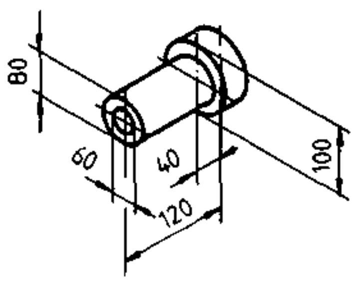

V = ____ cm^3

(14)

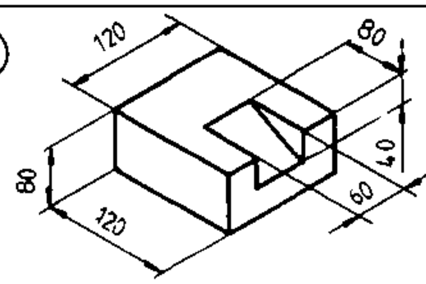

V = ?

V = ____ cm^3

(15)

V = ?

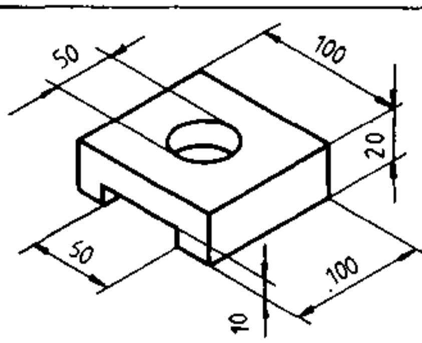

V = ____ cm^3

(16)

V = ?

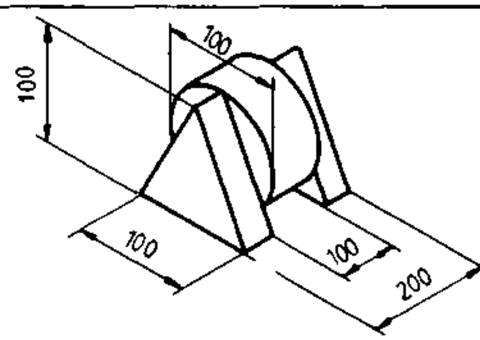

V = ____ cm^3

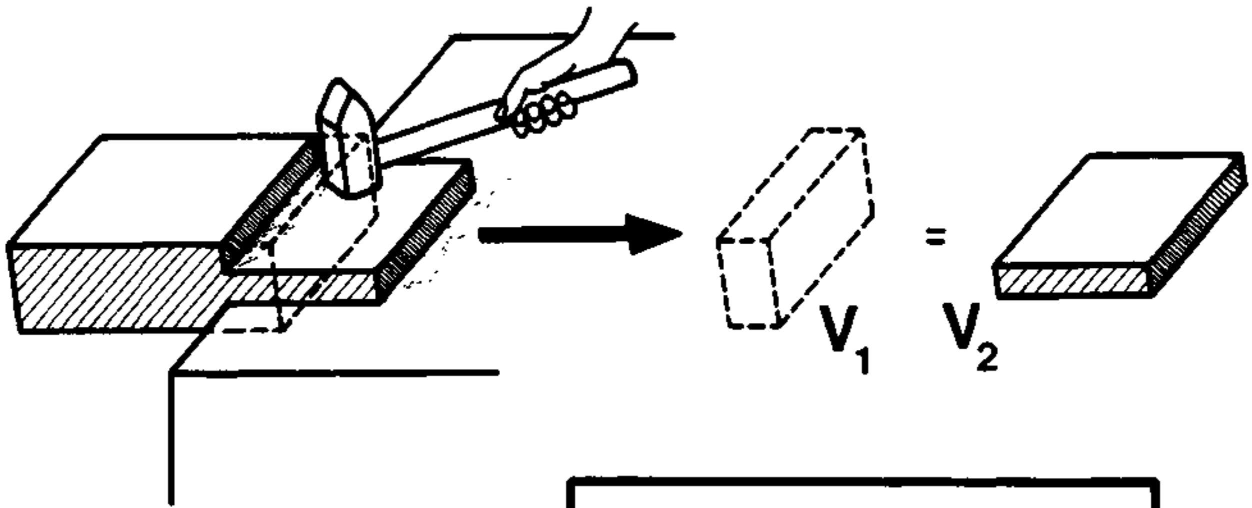

V_1 =

1.

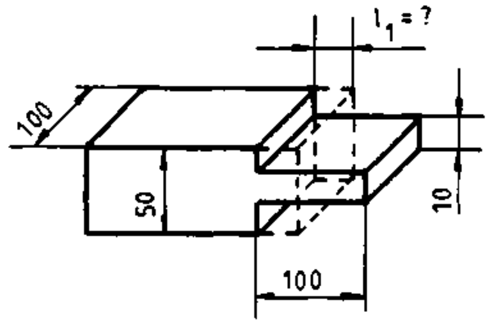

$$V_1 = V_2$$
$$\cancel{100mm}\cdot 50mm\cdot l_1 = 10mm\cdot\cancel{100mm}\cdot 100mm$$
$$l_1 = \frac{1\cancel{0}\cdot 100mm}{5\cancel{0}}$$
$$\underline{\underline{l_1 = 20mm}}$$

2.

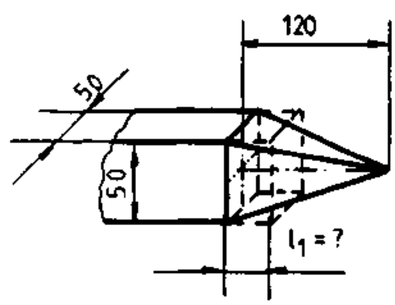

$$V_1 = V_2$$
$$\cancel{50mm}\cdot\cancel{50mm}\cdot l_1 = \cancel{50mm}\cdot\cancel{50mm}\cdot 120mm\cdot\frac{1}{3}$$
$$\underline{\underline{l_1 = 40mm}}$$

Test:

a)

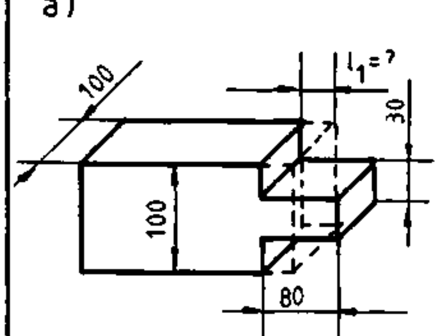

b)

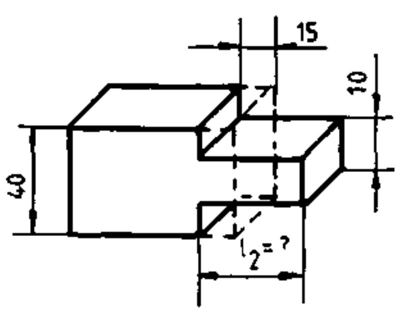

c)

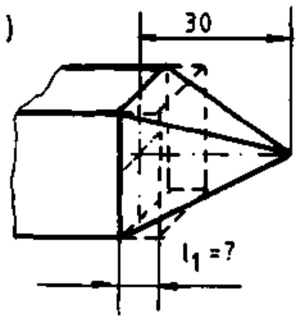

a)	b)	c)
l_1 = mm	l_2 = mm	l_1 = mm

c) l_1 = 10mm   b) l_2 = 60mm   a) l_1 = 24mm

1

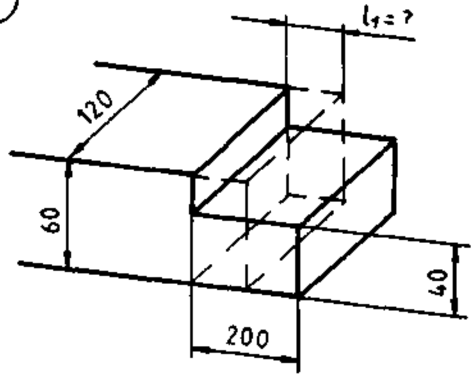

l_1 = [ ] mm

2

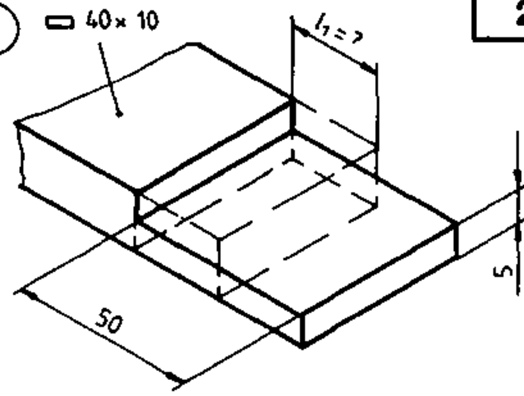

l_1 = [ ] mm

3

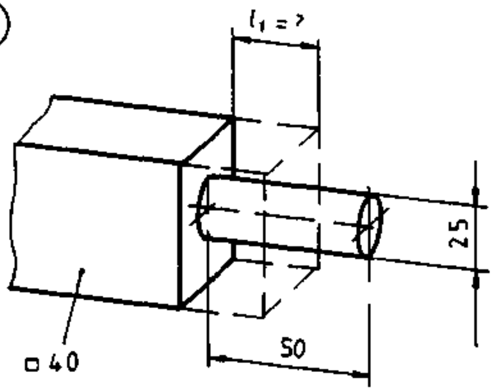

l_1 = [ ] mm

4

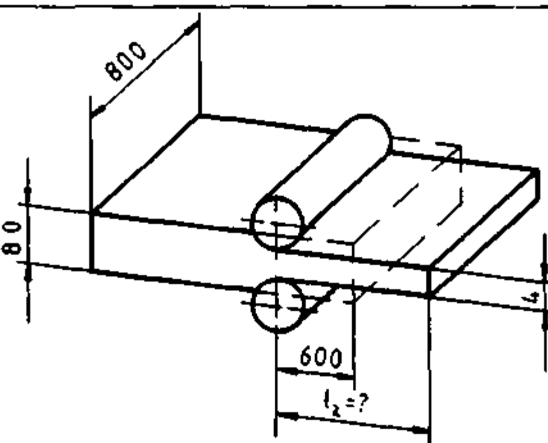

l_2 = [ ] m

5

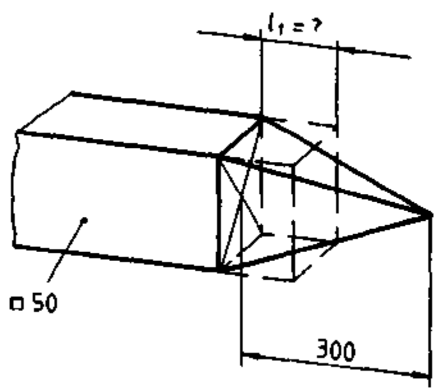

l_1 = [ ] mm

6

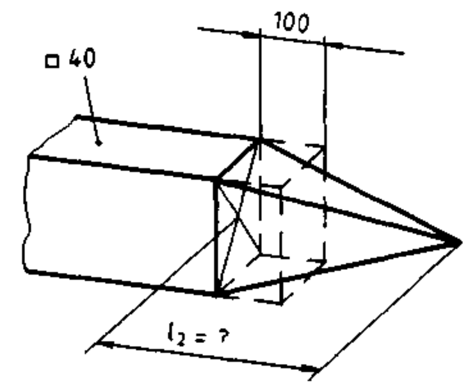

l_2 = [ ] mm

7

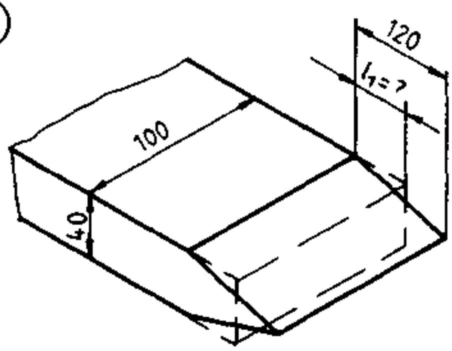

l_1 = [ ] mm

8

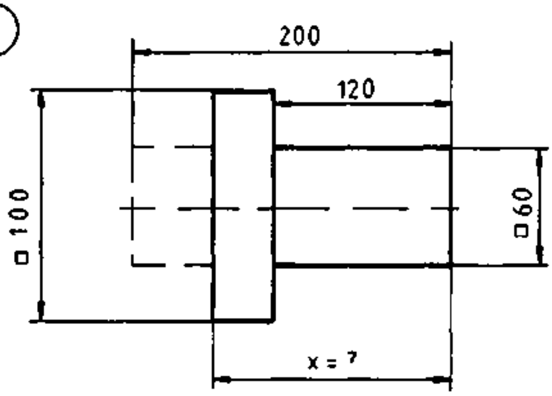

x = [ ] mm

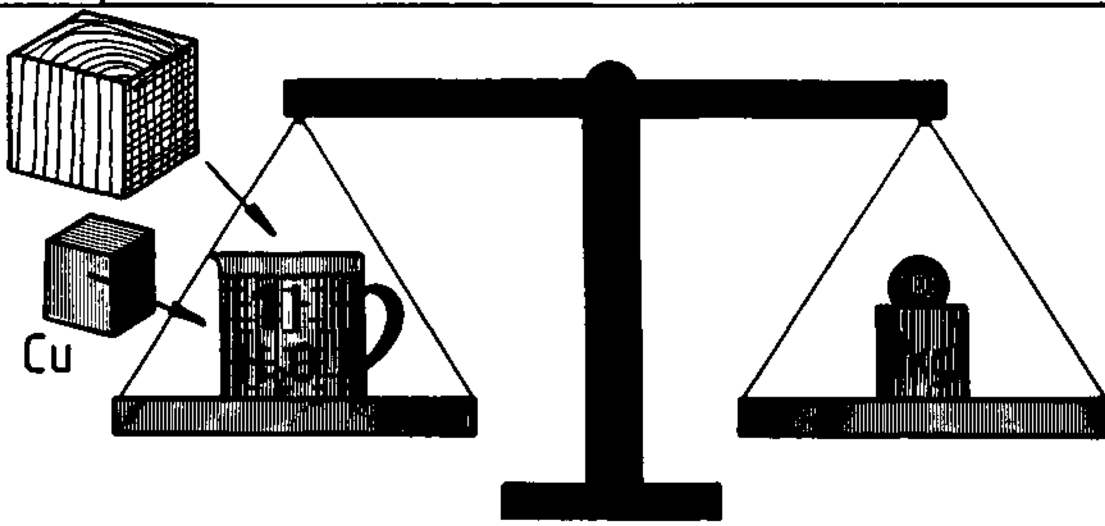

= ———

ρ = ———

$m = \rho \cdot V$

1 t = [   ] kg = [   ] g

1.

m = ?

$V = 10\,dm^3$

$\rho = 7{,}8\ \frac{kg}{dm^3}$

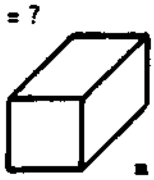

$m = \rho \cdot V$

$m = 7{,}8\frac{kg}{dm^3} \cdot 10dm^3$

$\underline{\underline{m = 78kg}}$

2.

m = ?

$\rho = 2{,}7\ \frac{kg}{dm^3}$

$m = \rho \cdot V$

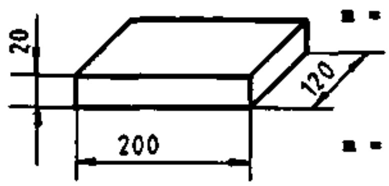

$V = 0{,}2dm \cdot 2dm \cdot 1{,}2dm$

$V = 0{,}48dm^3$

$m = 2{,}7\frac{kg}{dm^3} \cdot 0{,}48dm^3$

$\underline{\underline{m = 1{,}296kg}}$

Test:

a) m = ?

$\rho = 2{,}7\ \frac{kg}{dm^3}$ (Al)

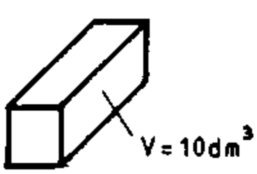

m = [   ] kg

b) m = ?

$\rho = 8{,}9\ \frac{kg}{dm^3}$ (Cu)

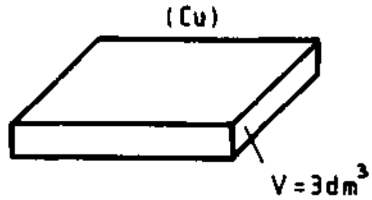

m = [   ] kg

c) m = ?

$\rho = 7{,}8\ \frac{kg}{dm^3}$ (St)

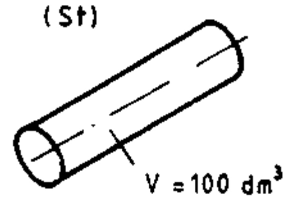

m = [   ] kg

m = [   ] t

a) m = 27kg   b) m = 26,7kg   c) m = 780kg = 0,78t

(1)

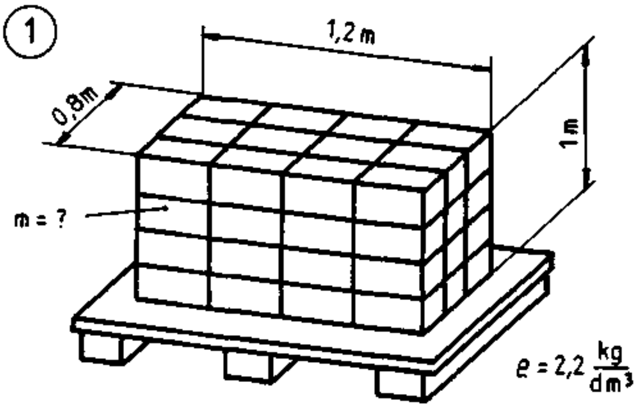

m = [ ] kg ; m = [ ] t

(2)

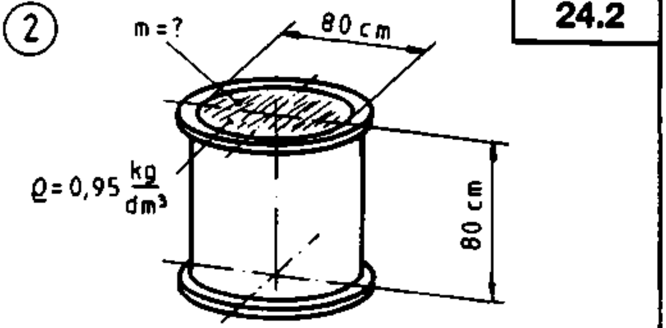

m = [ ] kg ; m = [ ] t

(3)

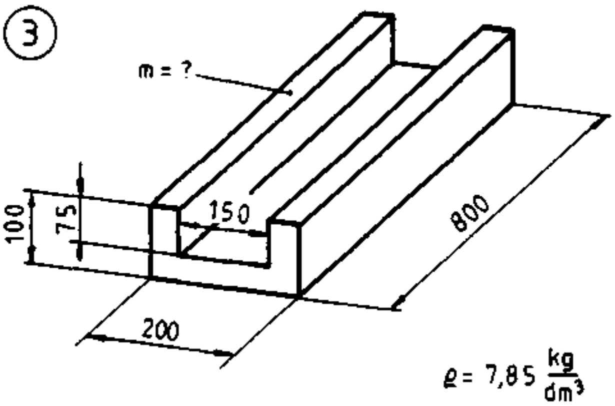

m = [ ] kg

(4)

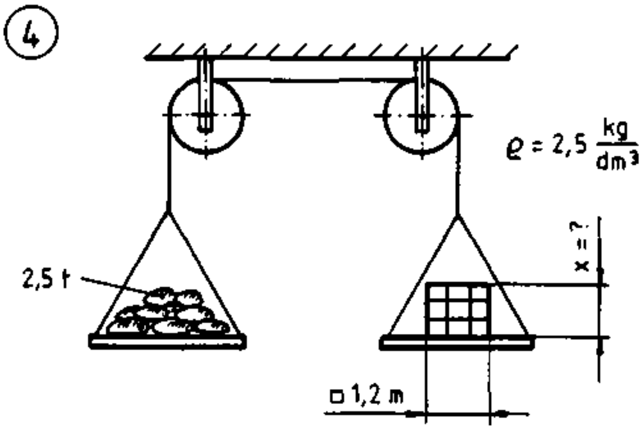

x = [ ] m

(5)

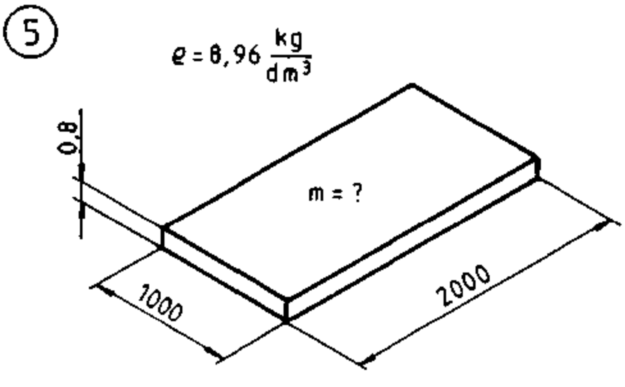

m = [ ] kg

(6)

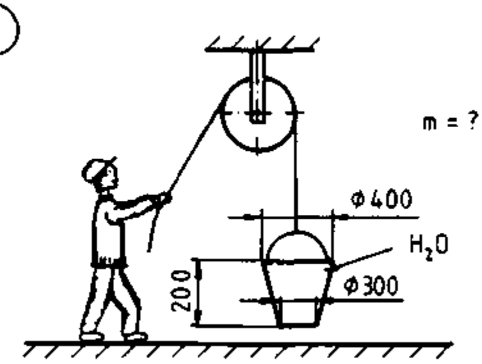

m = [ ] kg

(7)

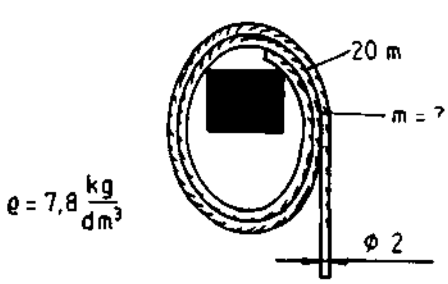

m = [ ] kg

(8)

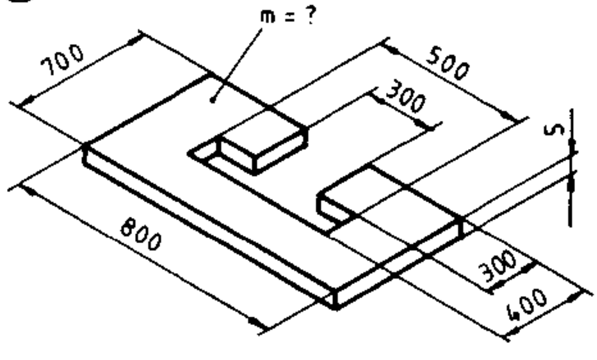

m = [ ] kg $\varrho = 7{,}8\ \frac{kg}{dm^3}$

25.1

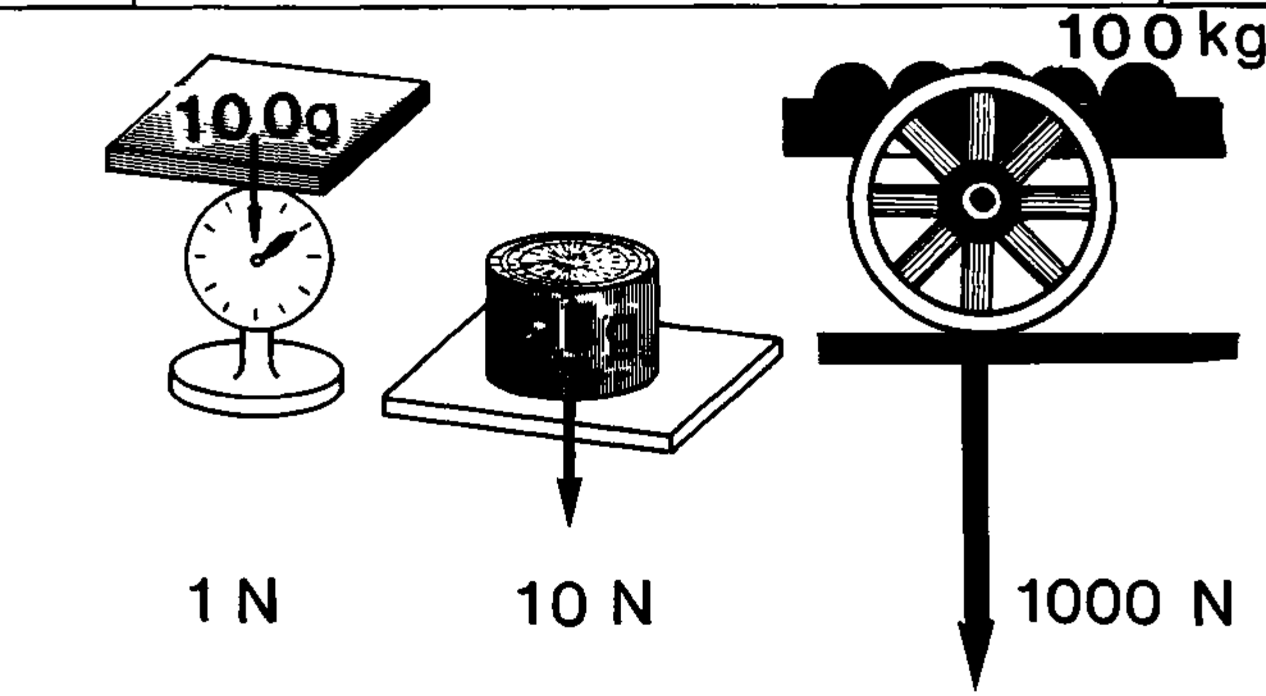

1 N   10 N   1000 N

1kg ≙ N

1kN = ______ daN = ______ N

1.

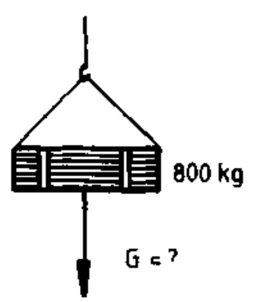

1kg ≙ 10N

Test. G = 8000N

2.

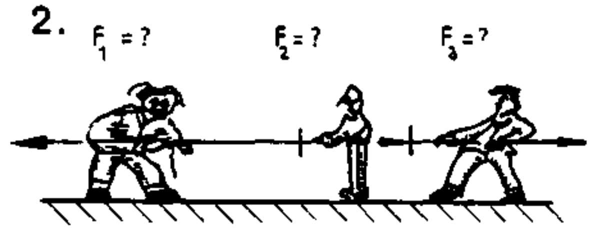

1cm ≙ 200 N

F_1 ≙ 4cm
F_1 = 4·200N
F_1 = 800N

F_2 ≙ 1,5cm
F_2 = 1,5·200N
F_2 = 300N

F_3 = 2,5cm
F_3 = 2,5·200N
F_3 = 500N

a)

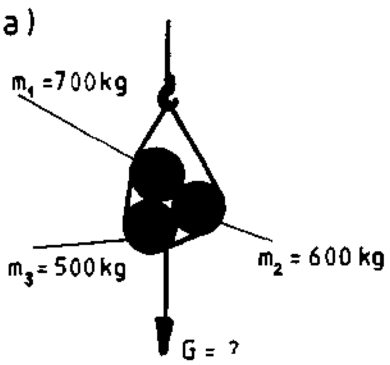

G = ______ kN

b)

1cm ≙ 5kN

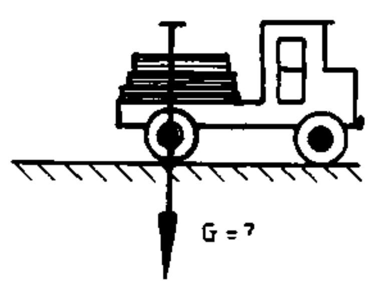

G = ______ N

c)

1cm ≙ 150 N

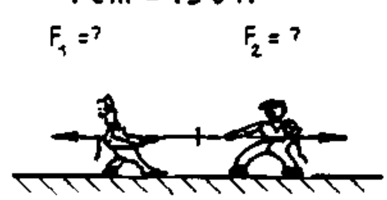

F_1 = ______ N

F_2 = ______ N

a) G = 18kN   b) G = 17500N   c) F_1 = 300N F_2 = 300N

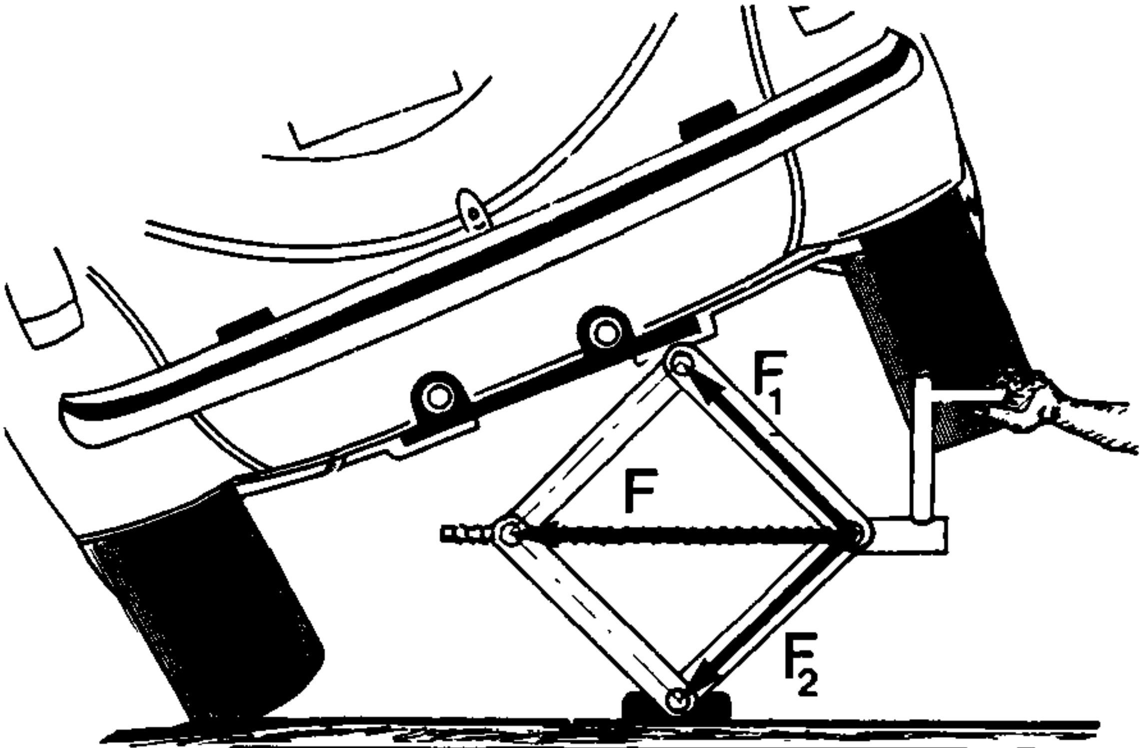

$$F^2 = \quad +$$

1.

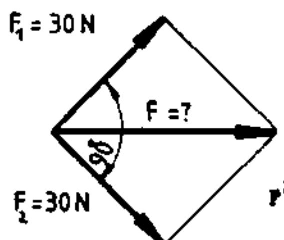

$$F^2 = F_1^2 + F_2^2$$
$$F = \sqrt{F_1^2 + F_2^2}$$
$$F = \sqrt{30^2 + 30^2}$$

Test: $\underline{\underline{F = 42{,}4N}}$

2.

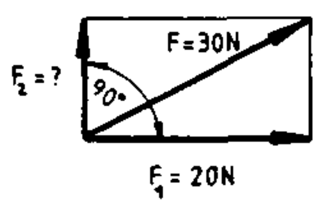

$$F^2 = F_1^2 + F_2^2$$
$$F_2^2 = F^2 - F_1^2$$
$$F_2 = \sqrt{F^2 - F_1^2}$$
$$F_2 = \sqrt{30^2 - 20^2}$$
$$\underline{\underline{F_2 = 22{,}4N}}$$

a)

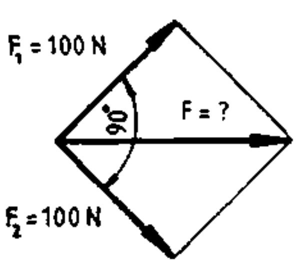

F = ______ N

b)

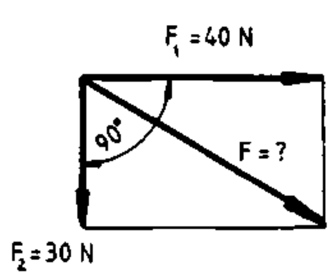

F = ______ N

c)

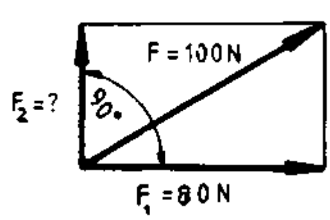

F_2 = ______ N

a) F = 141N b) F = 50N c) F_2 = 60N

①

	N	daN	kN
a)	2000		
b)		840	
c)			5,2
d)		225	
e)	4500		

②

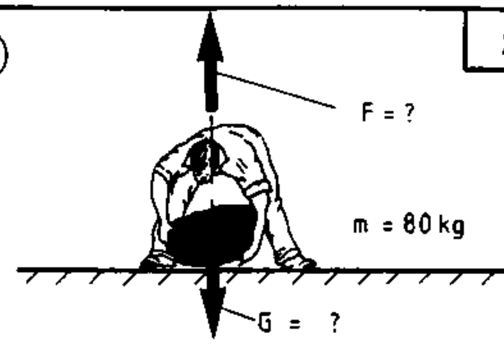

G = [ ] N ; F = [ ] N

③

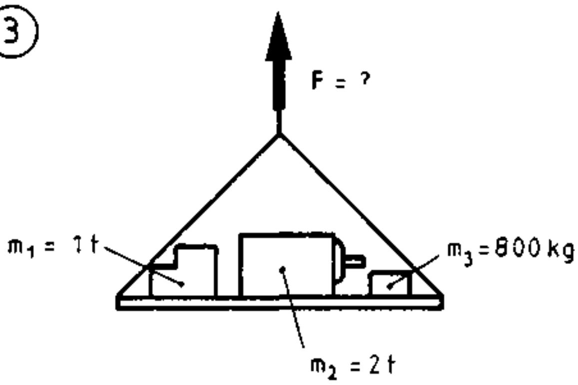

F = [ ] N

④

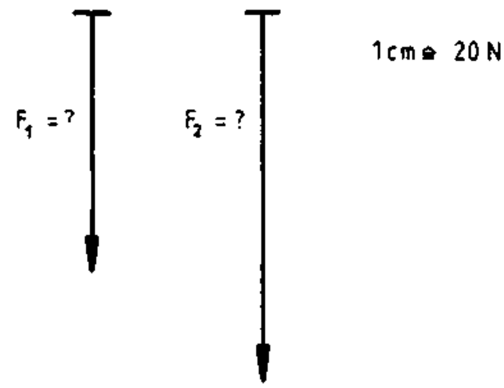

F_1 = [ ] N ; F_2 = [ ] N

⑤

1 cm ≙ 25 N

F_1 = [ ] N

F_2 = [ ] N , F_3 = [ ] N

⑥

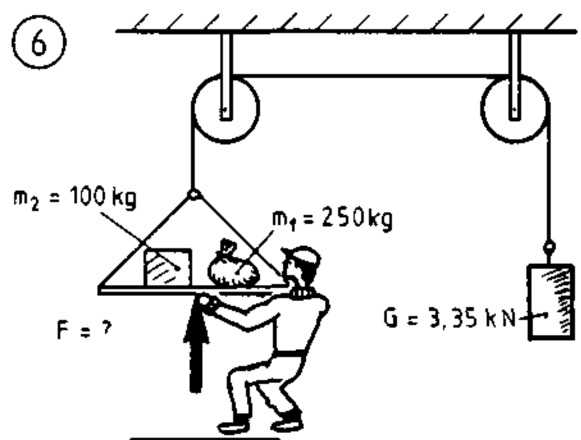

F = [ ] N

⑦

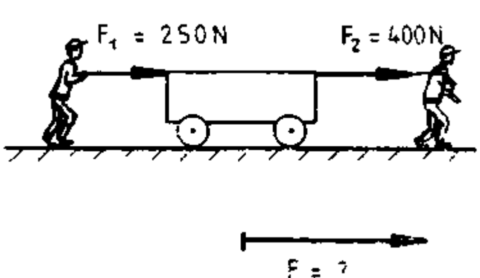

F = [ ] N

⑧

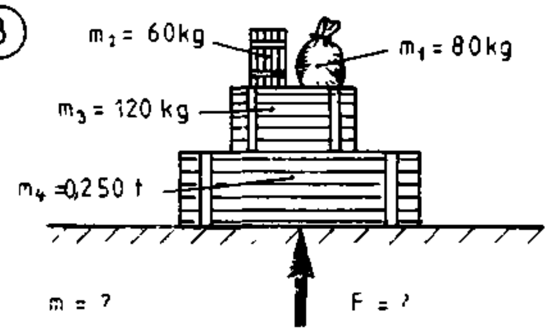

m = [ ] kg , F = [ ] kN

(1)

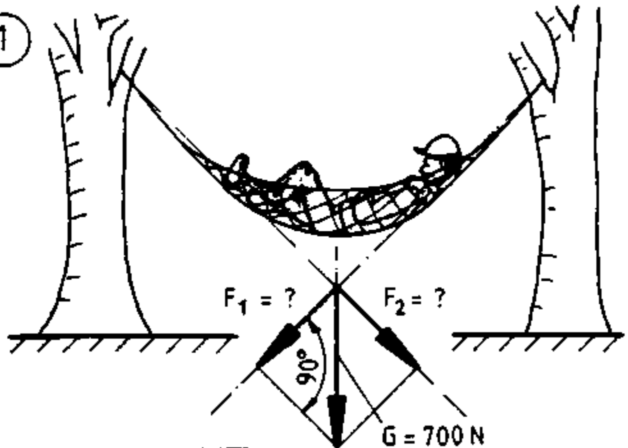

F_1 = [ ] N F_2 = [ ] N

(2)

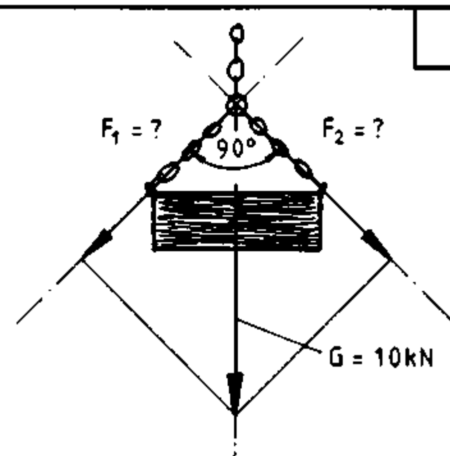

F_1 = [ ] N ; F_2 = [ ] N

(3)

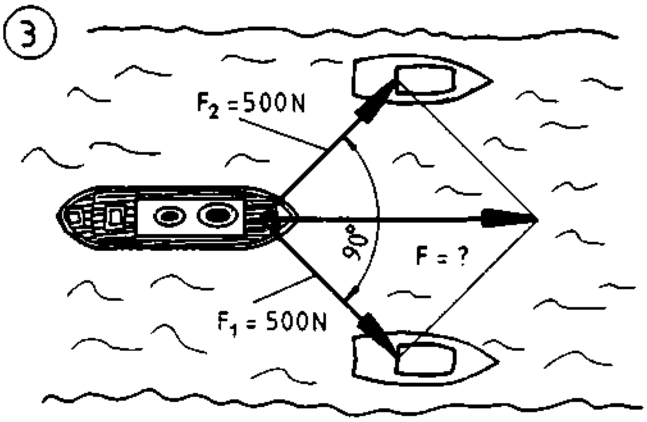

F = [ ] N

(4)

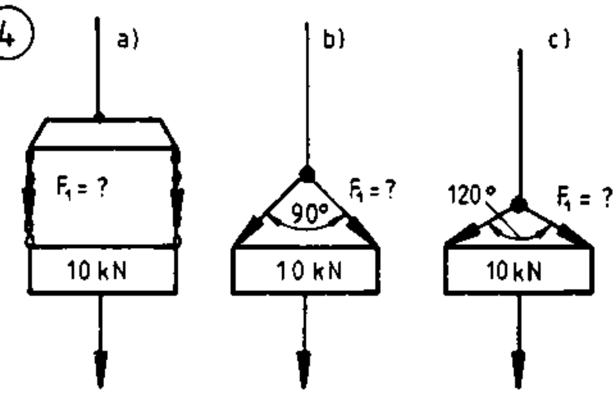

F_1 = [ ] kN ; F_1 = [ ] kN ; F_1 = [ ] kN

(5)

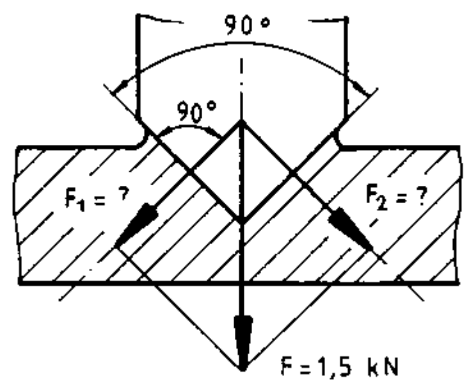

F_1 = [ ] kN ; F_2 = [ ] kN

(6)

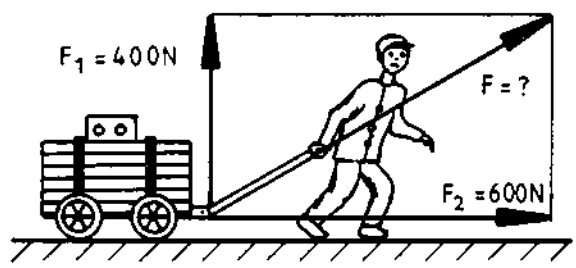

F = [ ] N

(7)

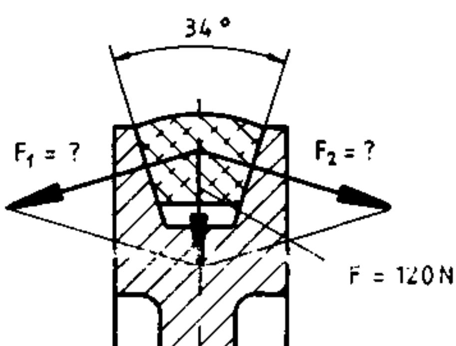

F_1 = [ ] N ; F_2 = [ ] N

(8)

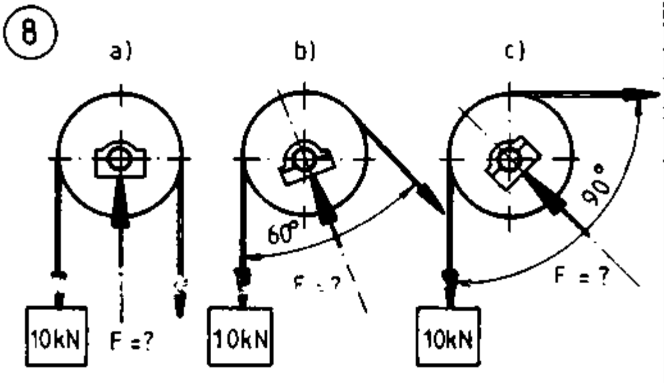

F = [ ] kN ; F = [ ] kN ; F = [ ] kN

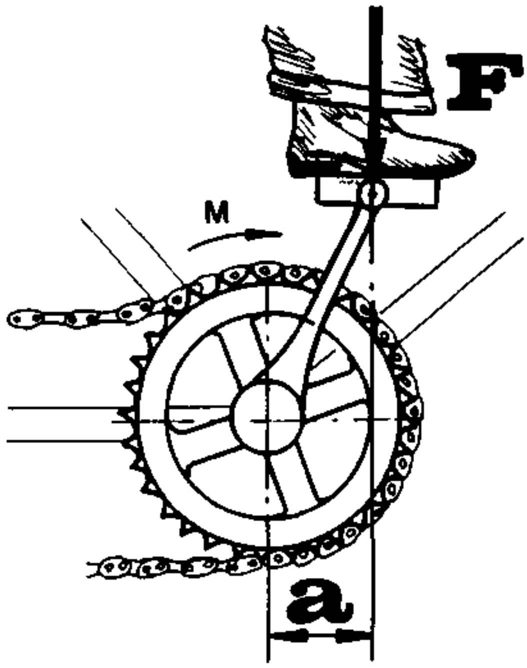

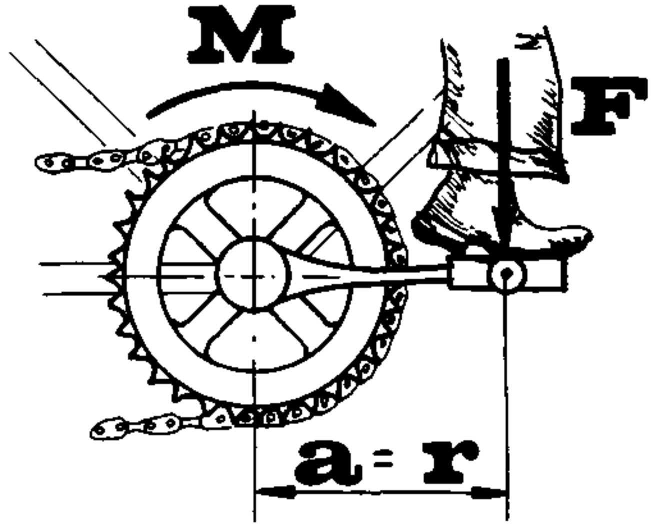

$$M = \quad \cdot$$

1.

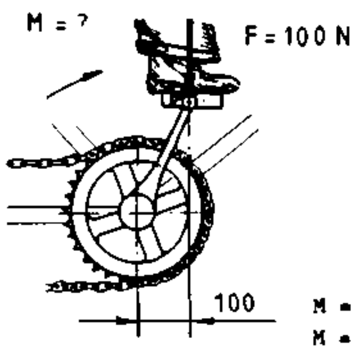

$M = F \cdot r$

$M = 100N \cdot 0{,}1m$

$\underline{\underline{M = 10Nm}}$

2.

F = ?

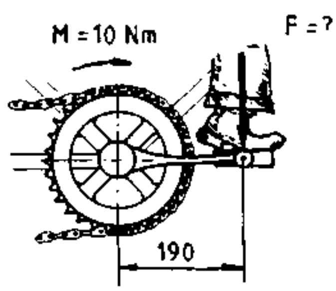

$M = F \cdot r$

$F = \frac{M}{r}$

$F = \frac{10Nm}{0{,}19m}$

$\underline{\underline{F = 52{,}6N}}$

Test :

a) M = ?

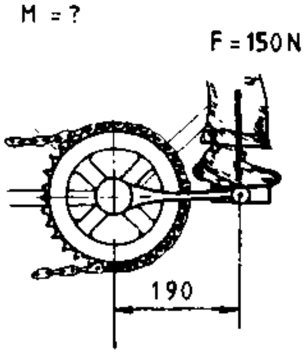

b) F = ?

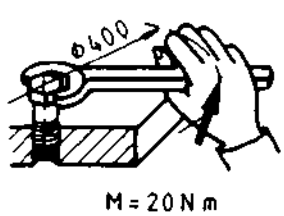

c) M = ?

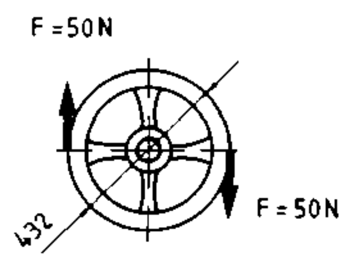

M = [ ] Nm	F = [ ] N	M = [ ] Nm

c) M = 21,6Nm   b) F = 100N   a) M = 28,5Nm

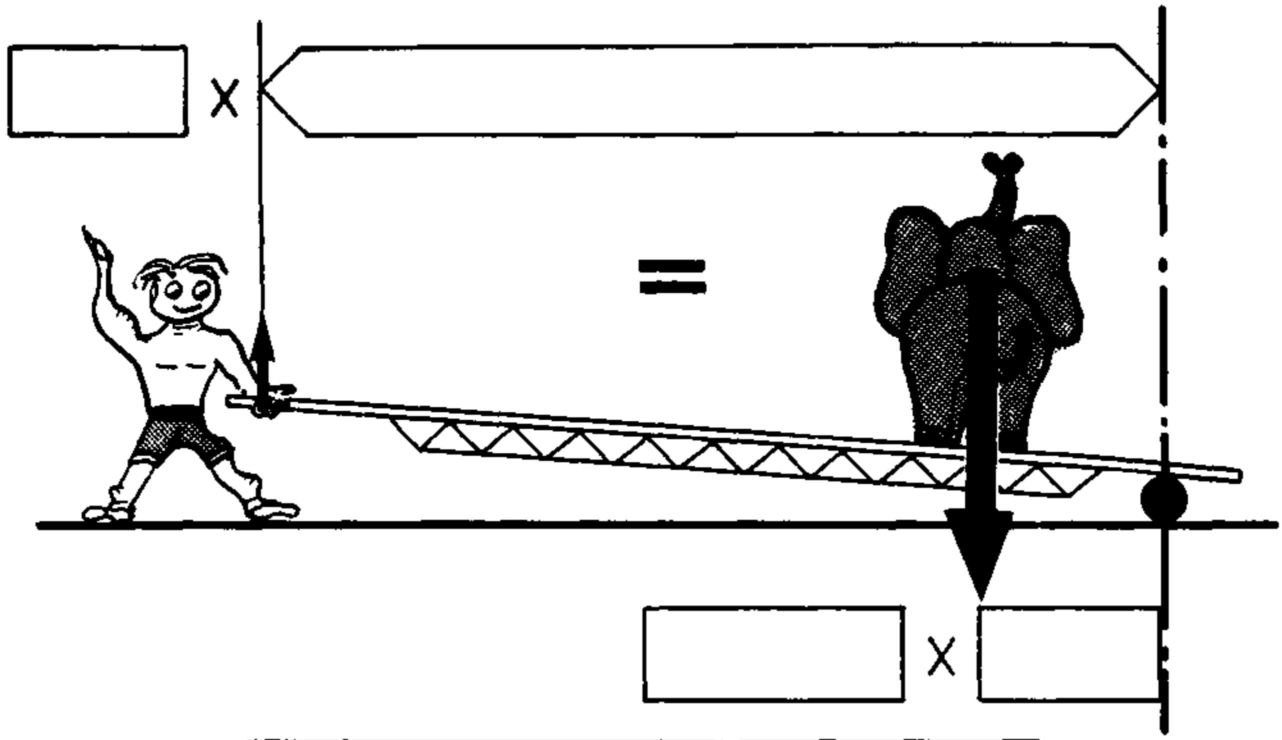

$$F_1 \cdot l_1 = \quad \cdot$$

1.

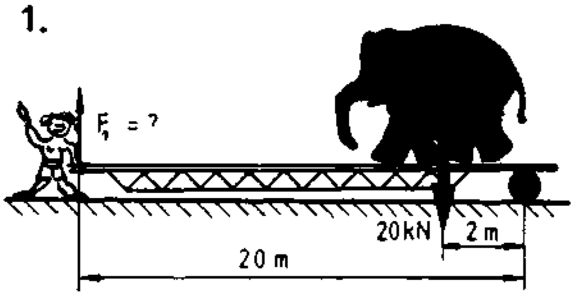

$F_1 \cdot l_1 = F_2 \cdot l_2$

$F_1 = \frac{F_2 \cdot l_2}{l_1}$

$F_1 = \frac{20000N \cdot 2\cancel{m}}{20\cancel{m}}$

$\underline{\underline{F_1 = 2000N}}$

2.

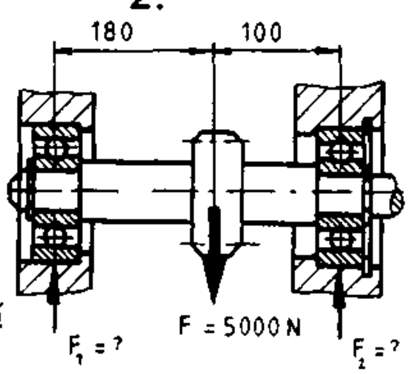

$F_1 \cdot l_1 = F \cdot l$

$F_1 = \frac{F \cdot l}{l_1}$

$F_1 = \frac{5000N \cdot 100\cancel{mm}}{280\cancel{mm}}$

$\underline{\underline{F_1 = 1786N}}$

$F_2 = F - F_1$

$F_2 = 5000N - 1786N$

$\underline{\underline{F_2 = 3214N}}$

Test

a)

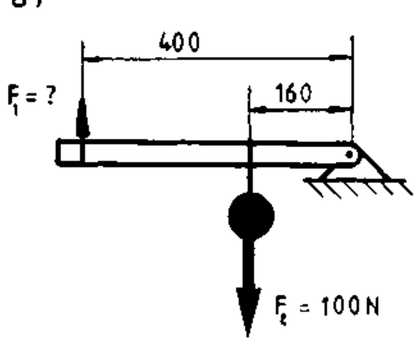

= [ ] N

b)

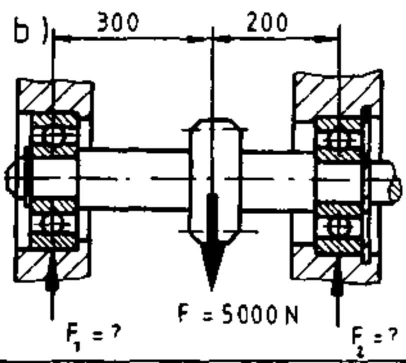

F_1 = [ ] N

F_2 = [ ] N

c)

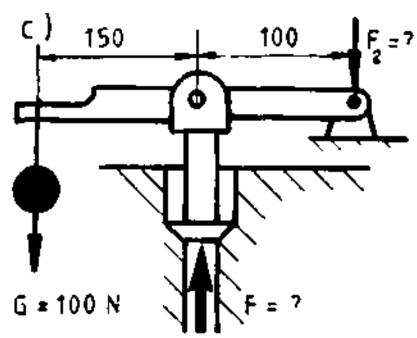

F = [ ] N

F_2 = [ ] N

a) $F_1 = 40N$ b) $F_2 = 3000N$ c) $F = 250N$, $F_2 = 150N$

(1)

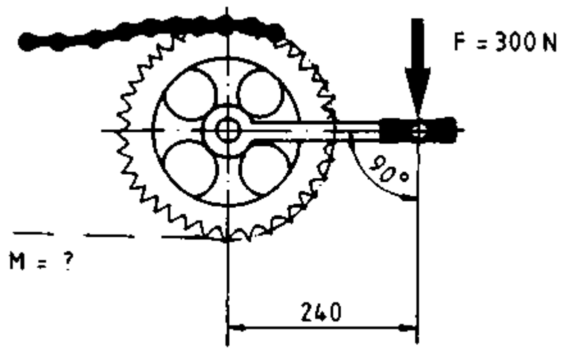

M = ☐ Nm

(2)

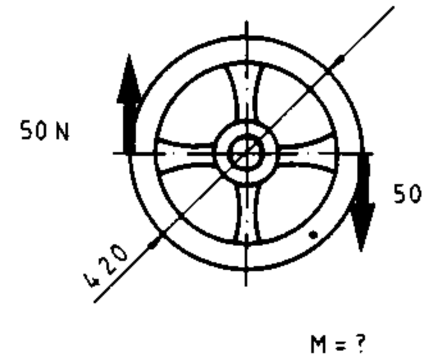

M = ☐ Nm

(3)

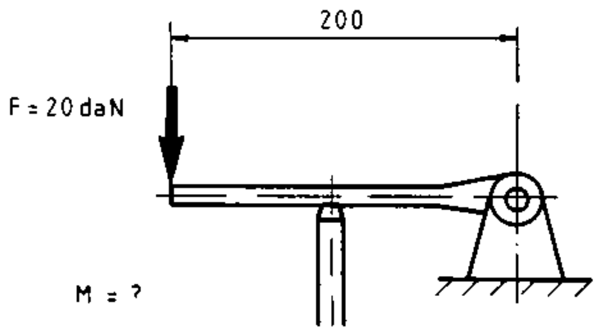

M = ☐ Nm

(4)

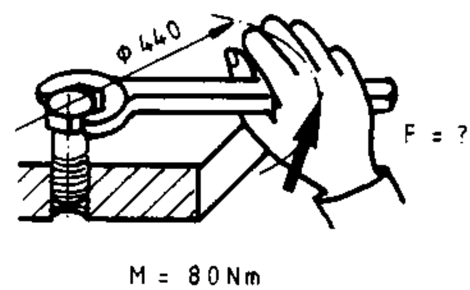

F = ☐ N

(5)

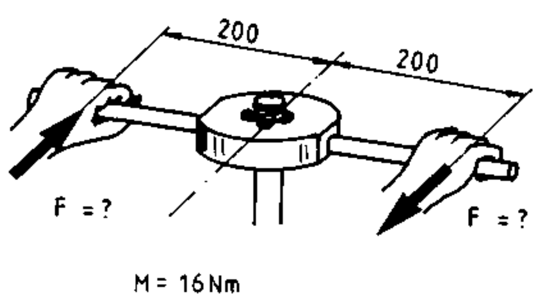

F = ☐ N

(6)

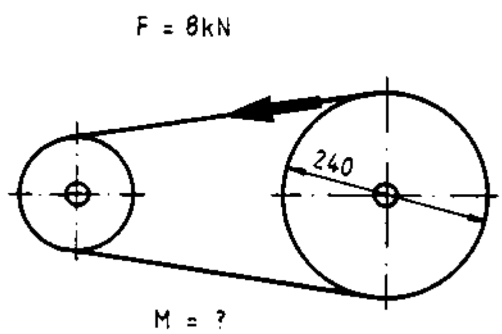

M = ☐ Nm

(7)

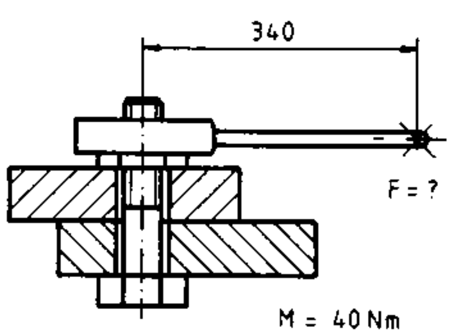

F = ☐ N

(8)

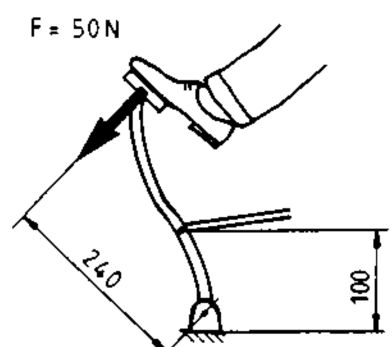

M = ☐ Nm

(1)

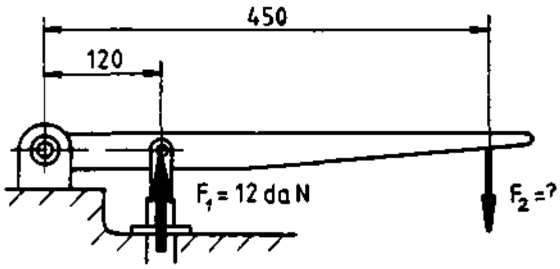

F_2 = ______ daN

(2)

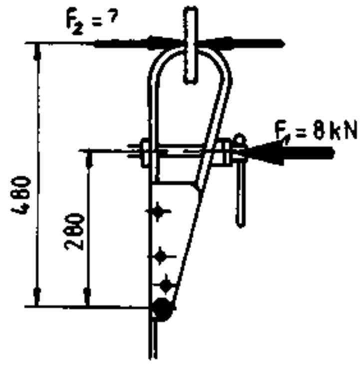

F_2 = ______ kN

(3)

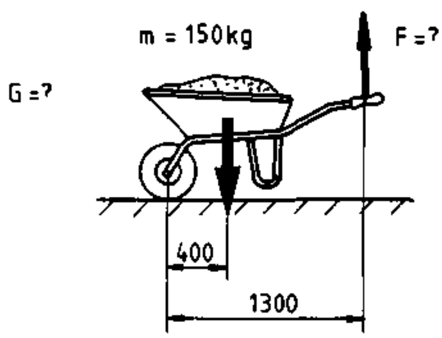

G = ______ N; F = ______ N

(4)

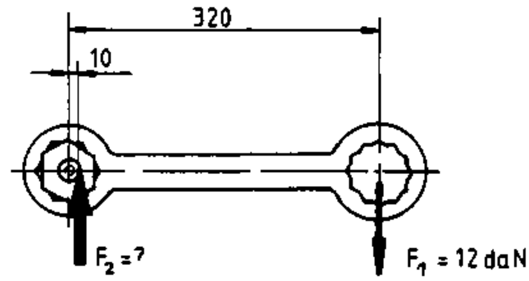

F_2 = ______ daN

(5)

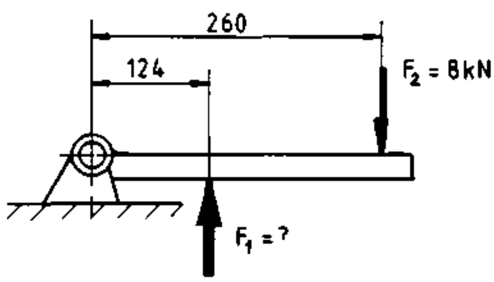

F_1 = ______ kN

(6)

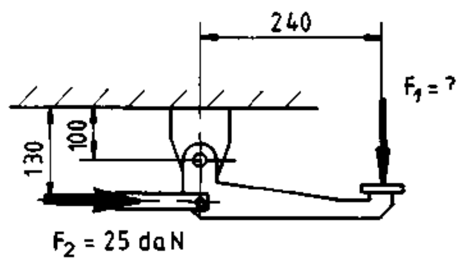

F_1 = ______ daN

(7)

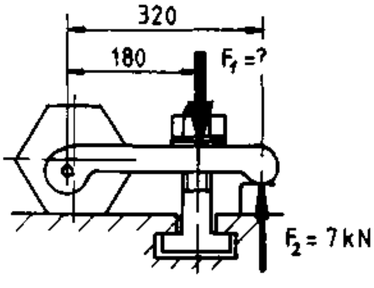

F_1 = ______ kN

(8)

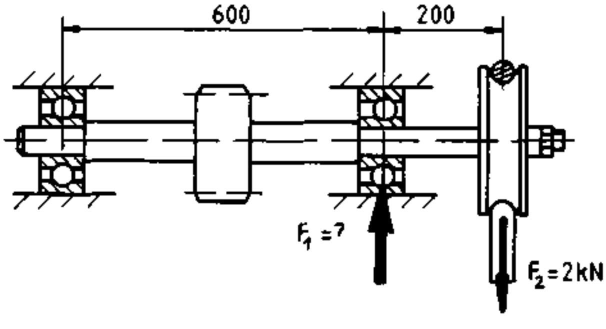

F_1 = ______ kN

(1)

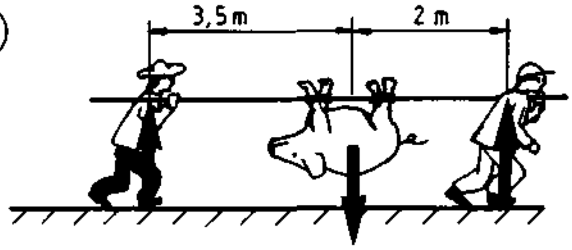

F_1 = ?   G = 120 daN F_2 = ?

F_1 = ______ daN; F_2 = ______ daN

(2)

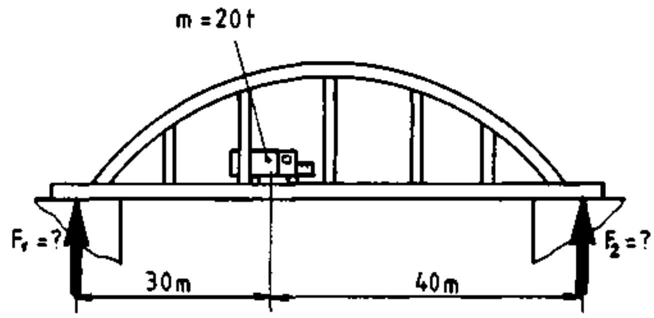

F_1 = ______ kN; F_2 = ______ kN

(3)

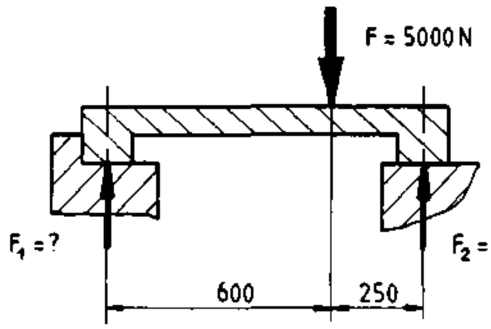

F_1 = ______ N; F_2 = ______ N

(4)

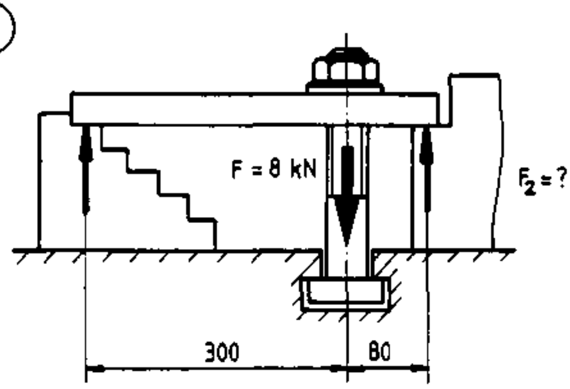

F_2 = ______ N

(5)

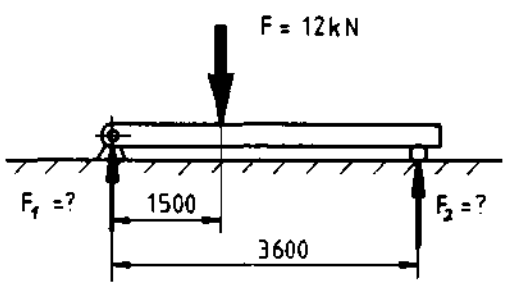

F_1 = ______ N; F_2 = ______ N

(6)

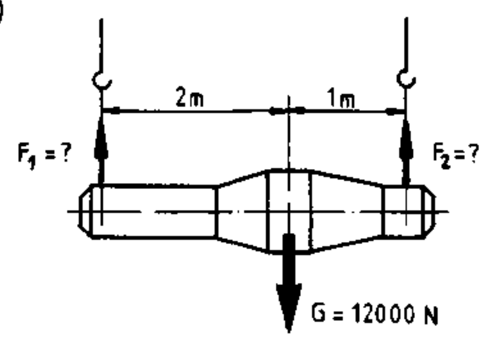

F_1 = ______ N; F_2 = ______ N

(7)

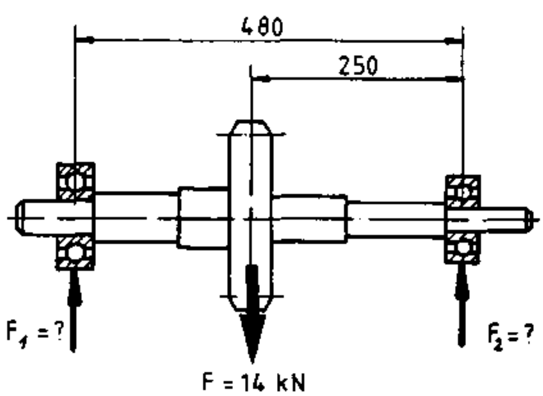

F_1 = ______ N; F_2 = ______ N

(8)

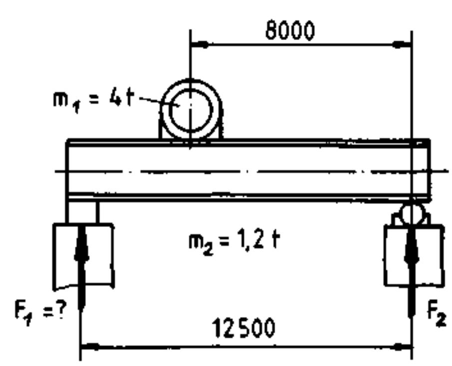

F_1 = ______ kN; F_2 = ______ kN

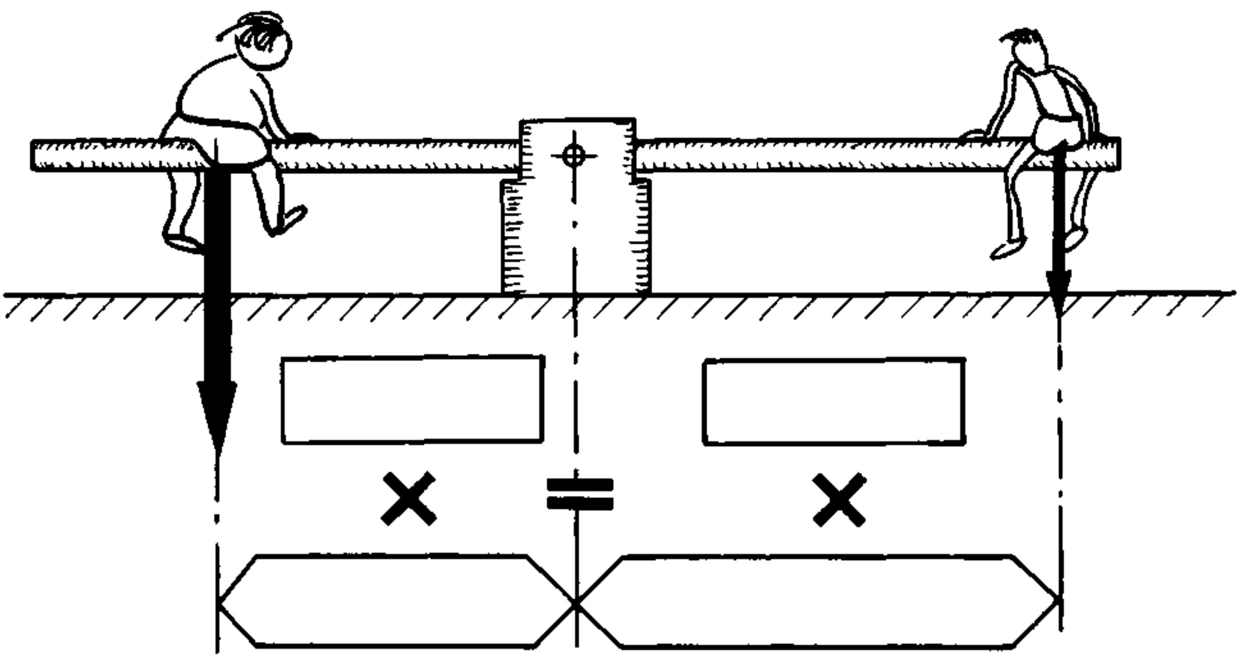

× = ×

× = ×

$F_1 \cdot l_1 = \quad \cdot$

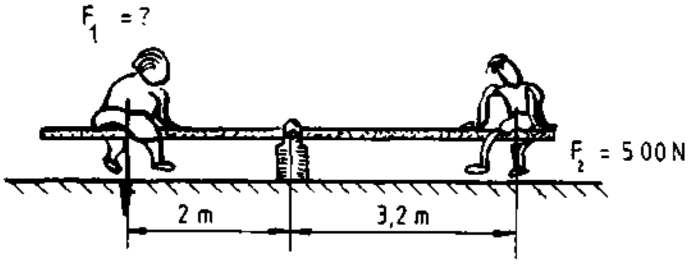

$F_1 \cdot 2m = F_2 \cdot 3{,}2m$

$F_1 = \frac{F_2 \cdot 3{,}2m}{2m}$

$F_1 = \frac{500N \cdot 3{,}2}{2}$

$F_1 = 800N$

Test:

a)

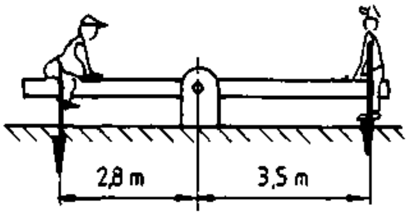

F_1 = ☐ N

b)

F_1 = 1000 N　　F_2 = ?

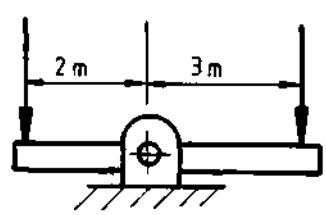

F_2 = ☐ N

c)

F_1 = ?　　F_2 = 100N

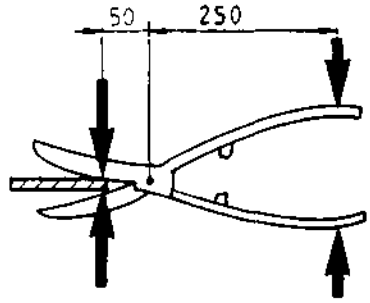

F_1 = ☐ N

c) F_1 = 500N　　b) F_2 = 669 N　　a) F_1 = 600N

(1)

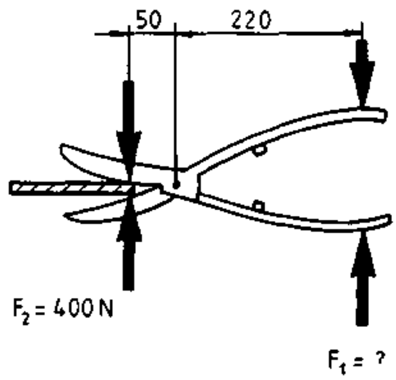

F_1 = ☐ N

(2)

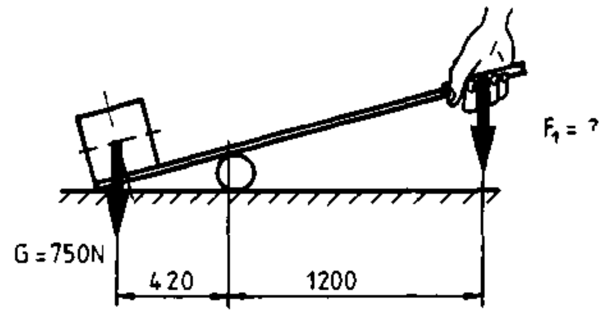

F_1 = ☐ N

(3)

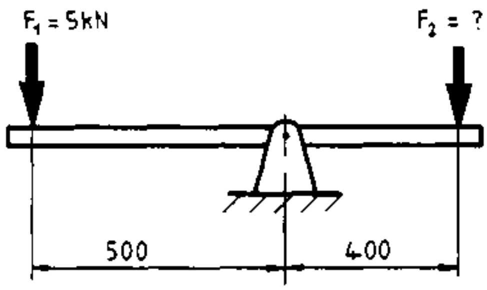

F_2 = ☐ kN

(4)

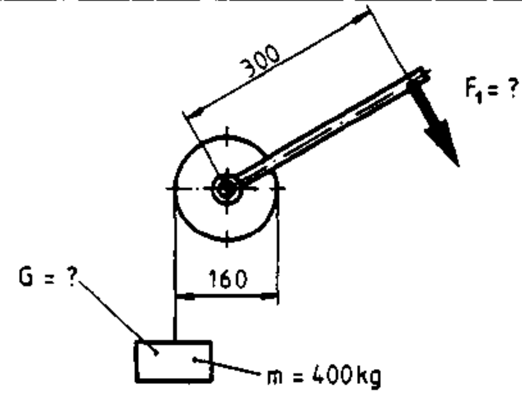

G = ☐ N ; F_1 = ☐ N

(5)

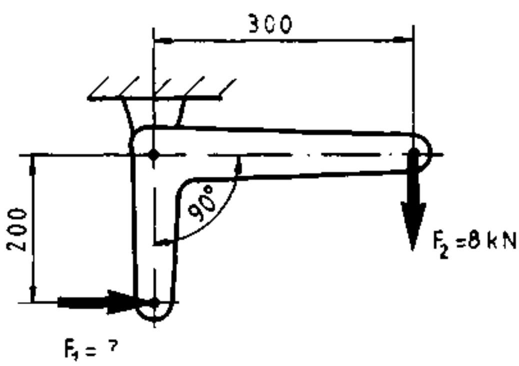

F_1 = ☐ kN

(6)

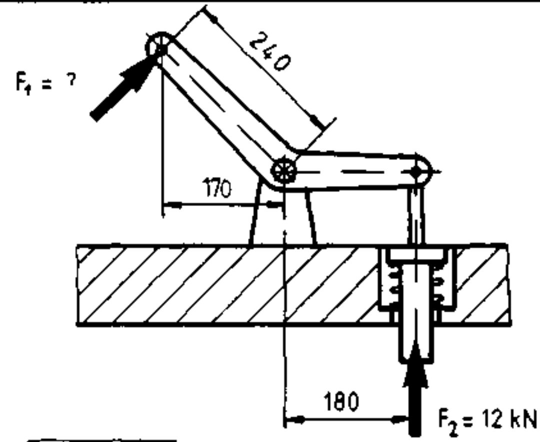

F_1 = ☐ kN

(7)

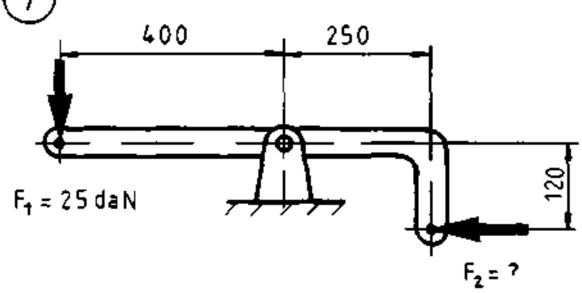

F_2 = ☐ daN

(8)

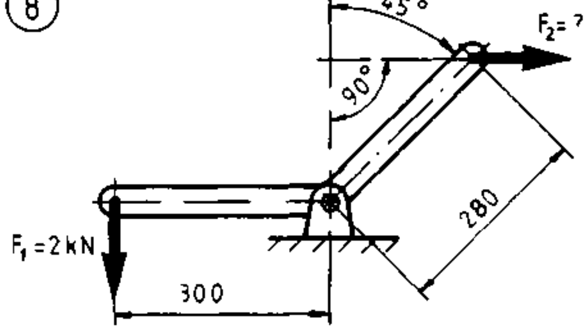

F_2 = ☐ kN

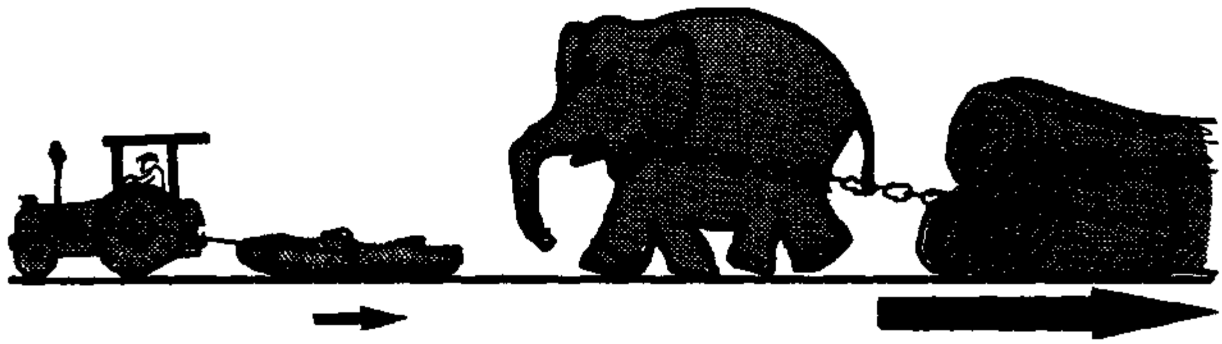

$F \sim G$

$\boxed{F = \quad \cdot \quad}$

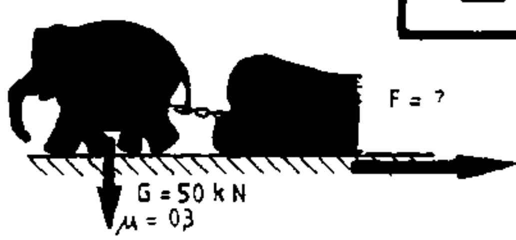

$F = \mu \cdot G$

$F = 0,3 \cdot 2000N$

$\underline{\underline{F = 600N}}$

Test

a)

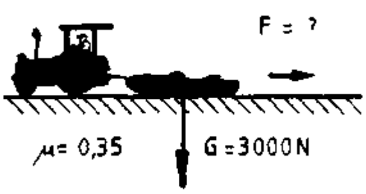

$F = \boxed{\quad}$ N

b)

$F = \boxed{\quad}$ N

c)

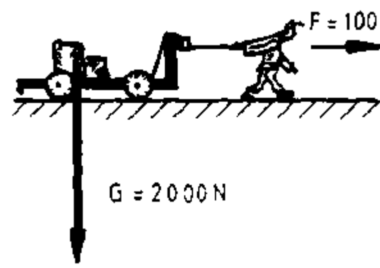

$\mu = \boxed{\quad}$

a) F = 1050N
b) F = 200N
c) μ = 0,05

(1)

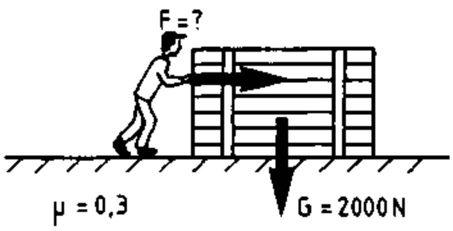

$F =$ ______ N

(2)

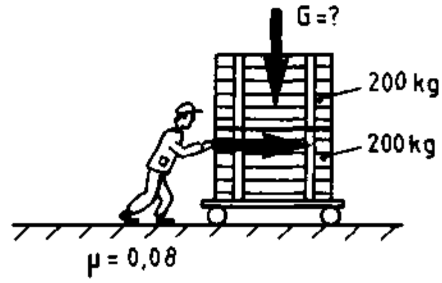

$G =$ ______ N; $F =$ ______ N

(3)

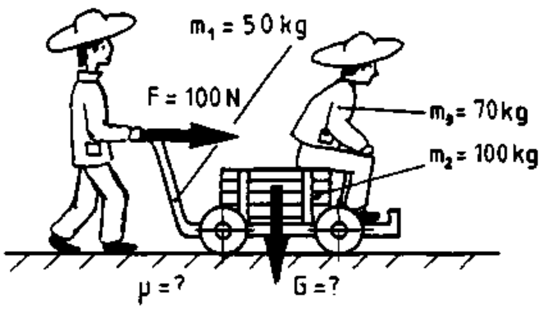

$G =$ ______ N; $\mu =$ ______

(4)

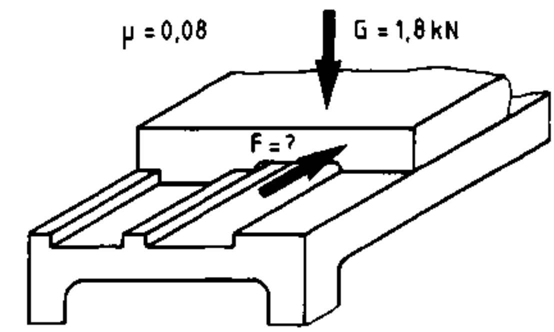

$F =$ ______ kN

(5)

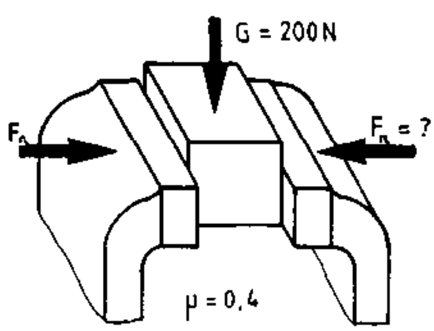

$F_n =$ ______ N

(6)

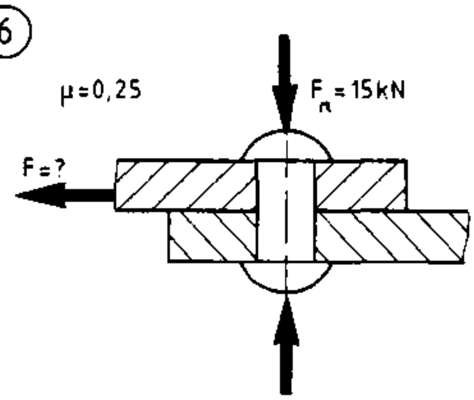

$F =$ ______ kN

(7)

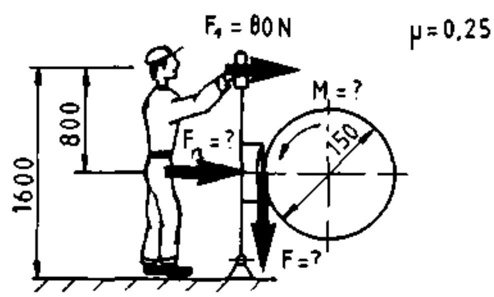

$F_n =$ ______ N

$F =$ ______ N; $M =$ ______ Nm

(8)

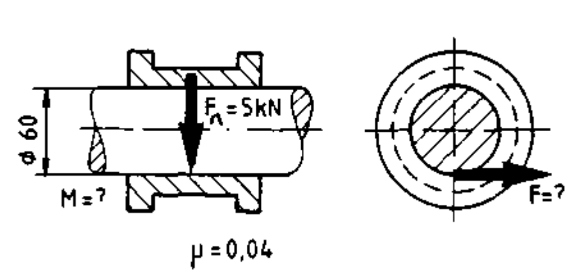

$F =$ ______ kN; $M =$ ______ Nm

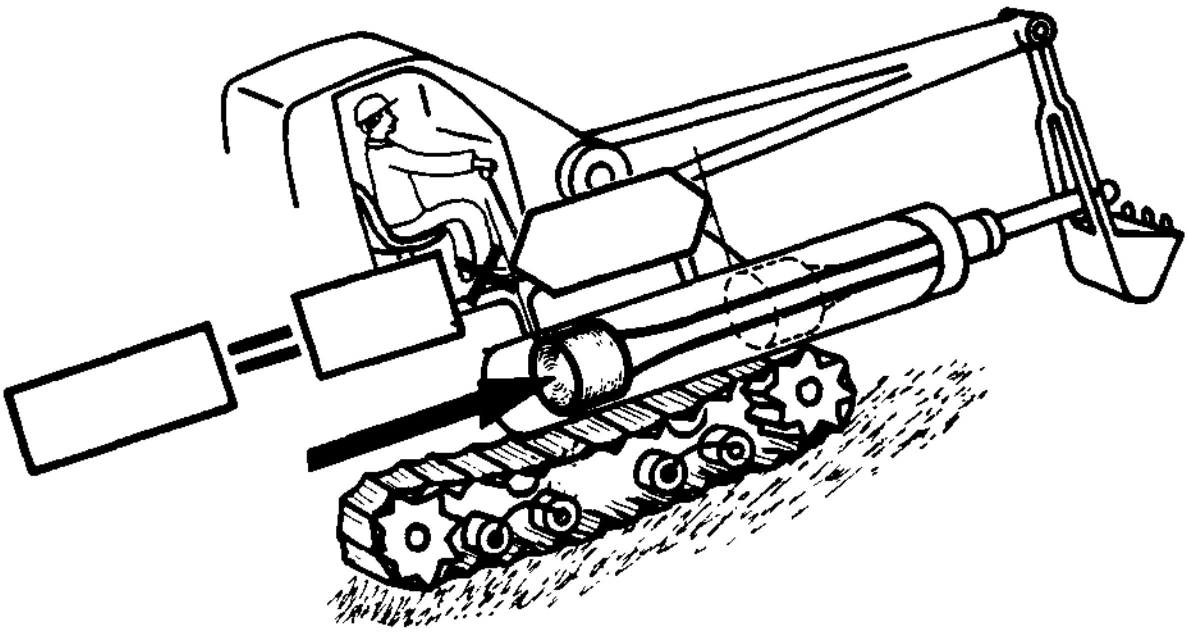

= ×

W = ·

1.

W = ?

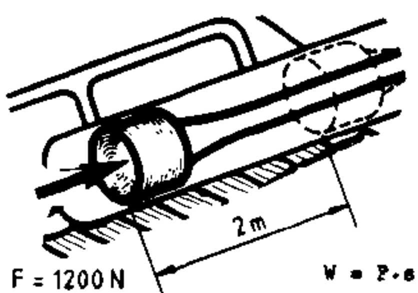

$W = F \cdot s$

$W = 1200N \cdot 2m$

$\underline{\underline{W = 2400Nm = 2400J}}$

2.

W = ?

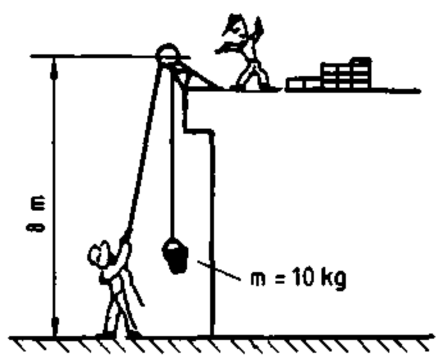

$W = G \cdot h$

$W = 100N \cdot 8m$

$\underline{\underline{W = 800J}}$

Test:

a) W = ?

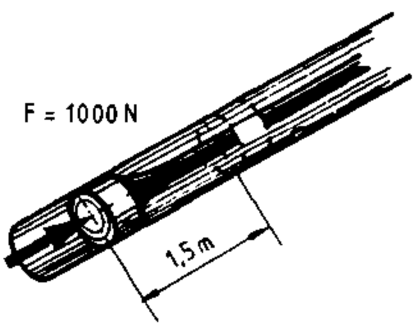

W = ☐ J

b) W = ?

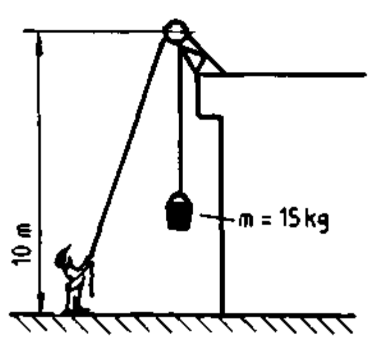

W = ☐ J

c) W = ?

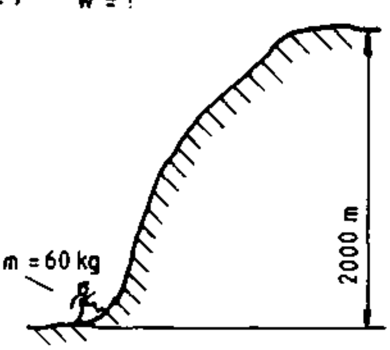

W = ☐ kJ

a) W = 1500J b) W = 1500J c) W = 1200kJ

29.2

(1)

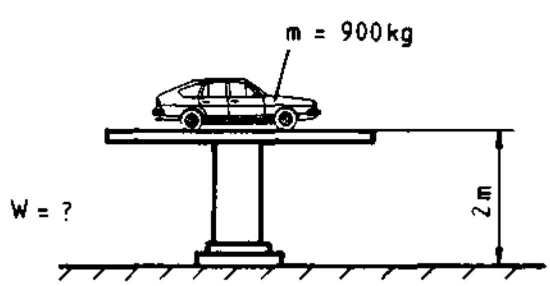

W = ☐ J

(2)

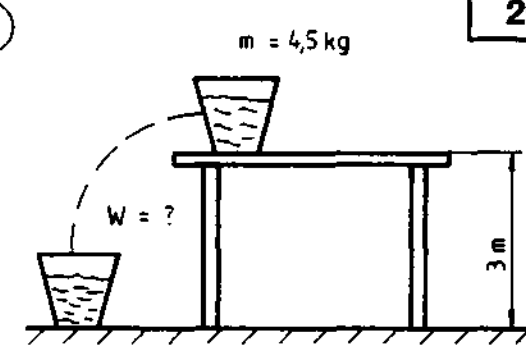

W = ☐ J

(3)

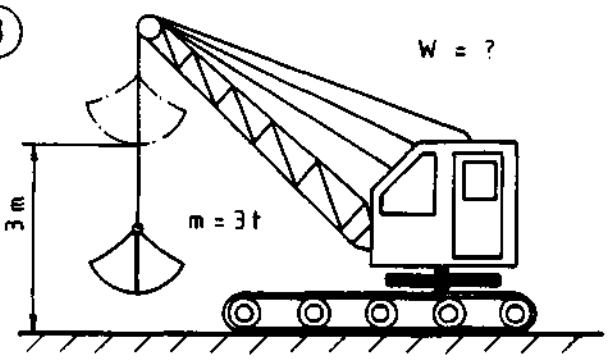

W = ☐ kJ

(4)

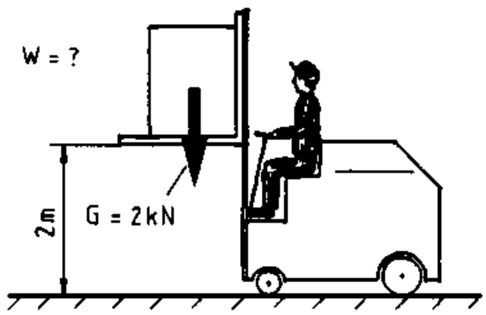

W = ☐ J

(5)

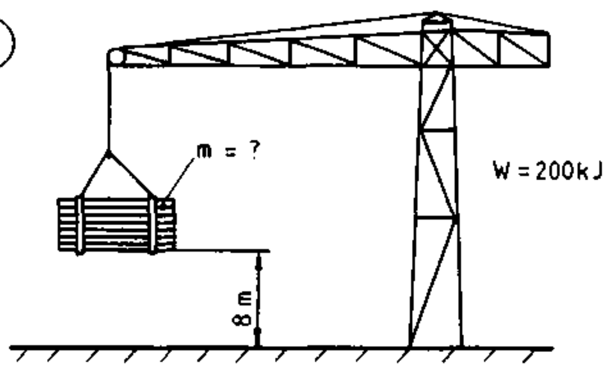

m = ☐ t

(6)

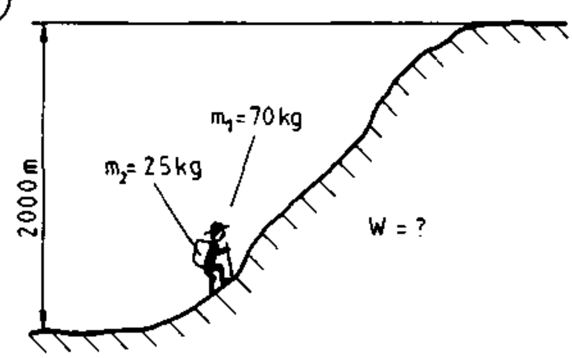

W = ☐ kJ

(7)

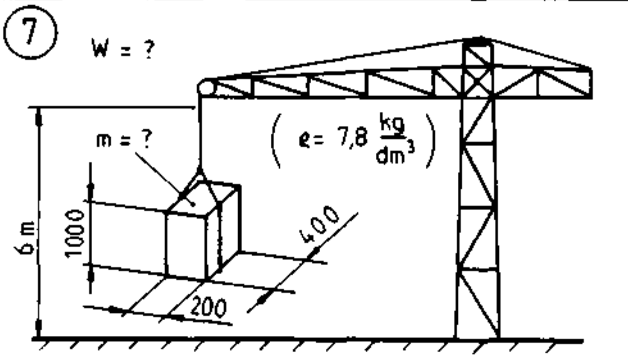

m = ☐ t ; W = ☐ kJ

(8)

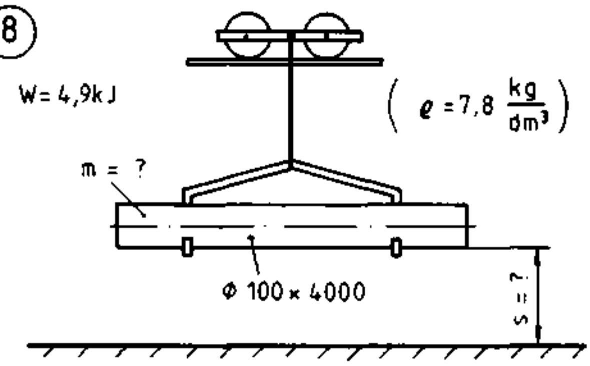

m = ☐ t ; s = ☐ m

(9)

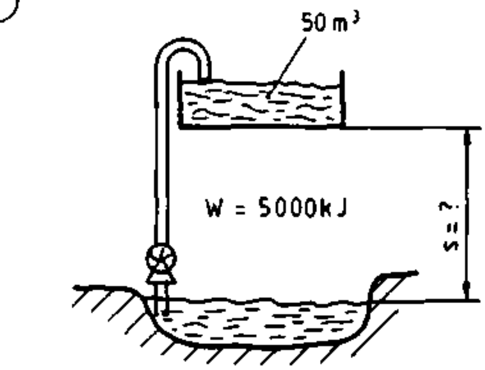

s = ______ m

(10)

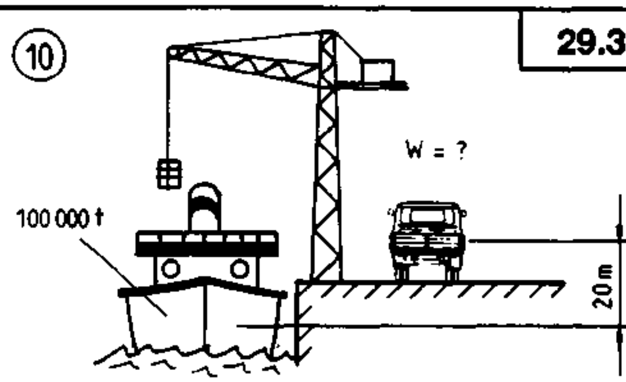

W = ______ kJ

(11)

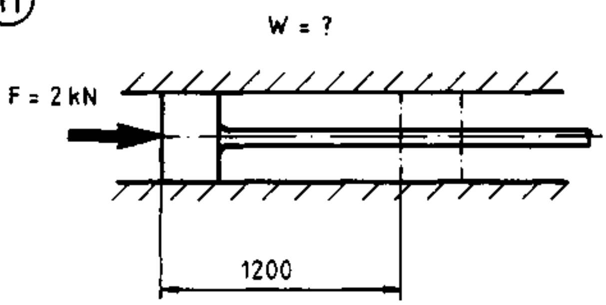

W = ______ kJ

(12)

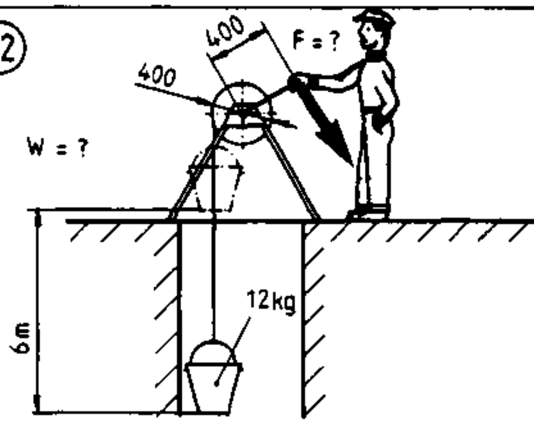

F = ______ N W = ______ J

(13)

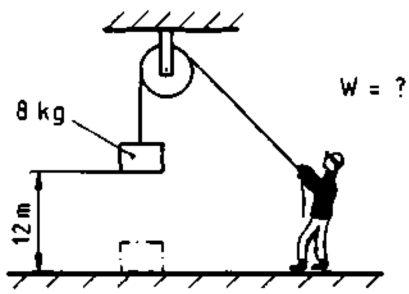

W = ______ J

(14)

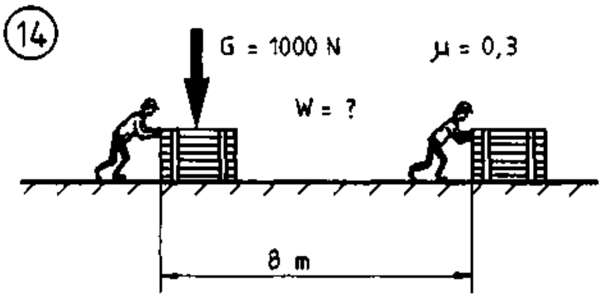

W = ______ kJ

(15)

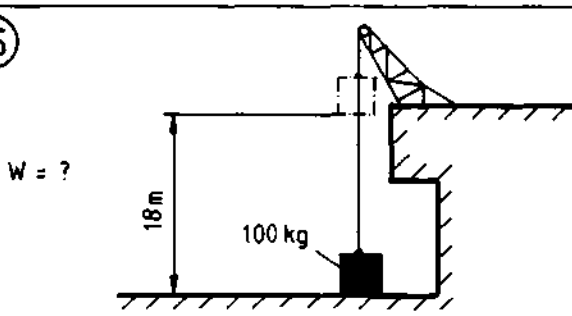

W = ______ kJ

(16)

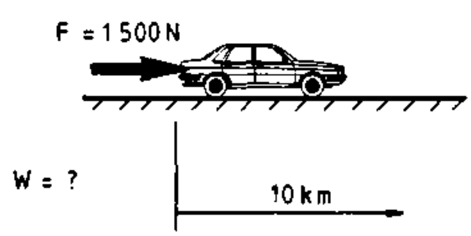

W = ______ kJ

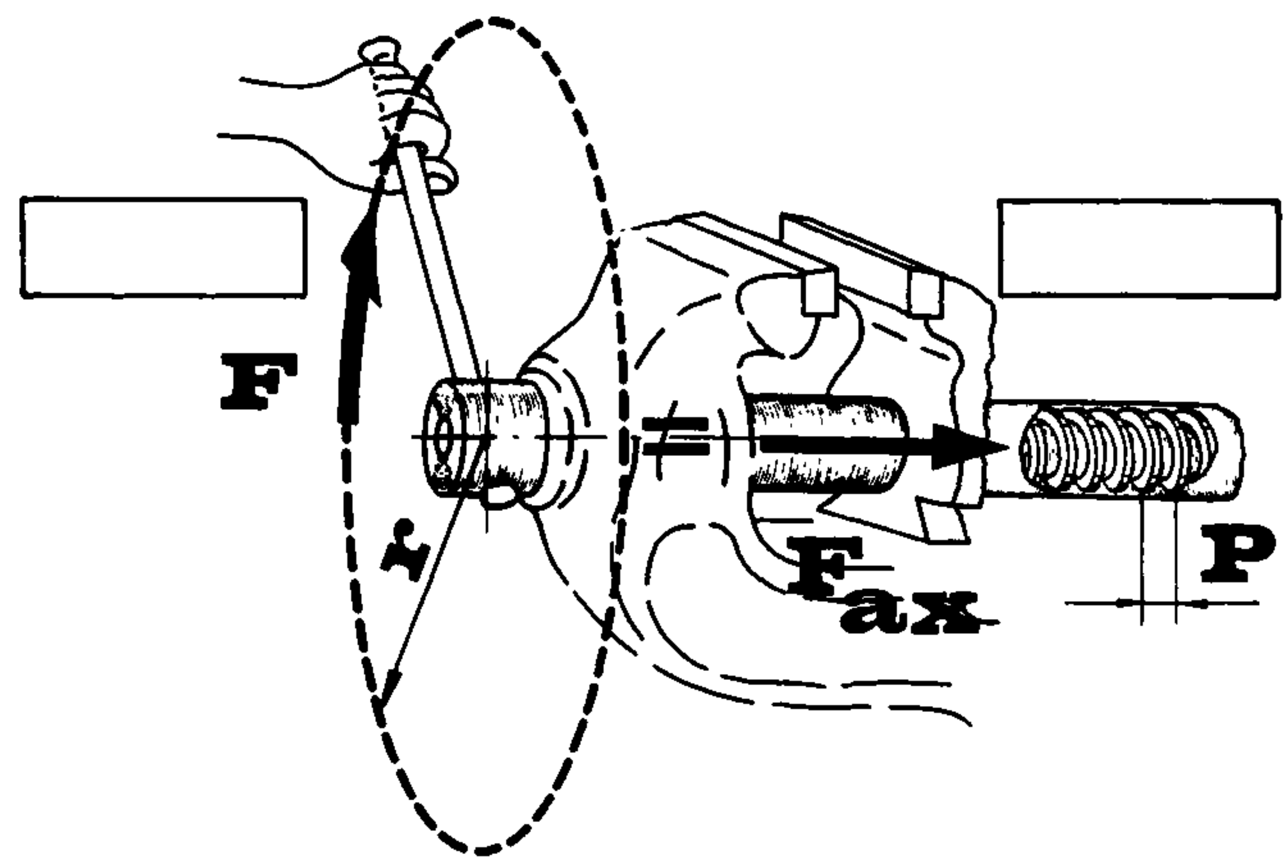

1. $$\boxed{F \cdot 2\pi r = \quad \cdot \quad}$$ 2.

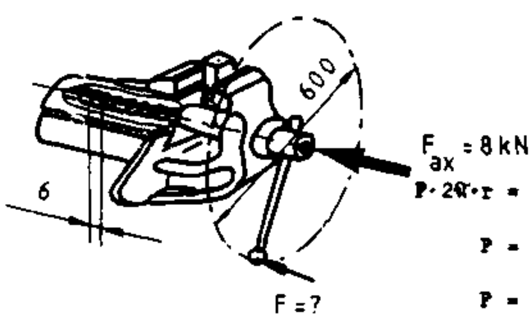

$F \cdot 2\pi \cdot r = F_{ax} \cdot P$

$F = \dfrac{F_{ax} \cdot P}{2\pi \cdot r}$

$F = \dfrac{8000N \cdot 6mm}{2\pi \cdot 300mm}$

$\underline{\underline{F = 25,5N}}$

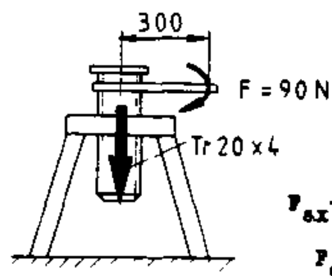

$F_{ax} = ?$

$F_{ax} \cdot P = F \cdot 2\pi r$

$F_{ax} = \dfrac{F \cdot 2\pi r}{P}$

$F_{ax} = \dfrac{90N \cdot 2 \cdot \pi \cdot 300mm}{4mm}$

$\underline{\underline{F_{ax} = 42390N}}$

Test

a)

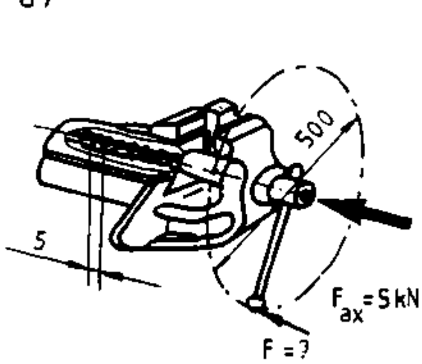

b)

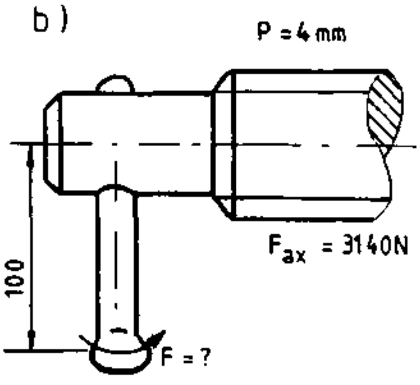

c)

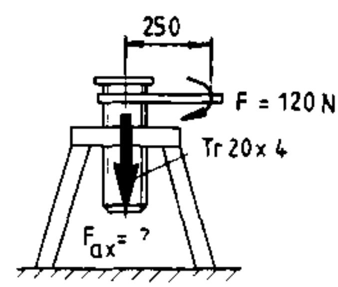

$F =$ ☐ N	$F =$ ☐ N	$F_{ax} =$ ☐ N

c) $F_{ax} = 47100N$ b) $F = 20N$ a) $F = 16N$

(1)

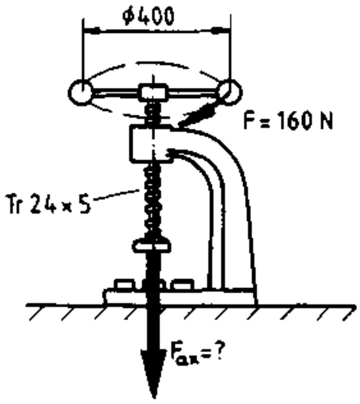

$F_{ax} =$ N

(2)

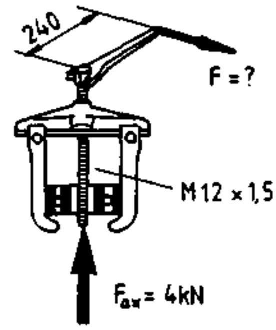

$F =$ N

(3)

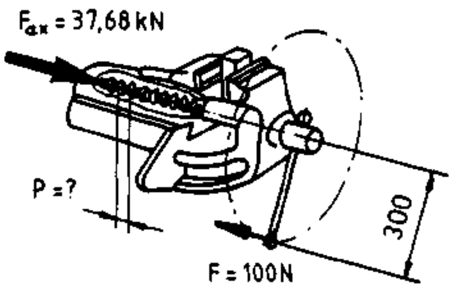

$P =$ mm

(4)

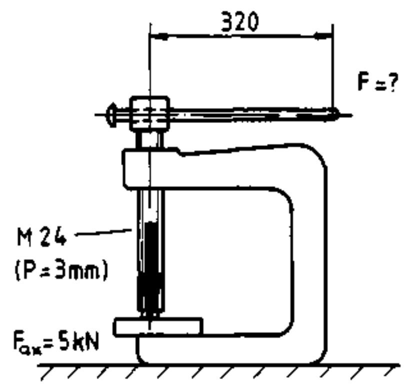

$F =$ N

(5)

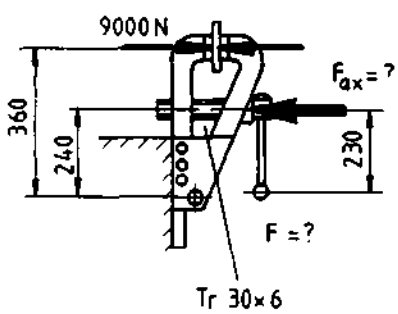

$F_{ax} =$ N; $F =$ N

(6)

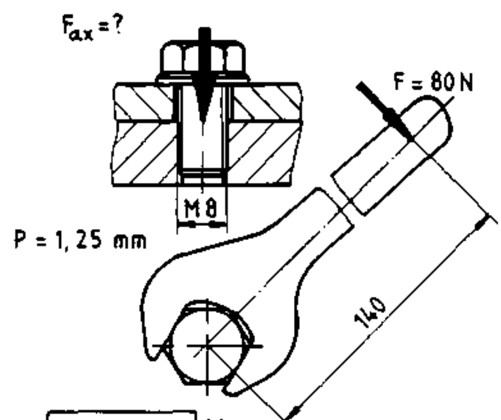

$F_{ax} =$ N

(7)

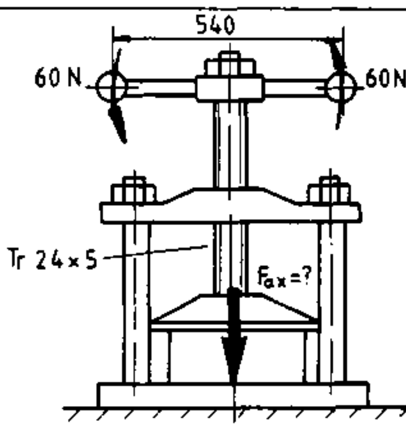

$F_{ax} =$ N

(8)

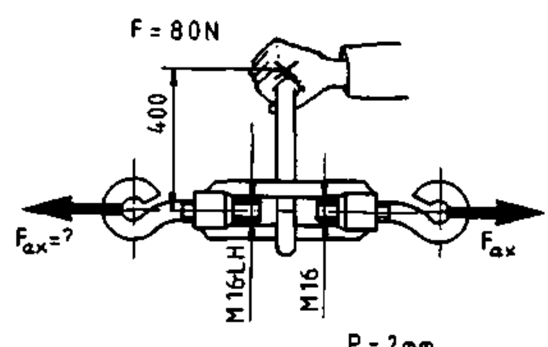

$F_{ax} =$ N

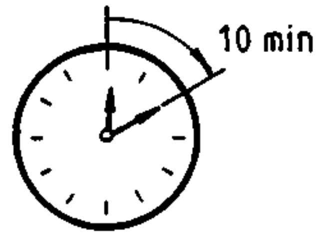

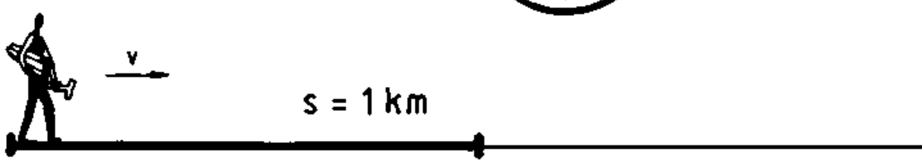

v = $\frac{km}{h}$

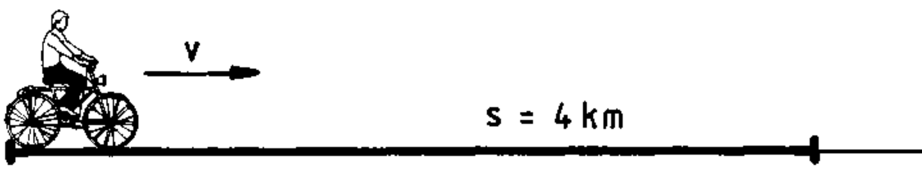

v = $\frac{km}{h}$

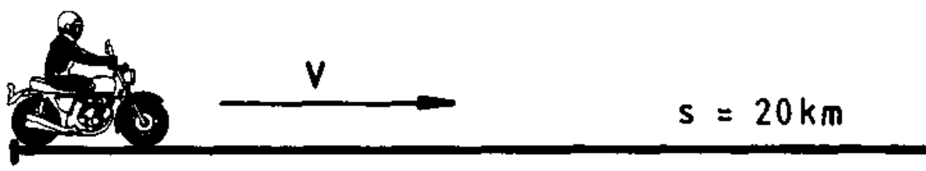

v = $\frac{km}{h}$

1.

v = ——

2.

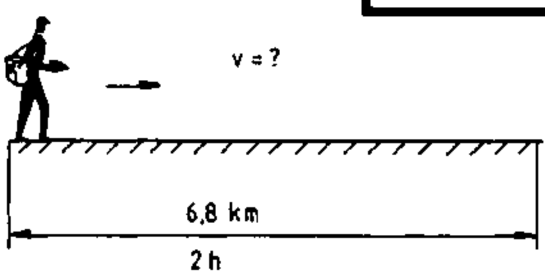

$v = \frac{s}{t}$

$v = \frac{6{,}8\,km}{2\,h}$

$\underline{v = 3{,}4\,\frac{km}{h}}$

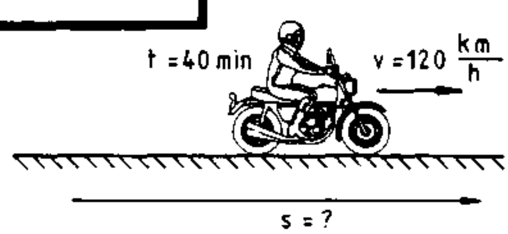

$v = \frac{s}{t}$

$s = v \cdot t$

$s = 120\,\frac{km}{h} \cdot 40 \cdot \frac{1}{60}\,h$ $\quad \underline{s = 80\,km}$

Test :

a) v = ?

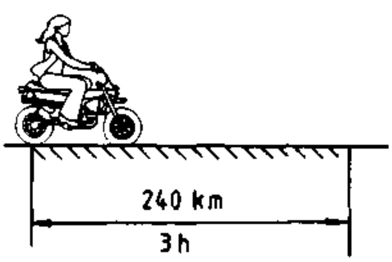

v = ☐ $\frac{km}{h}$

b)

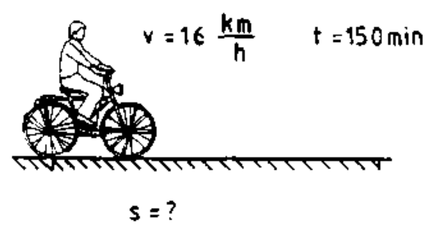

s = ☐ km

c) v = ?

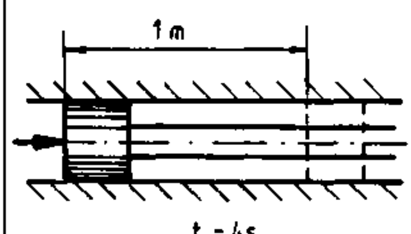

v = ☐ $\frac{m}{s}$

v = ☐ $\frac{m}{min}$

c) $v = 0{,}25\frac{m}{s} = 15\frac{m}{min}$ b) s = 40 km a) $v = 80\frac{km}{h}$

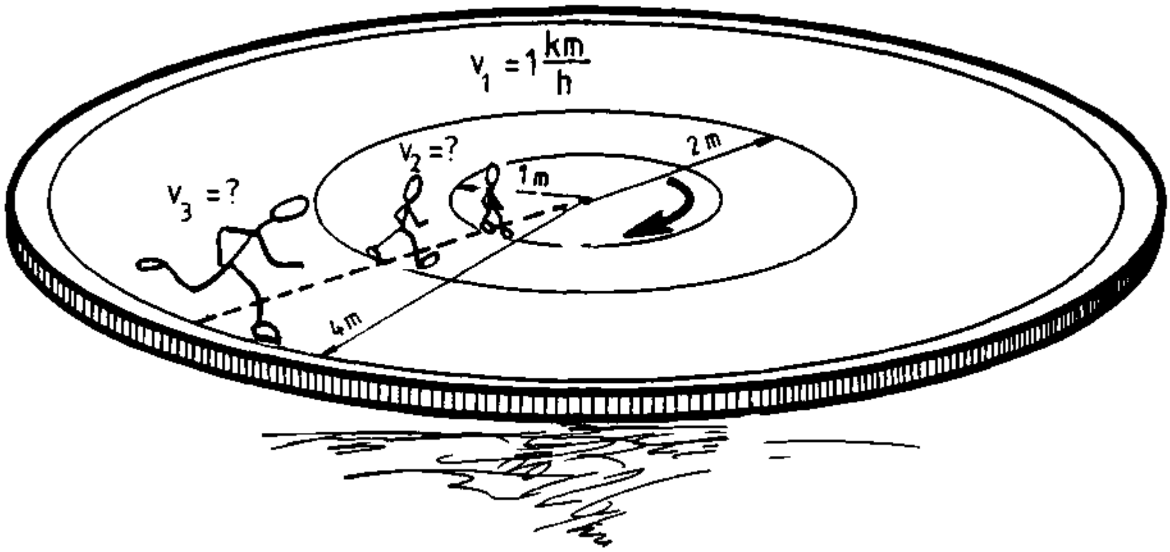

$$\mathbf{v_3} = \frac{\mathbf{km}}{\mathbf{h}} \qquad \mathbf{v_2} = \frac{\mathbf{km}}{\mathbf{h}}$$

Test

a)	b)	c)
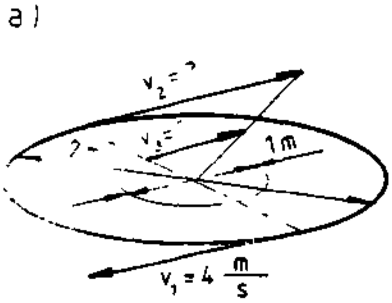	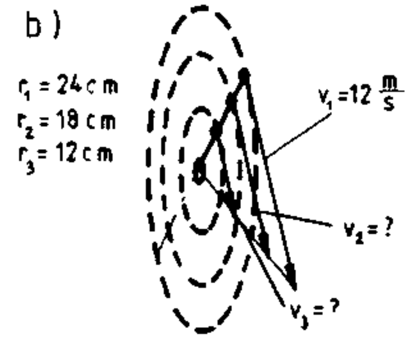	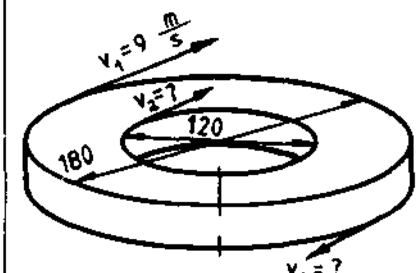
v_2 = ☐ $\frac{m}{s}$	v_2 = ☐ $\frac{m}{s}$	v_2 = ☐ $\frac{m}{s}$
v_3 = ☐ $\frac{m}{s}$	v_3 = ☐ $\frac{m}{s}$	v_3 = ☐ $\frac{m}{s}$

a) $v_2 = 4 \frac{m}{s}$, $v_3 = 2 \frac{m}{s}$ b) $v_2 = 9 \frac{m}{s}$, $v_3 = 6 \frac{m}{s}$ c) $v_2 = 6 \frac{m}{s}$, $v_3 = 9$ m/s

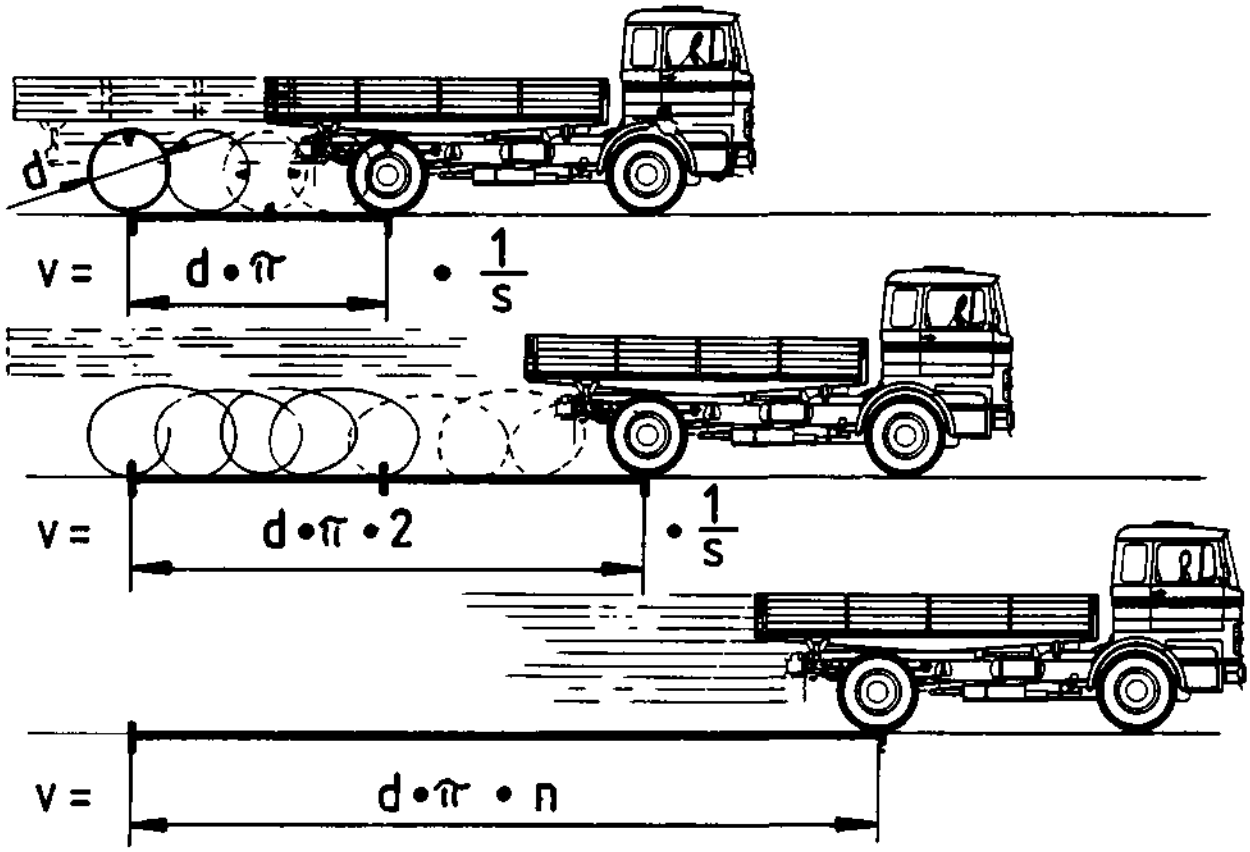

$$\mathbf{v} = \quad \cdot \quad \cdot$$

1.

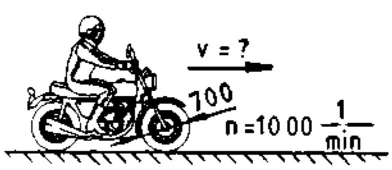

$v = d \cdot \pi \cdot n$

$v = 0{,}7\,m \cdot 3{,}14 \cdot 1000 \frac{1}{min}$

Test: $v = 2198 \frac{m}{min}$

$v = 2{,}198 \cdot 60 \frac{km}{h}$

$\underline{\underline{v = 132 \frac{km}{h}}}$

2.

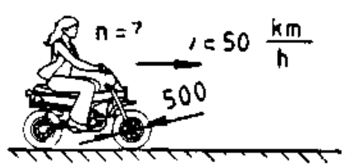

$v = 50 \frac{km}{h} = 833 \frac{m}{min}$

$v = d \cdot \pi \cdot n$

$n = \frac{v}{d \cdot \pi}$

$n = \frac{833\,m}{min \cdot 0{,}5\,m \cdot 3{,}14}$

$\underline{\underline{n = 530 \frac{1}{min}}}$

a)

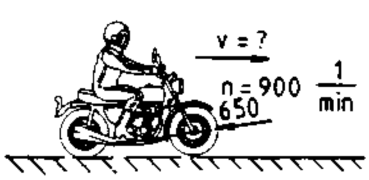

$v = \boxed{} \frac{km}{h}$

b)

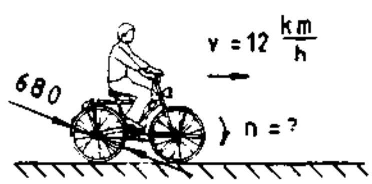

$n = \boxed{} \frac{1}{min}$

c)

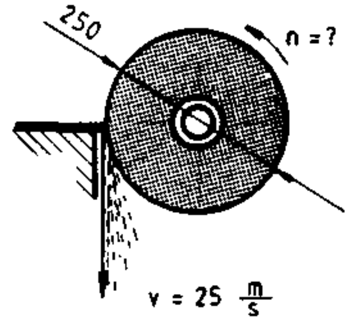

$n = \boxed{} \frac{1}{min}$

a) $v = 110 \frac{km}{h}$ b) $n = 94 \frac{1}{min}$ c) $n = 1911 \frac{1}{min}$

(1)

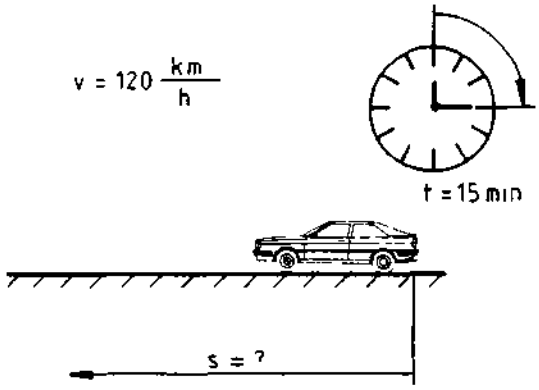

s = ______ km

(2)

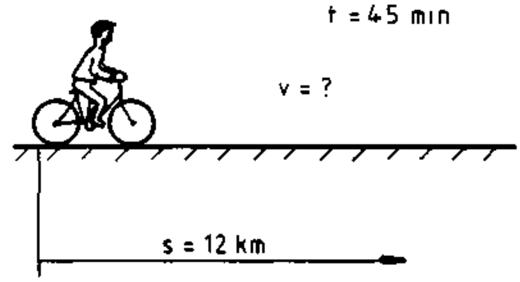

v = ______ $\frac{km}{h}$; v = ______ $\frac{m}{s}$

(3)

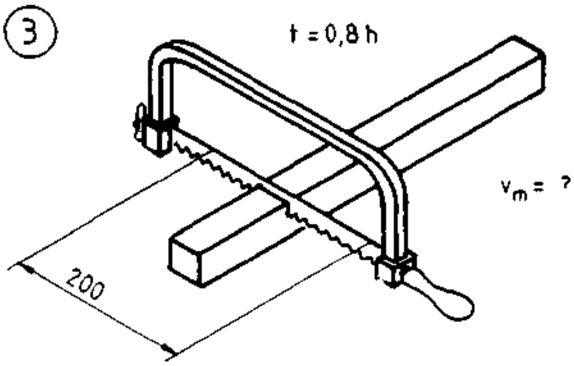

v_m = ______ $\frac{m}{s}$; v_m = ______ $\frac{m}{min}$

(4)

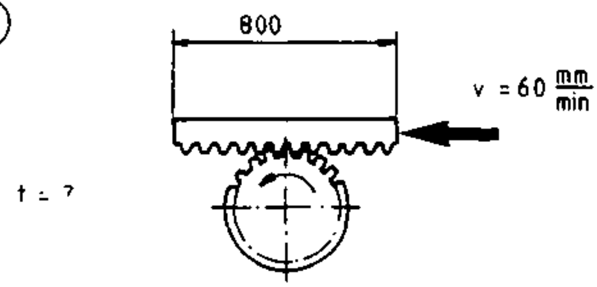

t = ______ min

(5)

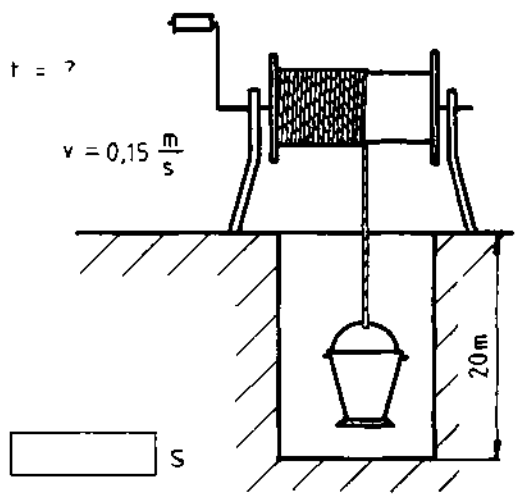

t = ______ s

(6)

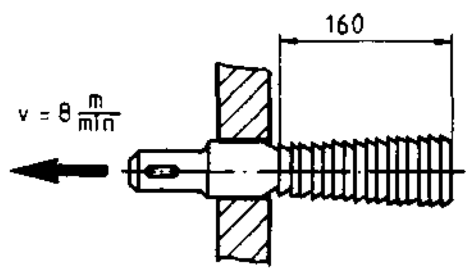

t = ______ s

(7)

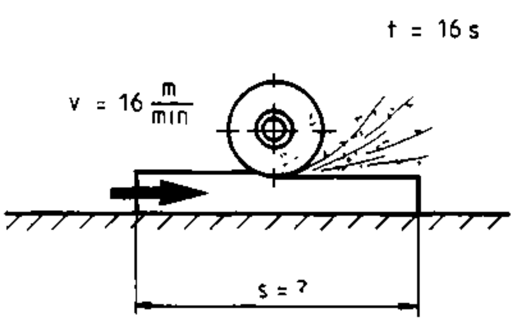

s = ______ m

(8)

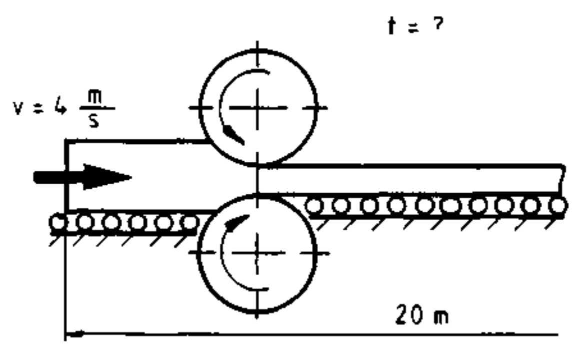

t = ______ s

(1)

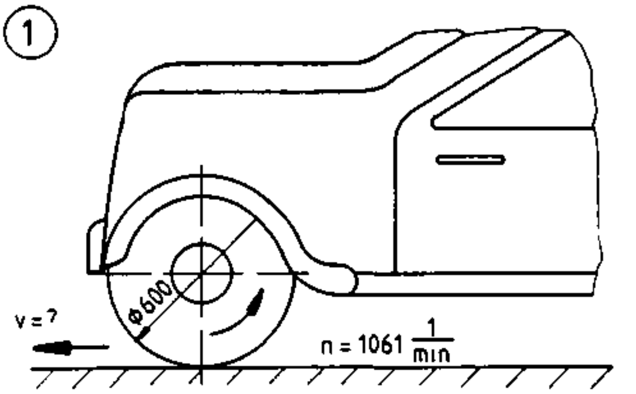

$v =$ ☐ $\frac{m}{s}$, $v =$ ☐ $\frac{km}{h}$

(2)

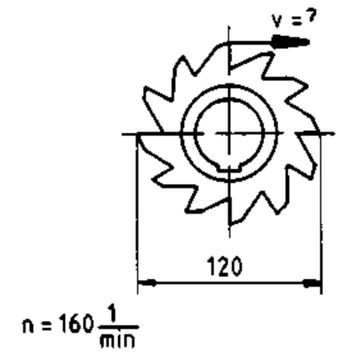

$v =$ ☐ $\frac{m}{min}$, $v =$ ☐ $\frac{m}{s}$

(3)

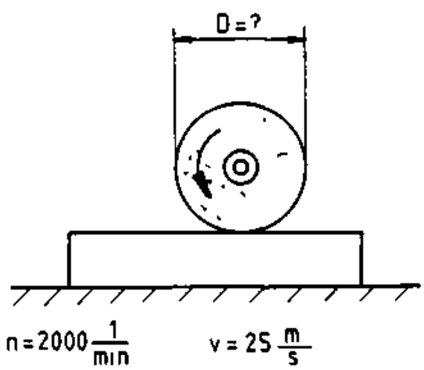

$D =$ ☐ mm

(4)

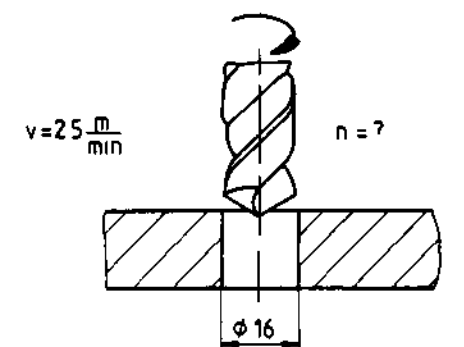

n 700, 438, 273, 171, 107, 67, 42, 26 $\frac{1}{min}$

$n =$ ☐ $\frac{1}{min}$,

(5)

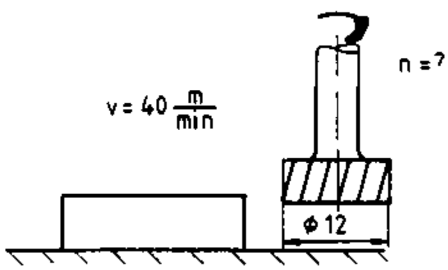

$n =$ ☐ $\frac{1}{min}$

(6)

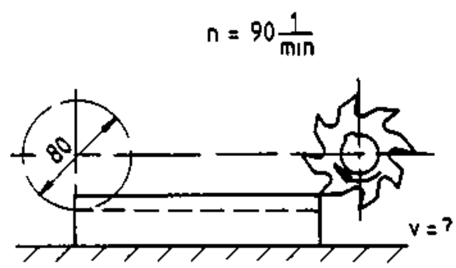

$v =$ ☐ $\frac{m}{min}$

(7)

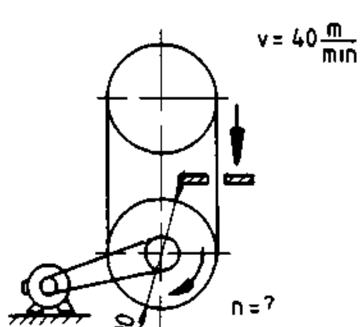

$n =$ ☐ $\frac{1}{min}$

(8)

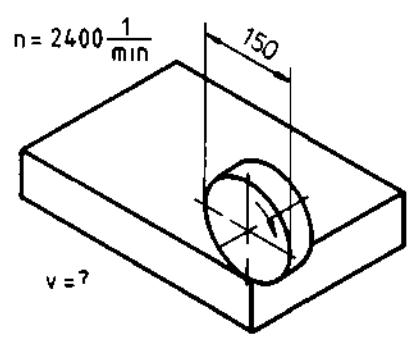

$v =$ ☐ $\frac{m}{min}$, $v =$ ☐ $\frac{m}{s}$

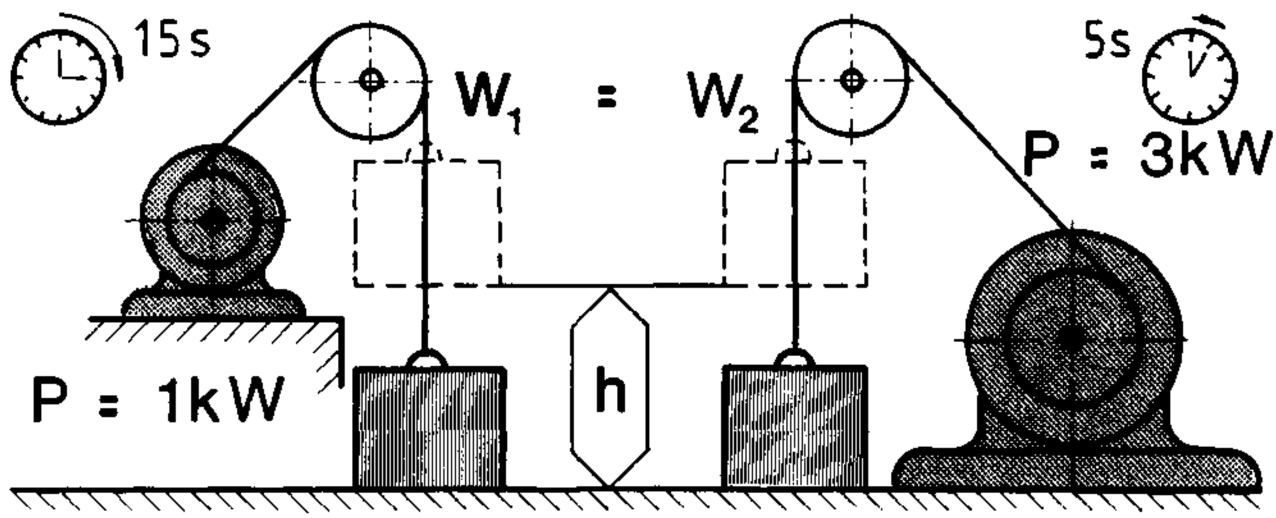

= ______

P = —— $\quad \frac{1Nm}{s} = 1W \quad$ **P = —·—**

P = F·v

1.

P = ?

F = 10000 N

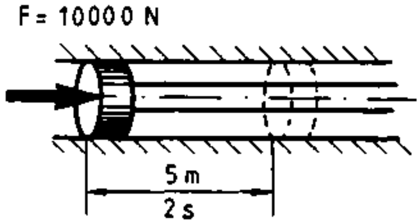

$P = \frac{F \cdot s}{t}$

$P = \frac{10000N \cdot 5m}{2s}$

P = 25000W

2.

F = 20 N $\quad v = 4 \frac{m}{s}$

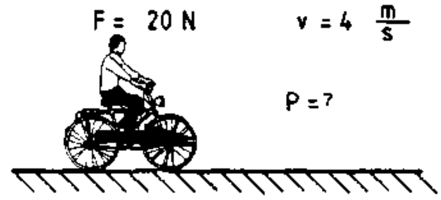

P = ?

P = F· v

$P = 20N \cdot 4\frac{m}{s}$

P = 80W

Test:

a) P = ?

F = 1000 N

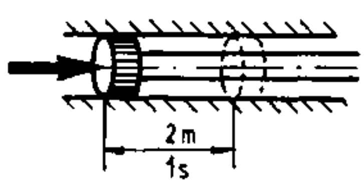

P = [ ] W

b) P = ?

W = 80 kJ

t = 20 s

P = [ ] W

c) P = ?

$v = 120 \frac{km}{h}$

F = 2400 N

P = [ ] kW

c) P = 80kW $\quad$ b) P = 4000W $\quad$ a) P = 2000W

$P_1 = 10\,kW$

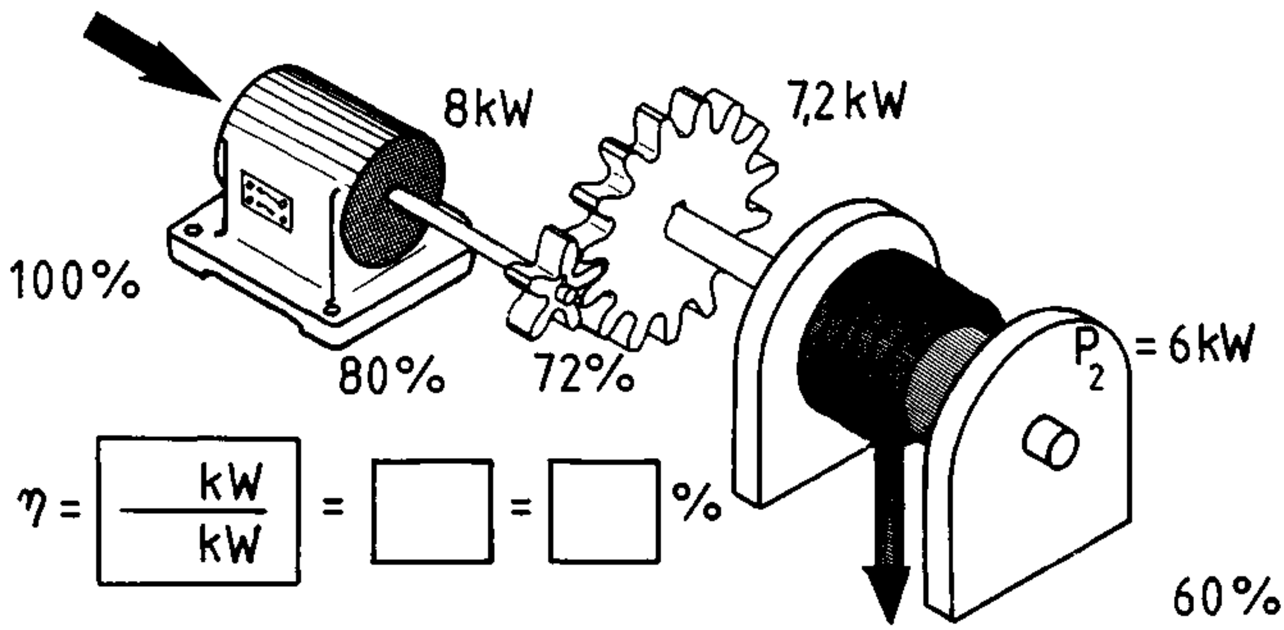

$\eta = \boxed{\frac{\quad kW}{\quad kW}} = \boxed{\quad} = \boxed{\quad}\,\%$

$\boxed{\qquad\qquad = \underline{\qquad\qquad}}$

$\boxed{\eta = \underline{\qquad}}$

Test

a)	b)	c)
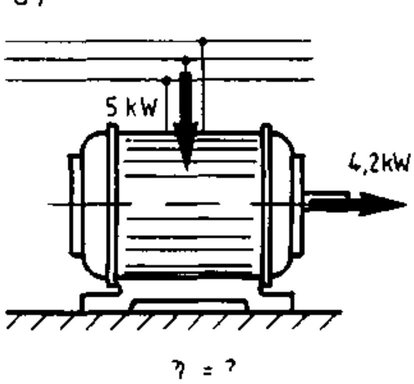	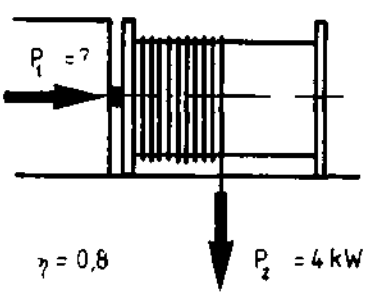	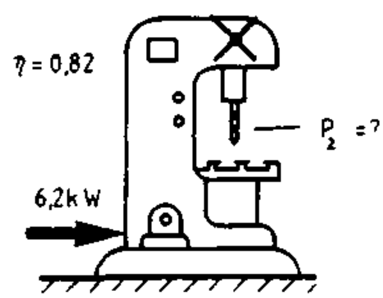
$\eta = \boxed{\quad}$	$P_1 = \boxed{\quad}$ kW	$P_2 = \boxed{\quad}$ kW

c) P_2= 656W   b) P_1= 5kW   a) η = 0,84

1

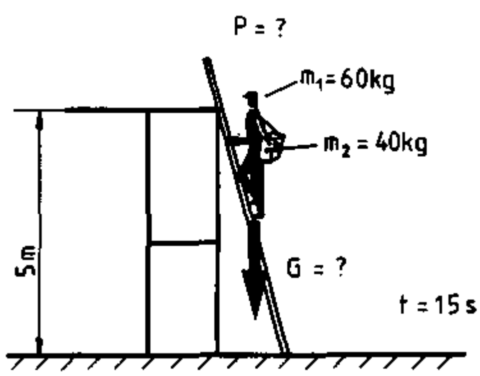

G = ______ N ; P = ______ W

2

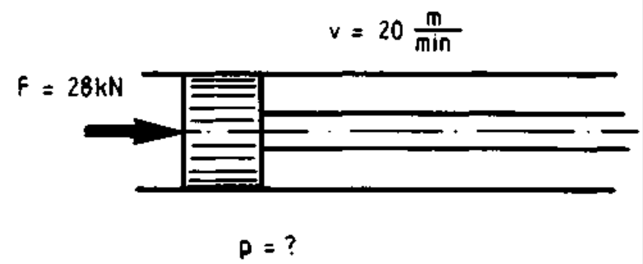

P = ______ kW

3

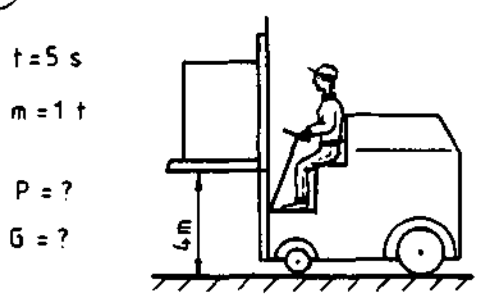

G = ______ N ; P = ______ kW

4

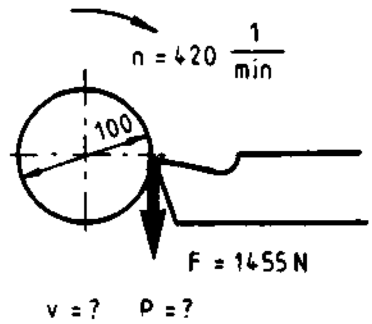

v = ______ $\frac{m}{s}$ P = ______ W

5

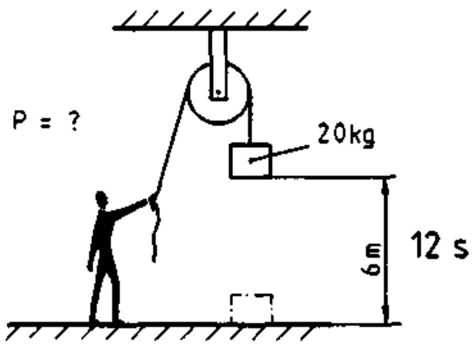

P = ______ W

6

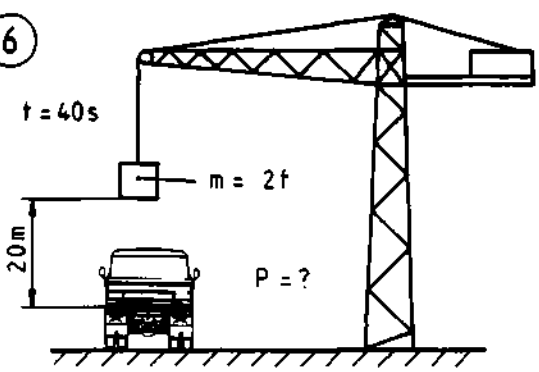

P = ______ kW

7

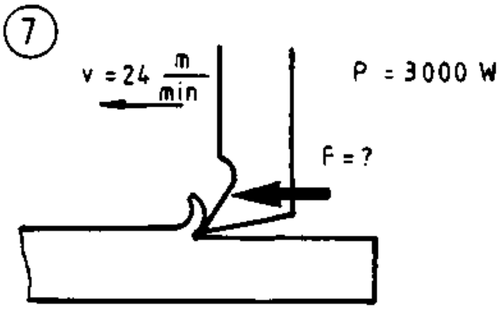

F = ______ N

8

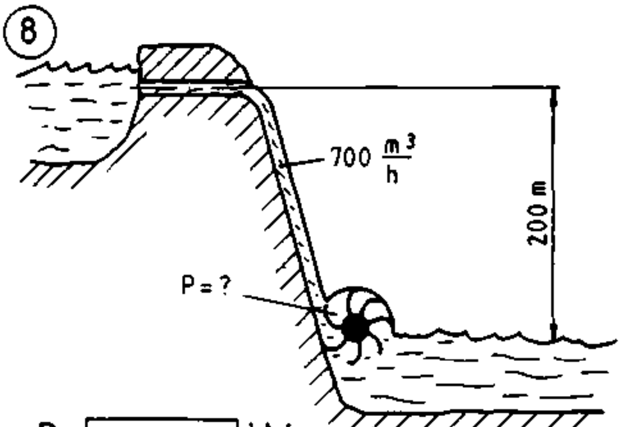

P = ______ kW

(1)

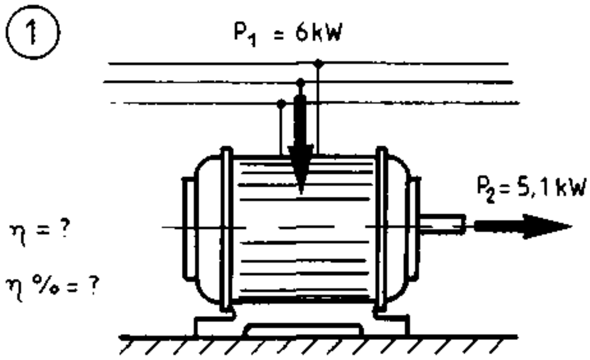

η = ______ ; η = ______ %

(2)

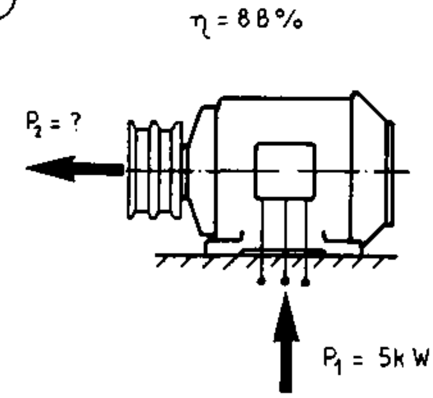

P_2 = ______ kW

(3)

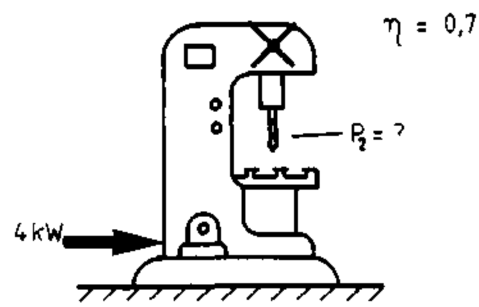

P_2 = ______ kW

(4)

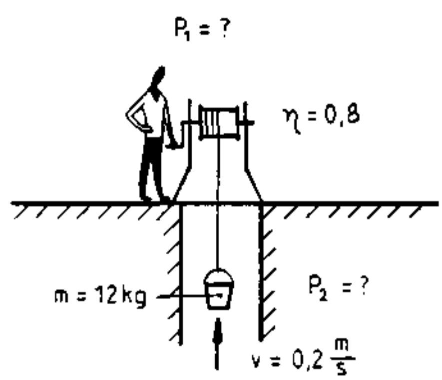

P_2 = ______ W ; P_1 = ______ W

(5)

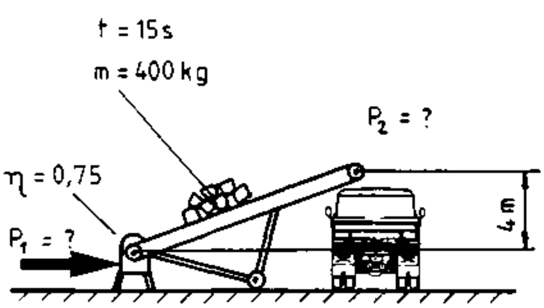

P_2 = ______ kW ; P_1 = ______ kW

(6)

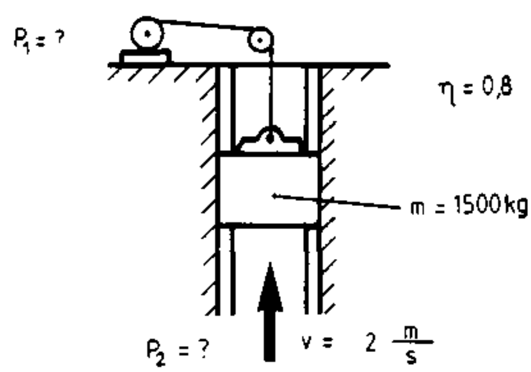

P_2 = ______ kW ; P_1 = ______ kW

(7)

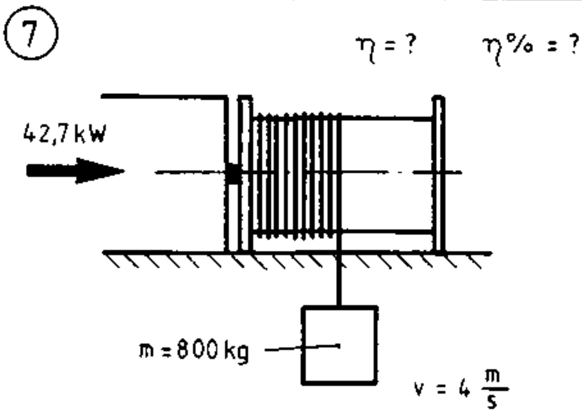

η = ______ ; η = ______ %

(8)

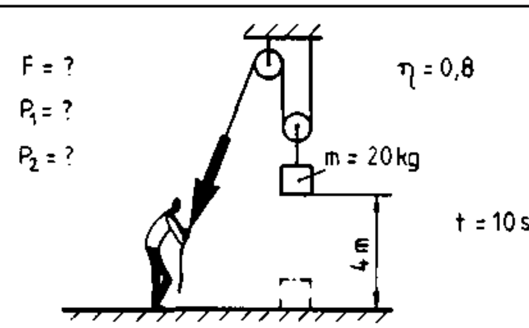

P_2 = ______ W

P_1 = ______ W ; F = ______ N

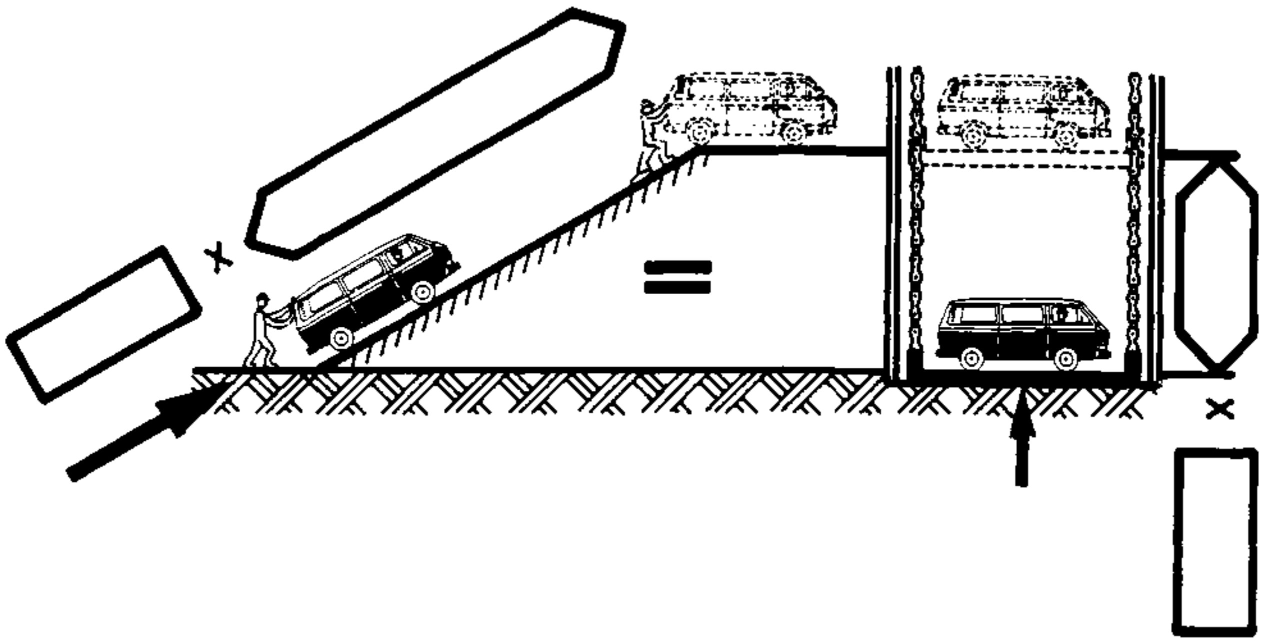

× = ×

F · s = ·

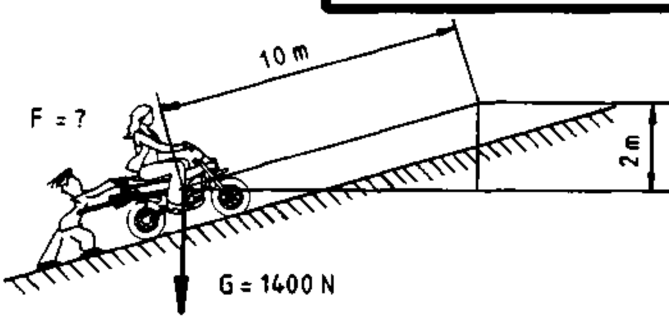

$$F \cdot s = G \cdot h$$

$$F = \frac{G \cdot h}{s}$$

$$F = \frac{1400\,N \cdot 2\,\cancel{m}}{10\,\cancel{m}}$$

$$F = 280\,N$$

Test:

a)

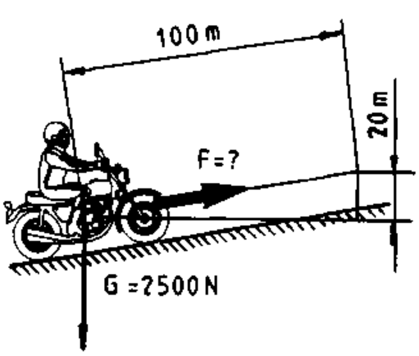

F = ☐ N

b)

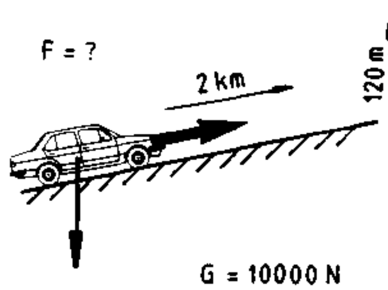

F = ☐ N

c)

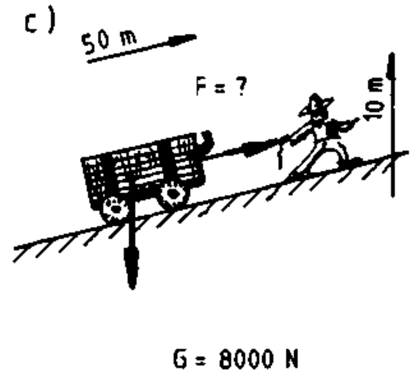

F = ☐ N

c) F = 1600N b) F = 600N a) F = 500N

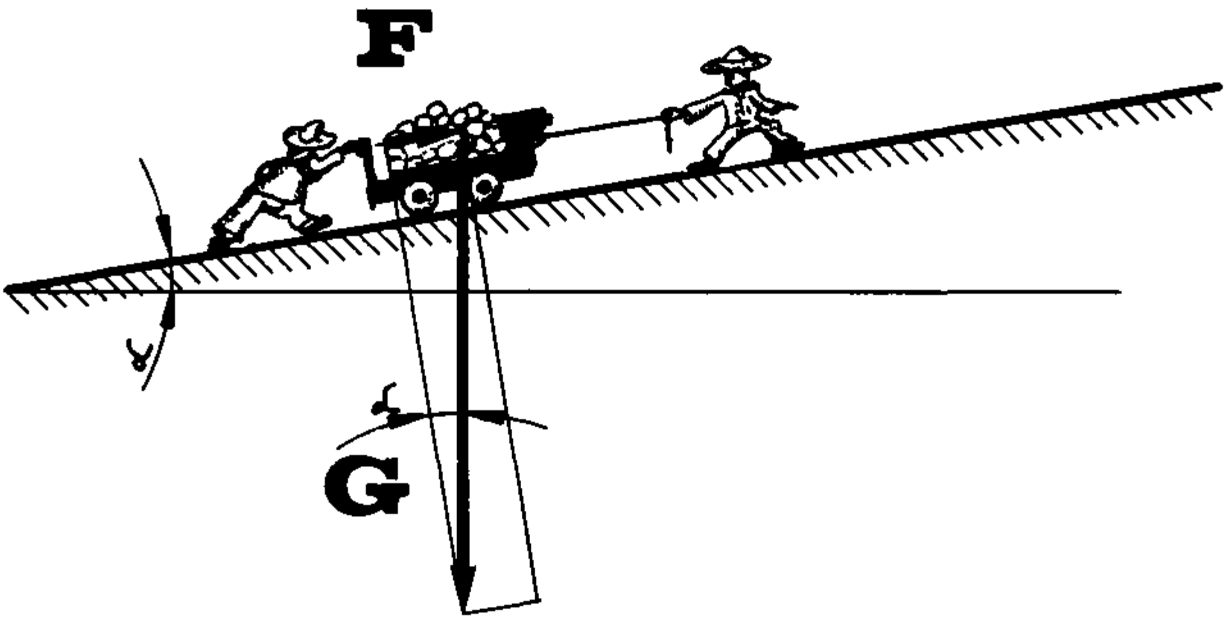

$$\sin\alpha = \text{——}$$

1.

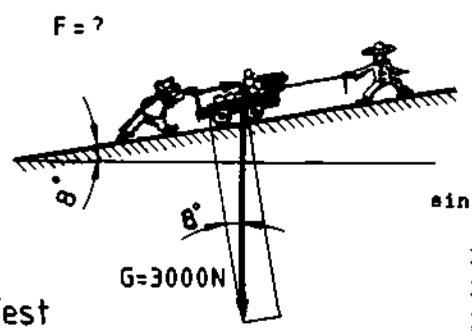

$\sin\alpha = \frac{F}{G}$

$F = G \cdot \sin\alpha$

$F = 3000N \cdot \sin 8^\circ$

$\underline{\underline{F = 418N}}$

2.

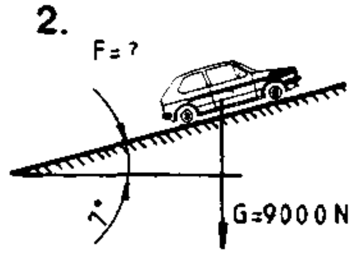

$\sin\alpha = \frac{F}{G}$

$F = G \sin\alpha$

$F = 9000N \cdot \sin 7^\circ$

$\underline{\underline{F = 1097N}}$

Test

a)

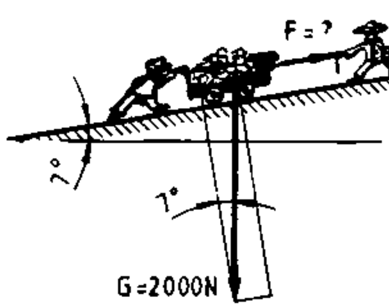

b)

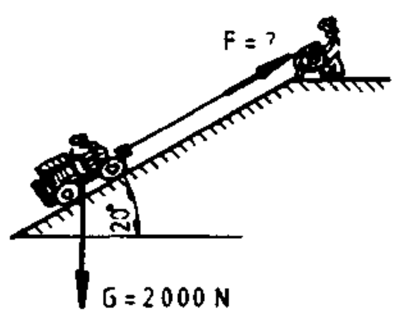

c)

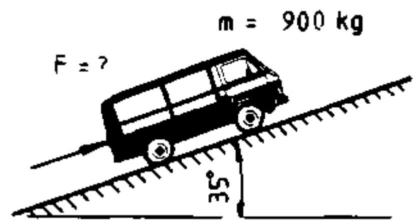

F = [ ] N	F = [ ] N	F = [ ] N

c) F = 5162N b) F = 684N a) F = 244N

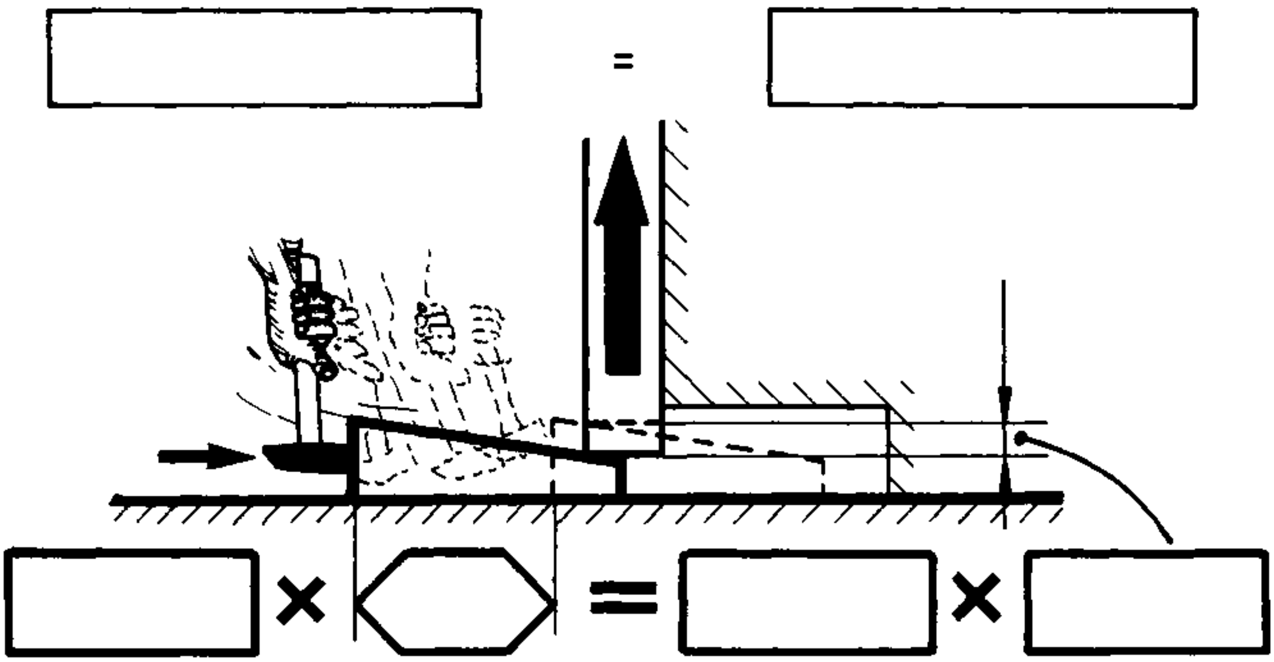

$$F_1 \cdot s = \quad \cdot$$

$F_1 = ?$

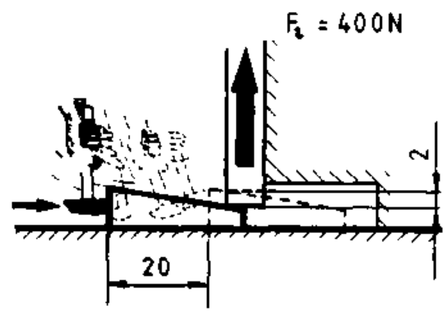

$$F_1 \cdot s = F_2 \cdot h$$
$$F_1 = \frac{F_2 \cdot h}{s}$$
$$F_1 = \frac{400N \cdot 2\cancel{mm}}{20\cancel{mm}}$$
$$\underline{\underline{F_1 = 40N}}$$

Test:

a)	b)	c)
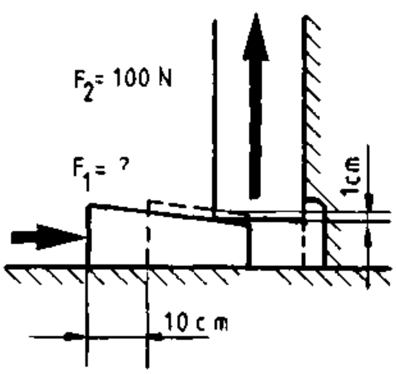	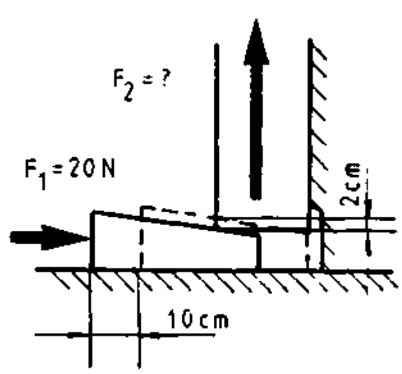	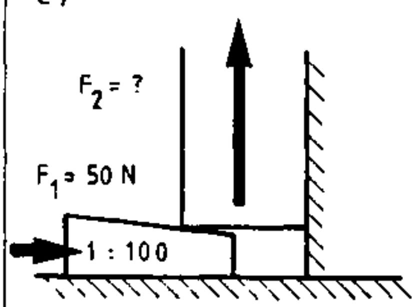
F_1 = ☐ N	F_2 = ☐ N	F_2 = ☐ N

a) F_1 = 10N
b) F_2 = 100N
c) F_2 = 5000N

1

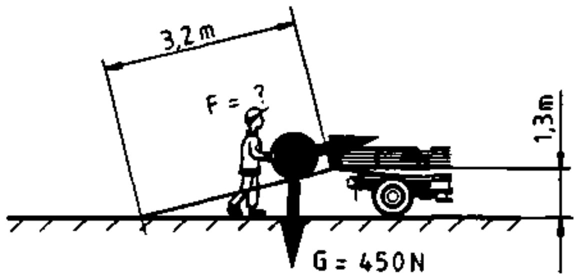

F = N

2

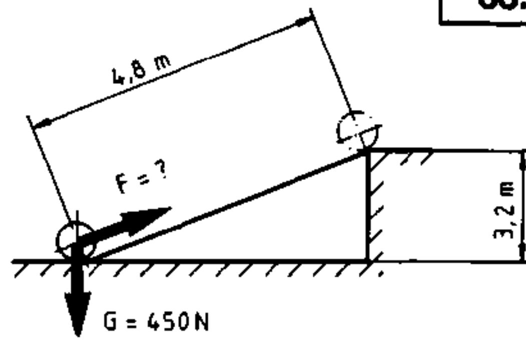

F = N

3

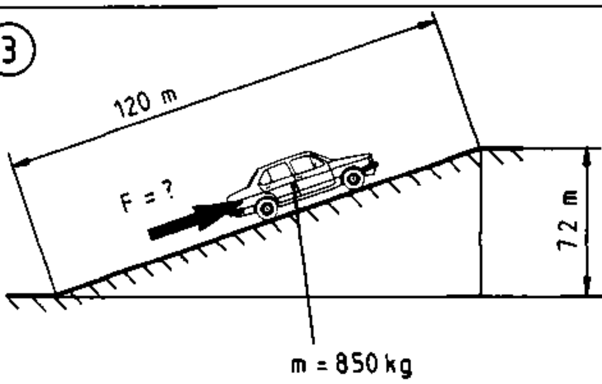

F = N

4

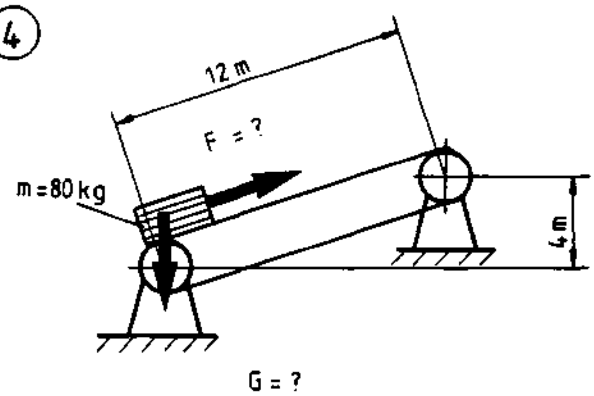

G = N ; F = N

5

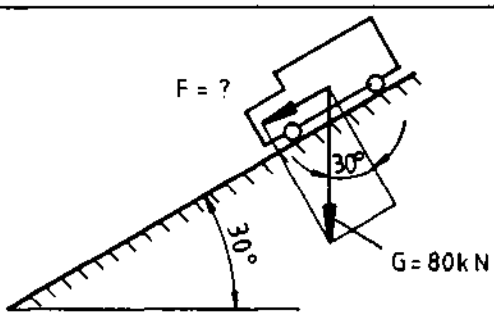

F = kN

6

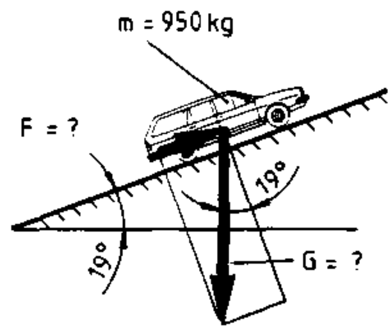

G = N ; F = N

7

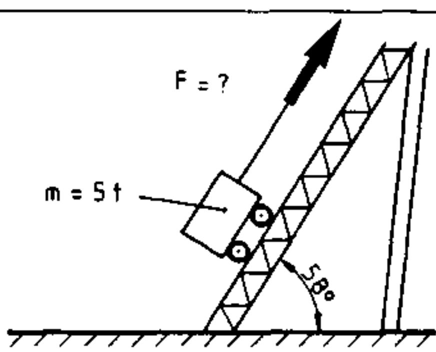

F = kN

8

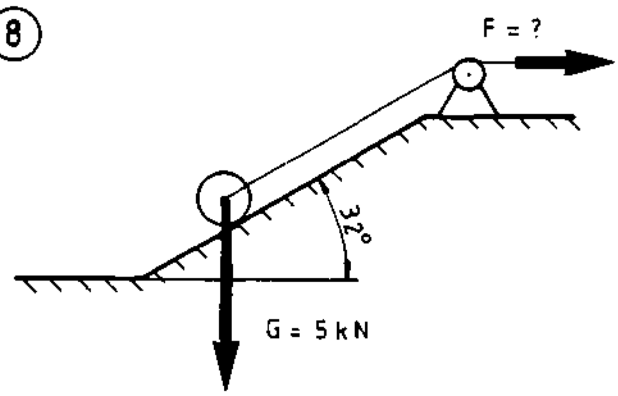

F = kN

①

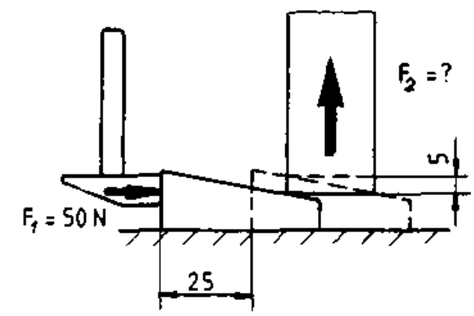

F_2 = ______ N

②

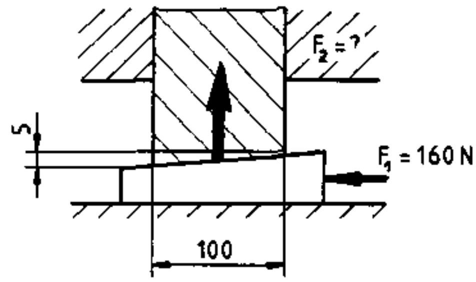

F_2 = ______ N

③

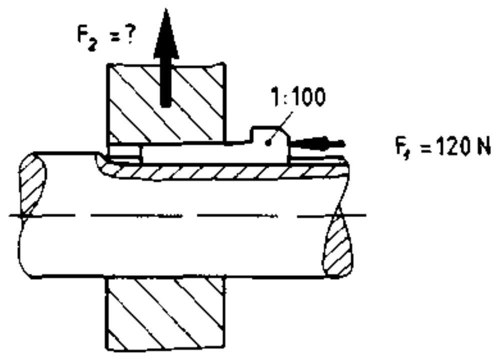

F_2 = ______ N

④

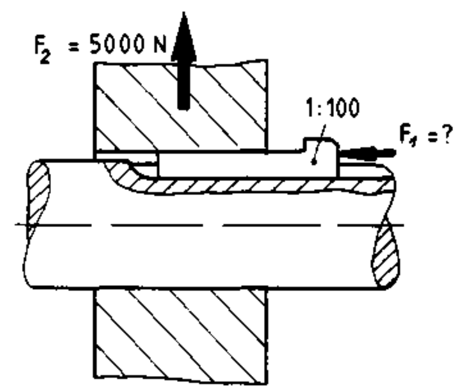

F_1 = ______ N

⑤

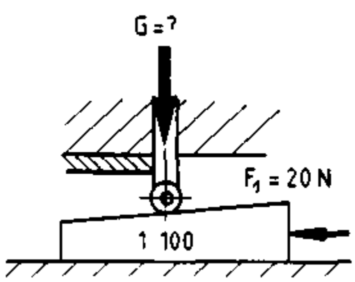

G = ______ N

⑥

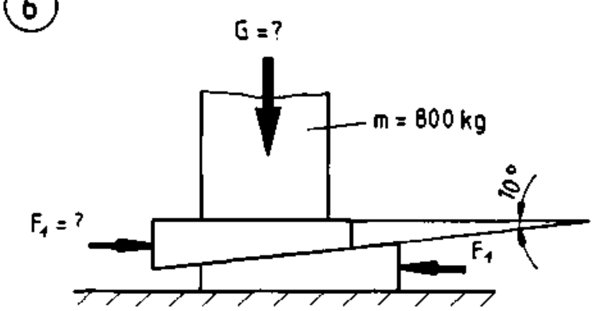

G = ______ N; F_1 = ______ N

⑦

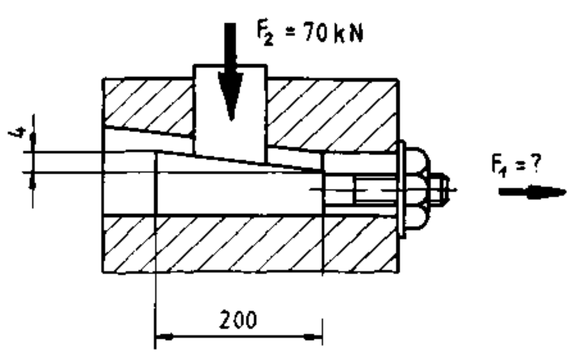

F_1 = ______ N

⑧

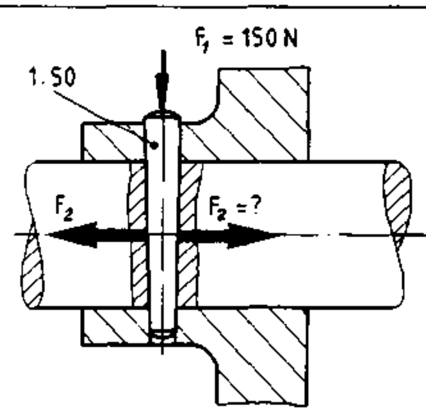

F_2 = ______ N

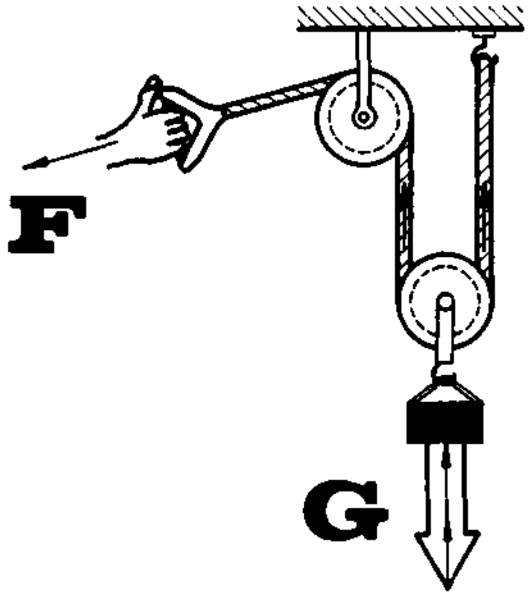

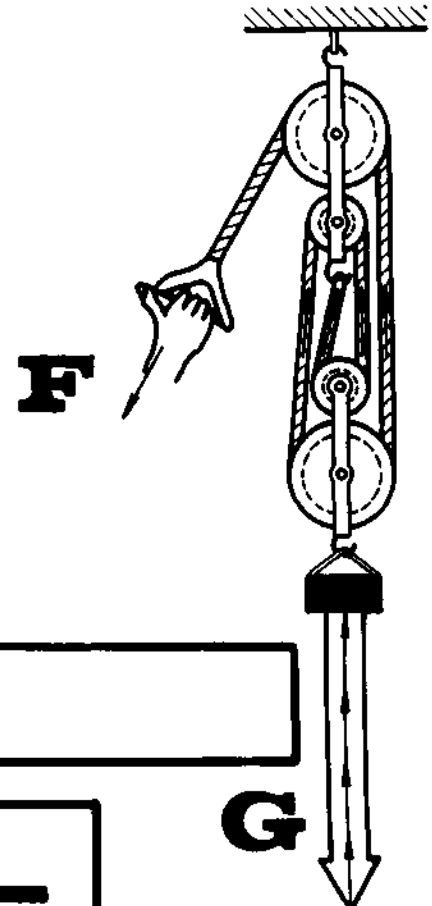

=

F = ——

1.

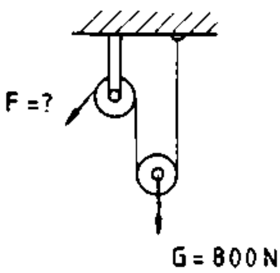

$F = \frac{G}{n}$

$F = \frac{800\ N}{2}$

$\underline{\underline{F = 400N}}$

2.

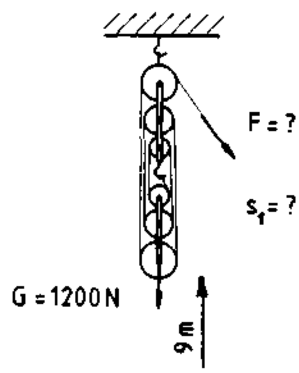

$F = \frac{G}{n}$

$F = \frac{1200N}{6}$

$\underline{\underline{F = 200N}}$

$s_1 = s_2 \cdot n$

$s_1 = 9m \cdot 6$

$\underline{\underline{s_1 = 54m}}$

Test:

a)

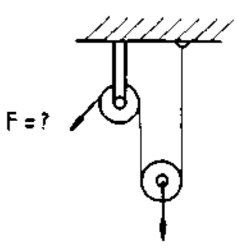

F = [ ] N

b)

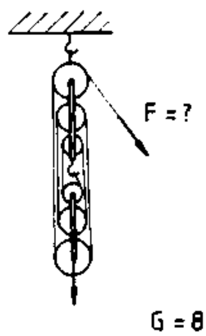

F = [ ] N

c)

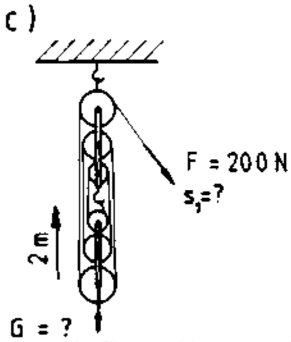

s_1 = [ ] m

G = [ ] N

a) F = 20N   b) F = 133N   c) G = 1200N s_1 = 12m

(1)

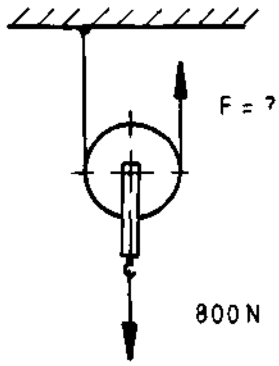

F = ____ N

(2)

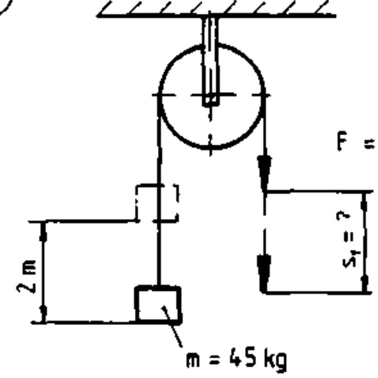

F = ____ N ; s_1 = ____ m

(3)

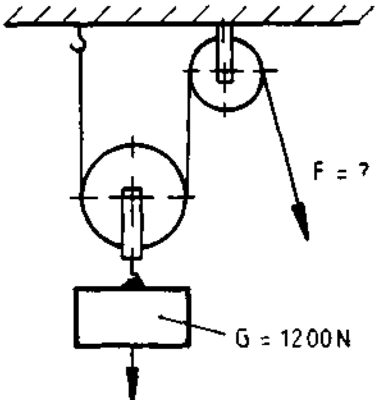

F = ____ N

(4)

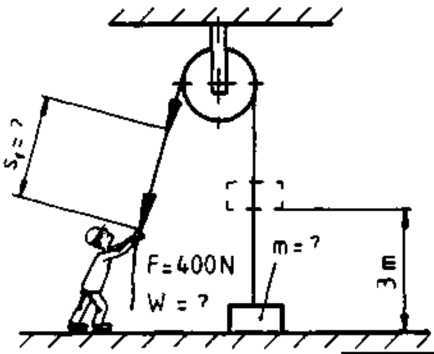

W = ____ J

s_1 = ____ m ; m = ____ kg

(5)

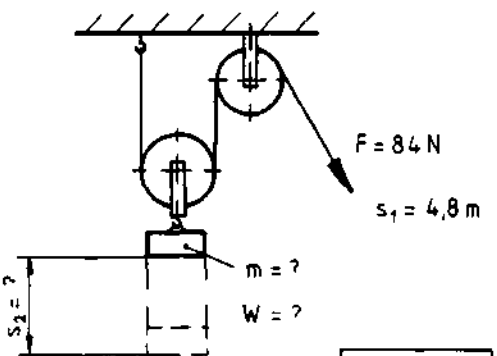

W = ____ J

m = ____ kg ; s_2 = ____ m

(6)

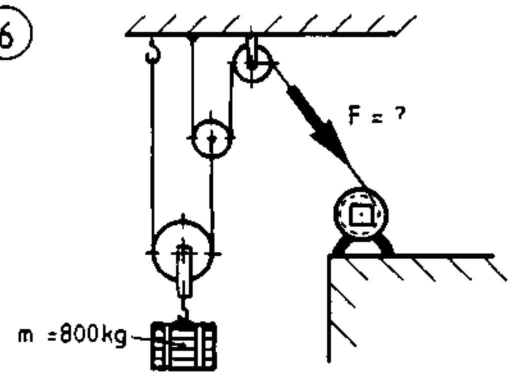

F = ____ N

(7)

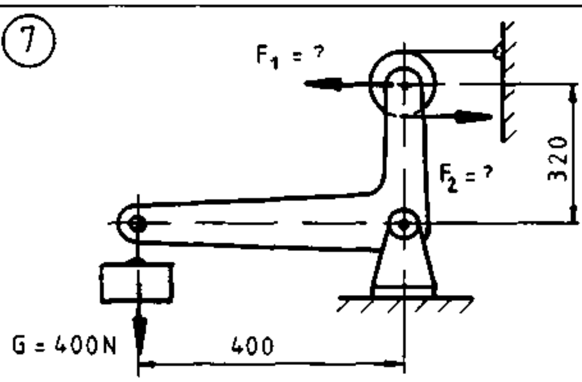

F_1 = ____ N , F_2 = ____ N

(8)

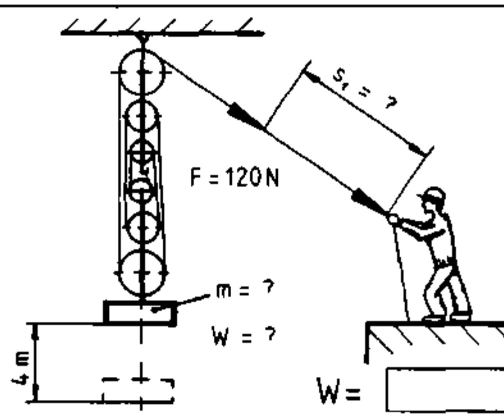

W = ____ J

m = ____ kg ; s_1 = ____ m

d = ·

h = — m

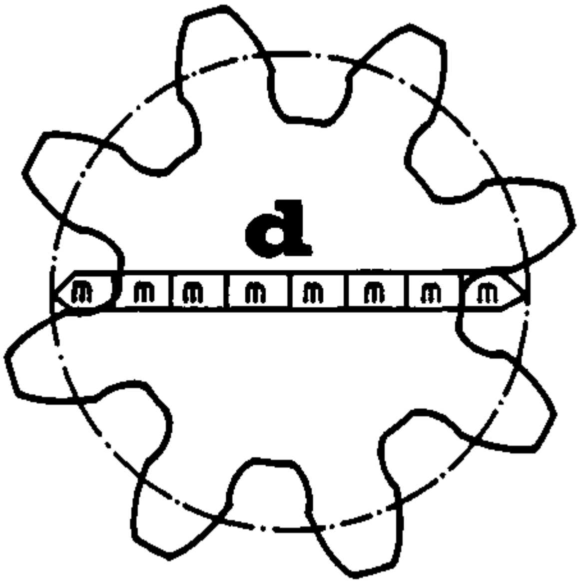

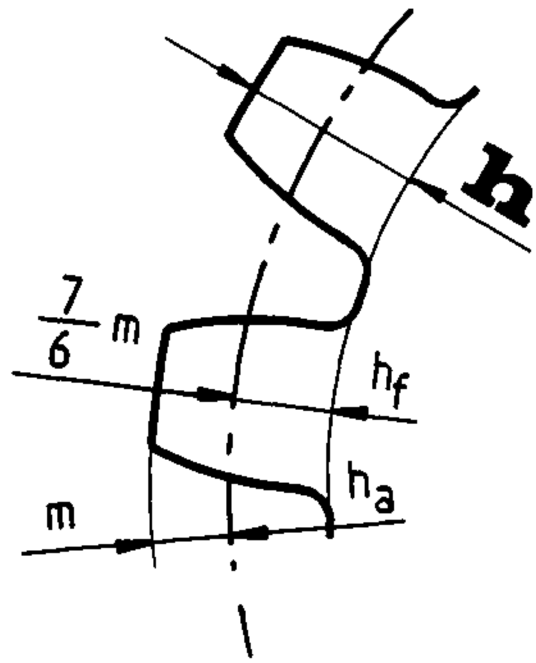

d = ?
h = ?
h_a = ?
h_f = ?

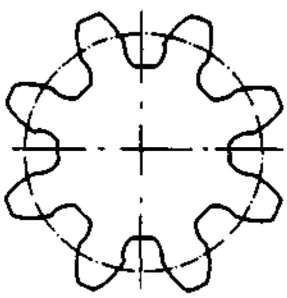

m = 4 mm

$d = m \cdot z$
$d = 4mm \cdot 8$
$\underline{\underline{d = 32mm}}$

$h = \frac{13}{6}\,m$
$h = \frac{13}{6} \cdot 4mm$
$\underline{\underline{h = 8{,}67mm}}$

$h_a = m$
$h_a = 4mm$
$h_f = \frac{7}{6}m$
$\underline{\underline{h_f = 4{,}67mm}}$

Test:

a) m = 1,75 mm	b) m = 1,75 mm	c)
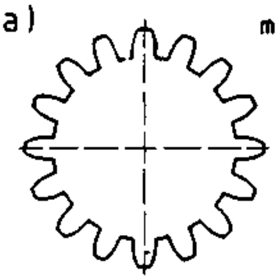	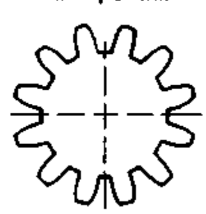	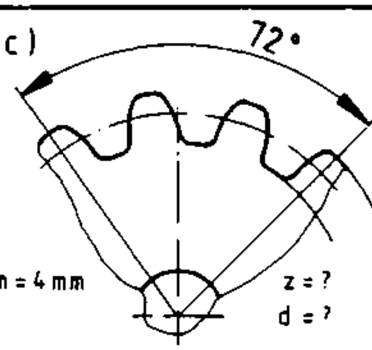
d = [ ] mm	d = [ ] mm	z = [ ]
h = [ ] mm	h = [ ] mm	d = [ ] mm

a) d = 28mm h = 3,79mm b) d = 21mm h = 3,79mm c) z = 15 d = 60mm

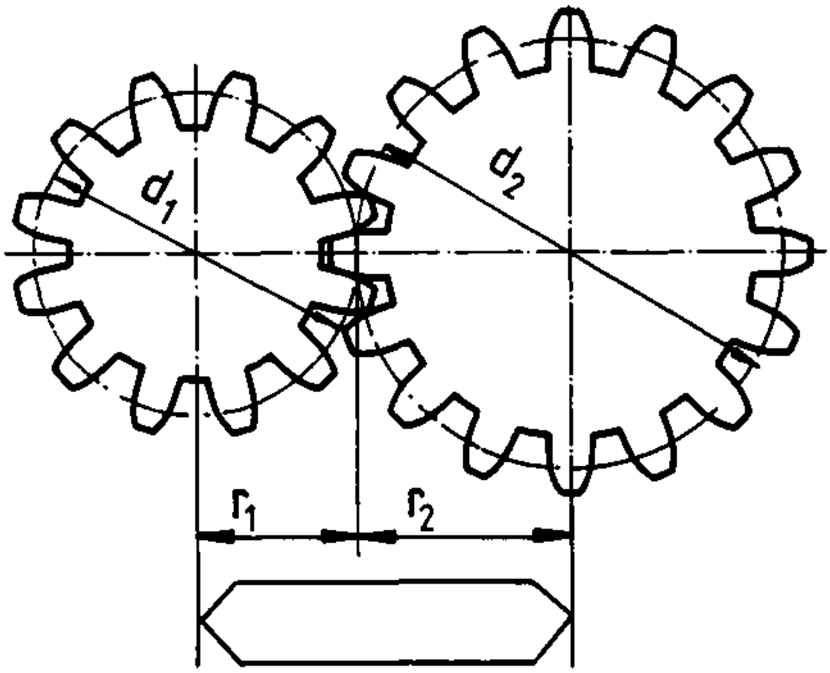

= +

1.

a = — + —

2.

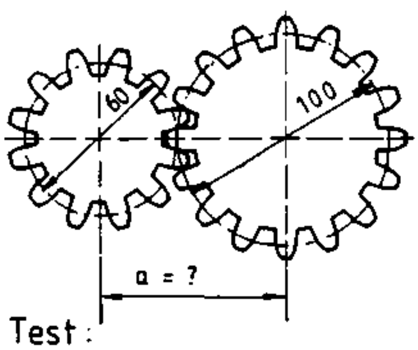

Test:

$a = \frac{d_1}{2} + \frac{d_2}{2}$

$a = \frac{60mm}{2} + \frac{100mm}{2}$

$\underline{\underline{a = 80mm}}$

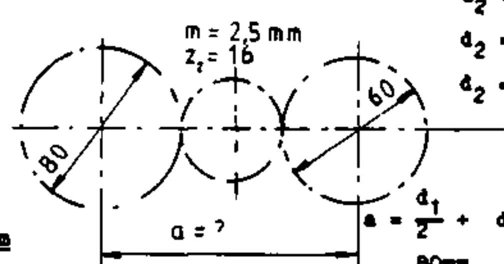

$d_2 = m \cdot z_2$

$d_2 = 2{,}5mm \cdot 16$

$d_2 = 40mm$

$a = \frac{d_1}{2} + d_2 + \frac{d_3}{2}$

$a = \frac{80mm}{2} + 40mm + \frac{60mm}{2}$

$\underline{\underline{a = 110mm}}$

a)

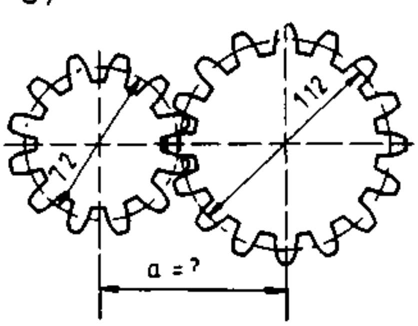

b) m = 5 mm

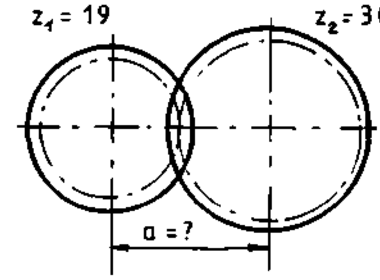

c)

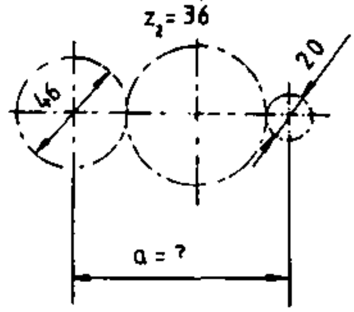

a)	b)	c)
a = ____ mm	a = ____ mm	a = ____ mm

a) a = 92mm b) a = 122,5mm c) a = 123mm

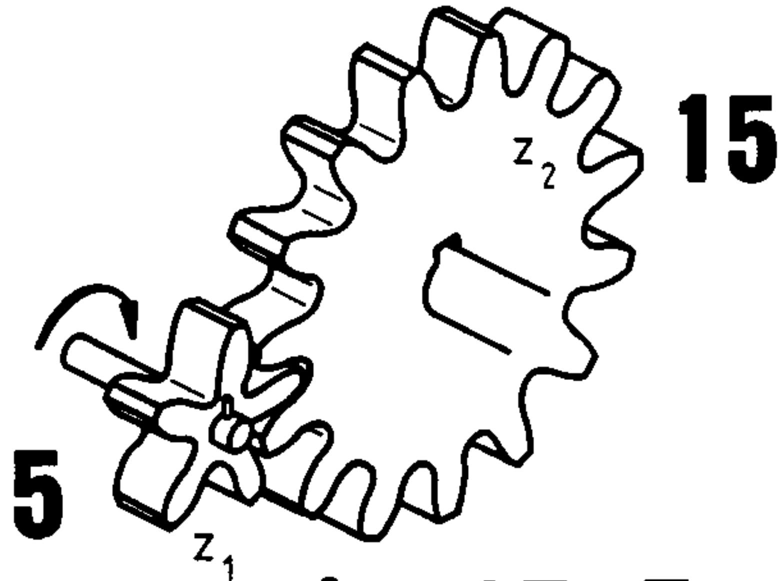

i = 15 : 5

i = 3 : 1

i = —— i = ——

= ——————

1.

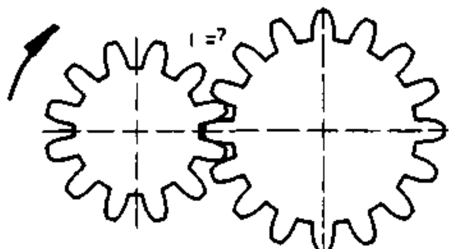

$i = \frac{z_2}{z_1}$

$i = \frac{12}{9}$

$\underline{\underline{i = 1,33}}$

Test

2.

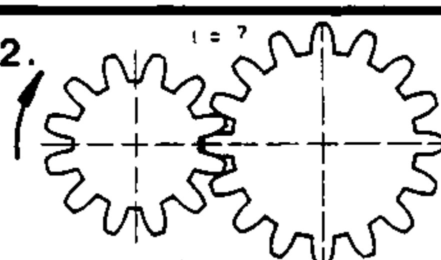

$i = \frac{n_1}{n_2}$

$i = \frac{400 \cancel{min}}{\cancel{min}\ 300}$

$\underline{\underline{i = 1,33}}$

$n_1 = 400\ \frac{1}{min}$ $n_2 = 300\ \frac{1}{min}$

a)	b)	c)
i = ?	i = 1,8 $n_1 = 1400\ \frac{1}{min}$	i = ? $n_1 = 800\ \frac{1}{min}$
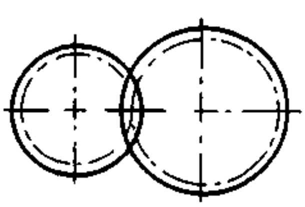	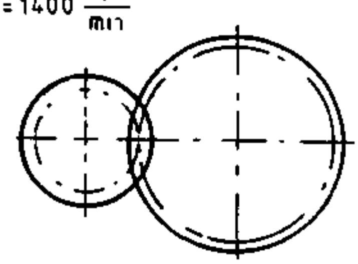	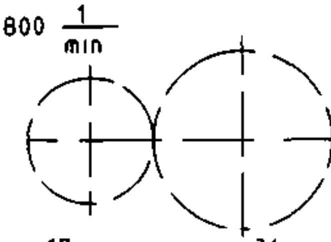
$n_1 = 160\ \frac{1}{min}$ $n_2 = 120\ \frac{1}{min}$	$n_2 = ?$	$z_1 = 17$ $z_2 = 34$ i =
i =	$n_2 =$ $\frac{1}{min}$	$n_2 =$ $\frac{1}{min}$

a) $i = 1,33$ b) $n_2 = 778\ 1/min$ c) $i = 2$; $n_2 = 400\ 1/min$

1

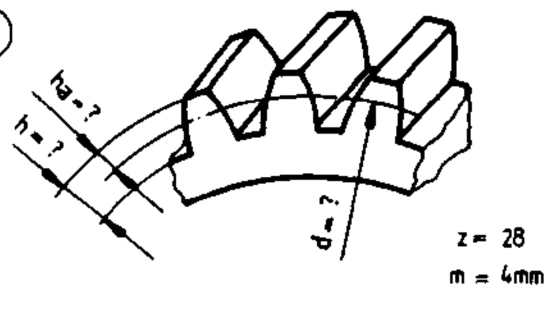

$z = 28$
$m = 4$ mm

$d =$ ______ mm

$h =$ ______ mm $h_a =$ ______ mm

2

$m = 5$ mm

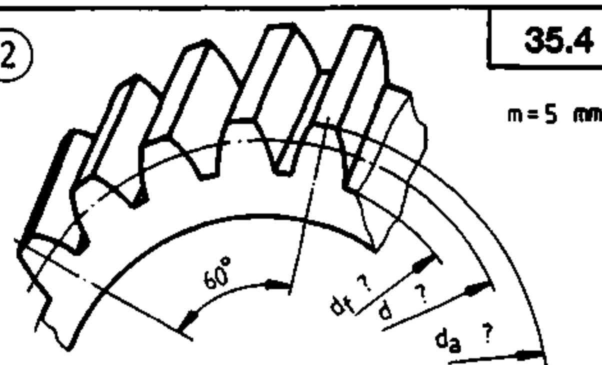

$z =$ ______ $d =$ ______ mm

$d_a =$ ______ mm $d_f =$ ______ mm

3

$m = 1,75$ mm

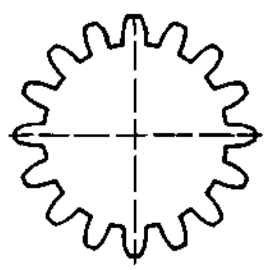

$z =$ ______

$h_a =$ ______ mm; $h_f =$ ______ mm

4

$z = 32$
$m = ?$
$d = ?$
$d_f = ?$

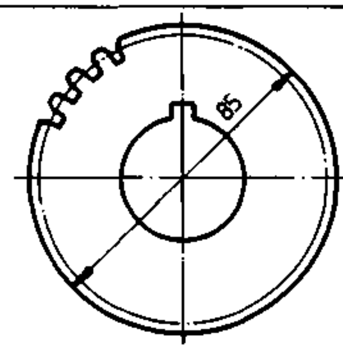

$m =$ ______ mm

$d =$ ______ mm $d_f =$ ______ mm

5

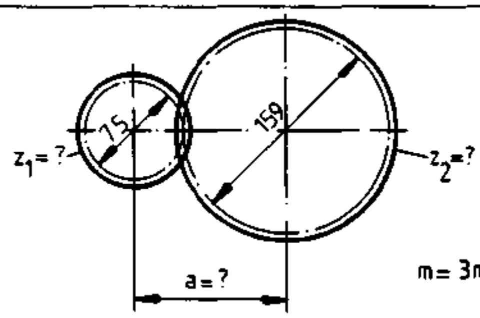

$m = 3$ mm

$z_1 =$ ______

$z_2 =$ ______ $a =$ ______ mm

6

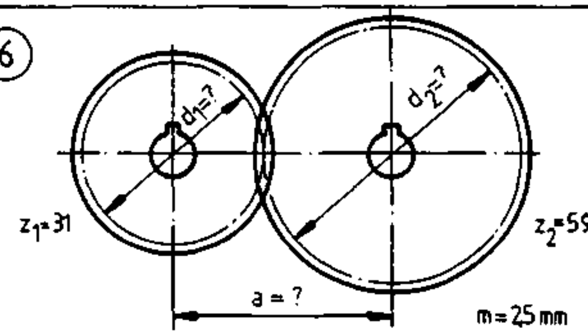

$m = 2,5$ mm

$d_1 =$ ______ mm

$d_2 =$ ______ mm $a =$ ______ mm

7

$m = 4$ mm
$z_1 = 31$

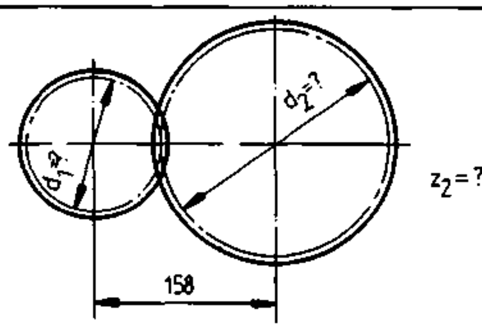

$d_1 =$ ______ mm

$d_2 =$ ______ mm $z_2 =$ ______

8

$z_1 = 31$
$z_2 = 92$
$m = 2,5$ mm

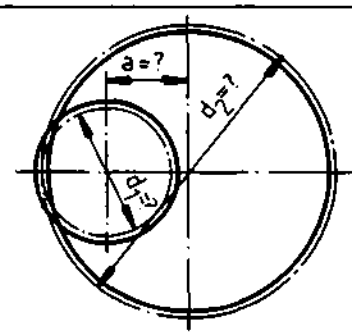

$d_1 =$ ______ mm

$d_2 =$ ______ mm $a =$ ______ mm

35.5

(1)

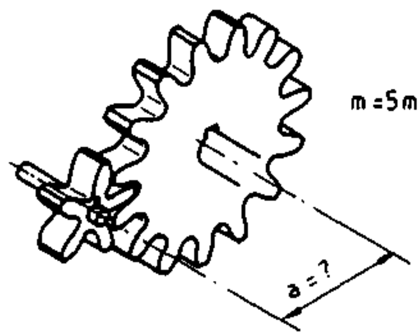

a = ☐ mm

(2)

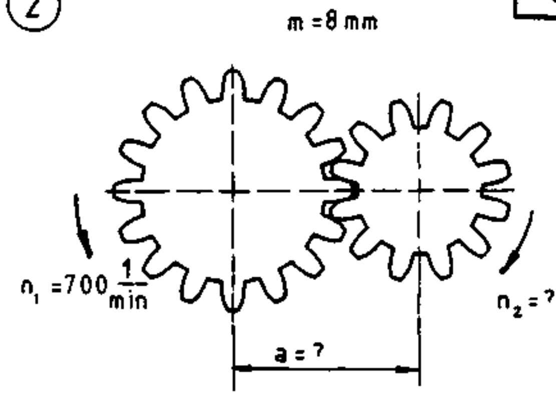

a = ☐ mm; n_2 = ☐ $\frac{1}{min}$

(3)

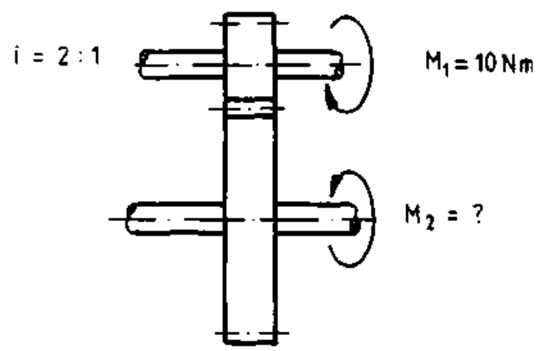

M_2 = ☐ Nm

(4)

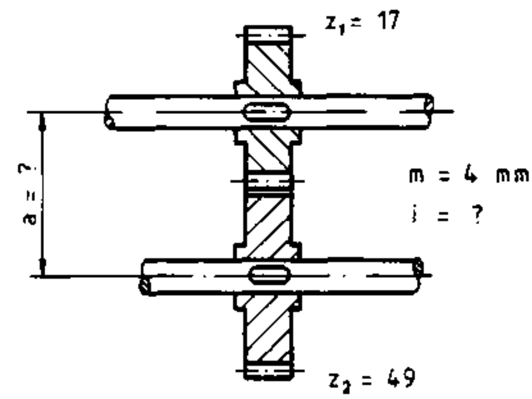

a = ☐ mm ; i = ☐

(5)

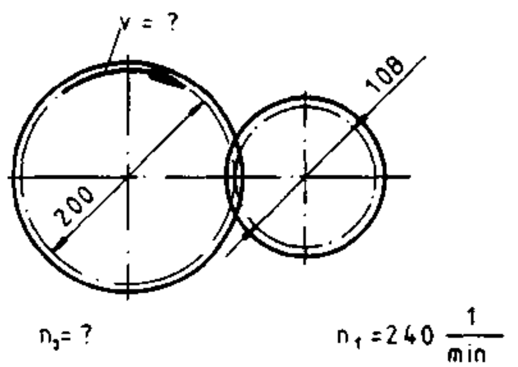

n_2 = ☐ $\frac{1}{min}$; v = ☐ $\frac{m}{s}$

(6)

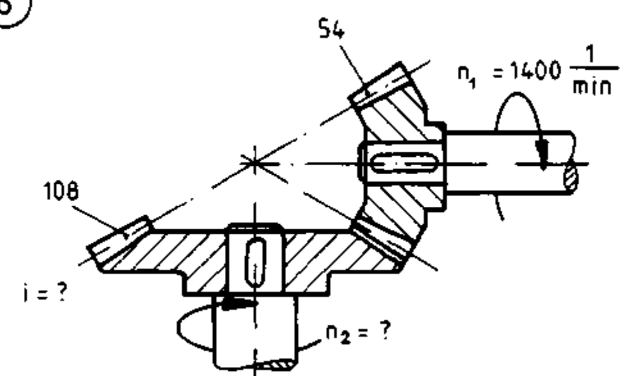

i = ☐ ; n_2 = ☐ $\frac{1}{min}$

(7)

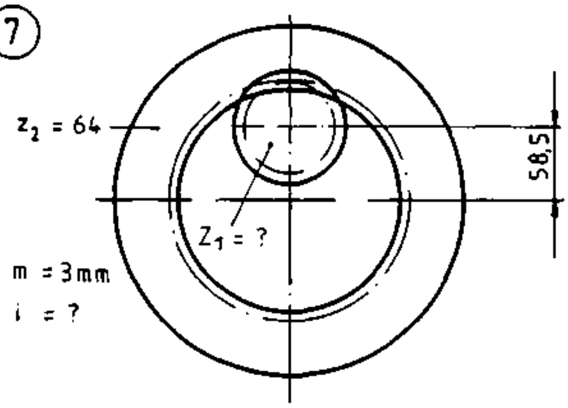

z_1 = ☐ ; i = ☐

(8)

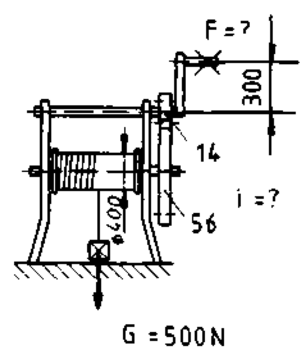

i = ☐ F = ☐ N

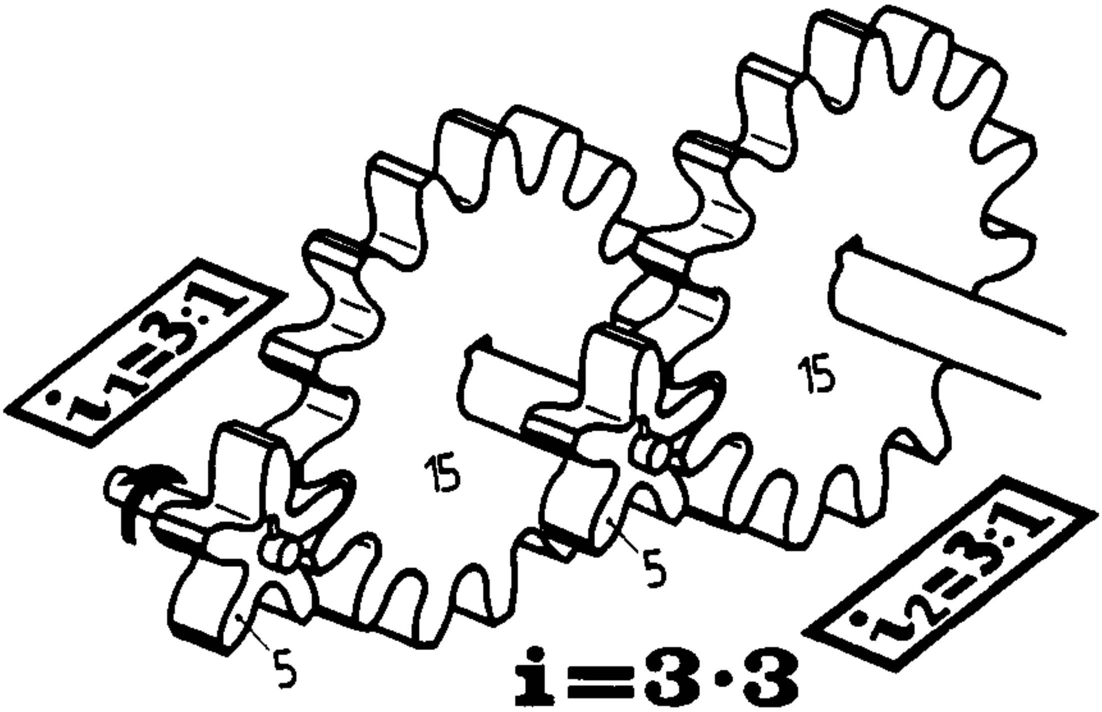

$i = 3 \cdot 3$

$i = \quad \cdot$	$i = \dfrac{z_2 \cdot z_4}{\quad}$	$i = \dfrac{n_1}{\quad}$

1.

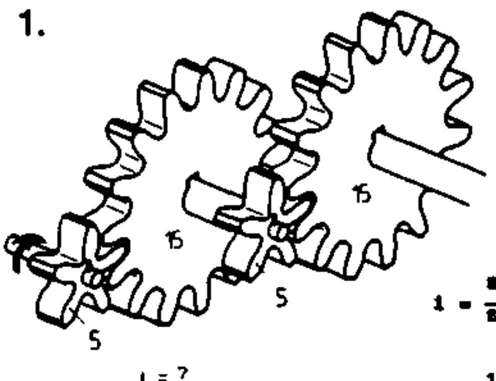

$i = ?$

$i = \frac{z_2 \cdot z_4}{z_1 \; z_2}$

$i = \frac{15 \cdot 15}{5 \cdot 5}$

$\underline{\underline{i = 9}}$

Test

2.

$i = ?$

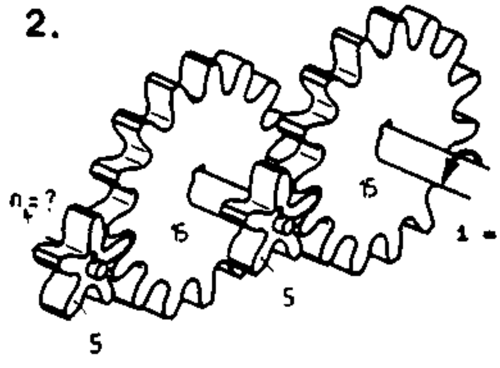

$n_1 = 700 \; \frac{1}{min}$

$i = \frac{n_1}{n_4} = \frac{z_2 \cdot z_4}{z_1 \cdot z_3}$

$n_4 = \frac{n_1 \cdot z_1 \cdot z_3}{z_2 \cdot z_4}$

$n_4 = \frac{700 \cdot 15 \cdot 15}{min \; 5 \cdot 5}$

$\underline{\underline{n_4 = 6300 \frac{1}{min}}}$

a)

$i = ?$

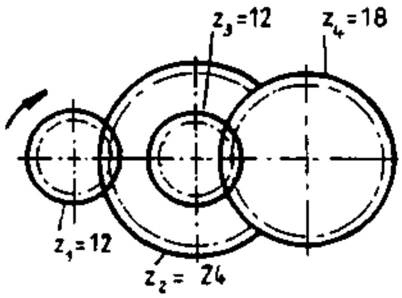

b)

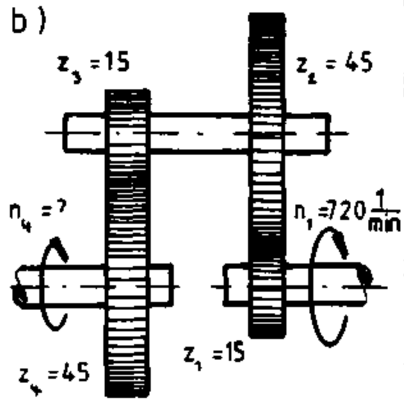

c)

$i = 9$

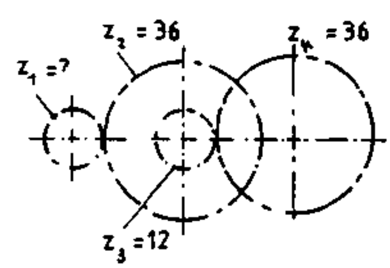

$i =$ ☐	$n_4 =$ ☐ $\frac{1}{min}$	$z_1 =$ ☐

a) $i = 3$ b) $n_4 = 80 \; 1/min$ c) $z_1 = 12$

1

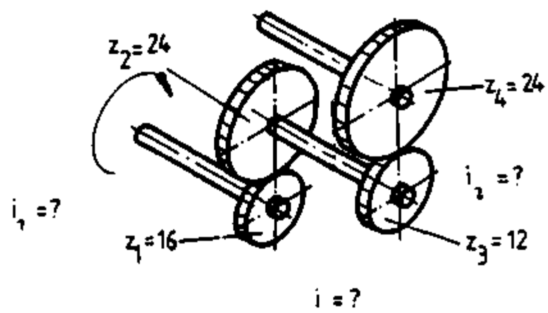

$i_1 =$ ☐

$i_2 =$ ☐ $i =$ ☐

2

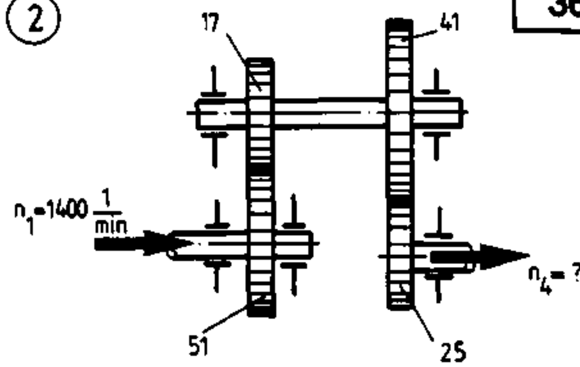

$n_4 =$ ☐ $\frac{1}{min}$ $i =$ ☐

3

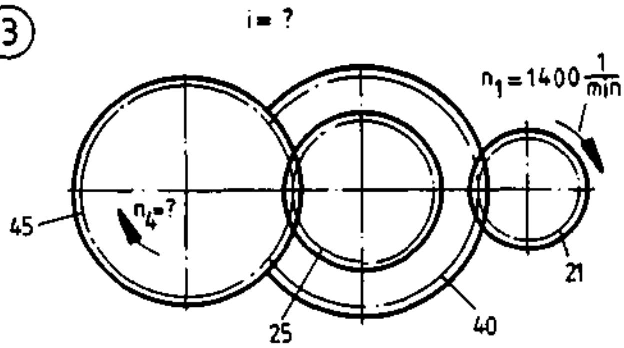

$i =$ ☐ $n_4 =$ ☐ $\frac{1}{min}$

4

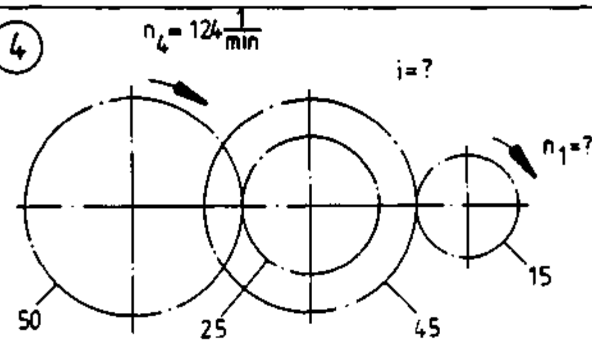

$i =$ ☐ $n_1 =$ ☐ $\frac{1}{min}$

5

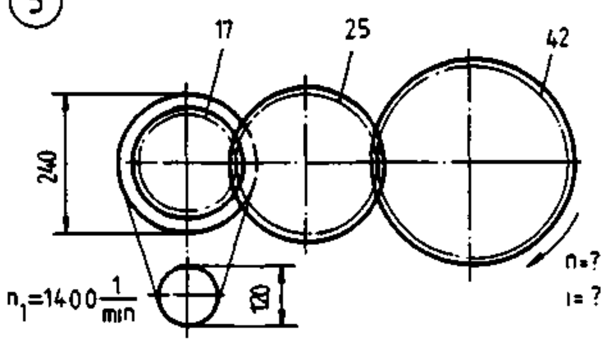

$i =$ ☐ $n =$ ☐ $\frac{1}{min}$

6

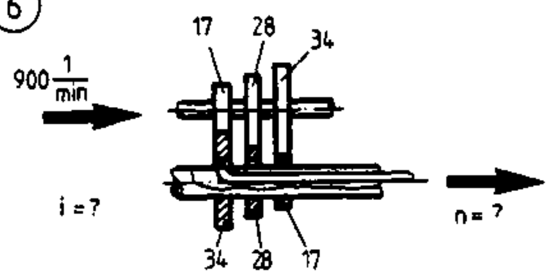

$i =$ ☐ $n =$ ☐ $\frac{1}{min}$

7

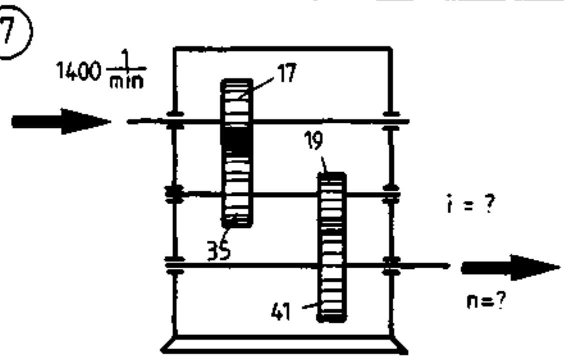

$i =$ ☐ $n =$ ☐ $\frac{1}{min}$

8

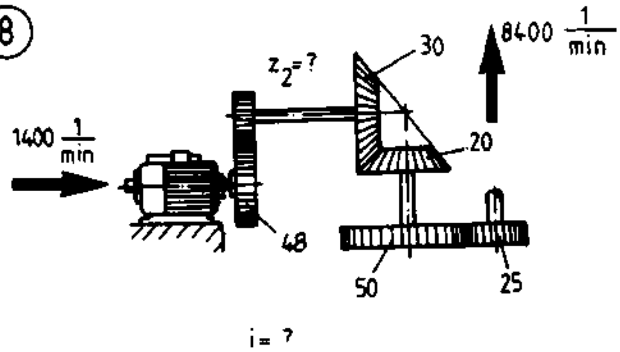

$i =$ ☐ $z_2 =$ ☐

⑨

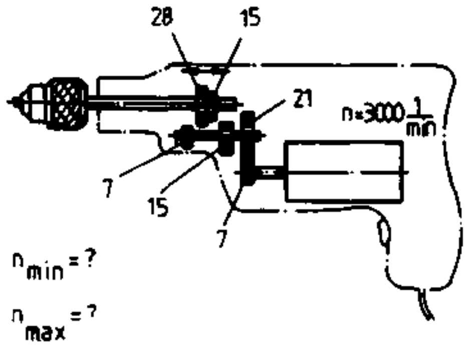

$n_{min} = \square \frac{1}{min}$; $n_{max} = \square \frac{1}{min}$

⑩

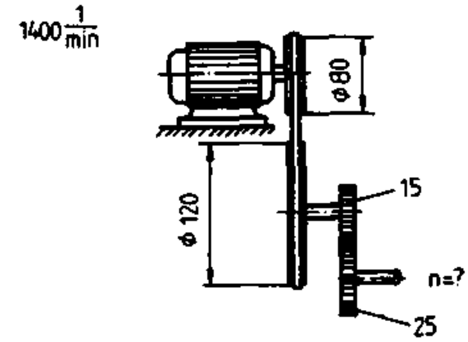

$n = \square \frac{1}{min}$

⑪

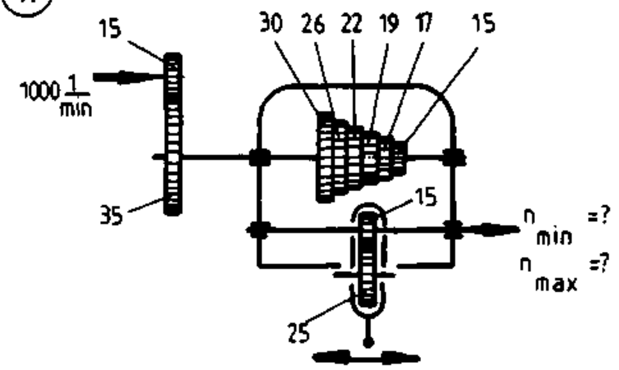

$n_{min} = \square \frac{1}{min}$; $n_{max} = \square \frac{1}{min}$

⑫

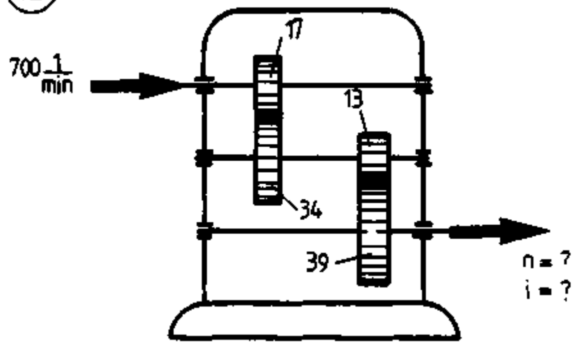

$i = \square$ $n = \square \frac{1}{min}$

⑬

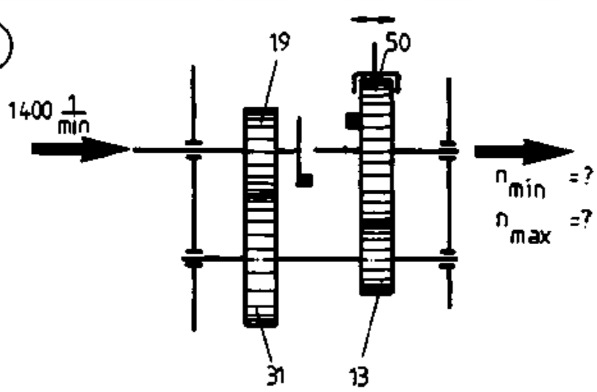

$n_{min} = \square \frac{1}{min}$; $n_{max} = \square \frac{1}{min}$

⑭

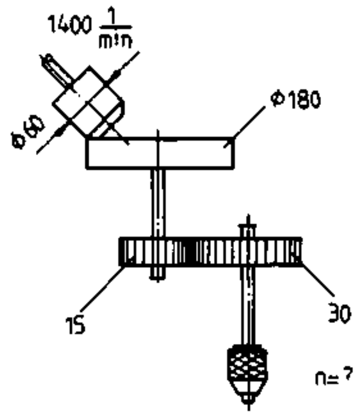

$n = \square \frac{1}{min}$

⑮

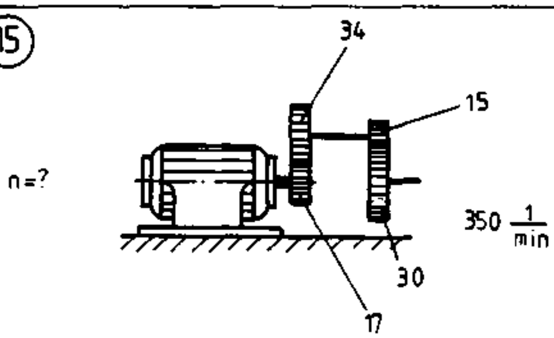

$n = \square \frac{1}{min}$

⑯

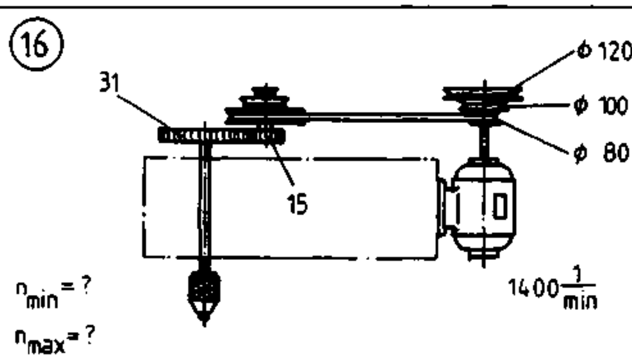

$n_{min} = \square \frac{1}{min}$ $n_{max} = \square \frac{1}{min}$

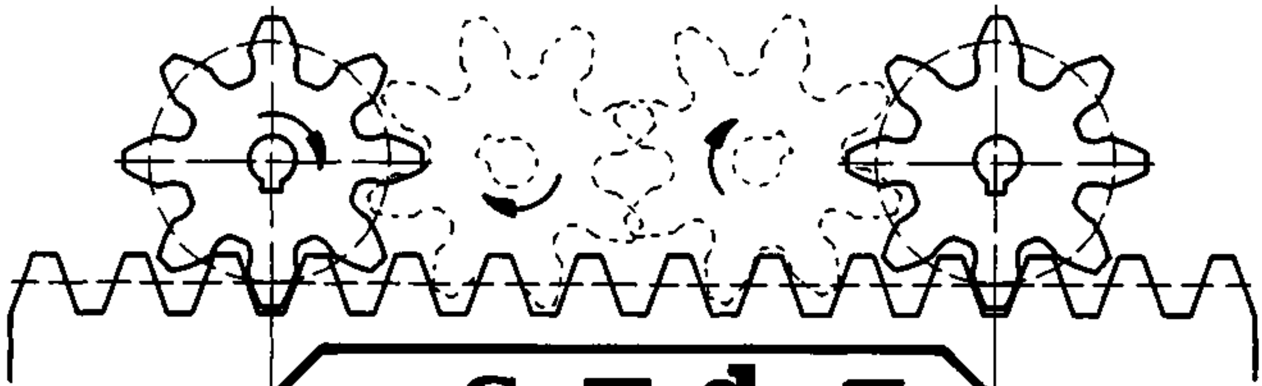

$$s = d \cdot \pi$$

$$=$$

$$s = \quad \cdot \quad \cdot$$

1.

z = 12
m = 4mm

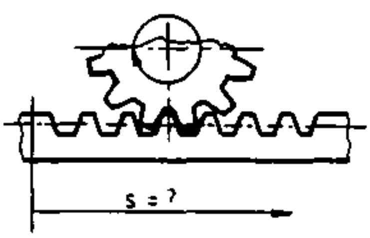

Test

$s = m \cdot z \cdot \pi$
$s = 4mm \cdot 12 \cdot 3{,}14$
$\underline{\underline{s = 150{,}72mm}}$

2.

z = 15 m = 5 mm

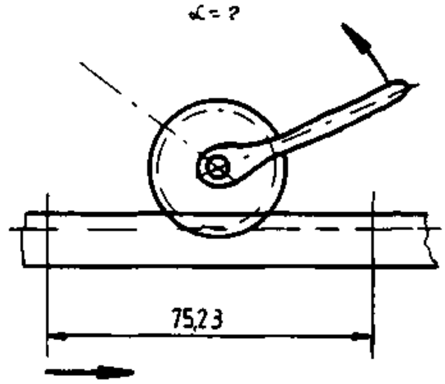

$s = m \cdot z \cdot \pi$
$s = 5mm \cdot 15 \cdot 3{,}14$
$\underline{\underline{s = 235{,}5mm}}$

$\frac{\alpha}{360^0} = \frac{75{,}23\cancel{mm}}{235{,}5\cancel{mm}}$

$\alpha = \frac{75{,}23 \cdot 360^0}{235{,}5}$

$\underline{\underline{\alpha = 115^0}}$

a)

z = 12 m = 6 mm

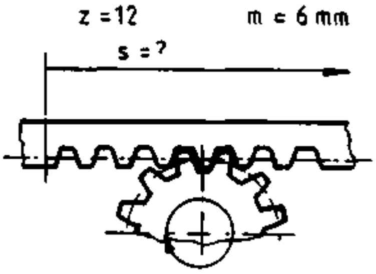

s = [ ] mm

b)

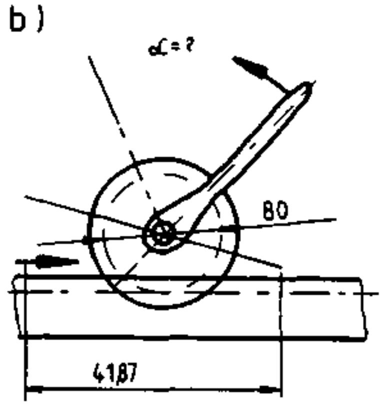

α = [ ] °

c)

m = 4 mm
z = 21

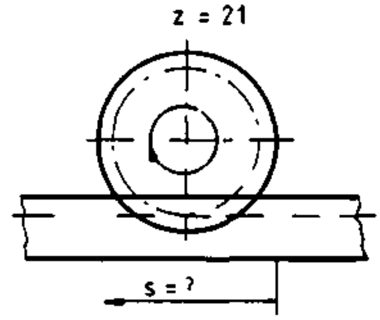

s = [ ] mm

a) s = 226,08mm
b) α = 60°
c) s = 263,76mm

20 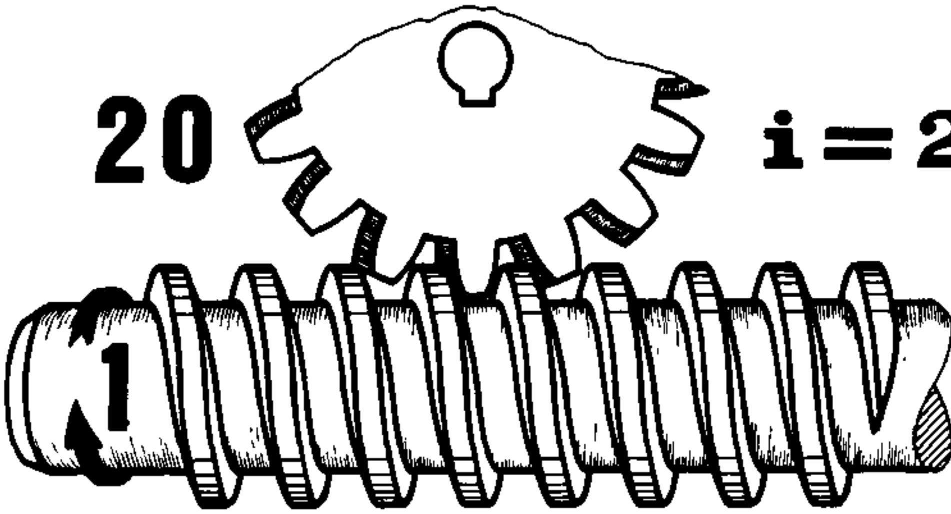 $i = 20:1$

= ______

i = ______ $\qquad$ i = ______

1.

$i = ?$

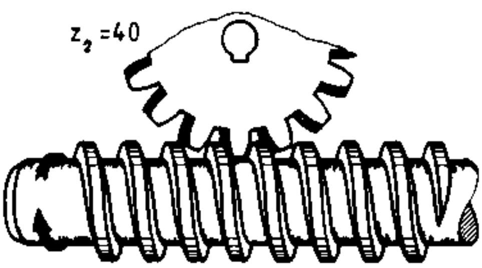

Test: $z_1 = 1$

$i = \frac{z_2}{z_1}$

$i = \frac{40}{1}$

$\underline{\underline{i = 40}}$

2.

$i = ?$

$n_2 = ?$

$z_2 = 40$

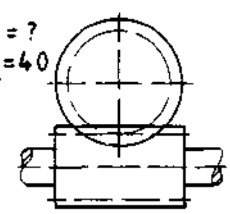

$n_1 = 1400 \frac{1}{min}$ $\qquad z_1 = 2$

$i = \frac{z_2}{z_1}$

$i = \frac{40}{2}$

$\underline{\underline{i = 20}}$

$i = \frac{n_1}{n_2}$

$n_2 = \frac{n_1}{i}$

$n_2 = \frac{1400}{min\ 20}$

$\underline{\underline{n_2 = 70 \frac{1}{min}}}$

a) $i = ?$ $\qquad z_2 = 40$

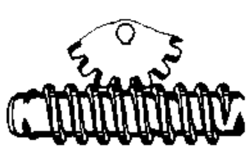

$z_1 = 2$

$i =$ ☐

b) $i = ?$ $\qquad n_2 = 70 \frac{1}{min}$

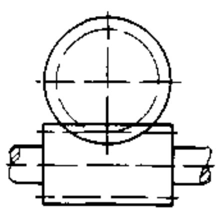

$n_1 = 1400 \frac{1}{min}$

$i =$ ☐

c) $i = ?$ $\qquad n_2 = ?$

$z_2 = 40$

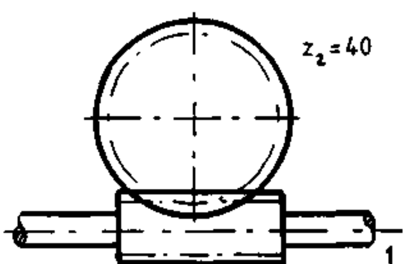

$z_1 = 1$ $\qquad n_1 = 1400 \frac{1}{min}$

$i =$ ☐

$n_2 =$ ☐ $\frac{1}{min}$

a) $i = 20$ $\qquad$ b) $i = 20$ $\qquad$ c) $i = 40$, $n_2 = 35 \frac{1}{min}$

①

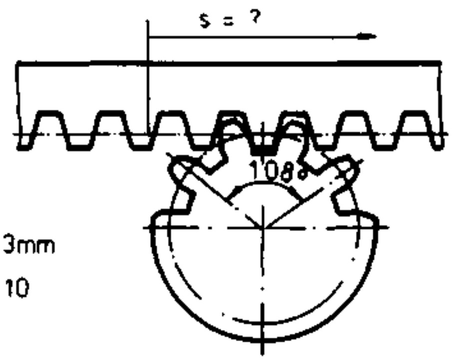

m = 3mm
z = 10

s = ☐ mm

②

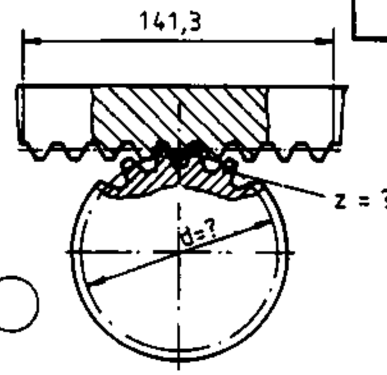

m = 3mm

1 ◯

d = ☐ mm ; z = ☐

③

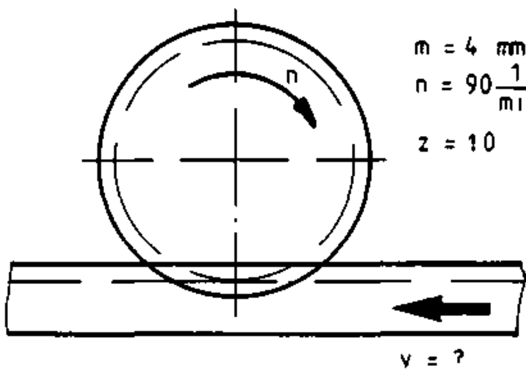

m = 4 mm
$n = 90 \frac{1}{min}$
z = 10

$v =$ ☐ $\frac{m}{min}$

④

$v = 6,28 \frac{m}{min}$

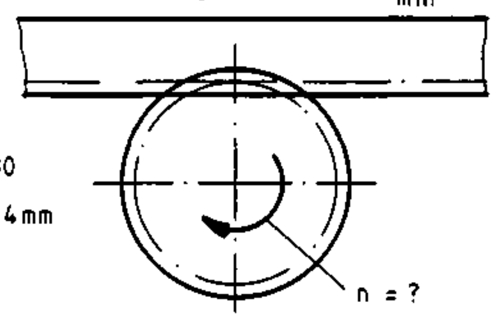

z = 30
m = 4mm

$n =$ ☐ $\frac{1}{min}$

⑤

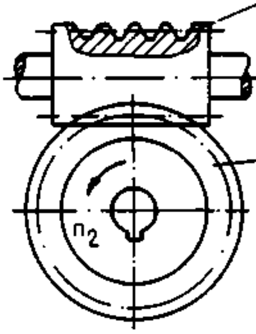

$z_1 = 1$
$n_1 = 1200 \frac{1}{min}$
$z_2 = ?$
$n_2 = 40 \frac{1}{min}$
i = ?

i = ☐ ; z_2 = ☐

⑥

$n_2 = ?$
i = ?

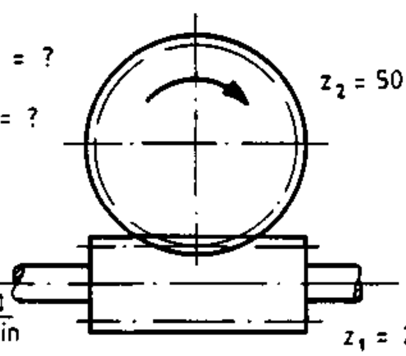

$z_2 = 50$
$n_1 = 1400 \frac{1}{min}$
$z_1 = 2$

i = ☐ ; $n_2 =$ ☐ $\frac{1}{min}$

⑦

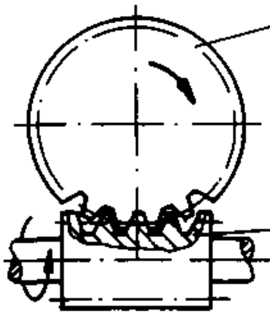

$z_2 = 20$
$n_2 = 70 \frac{1}{min}$
$z_1 = ?$
$n_1 = 1400 \frac{1}{min}$

$z_1 =$ ☐

⑧

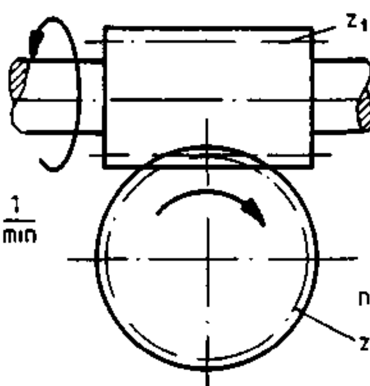

$z_1 = 3$
$n_1 = 1500 \frac{1}{min}$
$n_2 = ?$
$z_2 = 30$

$n_2 =$ ☐ $\frac{1}{min}$

(9)

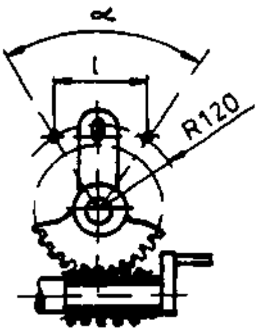

l = ?

α = ?

m = 5mm

$z_2 = 40$

10 ◯

$z_1 = 1$

α = [ ] ° , l = [ ] mm

(10)

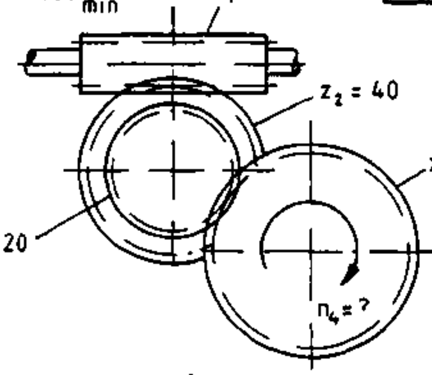

$n_4 =$ [ ] $\frac{1}{min}$

(11)

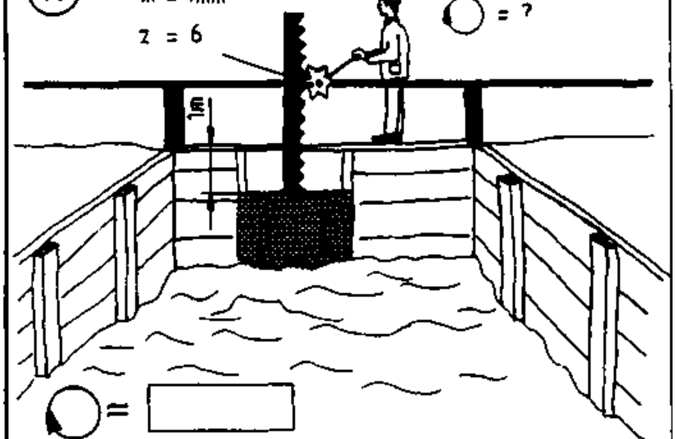

◯ = ?

◯ = [ ]

(12)

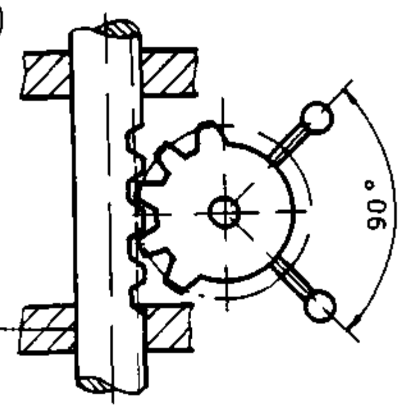

m = 4 mm

z = 24

s = [ ] mm

(13)

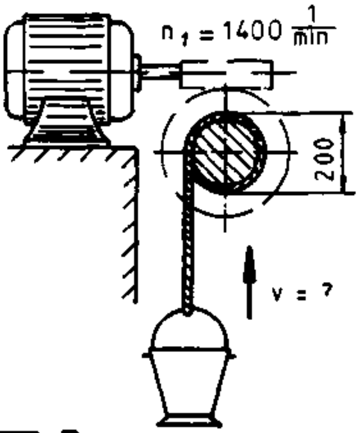

$z_1 = 1$

$z_2 = 40$

v = [ ] $\frac{m}{s}$

(14)

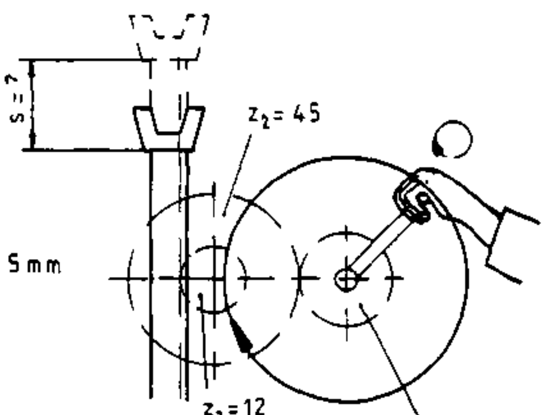

m = 5 mm

s = [ ] mm

(15)

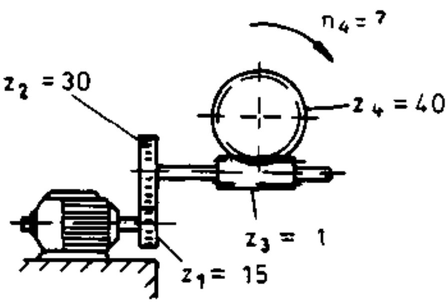

$n_1 = 1400 \frac{1}{min}$

$n_4 =$ [ ] $\frac{1}{min}$

(16)

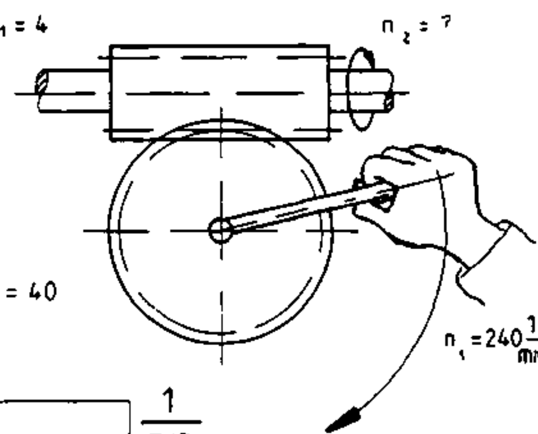

$n_2 =$ [ ] $\frac{1}{min}$

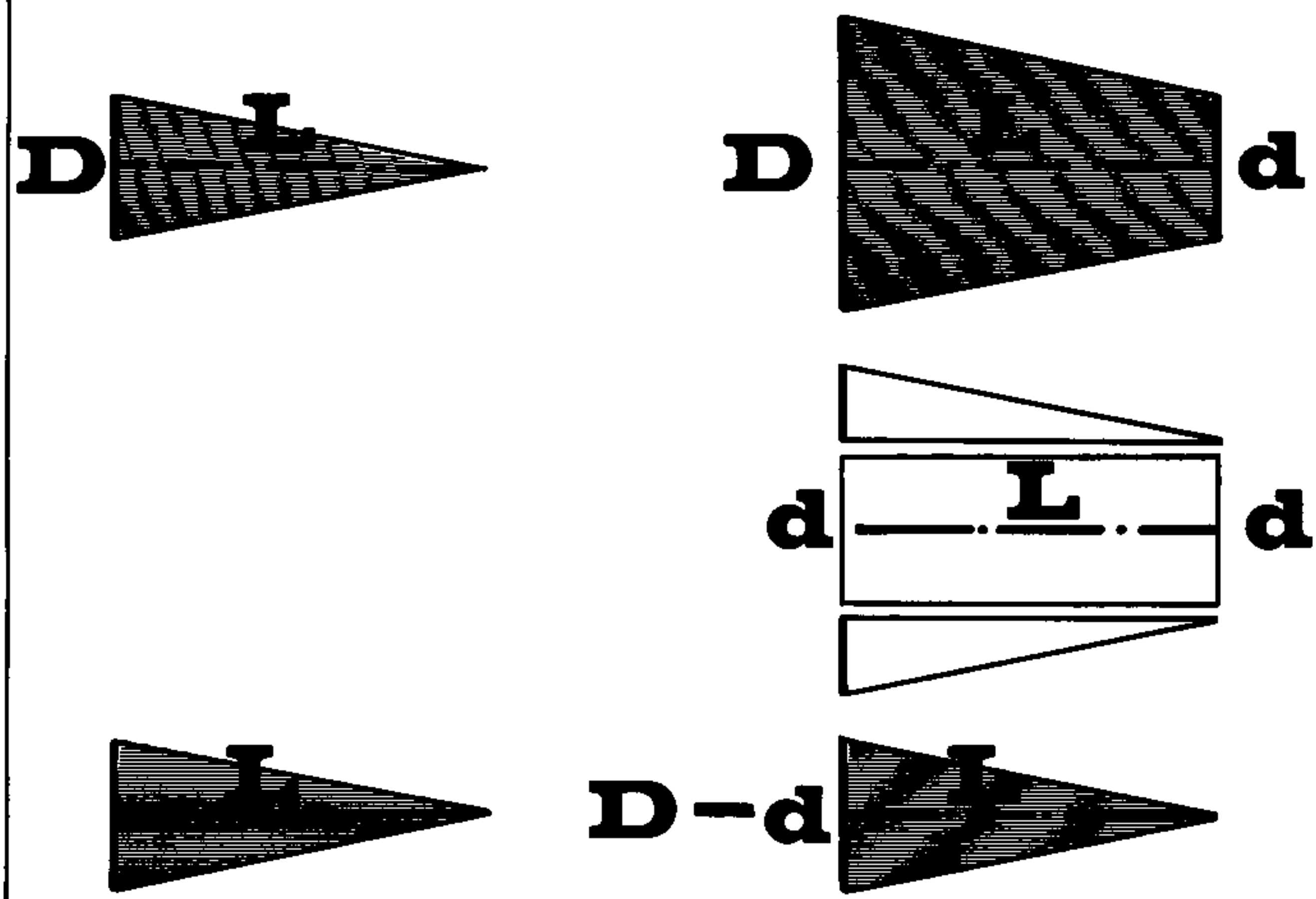

$C = \overline{}$

$C = \overline{}$

1. C = ?

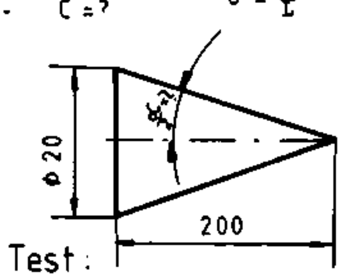

Test:

$C = \frac{D}{L}$

$C = \frac{20\cancel{mm}}{200\cancel{mm}}$

$\underline{\underline{C = 1 : 10}}$

$\tan\frac{\alpha}{2} = \frac{D}{2L}$

$\tan\frac{\alpha}{2} = \frac{20\cancel{mm}}{2 \cdot 200\cancel{mm}}$

$\tan\frac{\alpha}{2} = 0{,}05$

$\underline{\underline{\frac{\alpha}{2} = 2{,}86^\circ}}$

2. C = ?

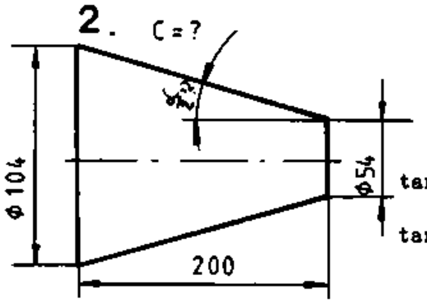

$C = \frac{D - d}{L}$

$C = \frac{104\cancel{mm} - 54\cancel{mm}}{200\cancel{mm}}$

$\underline{\underline{C = 1 : 4}}$

$\tan\frac{\alpha}{2} = \frac{C}{2}$

$\tan\frac{\alpha}{2} = \frac{0{,}25}{2} = 0{,}125$

$\underline{\underline{\frac{\alpha}{2} = 7{,}13^\circ}}$

a) C = ?

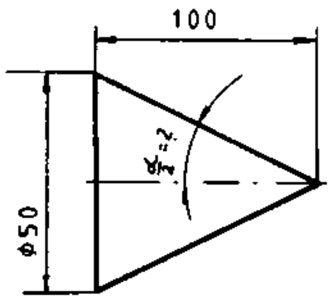

C = ☐

$\frac{\alpha}{2}$ = ☐ °

b)

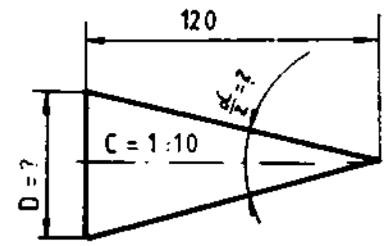

$\frac{\alpha}{2}$ = ☐ °

D = ☐ mm

c)

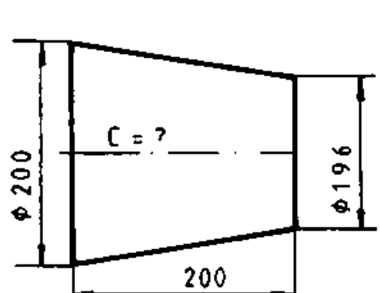

C = ☐

a) C = 1 : 2 , $\frac{\alpha}{2}$ = 14° b) D = 12mm , $\frac{\alpha}{2}$ = 2,86° c) C = 1 : 50

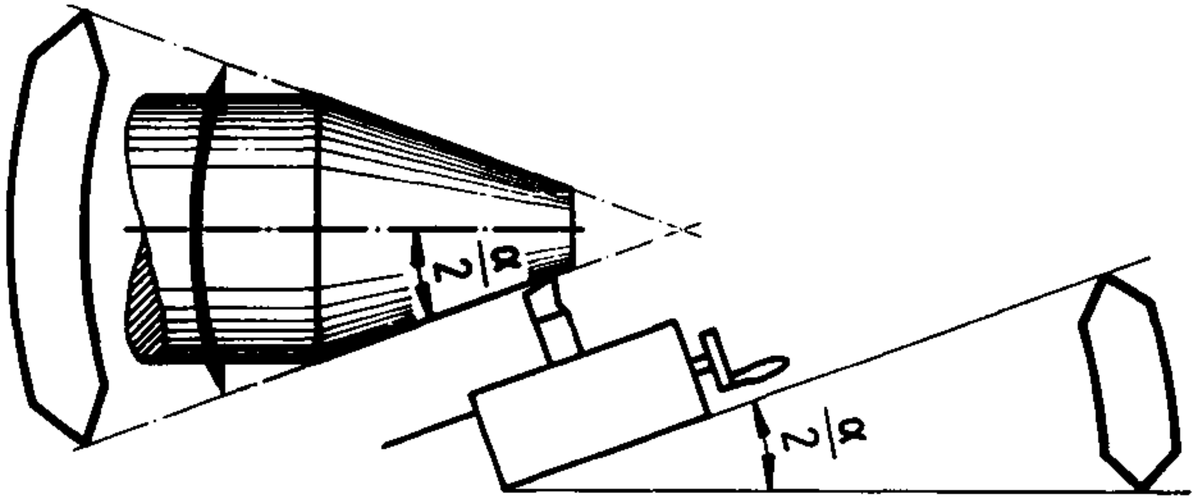

=

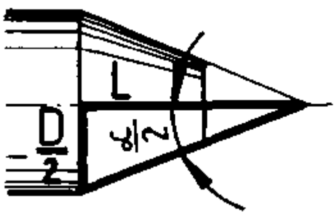

$$\tan\frac{\alpha}{2} = \text{——} = \text{——}$$

1.

$C = ?\ ;\ \frac{\alpha}{2} = ?$

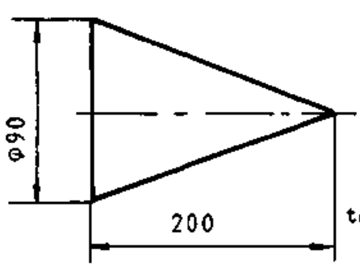

$C = \frac{D}{L}$

$C = \frac{90\,mm}{200\,mm}$

$\underline{\underline{C = 0{,}45}}$

$\tan\frac{\alpha}{2} = \frac{D}{2L}$

$\tan\frac{\alpha}{2} = \frac{90\,mm}{200\,mm \cdot 2}$

$\underline{\underline{\frac{\alpha}{2} = 12{,}68^\circ}}$

2.

$C = ?$

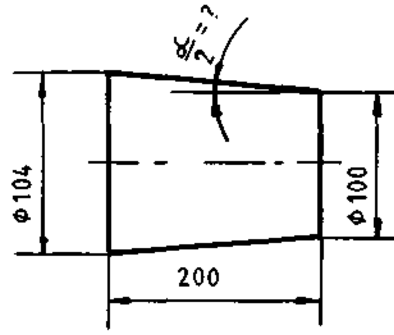

$C = \frac{D - d}{L}$

$C = \frac{104\,mm - 100\,mm}{200\,mm}$

$\underline{\underline{C = 1 : 50}}$

$\tan\frac{\alpha}{2} = \frac{C}{2}$

$\tan\frac{\alpha}{2} = \frac{1}{2 \cdot 50}$

$\tan\frac{\alpha}{2} = 0{,}01$

$\underline{\underline{\frac{\alpha}{2} = 0{,}5729^\circ}}$

Test

a)

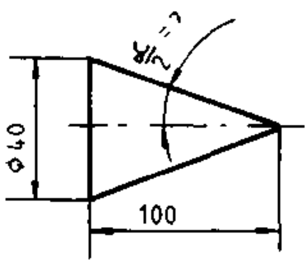

C =

$\frac{\alpha}{2} =$ °

b)

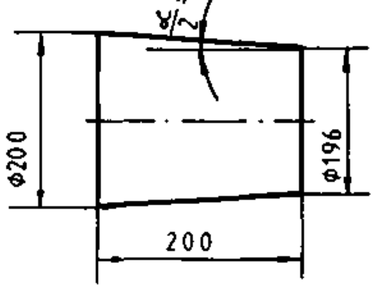

C =

$\frac{\alpha}{2} =$ °

c)

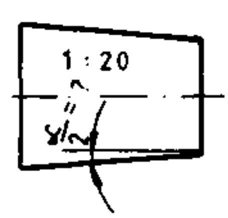

$\frac{\alpha}{2} =$ °

a) $C = 0{,}4$; $\frac{\alpha}{2} = 11{,}3^\circ$ b) $C = 1 : 50$; $\frac{\alpha}{2} = 0{,}5729^\circ$ c) $\frac{\alpha}{2} = 1{,}43^\circ$

(1)

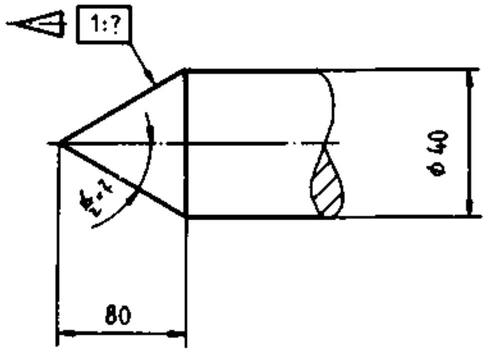

$\frac{\alpha}{2}$ = ______ °   1 : ______

(2)

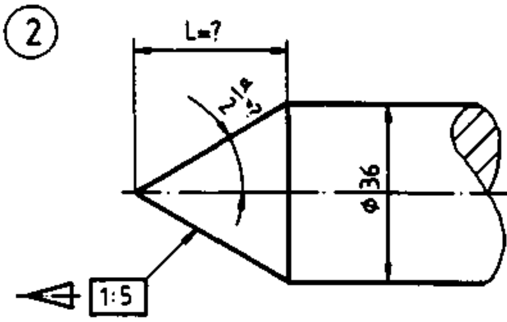

L = ______ mm $\frac{\alpha}{2}$ = ______ °

(3)

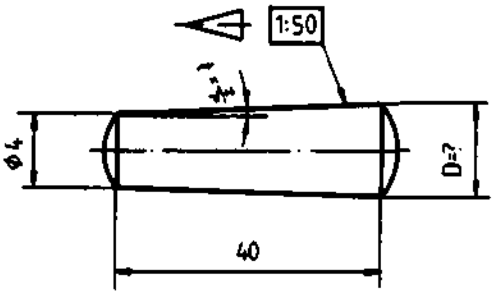

D = ______ mm $\frac{\alpha}{2}$ = ______ °

(4)

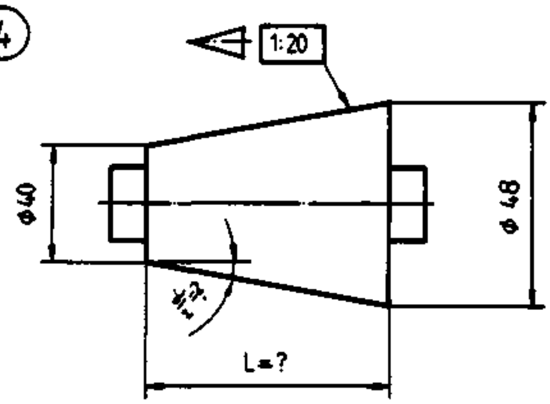

L = ______ mm $\frac{\alpha}{2}$ = ______ °

(5)

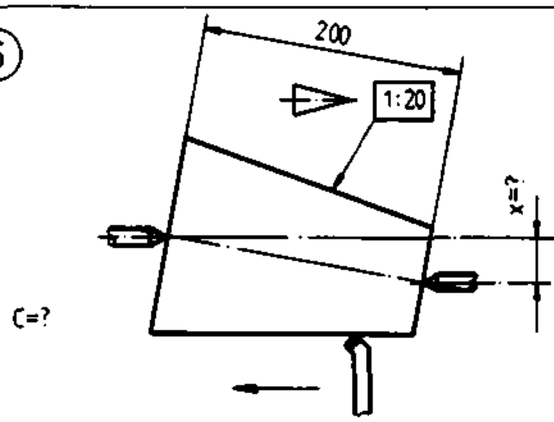

C = ______   X = ______ mm

(6)

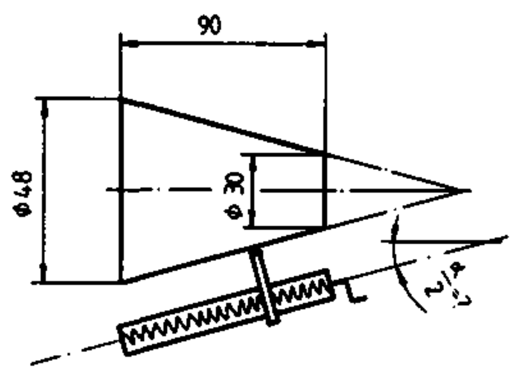

C = ______ $\frac{\alpha}{2}$ = ______ °

(7)

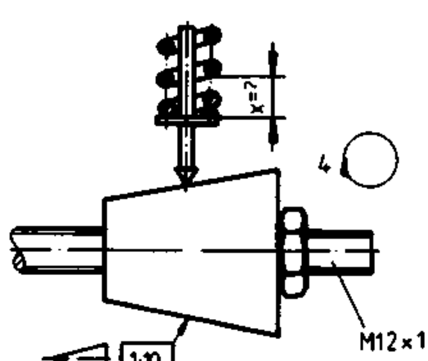

X = ______ mm

(8)

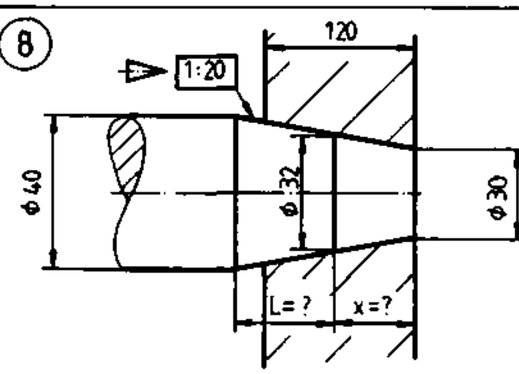

X = ______ mm   L = ______ mm

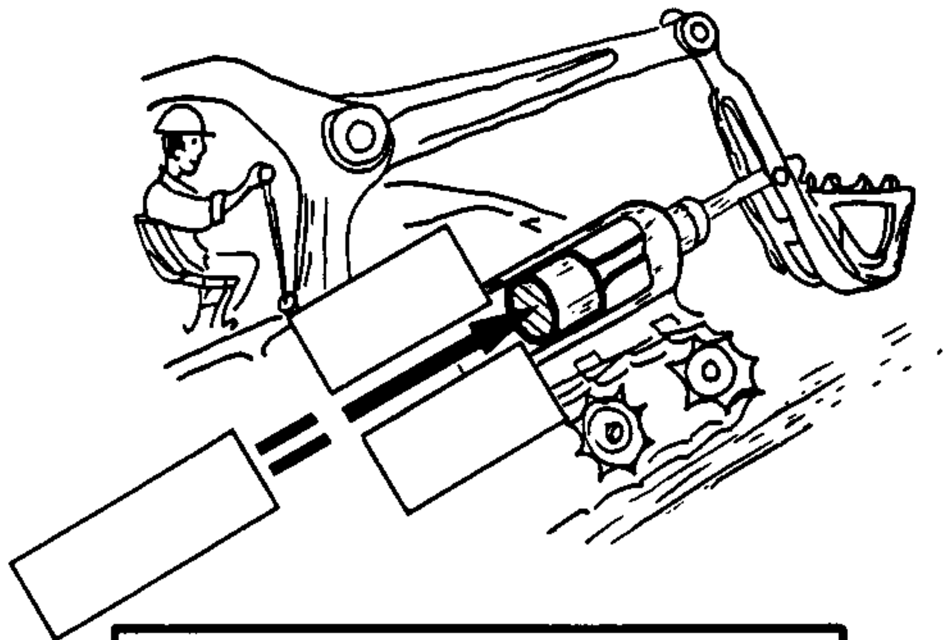

=

p =

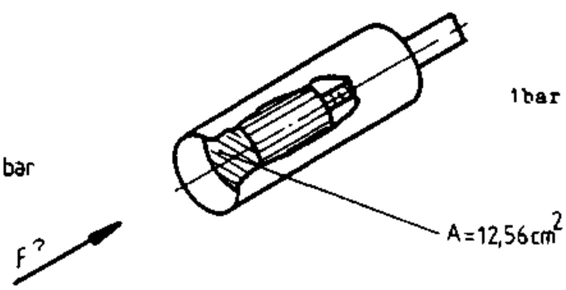

1 bar = $1 \frac{daN}{cm^2}$

$p = \frac{F}{A}$

$F = p \cdot A$

$F = 30 \frac{daN}{\cancel{cm^2}} \cdot 12{,}56 \cancel{cm^2}$

$\underline{\underline{F = 377 daN}}$

Test:

a)	b)	c)
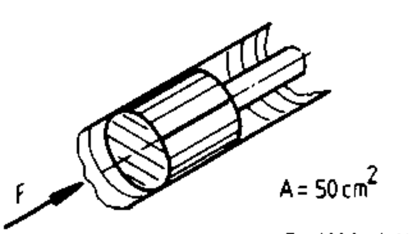 p = ? A = 50 cm² F = 1000 daN	 A = 100 cm² p = ? F = 1000 daN	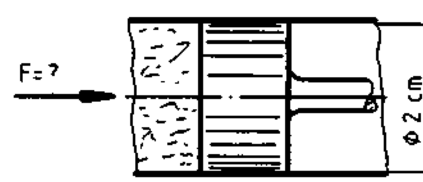 p = 20 bar
p = ☐ $\frac{daN}{cm^2}$	p = ☐ bar	F = ☐ daN

a) $p = 20\ daN/cm^2$ b) p = 10 bar c) F = 62,8 daN

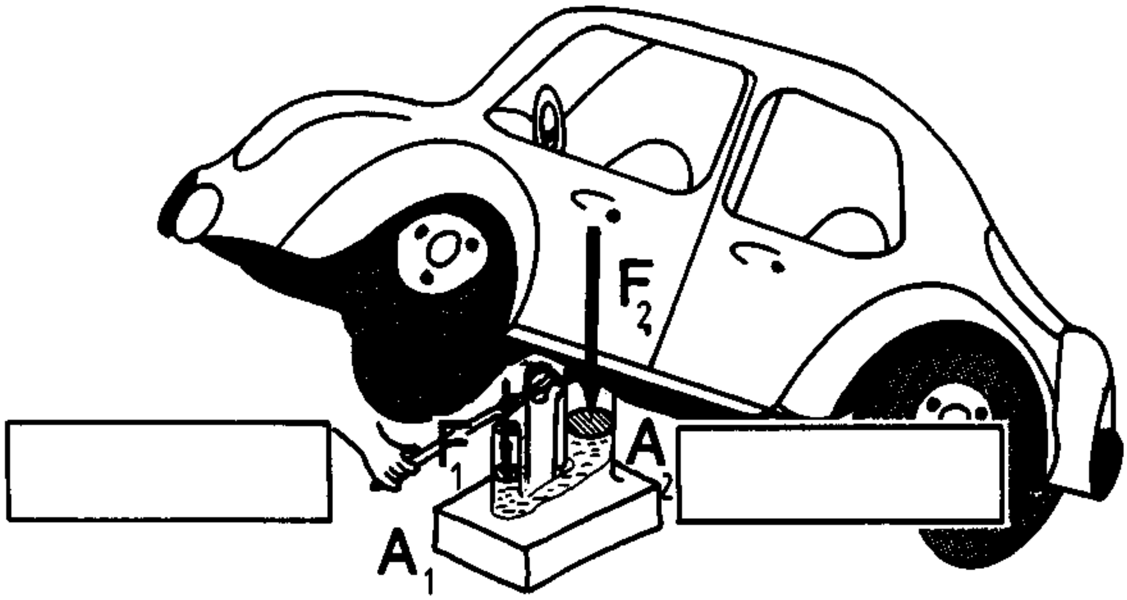

$$p_1 = p_2$$

$$\frac{F_1}{A_1} = \underline{\qquad}$$

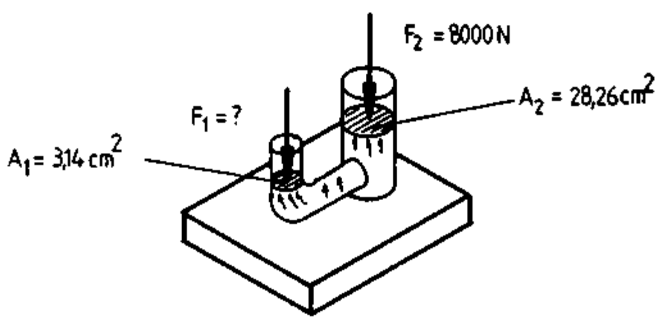

$$\frac{F_1}{A_1} = \frac{F_2}{A_2}$$

$$F_1 = \frac{F_2 \cdot A_1}{A_2}$$

$$F_1 = \frac{8000\,N \cdot 3,14\,\cancel{cm^2}}{28,26\,\cancel{cm^2}}$$

$$\underline{\underline{F_1 = 889 N}}$$

a)

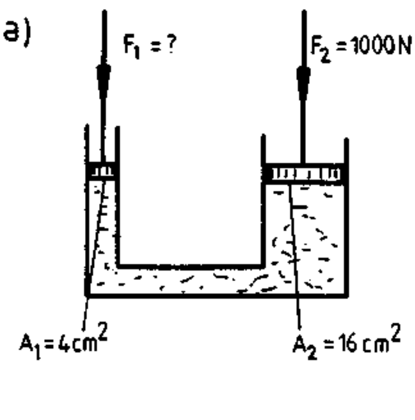

b)

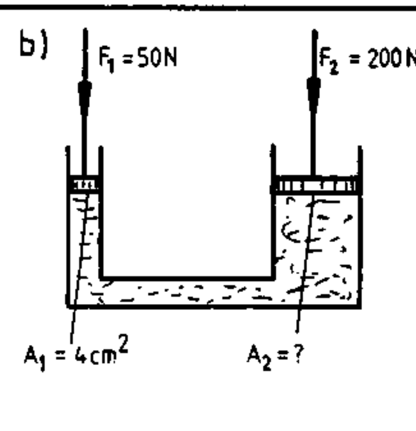

c)

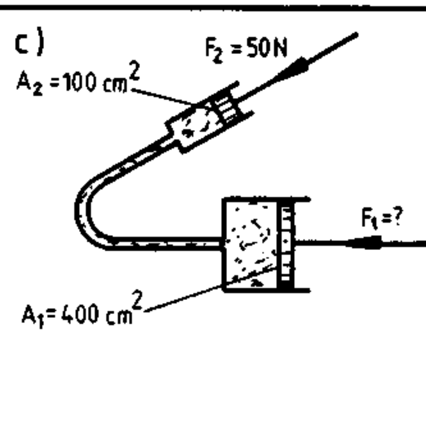

F_1 = ☐ N	A_2 = ☐ cm^2	F_1 = ☐ N

c) F_1 = 200N   b) A_2 = 16cm²   a) F_1 = 250 N

(1)

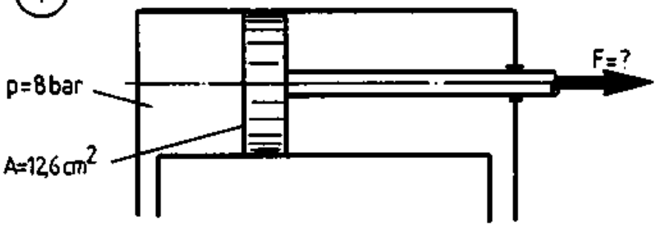

F = [ ] N

(2)

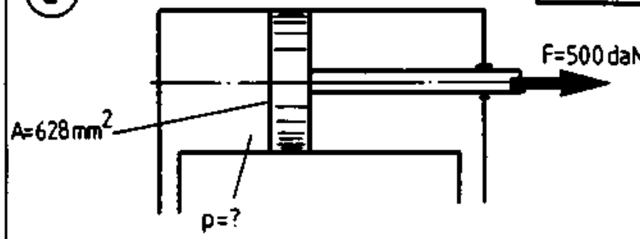

p = [ ] bar

(3)

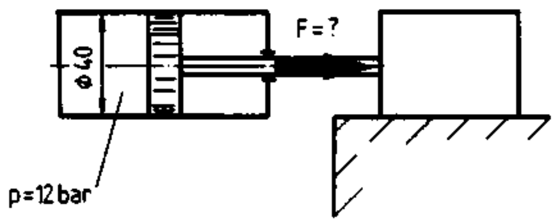

F = [ ] daN

(4)

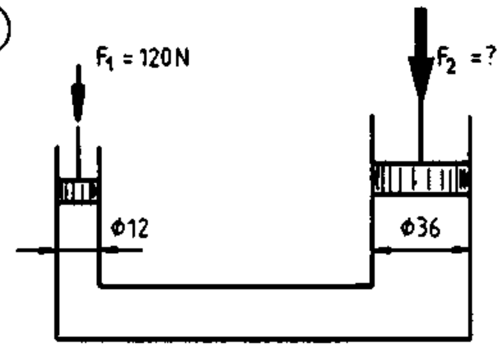

F_2 = [ ] N

(5)

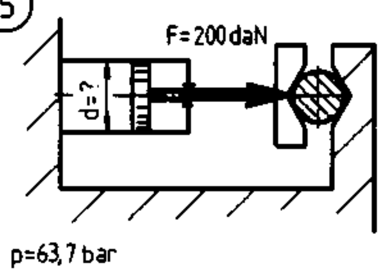

d = [ ] mm

(6)

F=?

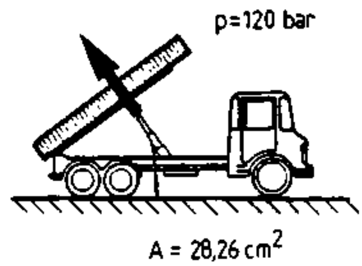

F = [ ] kN

(7)

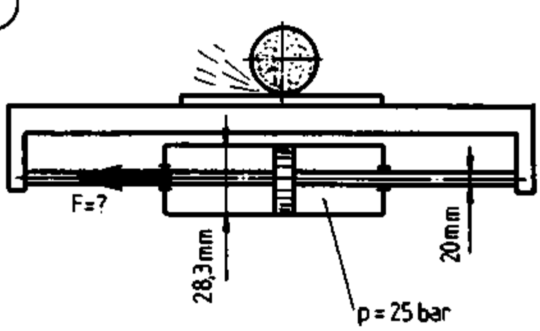

F = [ ] daN

(8)

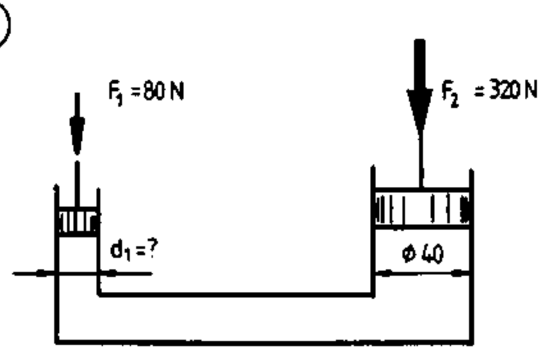

d_1 = [ ] mm ; p = [ ] bar

(9)

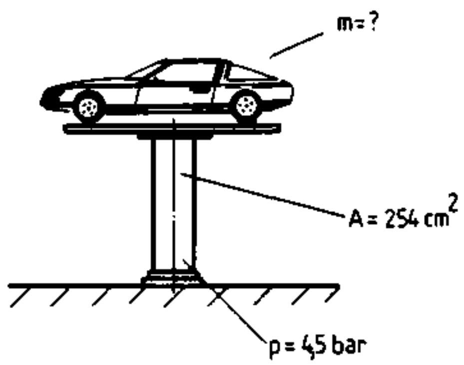

m = ______ kg

(10)

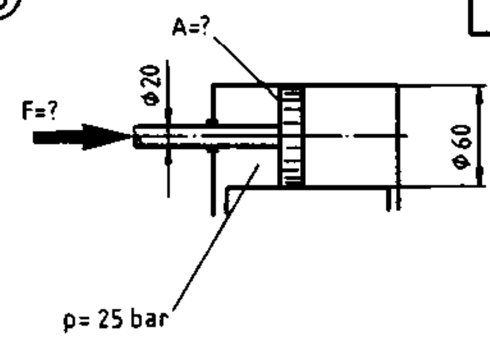

A = ______ cm² ; F = ______ daN

(11)

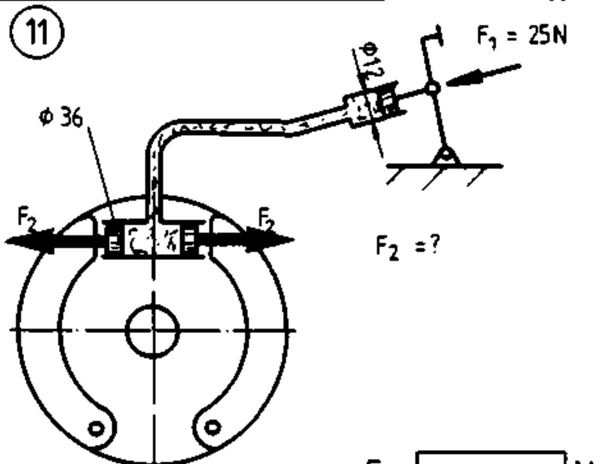

F_2 = ______ N

(12)

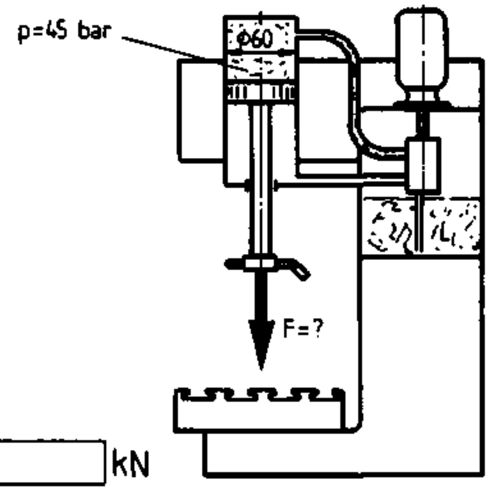

F = ______ kN

(13)

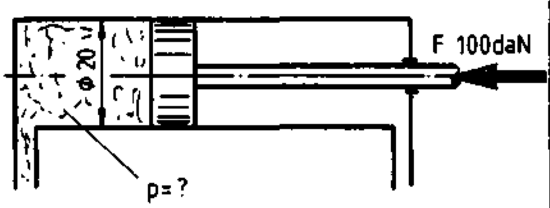

p = ______ bar

(14)

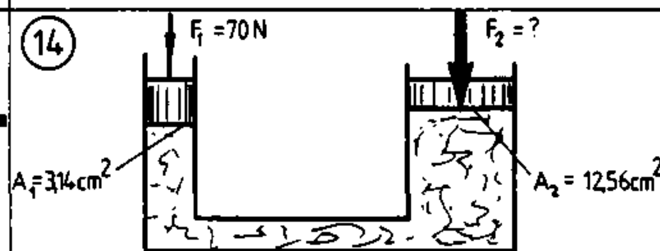

F_2 = ______ N

(15)

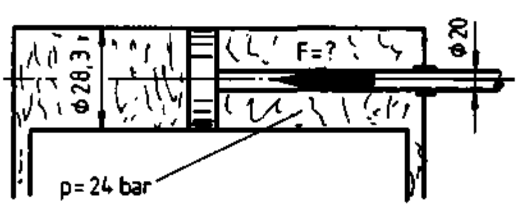

F = ______ N

(16)

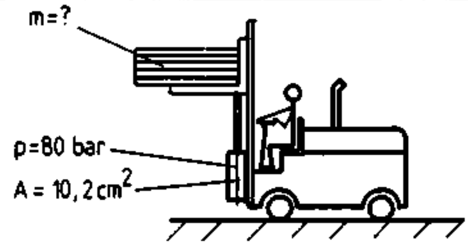

m = ______ kg

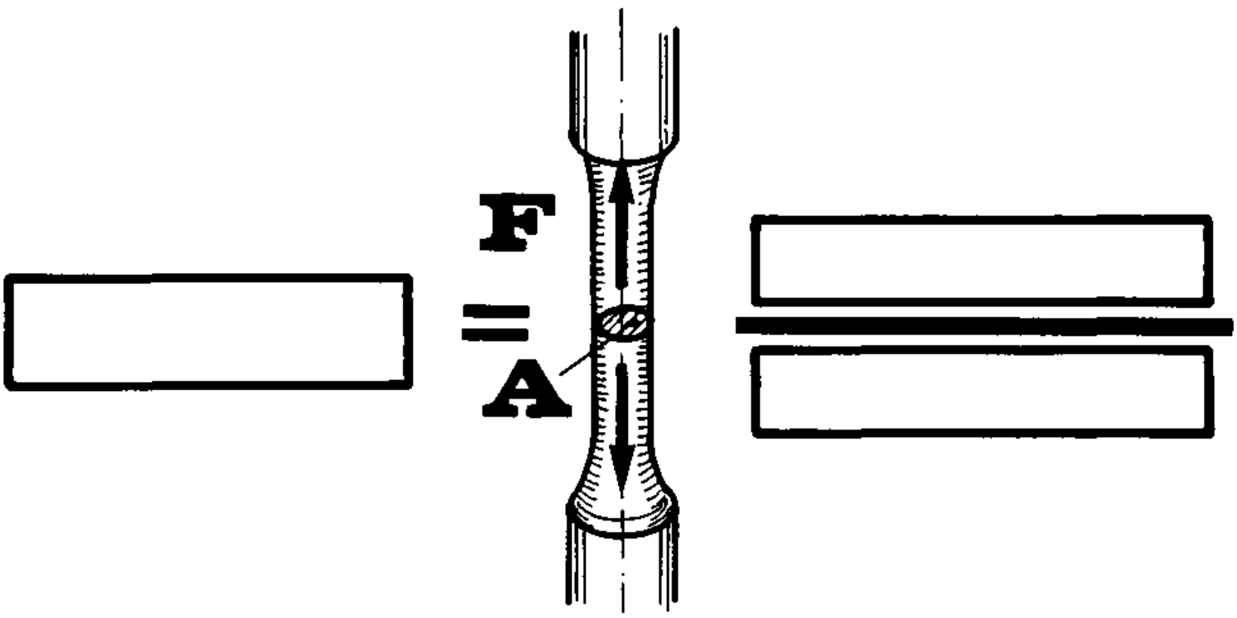

$$\sigma = \_\_\_\_$$

1\.

F = 10000 N

A = 78,5 mm²

σ = ?

$\sigma = \frac{F}{A}$

$\sigma = \frac{10000N}{78,5mm^2}$

$\sigma = 127 \frac{N}{mm^2}$

2\.

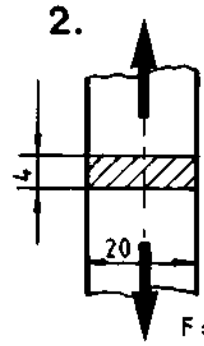

$\sigma = 100 \frac{N}{mm^2}$

F = ?

$\sigma = \frac{F}{A}$

$F = \sigma \cdot A$

$F = 100 \frac{N}{\cancel{mm^2}} \cdot 4\cancel{mm} \cdot 20\cancel{mm}$

$F = 8000N$

Test :

a)

F = 314 N

A = 3,14 mm²

σ = ?

$\sigma = \boxed{} \frac{N}{mm^2}$

b)

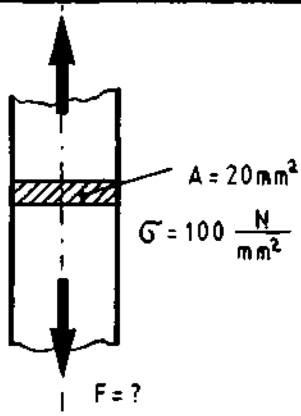

$\sigma = 100 \frac{N}{mm^2}$

F = ?

$F = \boxed{}$ N

c)

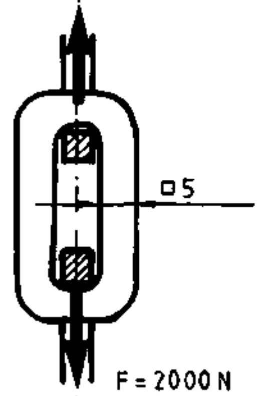

A = ?

σ = ?

F = 2000 N

$A = \boxed{}\ mm^2;\ \sigma = \boxed{} \frac{N}{mm^2}$

a) $\sigma = 100 \frac{N}{mm^2}$ b) F = 2000N c) A = 50mm², $\sigma = 40 \frac{N}{mm^2}$

gtz		40.2

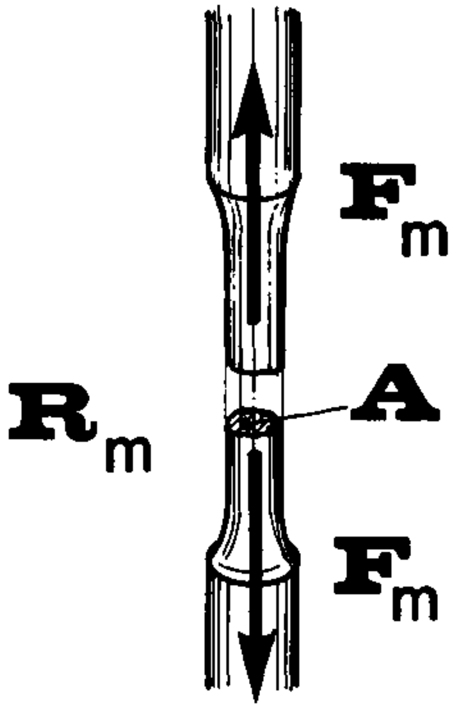

$$= \text{———}$$

1.

$$\boxed{R_m = \text{——}}$$

A = 78,5 mm²

R_m = 370 $\frac{N}{mm^2}$

F_m = ?

$R_m = \frac{F_m}{A}$

$F_m = R_m \cdot A$

$F_m = 370 \frac{N}{mm^2} \cdot 78,5 mm^2$

F_m = 29045N

2.

$$\delta = \frac{R_m}{\nu}$$

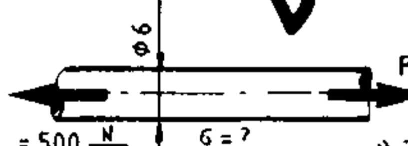

R_m = 500 $\frac{N}{mm^2}$ σ = ? ν = 5

$\sigma = \frac{R_m}{\nu}$

$\sigma = \frac{500N}{5mm^2}$

σ = 100mm²

$\sigma = \frac{F}{A}$

$F = \sigma \cdot A$

$F = 100 \frac{N}{mm^2} \cdot 6^2 mm^2 \cdot \frac{3,14}{4}$ F = 2826N

Test:

a)

St 50

R_m = ?

A = 19,6 mm²

F_m = ?

b)

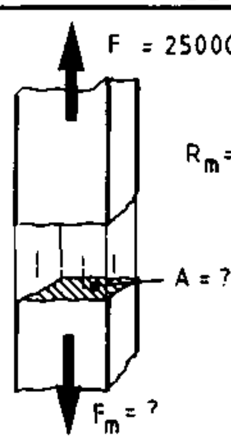

R_m = 500 $\frac{N}{mm^2}$

c)

$\sigma = \frac{R_m}{3}$

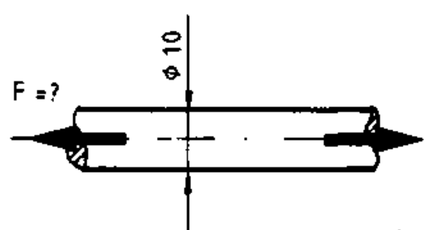

A = ?

R_m = 370 $\frac{N}{mm^2}$

R_m = ☐ $\frac{N}{mm^2}$; F_m = ☐ kN	A = ☐ mm²	A = ☐ mm² F = ☐ N

a) R_m = 500 $\frac{N}{mm^2}$, F_m = 9800N   b) A = 50 mm²   c) A = 78,5mm² , F = 9682N

1

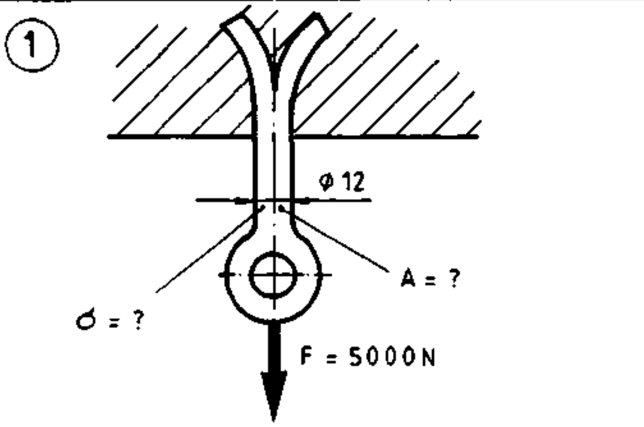

A = ______ mm² ; σ = ______ $\frac{N}{mm^2}$

2

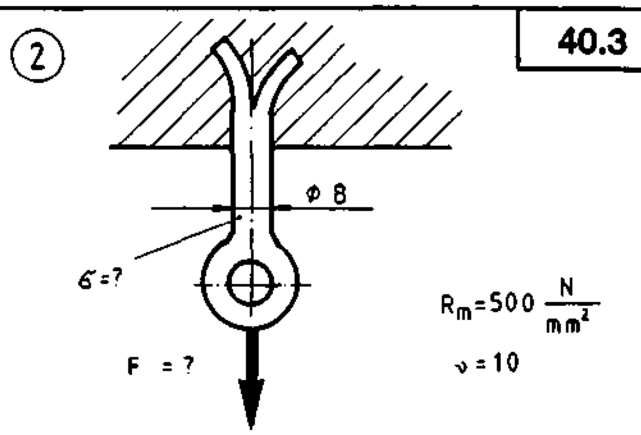

σ = ______ $\frac{N}{mm^2}$; F = ______ N

3

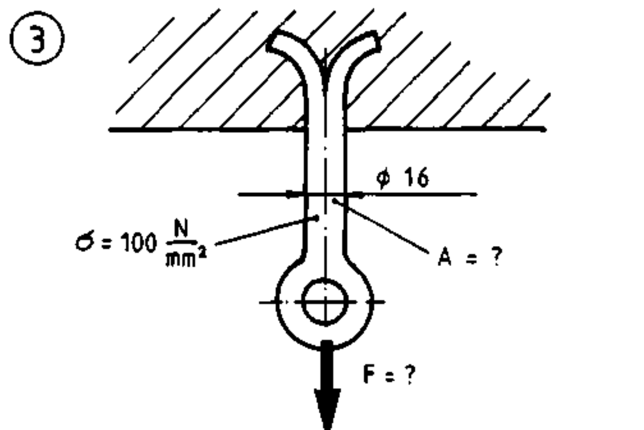

A = ______ mm² ; F = ______ kN

4

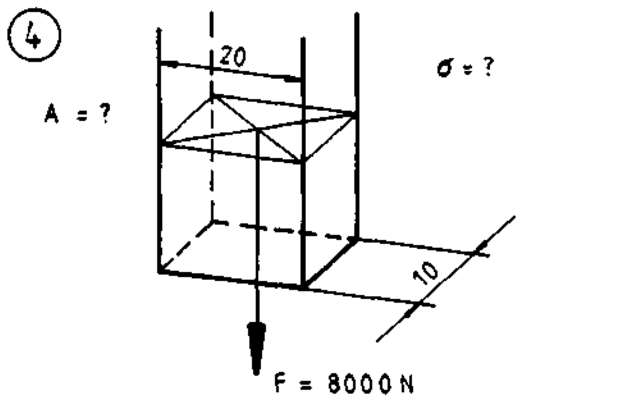

A = ______ mm² ; σ = ______ $\frac{N}{mm^2}$

5

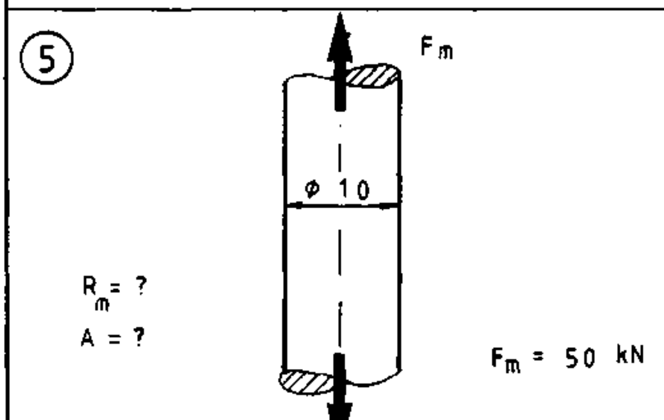

A = ______ mm² ; R_m = ______ $\frac{N}{mm^2}$

6

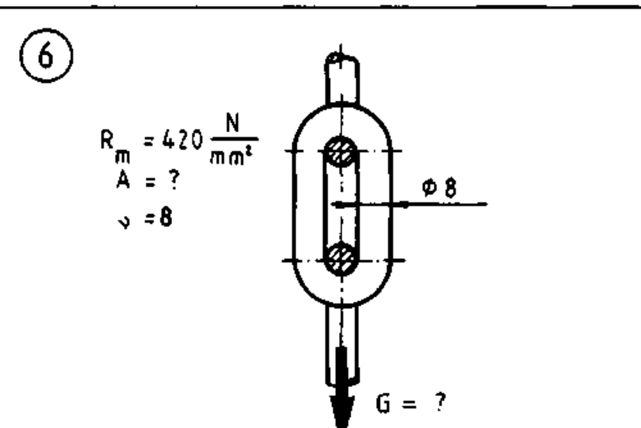

A = ______ mm² ; G = ______ N

7

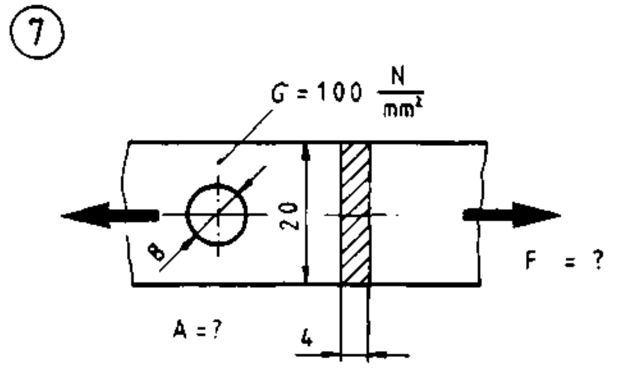

A = ______ mm² ; F = ______ N

8

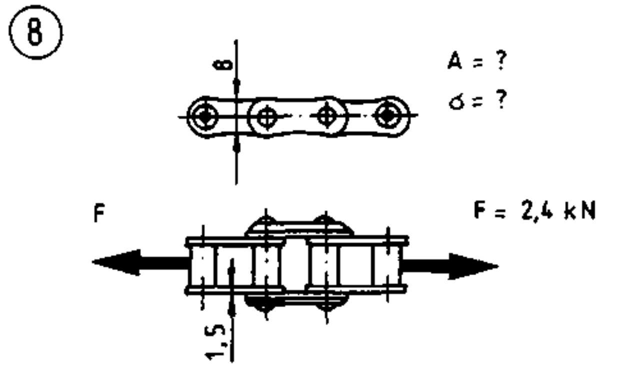

A = ______ mm² ; σ = ______ $\frac{N}{mm^2}$

(9)

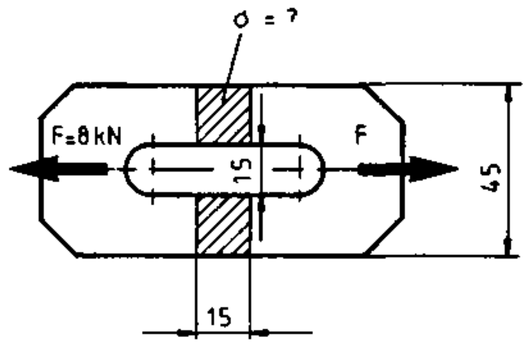

$\sigma = \boxed{}\ \frac{N}{mm^2}$

(10)

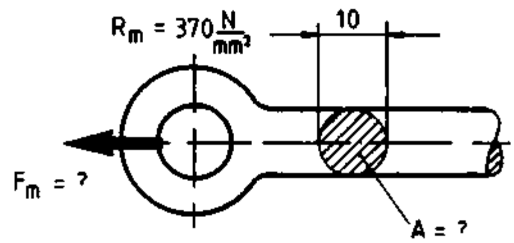

$A = \boxed{}\ mm^2$; $F_m = \boxed{}\ N$

(11)

$\sigma = 85\ \frac{N}{mm^2}$

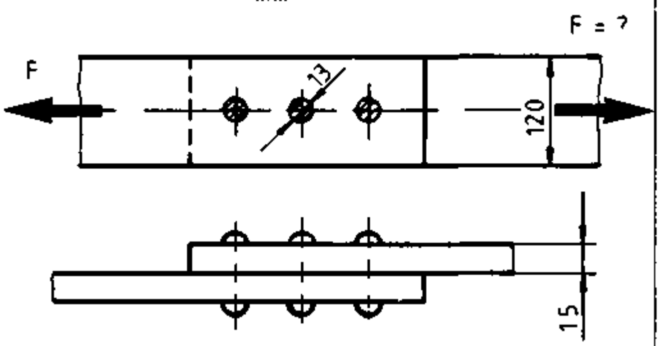

$F = \boxed{}\ kN$

(12)

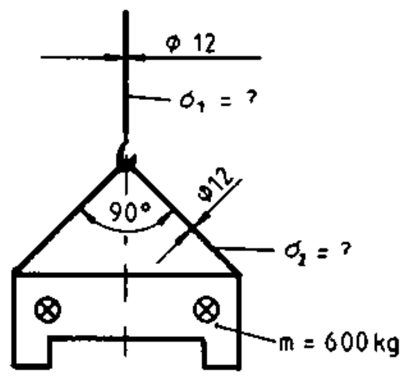

$\sigma_1 = \boxed{}\ \frac{N}{mm^2}$; $\sigma_2 = \boxed{}\ \frac{N}{mm^2}$

(13)

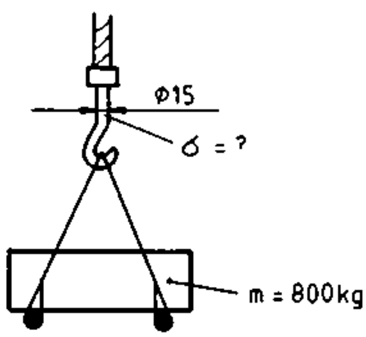

$\sigma = \boxed{}\ \frac{N}{mm^2}$

(14)

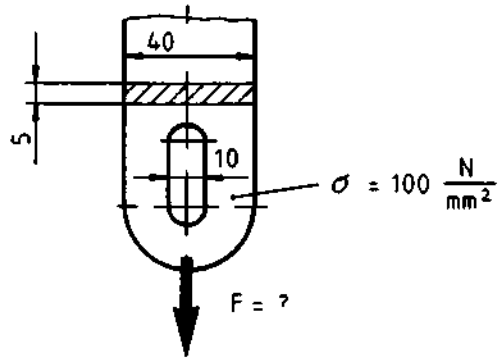

$F = \boxed{}\ N$

(15)

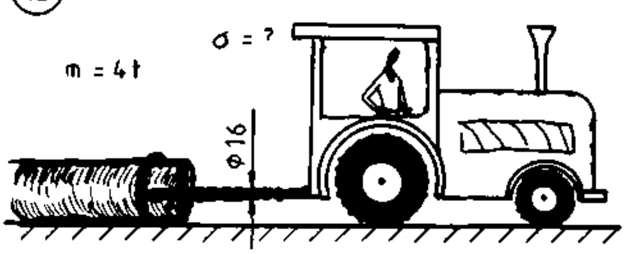

$\mu = 0{,}3$

$\sigma = \boxed{}\ \frac{N}{mm^2}$

(16)

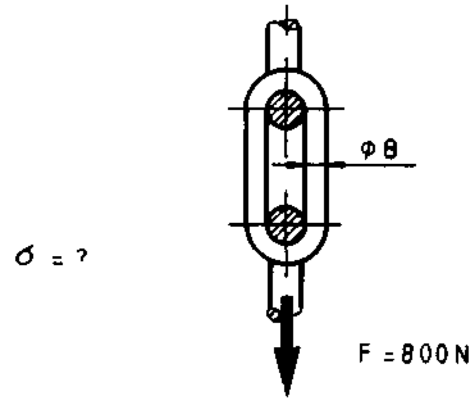

$\sigma = \boxed{}\ \frac{N}{mm^2}$

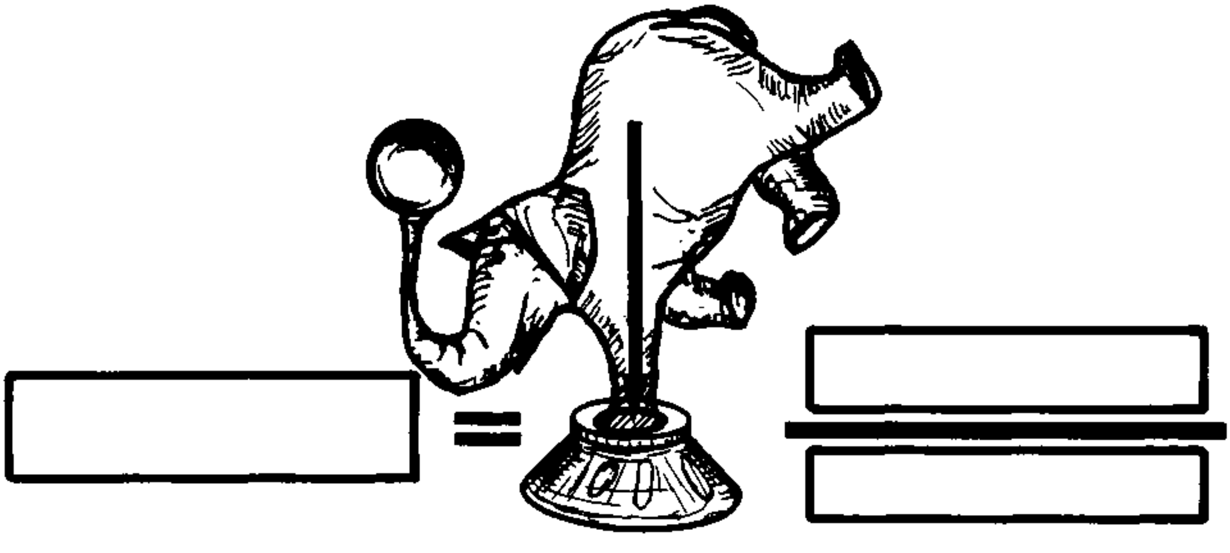

$$= \underline{\qquad\qquad}$$

$$\mathbf{p} = \underline{\qquad}$$

1.

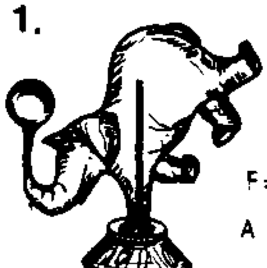

F = 80 kN
A = 300 cm²
p = ?

$p = \frac{F}{A}$

$p = \frac{80000\,N}{300\,cm^2}$

$p = 267 \frac{N}{cm^2}$

2.

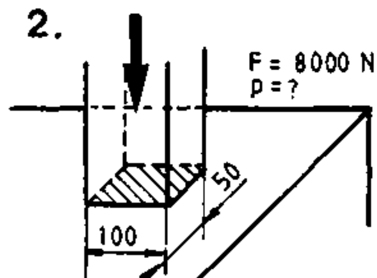

F = 8000 N
p = ?

$p = \frac{F}{A}$

$A = 10\,cm \cdot 5\,cm$

$A = 50\,cm^2$

$p = \frac{8000\,N}{50\,cm^2}$

$p = 160 \frac{N}{cm^2}$

Test:

a)

F = 50 kN
A = 500 cm²
p = ?

$p = \boxed{\quad} \frac{N}{cm^2}$

b)

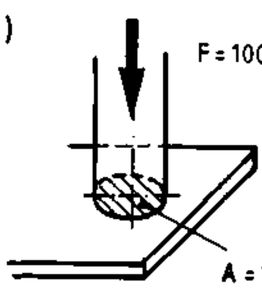

F = 1000 N
A = 100 mm²
p = ?

$p = \boxed{\quad} \frac{N}{mm^2}$

c)

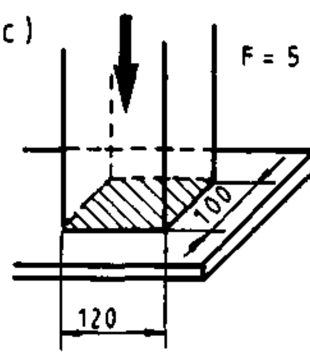

F = 5 kN
p = ?

$p = \boxed{\quad} \frac{N}{cm^2}$

a) $p = 100\ N/cm^2$ b) $p = 10\ N/mm^2$ c) $p = 42\ N/cm^2$

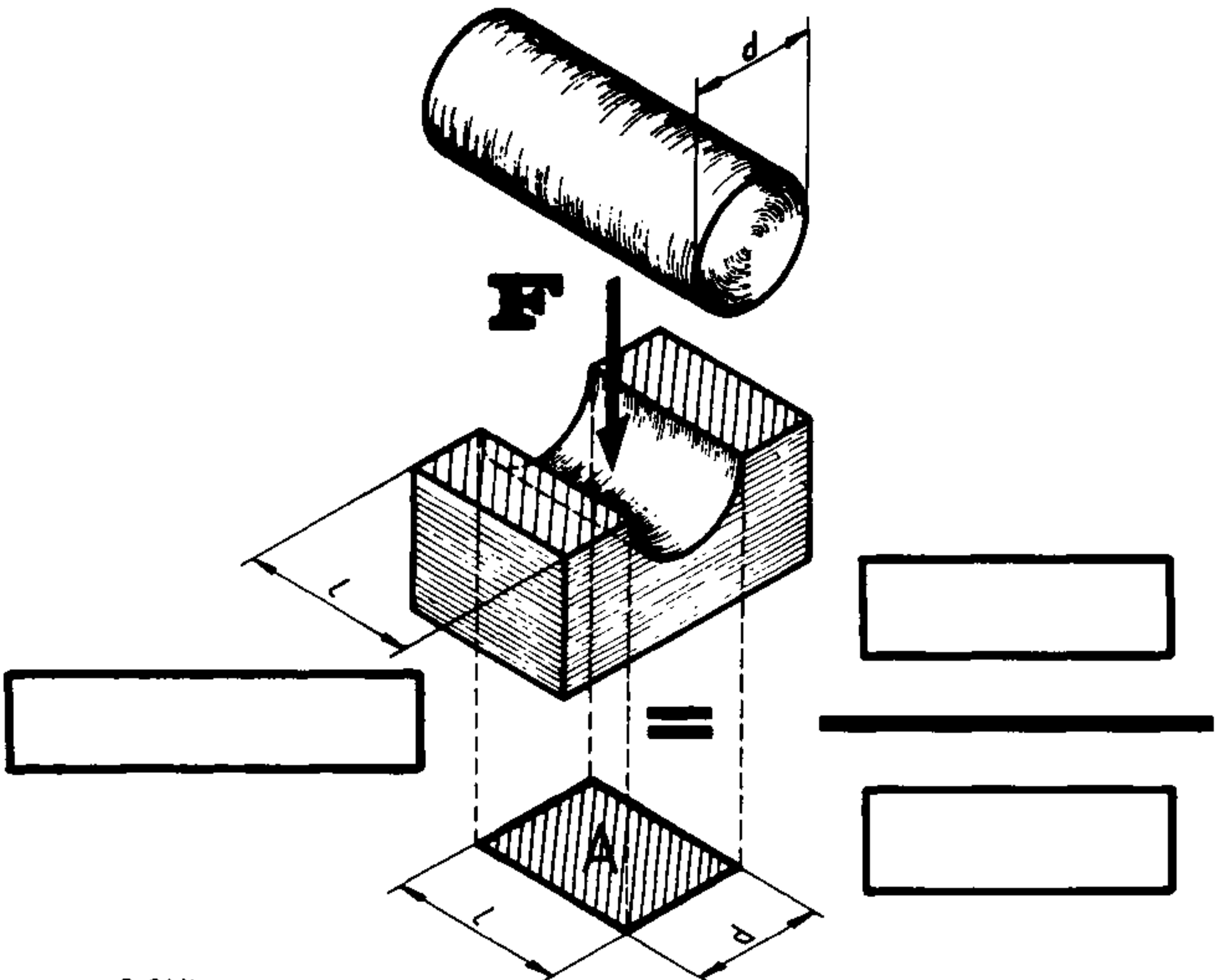

1.

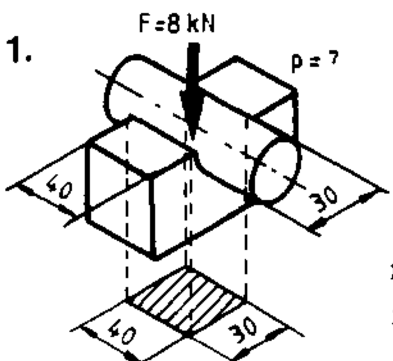

$$p = \text{———}$$

$p = \frac{F}{A}$

$p = \frac{8000N}{3cm \cdot 4cm}$

$p = 667 \frac{N}{cm^2}$

2.

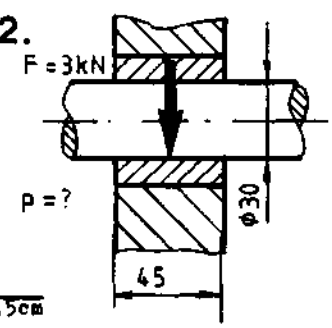

$p = \frac{F}{A}$

$p = \frac{3000N}{3cm \cdot 4,5cm}$

$p = 222 \frac{N}{cm^2}$

Test:

a)

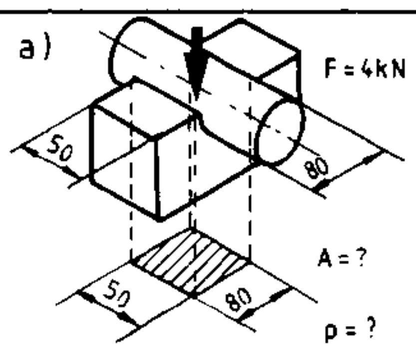

b)

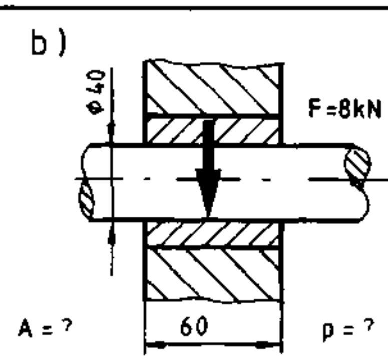

c)

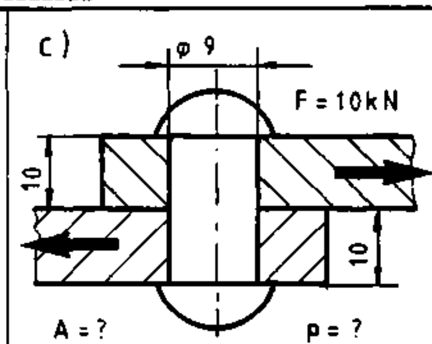

a)	b)	c)
A = ____ mm^2	A = ____ mm^2	A = ____ mm^2
p = ____ $\frac{N}{mm^2}$	p = ____ $\frac{N}{mm^2}$	p = ____ $\frac{N}{mm^2}$

a) A = $4000mm^2$, p = 1 N/mm^2 b) A = $2400mm^2$, p = 3,3 N/mm^2 c) A = $90mm^2$, p = 111 N/mm^2

(1)

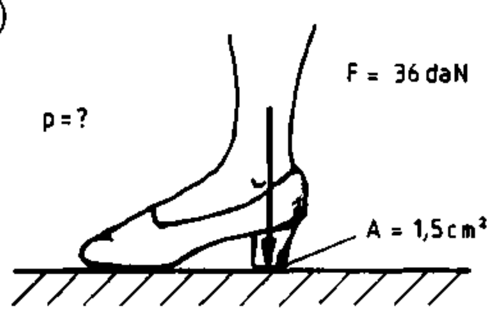

p = ☐ $\frac{N}{cm^2}$

(2)

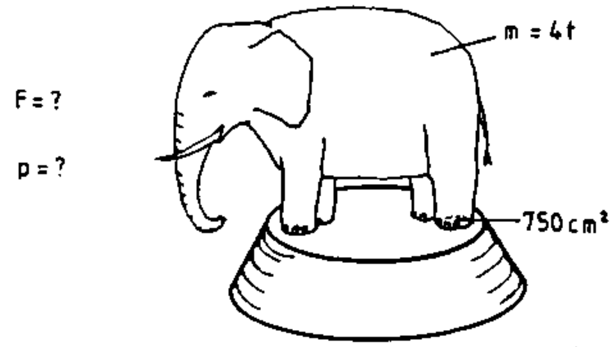

F = ☐ N p = ☐ $\frac{N}{cm^2}$

(3)

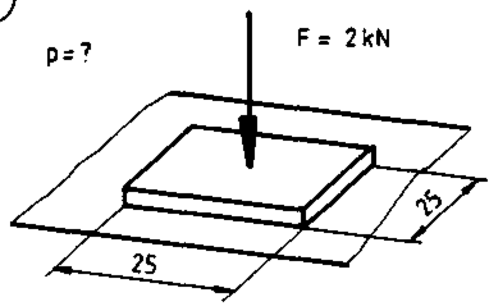

p = ☐ $\frac{N}{cm^2}$

(4)

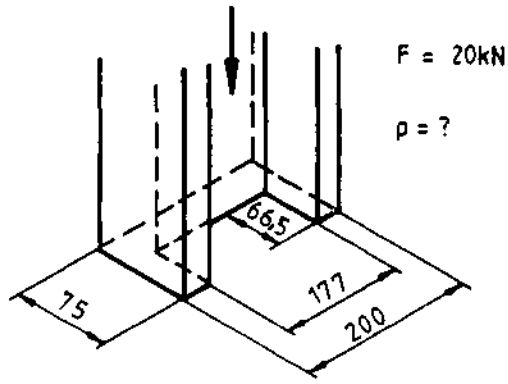

p = ☐ $\frac{N}{mm^2}$

(5)

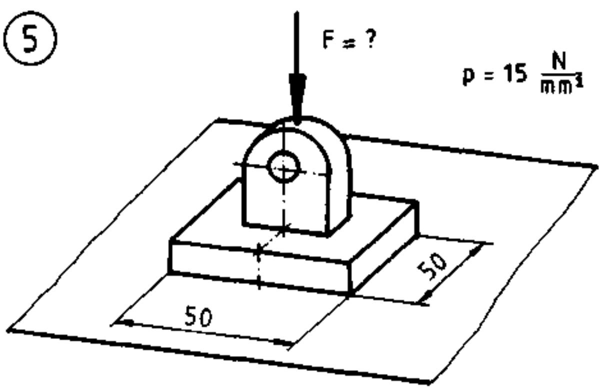

F = ☐ daN

(6)

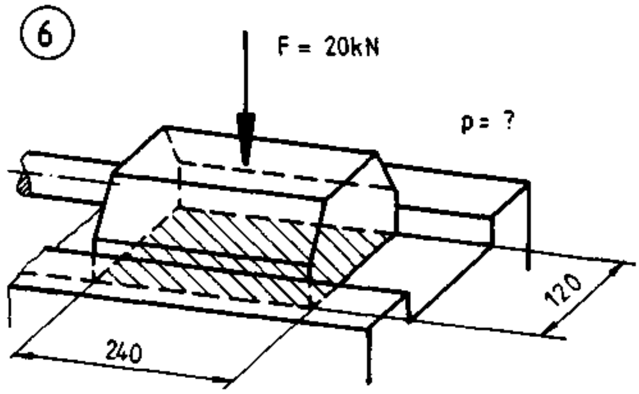

p = ☐ $\frac{N}{cm^2}$

(7)

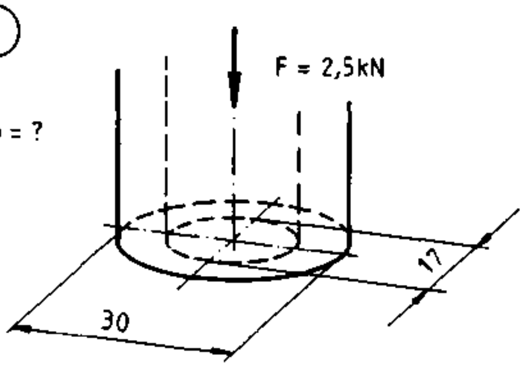

p = ☐ $\frac{N}{mm^2}$

(8)

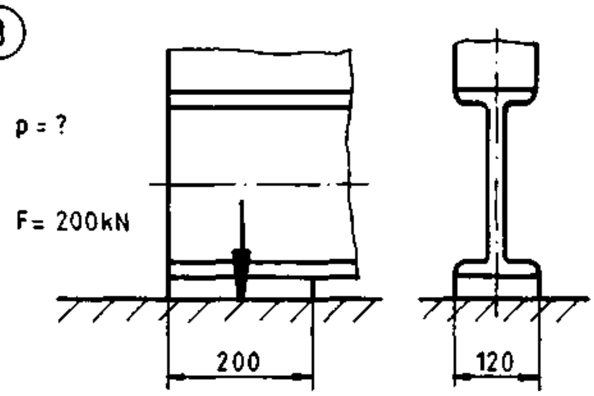

p = ☐ $\frac{daN}{cm^2}$

(1)

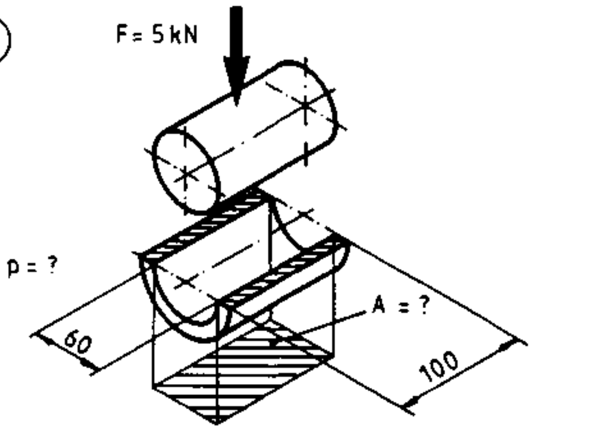

A = [ ] mm^2; p = [ ] $\frac{N}{mm^2}$

(2)

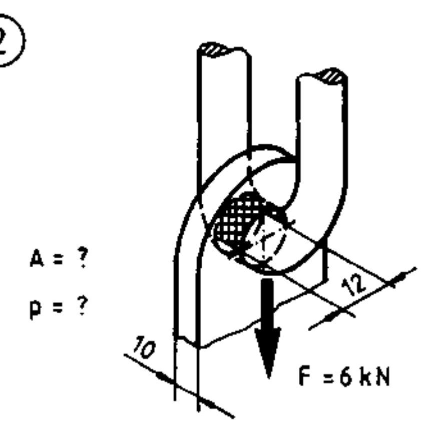

A = [ ] mm^2; p = [ ] $\frac{N}{mm^2}$

(3)

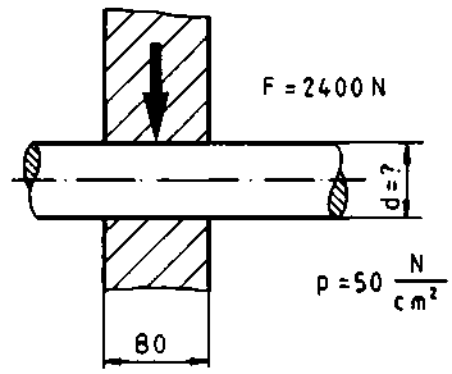

d = [ ] mm

(4)

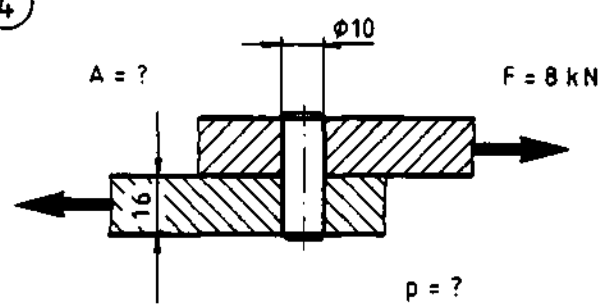

A = [ ] mm^2 ; p = [ ] $\frac{N}{mm^2}$

(5)

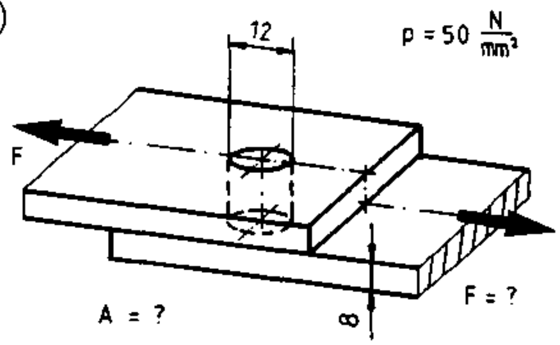

A = [ ] mm^2 ; F = [ ] kN

(6)

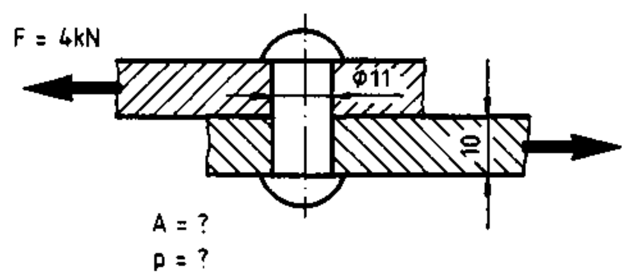

A = [ ] mm^2; p = [ ] $\frac{N}{mm^2}$

(7)

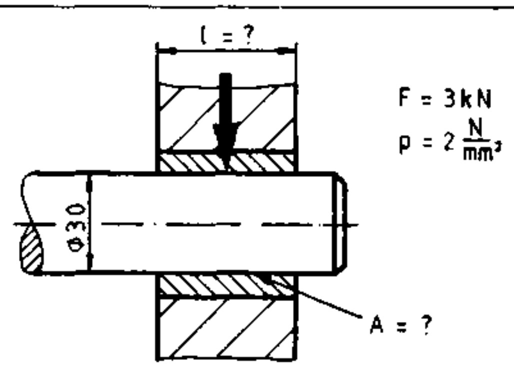

A = [ ] mm^2 ; l = [ ] mm

(8)

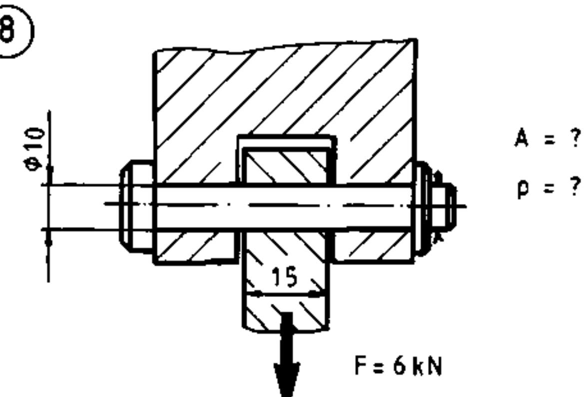

A = [ ] mm^2; p = [ ] $\frac{N}{mm^2}$

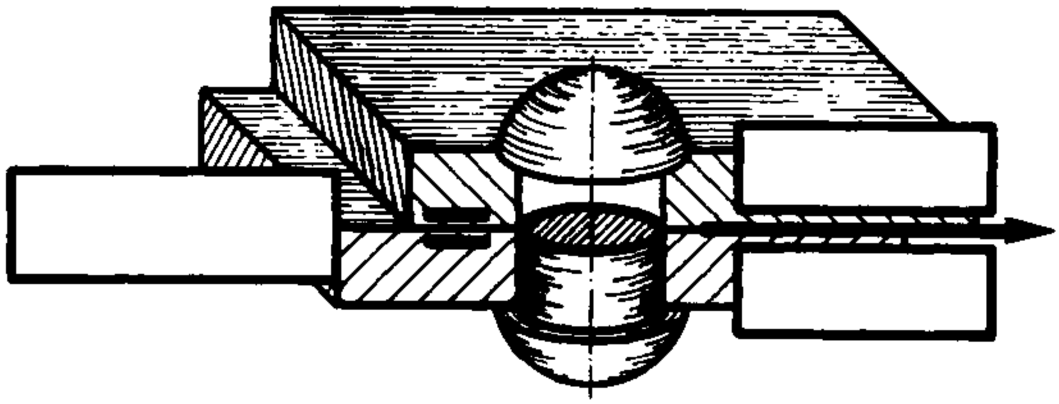

= ——

τ = ——

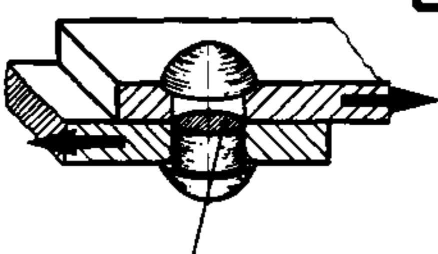

F = 10000 N

τ = ?

$\tau = \frac{F}{A}$

$\tau = \frac{10000 N}{63{,}6 mm^2}$

$\tau = 157 \frac{N}{mm^2}$

Test:

a)

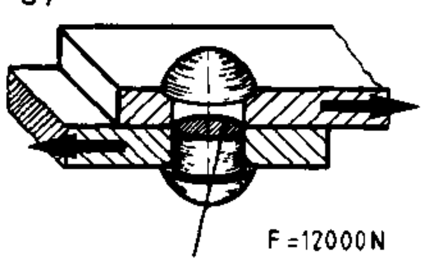

τ = [ ] $\frac{N}{mm^2}$

b)

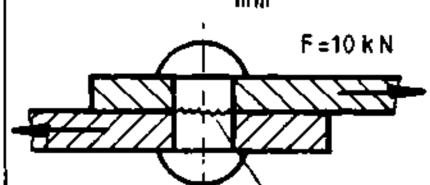

A = [ ] mm²

c)

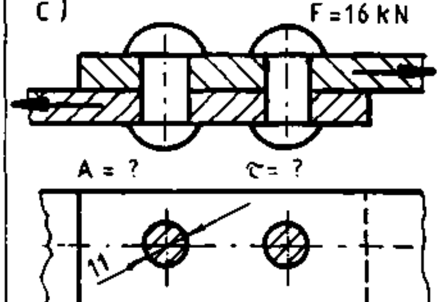

A = [ ] mm²

τ = [ ] $\frac{N}{mm^2}$

a) $\tau = 90 \frac{N}{mm^2}$ 42.1 b) A = 63,5 mm² c) A = 190 mm², $\tau = 84 \frac{N}{mm^2}$

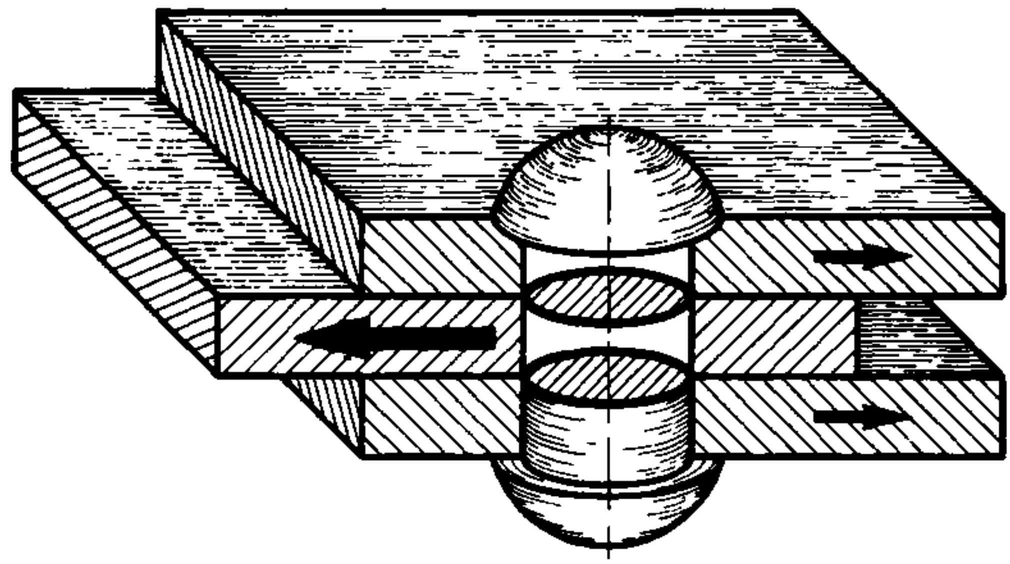

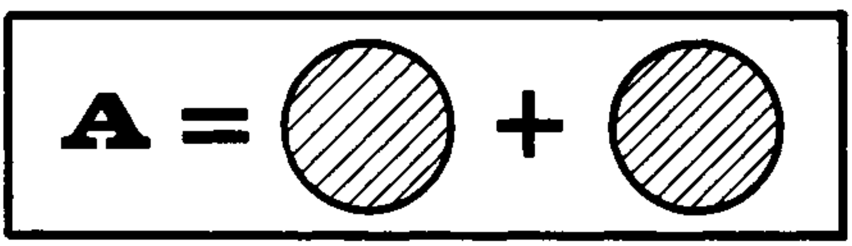

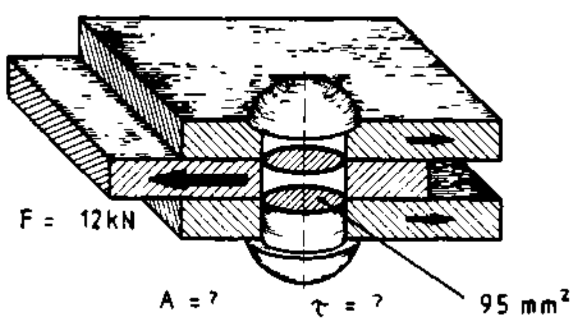

$A = 2 \cdot 95\,mm^2$ $\quad \tau = \frac{F}{A}$

$\underline{\underline{A = 190\,mm^2}}$ $\quad \tau = \frac{12000\,N}{190\,mm^2}$

$\underline{\underline{\tau = 63\,\frac{N}{mm^2}}}$

Test.

a) A = ? τ = ?

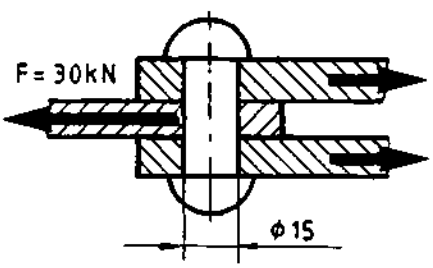

A = [ ] mm^2

τ = [ ] $\frac{N}{mm^2}$

b) A = ? τ = ?

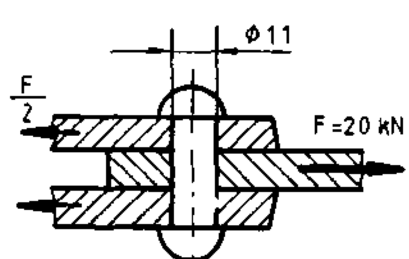

A = [ ] mm^2

τ = [ ] $\frac{N}{mm^2}$

c) A = ? τ = ?

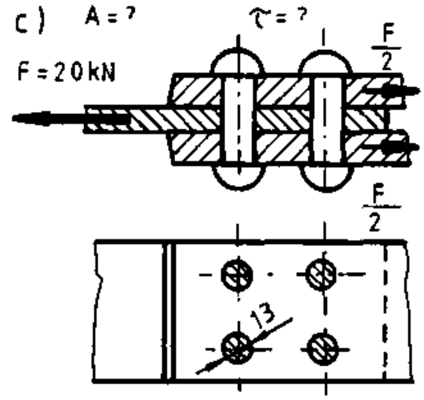

A = [ ] mm^2; τ = [ ] $\frac{N}{mm^2}$

a) $A = 353\,mm^2$, $\tau = 85\,N/mm^2$ b) $A = 190\,mm^2$, $\tau = 105\,N/mm^2$ c) $A = 1061\,mm^2$, $\tau = 18{,}8\,N/mm^2$

①

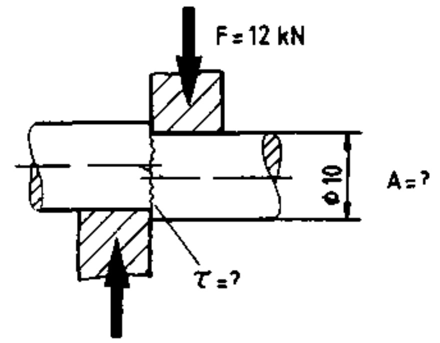

$A = \underline{\qquad}\ mm^2$; $\tau = \underline{\qquad}\ \frac{N}{mm^2}$

②

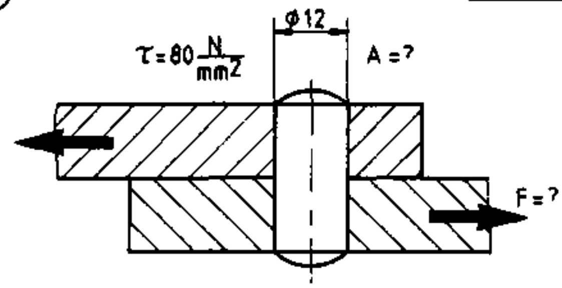

$A = \underline{\qquad}\ mm^2$; $F = \underline{\qquad}\ kN$

③

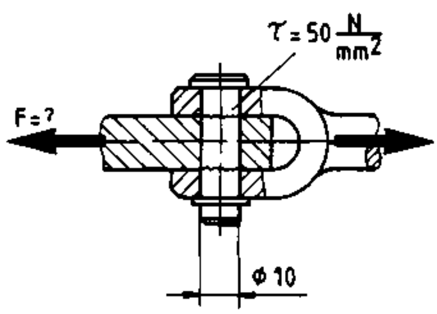

$F = \underline{\qquad}\ kN$

④

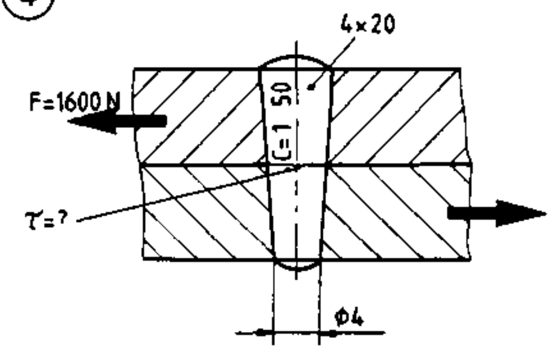

$\tau = \underline{\qquad}\ \frac{N}{mm^2}$

⑤

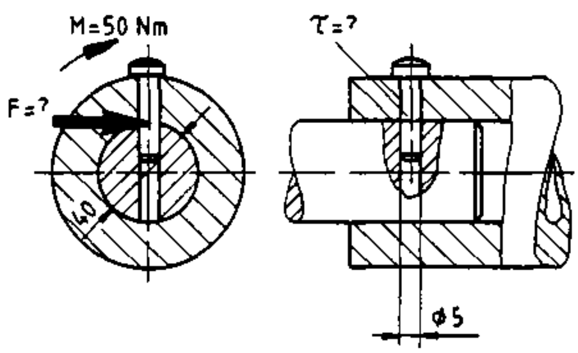

$F = \underline{\qquad}\ N$; $\tau = \underline{\qquad}\ \frac{N}{mm^2}$

⑥

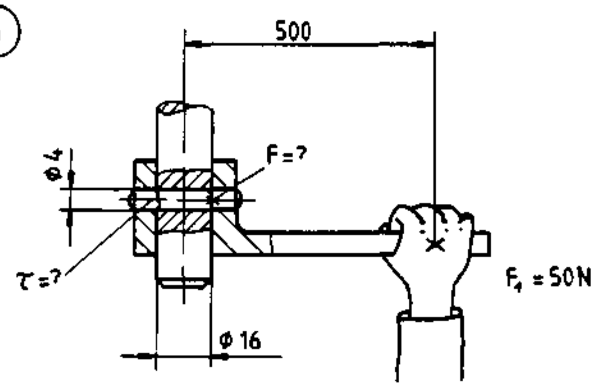

$F = \underline{\qquad}\ N$; $\tau = \underline{\qquad}\ \frac{N}{mm^2}$

⑦

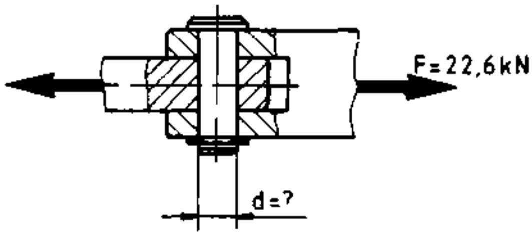

$A = ?$ $\tau = 100\ \frac{N}{mm^2}$

$A = \underline{\qquad}\ mm^2$; $d = \underline{\qquad}\ mm$

⑧

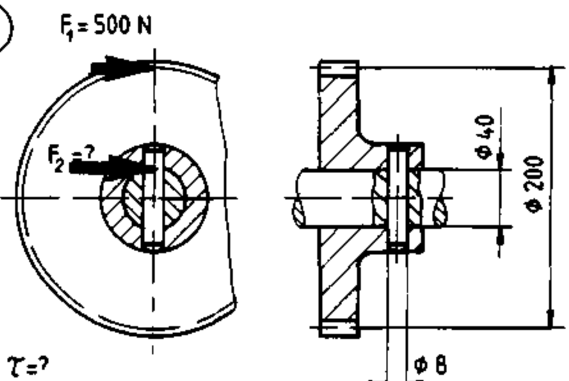

$\tau = ?$

$F_2 = \underline{\qquad}\ N$; $\tau = \underline{\qquad}\ \frac{N}{mm^2}$

(1)

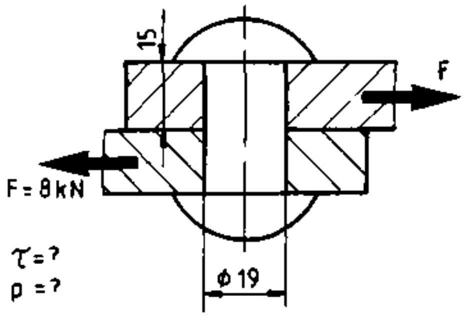

$\tau = ?$
$p = ?$

$\tau =$ ☐ $\frac{N}{mm^2}$; $p =$ ☐ $\frac{N}{mm^2}$

(2)

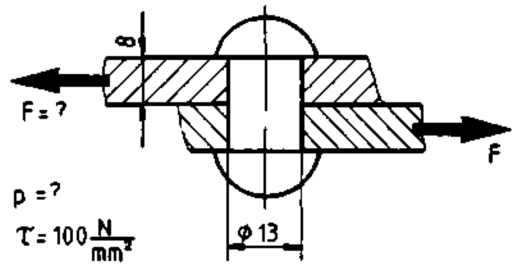

$p = ?$
$\tau = 100 \frac{N}{mm^2}$

$F =$ ☐ N; $p =$ ☐ $\frac{N}{mm^2}$

(3)

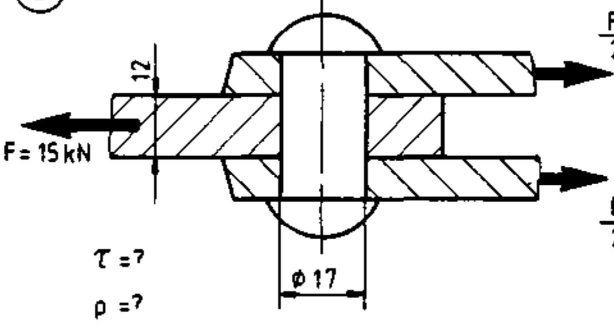

$\tau = ?$
$p = ?$

$\tau =$ ☐ $\frac{N}{mm^2}$; $p =$ ☐ $\frac{N}{mm^2}$

(4)

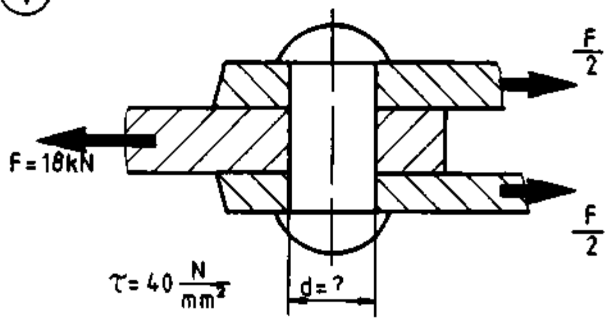

$\tau = 40 \frac{N}{mm^2}$

$d =$ ☐ mm

(5)

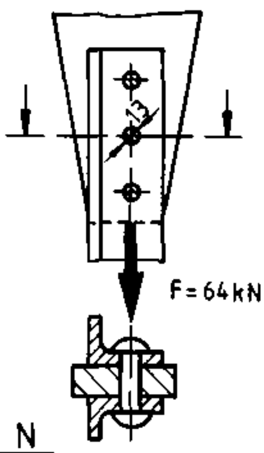

$\tau = ?$

$\tau =$ ☐ $\frac{N}{mm^2}$

(6)

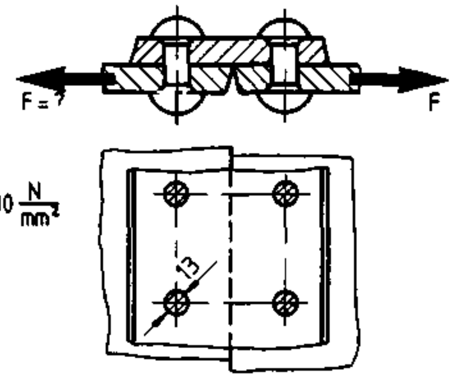

$\tau = 80 \frac{N}{mm^2}$

$F =$ ☐ kN

(7)

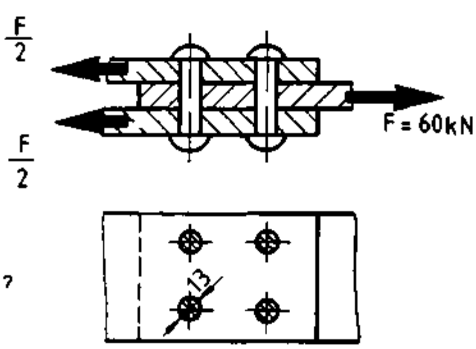

$\tau = ?$

$\tau =$ ☐ $\frac{N}{mm^2}$

(8)

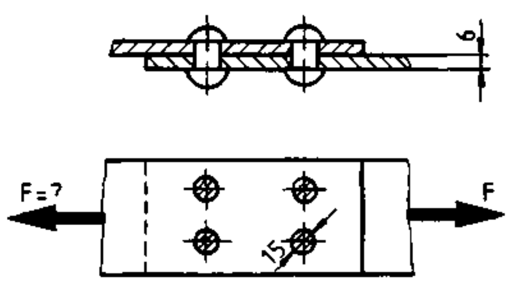

$\tau = 100 \frac{N}{mm^2}$ $p = ?$

$F =$ ☐ kN; $p =$ ☐ $\frac{N}{mm^2}$

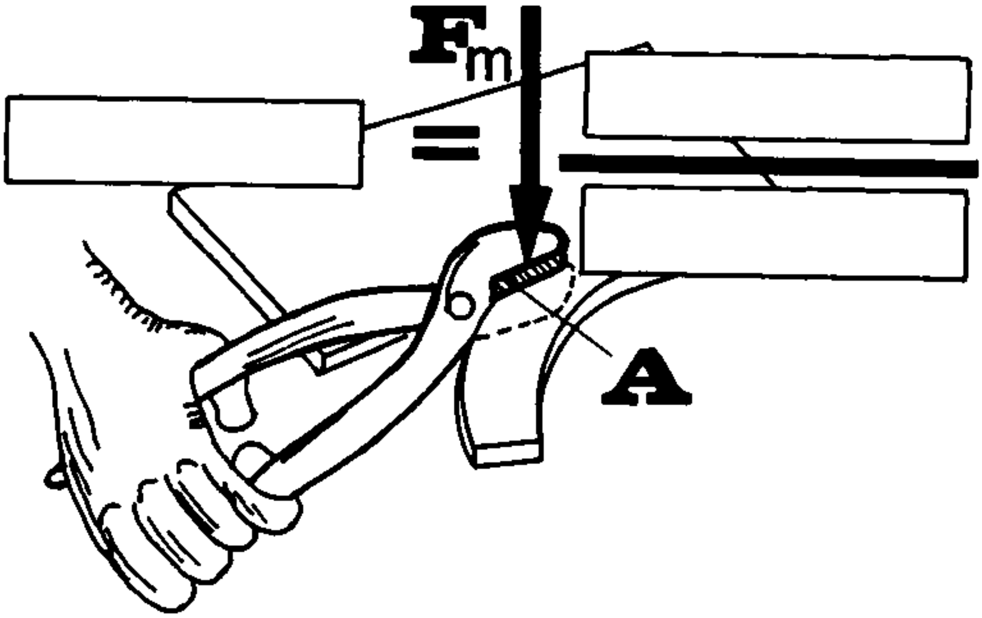

$$\tau_m = \text{———}$$

1.

$\tau_m = 100\ \frac{N}{mm^2}$

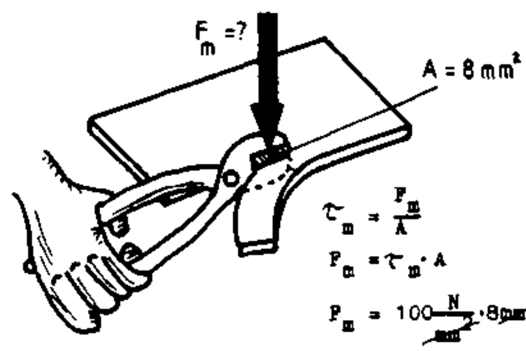

$\tau_m = \frac{F_m}{A}$

$F_m = \tau_m \cdot A$

$F_m = 100 \frac{N}{mm^2} \cdot 8 mm^2$

$\underline{\underline{F_m = 800 N}}$

2.

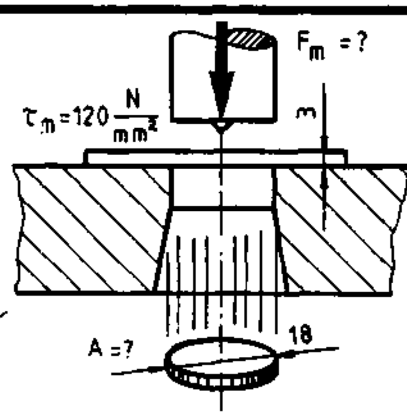

$\tau_m = \frac{F_m}{A}$

$F_m = \tau_m \cdot A$

$A = 18 mm \cdot 3{,}14 \cdot 3 mm$

$A = 170 mm^2$

$F_m = 120 \frac{N}{mm^2} \cdot 170 mm^2$

$\underline{\underline{F_m = 20347 N = 20{,}347 kN}}$

Test:

a)

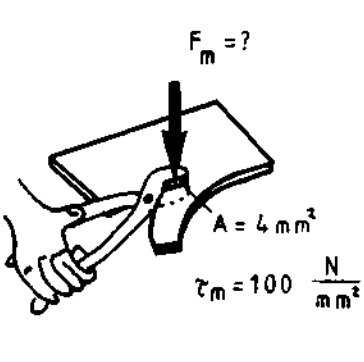

b)

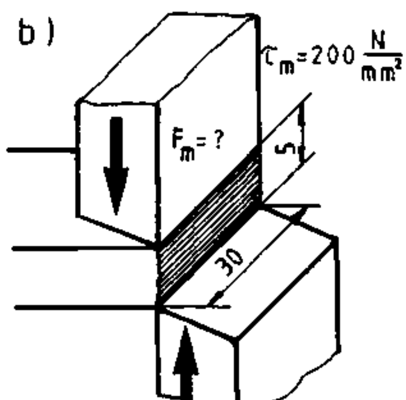

c)

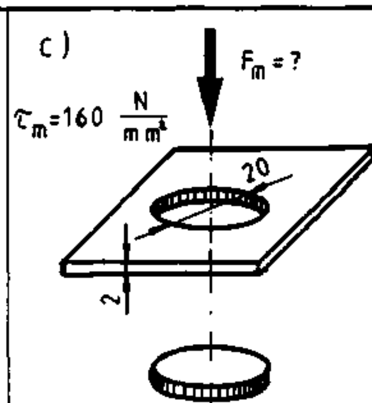

F_m = ☐ N	F_m = ☐ kN	F_m = ☐ kN

a) F_m = 400N b) F_m = 30kN c) F_m = 20,1kN

1

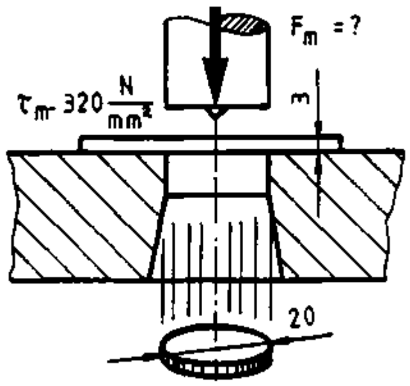

F_m = [ ] kN

2

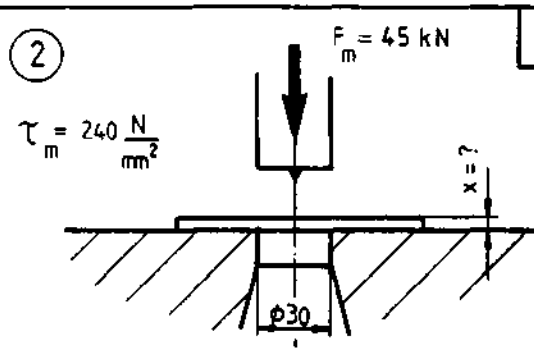

x = [ ] mm

3

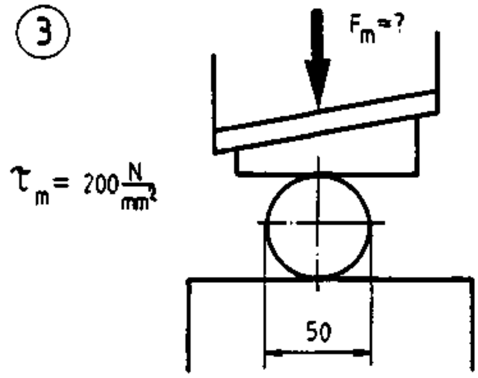

F_m = [ ] kN

4

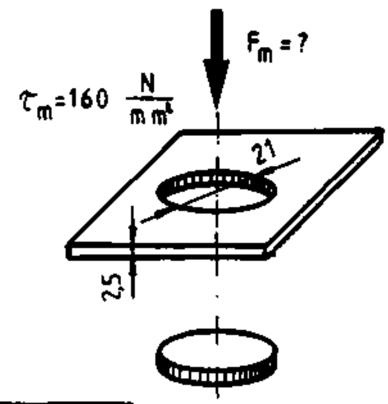

F_m = [ ] kN

5

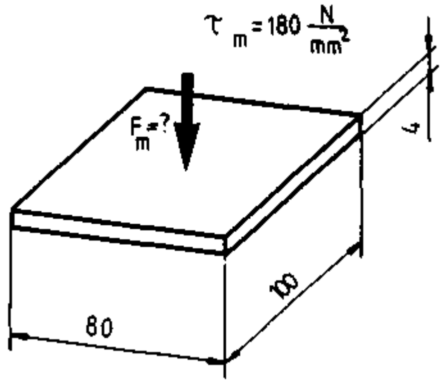

F_m = [ ] kN

6

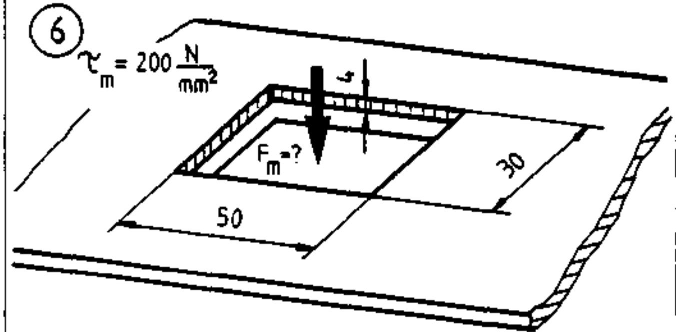

F_m = [ ] kN

7

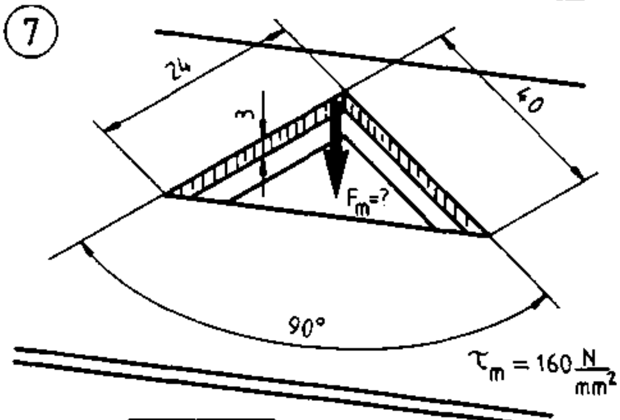

F_m = [ ] kN

8

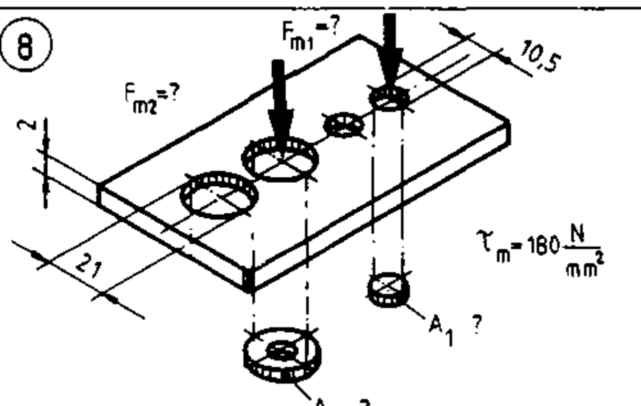

A_1 = [ ] mm^2 A_2 = [ ] mm^2

F_{m1} = [ ] kN F_{m2} = [ ] kN

RURAL BUILDING

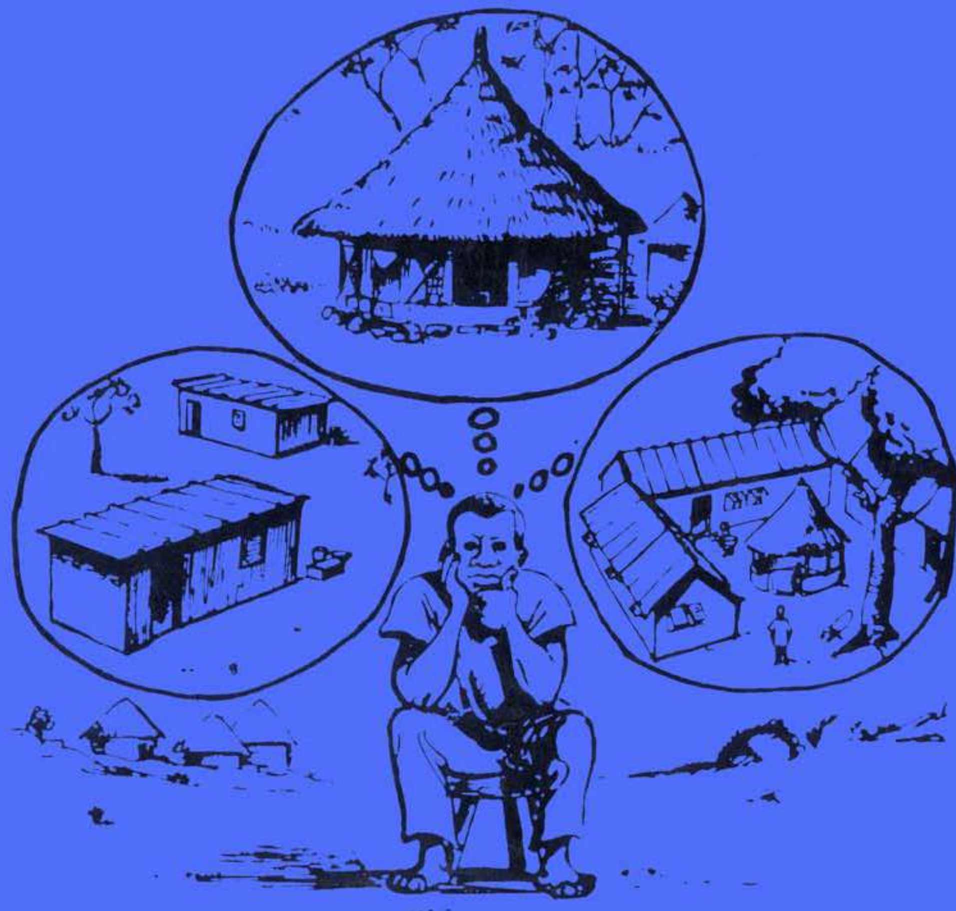

DRAWING BOOK

PREFACE

This official text book is designed purposely to meet the needs of trainees who are pursuing rural building courses in various training centres administered by the National Vocational Training Institute.

The main aim of this book is to provide much needed trade information in simple language and with illustrations suited to the understanding of the average trainee.

It is the outcome of many years of experiment conducted by the Catholic F.I.C. brothers of the Netherlands, and the German Volunteer Service instructors, in simple building techniques required for a rural community.

The National Vocational Training Institute is very grateful to Brothers John v. Winden and Marcel de Keijzer of F.I.C. and Messrs. Fritz Hohnerlein and Wolfram Pforte for their devoted service in preparing the necessary materials for the book; we are also grateful to the German Volunteer Service and the German Foundation For International Development (DSE) - AUT, who sponsored the publication of this book.

We are confident that the book will be of immense value to the instructors and trainees in our training centres.

DIRECTOR: National Vocational Training Institute, Accra

INTRODUCTION TO A RURAL BUILDING COURSE

Vocational training in Rural Building started in the Nandom Practical Vocational Centre in 1970. Since then this training has developed into an official four year course with a programme emphasis on realistic vocational training.

At the end of 1972 the Rural Building Course was officially recognised by the National Vocational Training Institute. This institute guides and controls all the vocational training in Ghana, supervises the development of crafts, and sets the examinations that are taken at the end of the training periods.

The Rural Building programme combines carpentry and masonry, especially the techniques required for constructing housing and building sanitary and washing facilities, and storage facilities. The course is adapted to suit conditions in the rural areas and will be useful to those interested in rural development, and to farmers and agricultural workers.

While following this course, the instructor should try to foster in the trainee a sense of pride in his traditional way of building and design which is influenced by customs, climate and belief. The trainee should be aware of the requirements of modern society, and the links between old and new techniques, between modern and traditional designs -- and how best to strike a happy medium between the two with regard to considerations like health protection, storage space, sewage, and the water supply. The trainee should be encouraged to judge situations in the light of his own knowledge gained from the course, and to find his own solutions to problems; that is why this course does not provide fixed solutions but rather gives basic technical information. The instructor can adapt the course to the particular situation with which he and the trainee are faced.

This course is the result of many years of work and experimentation with different techniques. The text has been frequently revised to serve all those interested in Rural Development, and it is hoped that this course will be used in many vocational centres and communities. It is also the sincere wish of the founders of this course that the trainees should feel at the completion of their training that they are able to contribute personally to the development of the rural areas, which is of such vital importance to any other general development.

We are grateful to the Brothers F.I.C., the National Vocational Training Institute, and the German Volunteer Service for their support and assistance during the preparation of this course.

Bro. John v. Winden (F.I.C.)

LAY-OUT OF THE RURAL BUILDING COURSE

The Rural Building Course is a block-release -system course, which means that the trainee will be trained in turn at the vocational centre and at the building site. The period of training at the centre is called "off-the-job training", and the period on the building site is called "on-the-job training". Each will last for two years, so that the whole course will take four years and will end with the final test for the National Craftsmanship Certificate.

BLOCK RELEASE SYSTEM

YEAR	TERM 1	TERM 2	TERM 3
1	X	X	X
2	O	O	O
3	O	X	O
4	X	O	X

X = OFF-THE-JOB TRAINING
O = ON-THE-JOB TRAINING

The total "off-the-job" training period lasts approximately 76 weeks, each week 35 hours. During this training about 80% of the time is spent on practical training in the workshop. The remaining 20% of the time is devoted to theoretical instruction.

The total "on-the-job" training period lasts approximately 95 weeks, each week 40 hours. During this period the trainee does full-time practical work related to his course work. In addition some "homework" is assigned by the centre and checked by the instructors.

A set of books has been prepared as an aid to the theoretical training:

- Rural Building, Basic Knowledge (Form 1)
- Rural Building, Construction (Forms 2, 3, 4)
- Rural Building, Drawing Book (Forms 1, 2, 3, 4)
- Rural Building, Reference Book

All these books are related to each other and should be used together. The whole set covers the syllabus for Rural Building and will be used in the preparation for the Grade II, Grade I, and the National Craftsmanship Certificate in Rural Building.

SYLLABUS FOR RURAL BUILDING DRAWING

FORM I

FORM II

FORM III

FORM IV

BOOK INTRODUCTION

The drawing book is divided into four sections, corresponding to the four forms in the Rural Building curriculum.

The lessons are planned to last approximately 90 minutes, during which the instructor should spend some time going over mistakes made in the drawings from previous lessons. Then the instructor can give the introduction to the new lesson, following this by a discussion of the how and why of the lesson. At the end of the session, the instructor should furnish the trainees with the technical data for the new drawing they are assigned for that week. Assignments should be handed in a few days before the next lesson so the instructor has time to correct them and make himself acquainted with the general difficulties which appear as a result.

Tests should be given at intervals. The drawings should then be made within the time specified in the book. The instructor can write the necessary technical data on the blackboard.

In the first part of the book much emphasis is put on the techniques for oblique and orthographic drawings. This kind of drawing has to be mastered early for the trainee to be able to understand drawings made on the blackboard during lessons. Sketching is important because during practicals many explanations are made with the aid of sketches. Plenty of time should be allowed for these exercises, and it is only at the end of the first year that the trainee should attempt drawings of simple frames. The instructor can add other drawings or sketches as needed to help the trainees to understand.

The last three parts of the book are oriented towards the course content for Rural Building. In these parts the trainee will find the lay-out of a whole building from the foundations to the roof construction, with the plans, elevations and cross sections; and building design is discussed as well. Here too, the instructor should feel free to change the sequence of the lessons if necessary to fit them together with the practicals in the workshop. During the lessons the instructor is advised to visit building sites with the trainees so that they can compare the drawings with the actual structures.

Ability to read drawings is also very important and ample time should be spent to help the trainees master this. It is helpful at times to have the trainees exchange drawings and correct each other's work.

DRAWING EQUIPMENT

DRAWING BOARD

A drawing board should be made from well seasoned wood or good quality plywood. One edge of the board -- usually the left edge -- should be very straight so it can be used with the T-square.

T-SQUARE

T-squares are rulers with a cross piece or stock fixed on one end to form the letter "T". The stock is either glued or attached to the blade by screws. Like drawing boards, T-squares should be made from materials which do not warp easily.

SET SQUARES

Set squares are triangular shaped tools which are used with the T-square. Two angles are available; 45 degrees and 60 degrees.

RULERS

Rulers used for drawing have 30 centimetre (cm) scales, subdivided into 300 millimetres (mm).

PENCILS

Pencils used for drawing are usually 2H, 3H, or 4H. The higher the number, the harder the lead. Sharpen pencils with a pocket knife. Cut the wood at a low angle to expose about 7 mm of lead, then sharpen the lead by carefully rubbing it on a piece of sandpaper.

Pencil lines must be fine, light and clear. It is a good habit to rotate the pencil as you draw a line, to keep a sharp point on the lead. When drawing lines follow the instructions on page 3.

DRAWING PINS

Drawing pins are used to fix paper to the board. The pins should have short fine points so that they don't make large holes in the drawing board. The pins should have large flat heads so that they can be removed easily. Because drawing pins can damage the T-square, various types of adhesive (sticky) tapes are often used instead of pins.

THE COMPASS

The compass is a precision instrument used to draw circles. One of the legs has a pointed end; this point must be thin and sharp so that it makes only a small hole in the paper. Especially when drawing small circles, make sure that the pencil point is the same length as the steel pin.

ERASERS

An eraser should be soft and of good quality so it does not damage the paper. The eraser should be used very little, and only with great care. If the corners of the eraser are rounded, it is a good idea to cut one end sharp again if you need to erase very exactly.

DRAWING PAPER

Drawing paper is special paper and it is cut to standard sizes.

ALWAYS "DRAG" THE PENCIL ---------- NEVER "PUSH" IT

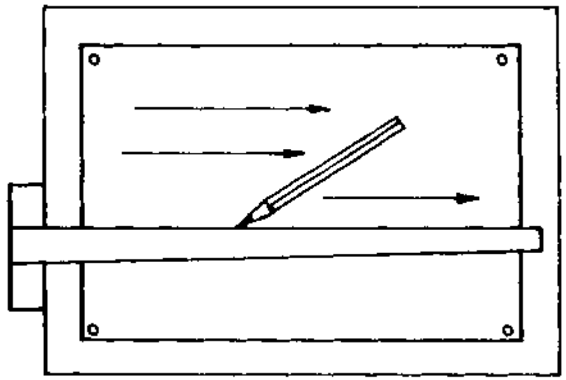

HORIZONTAL LINES

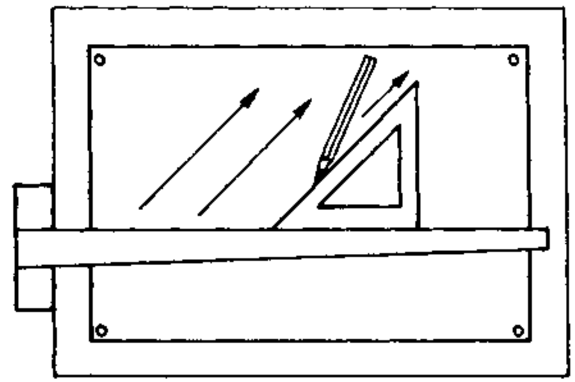

SLANTING LINES

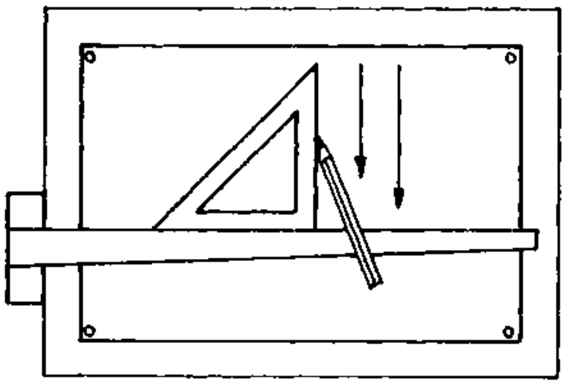

VERTICAL LINES

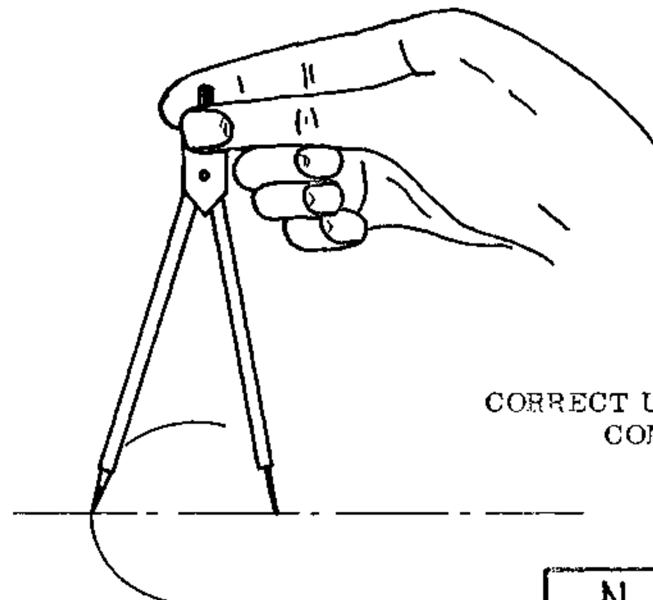

CORRECT USE OF THE COMPASS

N.P.V.C.

3.

LETTERING

Any writing which is done on a drawing is always in the form of lettering and never in ordinary writing. Make sure that all the lettering on a drawing is the same height, with the exception of the title, which may be in larger capitals.

GUIDELINES

Guidelines are made to show the height and proper alignment of the letters on a drawing. They should be ruled very faintly with a sharp pencil so that they can be erased easily. For pencil lettering use an H or HB pencil.

TYPES OF LINES

Various types of lines are used on drawings; these are shown in the examples on the right.

A- FAINT LINES: These should stand out very fine and clear.

B- VISIBLE OUTLINES: These are bold continous lines and they should stand out clearly.

C- HIDDEN OUTLINES: These are chains of short, sharp lines.

D- SECTION LINES: These show the plane on which an object is cut for the section view.

E- DIMENSION LINES: These lines always have a number on them, giving the length of a part of the object.

F- CENTRE LINES: These show the centre line of an object and are usually used in sketching.

G- RADIUS AND DIAMETER LINES: In drawing circles, two lines are particularly important; these are the radius and diameter of the circle.

WHICH KIND OF LINES DO YOU SEE IN DRAWINGS 1, 2, AND 3?

ABCDEFGHIJKLMNOPQRSTUVWXYZ

123456789

ABCDEFGHIJKLMNOPQRSTUVWXYZ

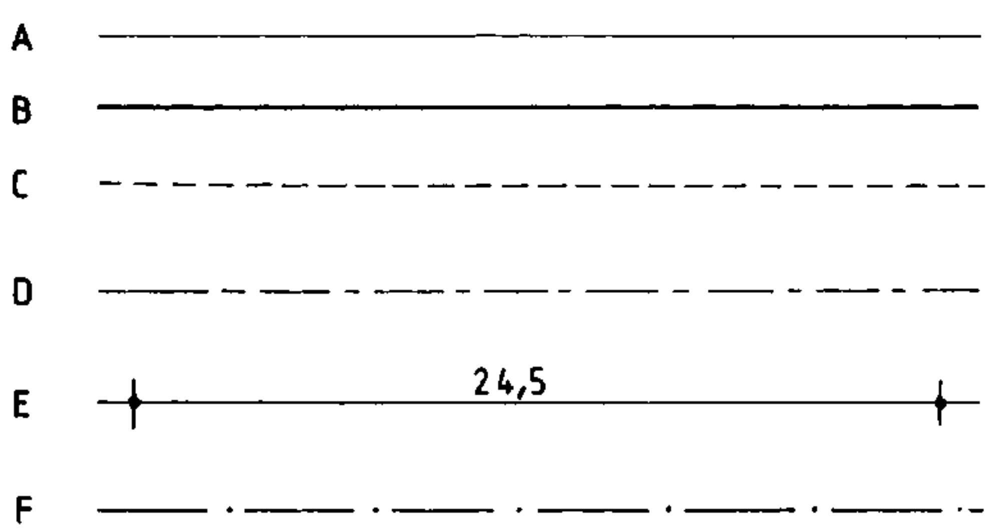

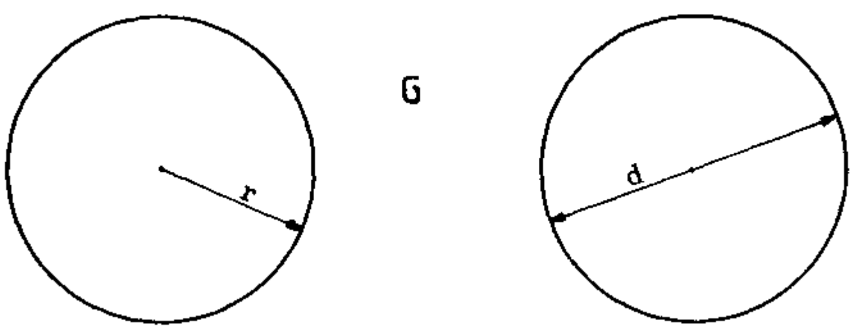

r = RADIUS

d= DIAMETER

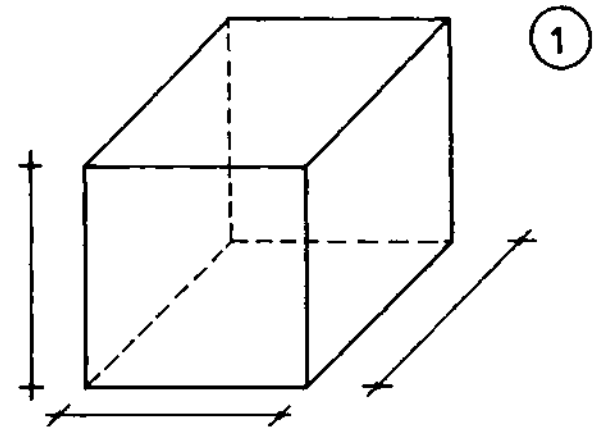

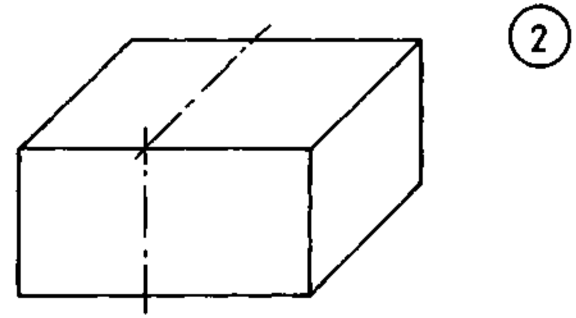

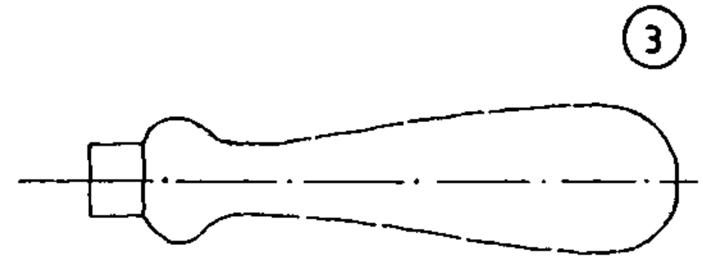

N . P . V . C .

5.

ORTHOGRAPHIC DRAWING

An orthographic drawing shows an object by means of a number of different views. Each view shows one side of the object as it is seen if looked at straight on. The diagram here shows a rectangular solid (A) along with an orthographic drawing of it (B).

- If a certain view will be the same as another view, you need draw only one of the views (compare the left side view and right side view from A).
- If certain measurements on one view are the same as measurements on another view, you should not label these measurements on both views. It is better to arrange the views so it is clear that the measurements are the same. The drawings on the right show how this is done (B & D).

In making an orthographic drawing, it is necessary to first choose the "front view". Any side can be choosen as the front view (even the top!) although it is usual to choose the most important side of the object.

- THE IMPORTANT POINTS TO REMEMBER IN MAKING AN ORTHOGRAPHIC DRAWING ARE:
  - Space the views an even distance apart.
  - Make accurate measurements.
  - Make clear lines. Make sure that the outlines are darker than the dimension lines.
  - The scale, in cm or mm, should be mentioned in the title block of the drawing (see page 9).
  - The lettering must be uniform and clear.
- STUDY: Look at solid A and orthographic drawing B. You need only three views for the drawing. Why is this?
  Look at solid C and orthographic drawing D. Why do you need more views in orthographic drawing D?
- DRAW: Make an orthographic drawing of solid C with side X as the front view.

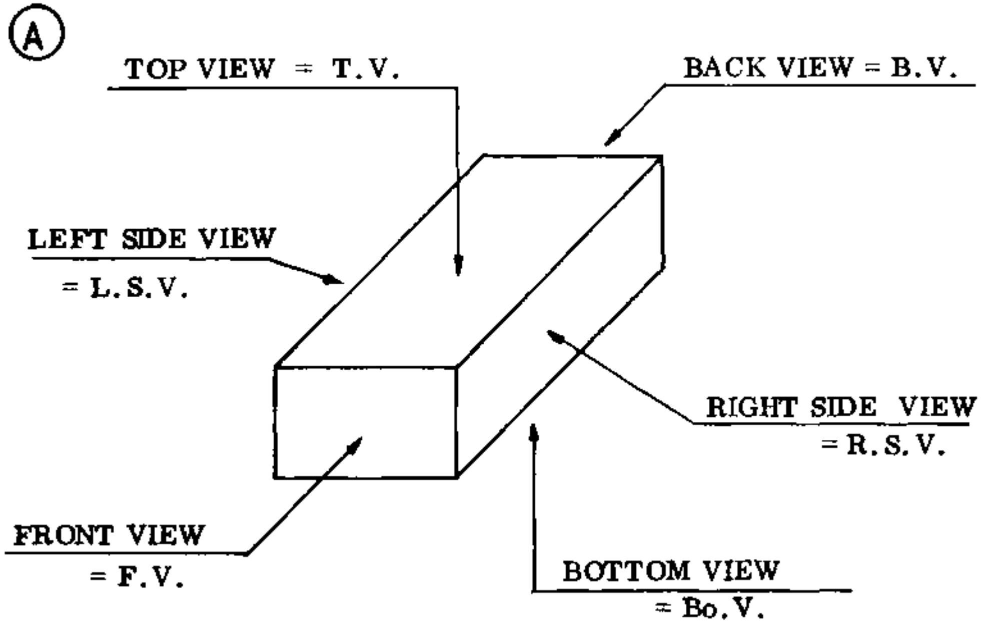
A
TOP VIEW = T.V.
BACK VIEW = B.V.
LEFT SIDE VIEW
= L.S.V.
RIGHT SIDE VIEW
= R.S.V.
FRONT VIEW
= F.V.
BOTTOM VIEW
= Bo.V.

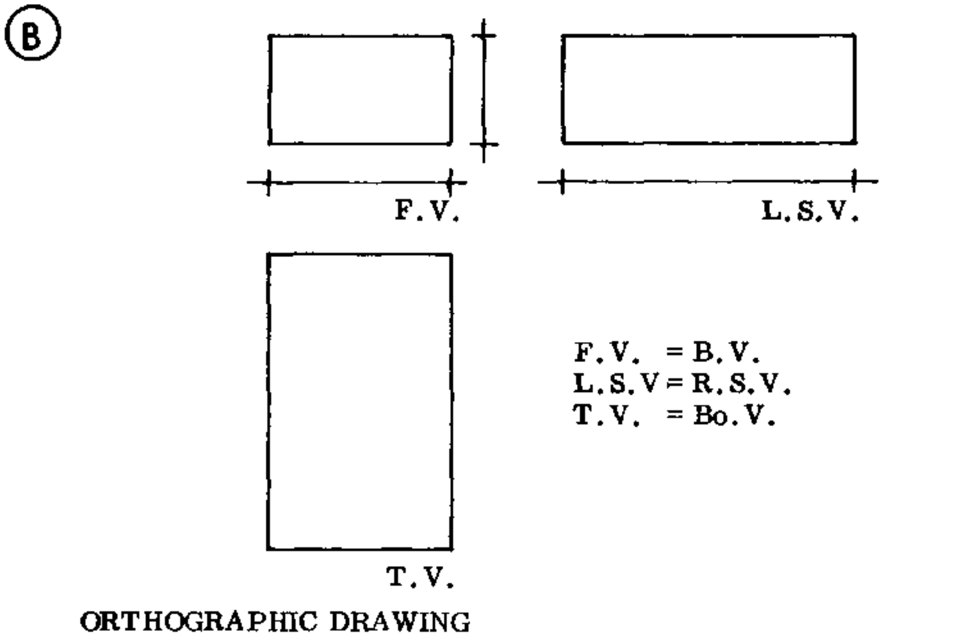
B
F.V.
L.S.V.
T.V.
F.V. = B.V.
L.S.V = R.S.V.
T.V. = Bo.V.
ORTHOGRAPHIC DRAWING

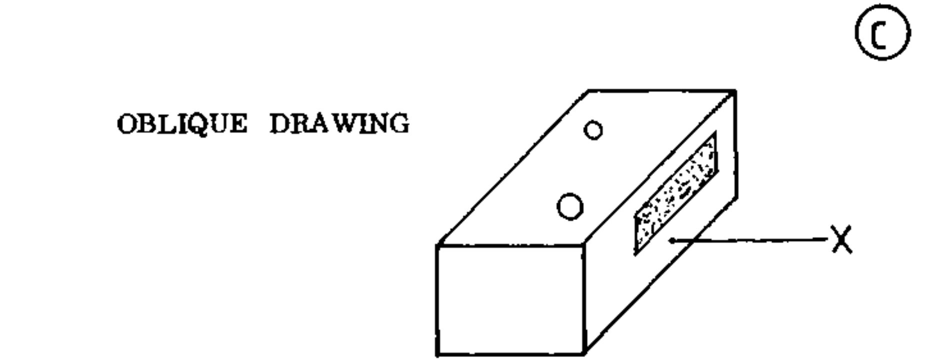
C
OBLIQUE DRAWING
X

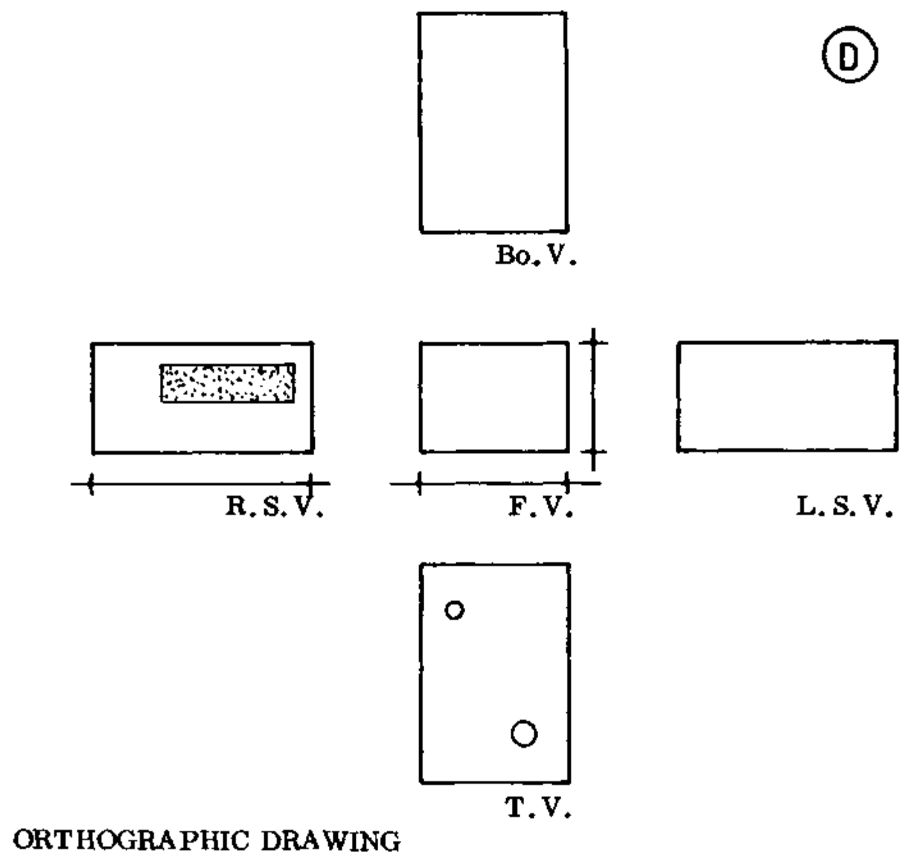
D
Bo.V.
R.S.V.
F.V.
L.S.V.
T.V.
ORTHOGRAPHIC DRAWING

N.P.V.C.	
30 MIN.	7.

SETTING OUT THE DRAWING

When you set out the different views of an object on the paper, make sure that they are evenly spaced. Never squash them all on one side. Leave enough space for the necessary titles, sub-titles, and descriptions.

The name of each view should be written on the lower right side of the view. Abbreviations of the view names can be used:

F.V.	= front view	B.V.	= back view
T.V.	= top view	Bo.V.	= bottom view
L.S.V.	= left side view	R.S.V.	= right side view

MARGIN LINE

A margin line should be drawn around the paper, 1 cm from the edge.

DIMENSIONS

No drawing is complete unless the dimensions or lengths of all the sides are given. The illustration on the right shows how dimensions are given on a drawing. Make sure that no dimensions are left out or repeated.

TITLE BLOCK

When the drawing is complete, the last thing that has to be done is to make a title block in the bottom right corner of the paper. The title block gives the title of the drawing, the scale used, the date on which it was drawn, and who drew it. The standard size of the title block is given in the drawing on the right.

- DRAWING: Make an orthographic drawing of solid A.

CORRECT SPACING OF THE VIEWS

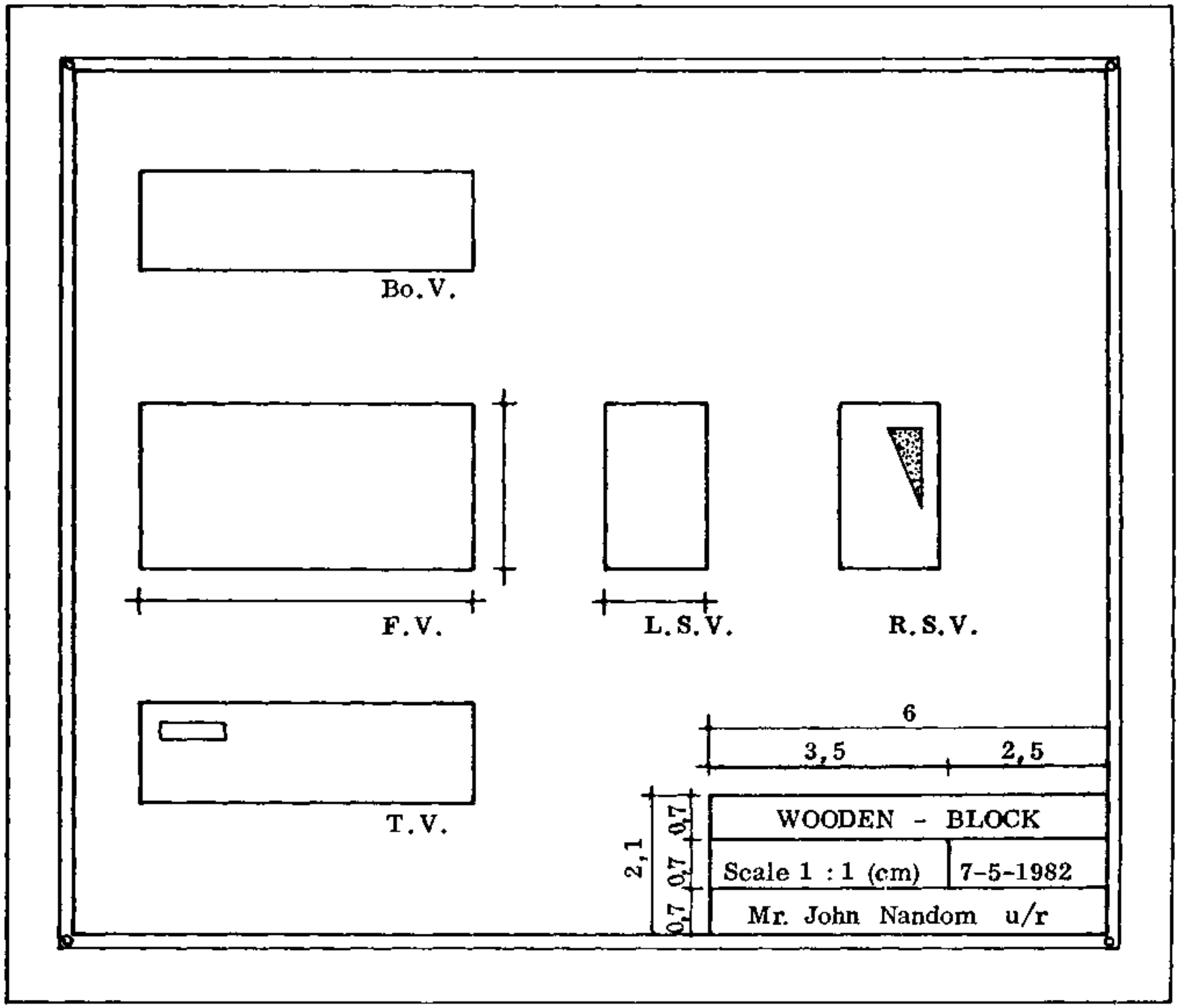

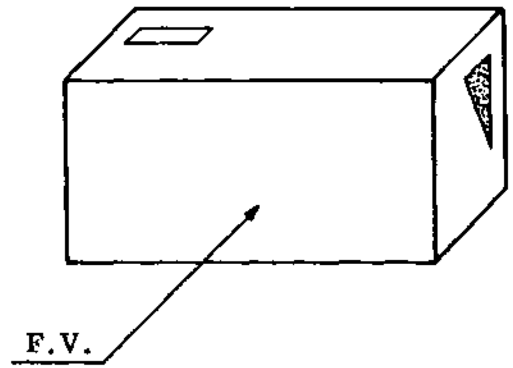

OBLIQUE EXAMPLE

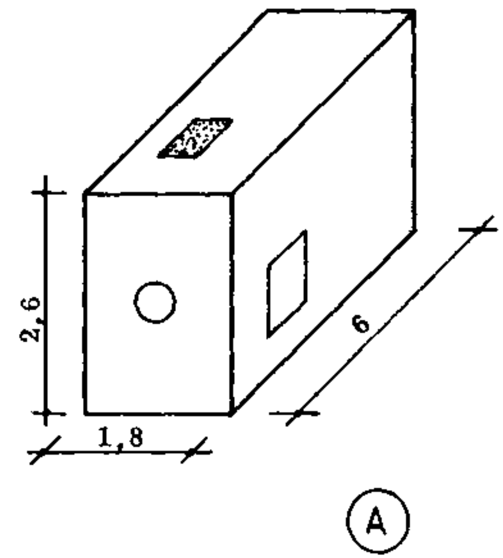

○ = FRONT VIEW

MAKE AN ORTHOGRAPHIC DRAWING OF THIS SOLID.

N . P . V . C .	
40 MIN.	9.

OBLIQUE DRAWING

An oblique drawing is a pictorial representation of an object. The difference between oblique and orthographic drawings is that in oblique drawings the object appears as a single drawing and looks like it does in real life. It is important that you be able to understand both types of drawing and be able to turn one type of drawing into the other.

In oblique drawing one face of the object is drawn in its true shape. This face is always the front view. The rest of the drawing is then built up using three "axes" or directions. One axis is always horizontal (A); another axis is always vertical (B); but the third axis (C) can be at any other angle. It is usual, however, to have the third axis at 45 degrees. These are shown in the illustration on the right.

Oblique drawing can be done step by step.

1 - Choose the front view. Draw it faintly on your paper.
2 - Draw the oblique lines at 45 degrees. Make sure that they are all the same length.
3 - Connect the oblique lines together using vertical lines or horizontal lines as needed.
4 - Erase all unnecessary lines.
5 - Mark all dimensions.
6 - Redraw the outline of the object with an HB pencil to make it darker.

CURVED OBJECTS

An object with a curved surface can easily be shown in an oblique drawing. To do this, draw the shape of the curve in the front view, so that the curve appears in its true shape. Finish off by drawing the oblique lines etc. as usual (see below).

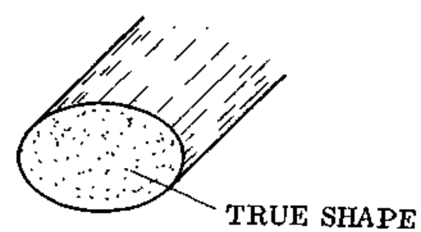

① FRONT VIEW

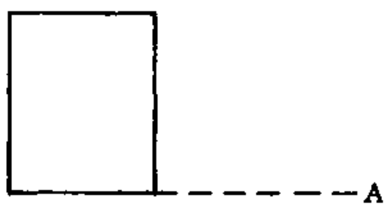

② OBLIQUE LINES

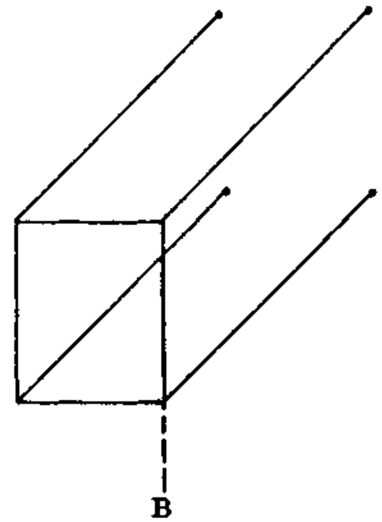

③ CONNECT LINES

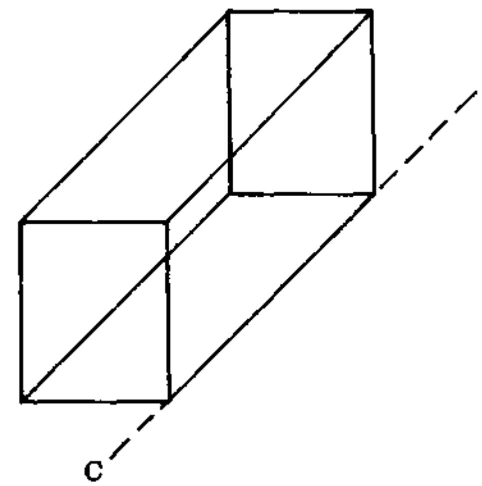

④ ERASE UNNECESSARY LINES

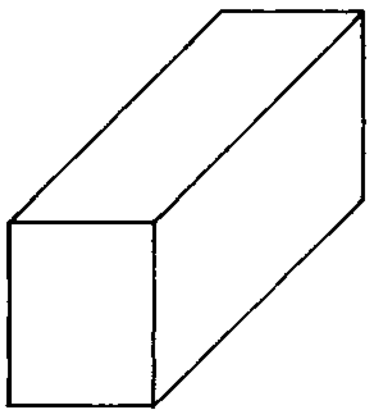

⑤ MARK DIMENSIONS

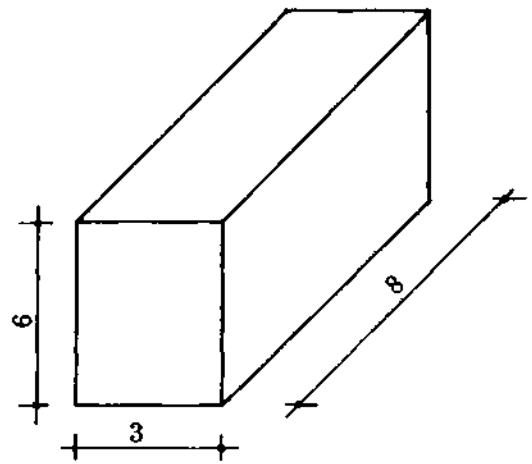

⑥ REDRAW OUTLINES

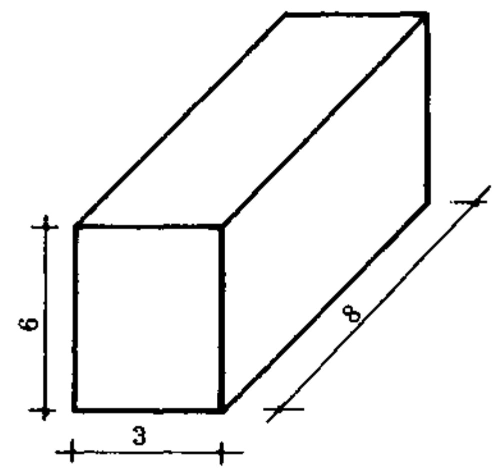

N.P.V.C.	
	11.

TECHNIQUES IN OBLIQUE DRAWING

There are some techniques and conventions that you need to know to make good oblique drawings. The most important of these is choosing the best view of the object. The best view is the one that gives you the most information about the object. A good rule to follow is: the best view is the one that is the hardest to draw.

On the next page you can see four different drawings of the same object. They all have the same front view but they are all projected in different directions. You should see that they all give different amounts of information about the object (A).

- Which view gives you the most information?
- Which view is the hardest to draw?

The answer is "B", for both questions.

- CONVENTIONS: All types of drawing have their own conventions. At first the conventions may seem unnecessary, but you will soon find that they all help you to understand a drawing better. One of the most important conventions in oblique drawing is the marking of dimensions. The drawing here (B) shows how this should be done. Remember that the dimensions are given simply as numbers on the drawing itself, and that the unit (cm, mm, etc.) is given in the title block.

  For example: if the length of a block is 6 cm, the dimension in the drawing is given as "6"; and the unit "cm" is recorded in the title block.

- DRAW: Draw or sketch several solids, as in the following pages. Judge which side should be the front view. Decide upon the position in which the solid will be drawn.

A

FOUR DIFFERENT POSITIONS IN OBLIQUE

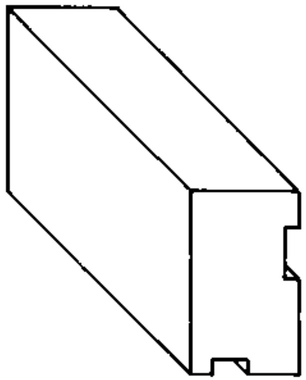

T.V./F.V./L.S.V.

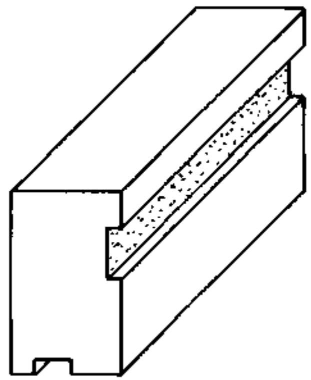

T.V./F.V./R.S.V.

F.V./L.S.V./Bo.V.

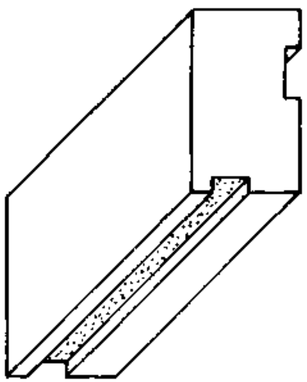

F.V./R.S.V./Bo.V.

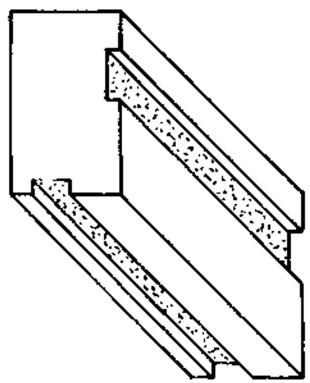

WHICH POSITION IS THE BEST ?

MARK DIMENSIONS LIKE THIS !

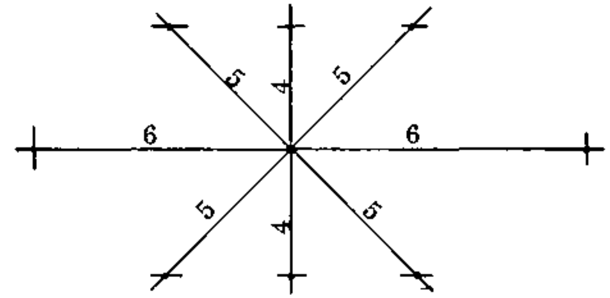

B

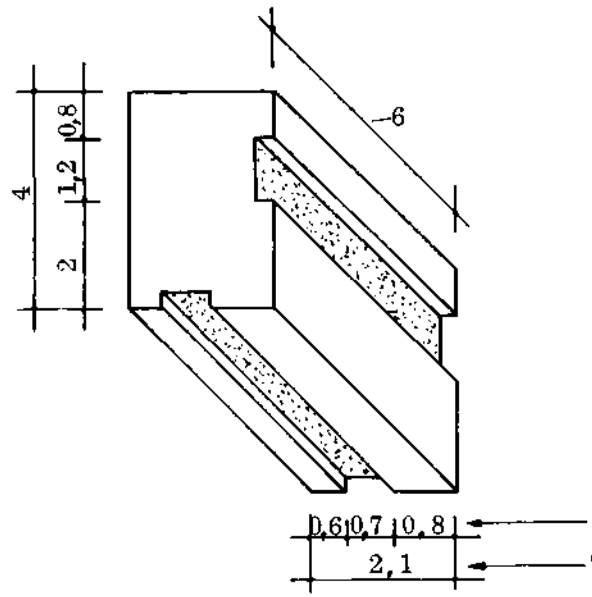

F.V./Bo.V./R.S.V.

N. P. V. C.	
	13.

OBLIQUE — TO — ORTHOGRAPHIC

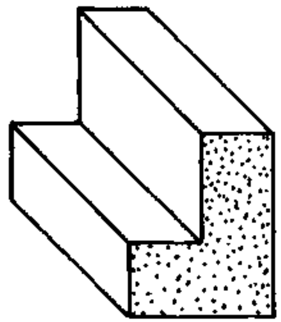

THIS IS WHAT YOU SEE!

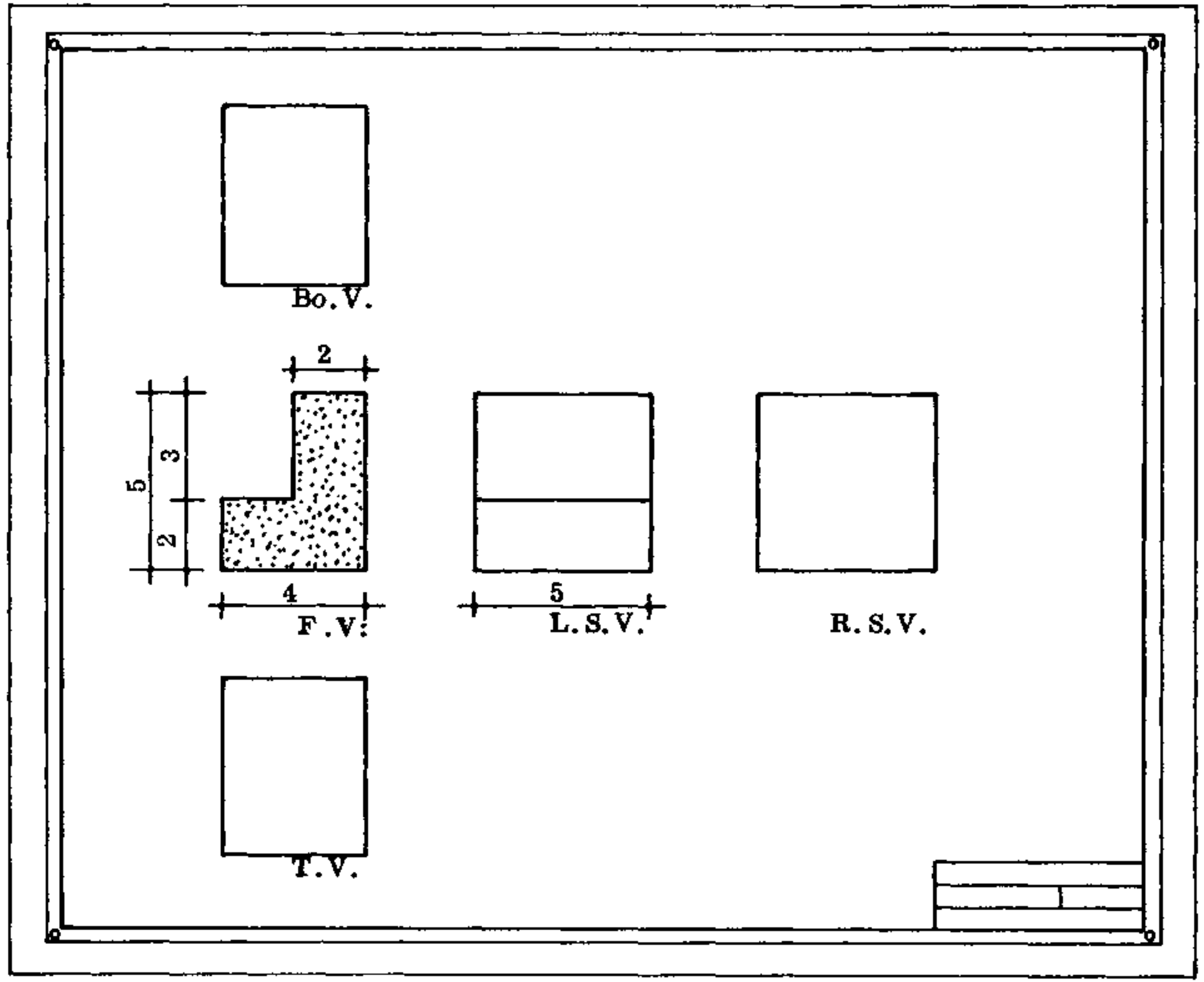

FINISH UP WITH THIS!

N. P. V. C.	
14.	40 MIN.

ORTHOGRAPHIC — TO — OBLIQUE

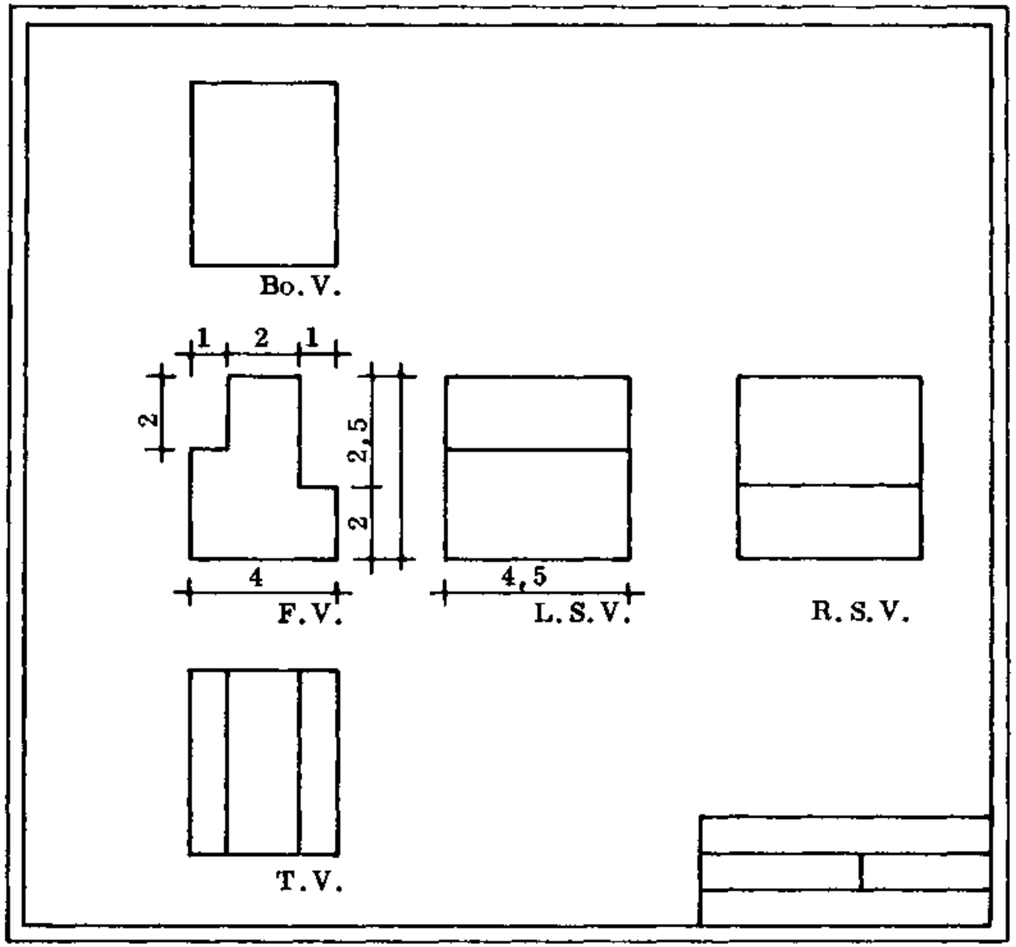

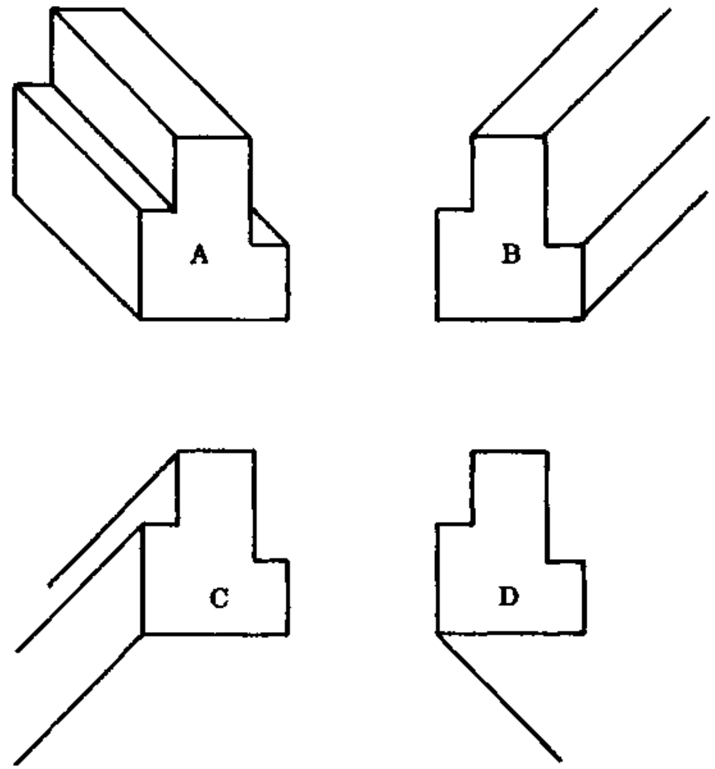

FINISH OFF DIAGRAMS B, C and D

THIS IS AN ORTHOGRAPHIC DRAWING — THIS IS WHAT YOU SEE!

N. P. V. C.	
60 MIN.	15.

EXERCISE: OBLIQUE TO ORTHOGRAPHIC

1

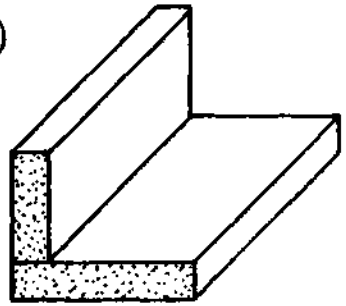

2

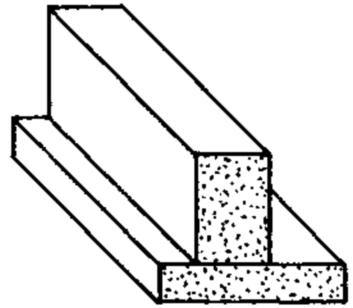

3

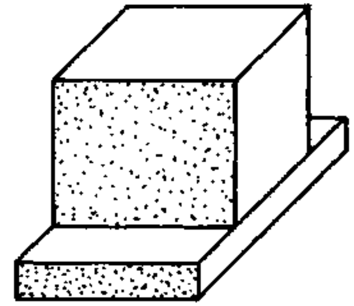

4

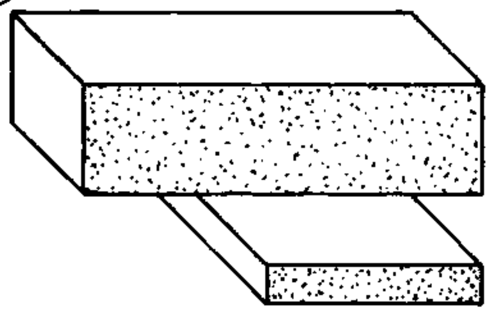

5

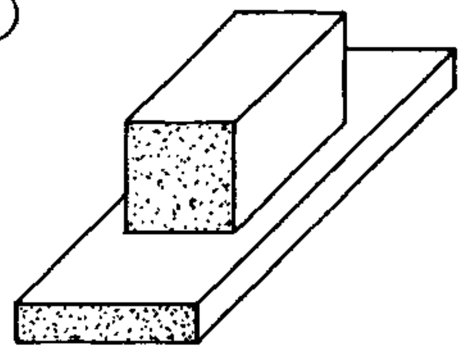

6

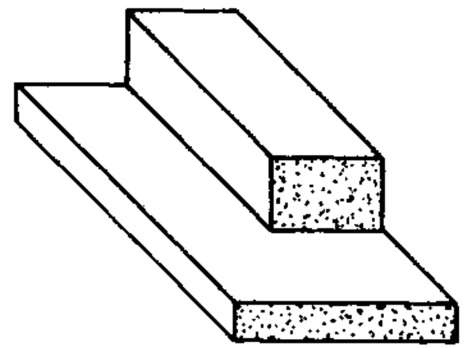

1 - MAKE ORTHOGRAPHIC DRAWINGS OF EACH BLOCK.

2 - DRAW EACH BLOCK USING AT LEAST TWO DIFFERENT FRONT VIEWS.

7

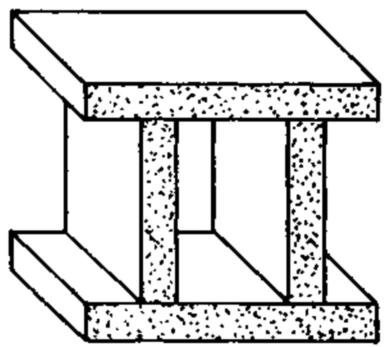

8

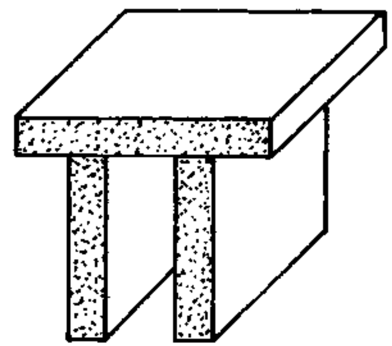

N . P . V . C.	
16.	50 MIN.

EXERCISE: ORTHOGRAPHIC TO OBLIQUE

1

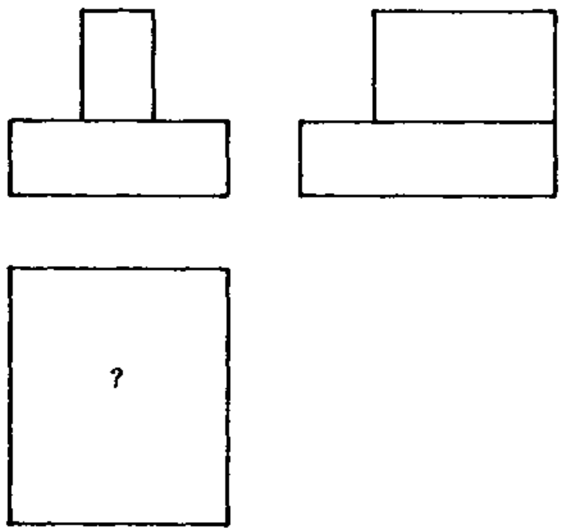

2

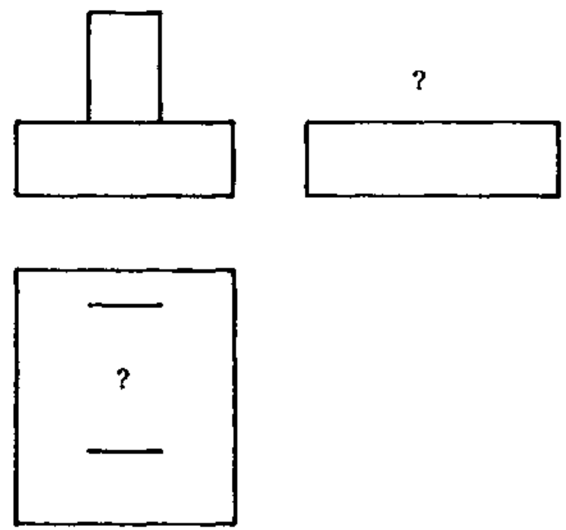

3

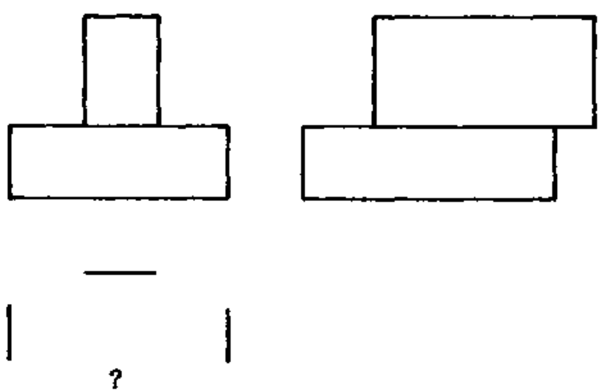

- COMPLETE ALL VIEWS.
- NAME ALL VIEWS.
- FILL IN ALL DIMENSIONS.
- MAKE OBLIQUE DRAWINGS FROM THESE ORTHOGRAPHIC DRAWINGS.
  SCALE 1 : 2 (cm)

N . P . V . C .	
30 MIN.	17.

EXERCISE: OBLIQUE TO ORTHOGRAPHIC

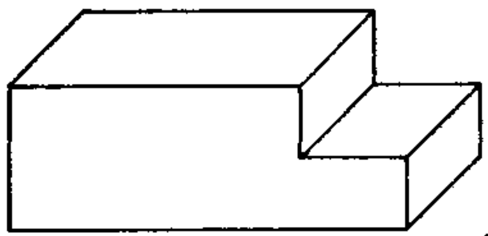

1

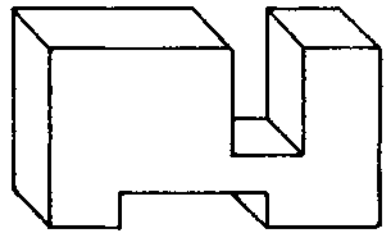

2

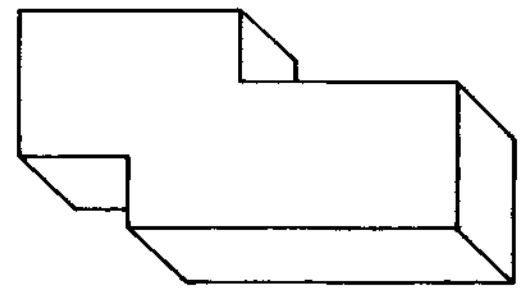

3

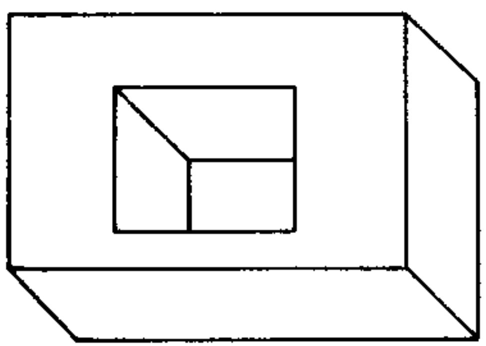

4

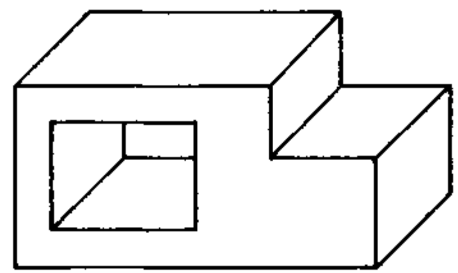

5

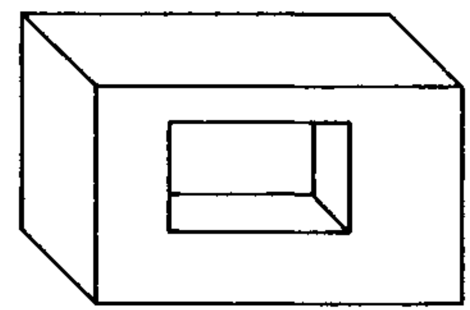

6

- MAKE AN ORTHOGRAPHIC DRAWING OF EACH BLOCK.
- MARK ALL DIMENSIONS OF THESE 8 BLOCKS.
- DRAWINGS SCALE 1 : 5 (cm)

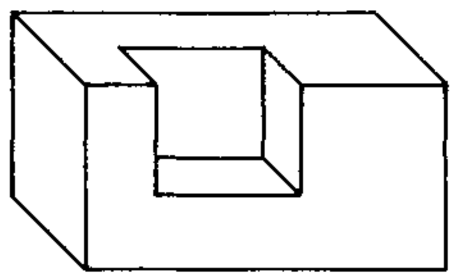

7

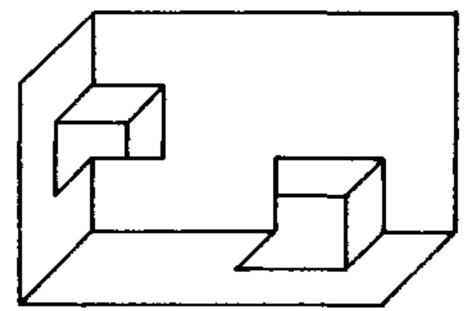

8

N . P . V . C.	
18.	40 MIN.

EXERCISE: ORTHOGRAPHIC TO OBLIQUE

1

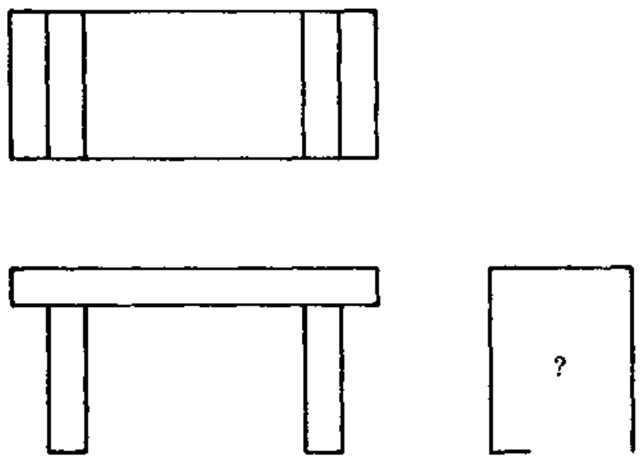

Do you need L.S.V and R.S.V ?

2

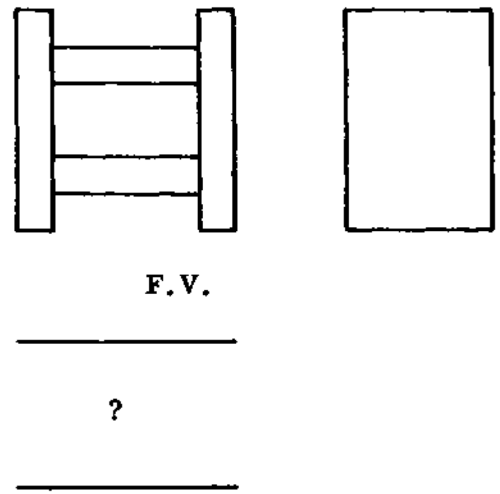

Do you need R.S.V. and L.S.V. ?

3

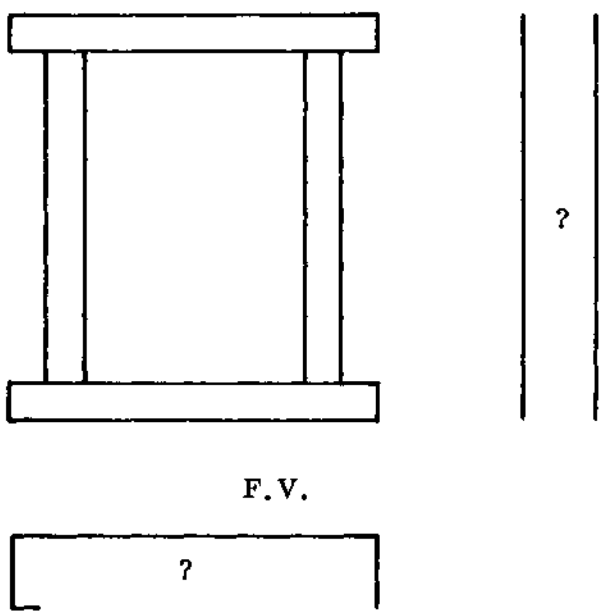

4

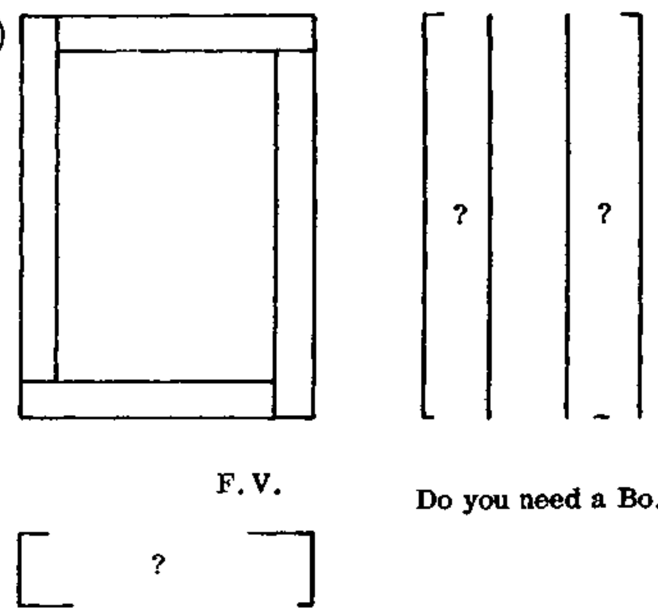

Do you need a Bo.V. ?

- COMPLETE ALL VIEWS.
- NAME ALL VIEWS.
- MARK ALL DIMENSIONS.
- MAKE OBLIQUE DRAWINGS. SCALE 1 : 2 (cm)
- PRACTICE DIFFERENT POSITIONS.
- TAKE DIFFERENT DIMENSIONS AND DIFFERENT SCALES.

N.P.V.C.

40 MIN | 19

EXERCISE: OBLIQUE TO ORTHOGRAPHIC

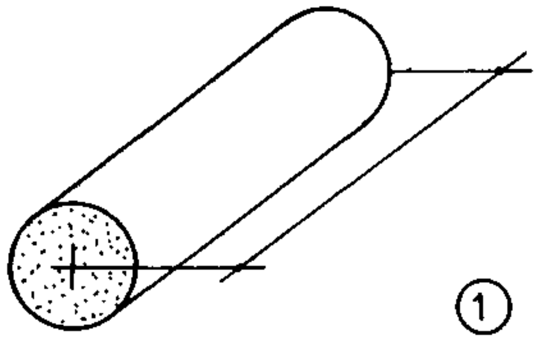

1

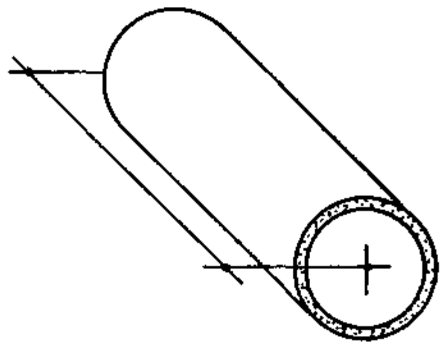

2

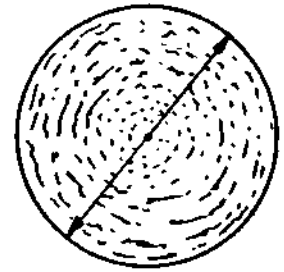

3

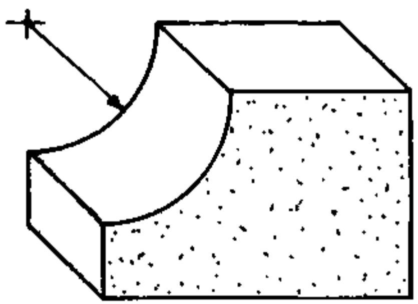

4

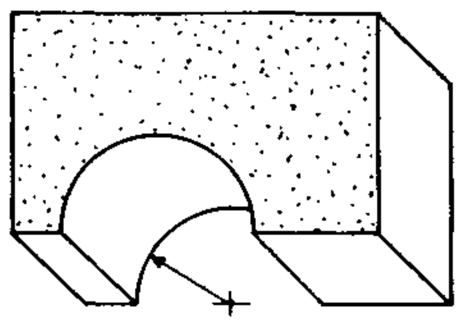

5

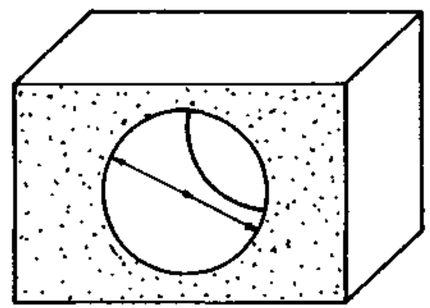

6

- MARK IN ALL DIMENSIONS.
- MAKE AN ORTHOGRAPHIC DRAWING OF EACH BLOCK. SCALE 2:1 (cm)

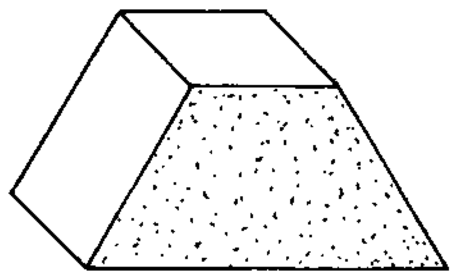

7

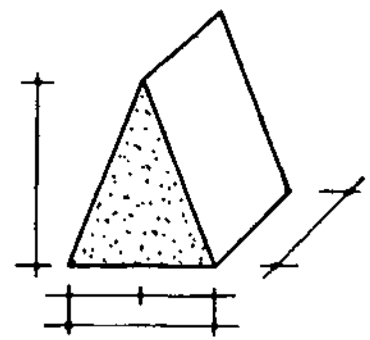

8

N . P . V . C.	
20.	60 MIN.

EXERCISE: ORTHOGRAPHIC TO OBLIQUE

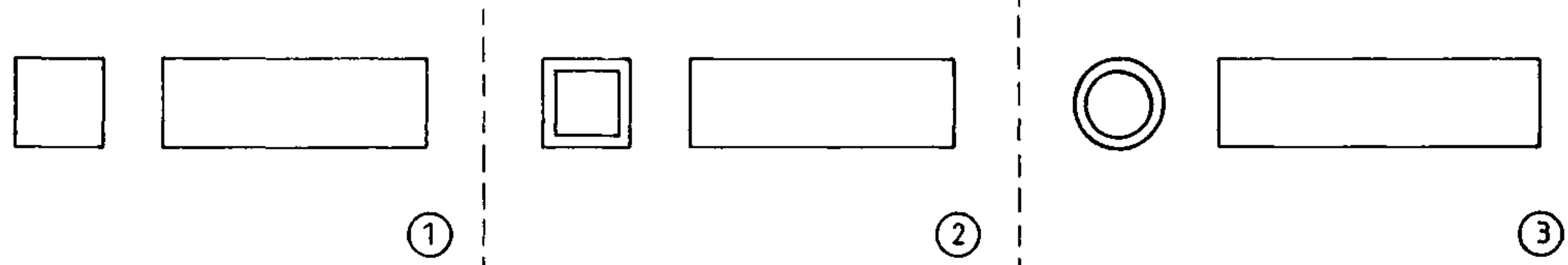

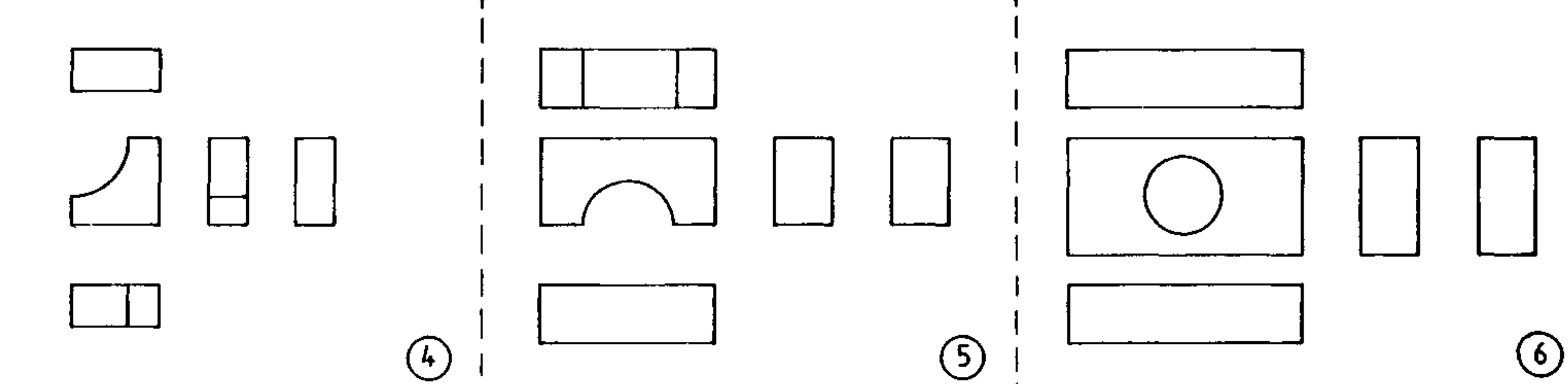

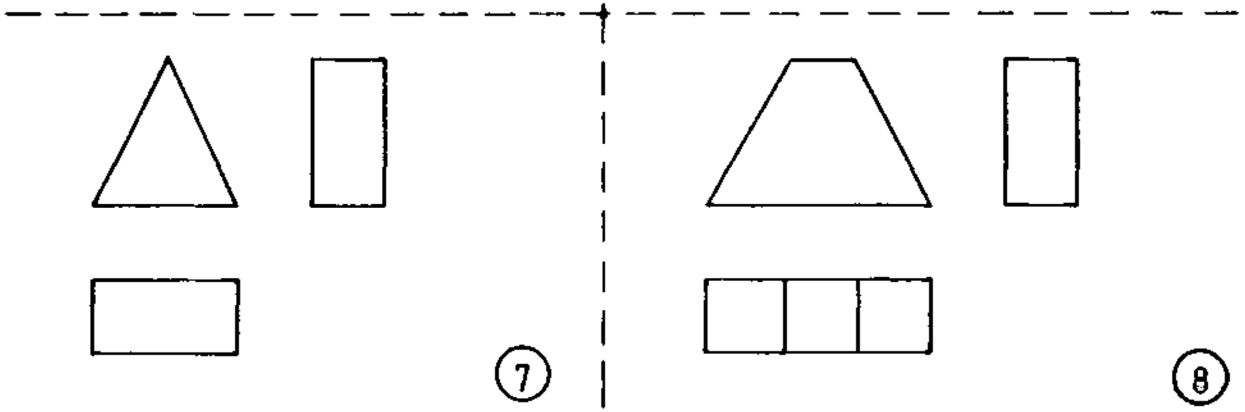

- NAME ALL VIEWS.
- MARK ALL DIMENSIONS.
- MAKE OBLIQUE DRAWINGS

1:FV-TV-LSV	2:FV-BoV-RSV
3:FV-TV-RSV	4:FV-TV-RSV
5:FV-BoV-LSV	6:FV-BoV-RSV
7:FV-BoV-LSV	8:FV-TV-RSV

N . P . V . C.	
40 MIN.	21.

SCALE DRAWING

Before you start to make any kind of workpiece, it is necessary to make a drawing showing how it should be made. This drawing is usually called the "layout". When making a layout it is important to use the correct scale. The scale tells you how much bigger or smaller the actual object is, compared to the drawing.

- Large objects have to be drawn smaller than they actually are: in this case you have to use a REDUCED SCALE.
- Very small objects have to be drawn larger than they actually are so that all the details can be seen. In this case you have to use an ENLARGED SCALE.
- If the object is neither very large nor very small, it may be drawn as it actually is. In this case you use FULL SCALE.

SCALES

The scale affects the size of every side of the object in the drawing. Make sure that you draw all lengths, widths, and to the correct scale.

- EXAMPLES OF SCALE: A scale of 1 : 5 (mm) tells you that 1 mm on the drawing represents 5 mm in real life. In other words, the drawing shows the object as 1/5th of its real size, with all dimensions in millimetres.

  A scale of 2 : 1 (cm) tells you that 2 cm on the drawing represents 1 cm in real life. In other words, the drawing shows the object as twice its actual size, and all the dimensions are in centimetres.

  What do the scales 1 : 10 (m) and 5 : 1 (cm) tell you?

- COMMON SCALES: Some commonly used scales are 1 : 2; 1 : 5; 1 : 10; 1 : 20; and 1 : 50.

SCALE DRAWING

NOTICE, THE NUMBERS REMAIN THE SAME.

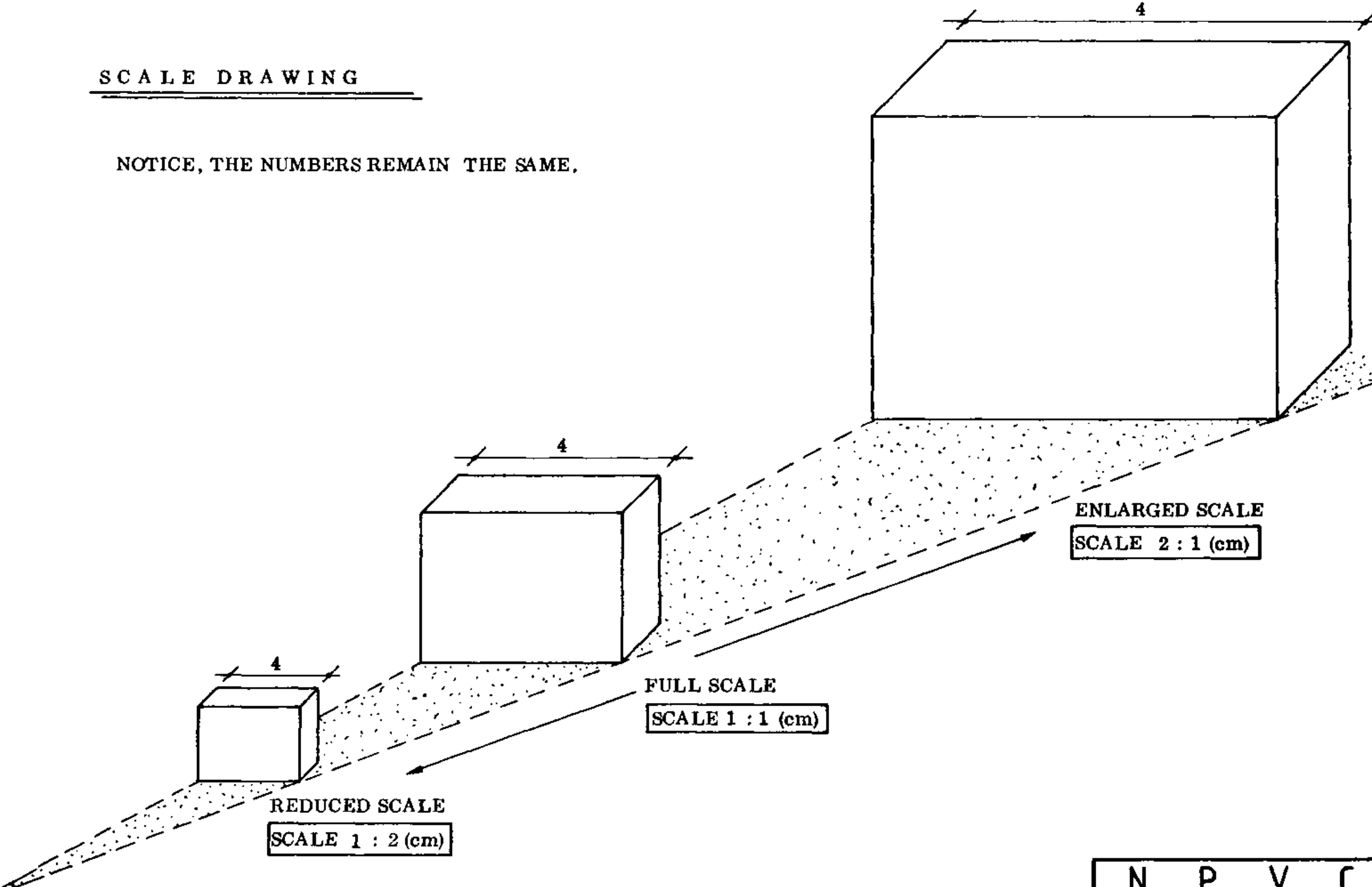

INSIDE AND OUTSIDE DIMENSIONS

If you measure the inside of a box, you will find the measurements are smaller than the outside measurements. This is because of the thicknesses of the sides of the box. Look at the drawing on the next page (A) and note that the outside length of the box is equal to the inside length plus TWICE the thickness of the walls. The same applies to houses: the outside dimensions of a room will always be larger than the inside dimensions.

- EXAMPLE: A box has inside dimensions of 30 x 55 cm and is made of boards which are 3 cm thick. What are the outside dimensions of this box? (see A).

FRAMES

Many articles such as windows and doors can be bought as ready made pieces. These have certain sizes. Both doors and windows usually need a frame around them, and this has to be taken into account when the plans are made for the house.

Figs. B and C on the next page show some ready made articles. Below each you see the same article with a frame around it. In both cases the frame is 6 cm thick.

Fig. B shows a single article such as a casement. The frame goes all the way around the casement, which means that the window opening in the wall must be 12 cm longer and 12 cm higher than the casement itself, so that there is room for the frame.

Fig. C shows a pair of casements. In this case the frame goes all the way around the casements and also between them. This means that the window opening in the wall must be 18 cm longer and 12 cm higher than the casement itself.

EXERCISE: IN AND OUTSIDE DIMENSIONS

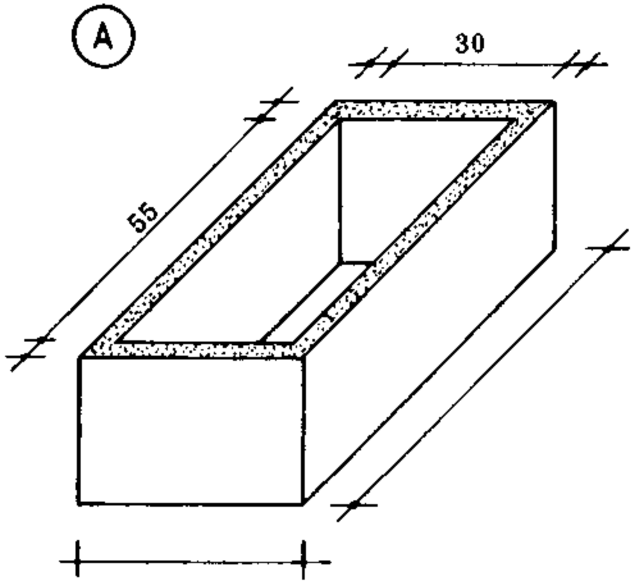

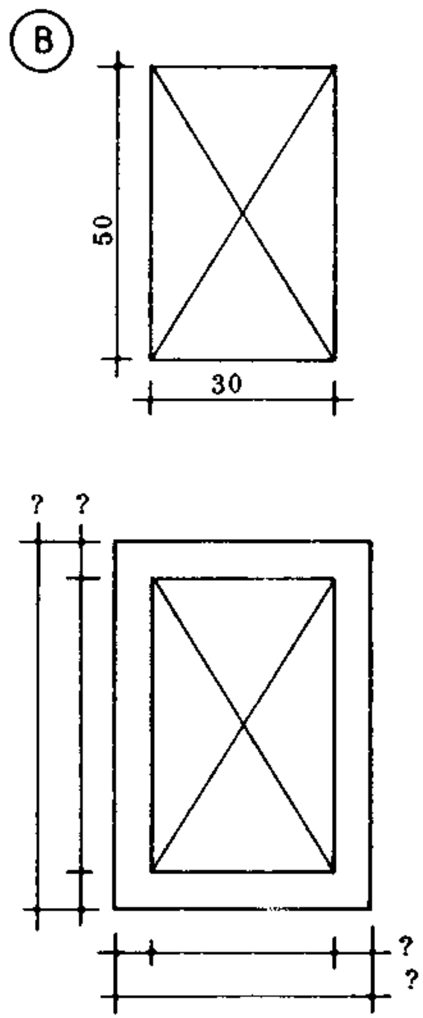

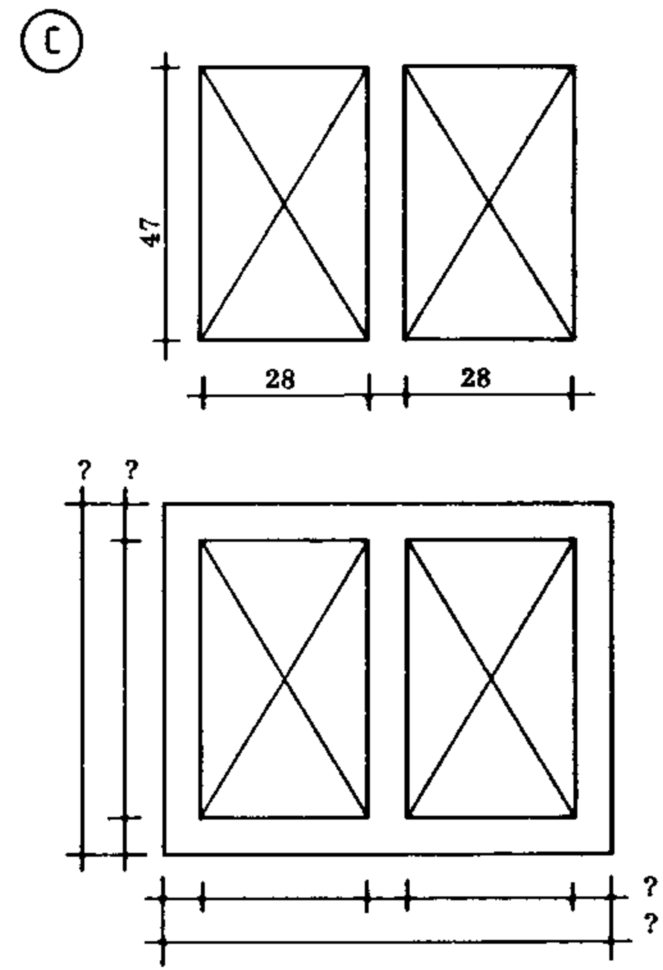

A - THE BOX HAS WALLS THAT ARE 3 cm THICK.

MARK IN THE OUTSIDE DIMENSIONS.

B - MARK IN ALL DIMENSIONS.

C - MARK IN ALL DIMENSIONS.

N. P. V. C.

DESIGNING FROM SKETCHES

You will often have people coming to you with a rough sketch of something they want you to make, for example a set of casements. In order to make the frame around the casements and to know the size of the opening which has to be made in the wall, there are two important things to notice about most rough sketches:

- The dimensions are the outside dimensions of the casements.
- The thickness of the frame has been left out.

Someone may come to you with a rough sketch of a complicated box with many partitions. In order to be able to construct the box, you have to notice two important things about the sketch:

- The dimensions are the inside dimensions of the partitions.
- The thickness of the partitions and the sides of the box has been left out.

As a craftsman you have to turn these types of sketches into good plans. The plans you draw should have inside and outside dimensions, as well as the thicknesses of the members of the frame or partitions.

- BUILD UP YOUR PLAN IN THE FOLLOWING WAY:
  - Draw two planning lines, one vertical and one horizontal (lines A and B).
  - On line A, start at the left and mark the thickness of the frame member; then the width of the casement. Next mark the thickness of the central frame member and then the width of the right casement. Finally mark the thickness of the right frame member.
  - Starting from the bottom, do the same thing on line B. Your marks should indicate in order: frame; casement; frame; casement; frame; casement; frame.
  - Transfer lines A and B onto your drawing paper so that they form a right angle (page 28).
  - You should now be able to finish the drawing as shown on page 29.

In the original sketch here, it looks as though the large space at the top of the sketch was 259 cm long. On your final drawing you will see that it is 269 cm long. Can you see why?

ORIGINAL SKETCH OF CASEMENT ARRANGEMENT

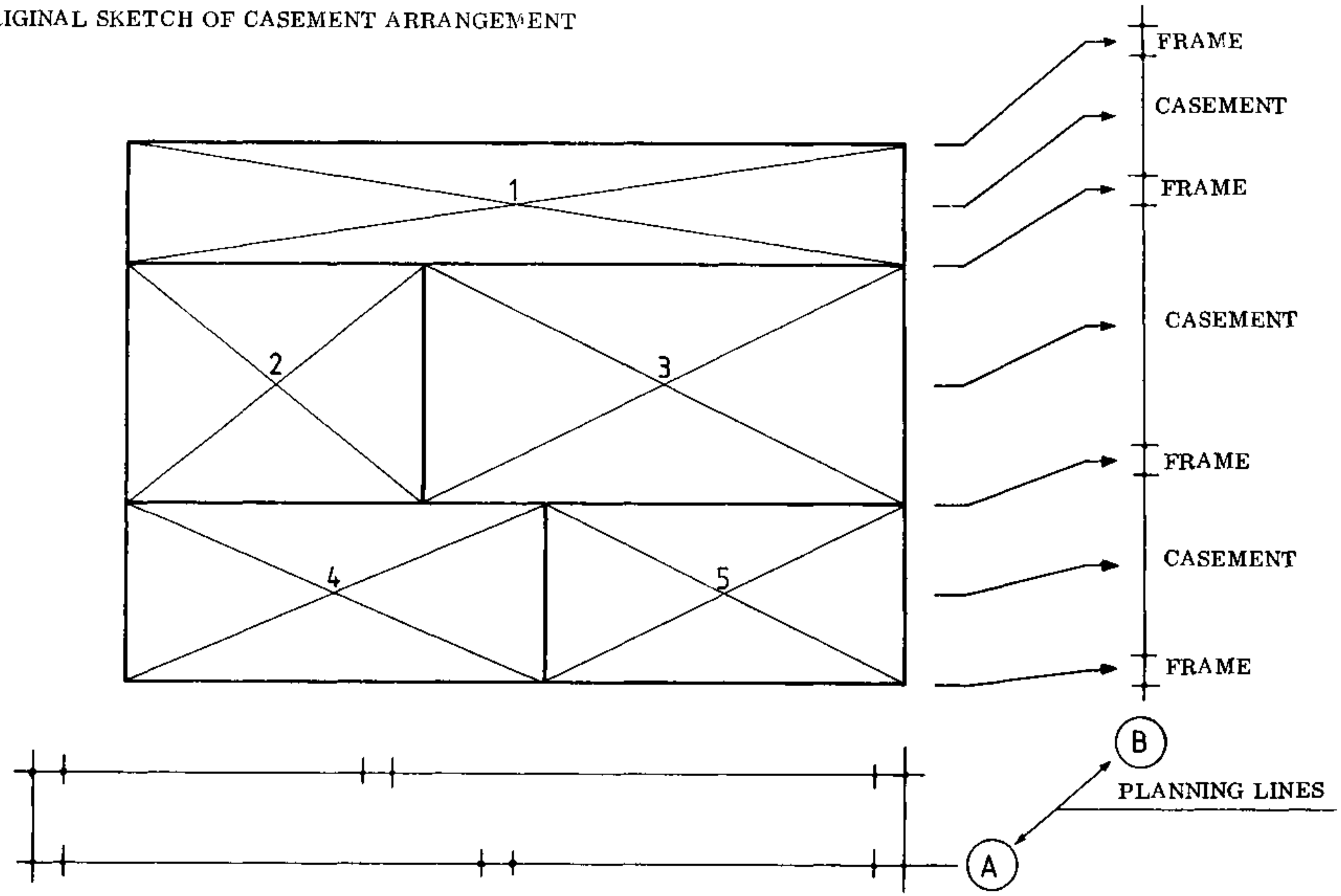

- SKETCH IS DRAWN IN A SCALE OF 1 : 20 (cm).
- FRAME MEMBERS ARE 10 cm THICK.

- MARK IN ALL DIMENSIONS!

N.P.V.C.

27.

PLANNING LINES FOR CASEMENT ARRANGEMENT

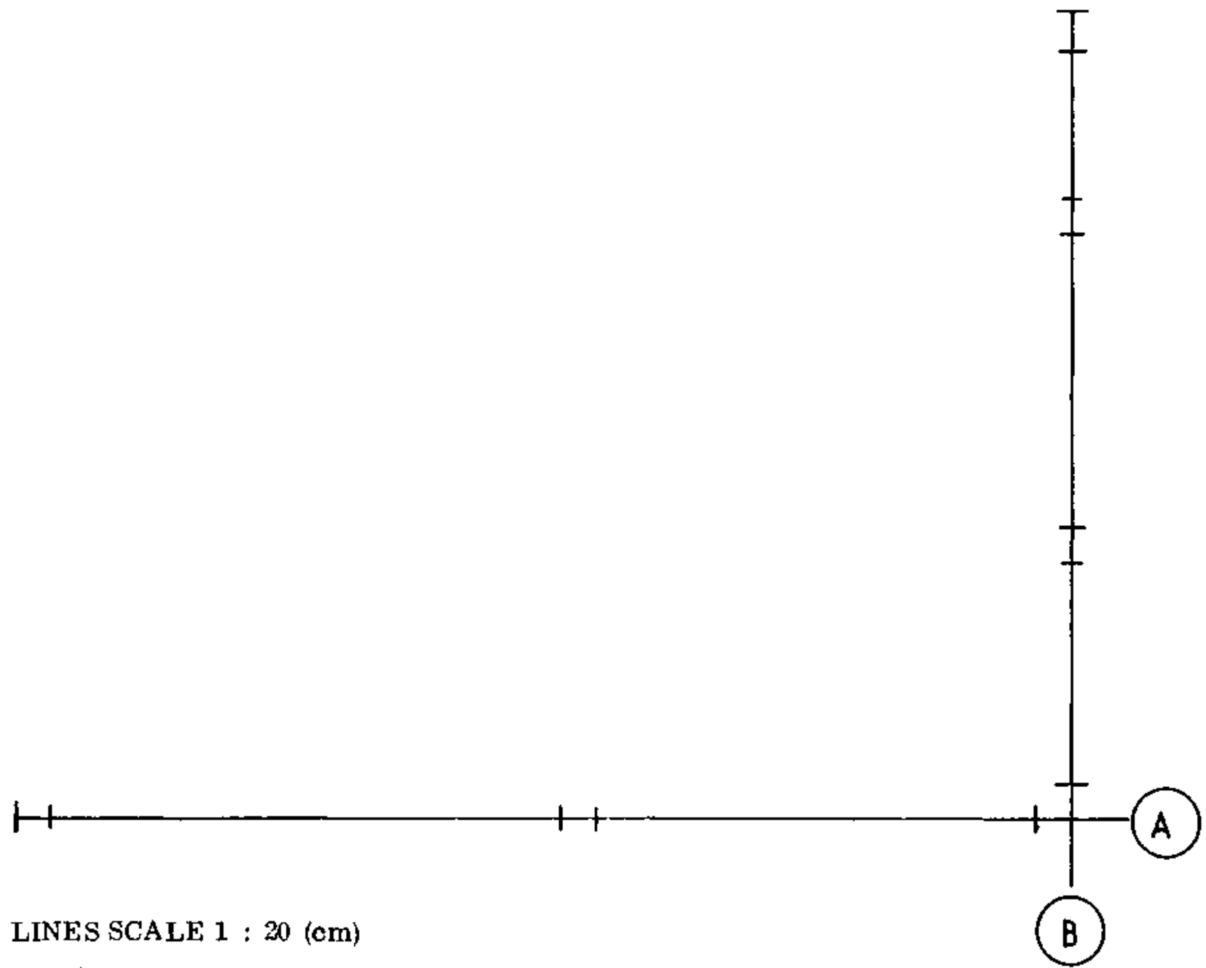

- PLANNING LINES SCALE 1 : 20 (cm)
- FINISH THIS PLAN (see page 29)

FINISHED PLAN OF CASEMENT ARRANGEMENT

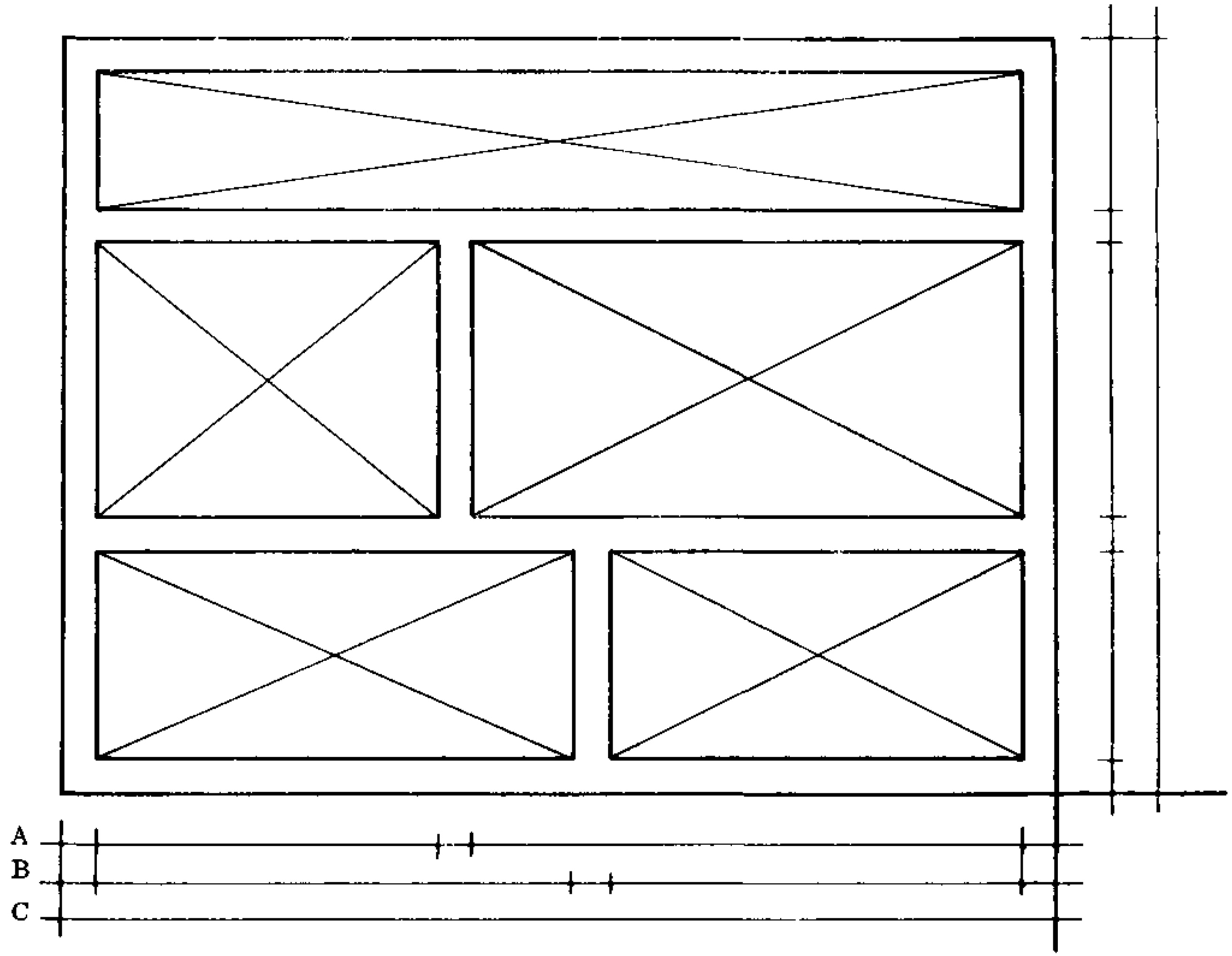

- DRAWING SCALE 1 : 20 (cm)
- MARK IN ALL DIMENSIONS.

DESIGN

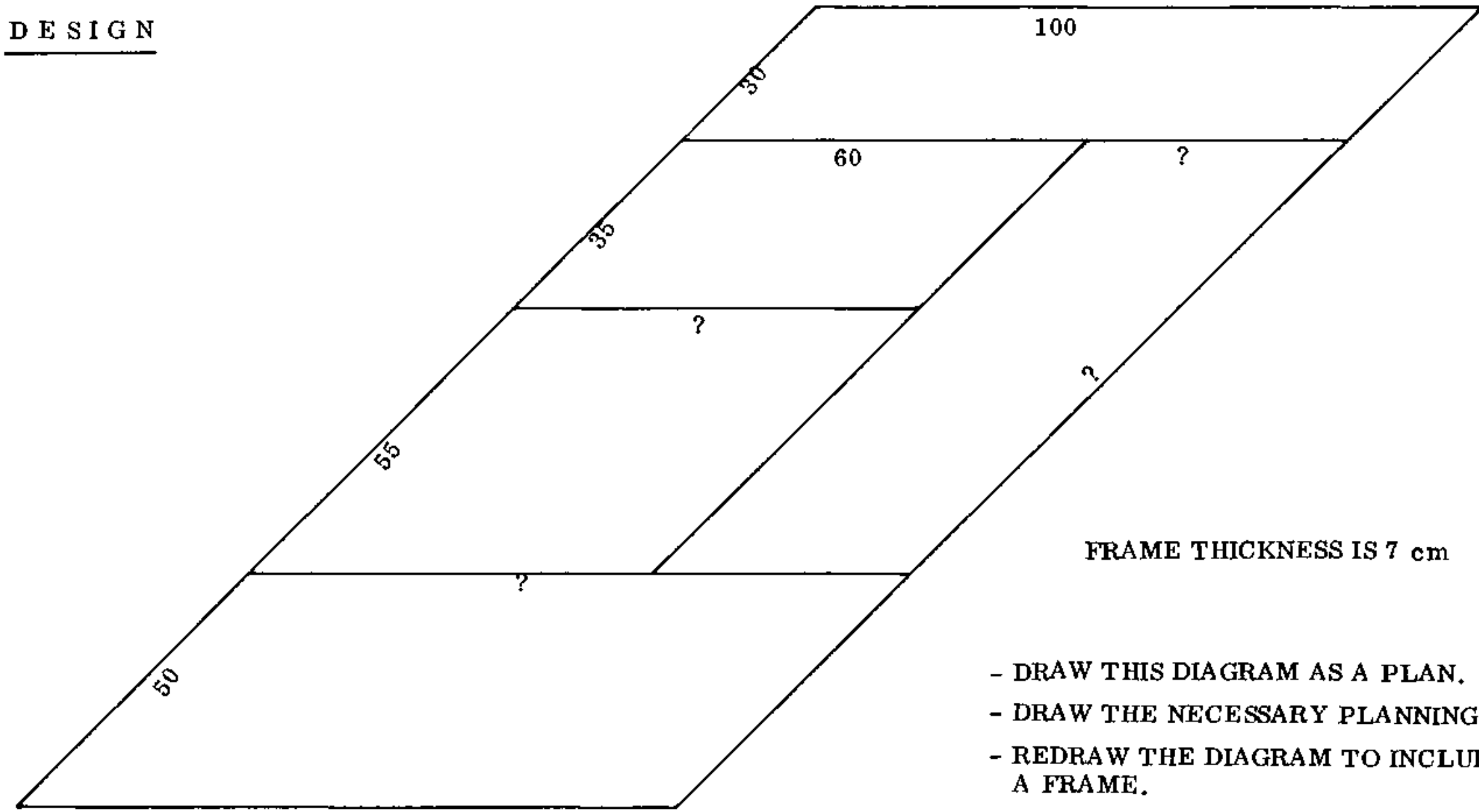

FRAME THICKNESS IS 7 cm

- DRAW THIS DIAGRAM AS A PLAN.
- DRAW THE NECESSARY PLANNING LINES.
- REDRAW THE DIAGRAM TO INCLUDE A FRAME.

N . P . V . C .	
30.	30 MIN.

DESIGN

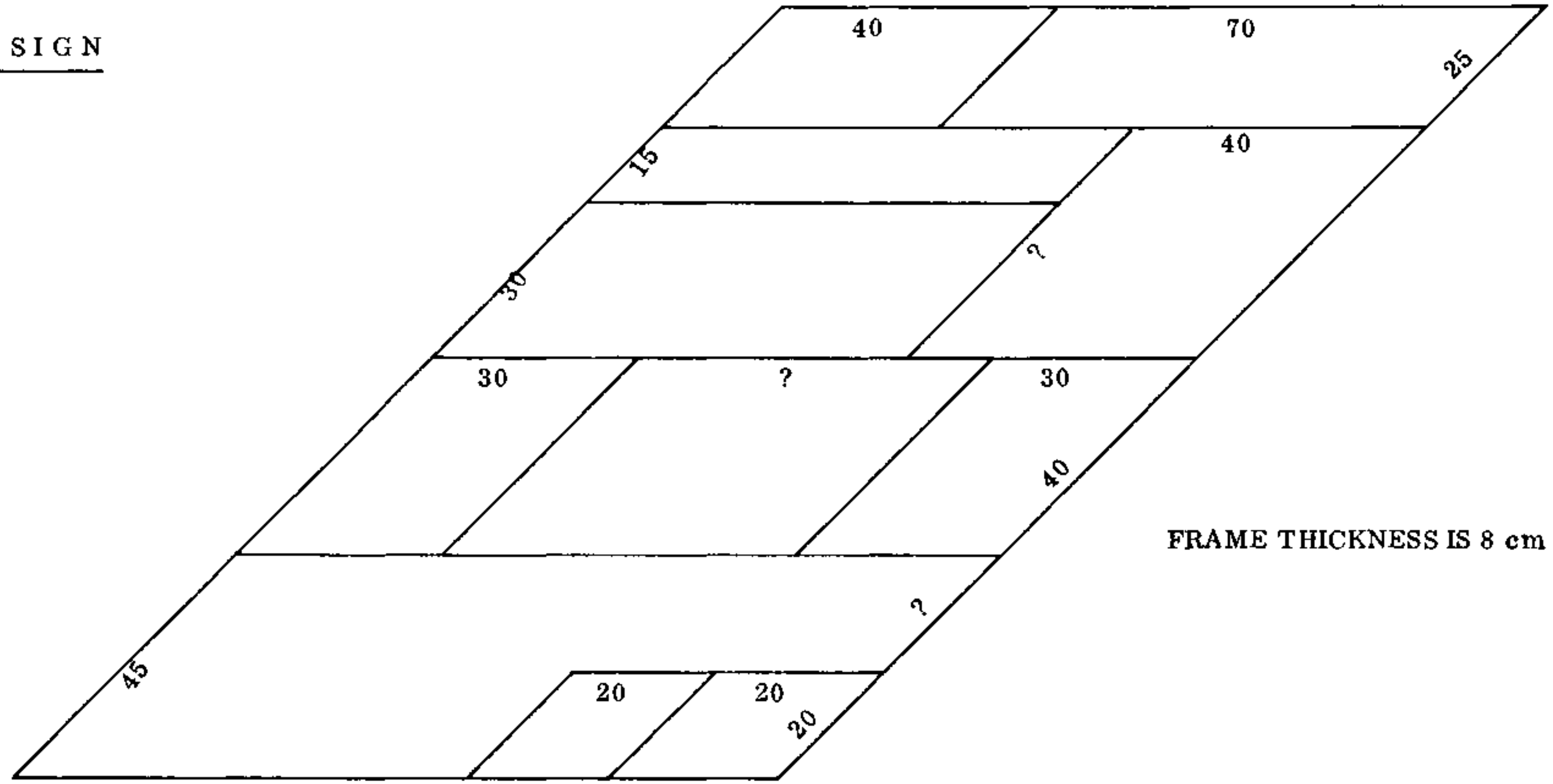

FRAME THICKNESS IS 8 cm

- DRAW THIS DIAGRAM AS A PLAN.
- DRAW THE NECESSARY PLANNING LINES.
- REDRAW THE DIAGRAM TO INCLUDE A FRAME.

N . P . V . C .	
35 MIN.	31.

1

OBLIQUE DRAWING OF A BOX-LIKE OBJECT

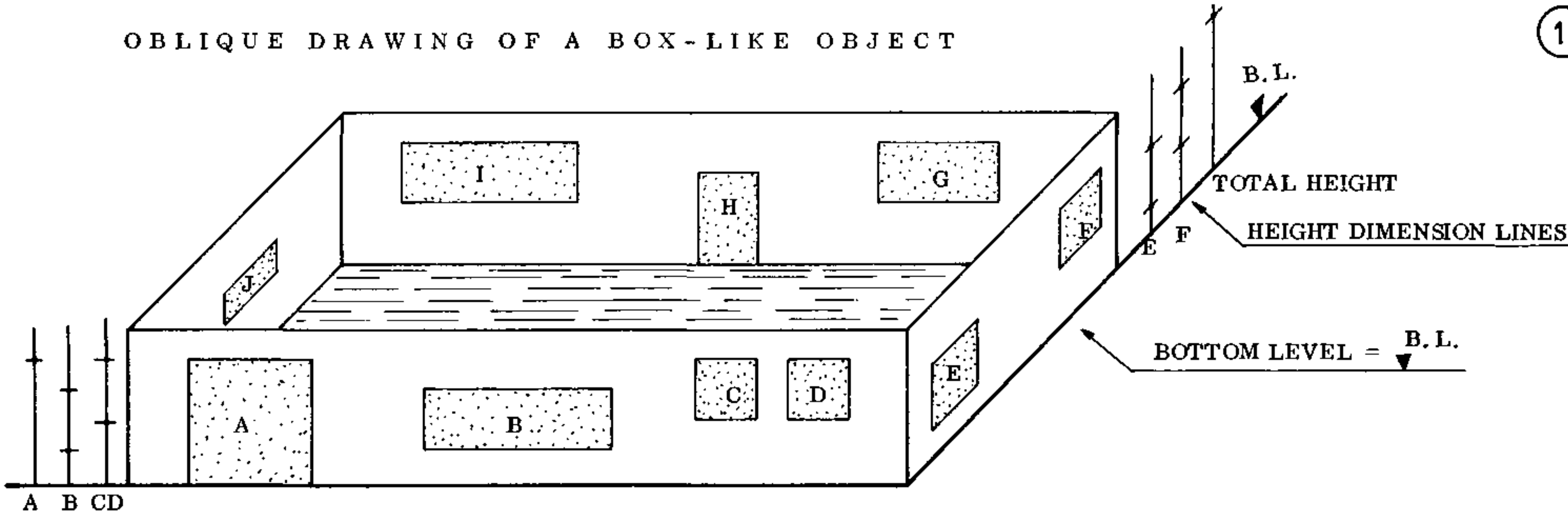

2

TECHNICAL DATA

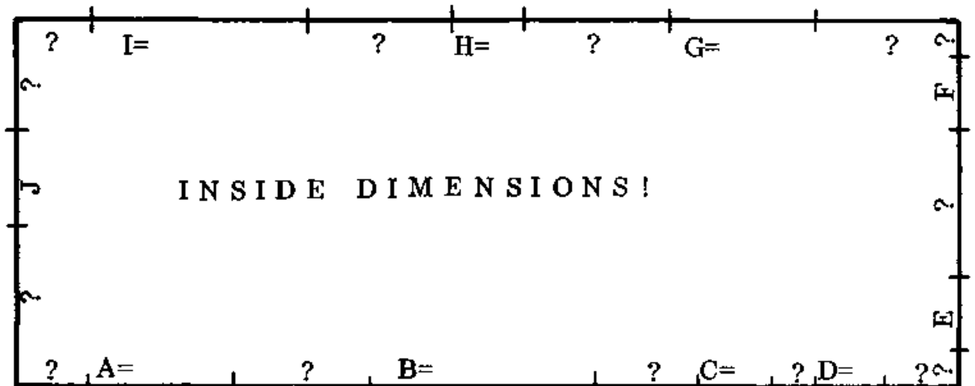

SKETCH PLAN

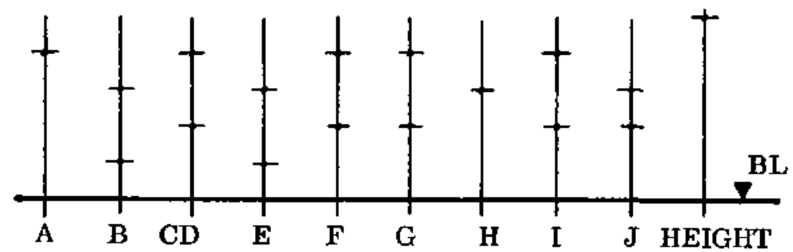

SKETCH = SCALE 1 : 10 (cm)

- FILL IN ALL DIMENSIONS.

- FULL DRAWING ON PAGE 33.

ORTHOGRAPHIC DRAWING

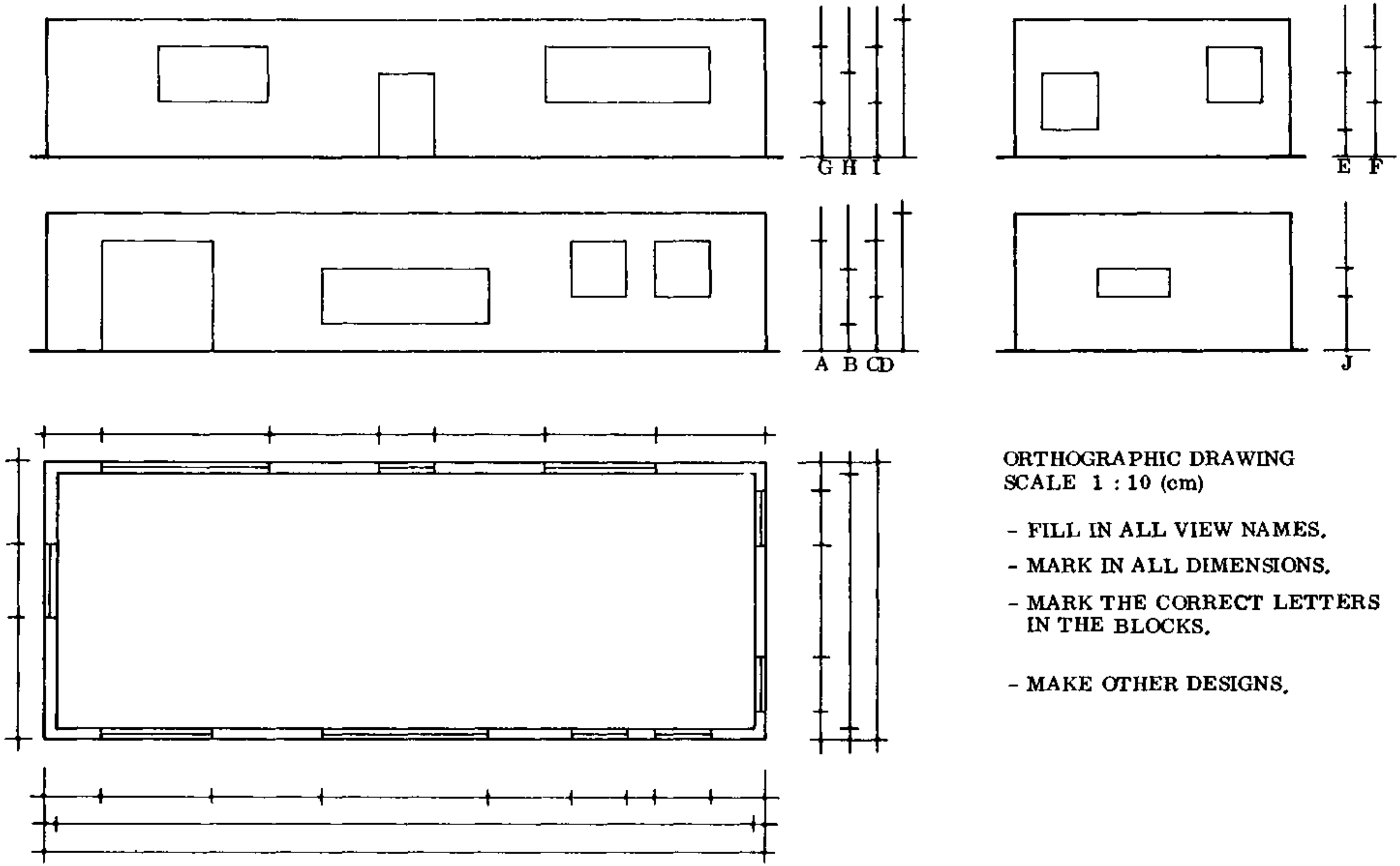

ORTHOGRAPHIC DRAWING
SCALE 1 : 10 (cm)

- FILL IN ALL VIEW NAMES.
- MARK IN ALL DIMENSIONS.
- MARK THE CORRECT LETTERS IN THE BLOCKS.
- MAKE OTHER DESIGNS.

N . P . V . C .	
2 HOURS	33.

CROSS SECTIONS

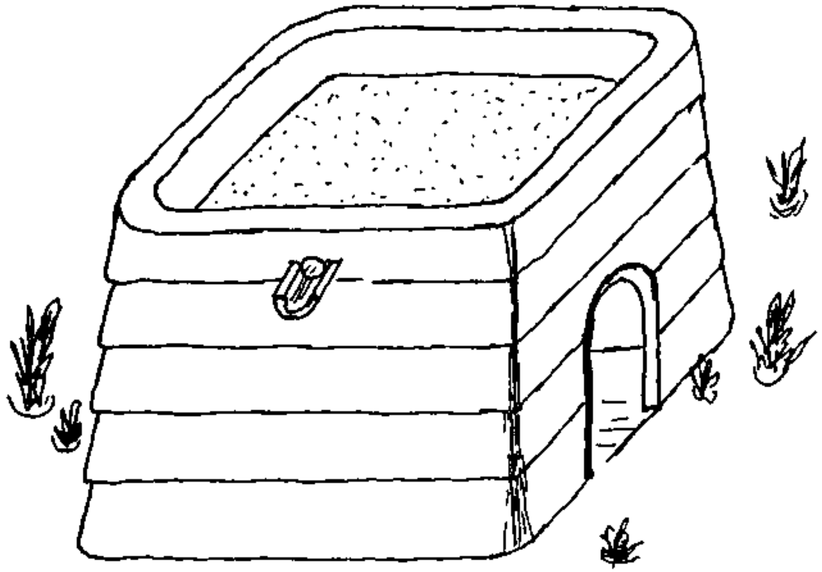

SIDE VIEW OF A HOUSE

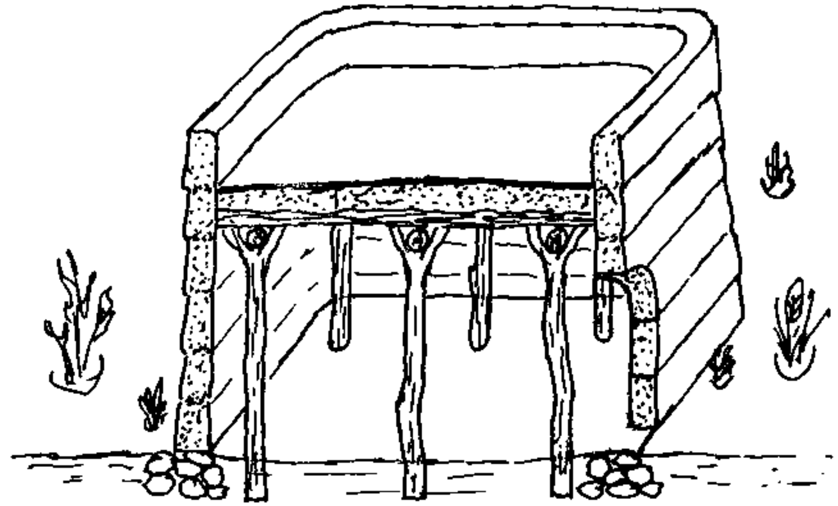

THE CROSS SECTION SHOWS THE INTERIOR OF THE WHOLE HOUSE

MANGO

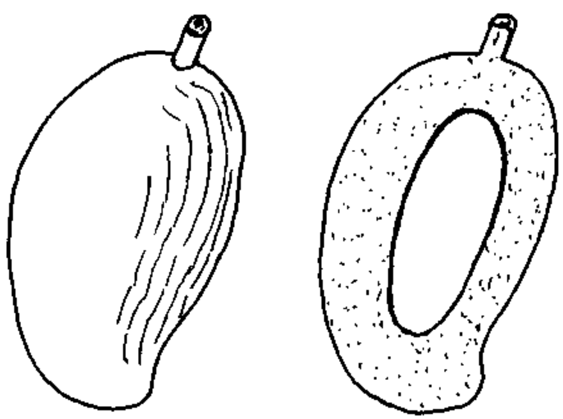

VIEW

IN THE CROSS SECTION YOU CAN SEE THE FLESH AND THE STONE

COCONUT

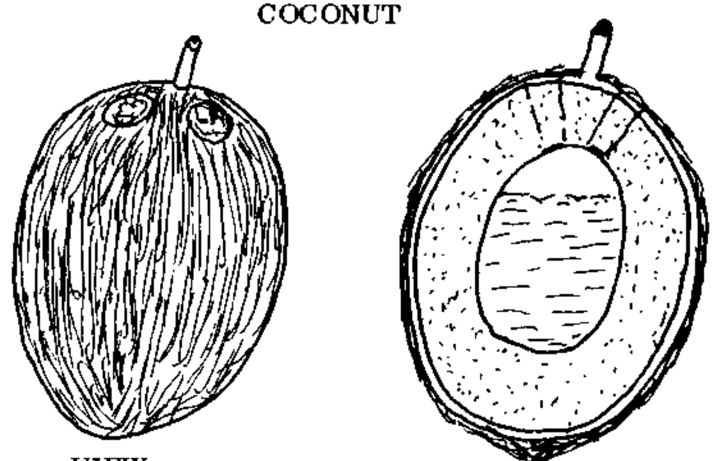

VIEW

IN THE CROSS SECTION YOU CAN SEE THE SHELL, THE FLESH AND THE JUICE

N.P.V.C.	
34.	

HORIZONTAL SECTIONS AND CROSS SECTIONS

1

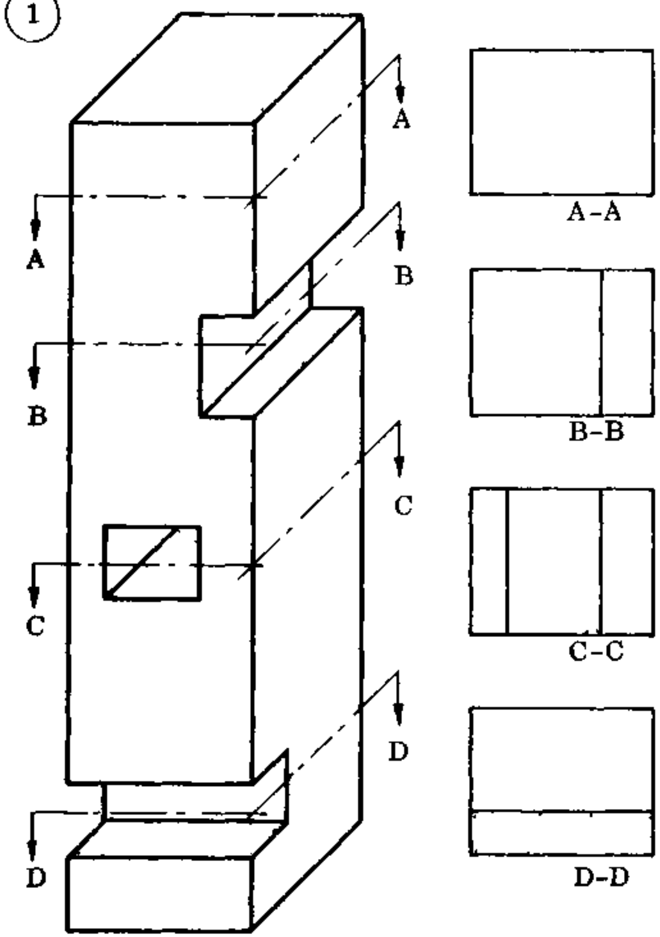

HORIZONTAL SECTIONS

- AT SECTION C-C YOU CAN SEE THAT THE HOLE GOES THROUGH THE BLOCK.
- THE ARROW SHOULD POINT IN THE DIRECTION YOU WANT TO SHOW.

2

COMPLETE THESE CROSS SECTIONS

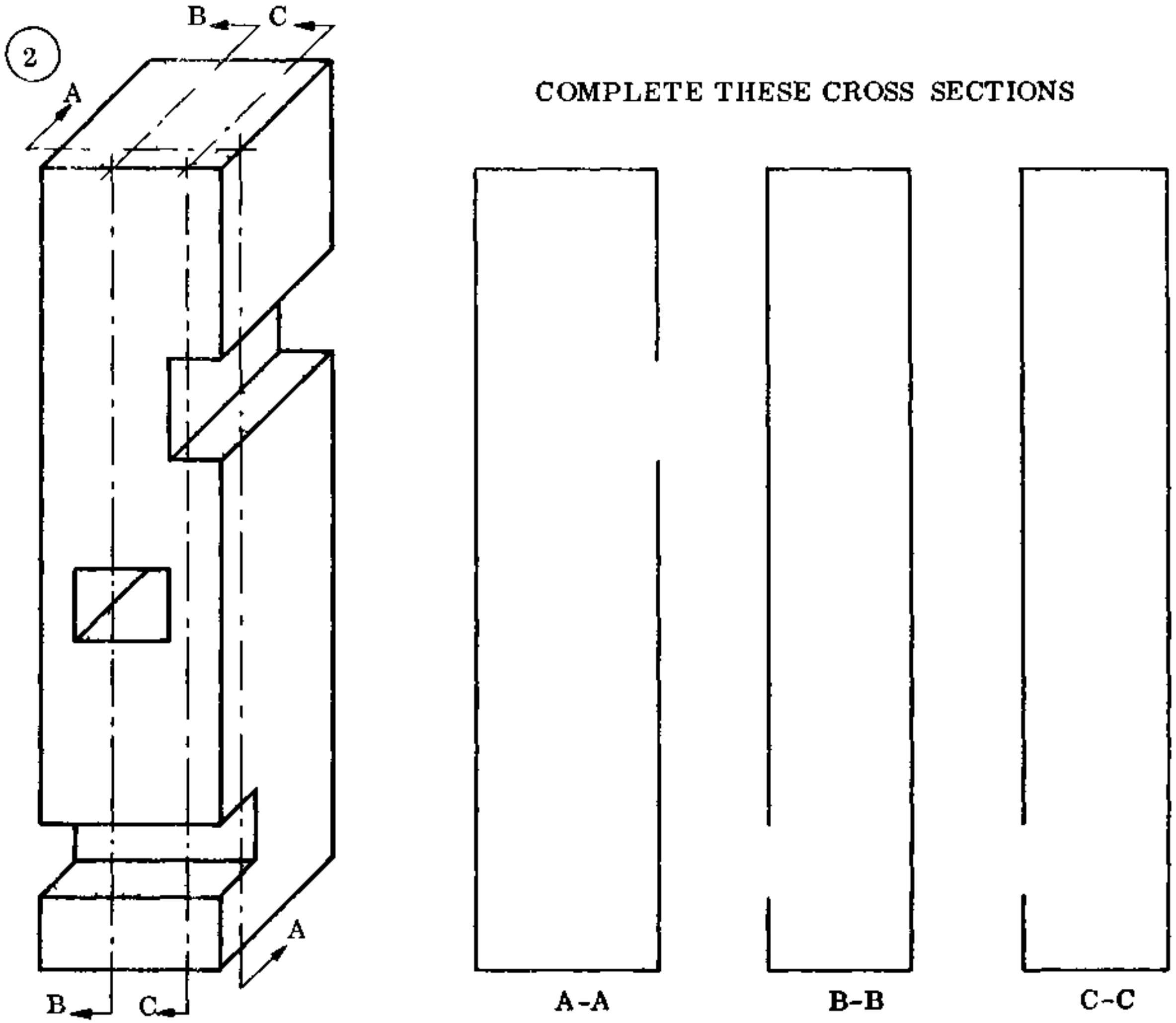

AS A RULE TAKE THE SECTIONS AT THOSE POINTS WHICH WILL SHOW THE GREATEST AMOUNT OF DETAIL.

N. P. V. C.

35.

SKETCHING

You will often find that you will have to make a rough drawing in which accurate dimensions are not really necessary. In this case it is usually best to make a sketch. To sketch means to make a drawing without using drawing instruments like rulers, etc. You will find that this type of drawing is much quicker than technical drawing with the drawing instruments. However, sketching is probably harder than technical drawing, especially at first. It requires a steady hand, a sense for proportions, and an appreciation of detail.

Sketching is the art of putting ideas into pictures and is especially useful for understanding technical drawings and making rough plans.

The only equipment you need for sketching is an H pencil, an eraser, and some paper. Use plain paper for sketching.

- TECHNIQUE: Practice makes perfect. Practice drawing straight lines and curves. After a while you will find that your straight lines look almost as if they were drawn with a ruler! On the next page you can see the best way to draw horizontal, vertical, and inclined lines, and the best way to draw a circle.

- REMEMBER:

  - Take your time while sketching, be careful.
  - Don't try to draw long lines with one motion.
  - Rest only the side of your hand on the paper.
  - Don't turn the paper while you are sketching. You should be able to draw all your lines with the paper in the same position.

EXERCISE: FREE HAND SKETCHING

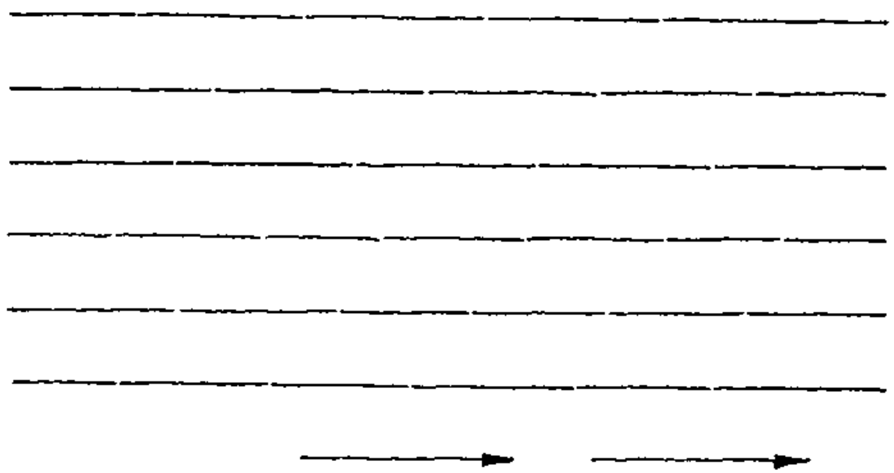

HORIZONTAL LINES

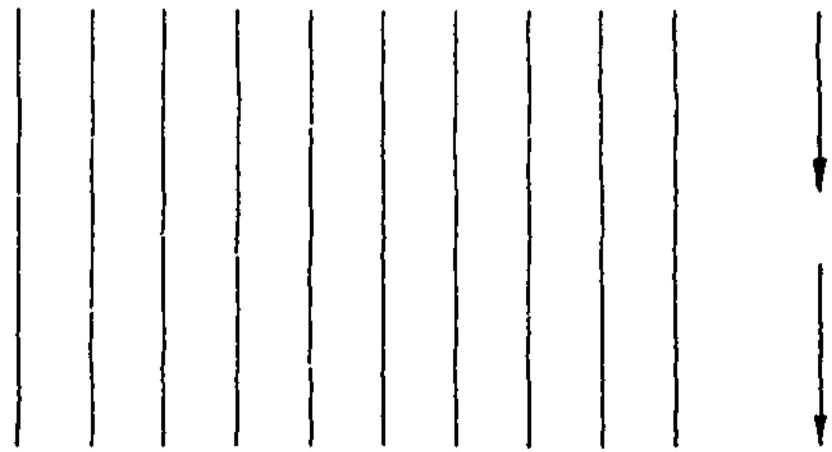

VERTICAL LINES

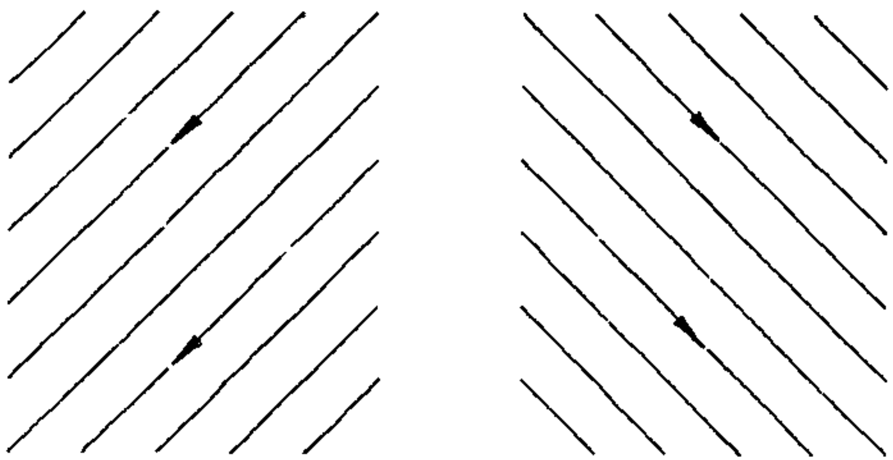

INCLINED LINES

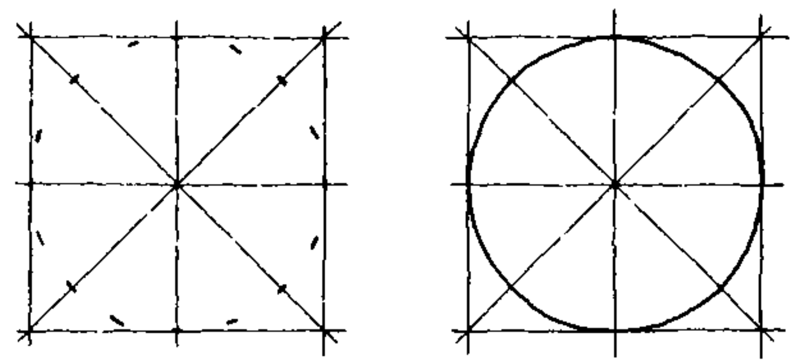

CIRCLES

NOTICE: THE DIFFERENT DIRECTIONS IN WHICH THE LINES ARE DRAWN.
LINES ARE NOT ONE LONG LINE.

N.P.V.C.

EXERCISE: FREE HAND SKETCHING

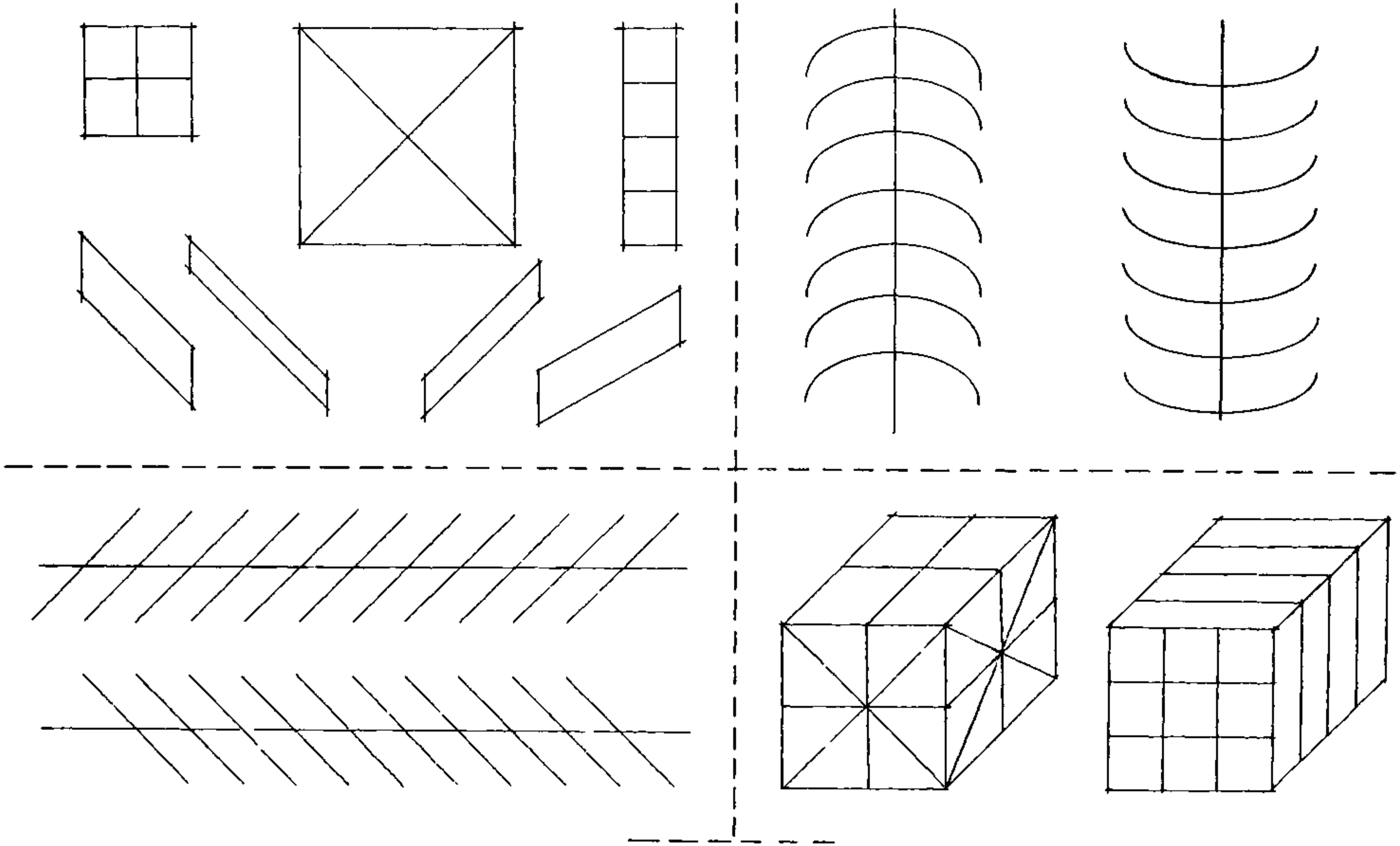

REPEAT THESE EXERCISES, USING DIFFERENT ANGLES.

DRAW ARROWS TO SHOW THE DIRECTION IN WHICH YOU SKETCH ALL OF THESE LINES.

N . P . V . C .	
38.	

EXERCISE: FREE HAND SKETCHING

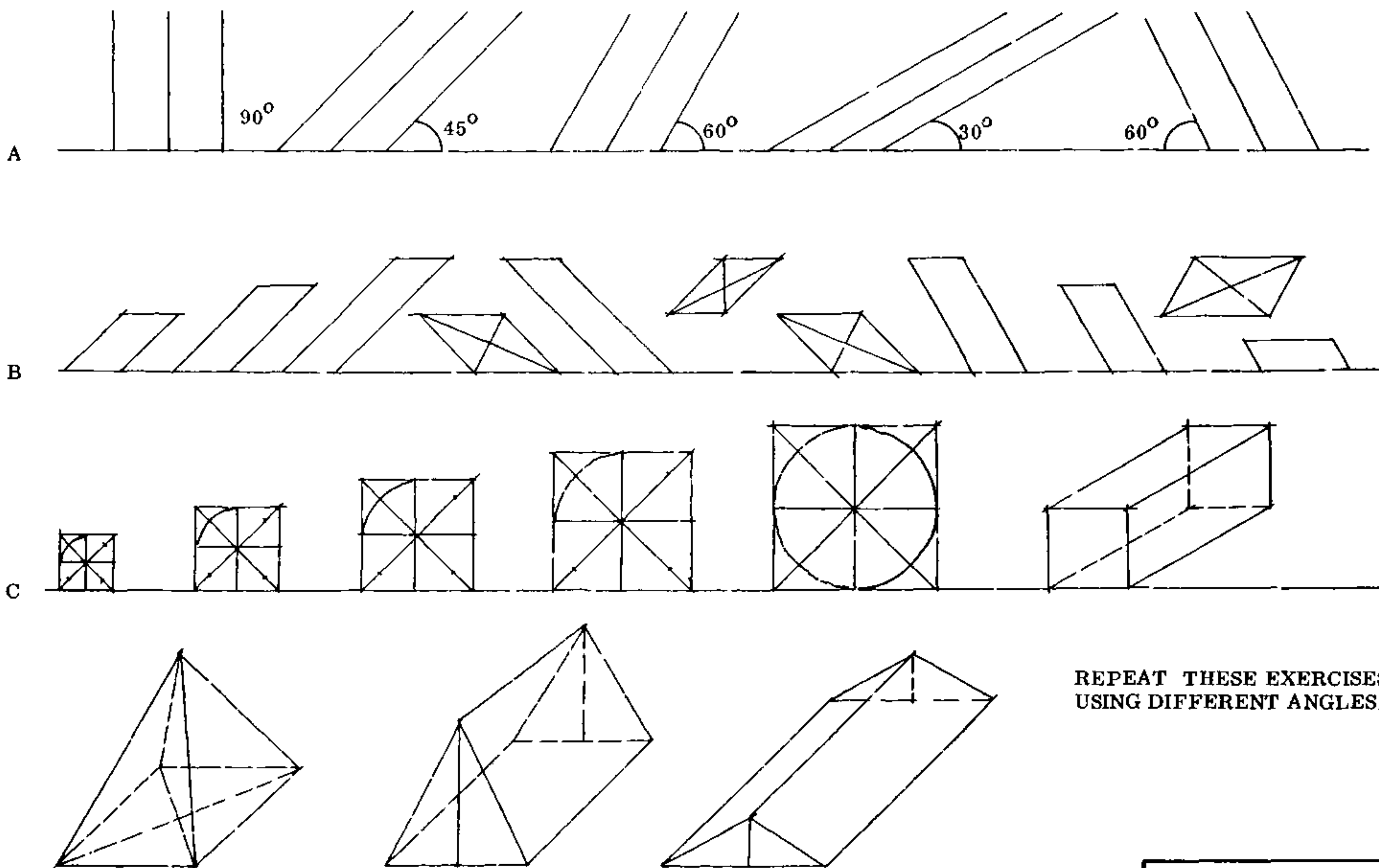

REPEAT THESE EXERCISES
USING DIFFERENT ANGLES.

WINDOW FRAME (BASIC LAYOUT)

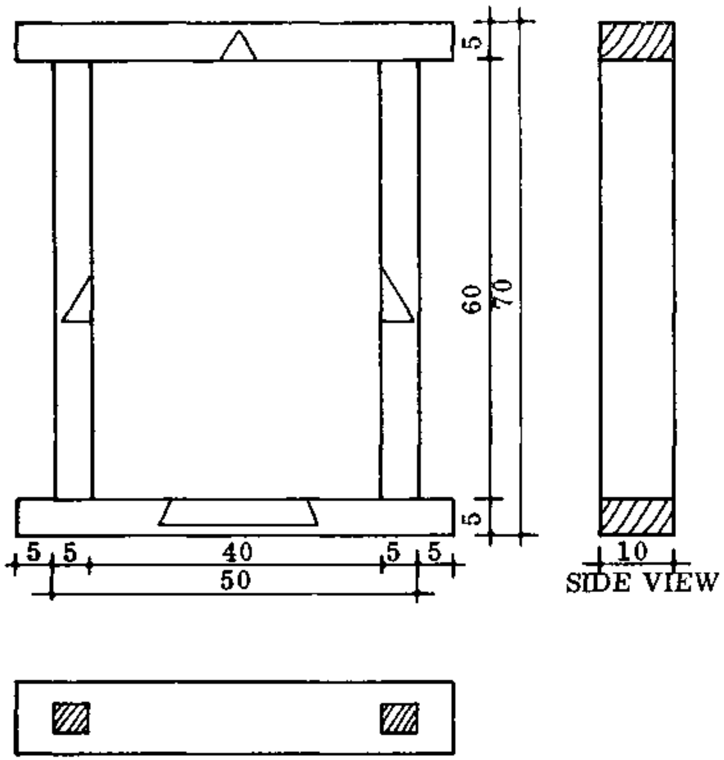

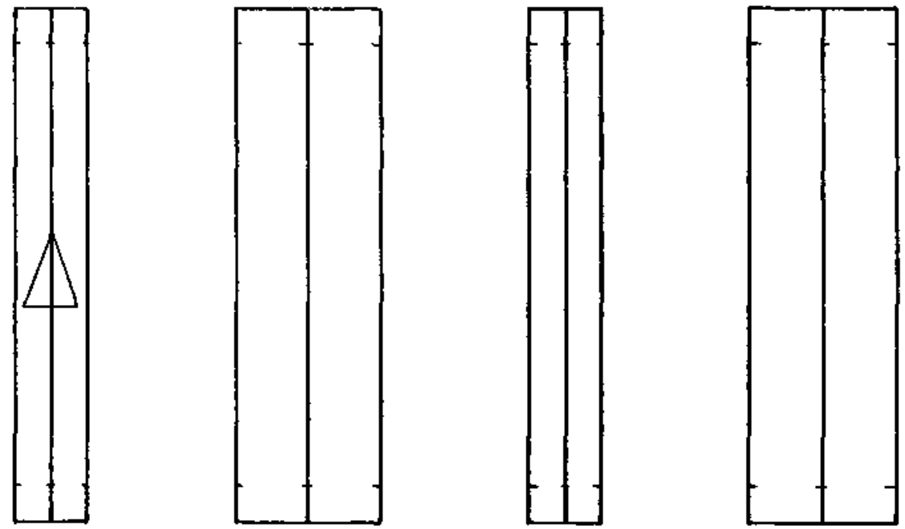

MARKING OUT THE JOINTS

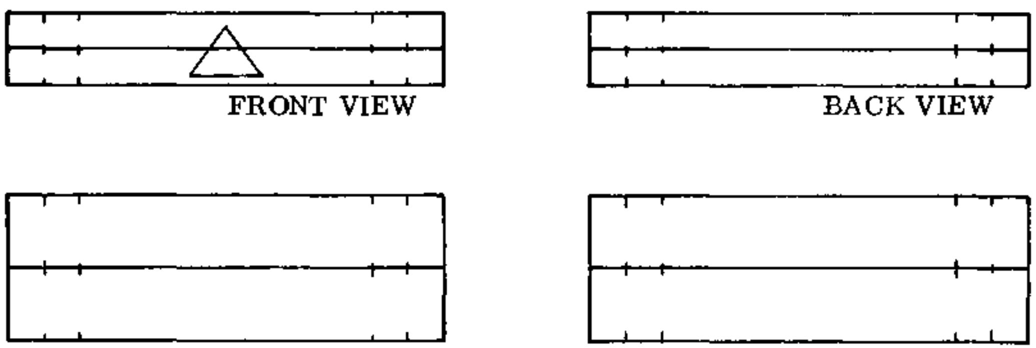

SIGN FOR MORTICE-----------

SIGN FOR END GRAIN---------

FACE MARK -------------

INSIDE AND OUTSIDE DIMENSIONS OF FRAME ARE VERY IMPORTANT (in cm).

MAKE SURE THAT THE LINES ON ALL VIEWS MATCH UP WITH THE FRONT VIEW.
CHECK THIS WITH THE AID OF A RULER.

<u>MARK IN ALL MORTICES AND TENONS.</u>

N.P.V.C.

40.

WINDOW FRAME (MARKED OUT FOR JOINTS)

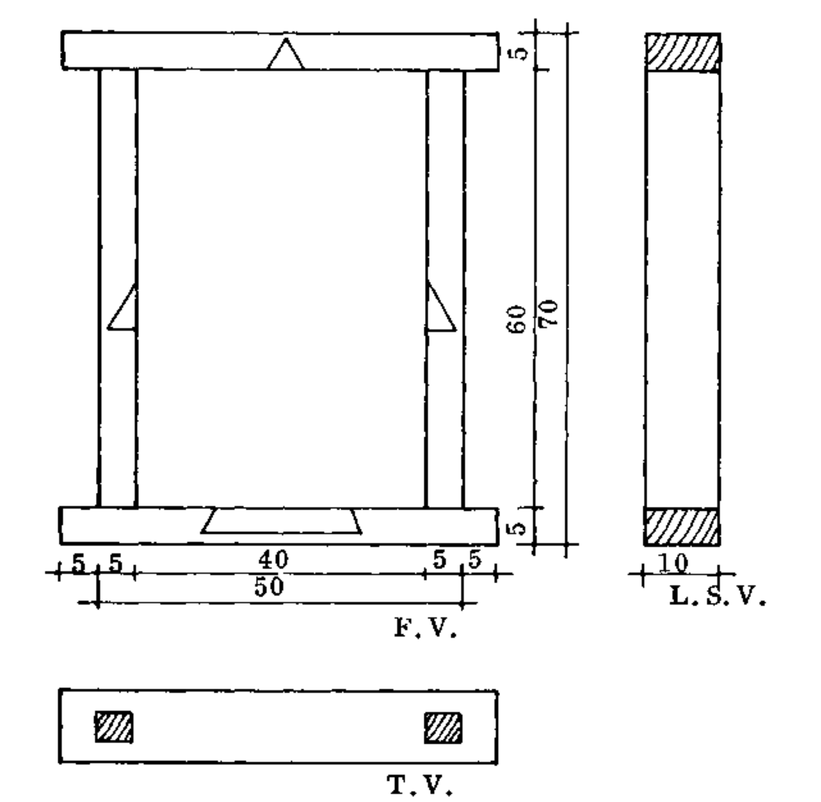

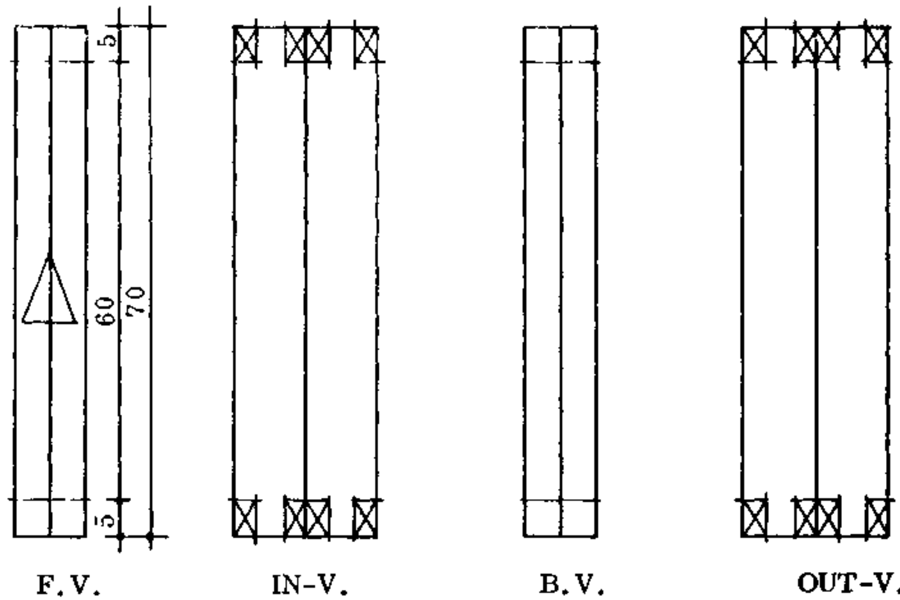

MARKING OUT THE JOINTS

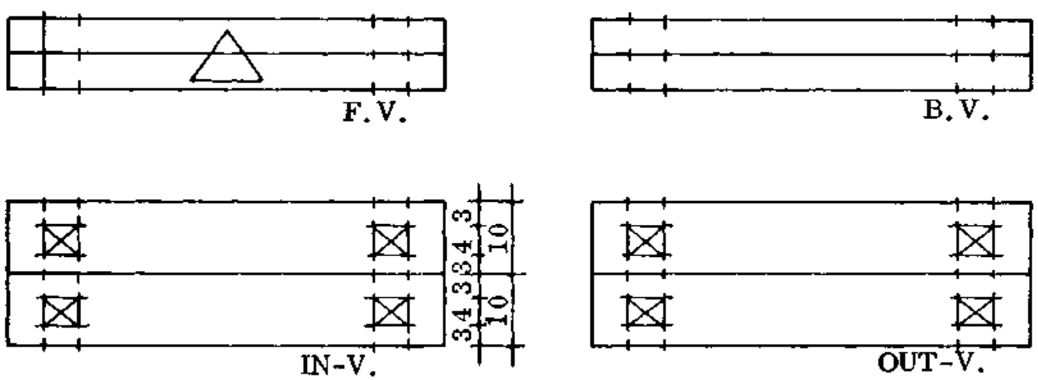

MAKE AN ORTHOGRAPHIC DRAWING FROM A WINDOW FRAME WITH DIFFERENT MEASUREMENTS.

DRAW ALL THE MEMBERS AND MARK THE JOINTS OUT ON THE DRAWING.

N . P . V . C .	
2 1/2 HOURS	41.

WINDOW FRAME SCALE 1 : 10 (cm)

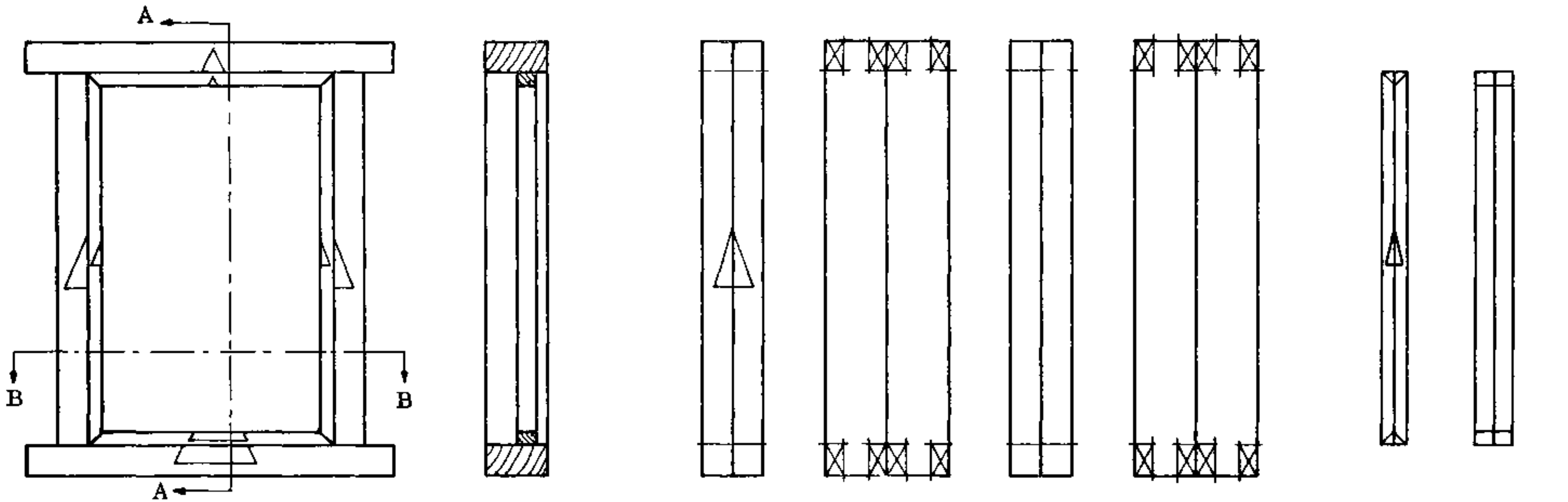

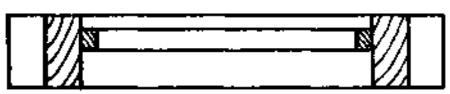

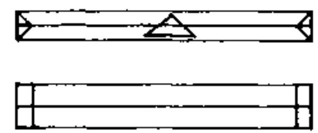

- NAME ALL VIEWS.
- DRAW ALL DIMENSION LINES.
- MARK ALL DIMENSIONS.
- MARK THE POSITIONS OF THE BEADS.

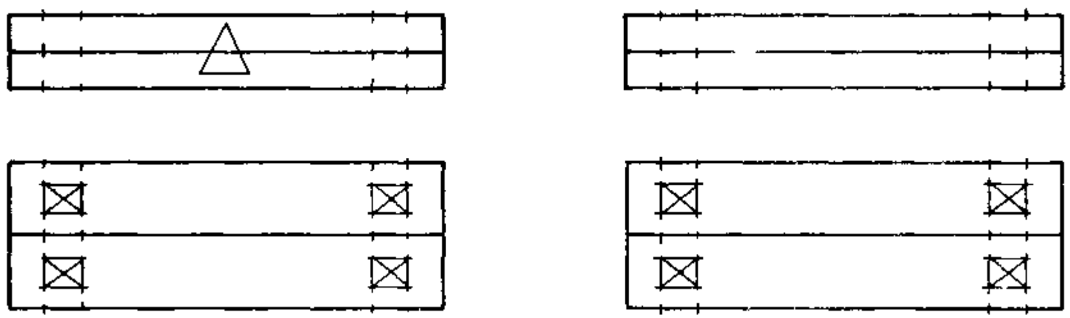

DETAIL

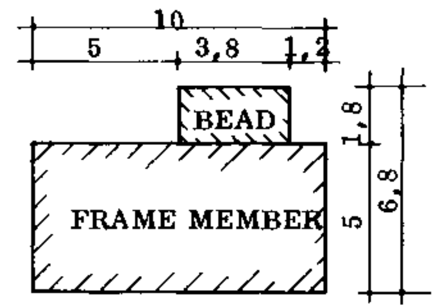

MAKE A DRAWING OF A WINDOW FRAME WITH DIFFERENT DIMENSIONS.

N . P . V . C .	
42.	2 ½ HOURS

DOOR FRAME FOR A SMALL DOOR SCALE 1 : 10 (cm)

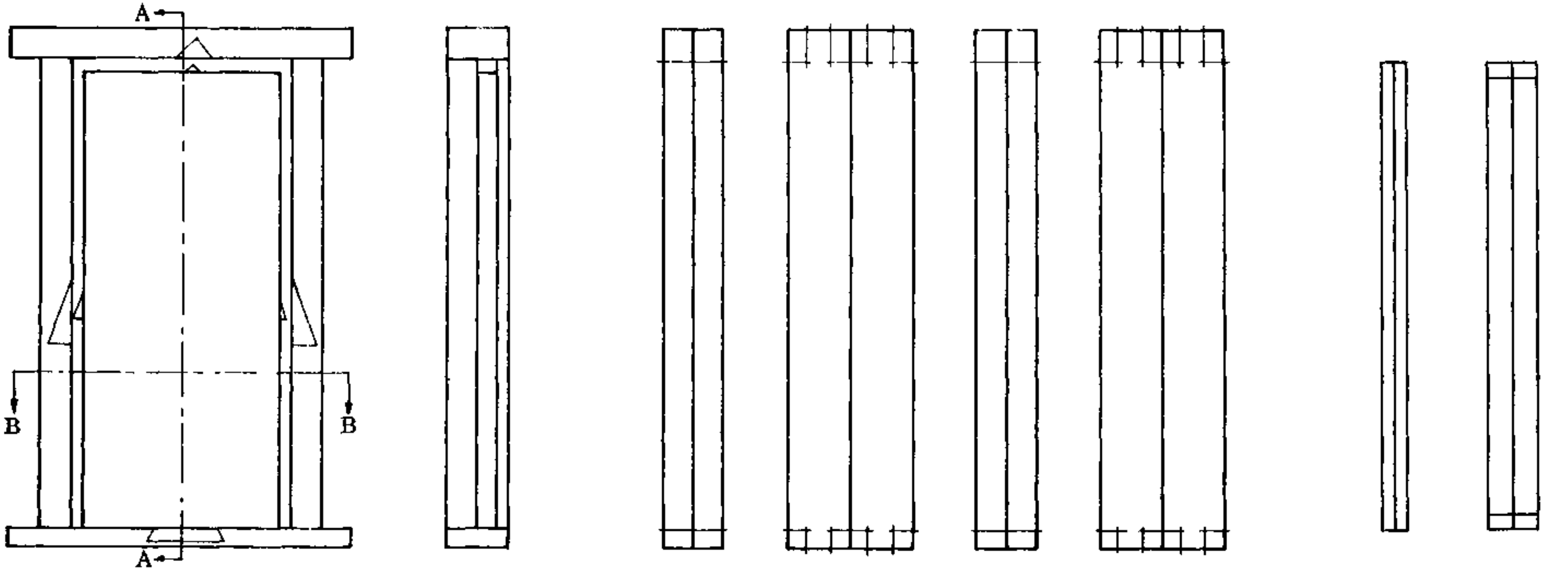

- NAME ALL VIEWS.
- DRAW ALL DIMENSION LINES.
- MARK ALL DIMENSIONS.
- MARK THE POSITIONS OF THE BEADS.
- MARK THE JOINTS.

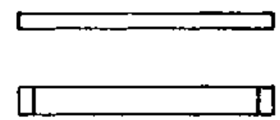

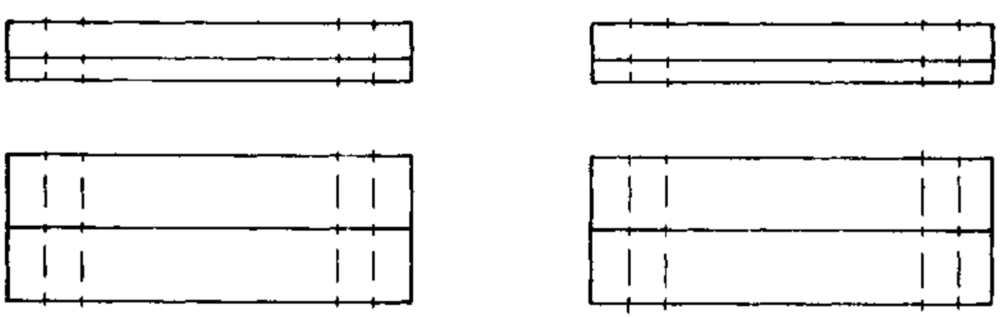

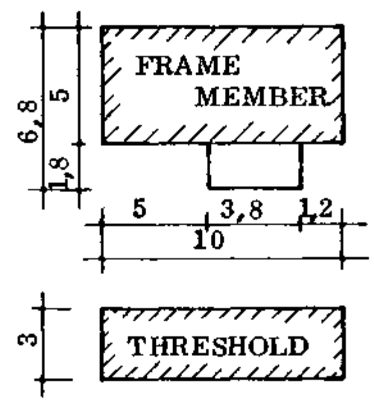

MAKE A DRAWING OF A DOOR FRAME WITH DIFFERENT DIMENSIONS.

N . P . V . C.	
2½ HOURS	43.

WOODEN FRAME SCALE 1 : 10 (cm)

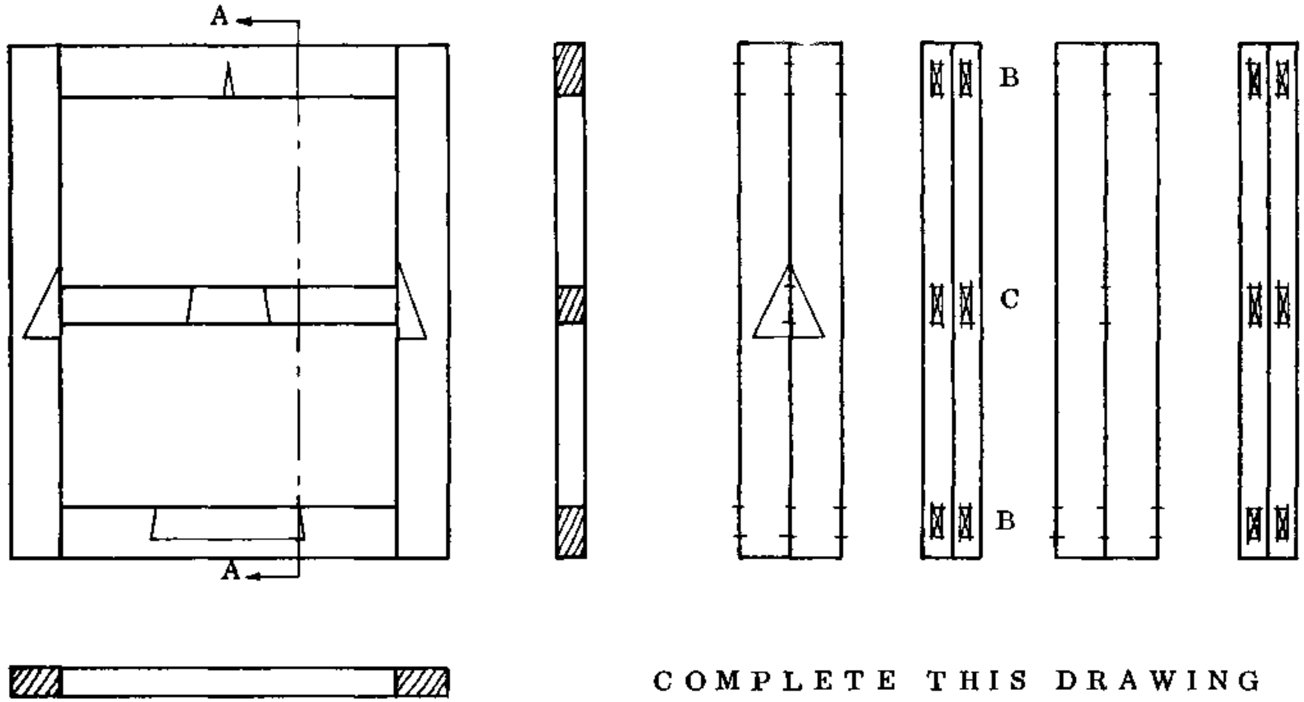

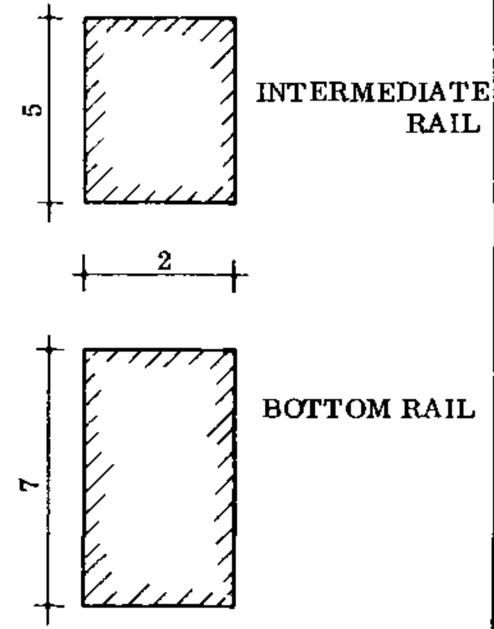

DETAILS

COMPLETE THIS DRAWING

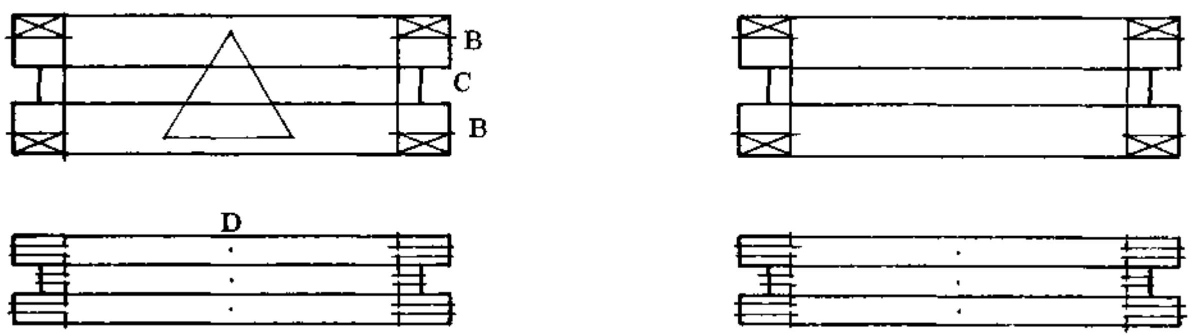

NOTICE:

- THE FACE MARK OVER THREE MEMBERS
- THE INTERMEDIATE RAIL
- WIDTH OF THE MORTICE AND TENON
- THROUGH MORTICE AND TENON
- STOPPED MORTICE AND TENON
- VENTILATION HOLES AT D

MAKE A DRAWING OF A FRAME

- SCALE 1 : 10 (cm)
- USE DIFFERENT DIMENSIONS
- CORNER JOINTS:HAUNCHED MORTICE AND TENON
- OTHER JOINTS:STOPPED MORTICE AND TENON

N . P . V . C .	
44.	2½ HOURS

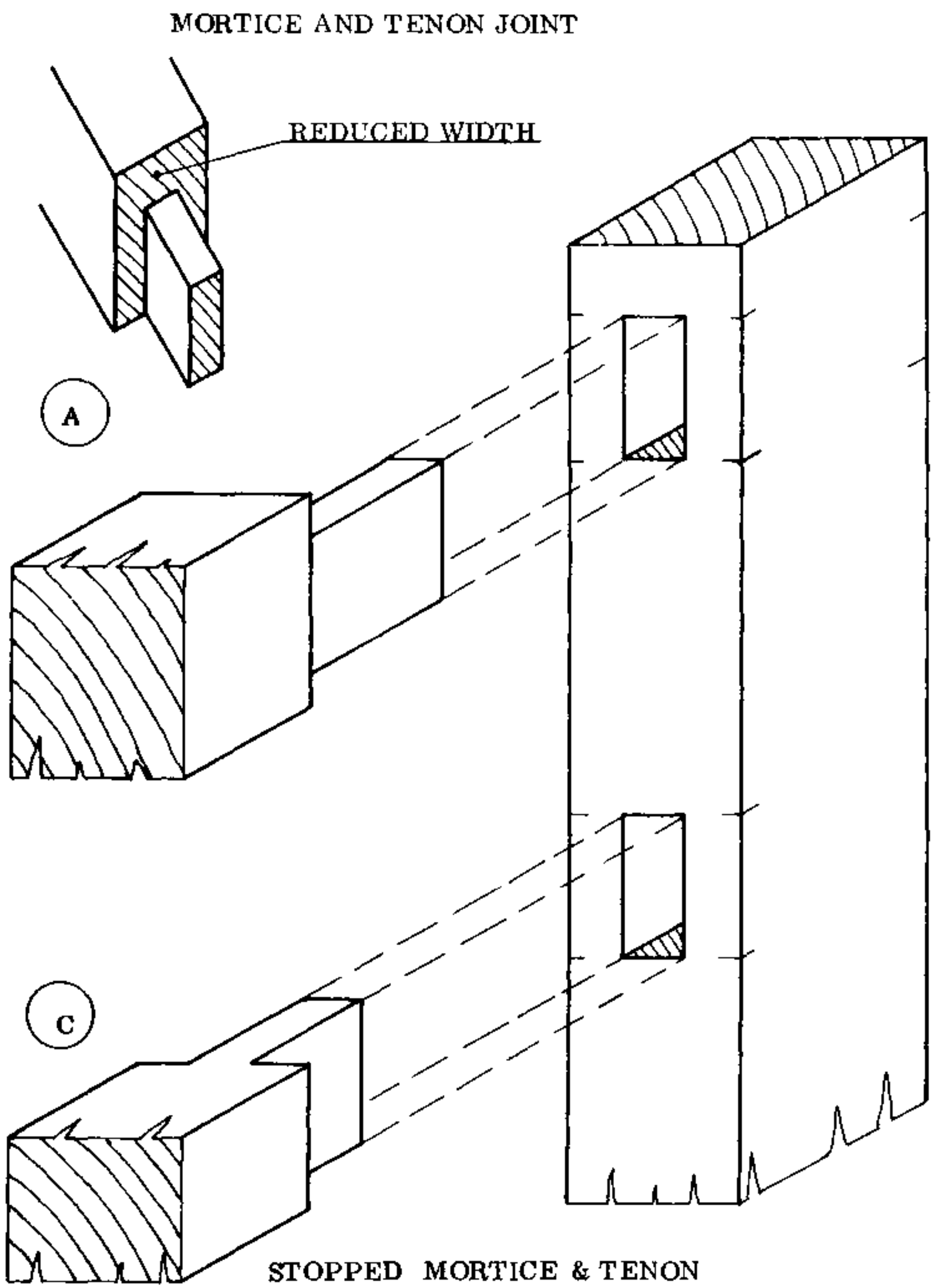

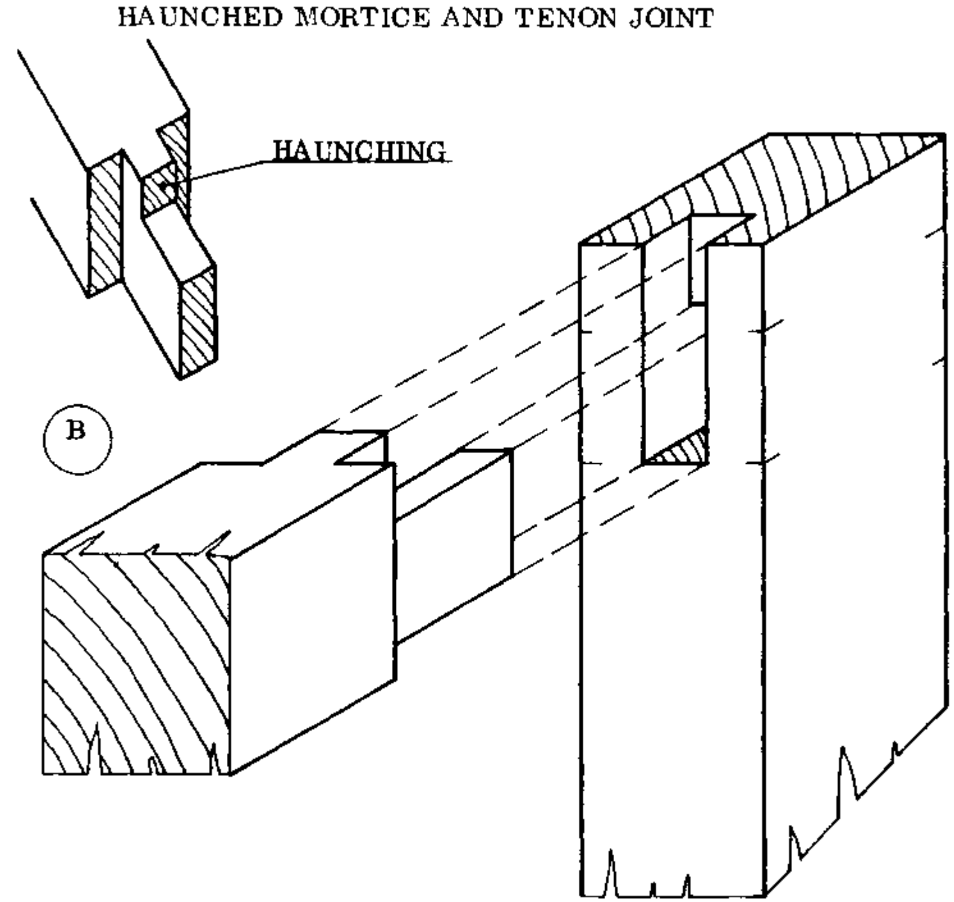

- MAKE AN OBLIQUE DRAWING OF:

A STOPPED HAUNCHED MORTICE AND TENON JOINT.
USE DIFFERENT POSITIONS.

N . P . V . C .	
	45.

WOODEN FRAME WITH SLANTING CILL

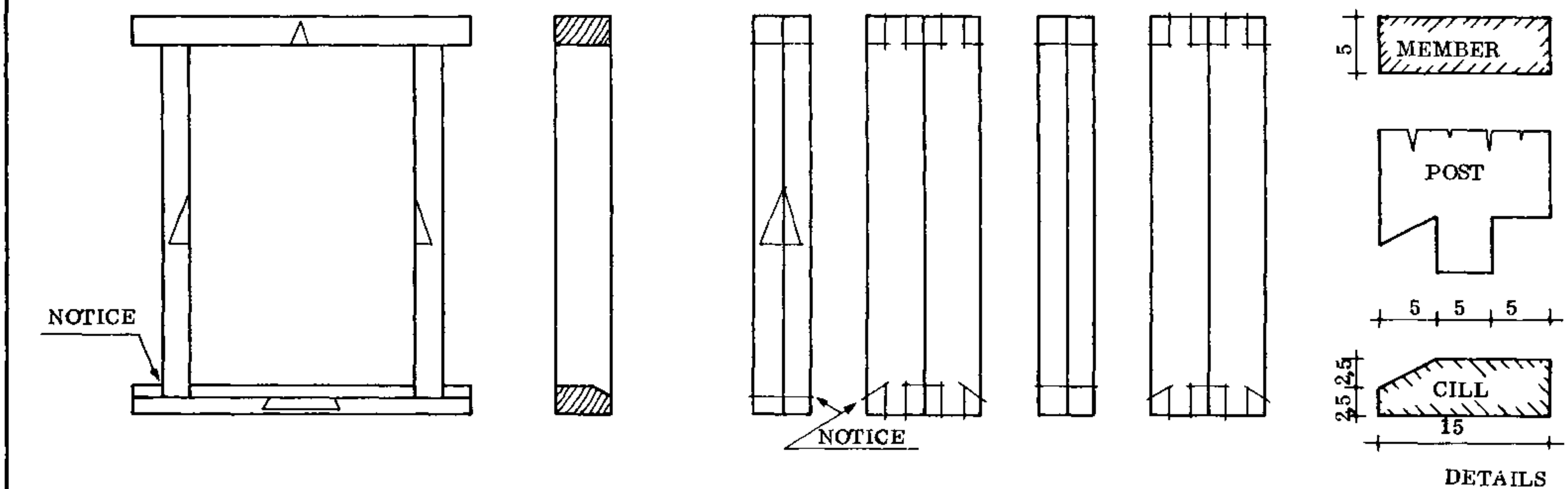

COMPLETE THIS DRAWING

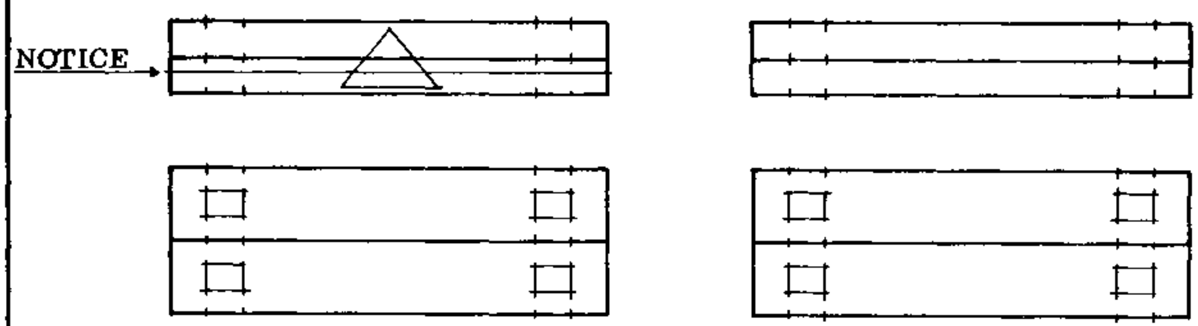

NOTICE

CILL & POST CONSTRUCTION
MARKING OUT OF JOINTS
MARKING OF CILL

MAKE A NEW DRAWING WITH DIFFERENT DIMENSIONS AND CILL SHAPE.

N . P . V . C.	
46.	2½ HOURS

OBLIQUE DRAWING OF "CILL-POST" CONSTRUCTION

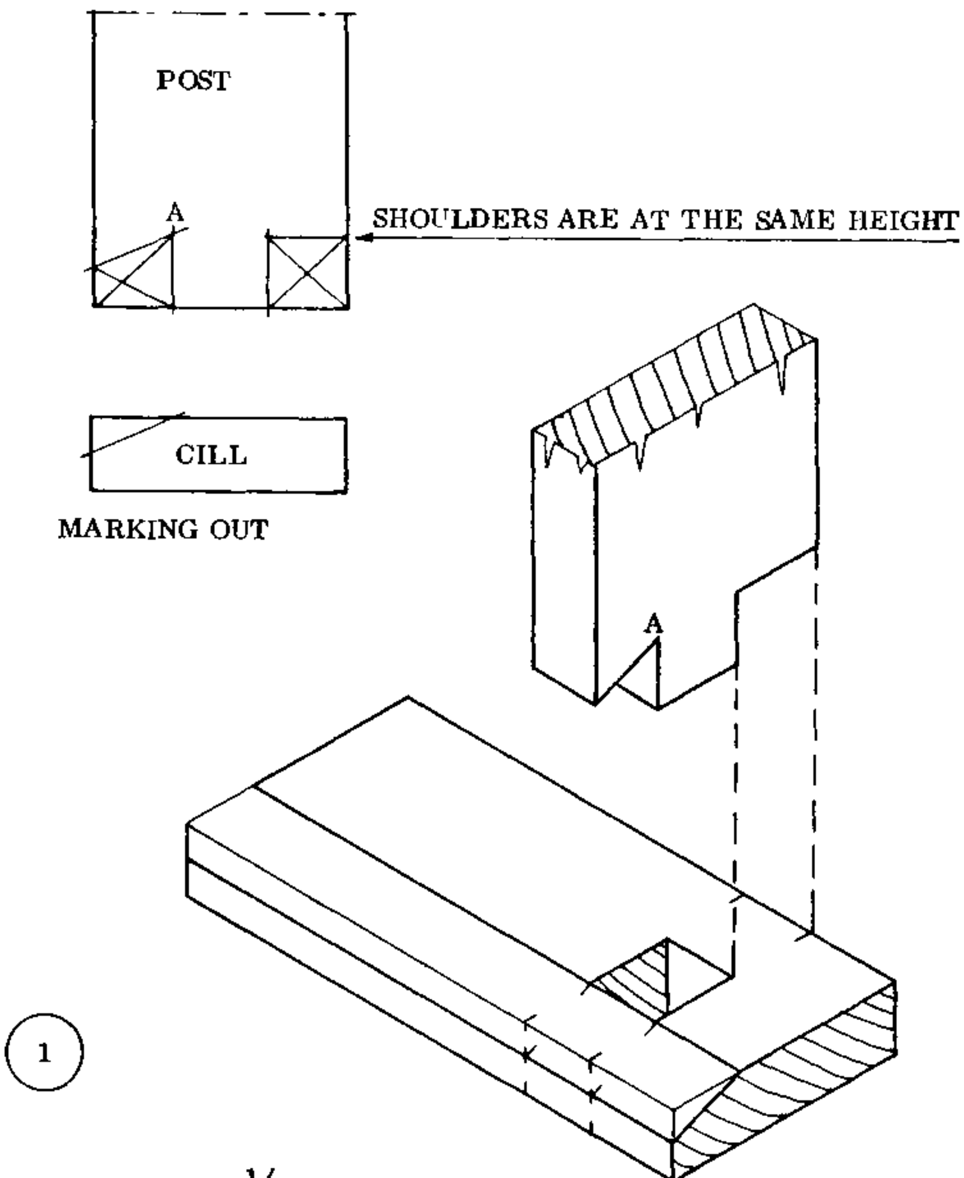

SLANTING 1/3 OF THE WIDTH

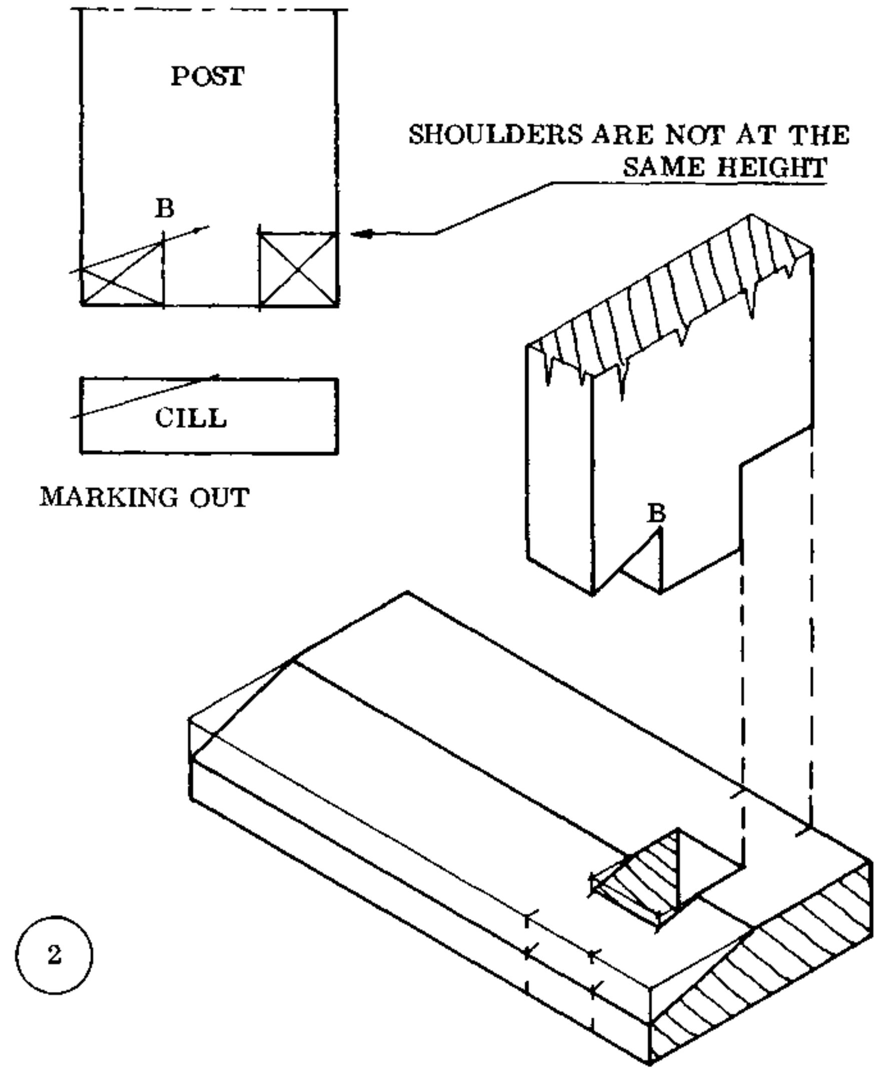

SLANTING MORE THAN 1/3 OF THE WIDTH

N.P.V.C.	
	47.

REMEMBER

NOW THIS BOOK IS REALLY YOURS !
FOR YOU IT OPENS MANY DOORS
TO KNOWLEDGE . ON ITS PAGES WRITE
NOTES TO HELP YOU UNDERSTAND , MAKE LIGHT
SKETCHES AND DRAWINGS ALL YOUR OWN.

THOUGHTS OF YOURS , LIKE SEED ARE SOWN
FRUITS COME LATER UNDER SUN AND RAIN
IN THE FORM OF BUILDINGS WITH DOORS , ROOF AND WINDOW-PANE.

KEEP YOUR WORK BOLD , CLEAR AND CLEAN
THIS BOOK WILL BE YOUR PRIDE , AND GUIDE TO ALL
YOU'VE LEARNT AND SEEN .

FORM 2: GENERAL BUILDING INFORMATION

The important rules for a Rural Builder to remember in general are:

- PLAN CAREFULLY EVERYTHING THAT YOU MAKE OR BUILD.
- DRAW ALL IDEAS OUT ON PAPER FOR THE BENEFIT OF THOSE WHO WILL HAVE A PART IN THE PROJECT BEFORE, DURING AND AFTER CONSTRUCTION.
- ALWAYS TAKE INTO ACCOUNT MATERIALS WHICH ARE LOCALLY AVAILABLE, AND WHEN POSSIBLE USE THESE RATHER THAN EXPENSIVE IMPORTED MATERIALS.
- TAKE INTO ACCOUNT THE SIZES OF READY-MADE MATERIALS WHEN YOU ARE PLANNING THE BUILDING.
- BE AWARE OF THE REQUIREMENTS OF THE ENVIRONMENT AND THE LOCAL CUSTOMS.

Drawings should be precise and clear and should take account of the sizes of all the ready-made materials, so as to avoid unnecessary waste. It is therefore important to be informed about all the materials which are available for Rural Building, and their sizes. These can be found in the Reference Book, Materials and Products sections.

Remember that a building is an investment and the construction should be long-lasting. Proper construction, using good materials, will avoid unnecessary expense, inefficiency, and dissatisfaction.

As a rule, mistakes in design or construction are costly, obvious, and permanent.

BUILDING KEY

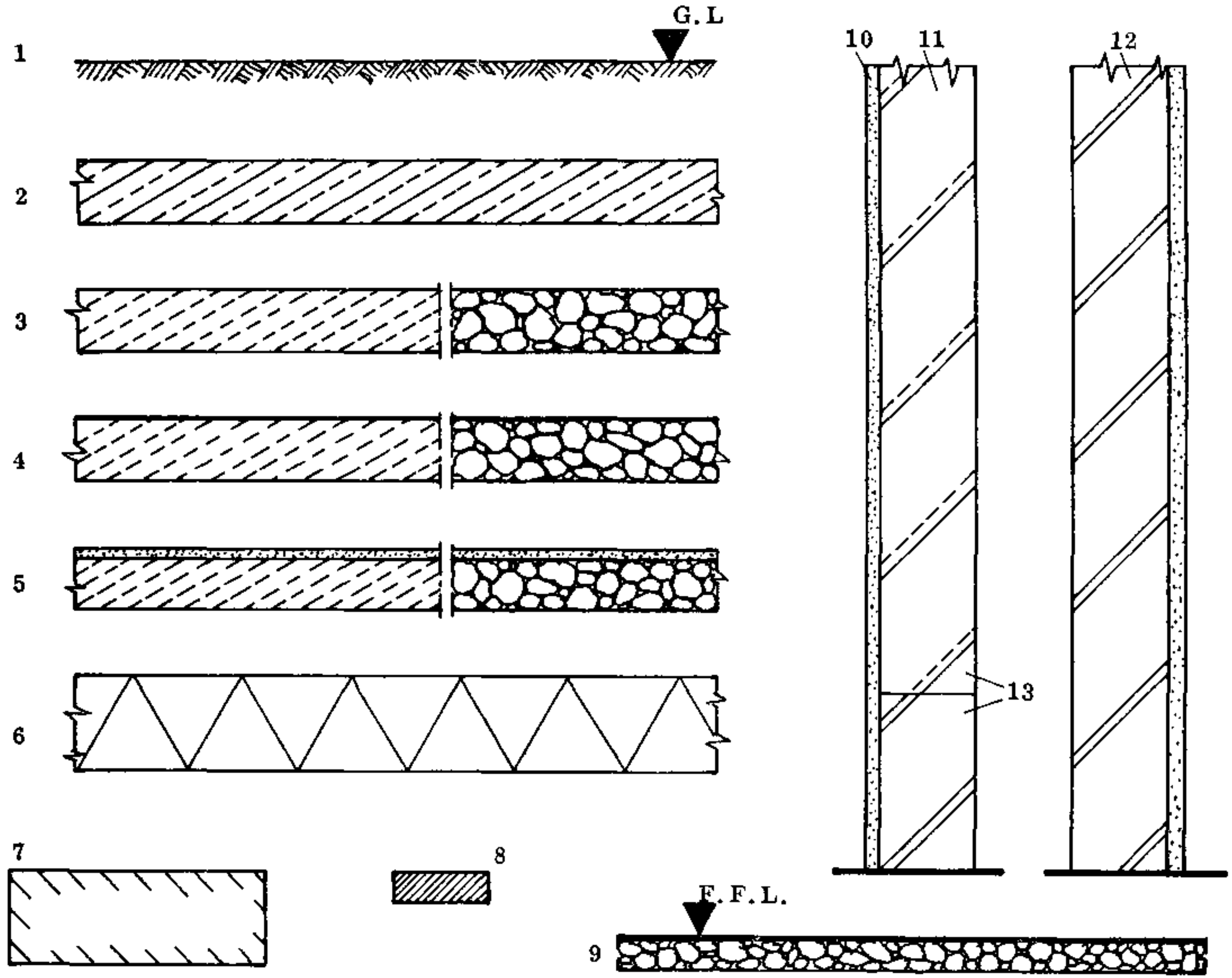

BUILDING KEY

1 = GROUND LEVEL

2 = REINFORCED CONCRETE

3 = CONCRETE

4 = ONE COURSE WORK

5 = TWO COURSE WORK

6 = HARD CORE FILLING

7 = WOOD (large)

8 = WOOD (small)

9 = FINISHED FLOOR LEVEL

10 = PLASTER

11 = LANDCRETE WALL

12 = SANDCRETE WALL

13 = SANDCRETE TO LAND-CRETE

N.P.V.C.	
49.	

BUILDING KEY

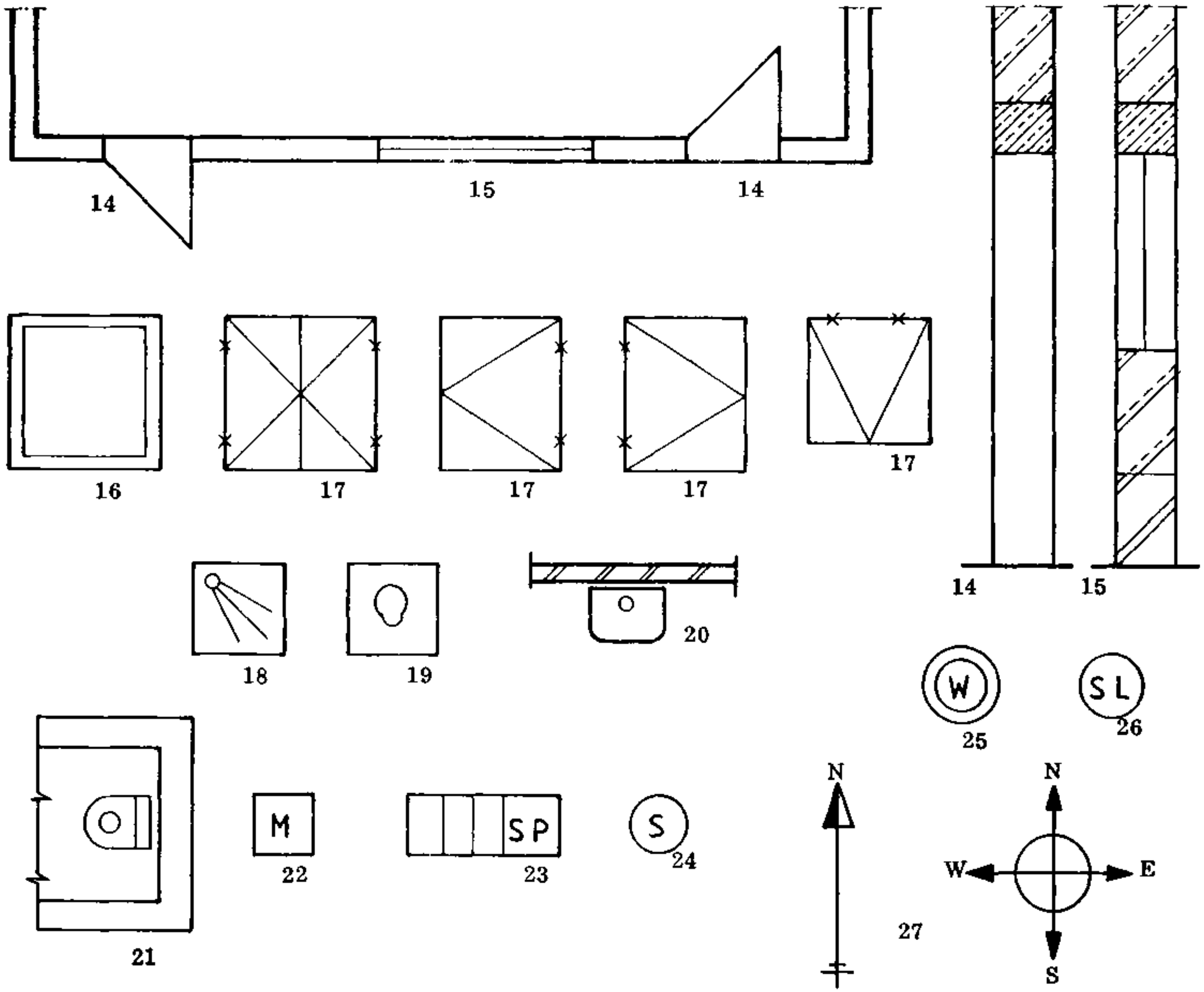

14 - DOORS(without threshold)

15 - WINDOW (plan)

16 - WINDOW (front view)

17 - HINGE POSITIONS

18 - SHOWER

19 - PIT LATRINE

20 - SINK

21 - FLUSH TOILET

22 - MANHOLE (sewage)

23 - SEPTIC TANK

24 - SOAKAWAY (waste water)

25 - WELL

26 - SILO

27 - DIRECTIONS

N . P . V . C .

SCALE

When you draw a plan of a building on paper you will find that you have to use a scale, to make the plan small enough to fit on the paper. Scales were explained earlier, but here are some examples to help you remember how to use them.

- EXAMPLES: A scale of 1:50 (cm) tells you that 1 cm on the drawing represents 50 cm in real life. In other words all the dimensions on the drawing are 1/50th of their real size and all the dimensions are in centimetres.

  A scale of 1: 500 (cm) tells you that all the dimensions on the drawing are 1/500th of their real size and that all the dimensions are in centimetres.

  Both of these scales make the drawing smaller than the actual building size. These types of scales are called "reduced scales".

  The man you see on the next page is making a scale drawing of an electricity pole. The pole is 800 cm high and the man is using a scale of 1 : 100 (cm) which means that his drawing will be 8 cm high. The 8 cm on the drawing represents 800 cm in real life.

  If the crossbar on the pole is 150 cm long, how long will the man draw it on his paper?

All building drawings are made in reduced scale. Here are some examples of drawings used in building, and the scales commonly used with them:

- LOCATION PLAN	1 : 500
- DESIGN DRAWING	1 : 100
- FINAL DRAWING	1 : 50
- DETAIL DRAWING	1 : 20; 1 : 10, or 1 : 5

Always remember to include the UNITS of the scale you have used; these are usually "cm" or "mm".

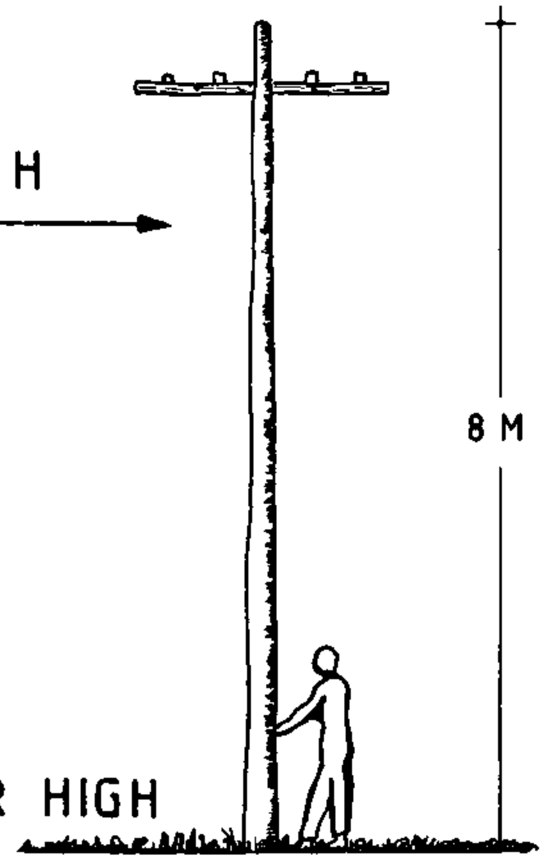

IF THIS POLE IS 8 METER HIGH

AND

IS DRAWN

8 CENTIMETER HIGH

THEN THE POLE IS DRAWN

SCALE 1:100 (cm)

WORKING DRAWINGS

Three different types of drawings are needed to show the builder exactly how the building should look, on the inside and the outside. These include the elevations and sections, as well as the plans. Here we describe the different types of plans which have to be made: the foundation plan, floor plan, and roof plan.

- FOUNDATION PLAN: A foundation plan, along with its sections, shows the builder how deep the foundations should be laid and gives all the dimensions for the foundation and the footings. Sometimes the corners of the rising walls are indicated on the footings.
- FLOOR PLAN: This plan should show the builder the size of the building and the verandahs, the thickness of the walls, and where to place the doors and windows. It also shows which way the doors are meant to open.
- ROOF PLAN: Roof plans are made to show the builder what shape the roof should be and how it is to be built. The roof plan should contain such information as the angle of the roof, the shape, and the materials to be used.

The drawing here illustrates the types of plans and what it is they show to the builder.

Elevations and cross sections are of course essential parts of the working drawings. These are examined in detail after some further examples of plans in the next pages.

PLANS

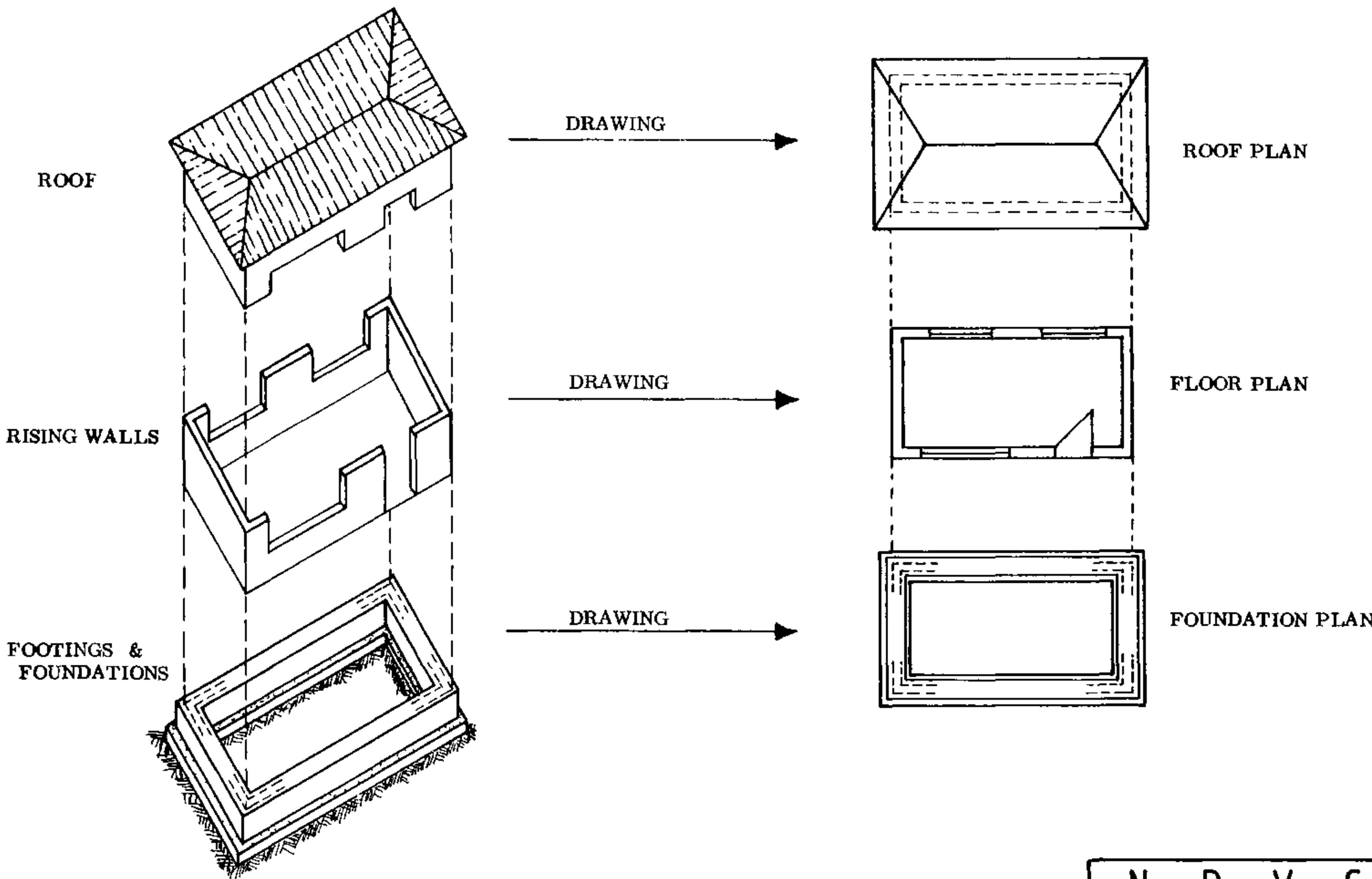

ROOF
RISING WALLS
FOOTINGS &
FOUNDATIONS
DRAWING
DRAWING
DRAWING
ROOF PLAN
FLOOR PLAN
FOUNDATION PLAN

N. P. V. C.

FLOOR PLANS

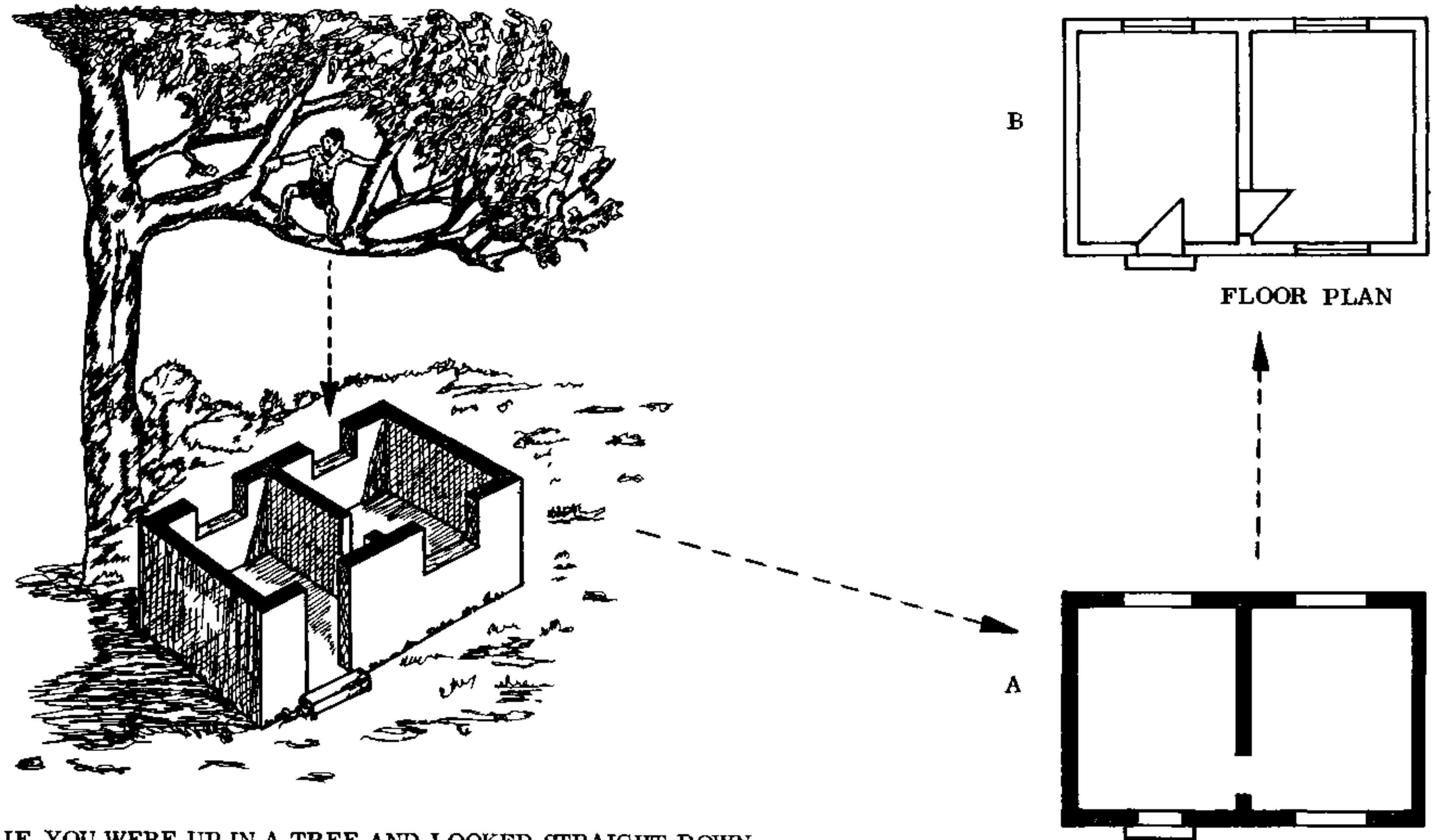

IF YOU WERE UP IN A TREE AND LOOKED STRAIGHT DOWN
AT THIS HALF-BUILT HOUSE IT WOULD LOOK LIKE "A".
YOU SHOULD DRAW IT LIKE "B".

FLOOR PLAN

DIMENSION LINE A = OPENINGS
,, ,, B = WALLS
,, ,, C = TOTAL LENGTH

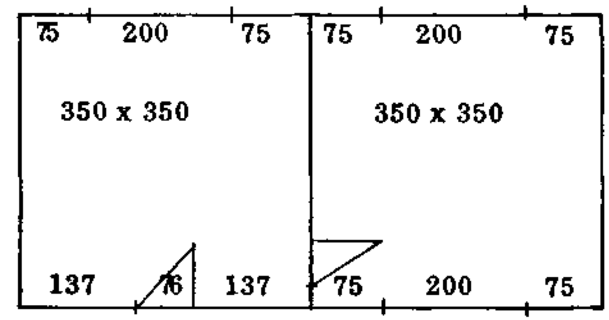

DIMENSIONS IN CM

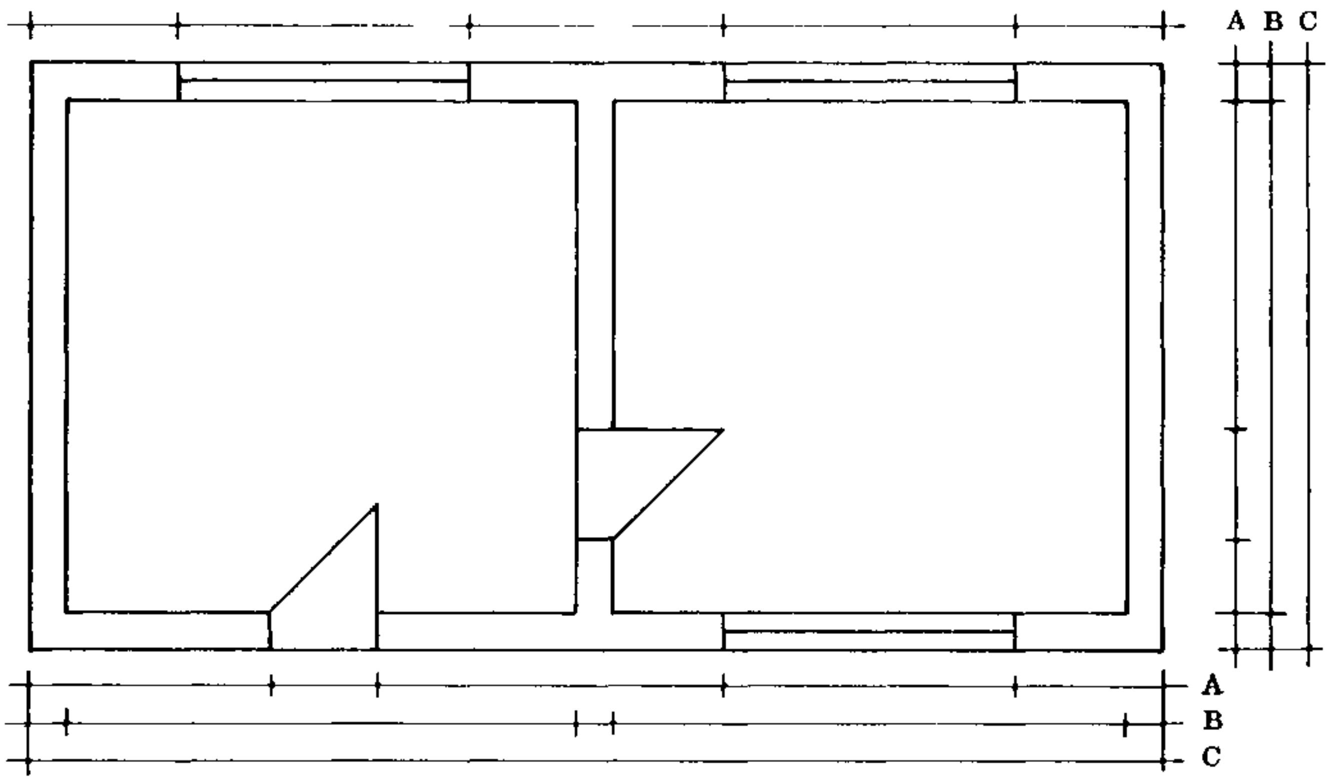

TECHNICAL DATA
WALL THICKNESS = 15cm
WIDTH OF FOOTINGS = 30cm
WIDTH OF FOUNDATION = 45cm

EXERCISE

MARK IN ALL DIMENSIONS.

N. P. V. C.

56.

FLOOR PLAN

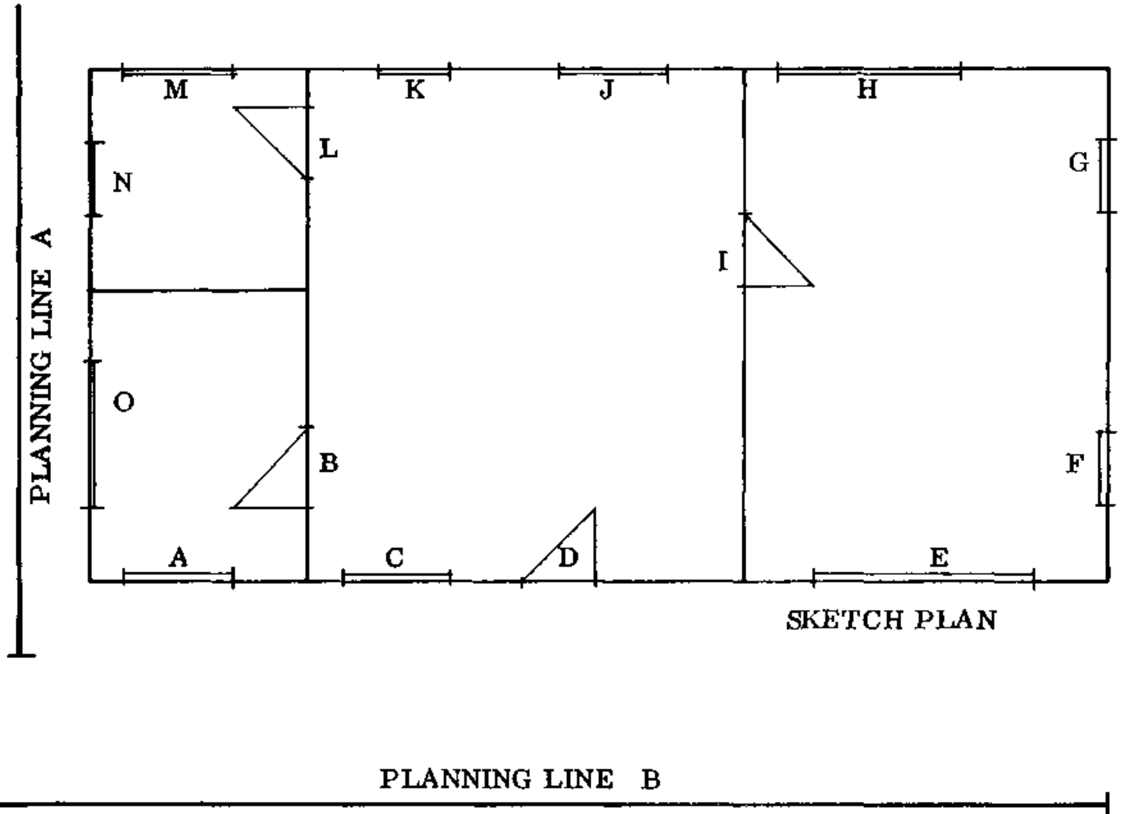

WINDOW AND DOOR HEIGHTS

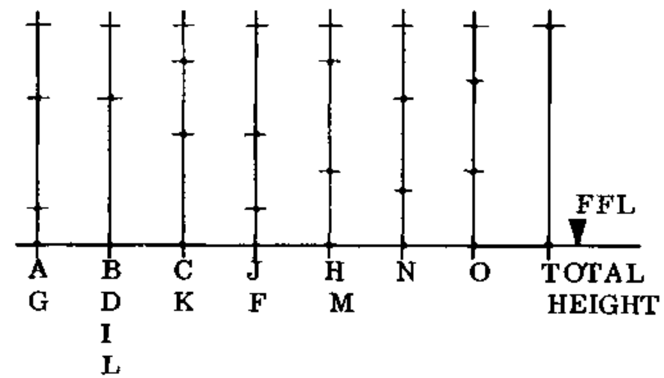

EXERCISE

- MARK IN ALL DIMENSIONS ON PLAN.
- MARK IN ALL DIMENSIONS FOR DOOR AND WINDOW HEIGHTS.
- MARK IN PLANNING LINES A & B.
- FIND THE TOTAL LENGTH AND WIDTH (SCALE = 1 : 100 cm).

MEASUREMENTS OF AREAS ARE ALWAYS INSIDE MEASUREMENTS!

N . P . V . C.	
57.	

SKETCHES FOR FLOOR PLANS

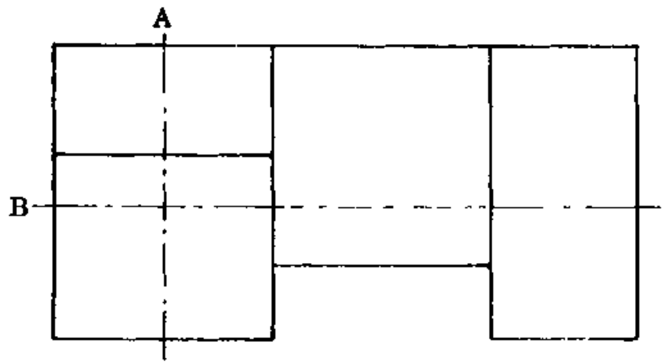

SKETCH 1

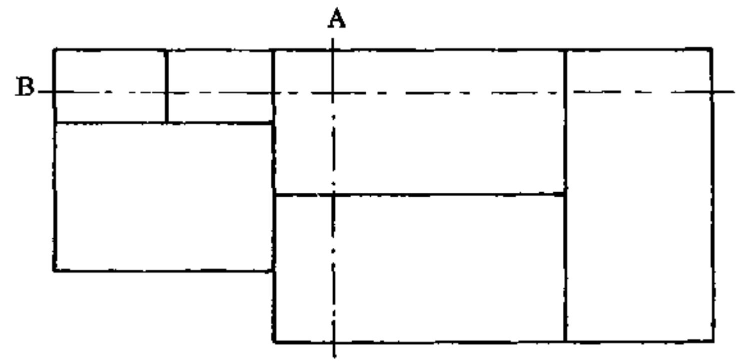

SKETCH 2

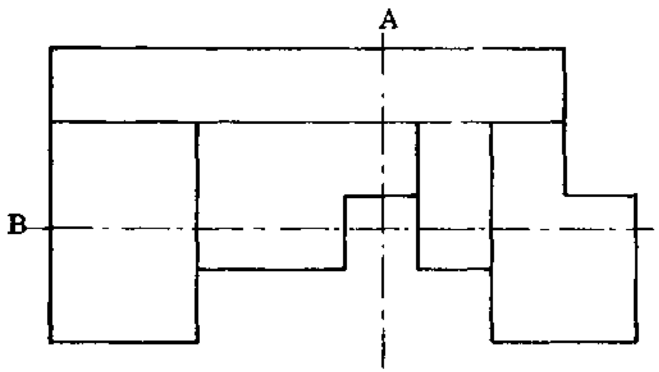

SKETCH 3

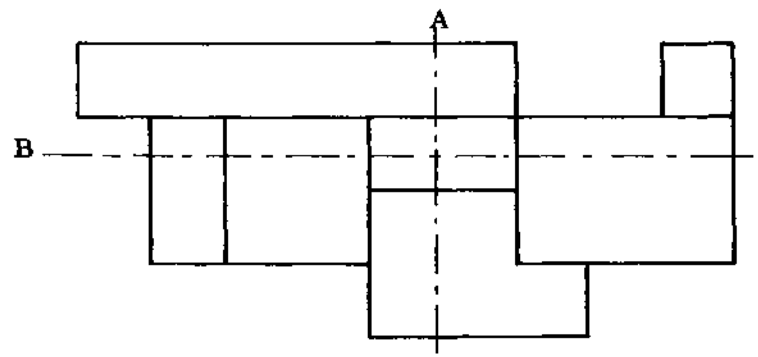

SKETCH 4

EXERCISE
- DRAW THESE FOUR BUILDING PLANS: SCALE 1 : 50 (cm) INCLUDE DOORS AND WINDOWS IN THE POSITIONS OF YOUR OWN CHOICE.

TECHNICAL DATA

THE RISING WALLS ARE 15 CM THICK AND 200 CM HIGH.

NOTE: PLANNING LINES (LINES A & B) ARE POSITIONED WHERE THEY WILL SHOW THE MOST DETAIL.

N . P . V . C .	
1 ½ HOURS	58.

ELEVATIONS

A special type of drawing is used to show what a building will look like from the outside. These drawings are called "elevations" and they show what you would see if you looked straight on at the side of the house. Of course a house has more than one side, and so there are always a number of elevations. There are as many elevations as there are sides of the house. Houses usually have four sides and so there are usually four elevations.

It is not always necessary to draw all the possible elevations of a building, especially if some of the sides look very similar to each other.

The drawing here shows the front elevation of a small house. You should notice that the sides of the house are not drawn. This is because if you stand directly in front of the house you cannot see the sides. The front elevation shows the sizes and positions of the doors and windows as well as the height and length of the house itself.

The building shown on the next page faces south. The front elevation is therefore called the "south elevation". The other three elevations are the east elevation, the north elevation, and the west elevation.

In general only main features are shown on the elevations. Small details of the doors, windows, etc. are given in the detail drawings.

ELEVATIONS

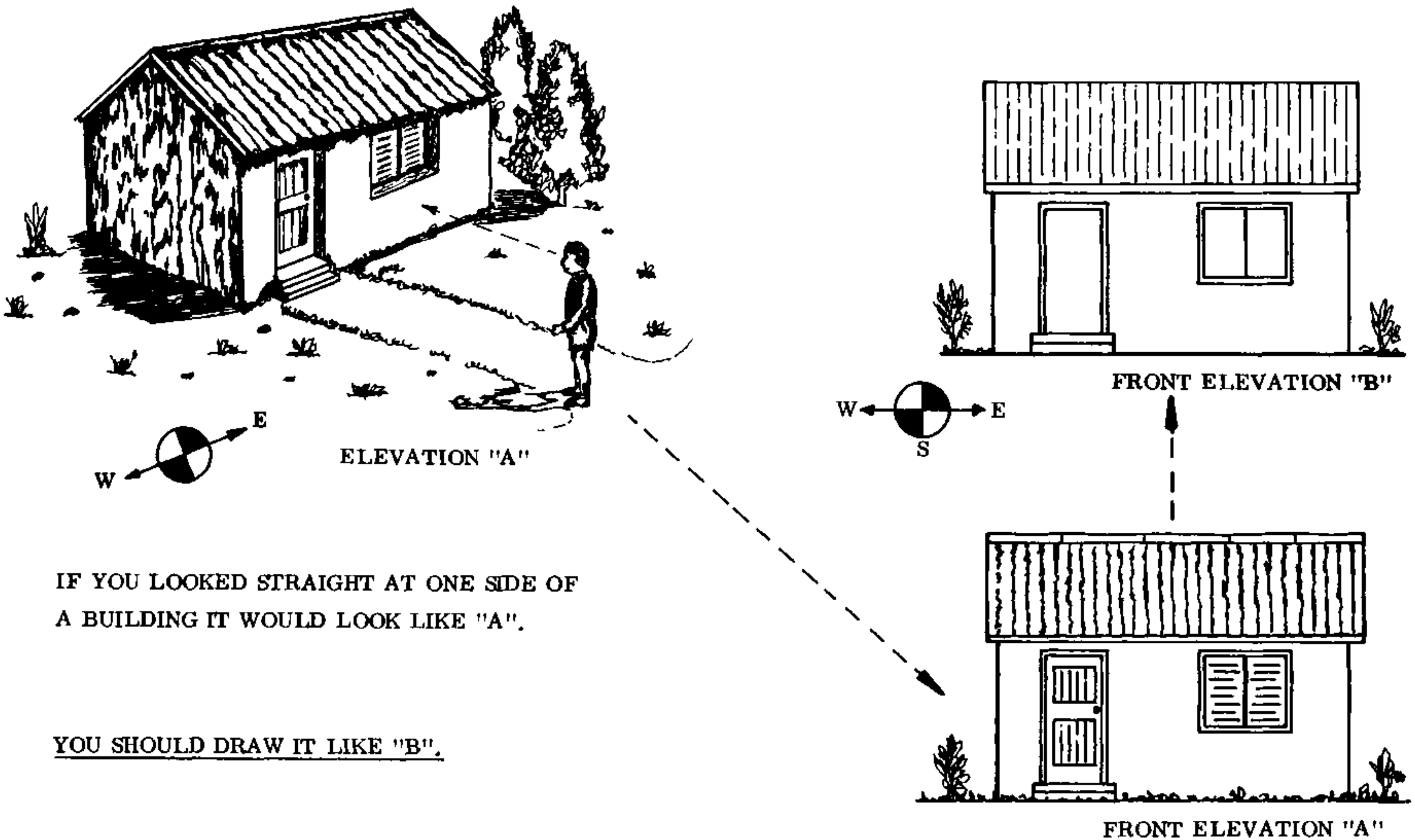

IF YOU LOOKED STRAIGHT AT ONE SIDE OF A BUILDING IT WOULD LOOK LIKE "A".

YOU SHOULD DRAW IT LIKE "B".

N . P . V . C .	
	60.

SECTIONS

Suppose you were able to cut right through a building and then take away one part. What you would see would look something like the diagram on the next page (1). If you now look at the building straight on, you will see a "cross section" of the building (2). The cross section shows the insides of the roof and the room as well as the footings and foundations.

Sections are useful because they give a lot of information about the building which is not found in the elevations and the plans. For example, on a section you can see the height of a room inside the building, the thickness of the ceiling, and the floor and roof construction. You can also see the thickness and width of the foundation, which is not given in the plans and elevations.

- CHOOSING SECTIONS: You will usually find it necessary to take at least two sections through the building. You can take any section through any part of the building, but of course the best sections are the ones which are the hardest to draw! When you take a section through a building, you have to mark on the plan exactly where you have "cut" and the direction from which you look at the section.

  On the right page you can see the conventional way of doing this. The place where the building is cut is marked by a broken line which has arrows at its ends to show which way the section faces. All sections should be marked on the plan, and you should label each end of the line with a letter. On the plan here, the section has the letter "A" at each end. When this cross section is drawn, it is labelled as "cross section A-A". The next section would be "cross section B-B" etc.

CROSS SECTIONS

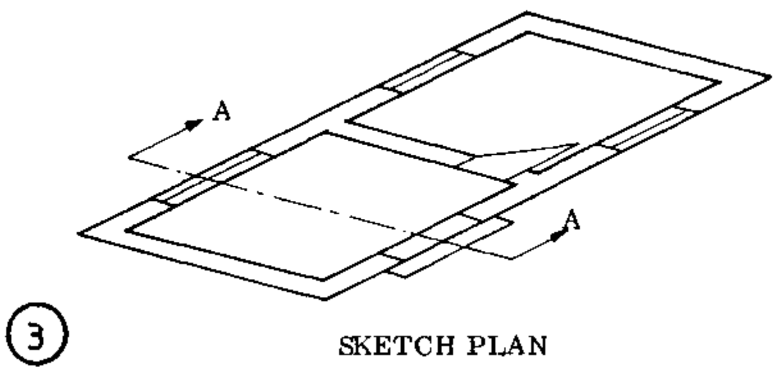

SKETCH PLAN

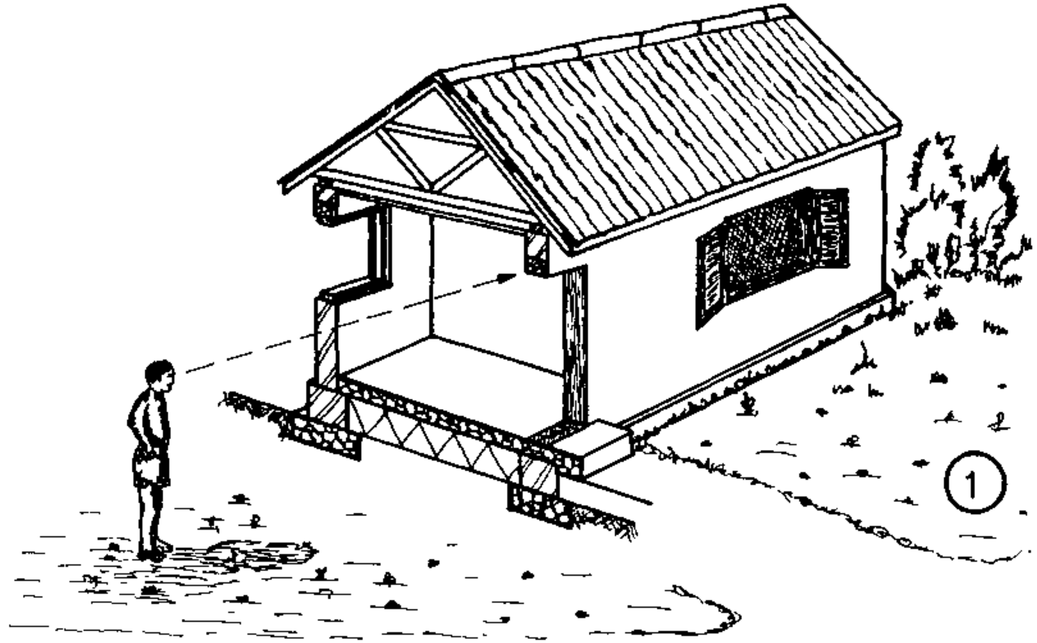

SECTION THROUGH BUILDING

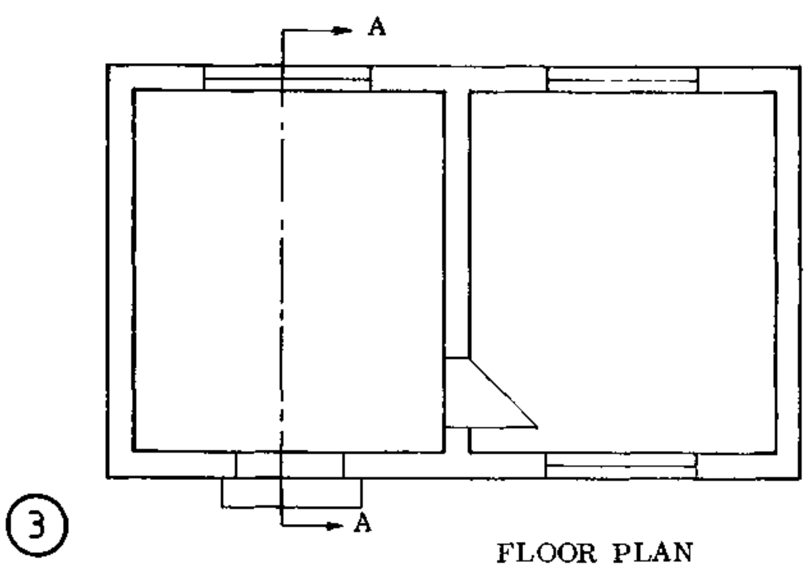

FLOOR PLAN

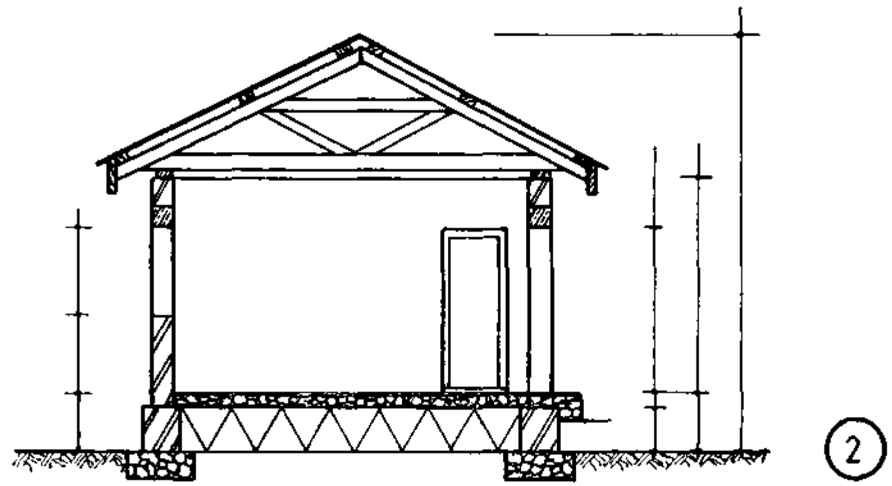

CROSS SECTION A-A

N . P . V . C .	
	62.

PLANS - ELEVATIONS - CROSS SECTIONS

IMPORTANT

- INDICATE ALL DIMENSIONS AT LEAST ONCE.
- MAKE CROSS SECTIONS OF THE MOST DIFFICULT PARTS OF THE BUILDING.
- ALL ELEVATIONS SHOULD BE IN LINE WITH EACH OTHER.
- IF THERE IS NOT ENOUGH SPACE MARK DIMENSIONS LIKE AT "D"

NOTICE

- THE FLOOR GOES THROUGH AT "A".
- THE FLOOR IS STOPPED AT "B".
- FLOOR THICKNESS AT "C"

EXERCISE

MAKE A SIMILIAR DRAWING WITH DIFFERENT DIMENSIONS AND DIFFERENT DESIGN.

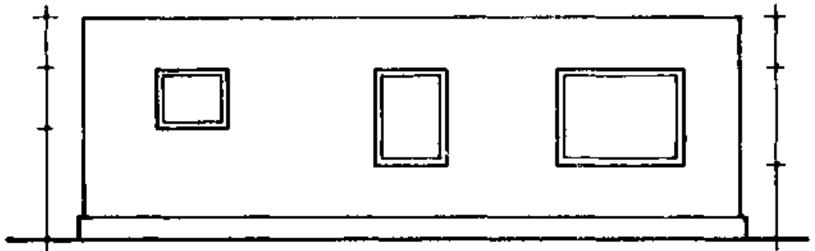

BACK VIEW

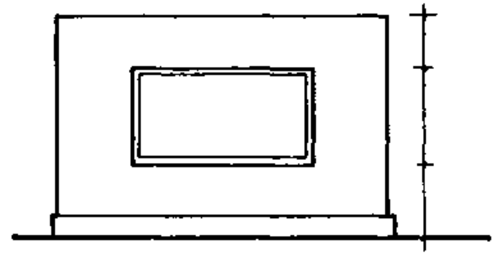

RIGHT SIDE VIEW

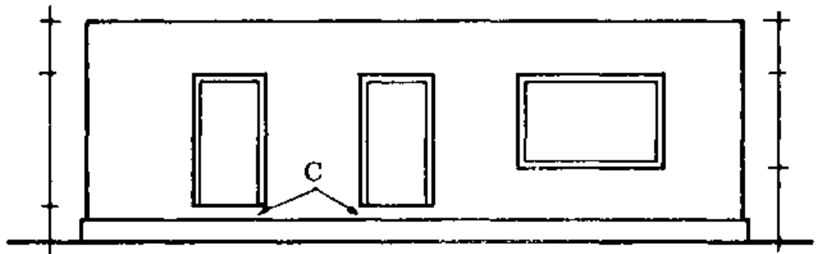

FRONT VIEW

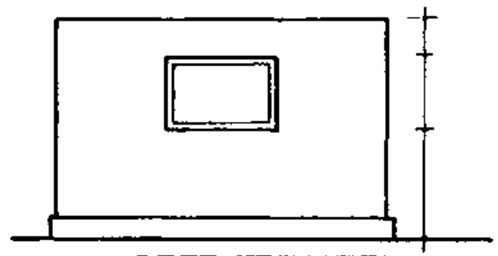

LEFT SIDE VIEW

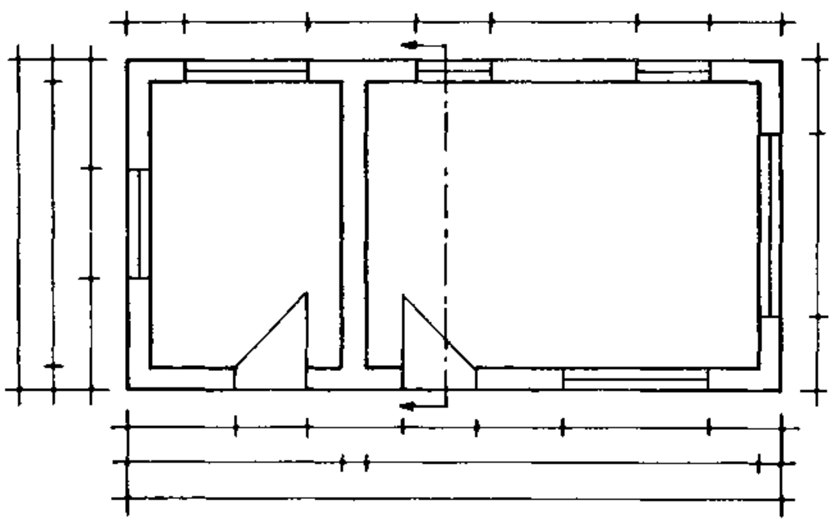

PLAN

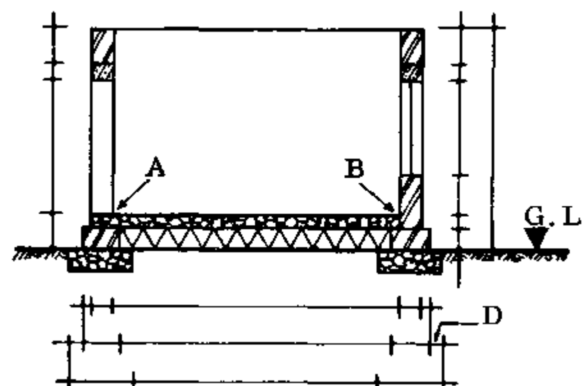

CROSS SECTION A-A

N . P . V . C .	
63.	4 HOURS

FOUNDATION PLAN

MAKE THE PLANNING LINES FIRST!

A = TOTAL WIDTH
B = FOUNDATION WIDTH
C = FOOTING WIDTH
D = RISING WALLS

E = FOUNDATION THICKNESS
F = FOOTING HEIGHT
G = TOTAL HEIGHT

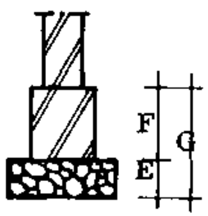

CROSS SECTION K-K

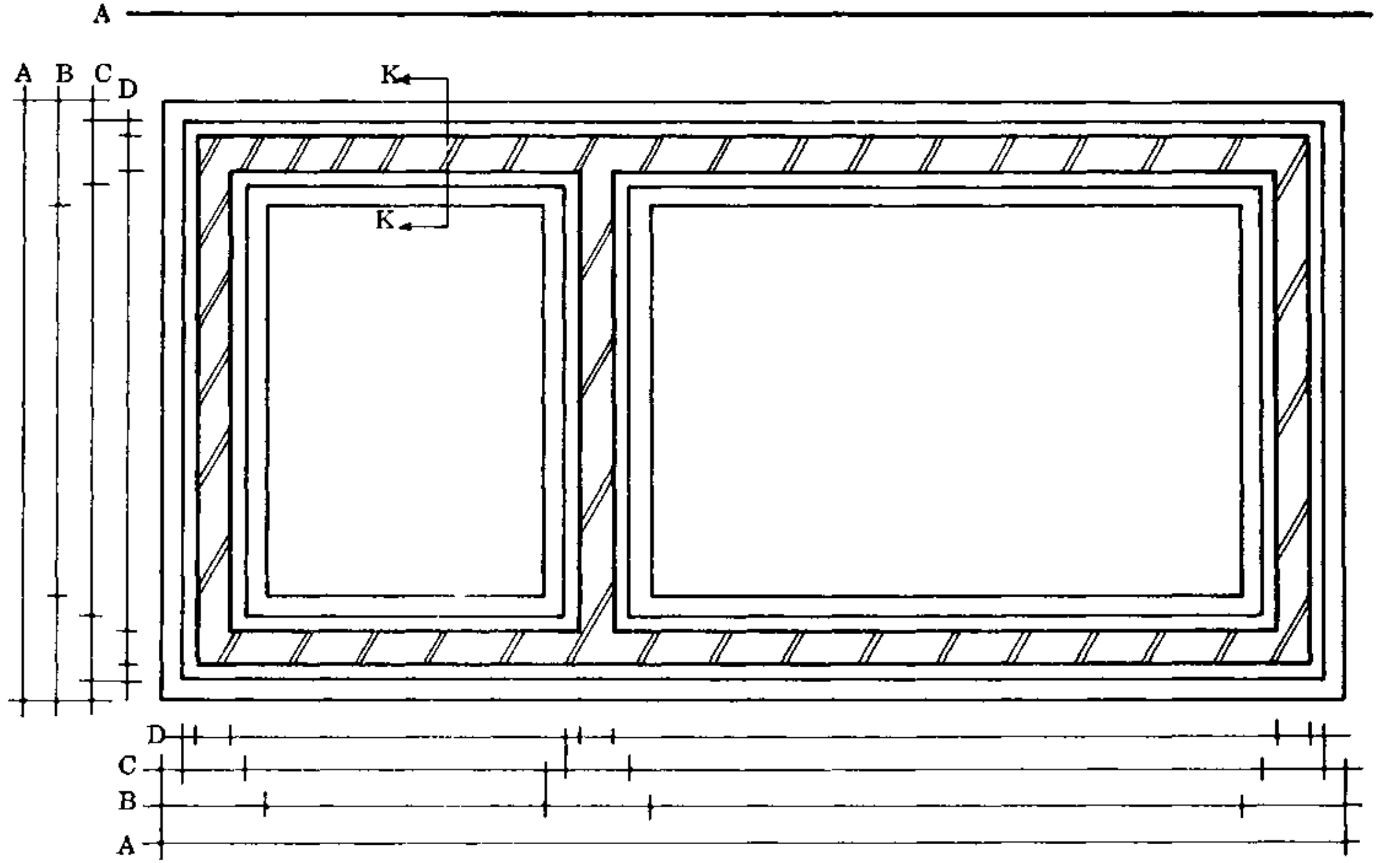

FOUNDATION PLAN

EXERCISE DRAW FOUNDATION PLANS FOR THE FOUR FLOOR PLANS ON PAGE 58.
USE A SCALE OF 1: 20 (cm).

N . P . V . C .	
1 HOUR	64.

BUILDING WITH VERANDAH

PLANS - ELEVATIONS - CROSS SECTION

TECHNICAL DATA

FOOTING FOR THE VERANDAH IS SMALLER.

FOUNDATION FOR THE VERANDAH IS SMALLER.

VERANDAH FLOOR IS AT THE SAME LEVEL AS THE INSIDE FLOOR (X).

VERANDAH FLOOR IS PROJECTING ON THE PLAN (D).

NOTICE THE DIFFERENCE IN THE VERANDAH FLOOR AND THE FOOTINGS HEIGHT (K).

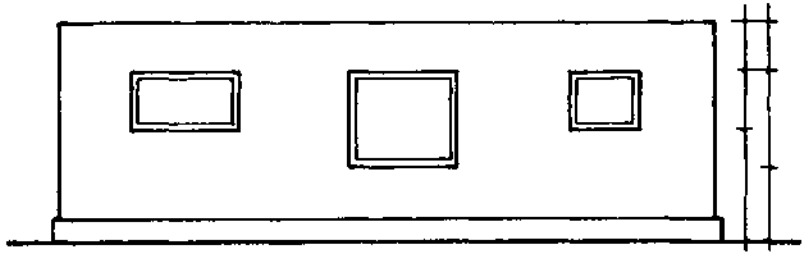

BACK VIEW

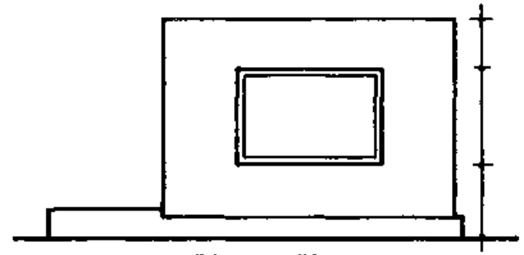

RIGHT SIDE VIEW

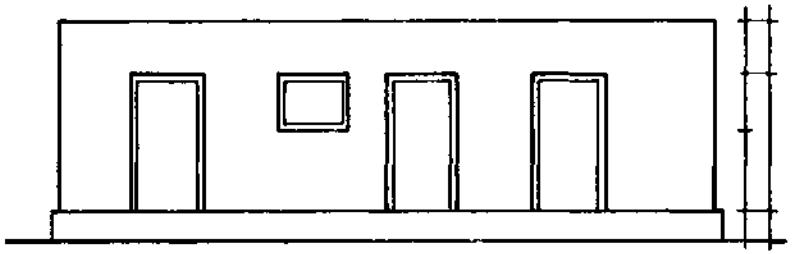

FRONT VIEW

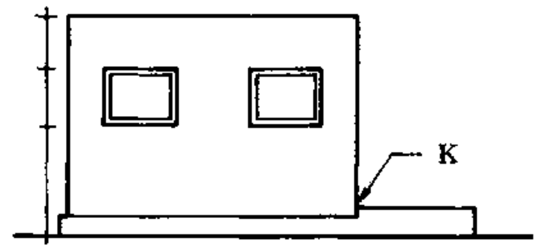

LEFT SIDE VIEW

EXERCISE

MAKE A DRAWING OF A BUILDING WITH VERANDAH.

USE SCALE 1 : 50 (cm)

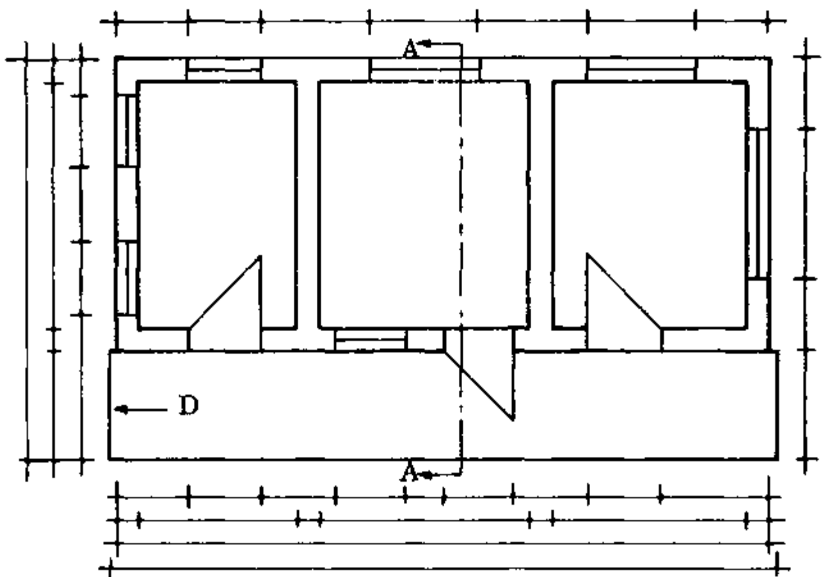

PLAN

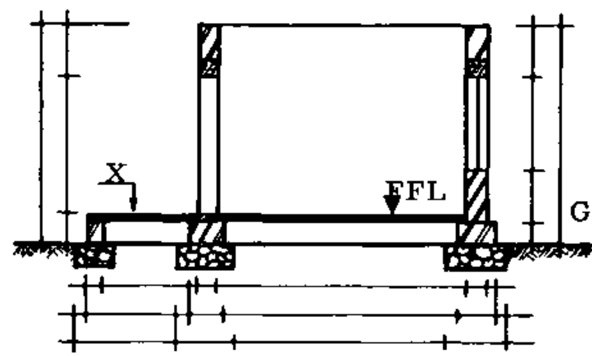

CROSS SECTION A - A

N . P . V . C .	
65.	4 HOURS

FOUNDATION PLAN FOR BUILDING WITH VERANDAH

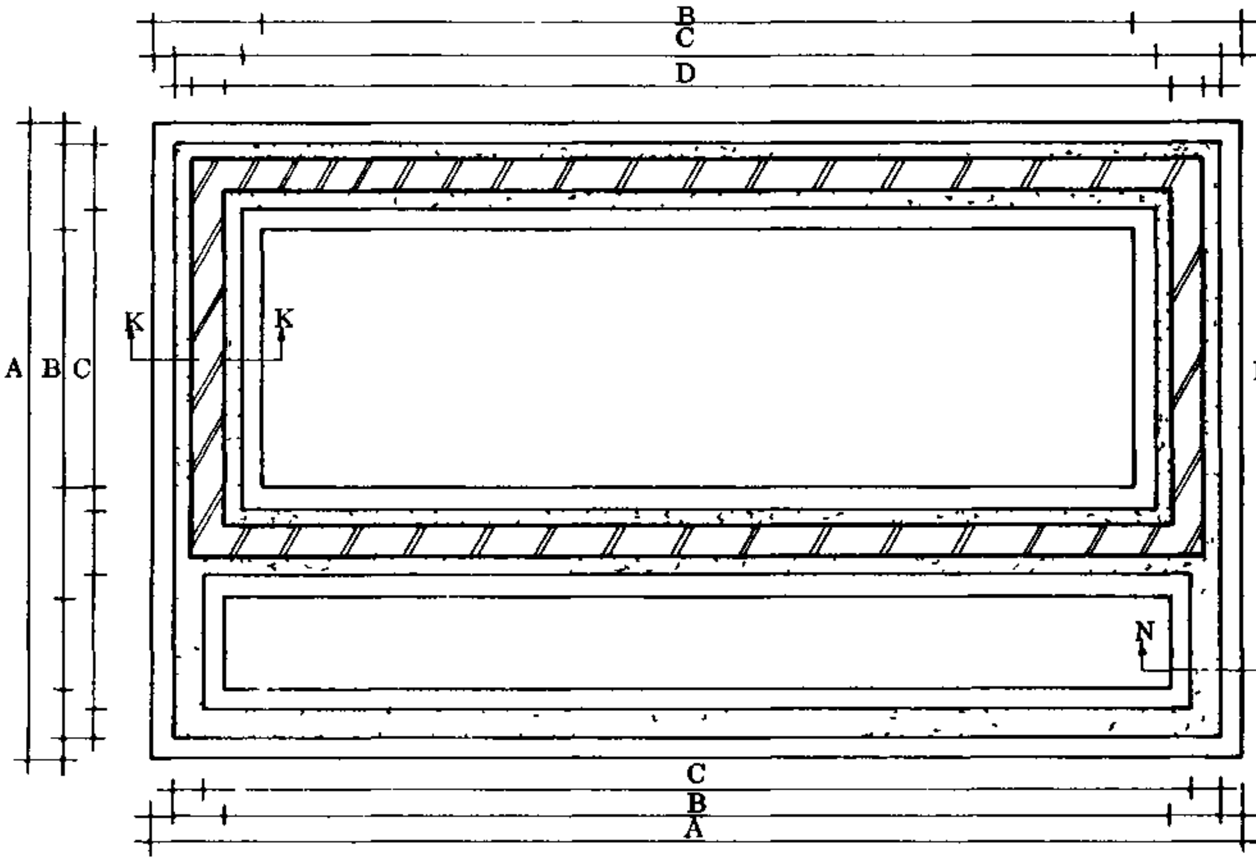

NOTICE

K - K & N - N ARE CROSS SECTIONS.

DIMENSION LINES:
A = TOTAL LENGTH
B = FOUNDATIONS
C = FOOTINGS
D = WALLS

EXERCISE

MAKE FOUNDATION PLANS FOR THE PLANS ON PAGE 65.

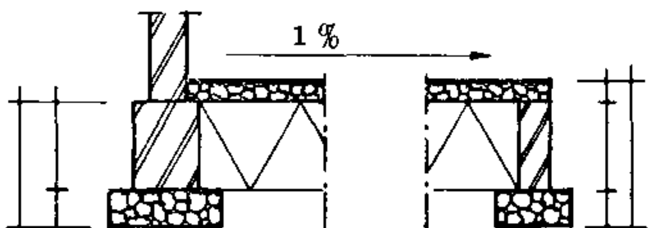

CROSS SECTION K - K

N - N

SURFACE OF FOOTING

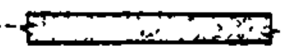

N . P . V . C .	
1½ HOURS	66.

FRAME WITH REBATE

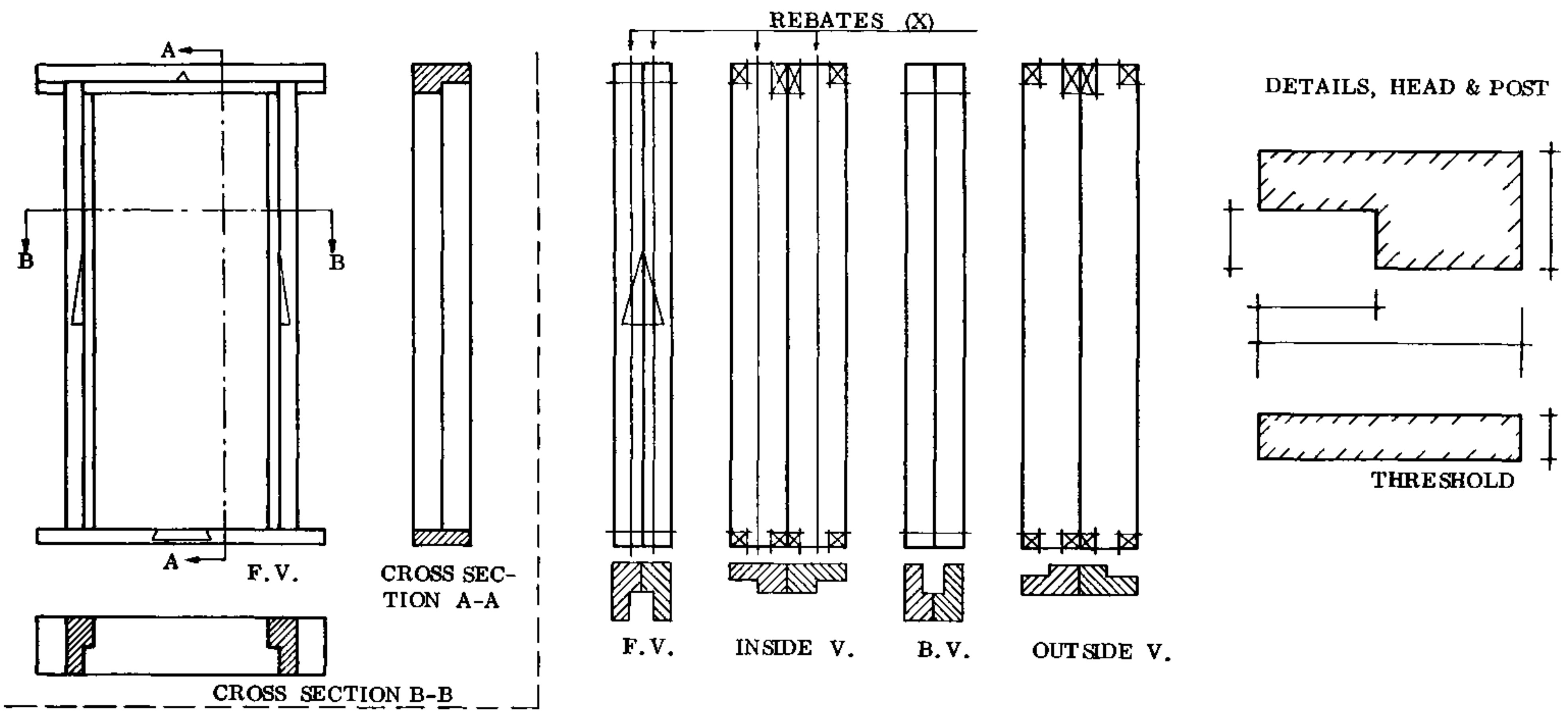

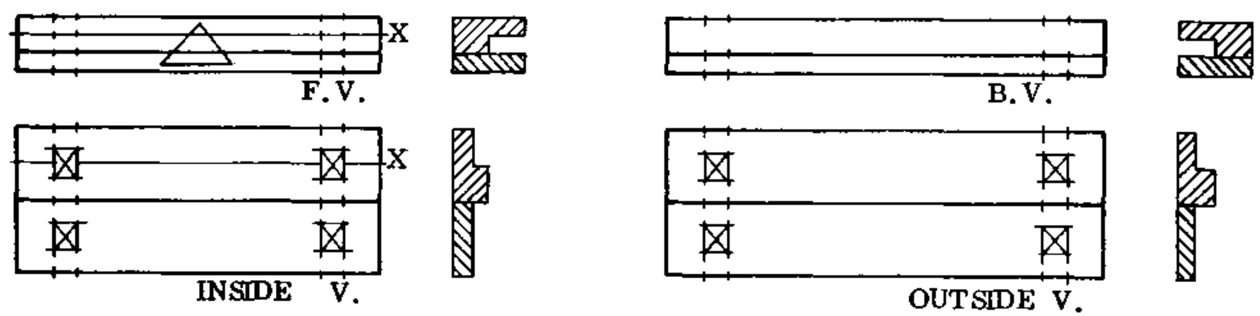

NOTICE
- CROSS SECTION A-A and B-B
  THERE IS NO T.V. or SIDE V.
- MARKING LINES FOR THE REBATES(X)
- STUDY THE CROSS SECTIONS OF THE
  MEMBERS(FOR MARKING OUT)
- SHOULDERS ARE DIFFERENT

EXERCISE
DRAW A DOORFRAME WITH THRESHOLD.
USE SCALE 1 : 10 (cm).
DRAW ALL MEMBERS AND MARK THEM
OUT FOR JOINTS.

N. P. V. C.	
67.	2 3/4 HOURS

WHEN TO REDUCE MORTICE AND TENON (use teaching aids)

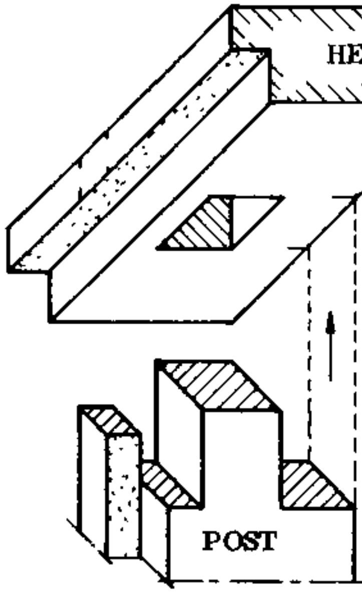

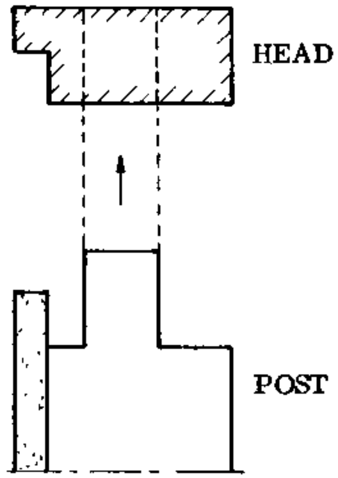

REBATE DOES NOT DISTURB
THE TENON.

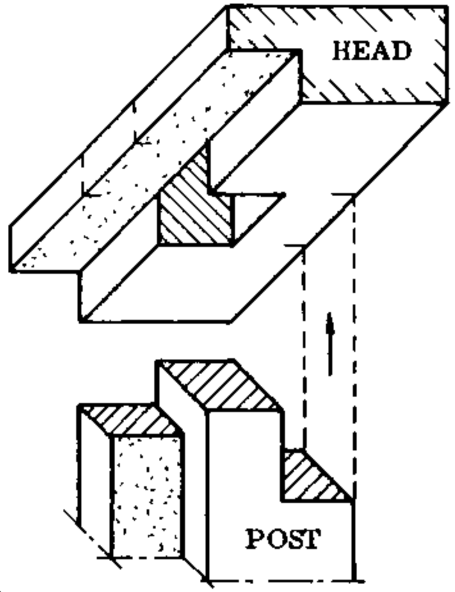

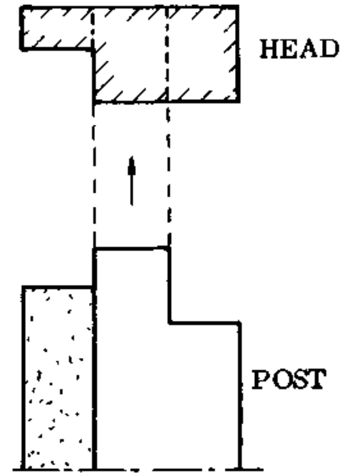

REBATE DOES NOT DISTURB
THE TENON.

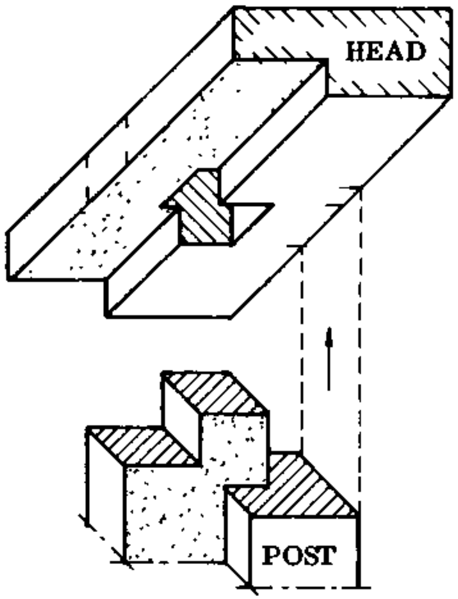

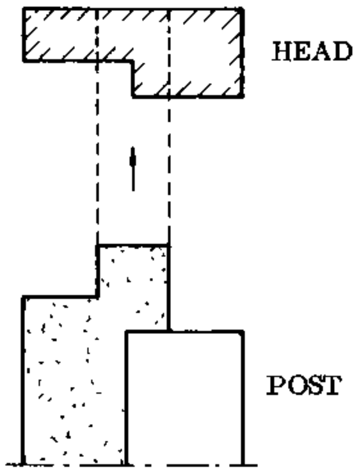

REBATE DOES DISTURB
THE TENON.

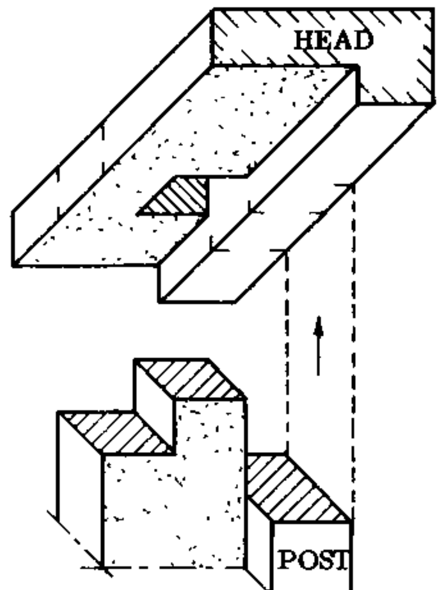

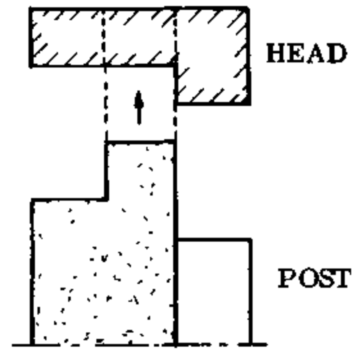

REBATE DOES DISTURB
THE TENON.

N. P. V. C.

68.

FRAME WITH CONCRETE SHOE

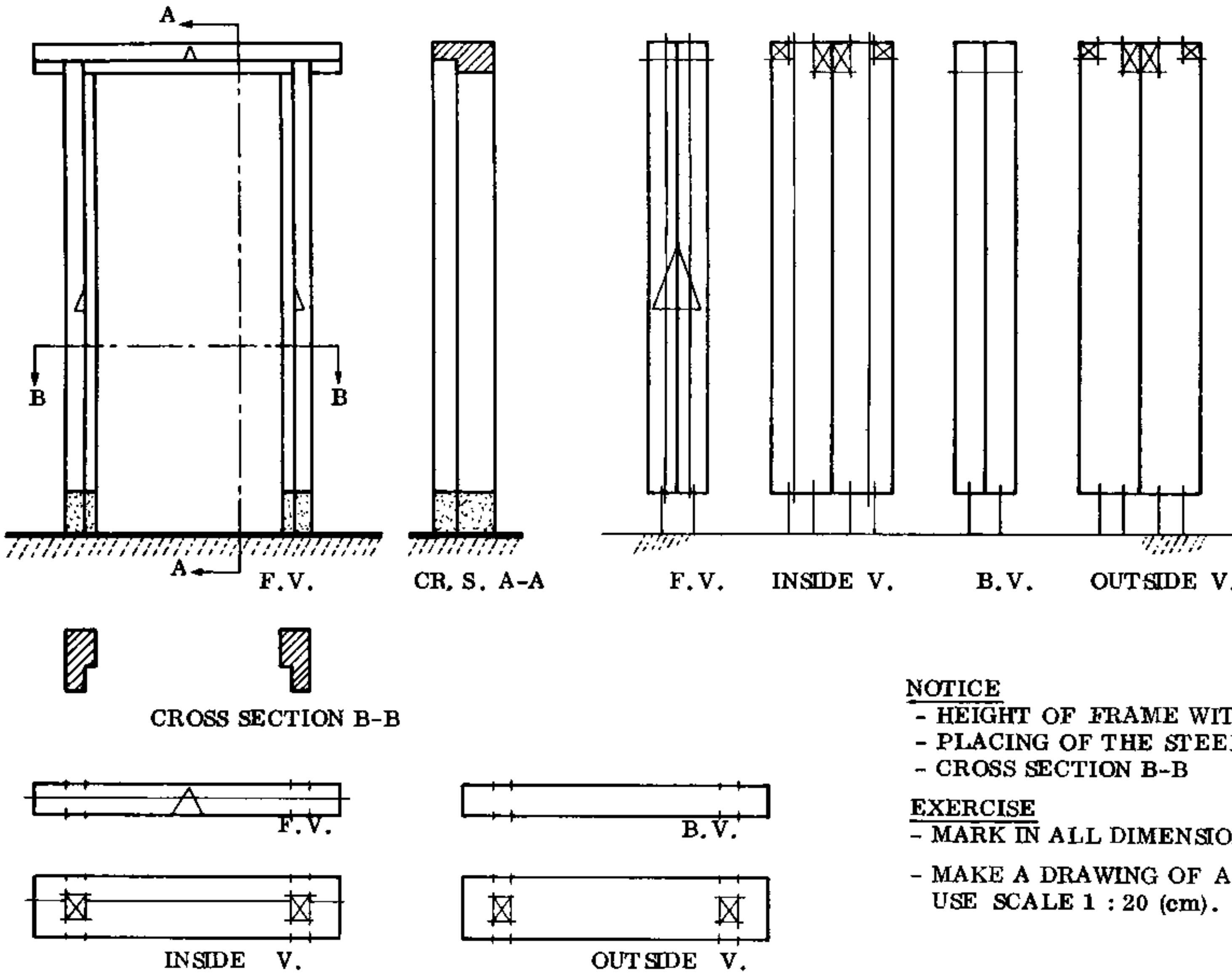

DETAIL:
DOWEL CONSTRUCTION

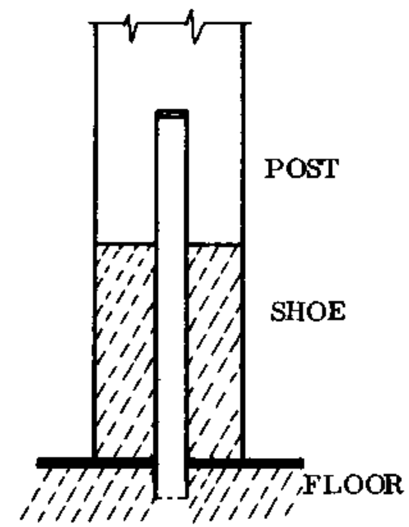

NOTICE
- HEIGHT OF FRAME WITH CONCRETE SHOE
- PLACING OF THE STEEL DOWELS
- CROSS SECTION B-B

EXERCISE
- MARK IN ALL DIMENSIONS.
- MAKE A DRAWING OF A DOOR FRAME WITH CONCRETE SHOE.
USE SCALE 1 : 20 (cm).

N. P. V. C.	
69.	2 ½ HOURS

FRAME WITH TRANSOM AND THRESHOLD

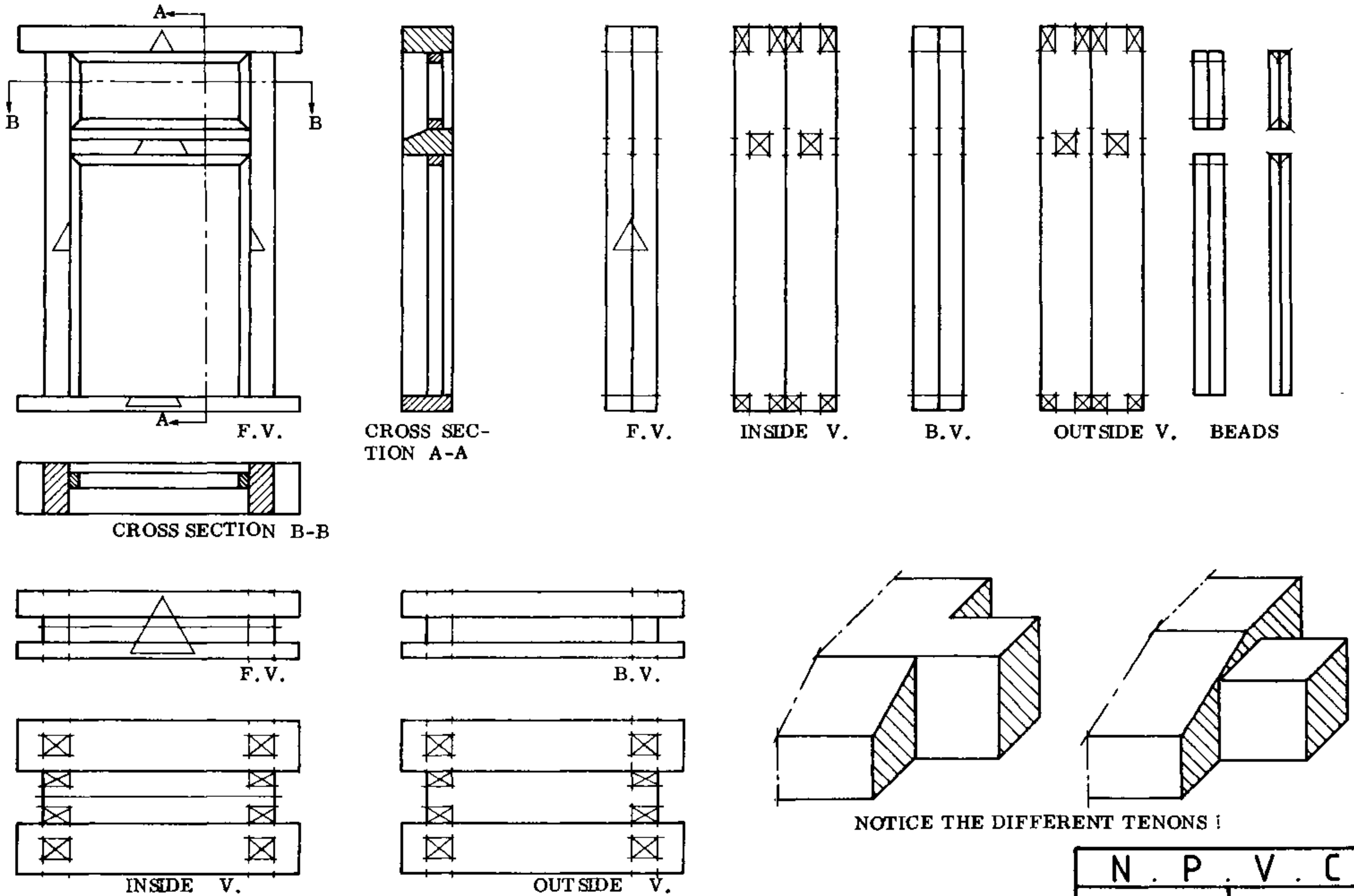

NOTICE THE DIFFERENT TENONS !

N . P . V . C .		
3 HOURS	70.	

WHEN TO REDUCE MORTICE AND TENON

(1)

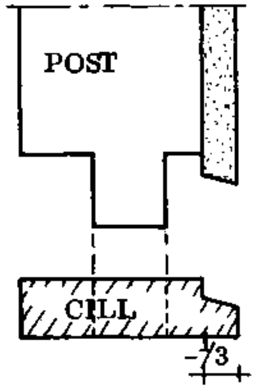

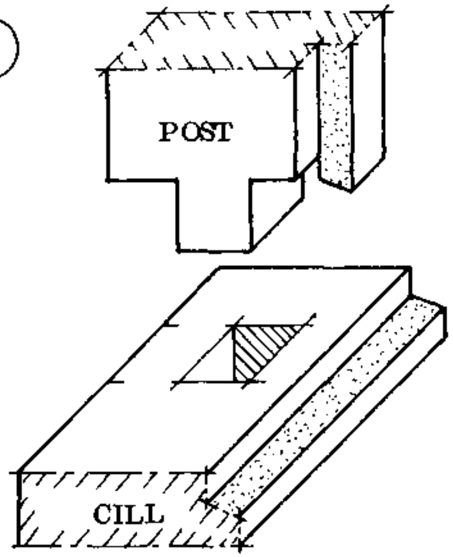

REBATE DOES NOT DISTURB
THE TENON.

(2)

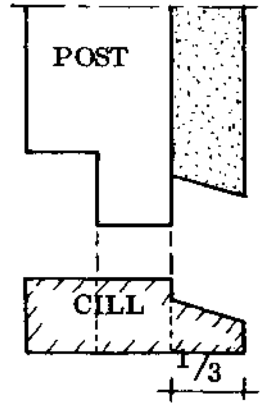

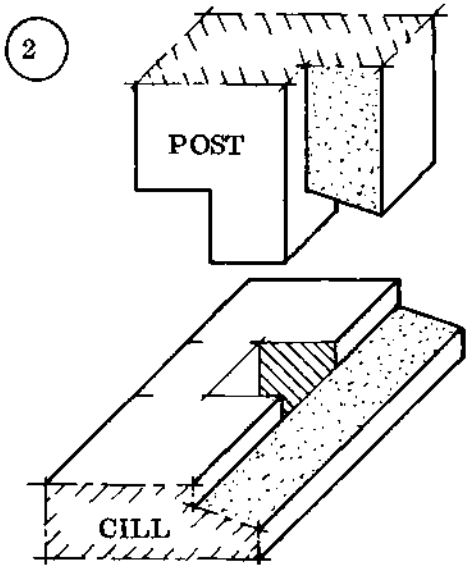

REBATE DOES NOT DISTURB
THE TENON.

(3)

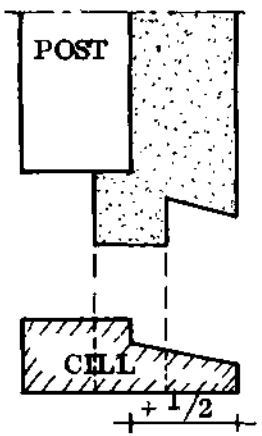

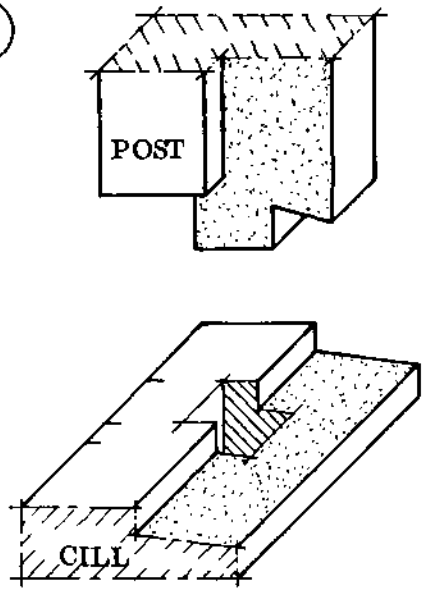

REBATE DOES DISTURB
THE TENON.

(4)

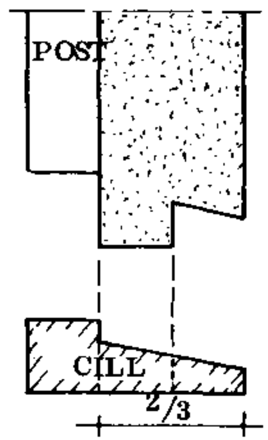

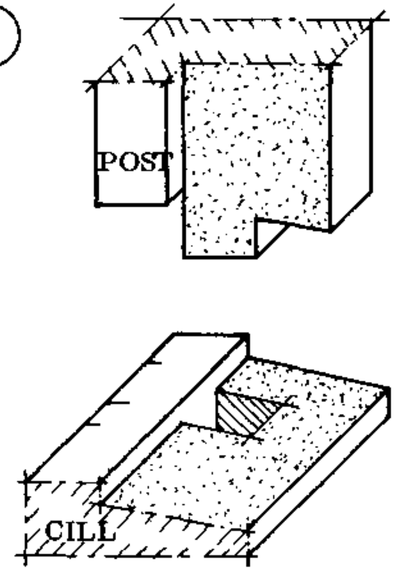

REBATE DOES DISTURB
THE TENON.

N.P.V.C.

WINDOW FRAME WITH REBATE

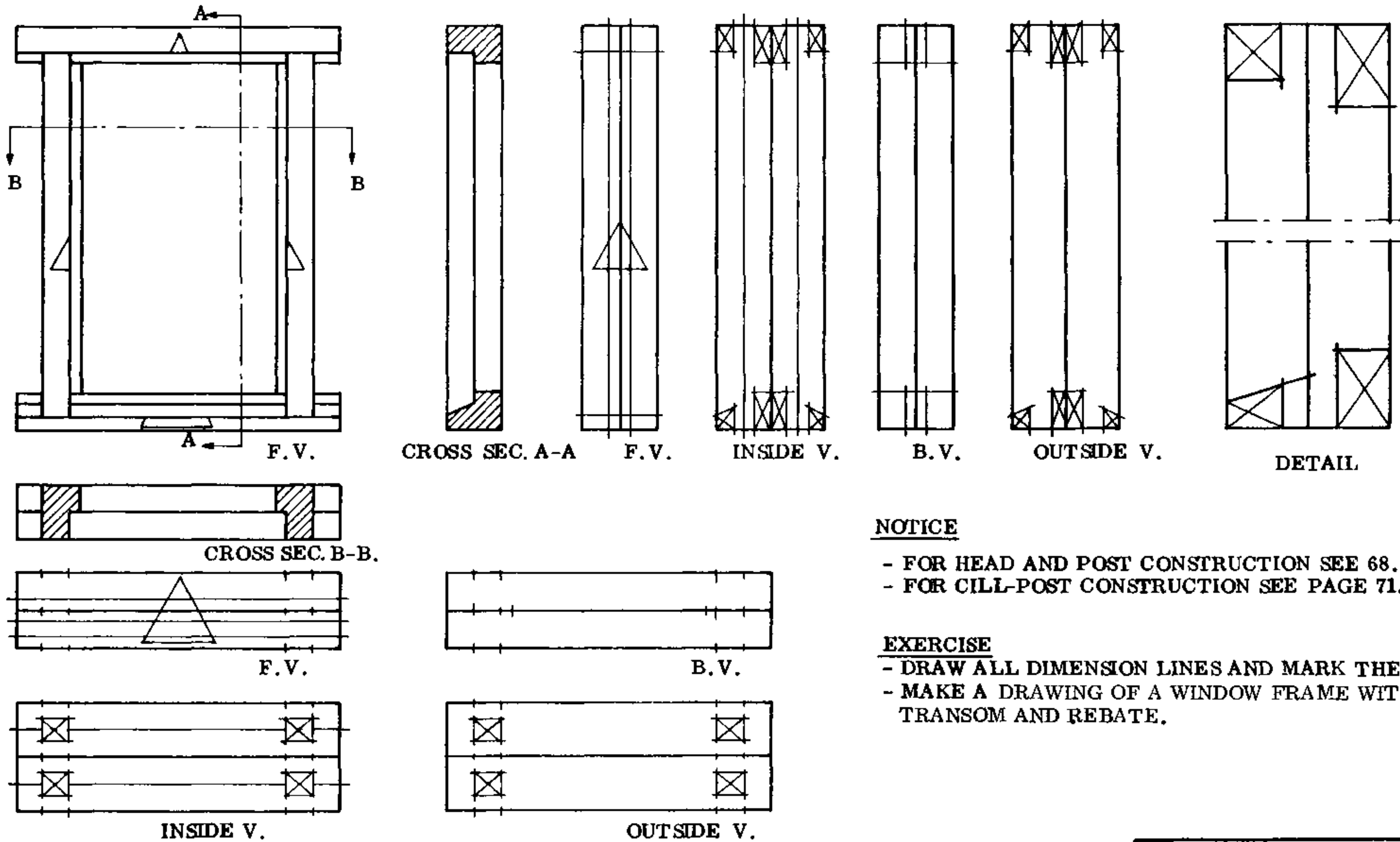

NOTICE

- FOR HEAD AND POST CONSTRUCTION SEE 68.
- FOR CILL-POST CONSTRUCTION SEE PAGE 71.

EXERCISE

- DRAW ALL DIMENSION LINES AND MARK THEM.
- MAKE A DRAWING OF A WINDOW FRAME WITH TRANSOM AND REBATE.

N . P . V . C .	
2 ½ HOURS	72.

LEDGED, BRACED AND BATTENED CASEMENT

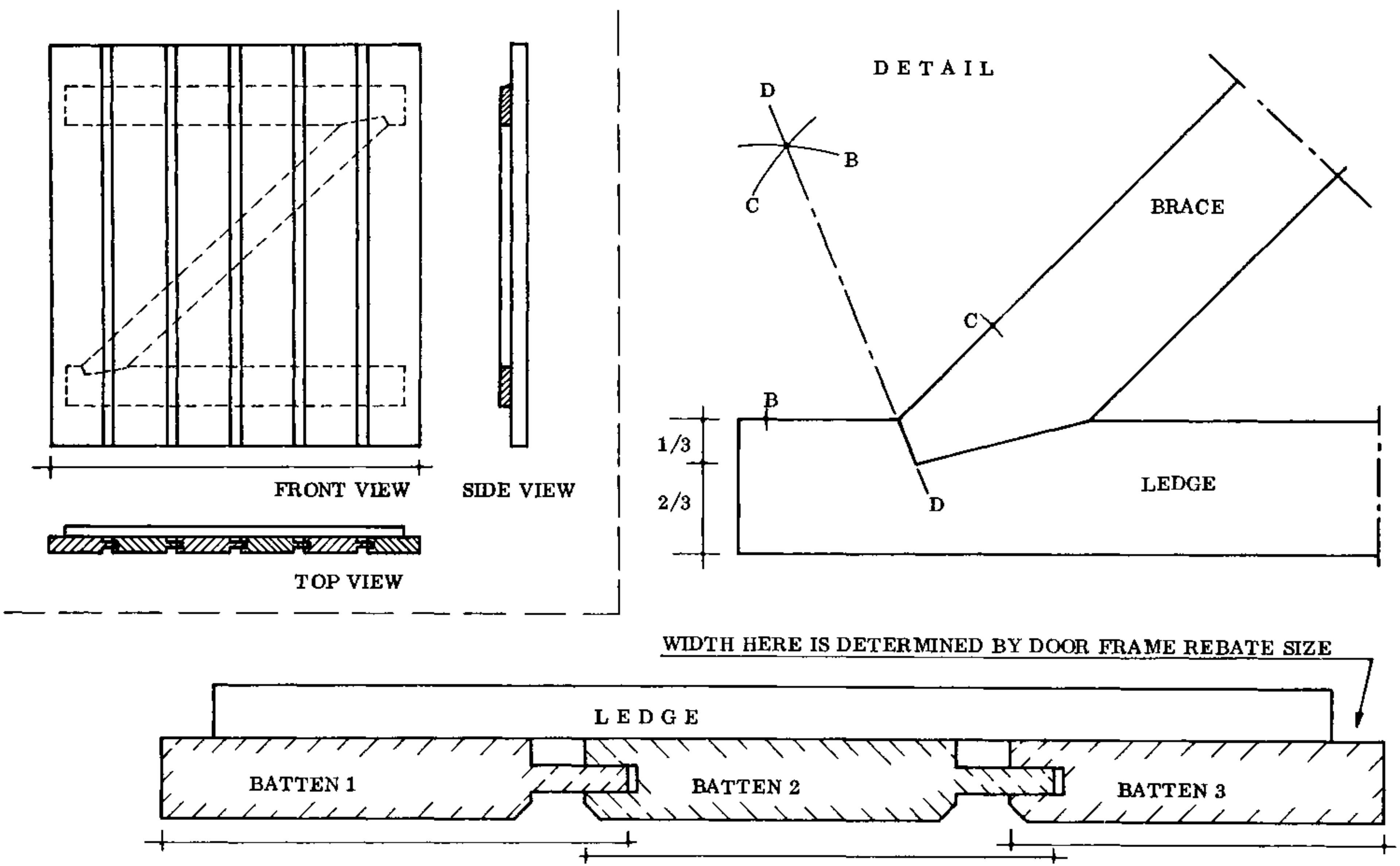

N . P . V . C .	
73.	2 HOURS

FLUSH CASEMENT

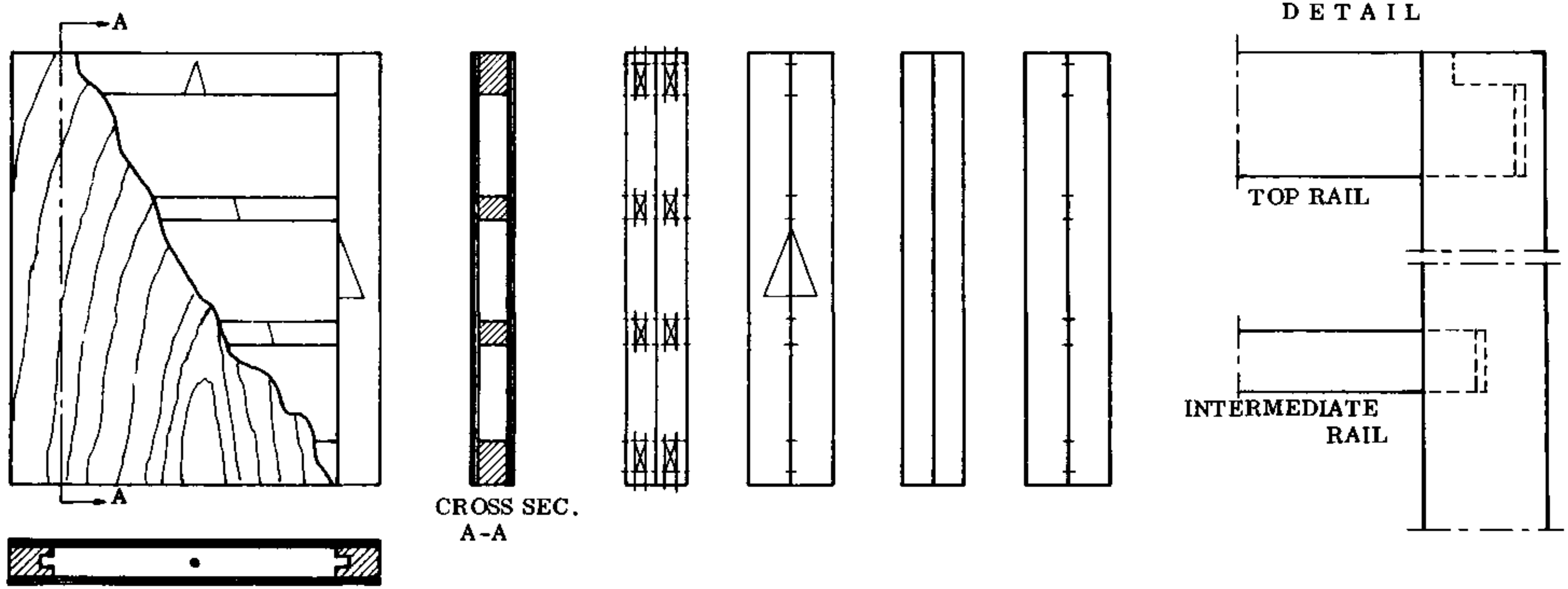

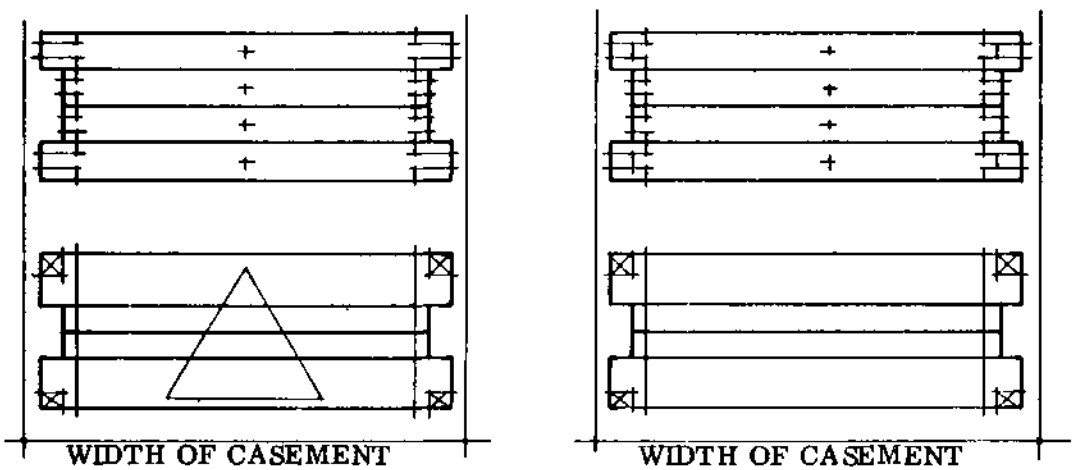

NOTICE

- HAUNCHED TENON ON TOP AND BOTTOM RAILS
- SHORT TENON ON INTERMEDIATE RAILS
- HOLES FOR VENTILATION
- FOR DOORS: ADD LOCK BLOCK

EXERCISE

- DRAW ALL DIMENSION LINES.
- MARK IN ALL DIMENSIONS.
- MAKE A DRAWING OF A FLUSH DOOR.

N . P . V . C .	
2 3/4 HOURS	74.

PANELLED CASEMENT

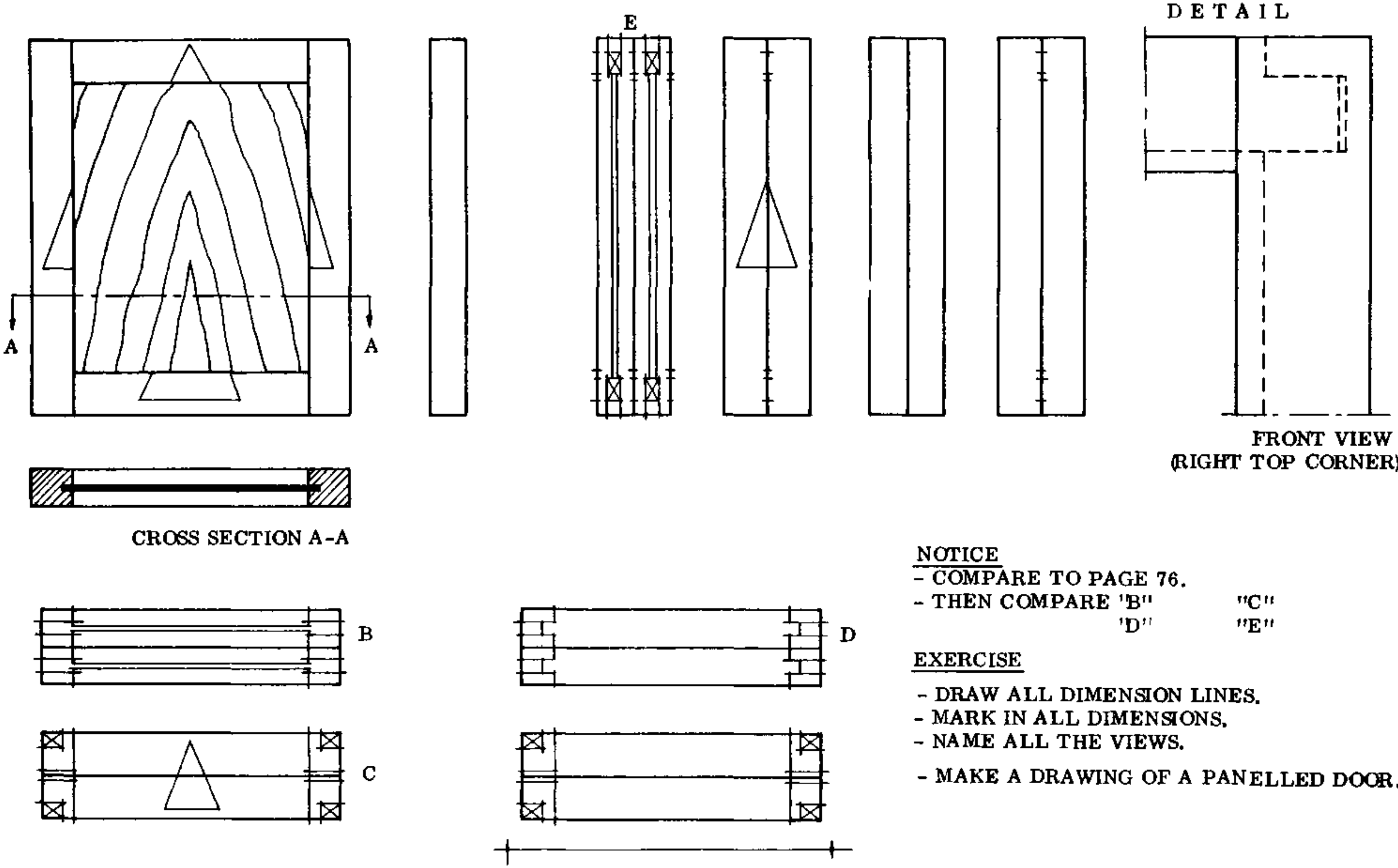

NOTICE
- COMPARE TO PAGE 76.
- THEN COMPARE 'B'' ''C''
'D'' ''E''

EXERCISE
- DRAW ALL DIMENSION LINES.
- MARK IN ALL DIMENSIONS.
- NAME ALL THE VIEWS.
- MAKE A DRAWING OF A PANELLED DOOR.

REMEMBER THAT THE TOP AND BOTTOM RAILS ARE SHORTER BECAUSE OF THE STOPPED MORTICE AND TENON !

N . P . V . C .	
75.	2 1/2 HOURS

GROOVED STILE AND TOPRAIL MARKING OUT

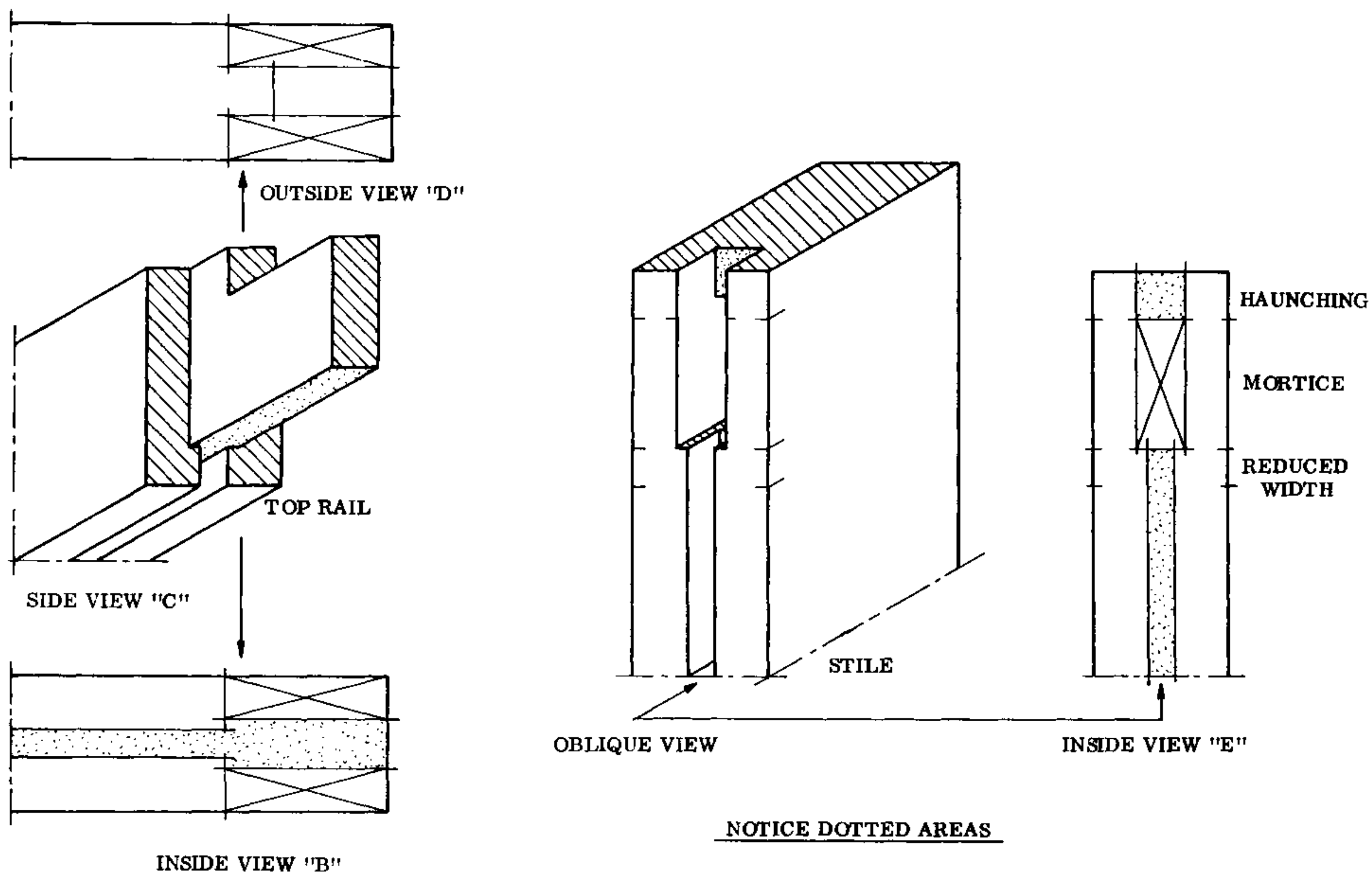

NOTICE DOTTED AREAS

N.P.V.C.

REBATED CASEMENT

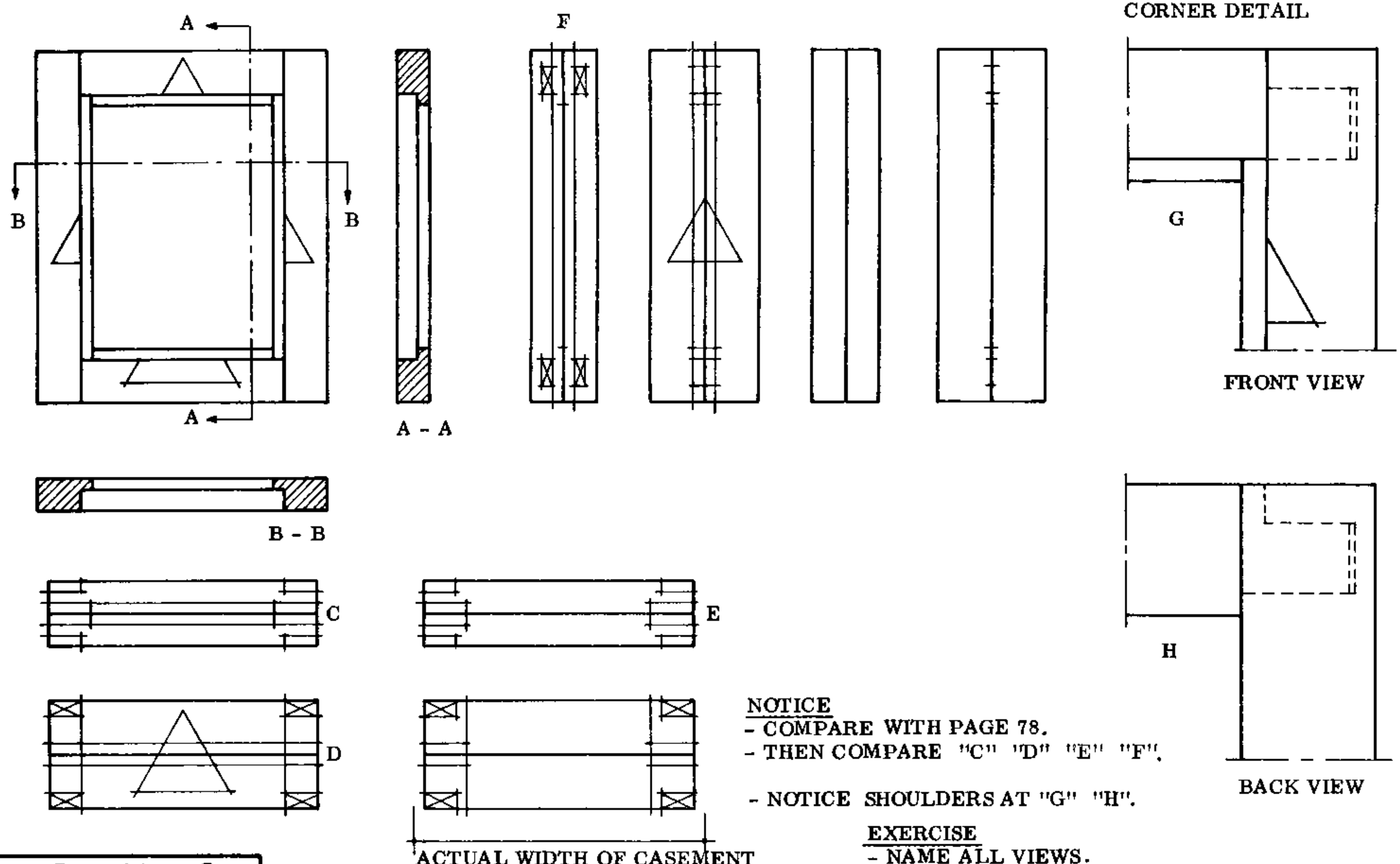

NOTICE
- COMPARE WITH PAGE 78.
- THEN COMPARE "C" "D" "E" "F".

- NOTICE SHOULDERS AT "G" "H".

EXERCISE
- NAME ALL VIEWS.
- DRAW ALL DIMENSION LINES.
- MARK IN ALL DIMENSIONS.
- MAKE A DRAWING OF A REBATED DOOR.

N . P . V . C .	
77.	2¾ HOURS

REBATED STILE AND TOPRAIL CONSTRUCTION

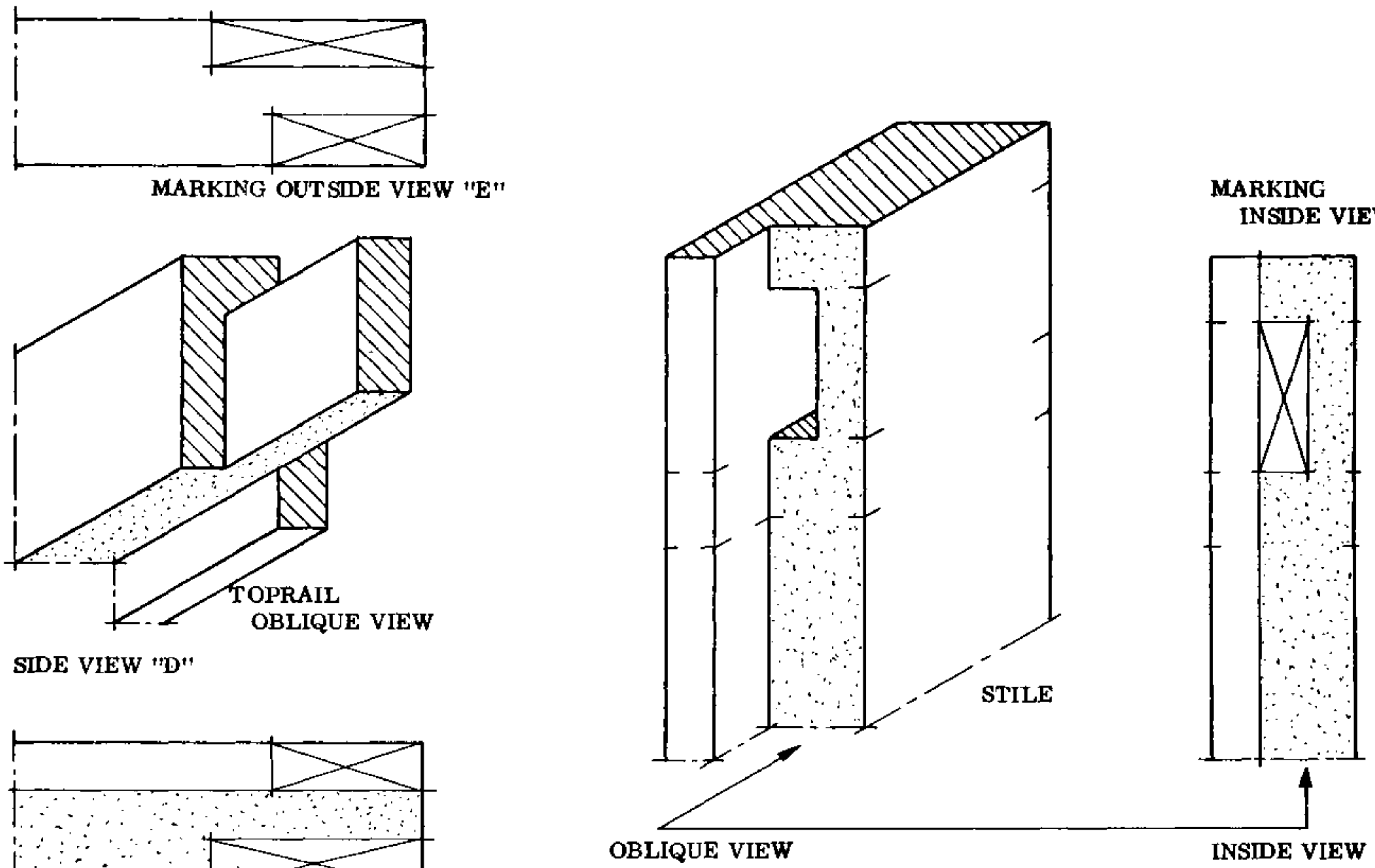

NOTICE DOTTED AREAS

WORKING DRAWINGS

TO BE ABLE TO MAKE A WORKING DRAWING FOR A BUILDING YOU NEED A SKETCHPLAN WITH THE NECESSARY DETAILS SUCH AS INSIDE DIMENSIONS OF THE ROOMS, THE POSITIONS OF THE WINDOWS AND DOORS, ETC.

ON THE NEXT PAGE YOU WILL FIND A LAY-OUT OF HOW TO WRITE DOWN ALL THE TECHNICAL DATA REGARDING MATERIALS AND SOME DIMENSIONS.

SKETCH PLAN

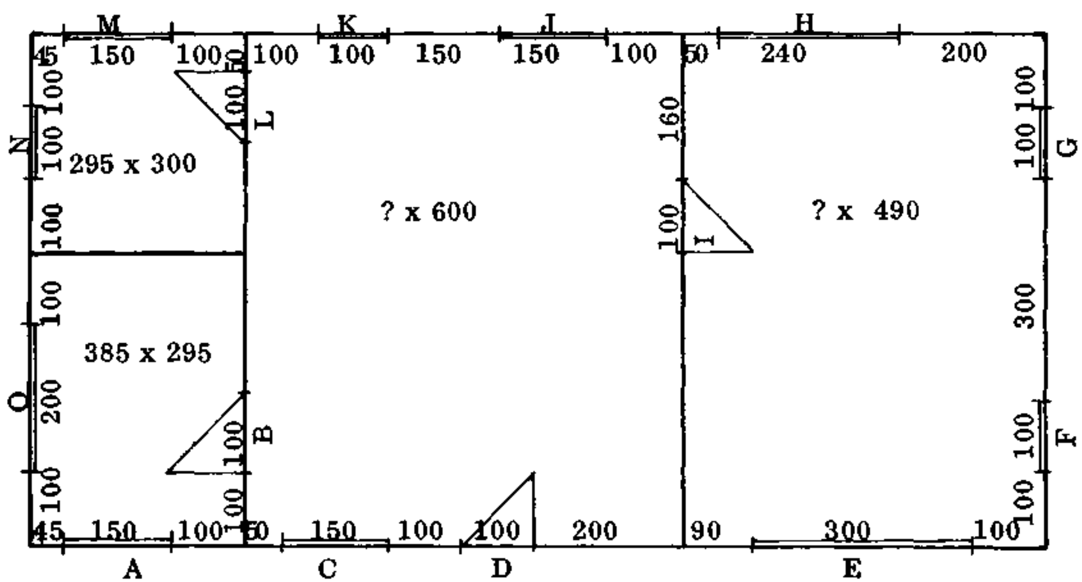

SKETCH PLAN

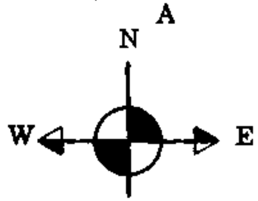

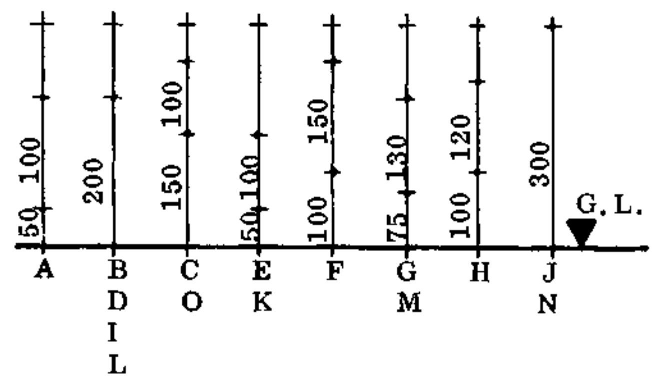

WALL THICKNESS = 15 cm

TECHNICAL DATA

ROOF CONSTRUCTION , MAIN BUILDING

KIND OF ROOF			ODUM WOOD
RISE OF ROOF		cm	
RISE OF TRUSS		cm	
KIND OF COVERING	x	cm	ALUMINIUM
SPAN OF TRUSS		cm	
ROOF OVERHANG, LONG SIDES		cm	
ROOF PROJECTION AT GABLE		cm	
CEILING THICKNESS		cm	PLYWOOD
FASCIA BOARDS	x	cm	WAWA
RAFTERS	x	cm	ODUM WOOD
PURLINS	x	cm	,, ,,
TIE BEAM	x	cm	,, ,,
BRACES	x	cm	,, ,,
WALL PLATE	x	cm	,, ,,

VERANDAH, ROOF CONSTRUCTION ODUM WOOD

KIND OF ROOF			ODUM WOOD
RISE OF ROOF		cm	
SPAN OF TRUSS		cm	
OVERHANG ON LONG SIDES		cm	
PROJECTION AT GABLE ENDS		cm	
CEILING THICKNESS		cm	PLYWOOD
FASCIA BOARDS	x	cm	WAWA
RAFTERS	x	cm	ODUM WOOD
PURLINS	x	cm	,, ,,
TIE BEAM	x	cm	,, ,,
BRACES	x	cm	,, ,,

MAIN BUILDING

FOUNDATION	x	cm	CONCRETE
FOOTING HEIGHT ABOVE G.L.		cm	
FOOTING WIDTH		cm	SANDCRETE
WALL THICKNESS		cm	LANDCRETE
PLASTER THICKNESS(inside)		cm	CEMENT PLASTER
PLASTER THICKNESS(outside)		cm	,, ,,
FLOOR THICKNESS		cm	ONE COURSE WORK

VERANDAH MAIN BUILDING

COLUMNS	x	cm	REINFORCED CONCRETE
EAVE BEAM	x	cm	REINFORCED CONCRETE
EAVE PLATE	x	cm	ODUM WOOD
FLOOR SLOPE		%	PER METER
FOOTING HEIGHT ABOVE G.L.		cm	
FOOTING WIDTH		cm	SANDCRETE
FOUNDATION	x	cm	CONCRETE
FLOOR THICKNESS		cm	ONE COURSE WORK

DIRECTION OF BUILDING EAST / WEST NORTH - SOUTH

SPECIAL REQUIREMENTS

N . P . V . C .

80.

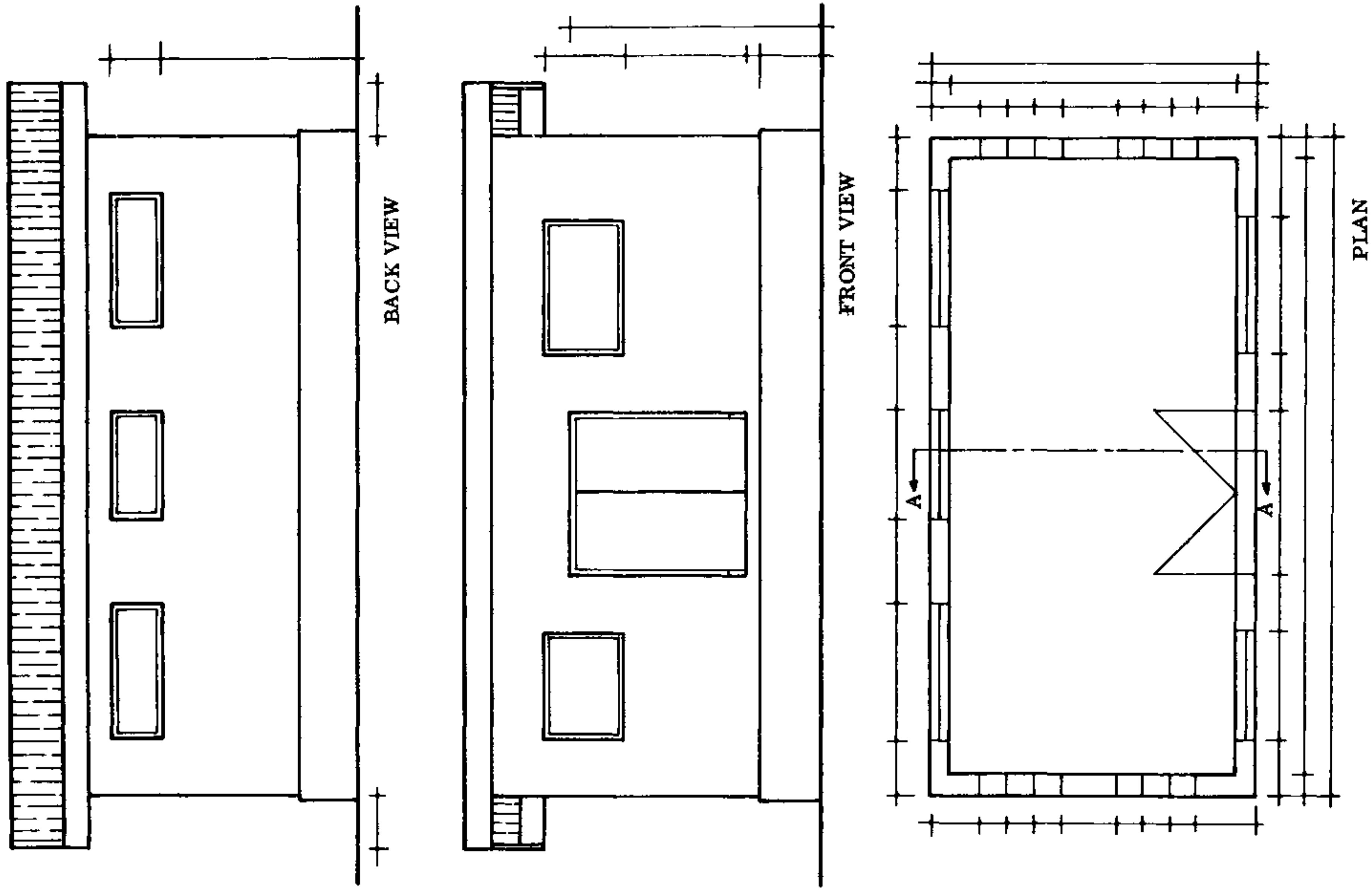

EXERCISE: MAKE AN ORTHOGRAPHIC DRAWING WITH CROSS SECTION OF A BUILDING WITH PENTROOF. USE SCALE 1 : 100 (cm).

N . P . V . C .	
81.	5 HOURS

TEAR OUT THIS PAGE AND GLUE IT TO PAGE 81

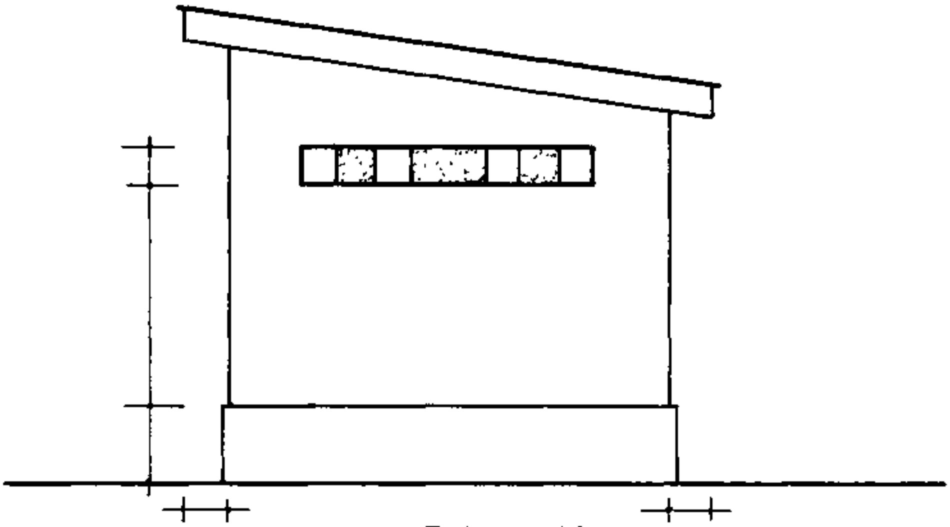

RIGHT SIDE VIEW

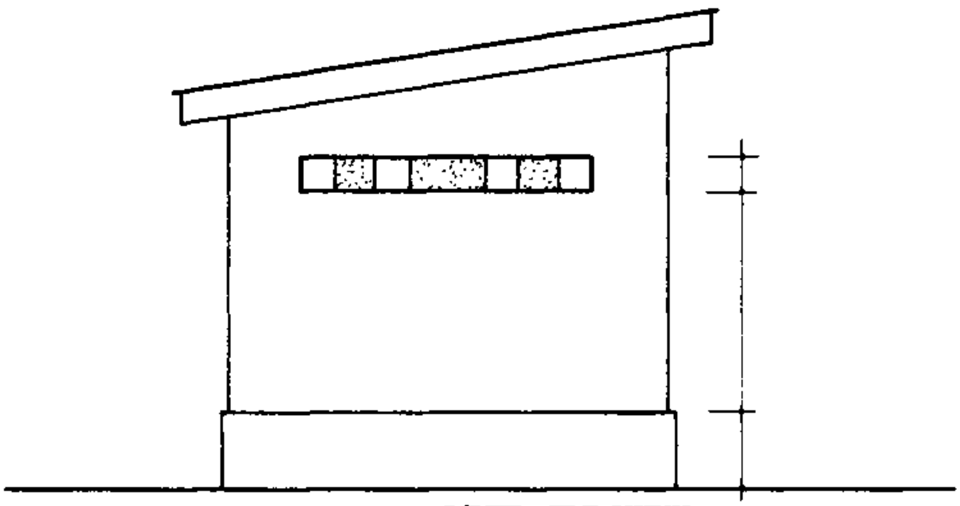

LEFT SIDE VIEW

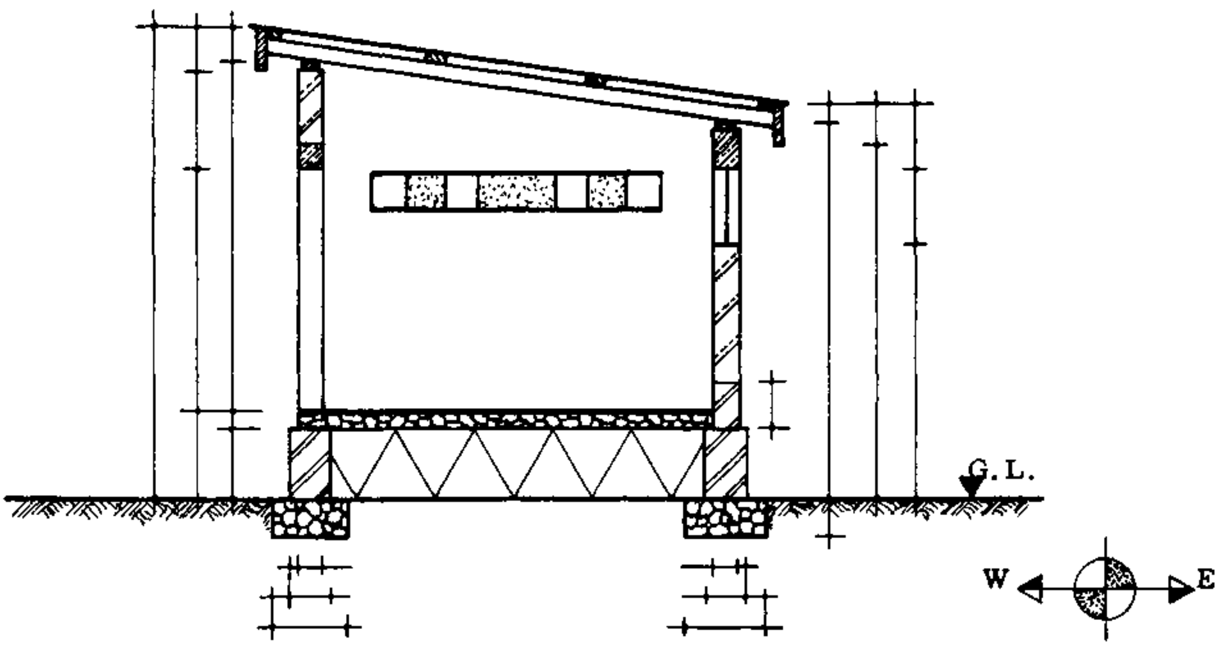

CROSS SECTION A - A

N.P.V.C.
82.

BUILDING WITH PENTROOF

PENT ROOF PLAN

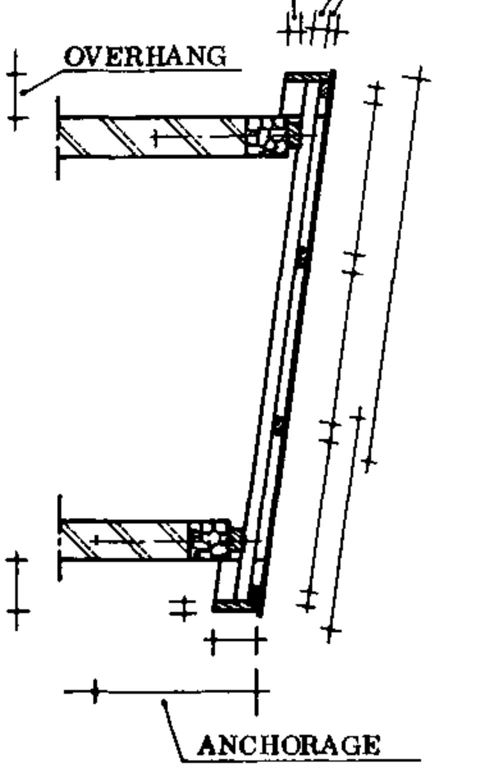

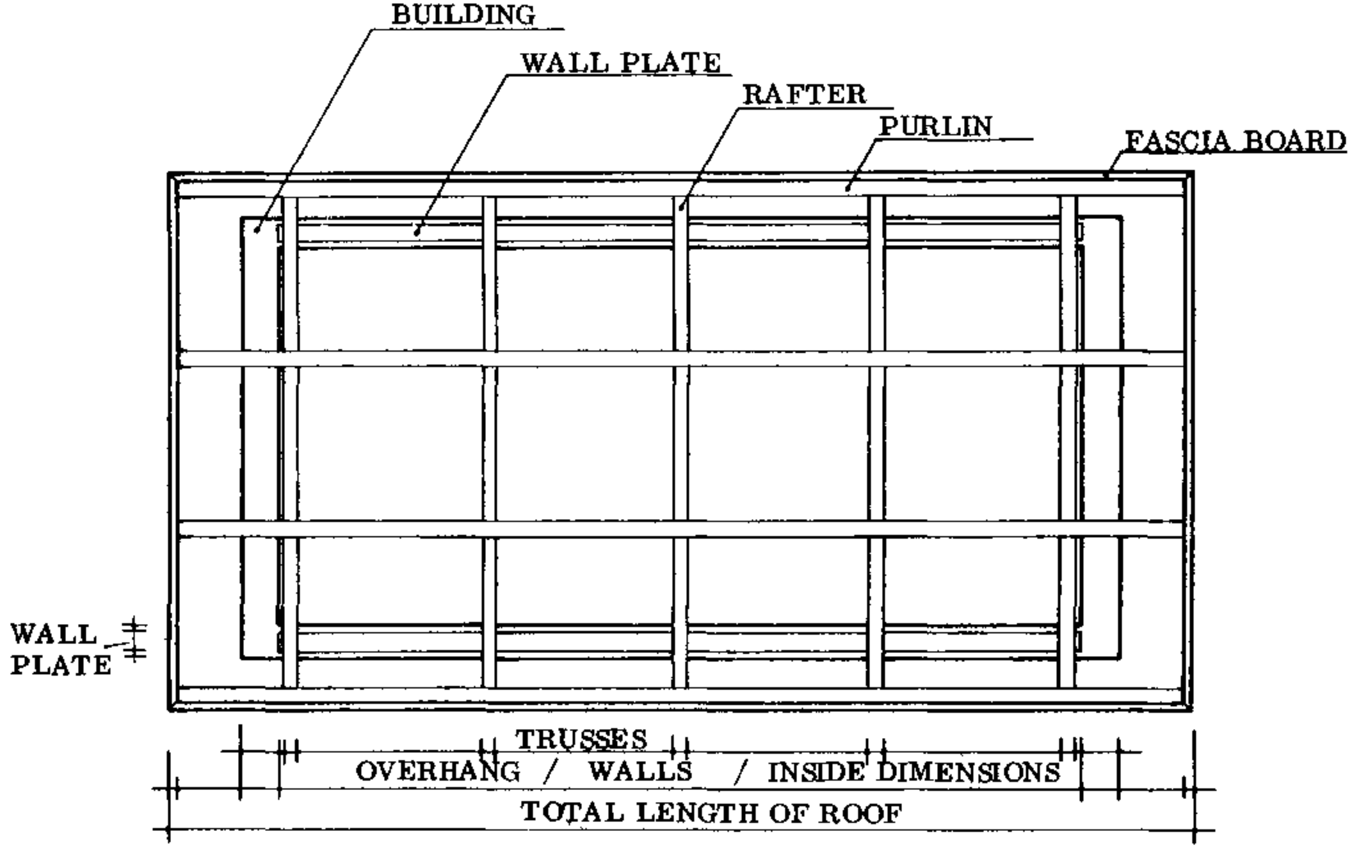

REMEMBER:
- LENGTH OF THE ROOF IS MEASURED ON THE PLAN.
- WIDTH OF THE ROOF IS MEASURED ON THE CROSS SECTION.
- THE OVERHANG OF THE ROOF IS MEASURED SQUARE TO THE WALL.
- FIRST DRAW THE CROSS SECTION, THEN THE PLAN.

EXERCISE : MAKE A ROOF PLAN FOR A STORE WITH A PENT ROOF.
USE A SCALE OF 1 : 50 (cm).

N . P . V . C .	
83.	2½ HOURS

PARAPETTED PENT ROOF

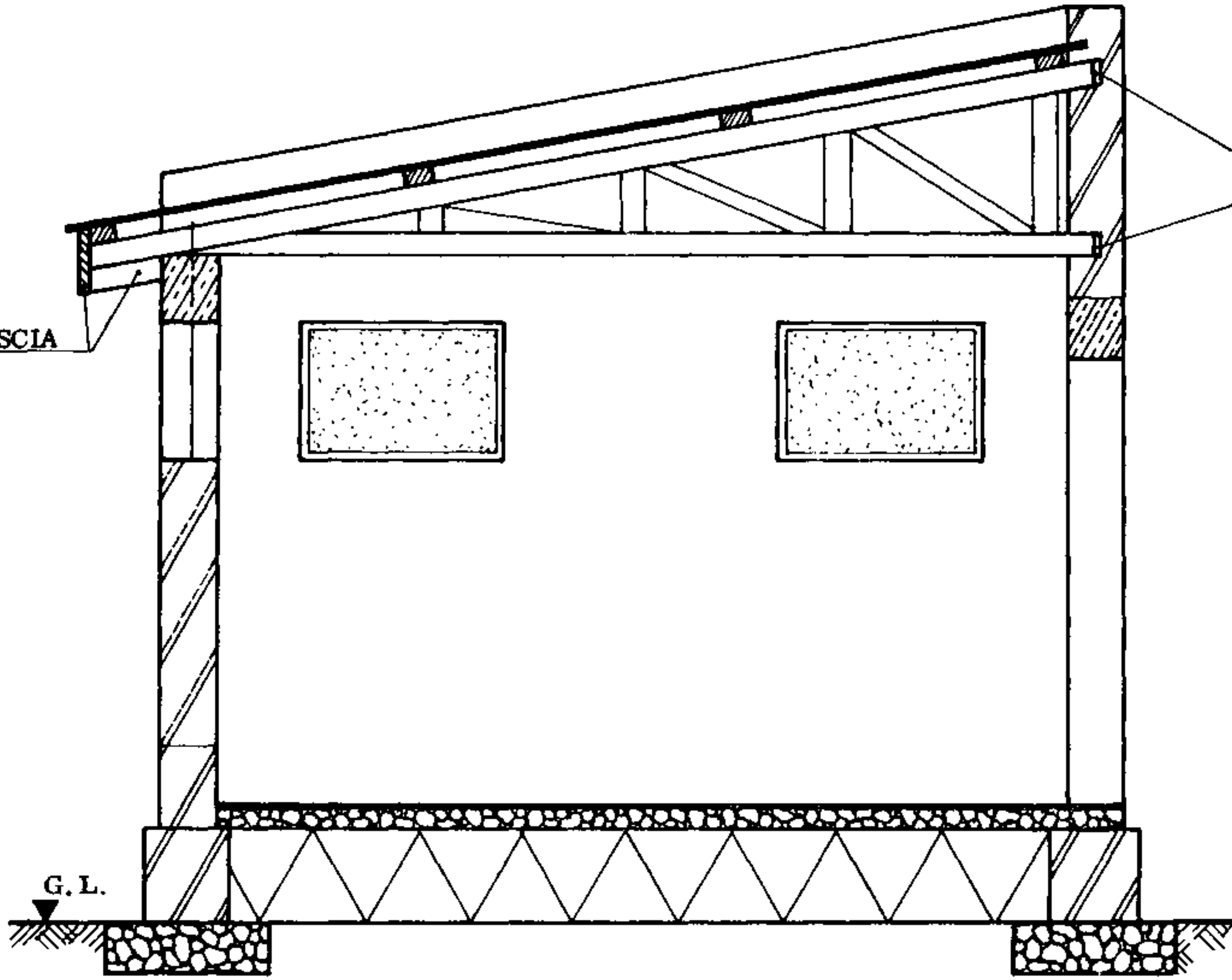

CROSS SECTION K - K

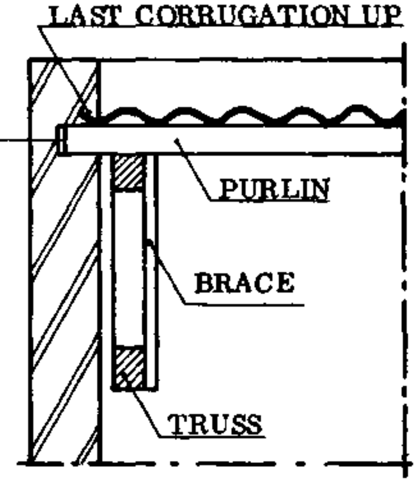

DETAIL

NOTICE
- EXPANSION GAPS AT "A"
- FASCIA OVERHANG
- PARAPET PROJECTION
- CONCRETE BELT INSTEAD OF A WOODEN WALL PLATE
- FOR BACK VIEW SEE PAGE 86

EXERCISE
MAKE AN ORTHOGRAPHIC DRAWING WITH CROSS SECTION OF A STORE WITH A PARAPETTED ROOF.

STUDY CAREFULLY THE BACK VIEW OF THE BUILDING ON PAGE 86.

PARAPETTED GABLE ROOF

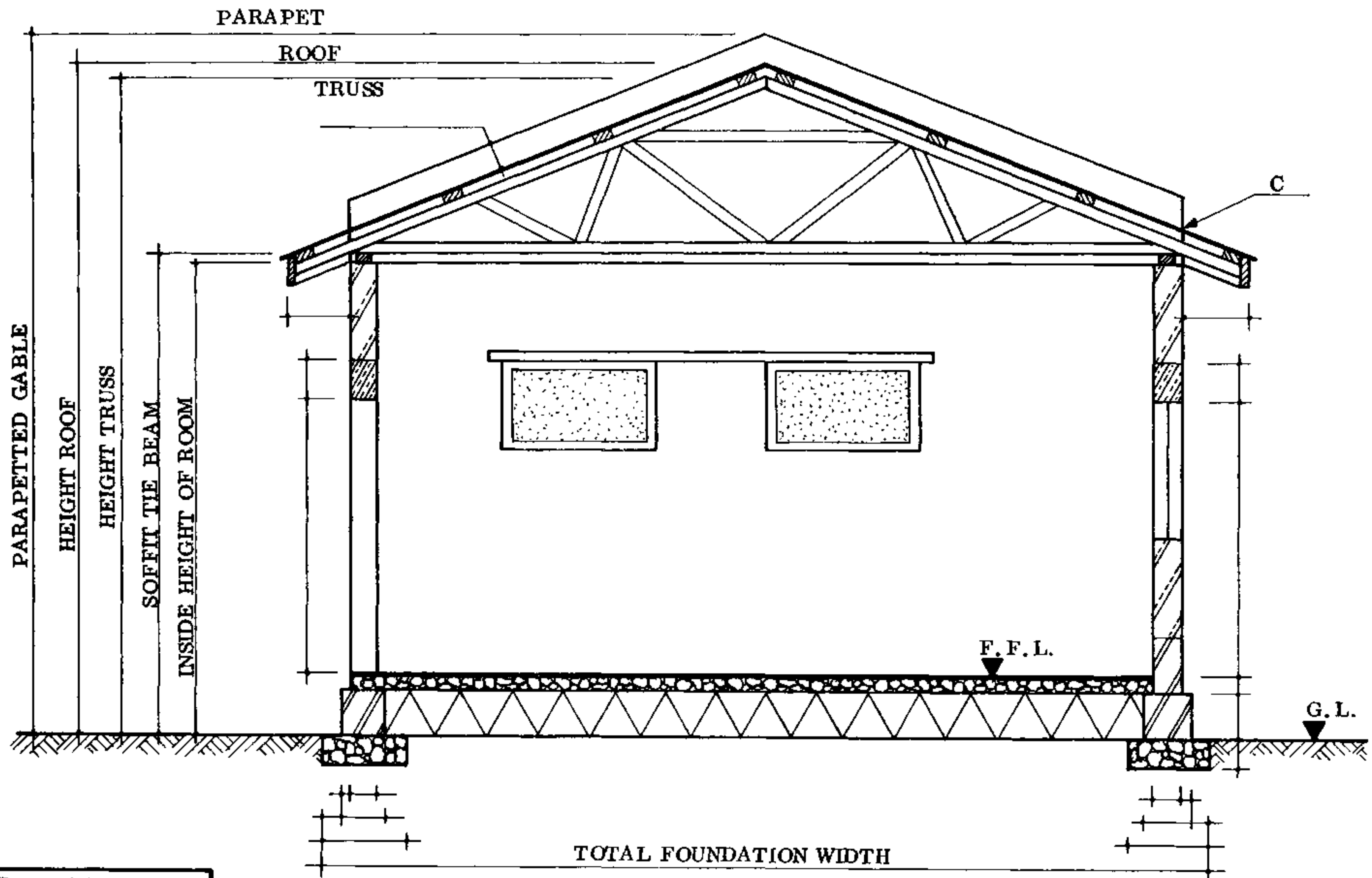

N.P.V.C.	
85.	

BACK VIEW OF A BUILDING WITH GABLE ROOF

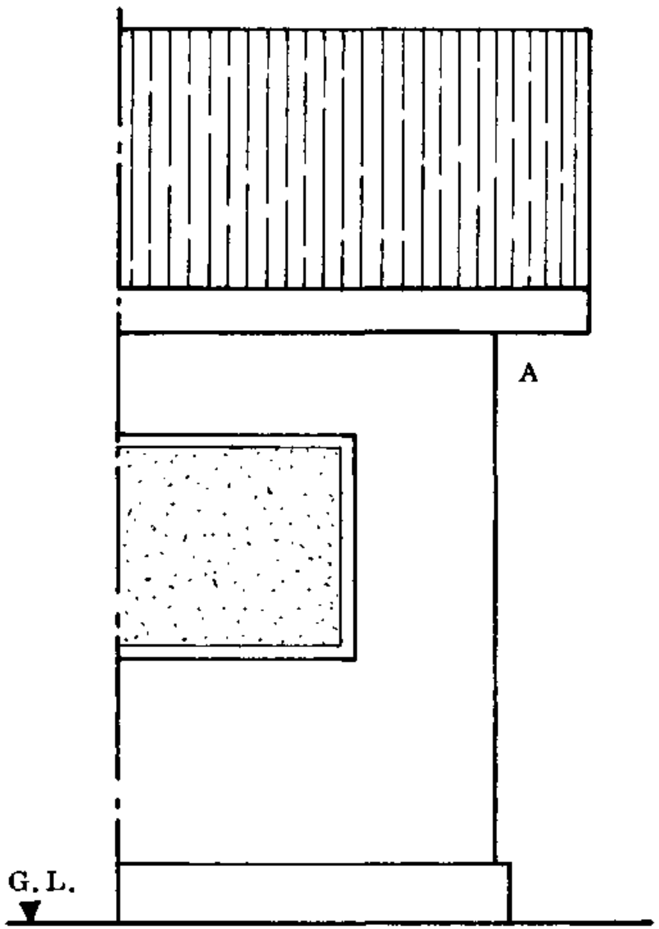

BACK VIEW

GABLE PROJECTION

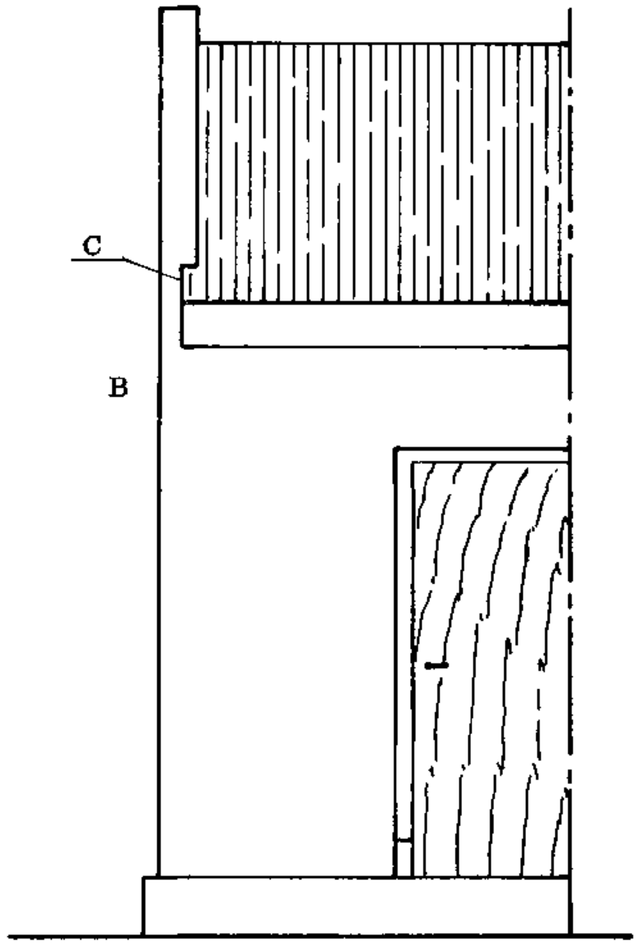

BACK VIEW

PARAPETTED GABLE

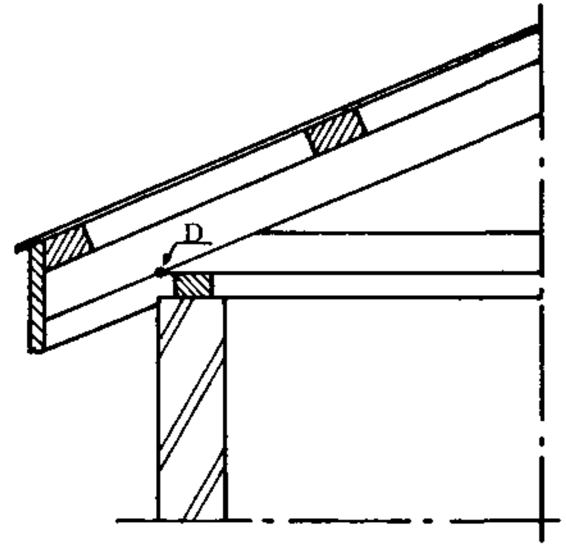

ENLARGED DETAIL

NOTICE

- PROJECTION AT GABLE A
- PARAPETTED GABLE AT B
- THE SHEETS ARE SET INTO THE WALL AT C.
- THE SPAN OF THE TRUSS IS MEASURED FROM POINT D.

N . P . V . C .	
	86.

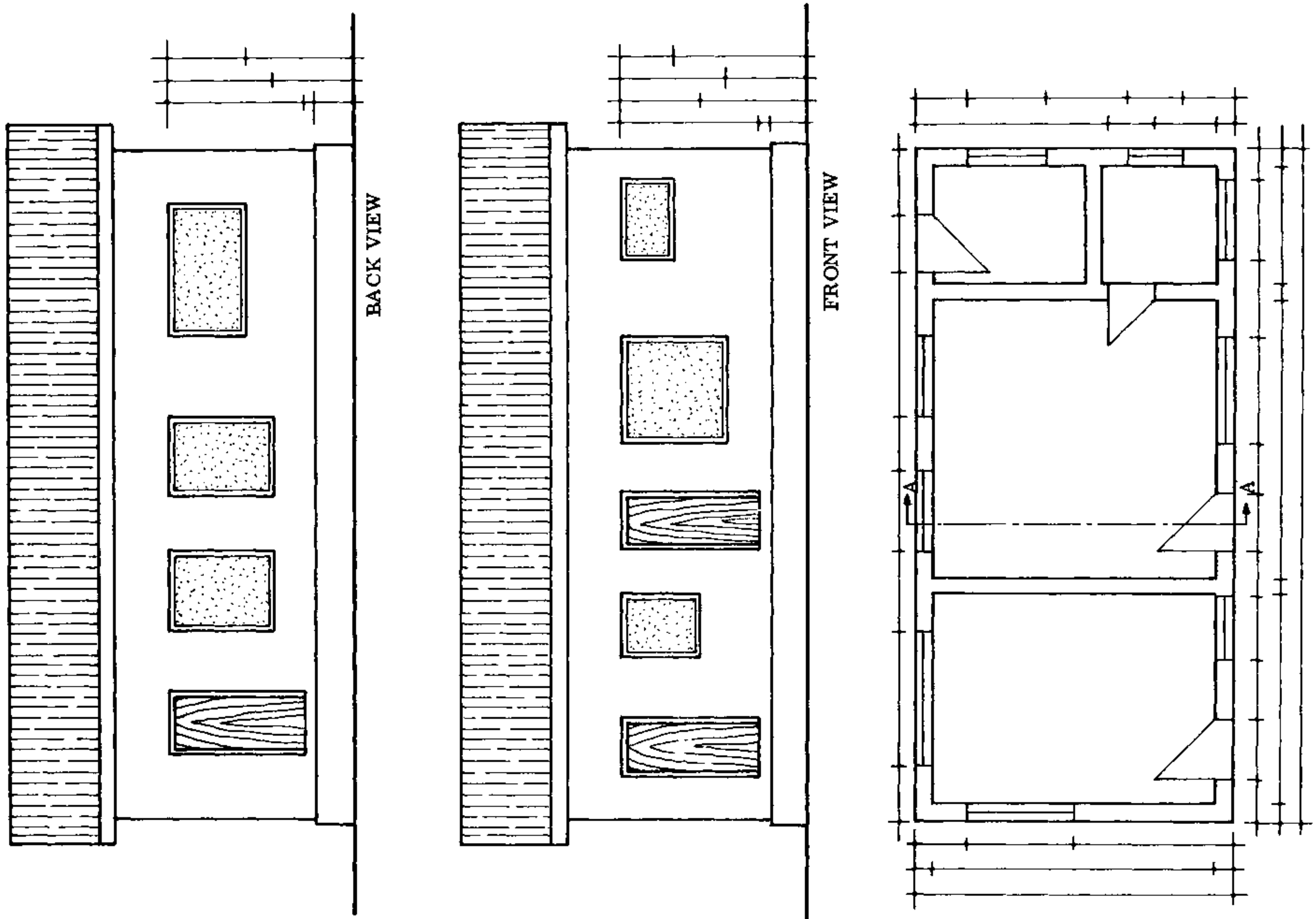

EXERCISE: MAKE AN ORTHOGRAPHIC DRAWING WITH CROSS SECTION OF A BUILDING WITH A GABLE ROOF; USE SCALE 1 : 100 (cm).

N . P . V . C .	
87.	4 1/2 HOURS

TEAR THIS PAGE OUT AND GLUE IT TO PAGE 87

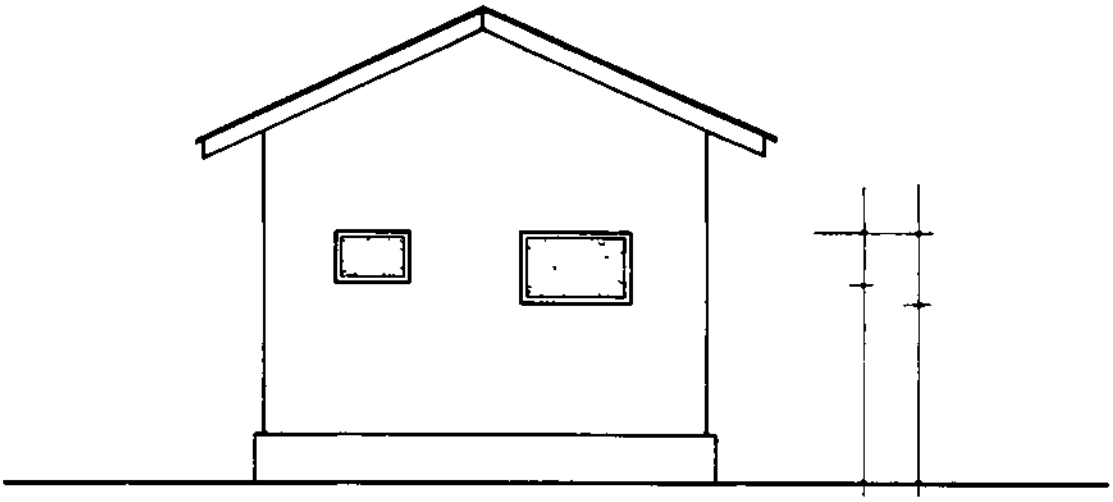

RIGHT SIDE VIEW

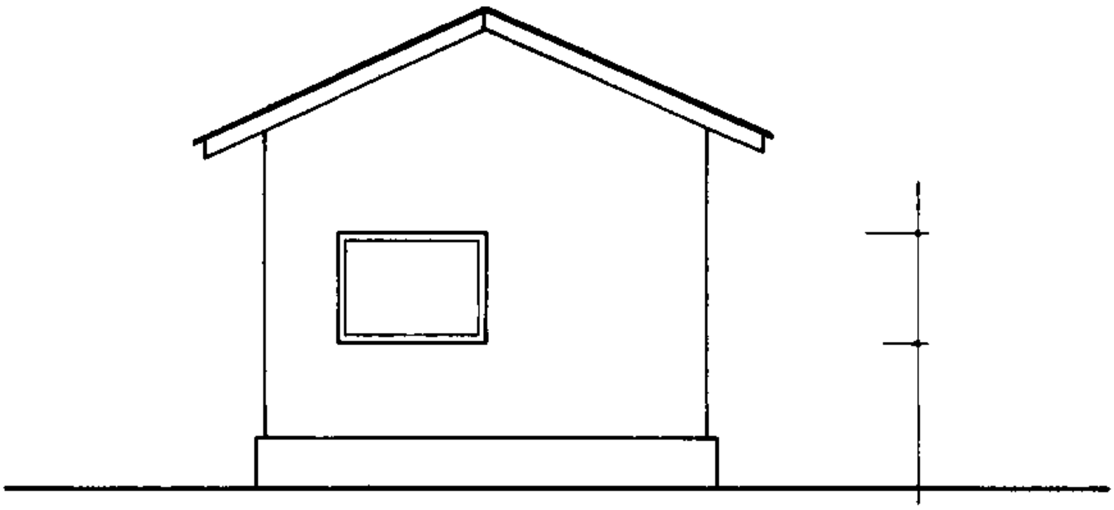

LEFT SIDE VIEW

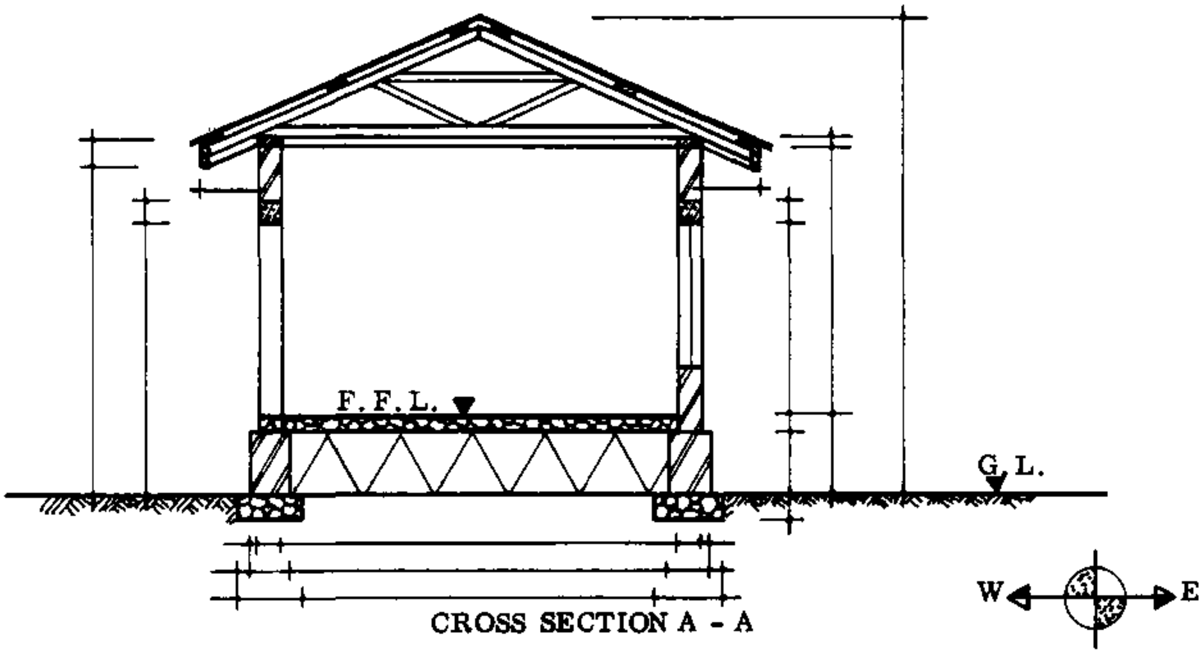

CROSS SECTION A - A

N.P.V.C.
88.

GABLE ROOF AND PARAPETTED GABLE ROOF

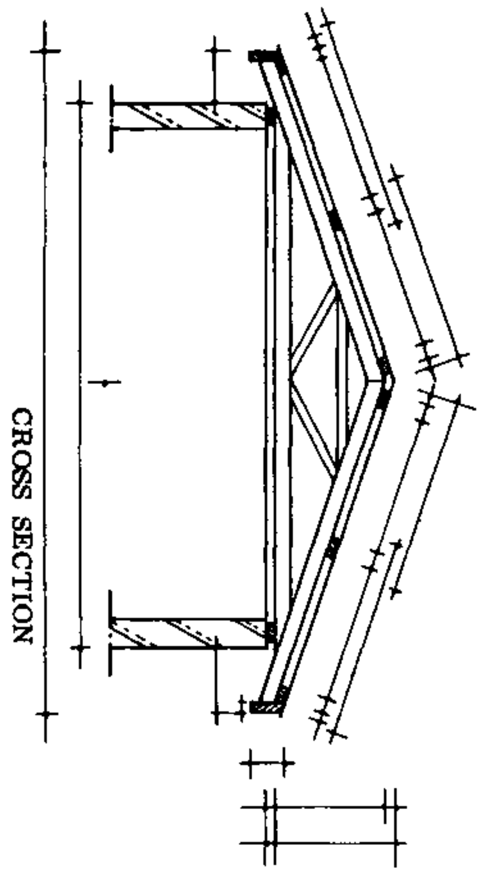

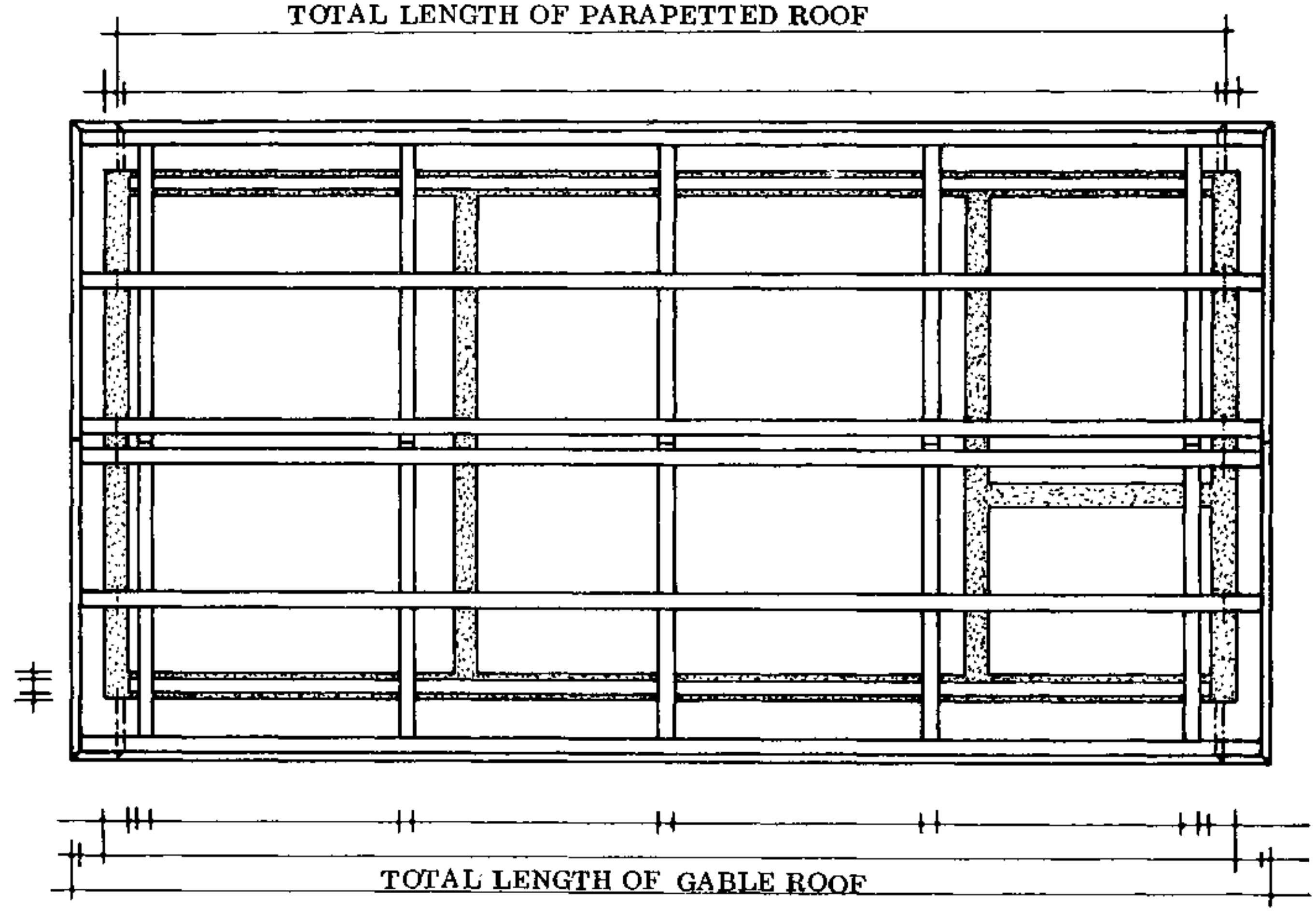

EXERCISE: NAME ALL DIMENSION LINES.
MAKE A DRAWING OF THE ABOVE ROOF DESIGNS.

N . P . V . C.	
89.	3½ HOURS

PLAN FOR HOUSE WITH VERANDAH

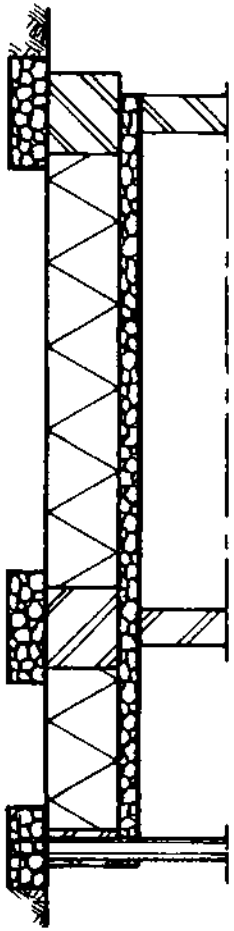

CROSS SECTION A - A

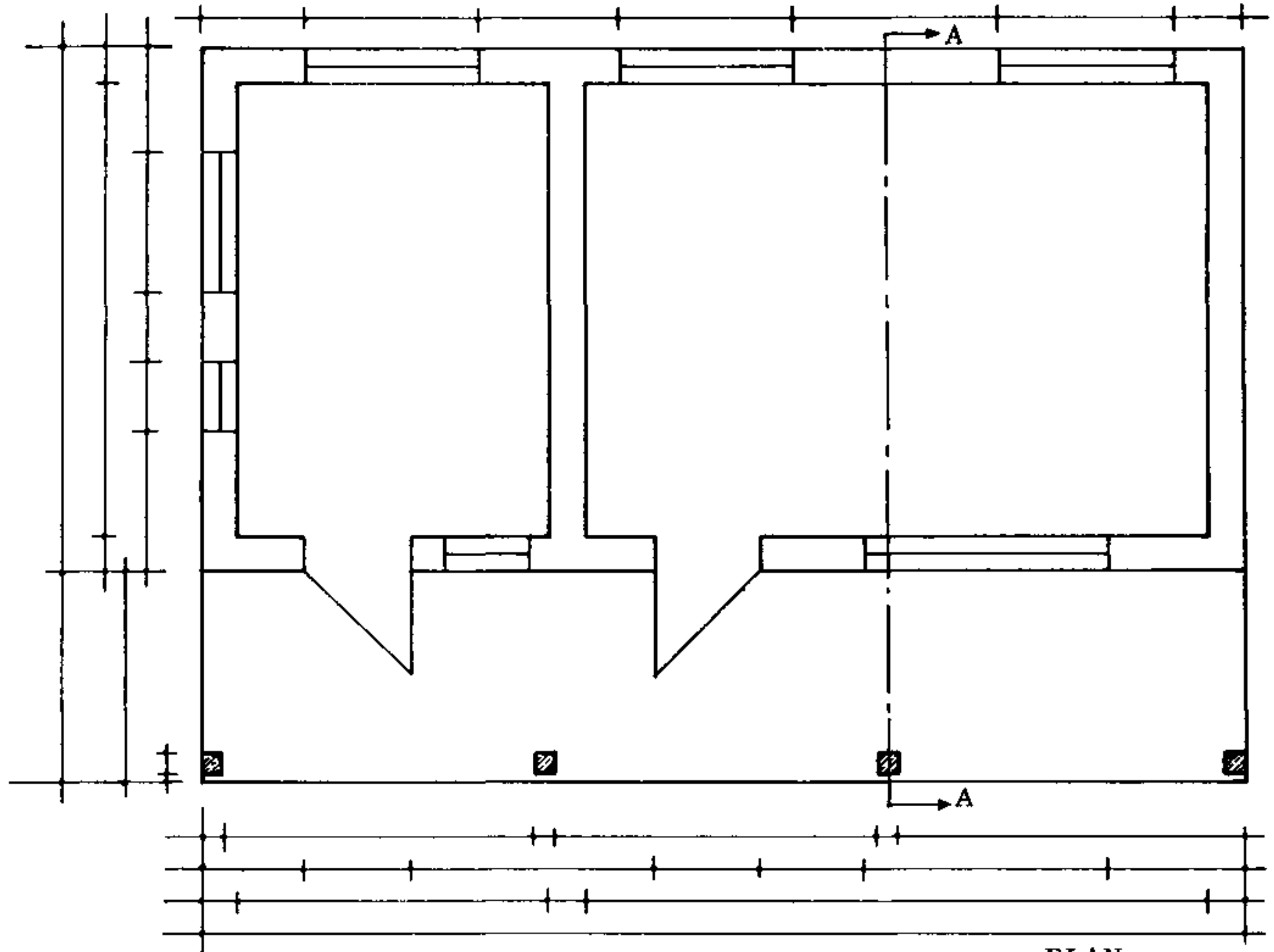

PLAN

EXERCISE: MARK IN ALL DIMENSIONS.
MAKE AN ORTHOGRAPHIC DRAWING OF A BUILDING WITH A VERANDAH;
DRAW PLAN, VIEWS AND CROSS SECTION.
USE SCALE 1 : 100 (cm). BEFORE DRAWING SEE ALSO PAGE 91 and 92.

N . P . V . C .	
1½ HOURS	90.

BUILDING WITH VERANDAH

GABLE ROOF DESIGN

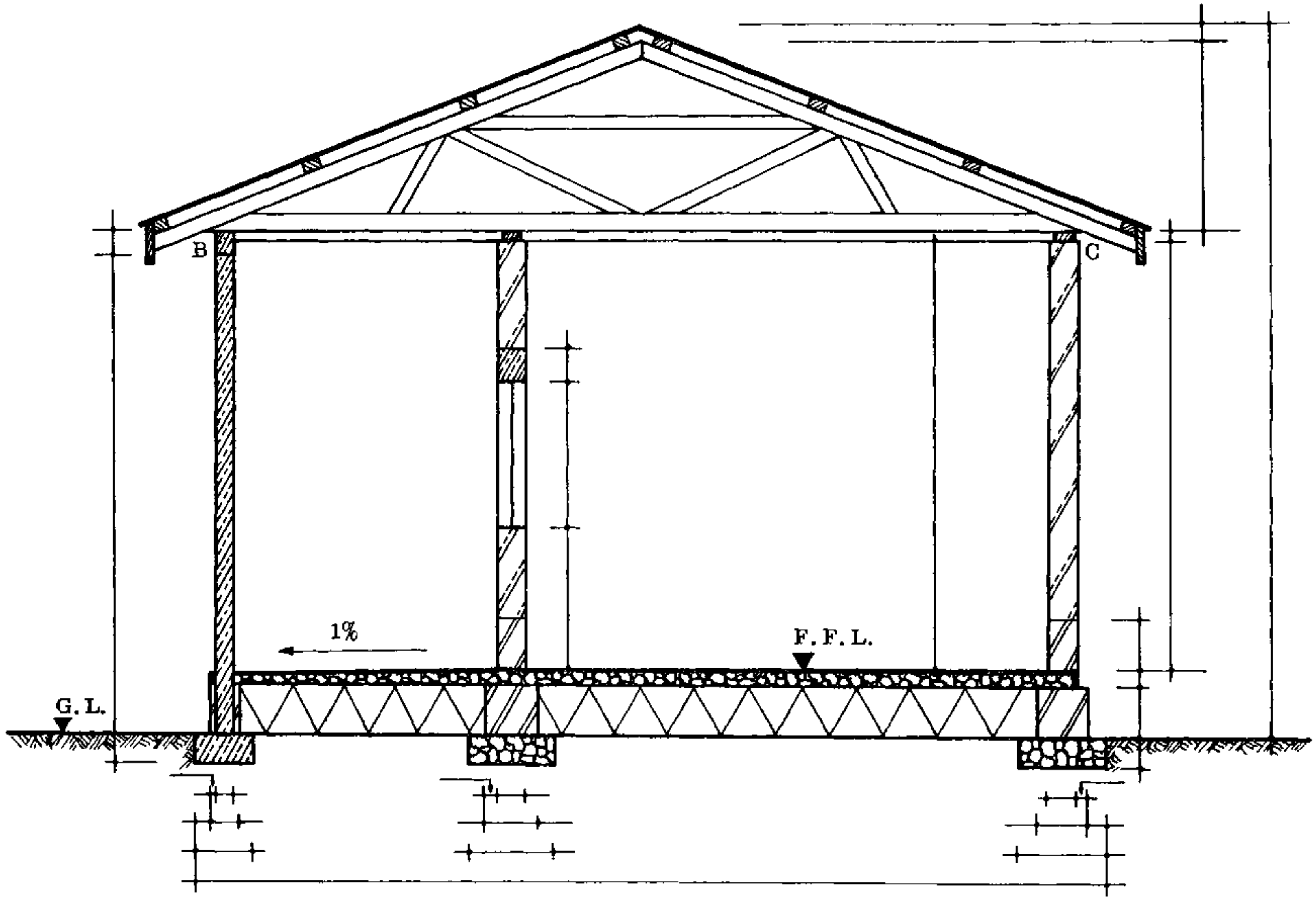

NOTICE: SPAN OF TRUSS GOES FROM OUTSIDE FOOTING TO OUTSIDE WALL (B & C).
SEE ALSO PAGE 90.
COMPARE THIS CROSS SECTION WITH PAGE 92.

BUILDING WITH VERANDAH

GABLE ROOF AND OVERHANG DESIGN

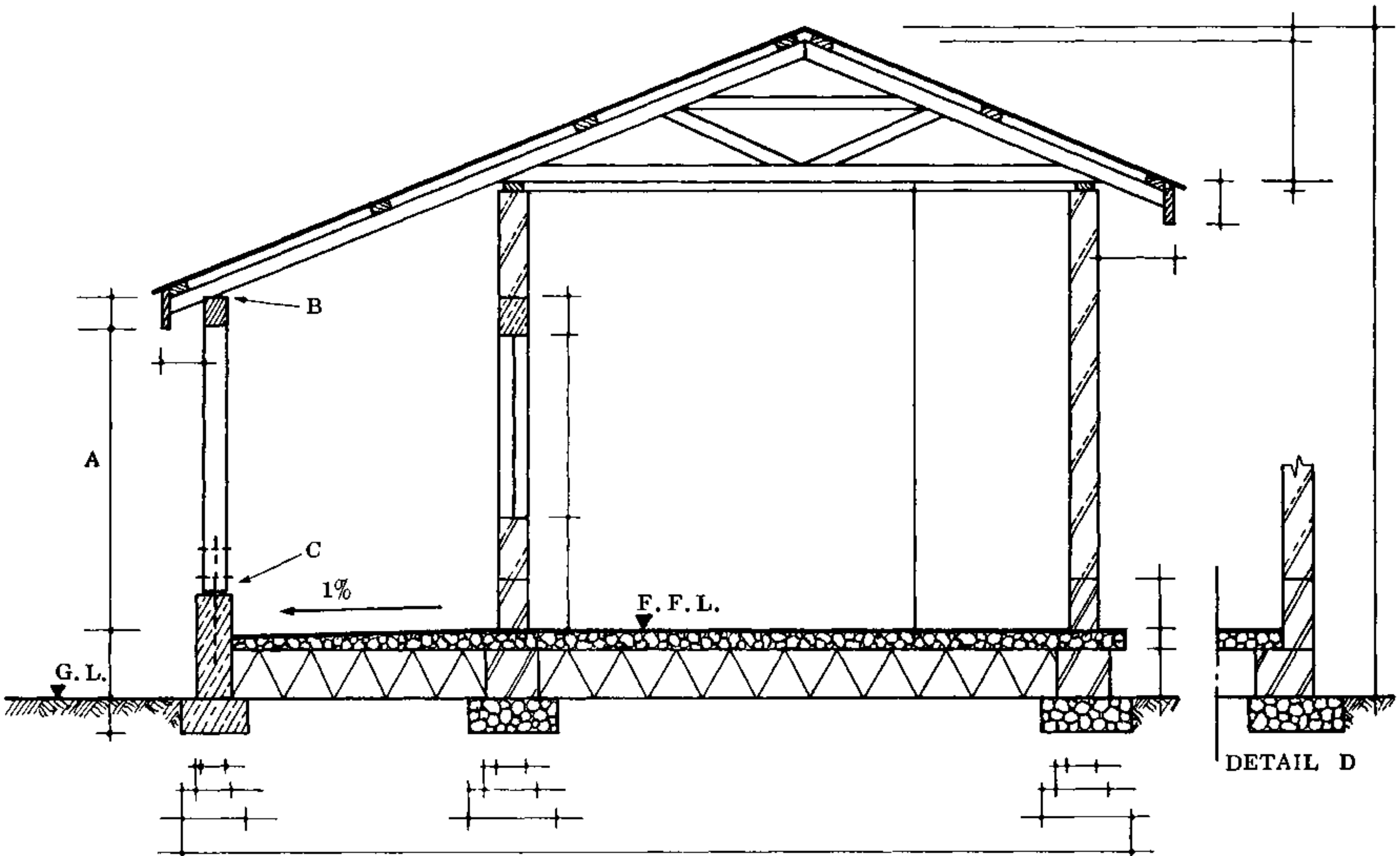

A = HEIGHT IS VERY IMPORTANT

B = NOTICE THE BIRD'S MOUTH

C = WOODEN POST CONSTRUCTION

D = ALTERNATIVE FLOOR CONSTRUCTION

N . P . V . C .

92.

FOUNDATION PLAN

BUILDING WITH VERANDAH

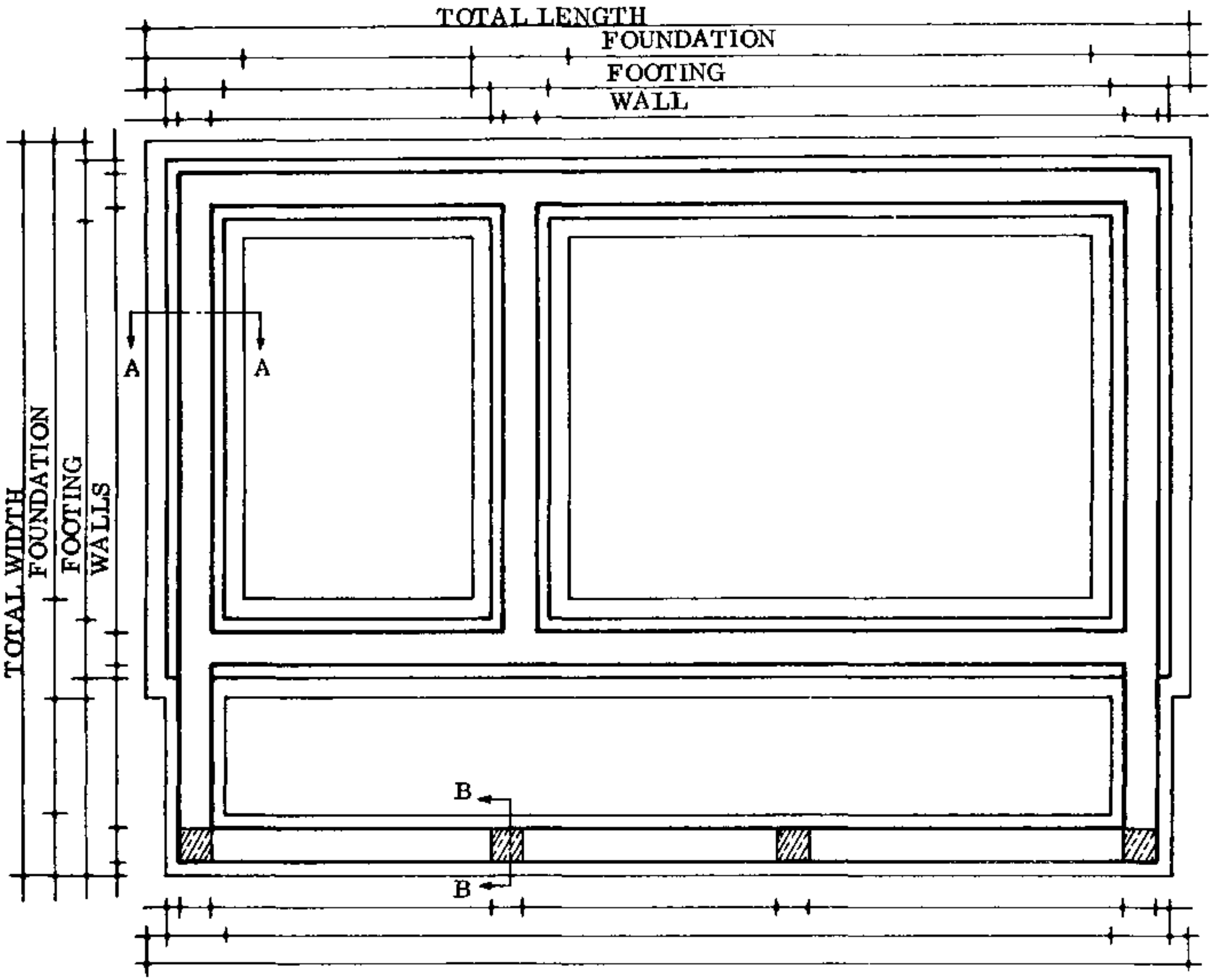

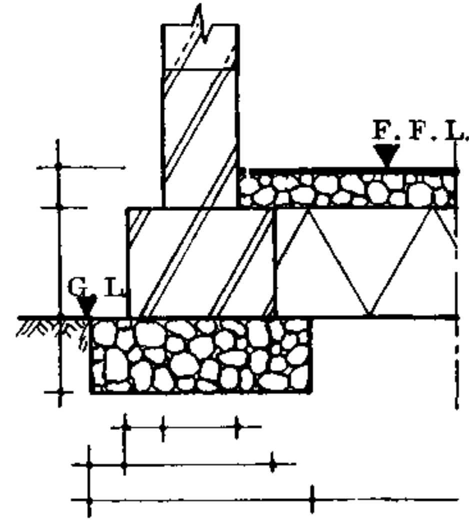

CROSS SECTION A - A

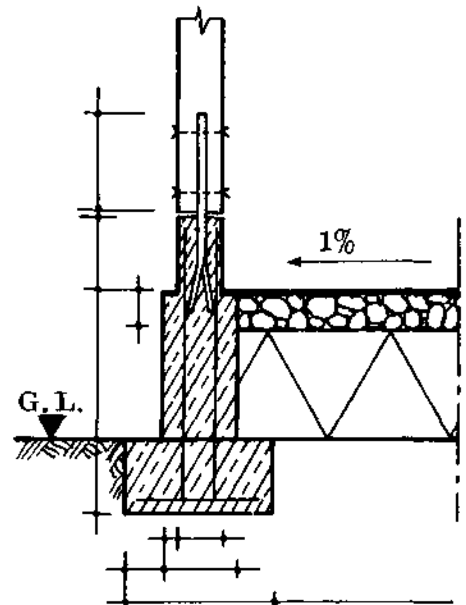

CROSS SECTION B - B

SEE ALSO PAGE 92.

N.P.V.C.	
93.	2 HOURS

GABLE ROOF WITH OVERHANG

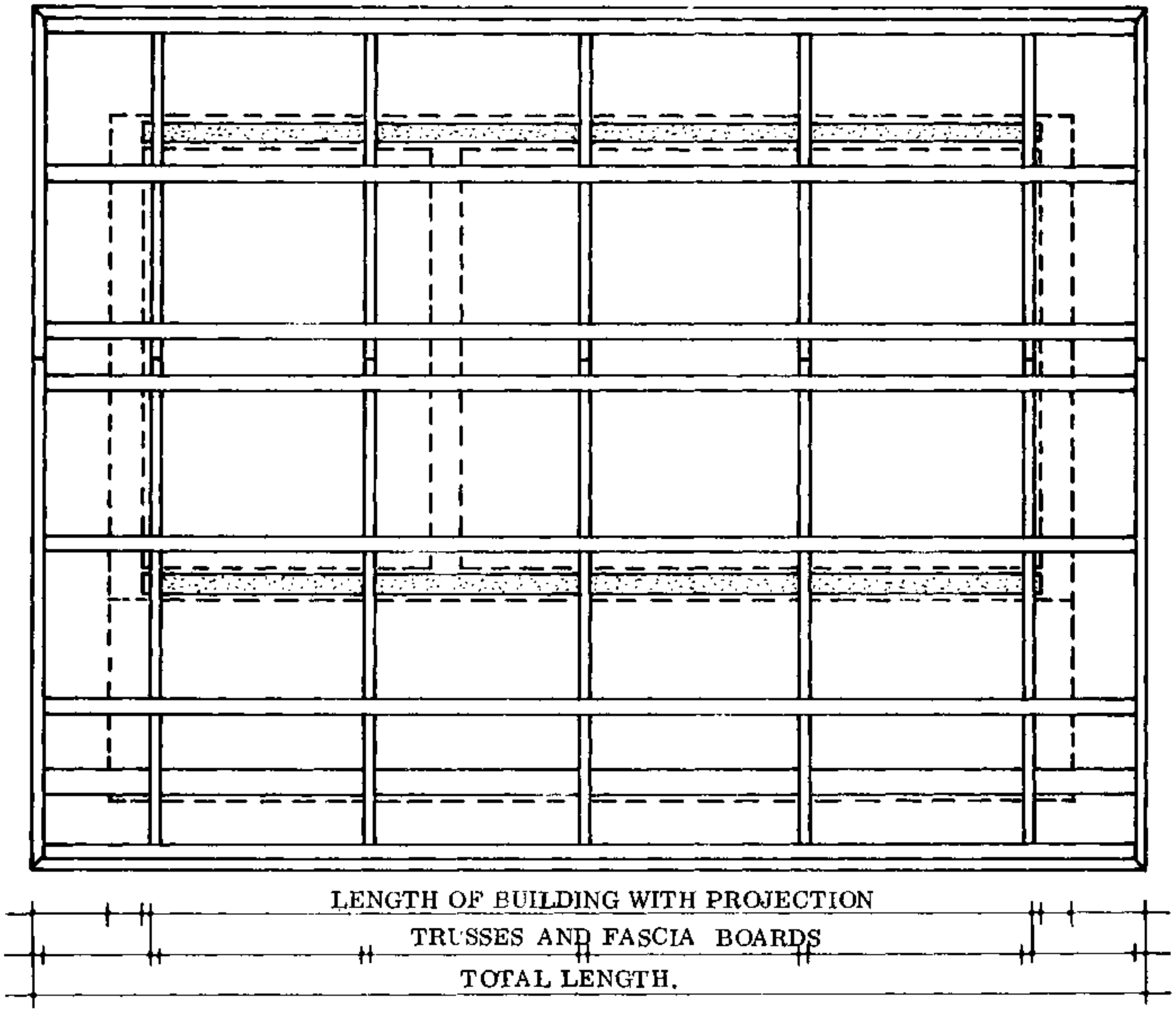

WALL PLATE = DOTTED AREAS.
SEE ALSO PAGE 92.

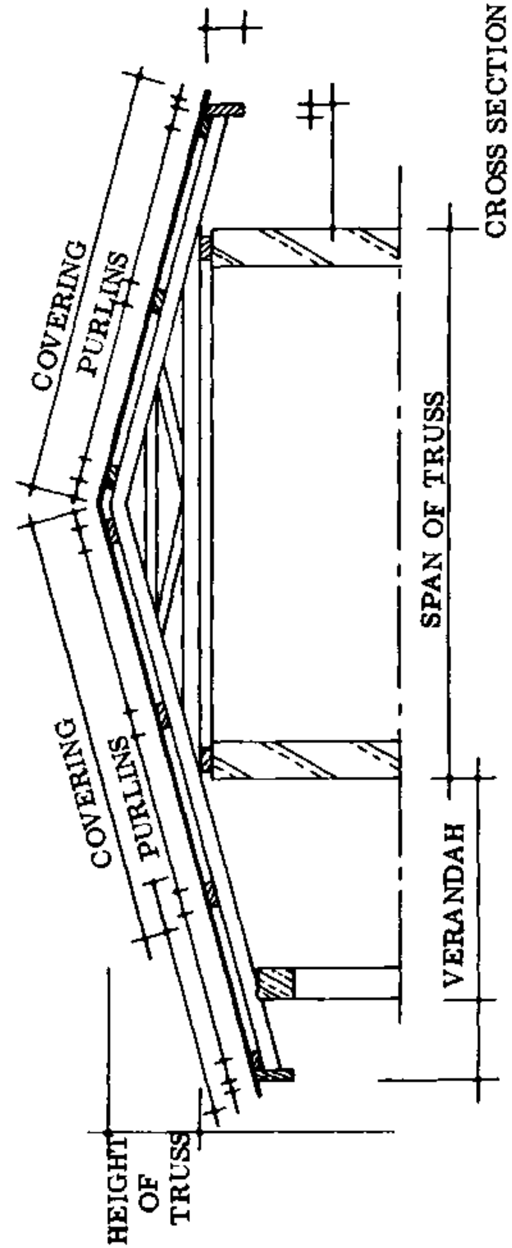

N . P . V . C .	
3½ HOURS	94.

NOTES:

N. P. V. C.
FORM IV 96.

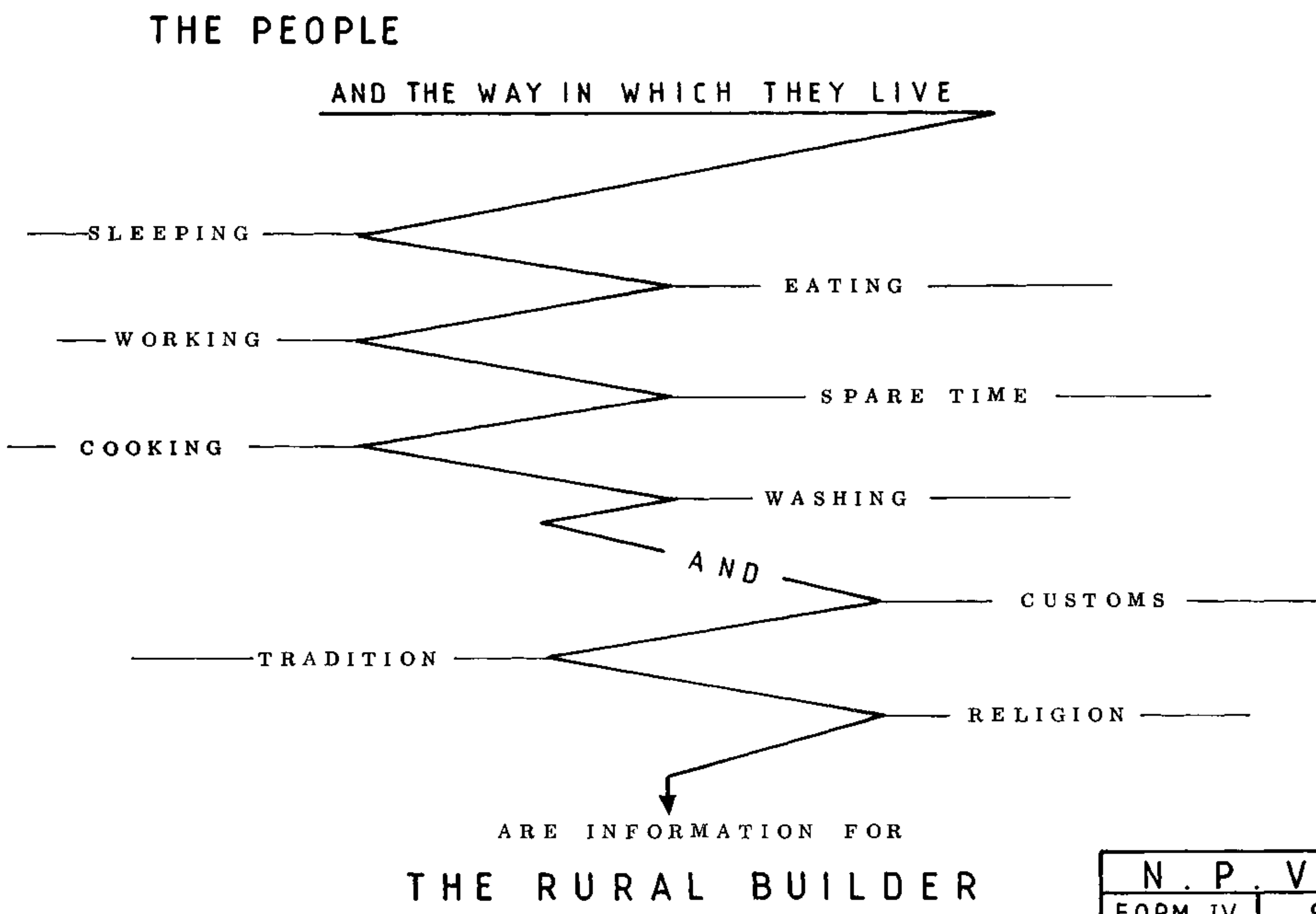

BUILDING DESIGN

You have some general technical information about building. Now you can try to make your own designs, with the aid of the basic outlines on the next pages. Keep in mind all that you know about building, and follow a policy of design:

GENERAL POLICY

Plan for the future in your design. Perhaps it may not be possible to build the entire building at once; it may be completed section by section as funds become available. The building can be planned as a whole, properly constructed piece, and then built up over the years. It is better to design what is actually needed than to design something which is not adequate and have to change it, or even abandon it when it cannot be changed into the desired structure.

Remember that a building is a lasting structure. Try to think ahead and lay out the site and the building with the future requirements in mind. Also keep in mind the points listed on page 96. Think about how people do these daily things and design around their needs.

NOTES:

DESIGN POLICY

- EFFICIENCY: This is so that the whole structure will function as it is meant to do. There should be sufficient room for all the activities and for furniture and whatever equipment is needed. Provide ventilation, privacy, protection against insects, and pay attention to water and sewage problems.
- DURABILITY: The building should withstand the stresses of its own weight, and the outside forces such as wind. It should be as protected as possible against attack from weather, dampness, insects, and the normal wear and tear of use. Keep in mind the climate and its influences, and choose your materials with some thought to their durability.
- ECONOMY: Design and erect buildings economically. Plan ahead and have the materials ready to go through with whatever section has been planned. Knowledge about materials, their quality and durability prevents much waste.
- FINISH: Finish the whole as attractively as possible. Finishes not only improve appearance, but they are usually preservatives as well. Appropriate colours make the building pleasant as well as cooler.

NOTES:

LOCATION PLAN

The illustration on the right page shows a piece of land as it looks from the ground, and how it would look if you were above it in an aeroplane looking down. The view you would see from the plane resembles the plan.

A plan tells you all the things which are on the site such as buildings, trees, roads, streams, bridges; and where all of these are located. The plan also shows the orientation of all these features with respect to directions: north, south, east and west; and how the surface of the ground slopes.

It is impossible to properly plan a building without a great deal of knowledge about the land on which it is to be built. The plan is essential to help the builder to design a building which will fit into the surroundings in the most economical and convenient way.

If a building is planned without taking into account the basic information contained in the location plan, it may turn out to be the wrong shape to fit the site. It may be more costly to build because it is not placed correctly along the "contours" of the land. It may be uncomfortable to live in if it is facing into the hot afternoon sun. It may be hard to reach if there is not a good entrance way from the road.

The following pages contain some information about the factors which need to be considered about the site when you are planning a building. These include the measurements of the site and plot, the building regulations and restrictions, the direction of the breeze and of storms, the slope of the site, the direction of the sun's rays at different times of day: all of these need to be considered when planning so that the building will be comfortable to live in and economical to build.

IF YOU LOOK DOWN FROM AN AEROPLANE:

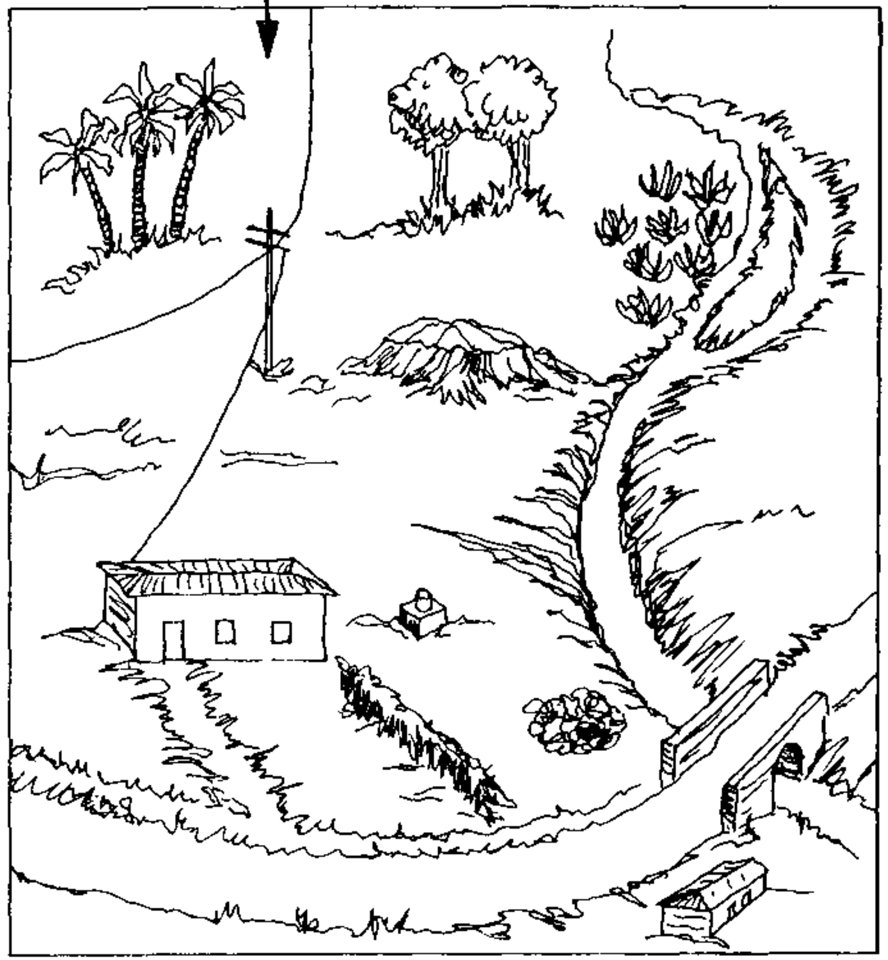

PICTORIAL VIEW

YOU WOULD SEE ONLY THE ROOFS OF THE BUILDINGS AND THE TOPS OF THE TREES, SO THE VIEW YOU WOULD SEE IS LIKE THIS:

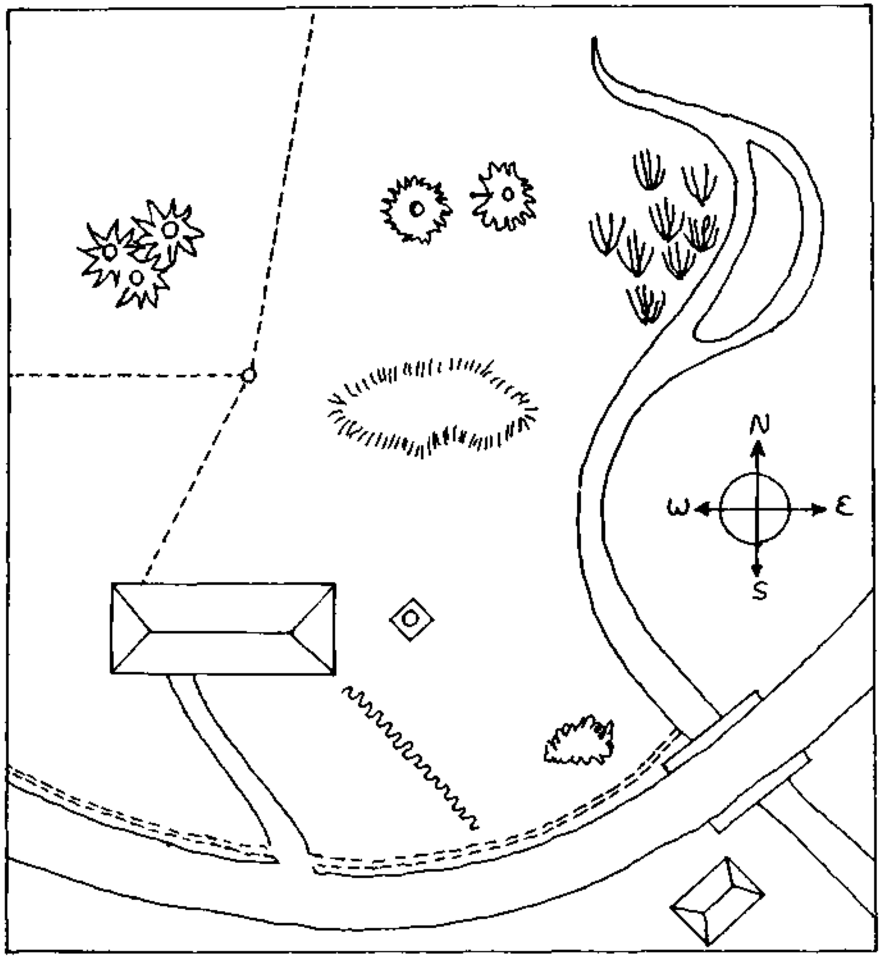

THIS VIEW IS A PLAN OF THE LAND AND MAY BE CALLED A MAP OR SURVEY PLAN.

BOUNDARY LINE

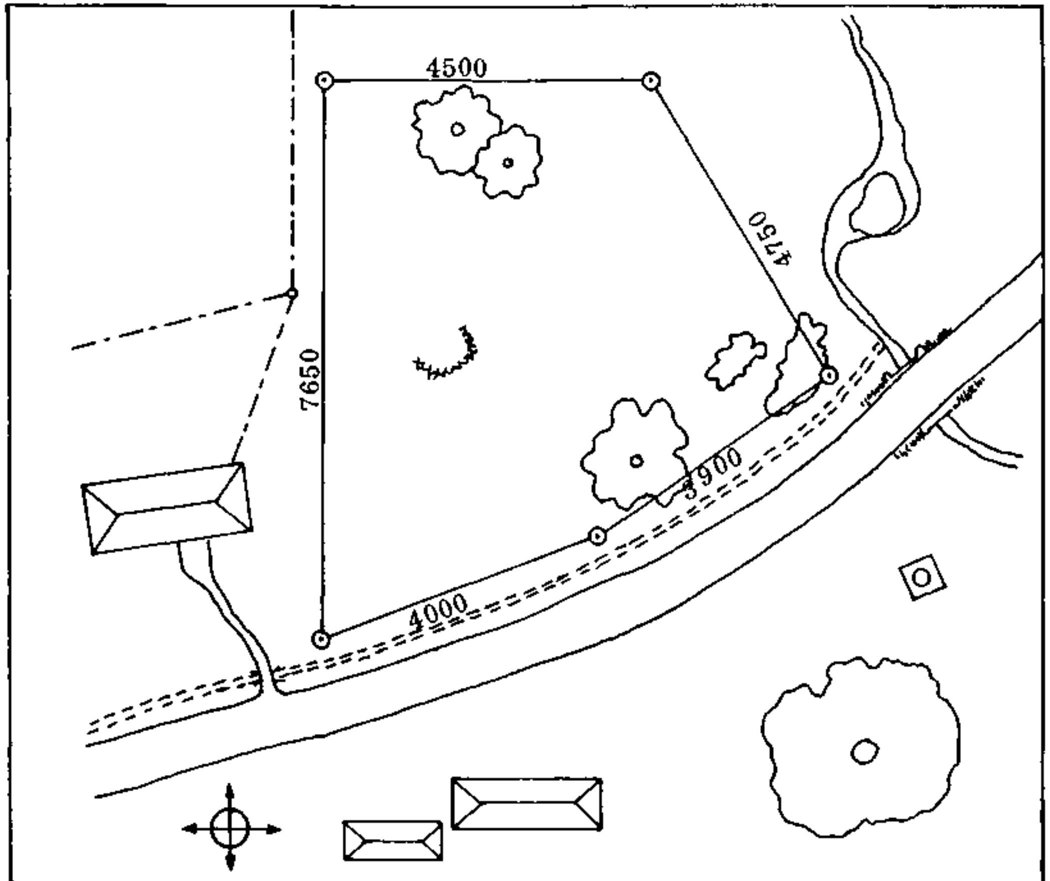

SCALE : 1 : 1000 (cm) PLAN No 145 - B

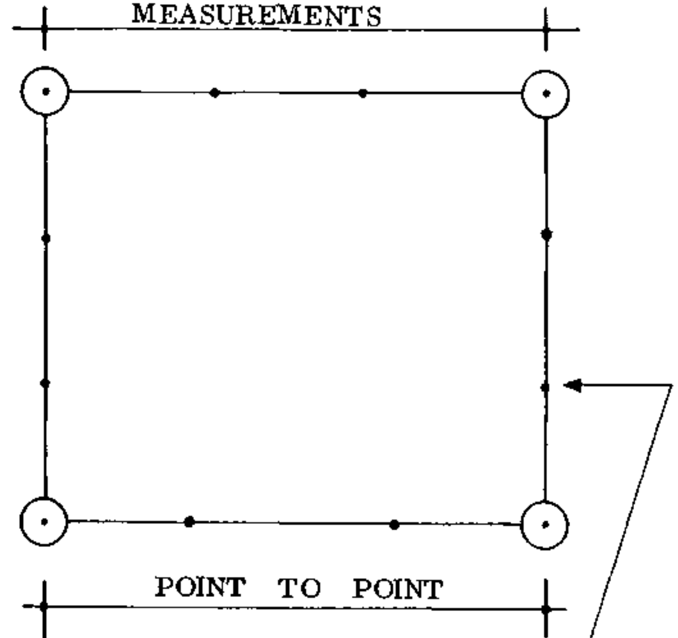

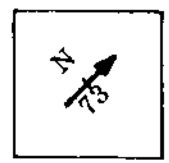

"BOUNDARY STONE". THE ARROW IS FACING THE NORTH. THE NEXT STONE IS 73 METRES AWAY.

SITE PLANS HAVE THE LENGTHS WRITTEN ALONG THE BOUNDARIES SO THAT THE EXACT LOCATION OF THE PLOT IS KNOWN.

N.P.V.C.	
101.	

BUILDING LINE

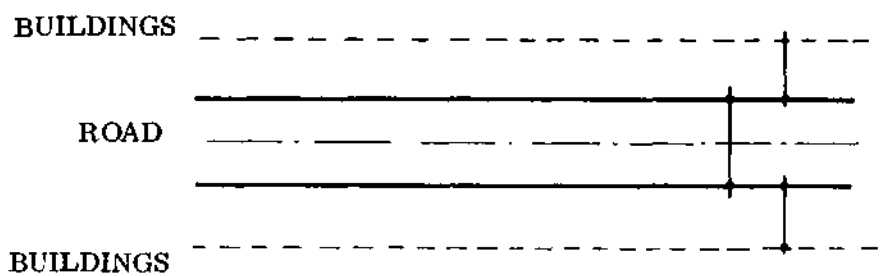

IN PLANNED TOWNS NO BUILDING IS ALLOWED TO REACH TO THE EDGE OF THE ROAD: A BUILDING HAS TO BE A CERTAIN DISTANCE AWAY FROM THE ROAD TO ALLOW FOR FUTURE ROAD WIDENING AND SO THAT THERE IS ENOUGH SPACE BETWEEN BUILDINGS.

SITE COVERAGE

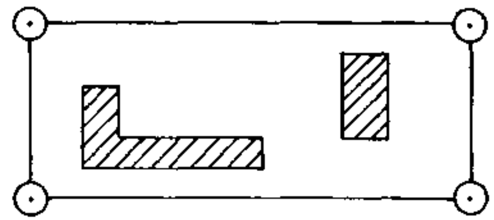

IN SOME TOWNS THERE ARE RULES ABOUT HOW MUCH LAND CAN BE BUILT OVER: FOR SO MANY SQUARE METRES OF LAND, THE BUILDINGS CAN TAKE UP ONLY A CERTAIN AMOUNT OF THE SPACE. IN ADDITION, THE BUILDINGS USUALLY HAVE TO BE A CERTAIN DISTANCE AWAY FROM THE PLOT BOUNDARIES. THIS IS TO MAKE SURE THAT THE BUILDINGS WILL HAVE PLENTY OF LIGHT AND AIR SO THEY ARE HEALTHY TO LIVE IN.

BREEZE

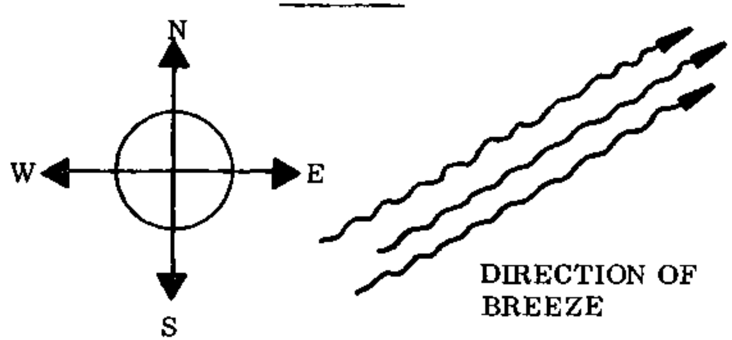

IN HOT WET CLIMATES, IT IS IMPORTANT TO HAVE A BREEZE BLOWING THROUGH THE BUILDING SO THAT THE PEOPLE INSIDE ARE COOLER.

THE DIRECTION OF THE PREVAILING BREEZE (THE USUAL DIRECTION THE BREEZE COMES FROM) IS MARKED ON THE PLANS.

STORMS

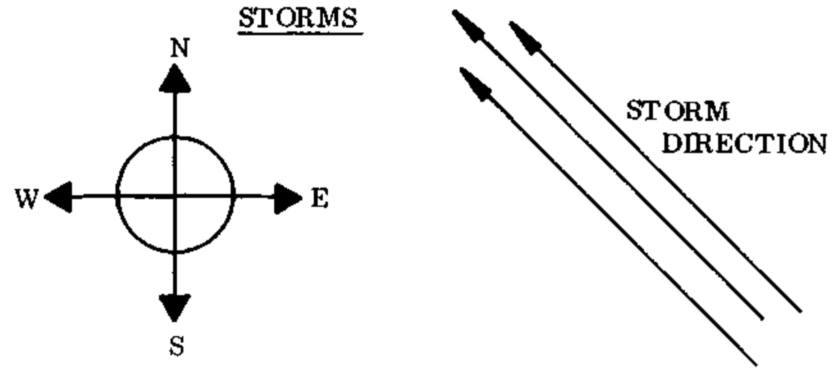

IN AREAS WHICH GET BAD STORMS, THE RURAL BUILDER WILL PLAN THE BUILDING SO THAT THE OPENINGS WHICH FACE THE STORM ARE PROTECTED.

BUILDING ALONG THE CONTOURS

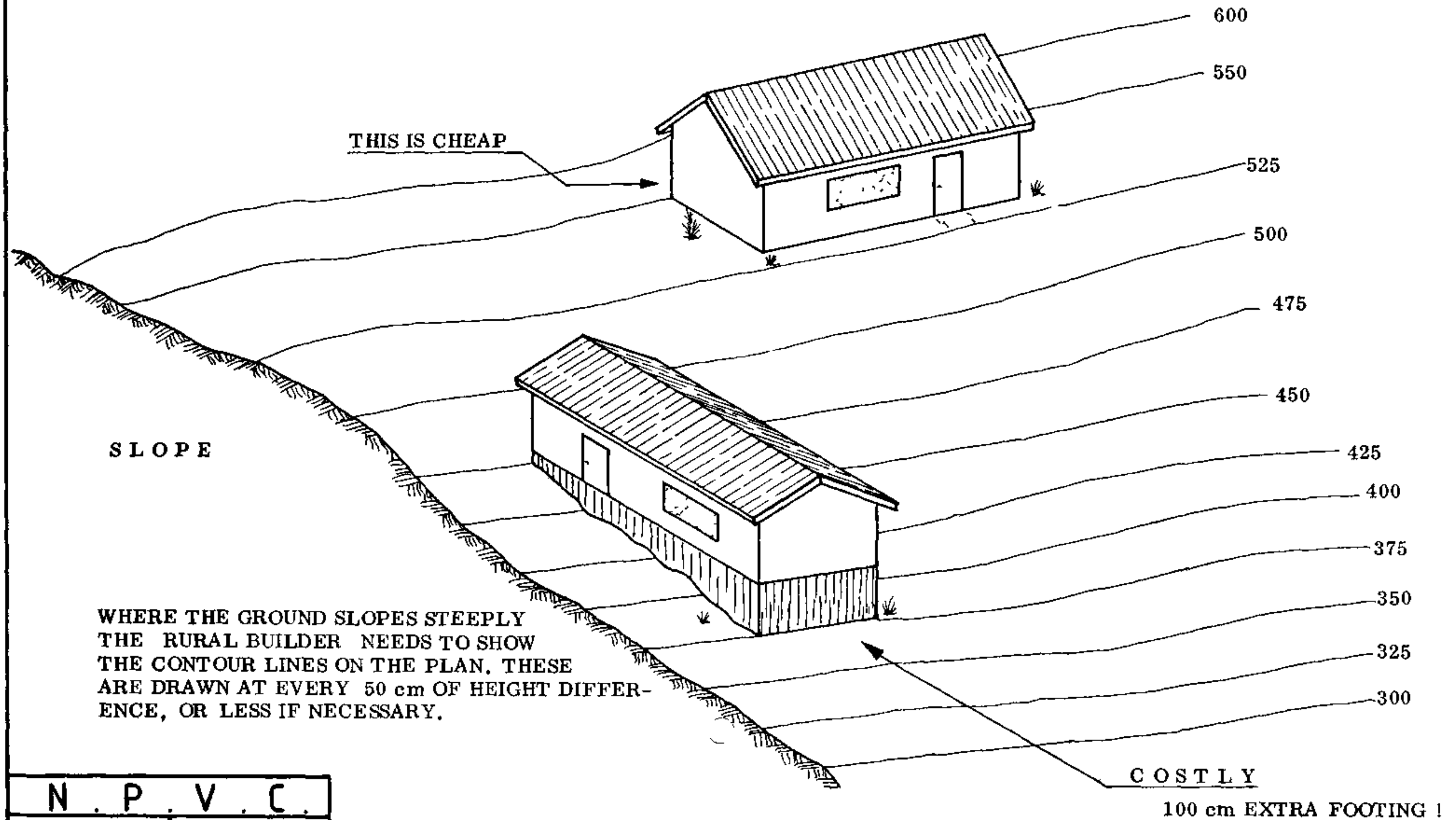

WHERE THE GROUND SLOPES STEEPLY THE RURAL BUILDER NEEDS TO SHOW THE CONTOUR LINES ON THE PLAN. THESE ARE DRAWN AT EVERY 50 cm OF HEIGHT DIFFERENCE, OR LESS IF NECESSARY.

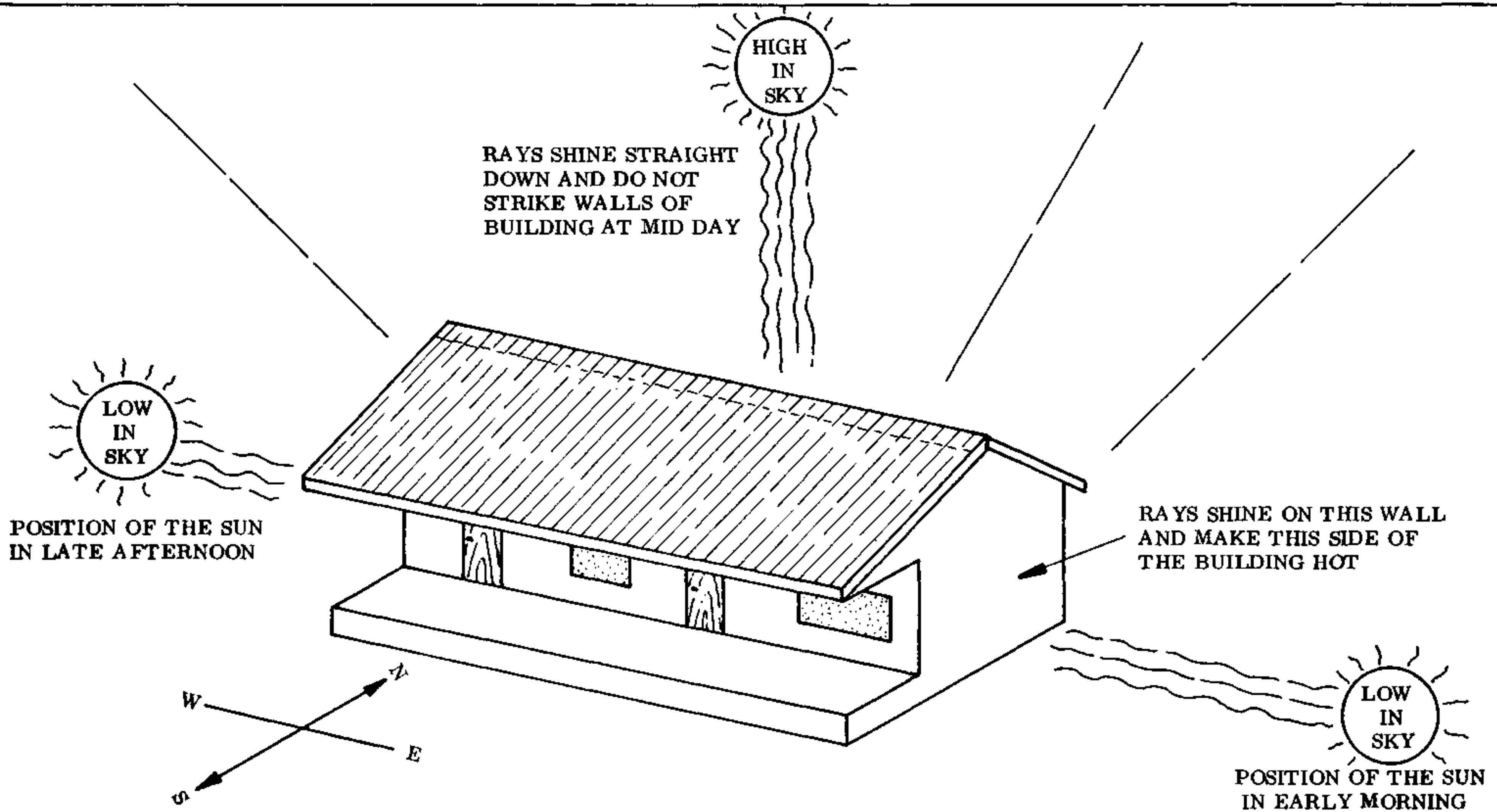

BUILDINGS WHICH HAVE THE LONG SIDES FACING NORTH AND SOUTH AND HAVE A VERANDAH ARE COOLEST AND MOST COMFORTABLE IN HOT COUNTRIES BECAUSE THE SUN SHINES ON THE SHORT SIDES ONLY.

N.P.V.C. 104.

DESIGNING BUILDINGS TO WITHSTAND STRONG WINDS

Many buildings are not strong enough to resist the forces of very strong winds. They may be destroyed and the people inside can be injured or even killed. The guidelines here aim to help the Rural Builder to design and construct buildings so that such occurrences are reduced in the future. The point of these guidelines is to reduce the force of the wind against the building, and to make the building more resistant to wind forces. The following points are illustrated on the right.

A - Take advantage of natural windbreaks such as trees or hedges when deciding on the site for the building. Such a location can reduce the force of the wind.

B Sites on hills and near hilltops can have much higher windspeeds.

C - Valleys can funnel winds and create higher windspeeds.

D - The pitch of the roof is very important. This should be between 15 and 20 degrees.

E - A hip roof resists wind forces better than a gable roof.

F - Avoid making large overhangs, even if they are supported by columns. Locate verandahs away from the direction of the strongest winds.

G - A parapet around the roof helps to reduce the wind force along the roof edges.

H - Avoid making large openings such as doors or windows near the roof line or near the corners of walls. These tend to weaken the structure if they are located where the loads are greatest.

I - Make sure that every part of the building is secured: the roof parts to each other, the roof itself to the walls, the walls to the other walls, the walls to the floors, the floor to the foundations. The foundations should rest on firm soil if possible.

- REMEMBER: Whatever the form of roof construction, the parts of the roof must be securely tied together. Anchor the whole structure to the building. Ignoring this precaution means that the roof will almost certainly be damaged in any strong wind.

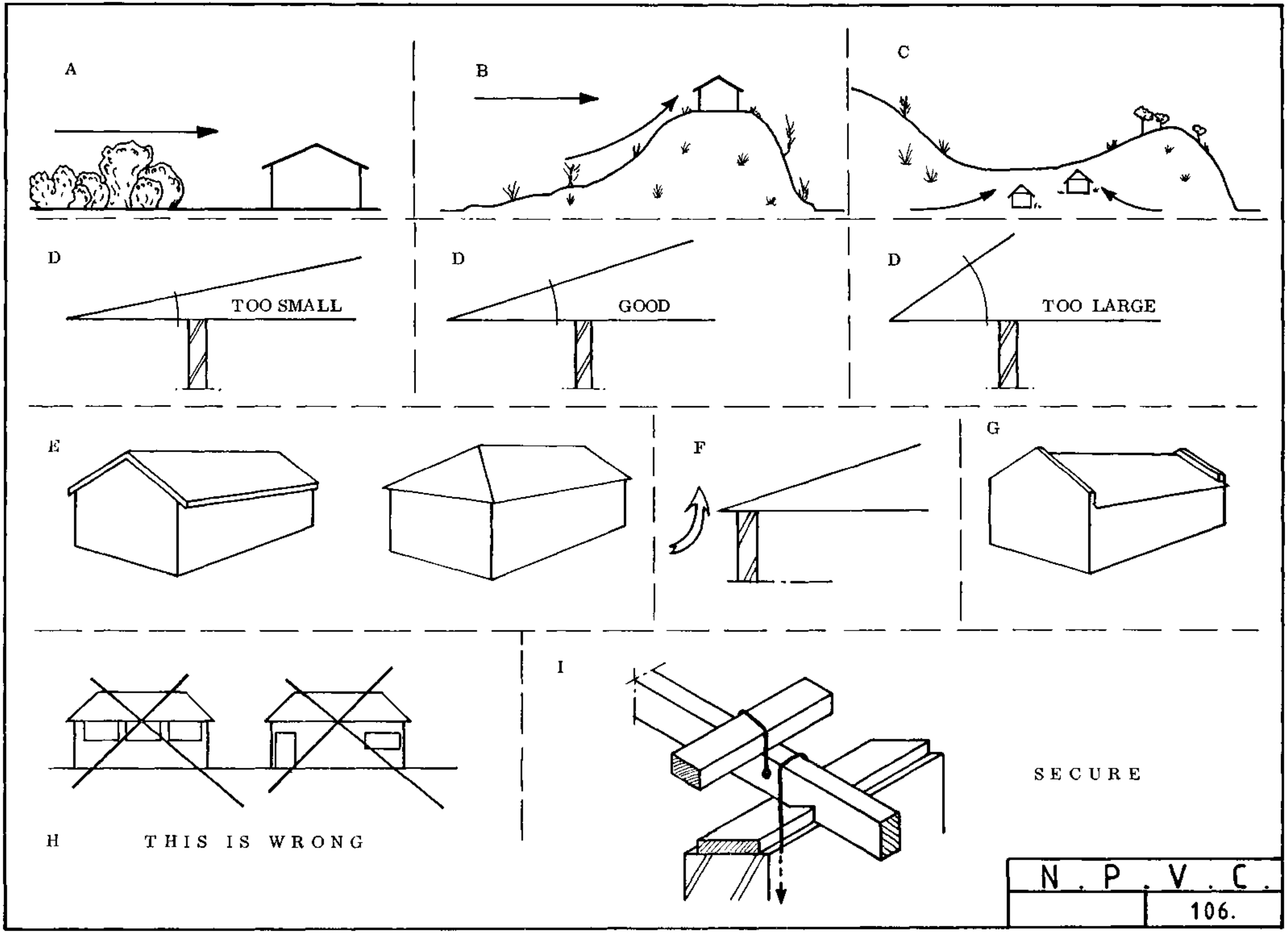
A
B
C
D
TOO SMALL
D
GOOD
D
TOO LARGE
E
F
G
H
THIS IS WRONG
I
SECURE
N.P.V.C.
106.

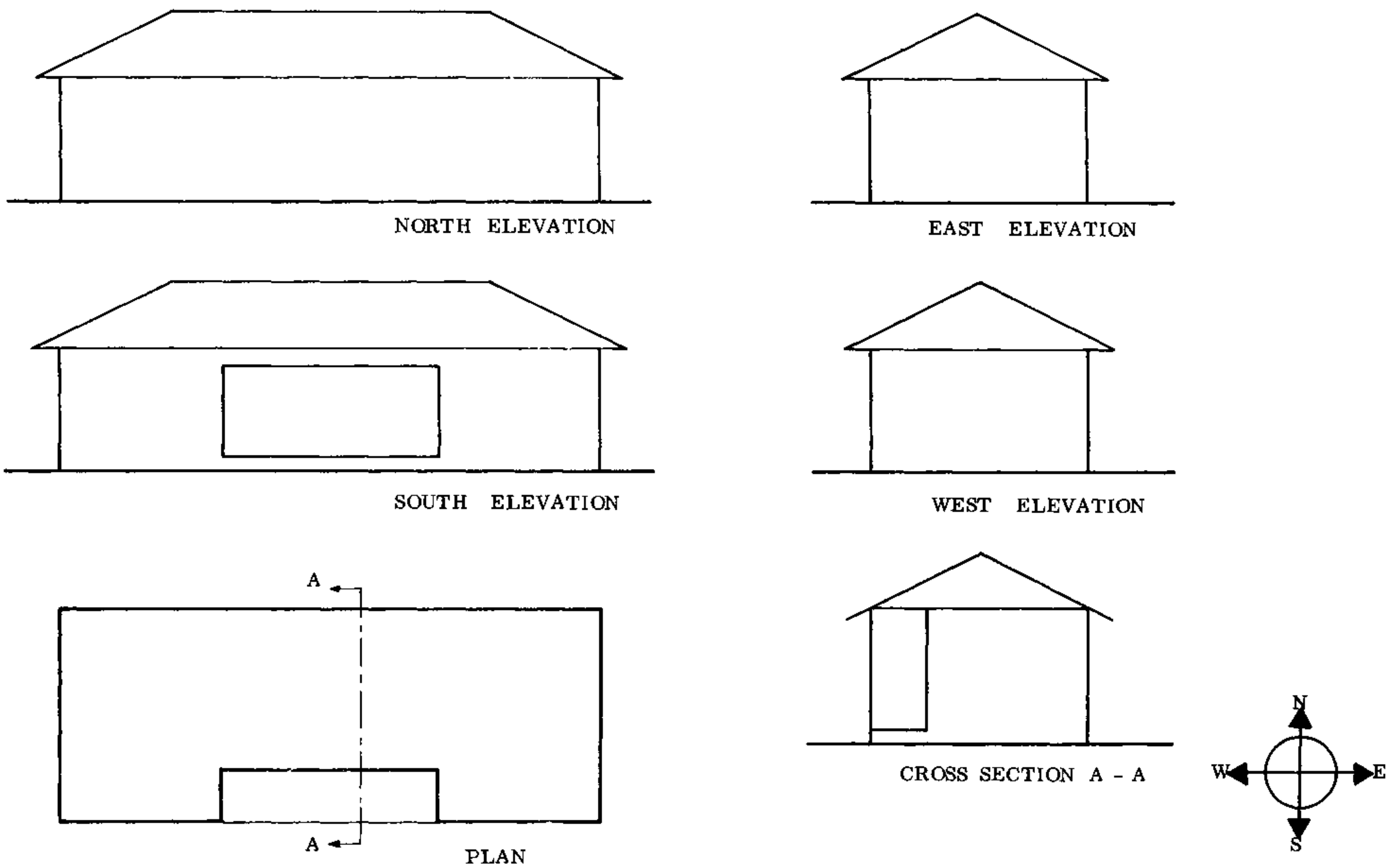

BASIC OUTLINE OF BUILDING UNIT WITH ENCLOSED VERANDAH

N . P . V . C .	
107.	

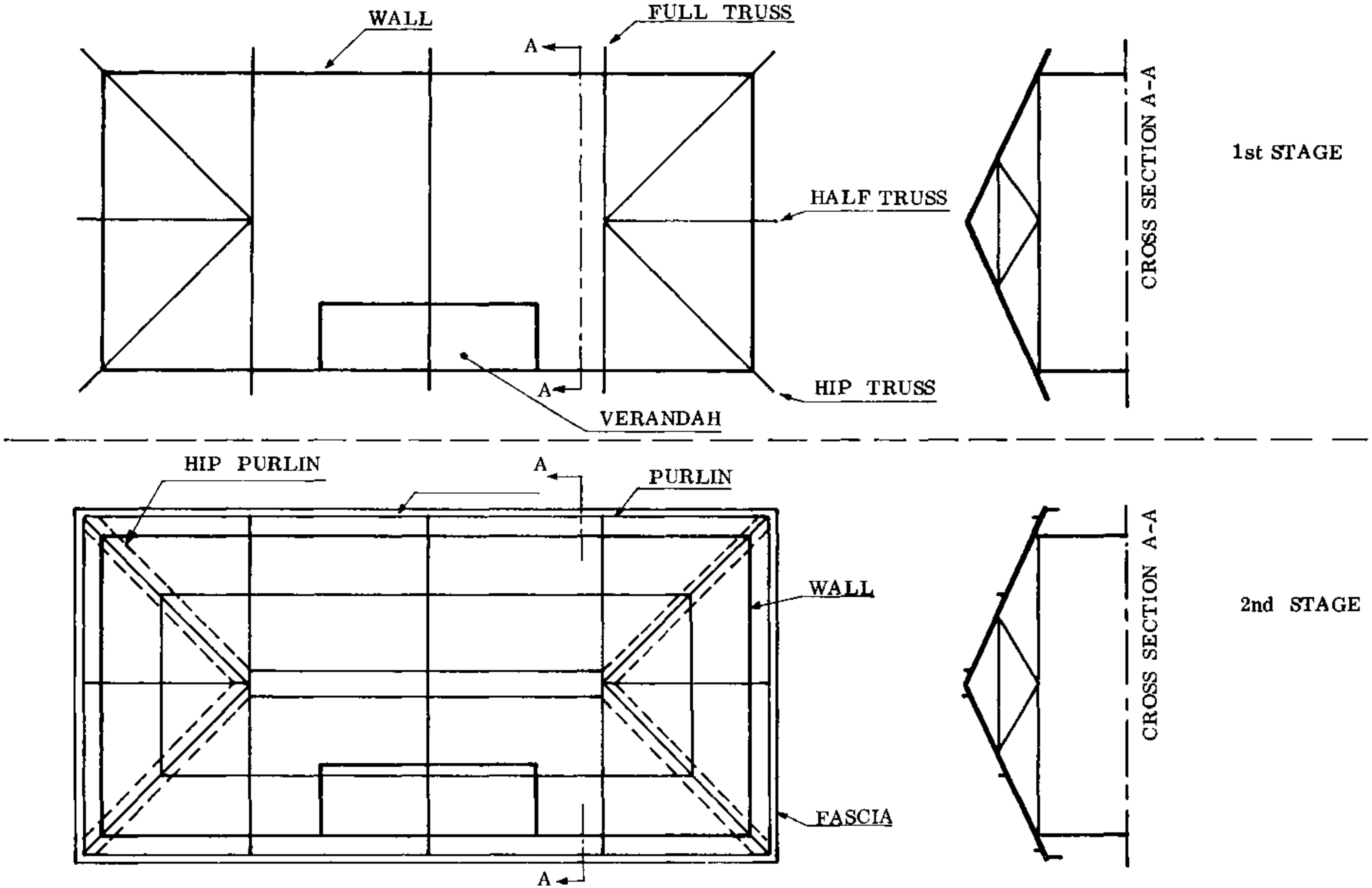

BASIC OUTLINE FOR HIP ROOF CONSTRUCTION

N.P.V.C.

108.

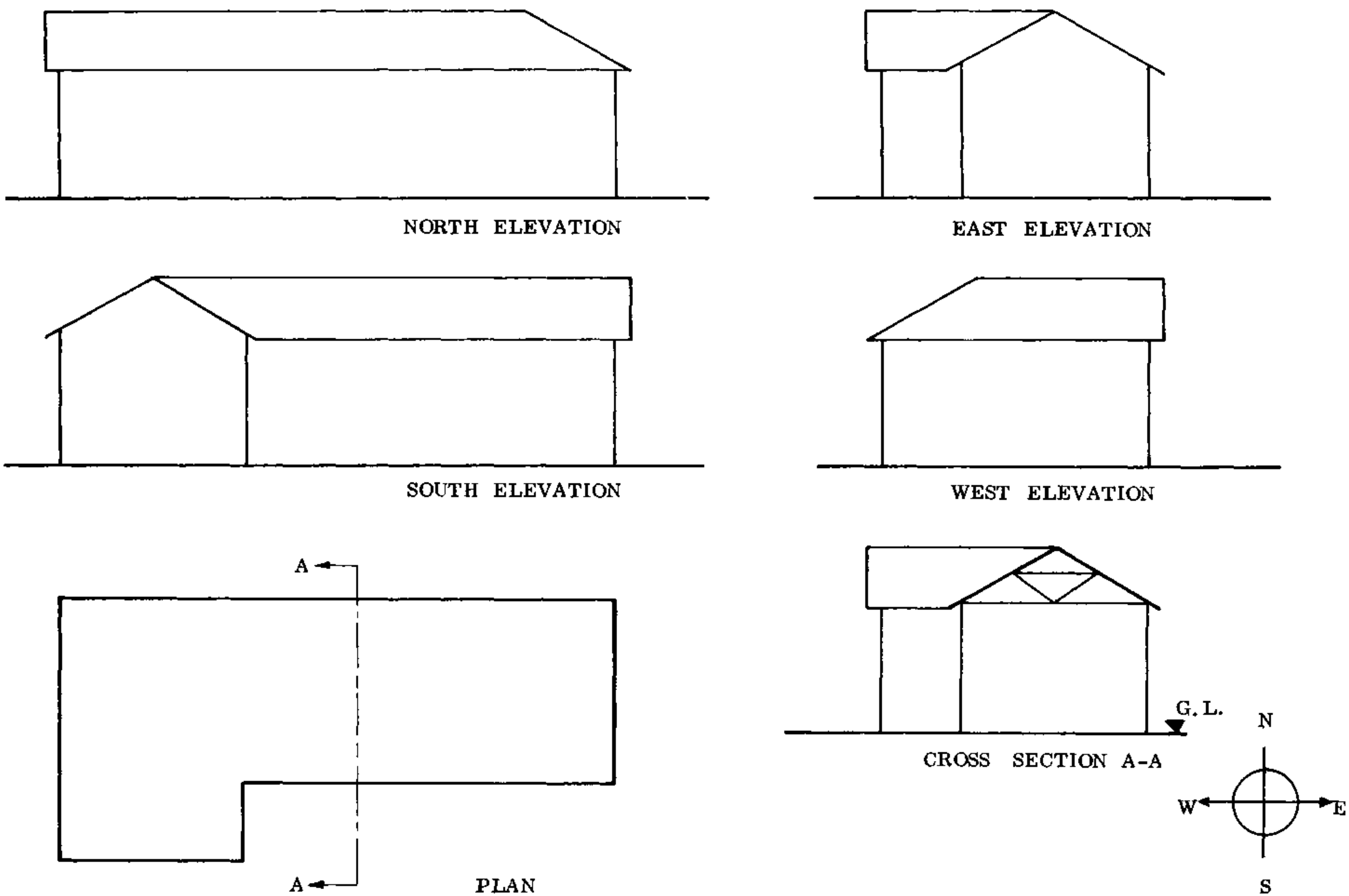

BASIC OUTLINE "L" SHAPED BUILDING UNIT

N . P . V . C .	
109.	

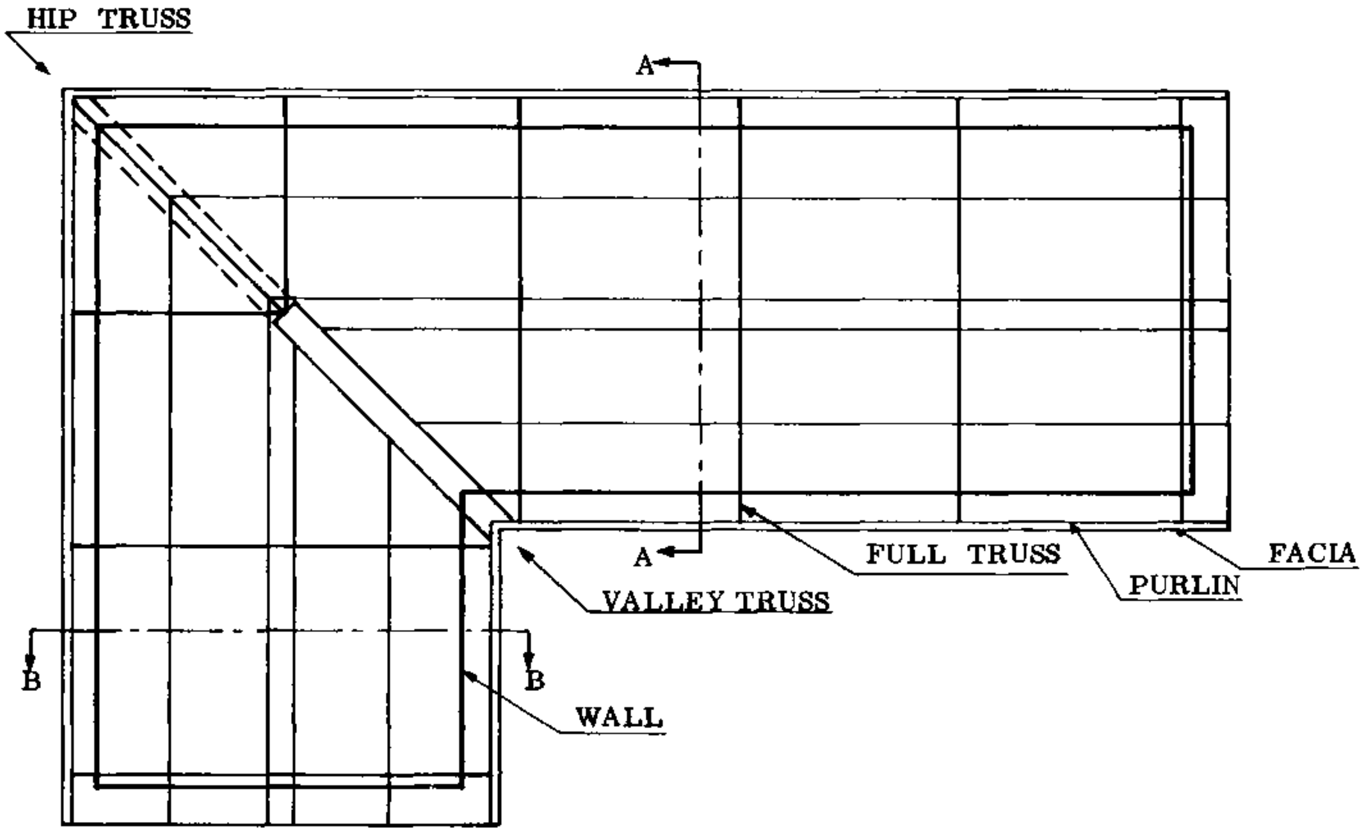

PLAN

HIP & VALLEY ROOF CONSTRUCTION

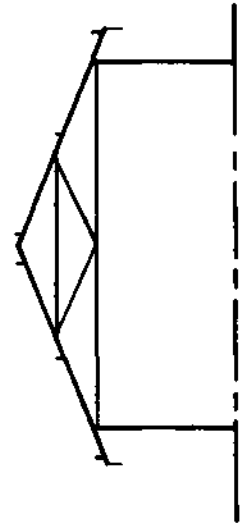

CROSS SECTION A - A

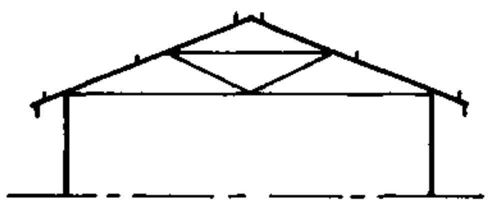

CROSS SECTION B - B

BASIC OUTLINE " L " SHAPED ROOF CONSTRUCTION

N . P . V . C .	
	110.

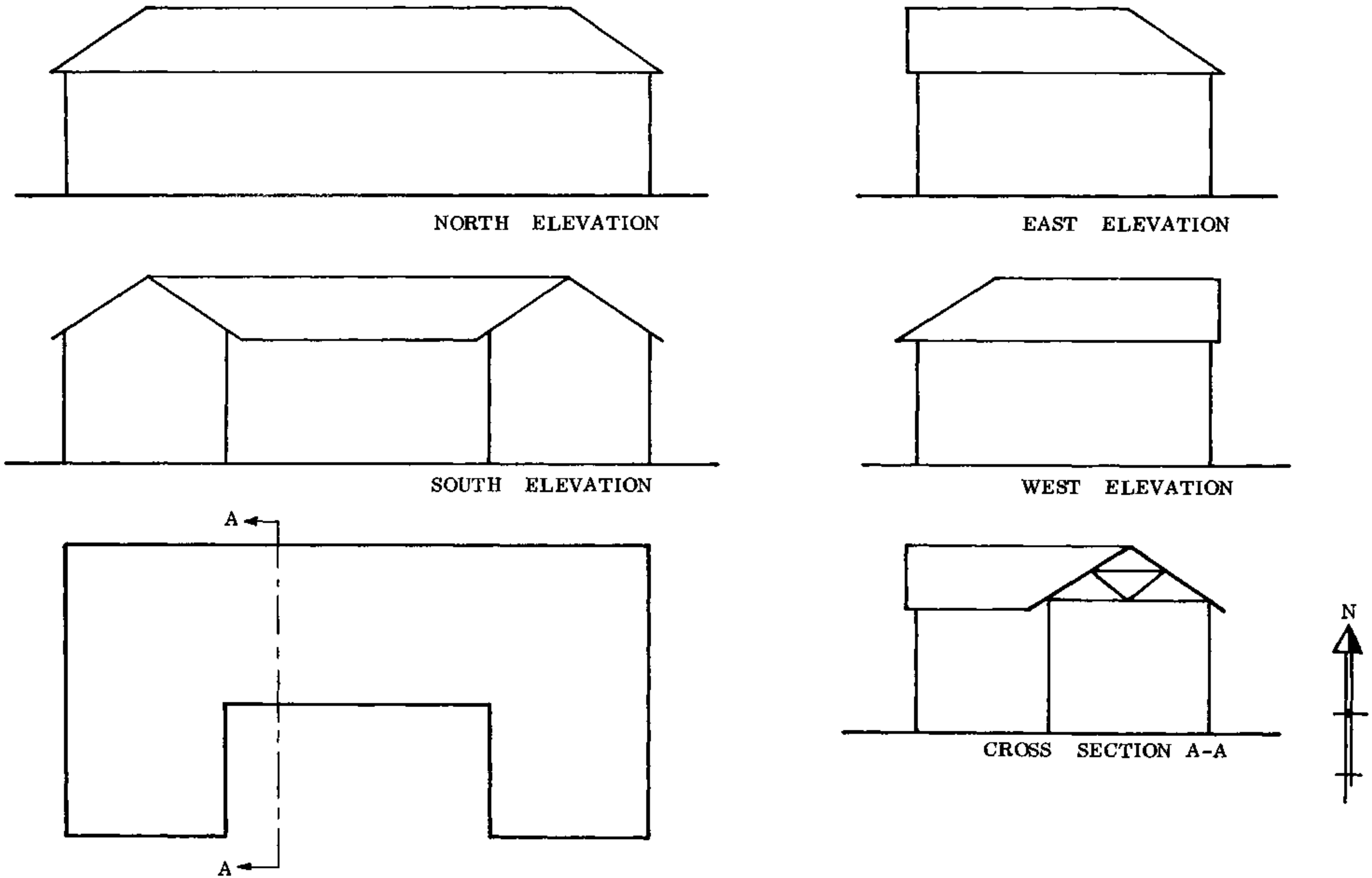

BASIC OUTLINE "U" SHAPED BUILDING UNIT

N.P.V.C.	
111.	

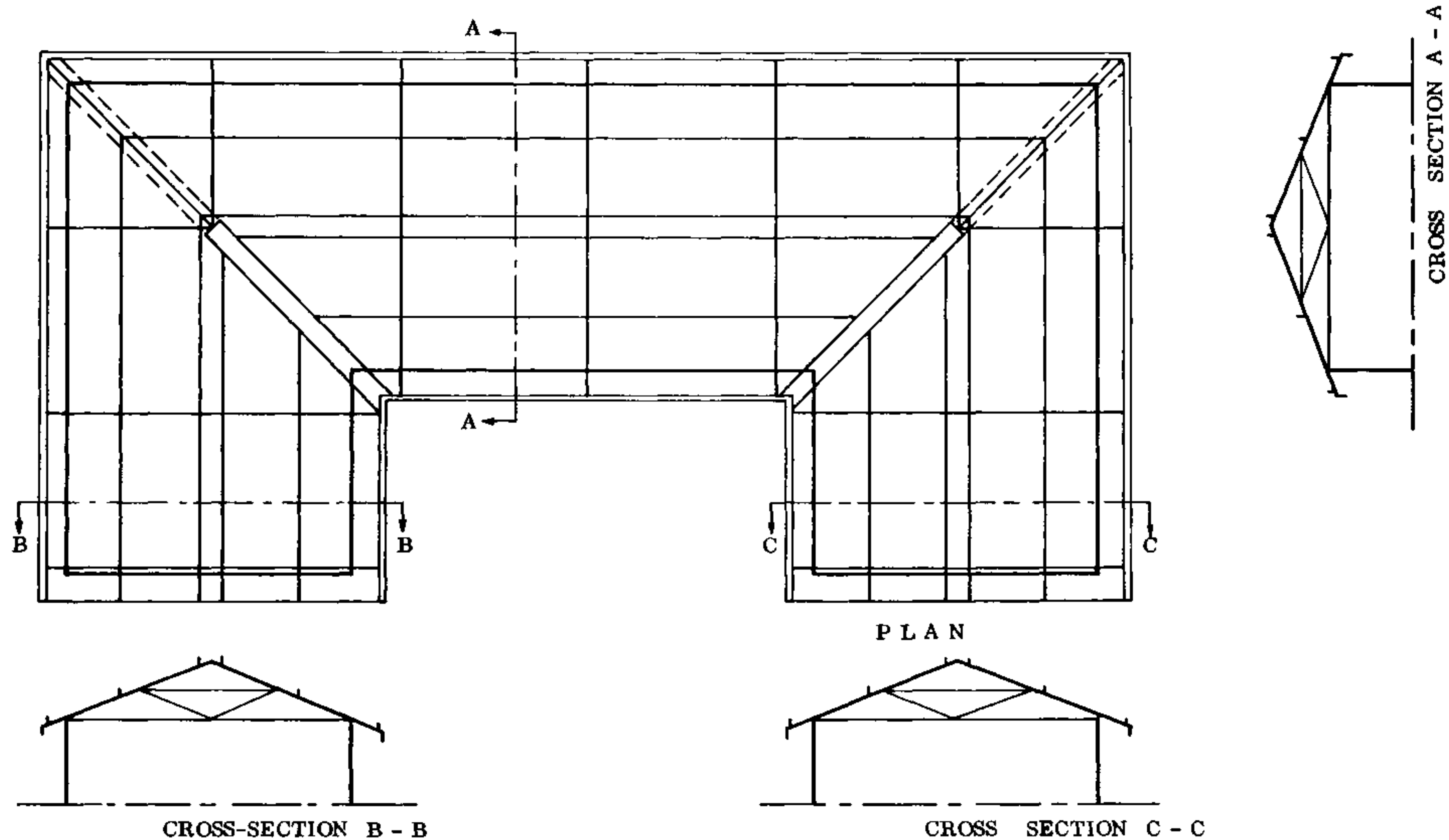

BASIC OUTLINE "U" SHAPED ROOF CONSTRUCTION

N.P.V.C.	
	112.

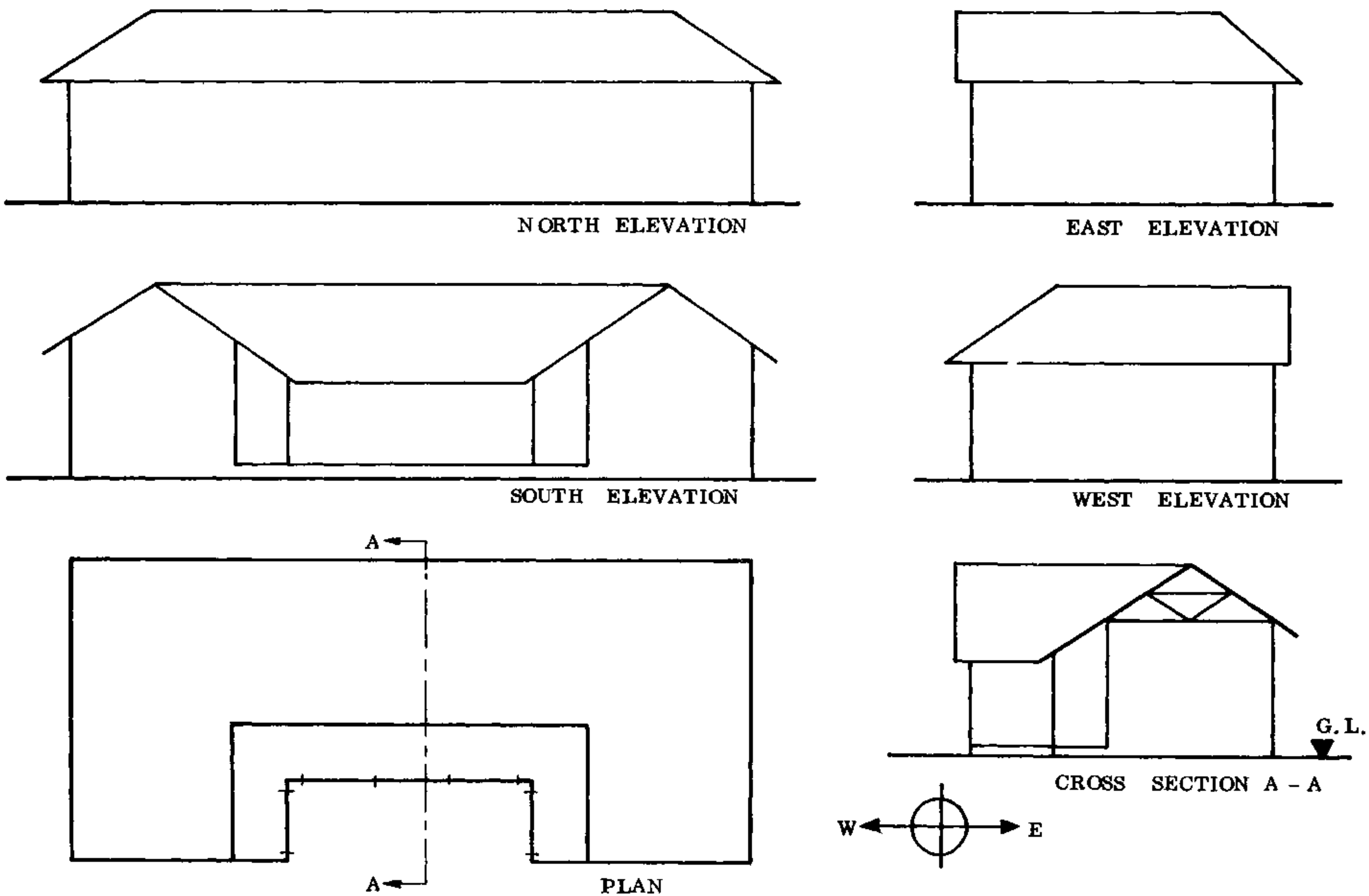

BASIC OUTLINE "U" SHAPED BUILDING UNIT
WITH RAFTER EXTENDING OVER VERANDAH

N.P.V.C.	
113.	

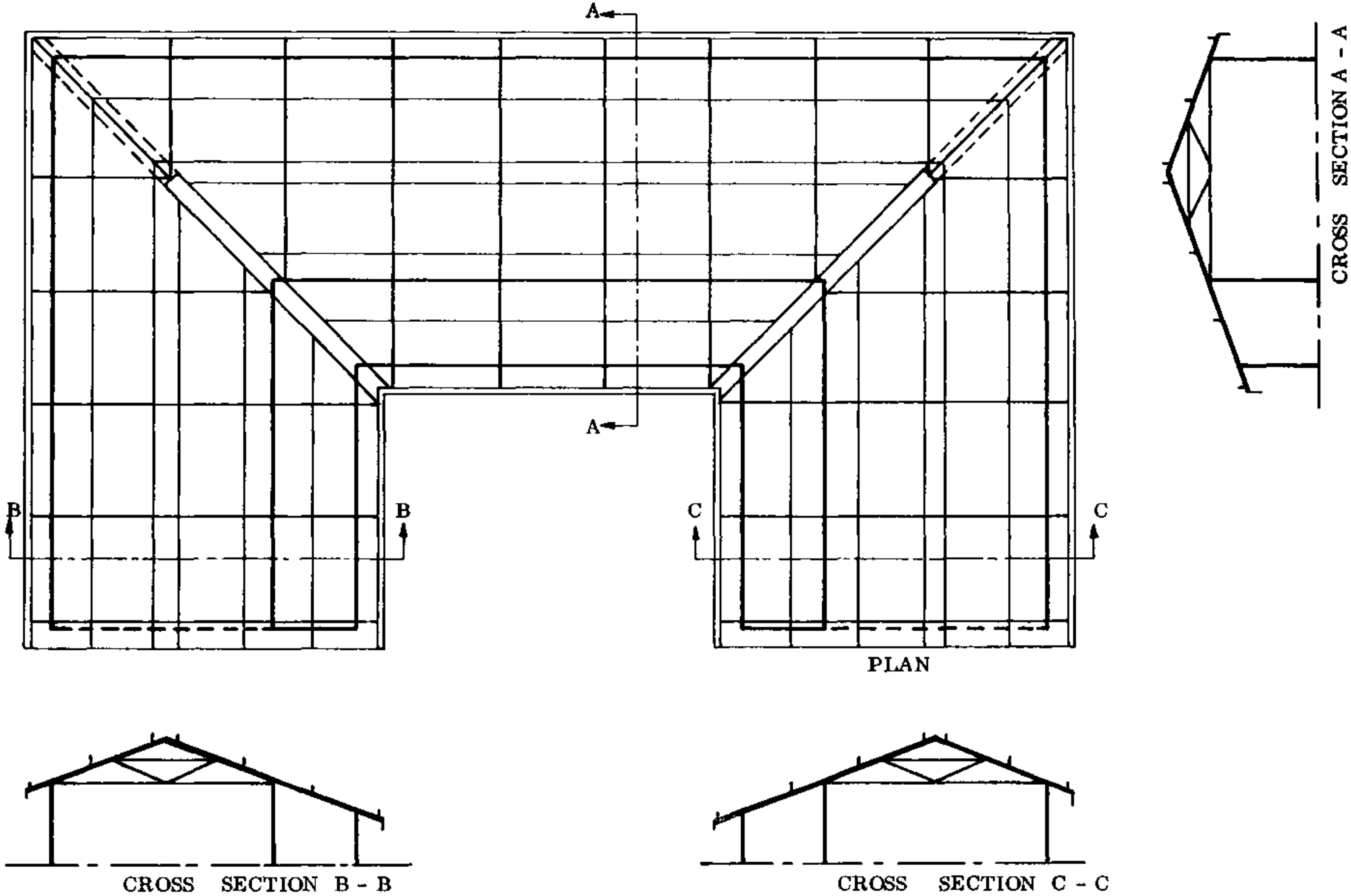

BASIC OUTLINE "U" SHAPED ROOF WITH RAFTER EXTENDING OVER VERANDAH

N. P. V. C.

114.

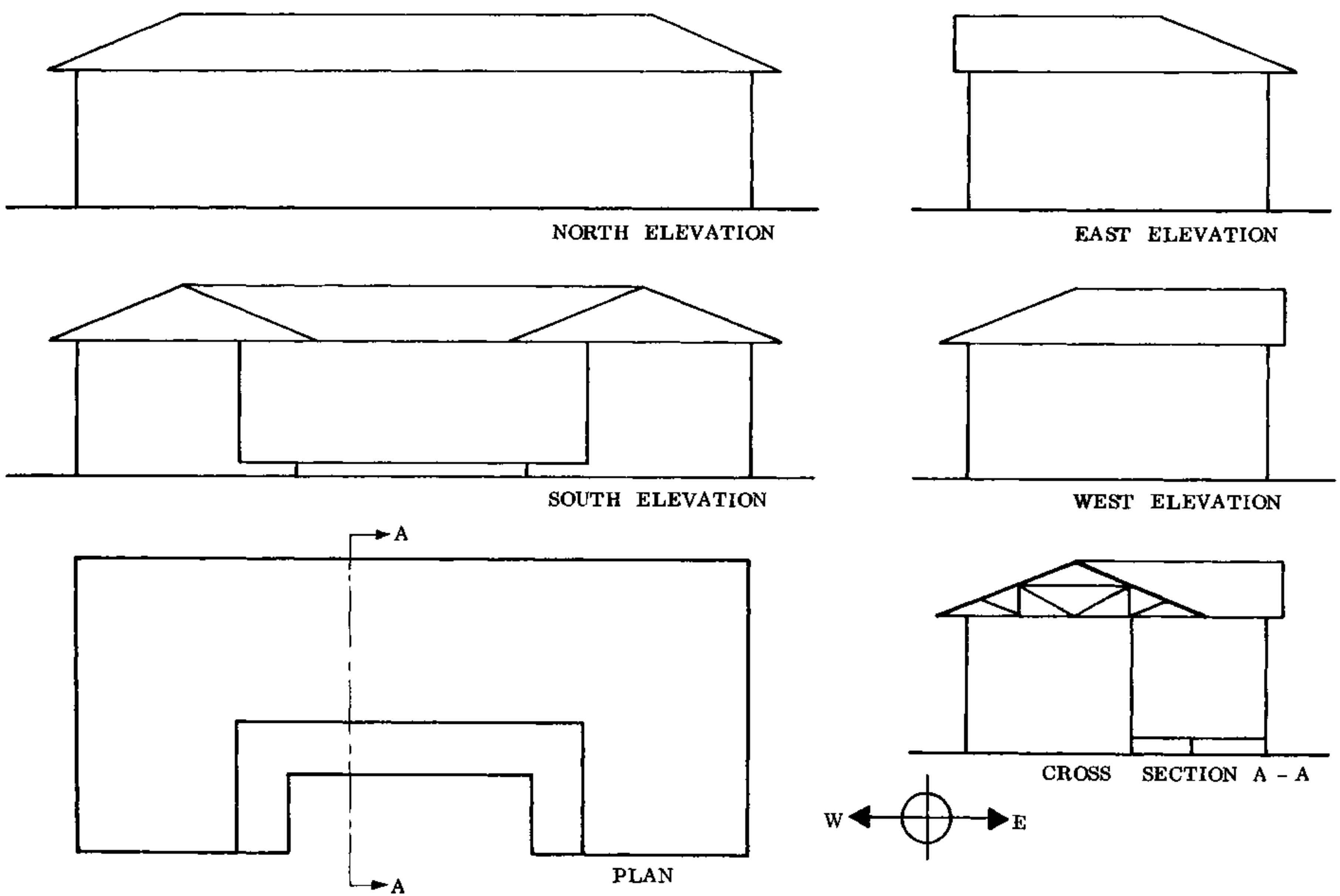

BASIC OUTLINE "U" SHAPED BUILDING UNIT WITH TIE BEAM EXTENDING OVER VERANDAH

N.P.V.C.	
115.	

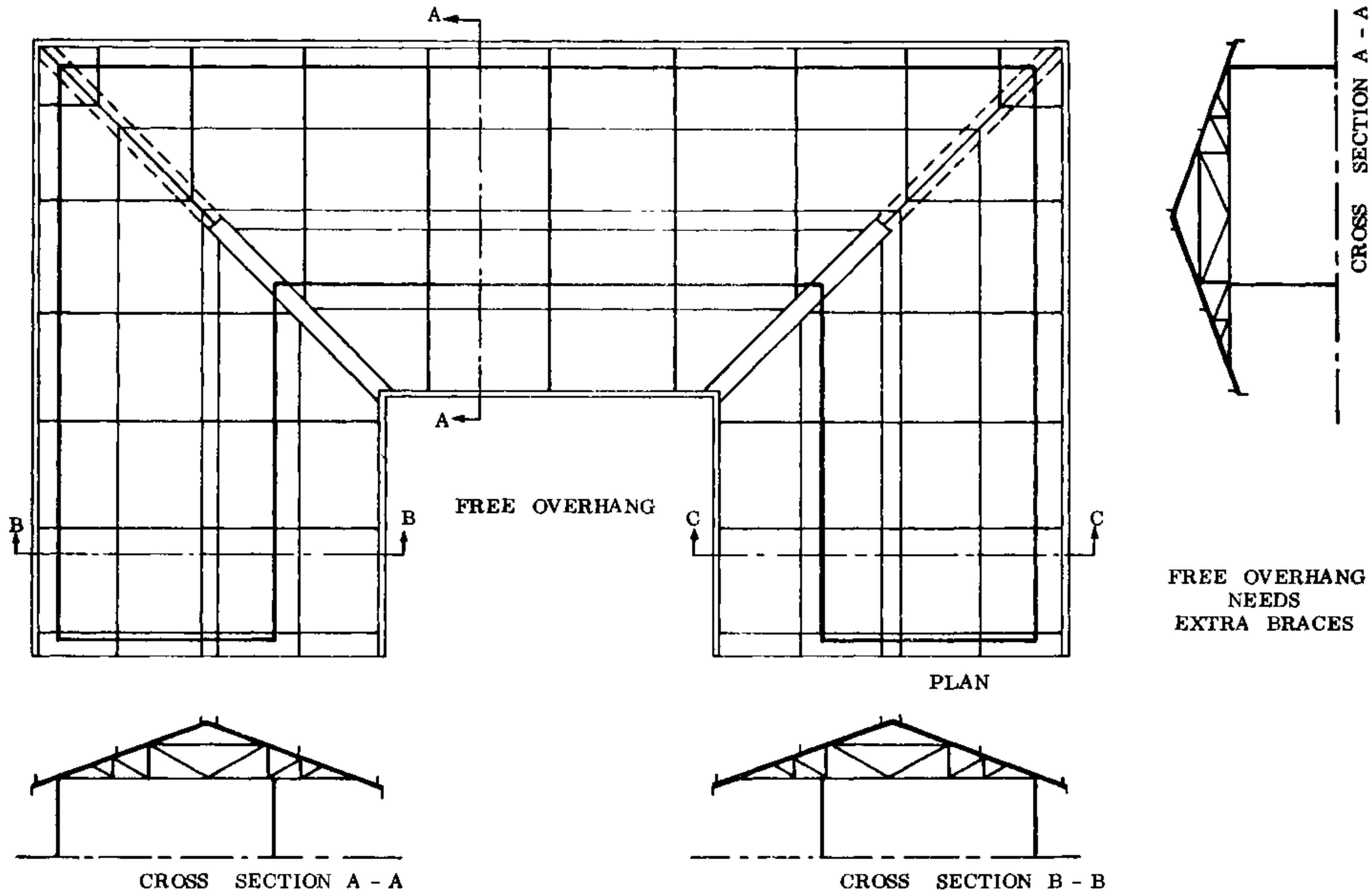

BASIC OUTLINE "U" SHAPED ROOF WITH TIE BEAM EXTENDING OVER VERANDAH

N . P . V . C .	
	116.

d = LENGTH OF BLOCK

COURSE 2 - 4 ETC.

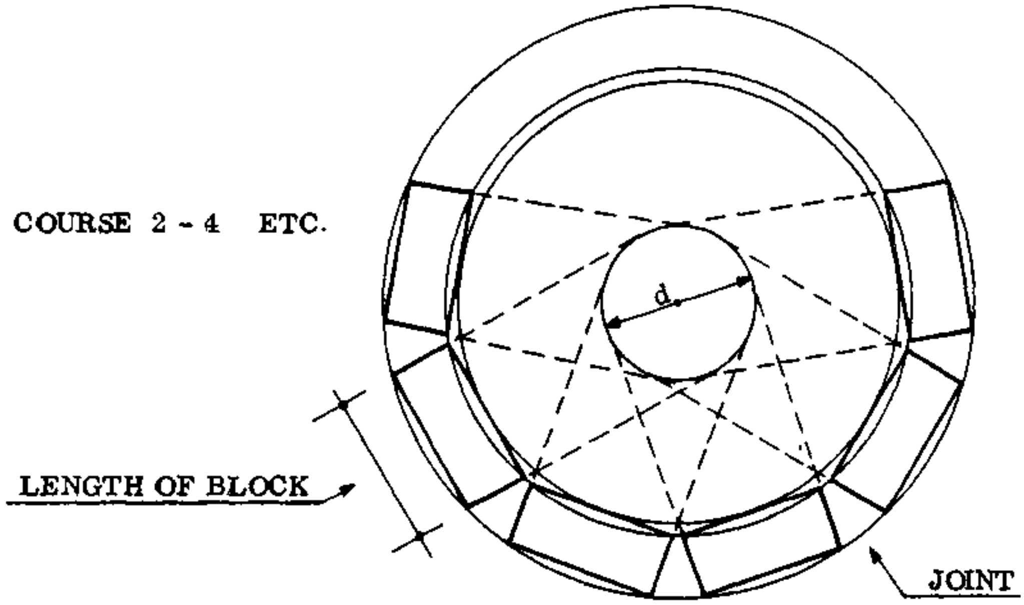

TOP VIEW

COURSE 1 - 3 ETC.

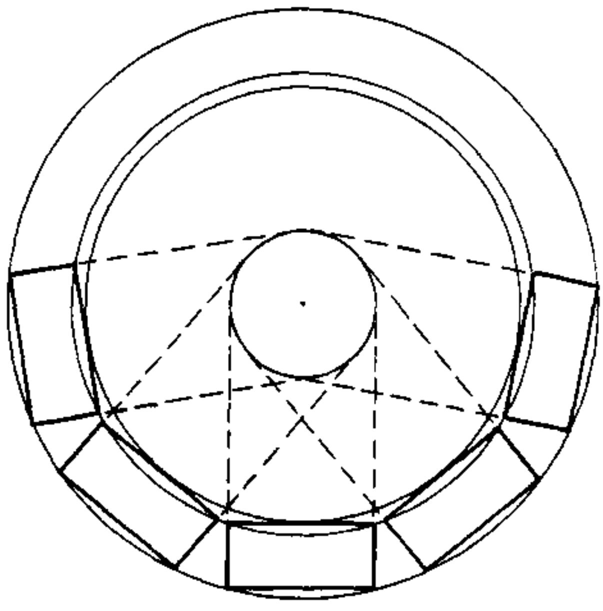

TOP VIEW

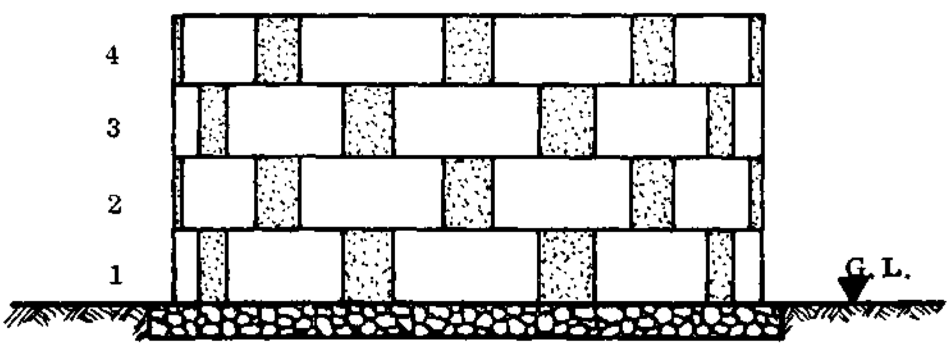

SIDE VIEW

CIRCULAR WORK

N.P.V.C.

117.

GRAIN SILO

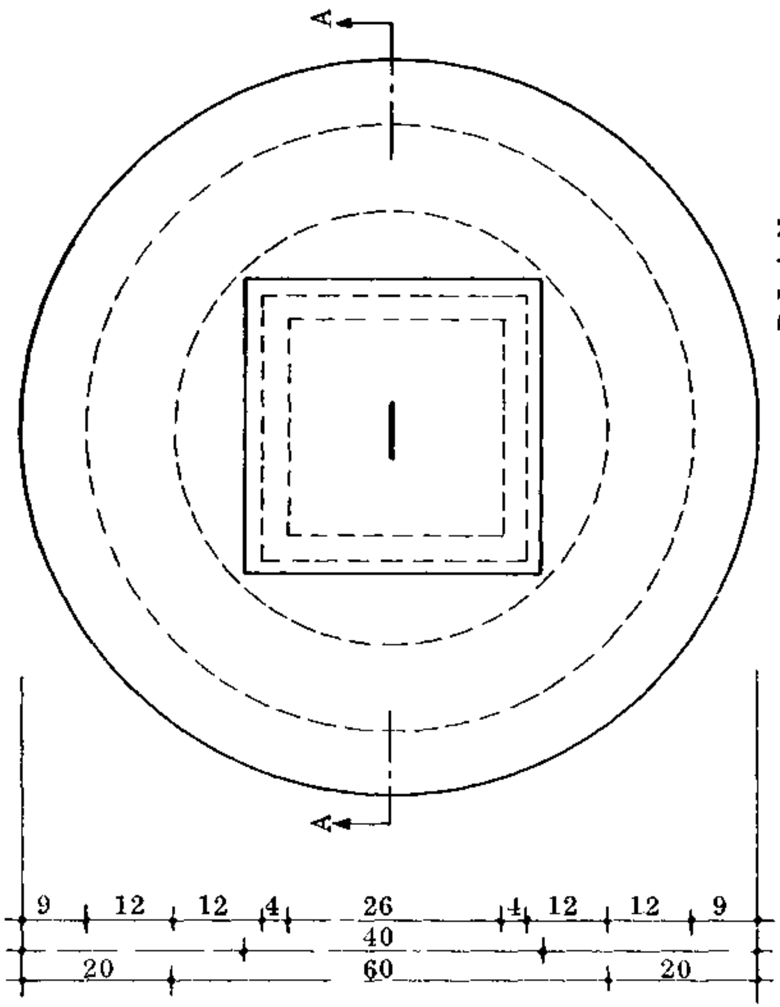

PLAN

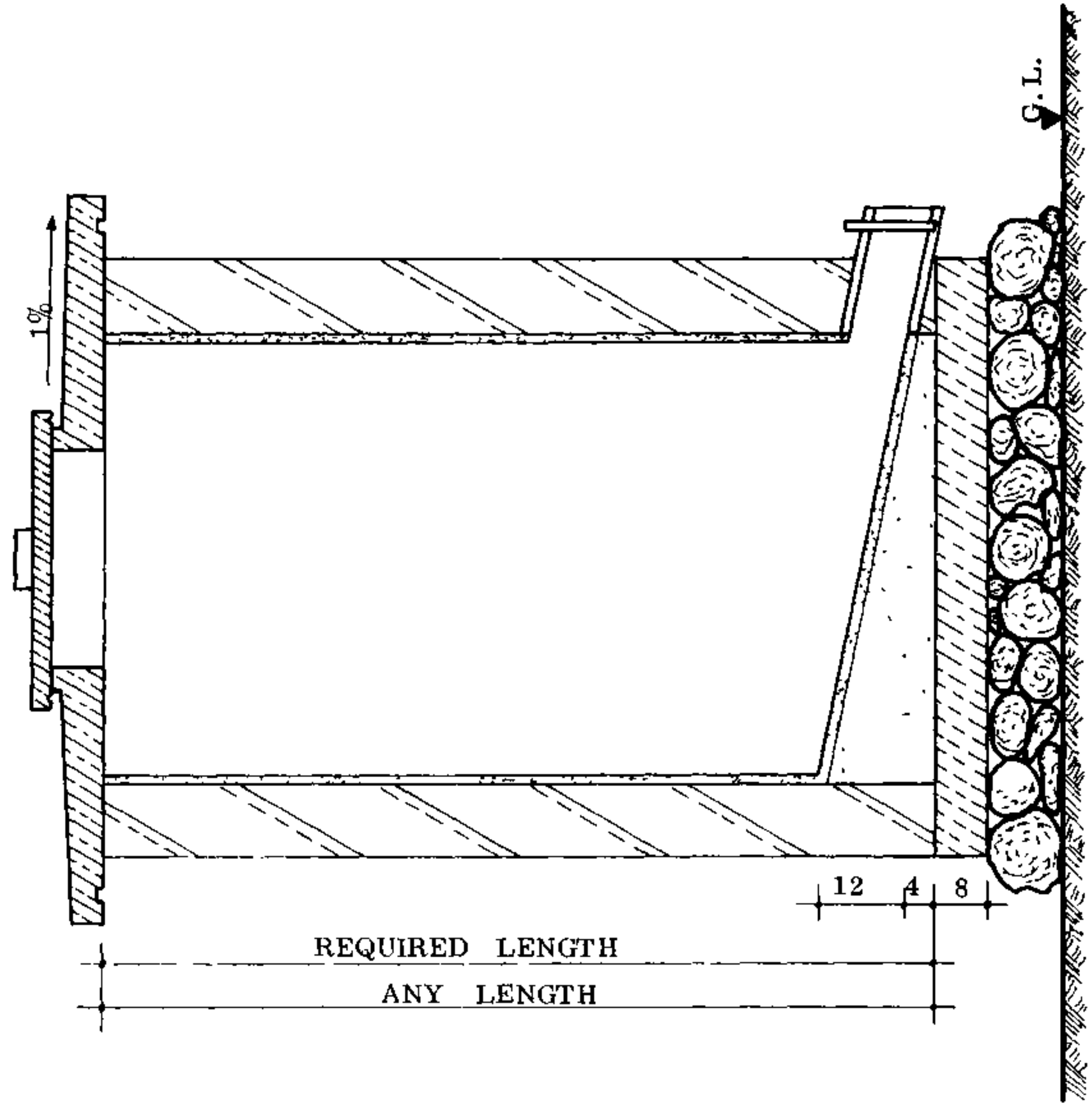

CROSS SECTION A - A

N . P . V . C.

118.

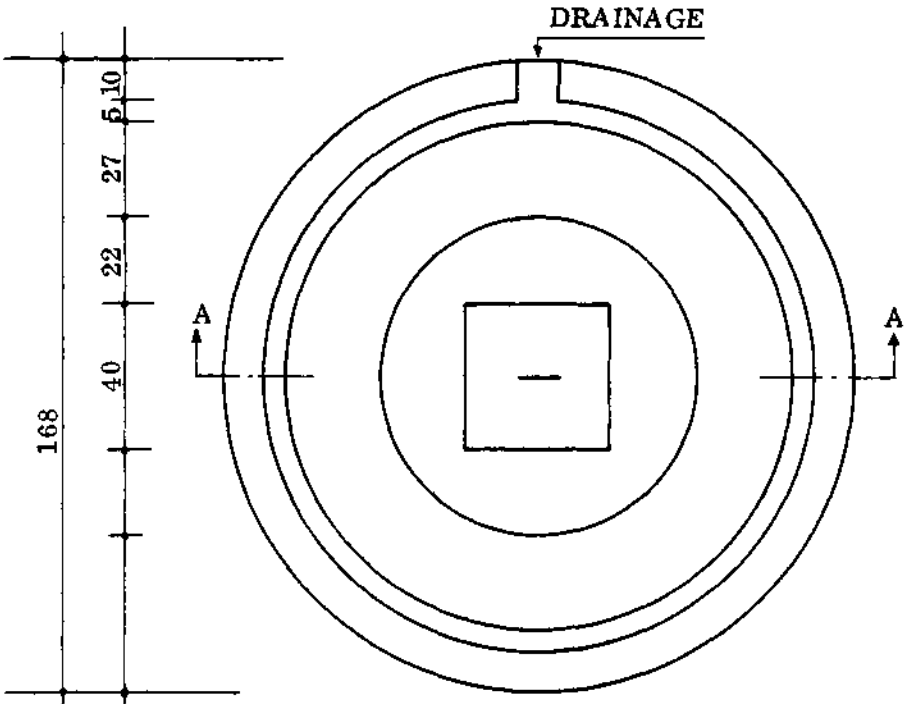

PLAN

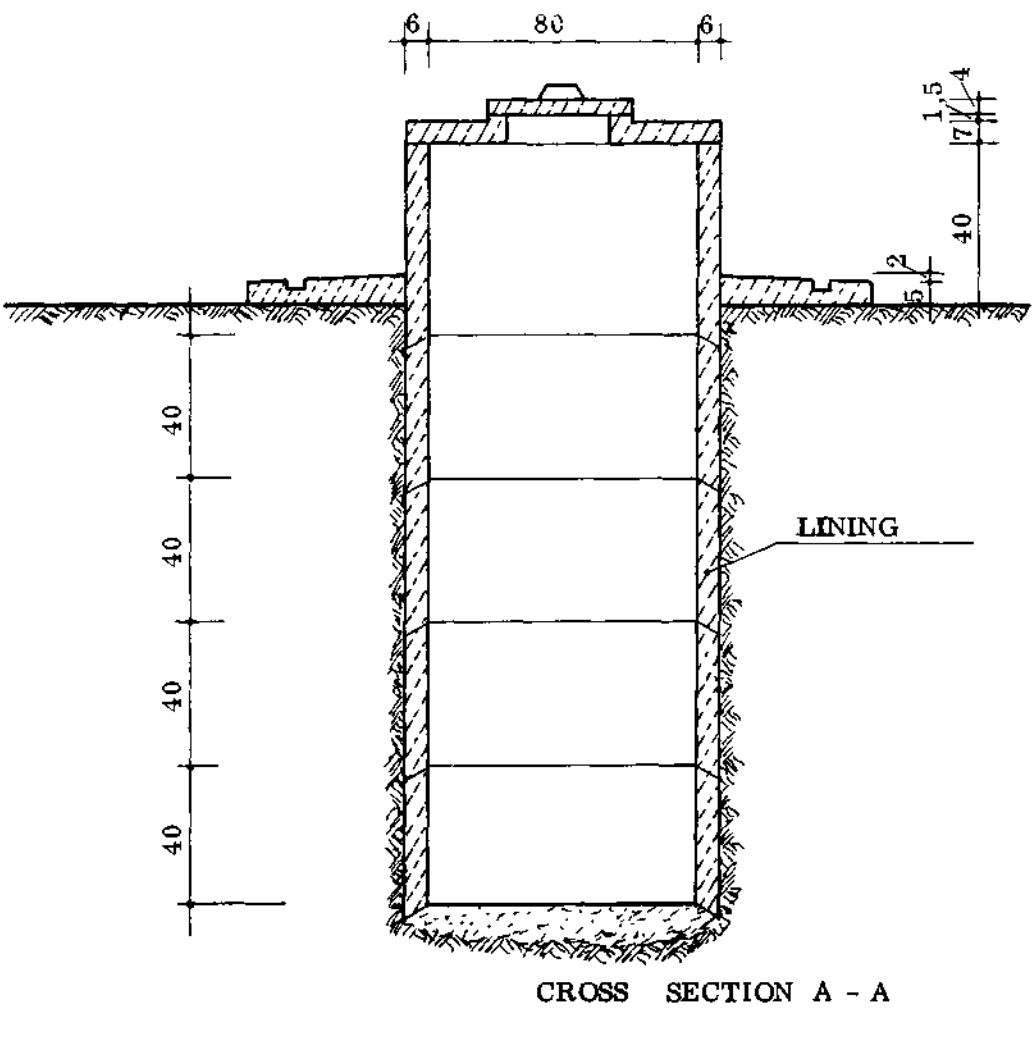

CROSS SECTION A - A

WATER WELL

N.P.V.C.

119.

WATER FILTER

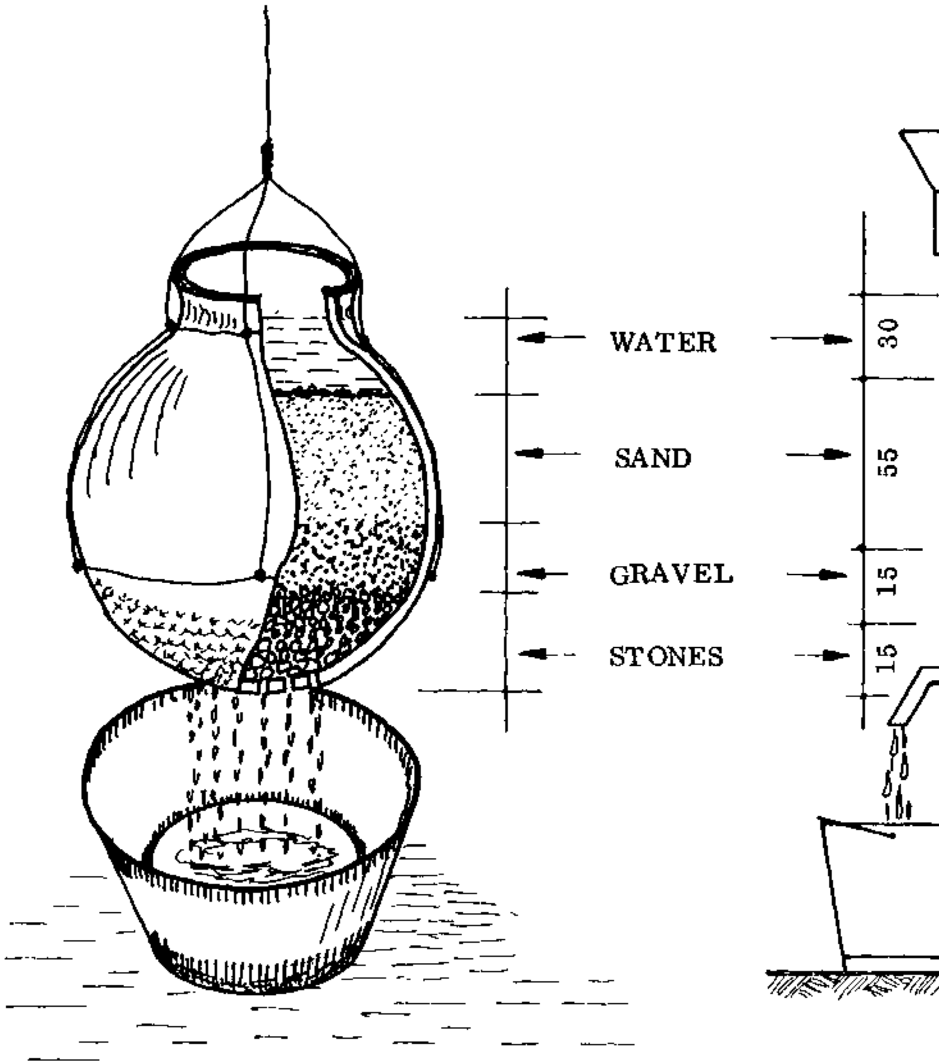

LOCAL POT

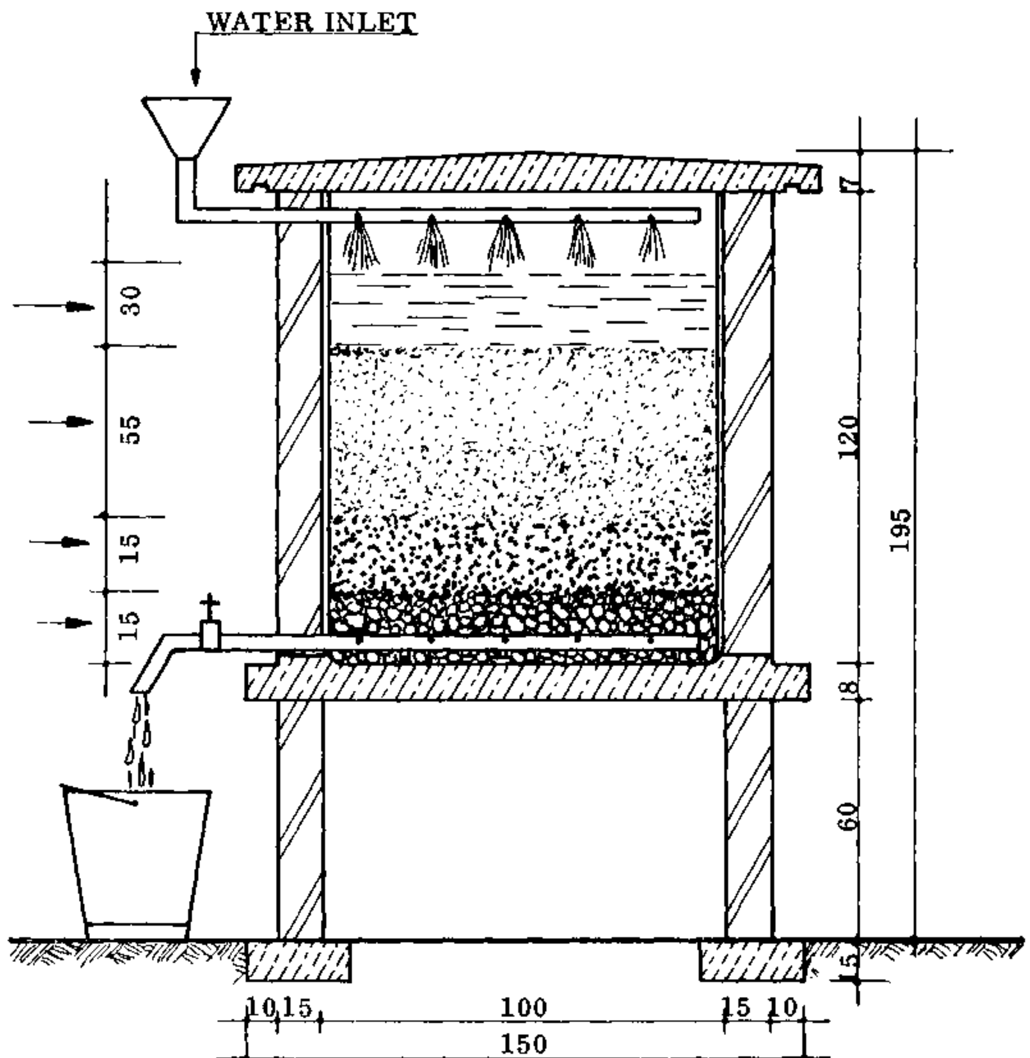

CROSS SECTION

N.P.V.C.	
	120.

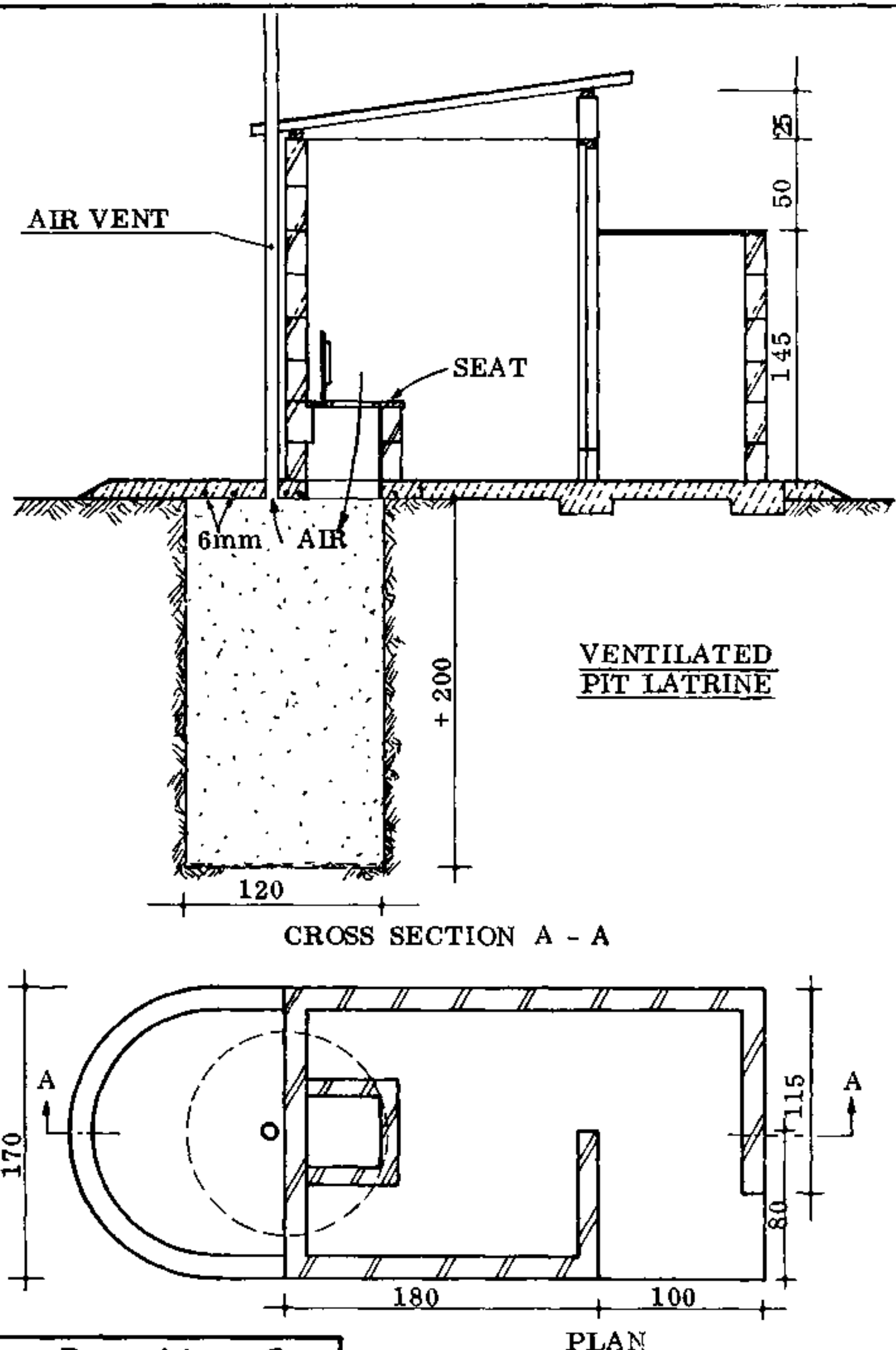

AIR VENT
SEAT
6mm
AIR
25
50
145
+ 200
120
CROSS SECTION A - A
VENTILATED
PIT LATRINE
A
170
115
80
180
100
PLAN

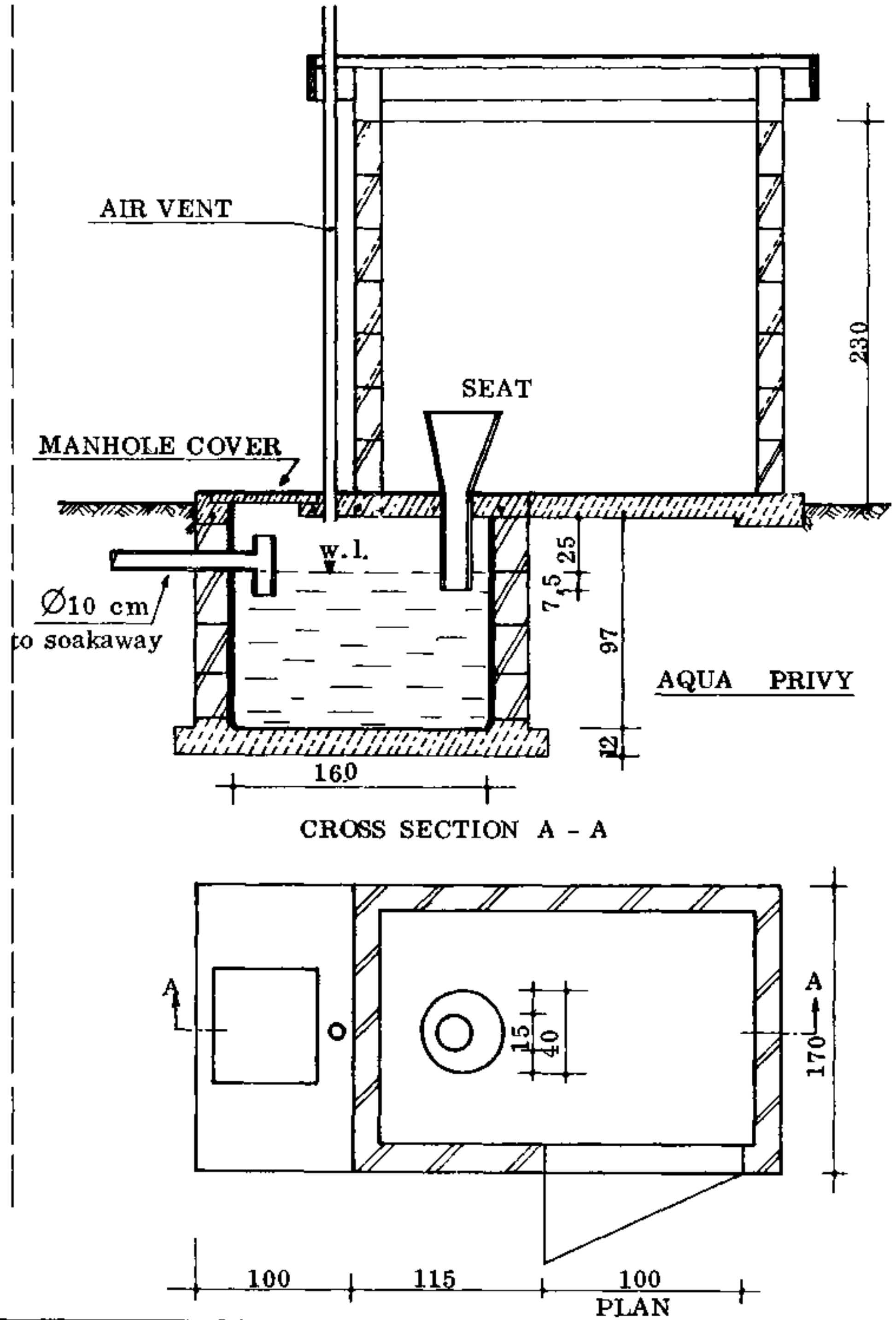

AIR VENT
SEAT
MANHOLE COVER
230
w.l.
Ø10 cm
to soakaway
25
7,5
97
12
160
AQUA PRIVY
CROSS SECTION A - A
A
15
40
170
100
115
100
PLAN

N . P . V . C .	
121.	

PIT LATRINE

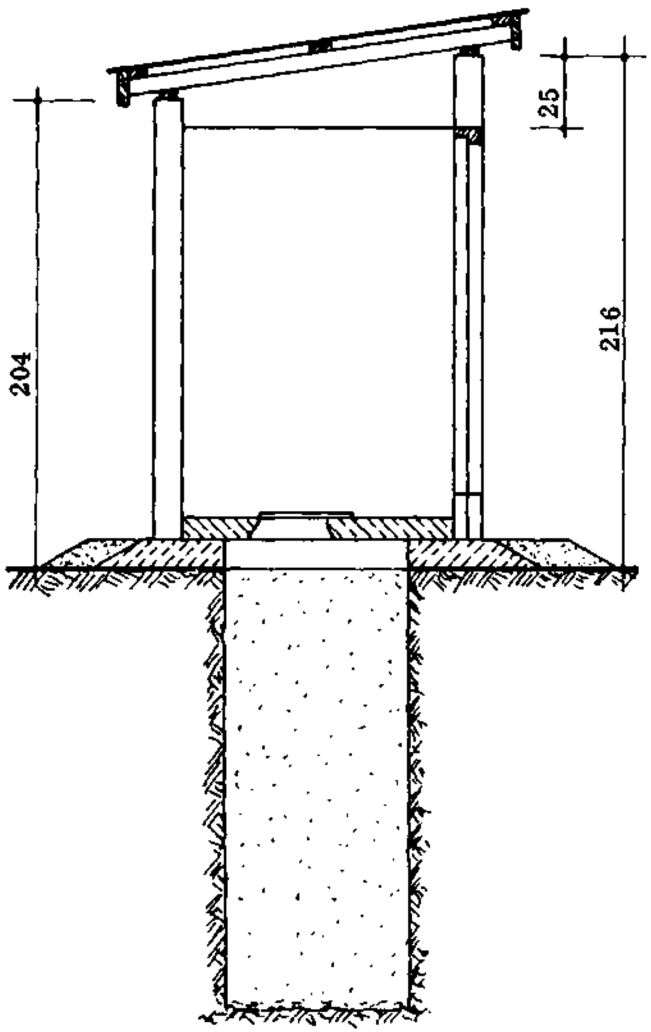

REMOVABLE LIGHT-WEIGHT CONSTRUCTION AND SLAB CAN BE REUSED.

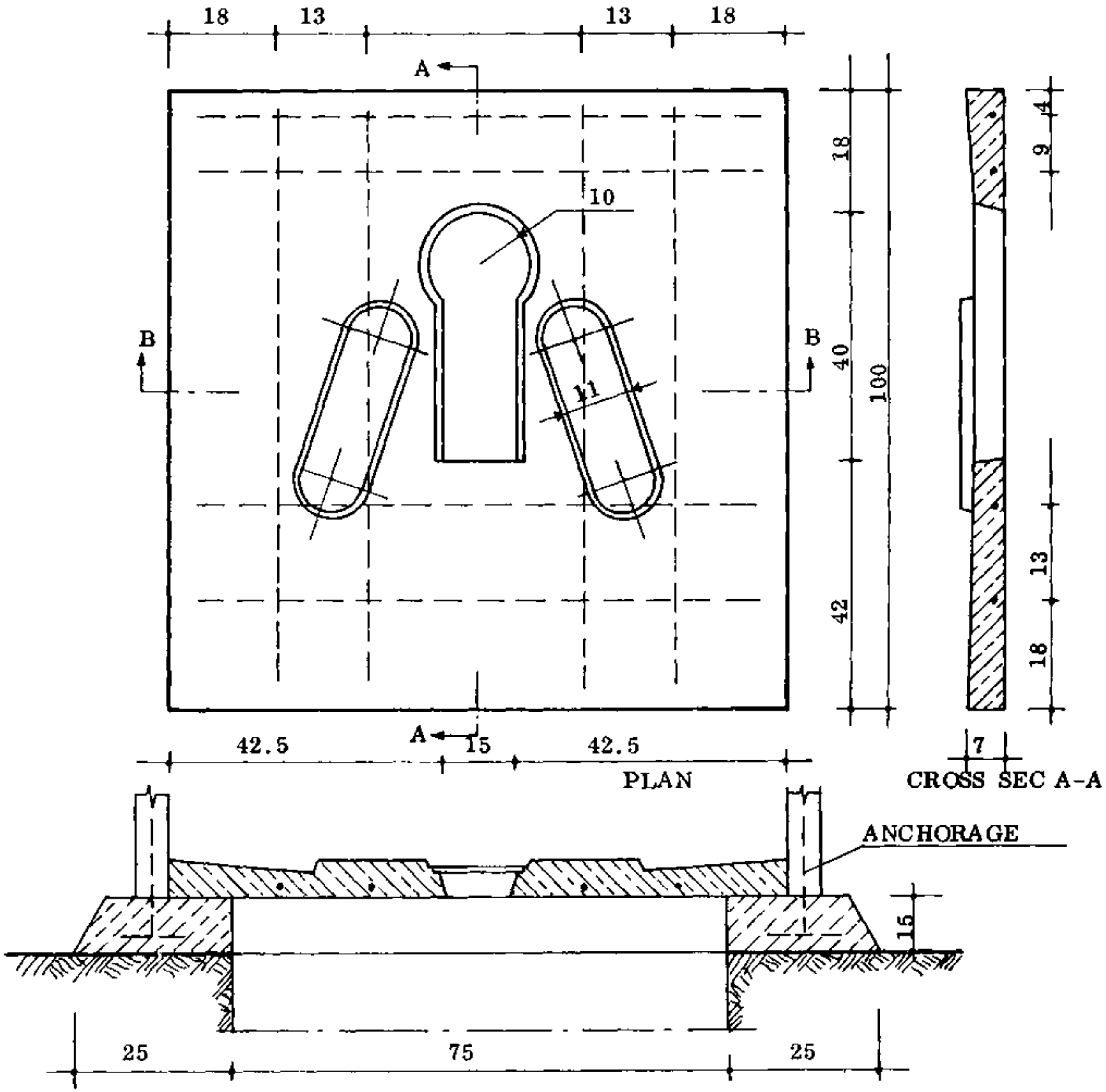

SQUATTING SLAB

N. P. V. C.	
	122.

BUCKET LATRINE

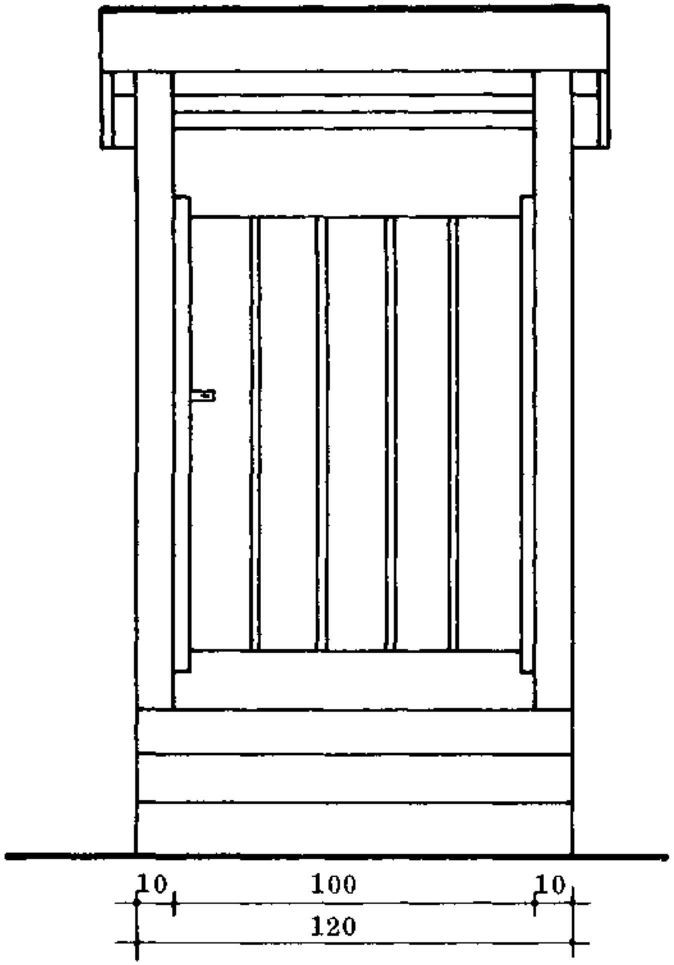

FRONT ELEVATION

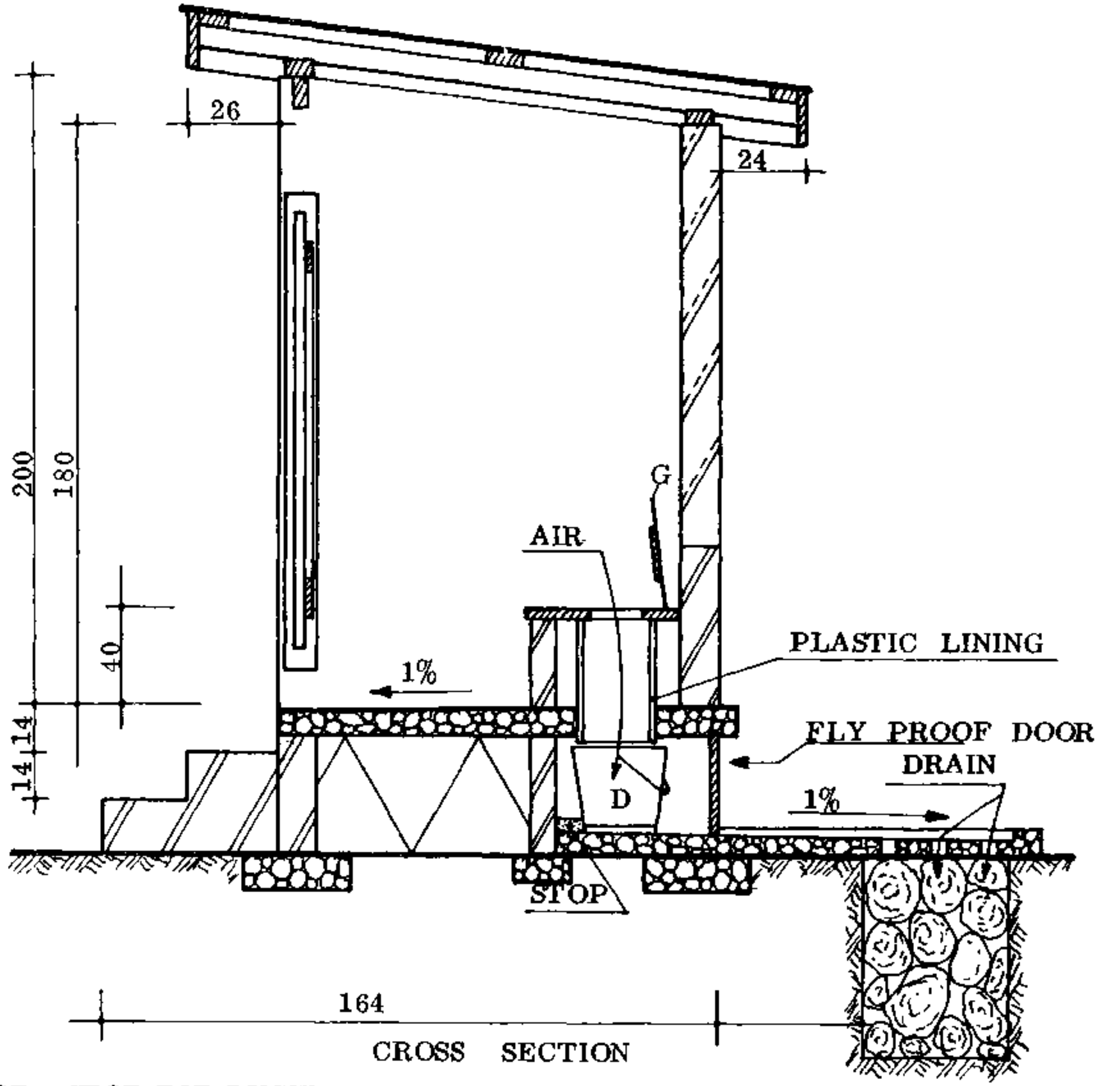

CROSS SECTION

STOP = STOP FOR BUCKET
C = SOAKAGE PIT
D = BUCKET
G = COVER

N . P . V . C .

123.

PIT LATRINE

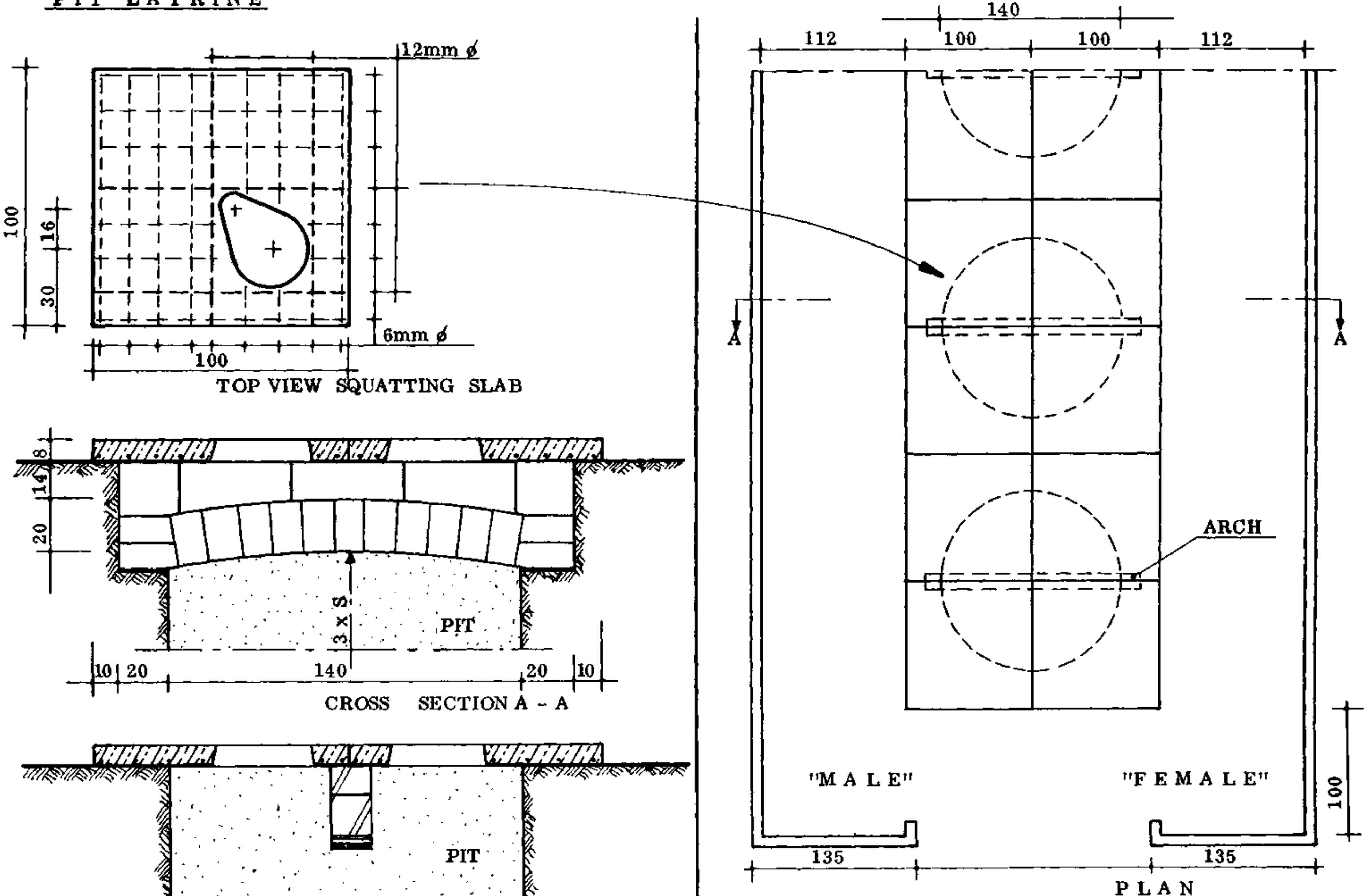

TOILET PARTITIONS ARE LIGHT-WEIGHT STRUCTURES.

N. P. V. C.	
	124.

MANHOLE

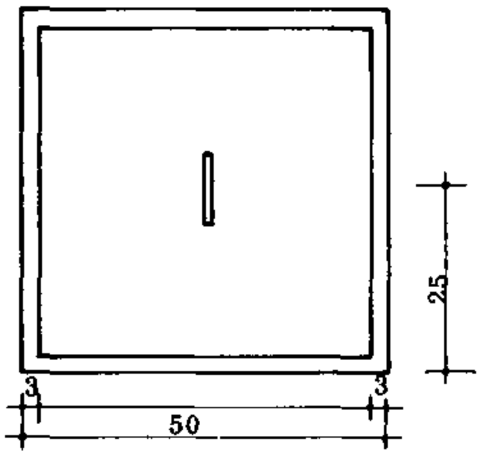

TOP VIEW

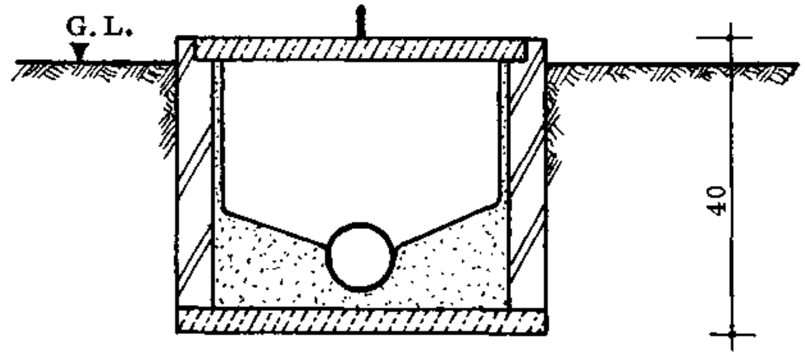

CROSS SECTION B - B

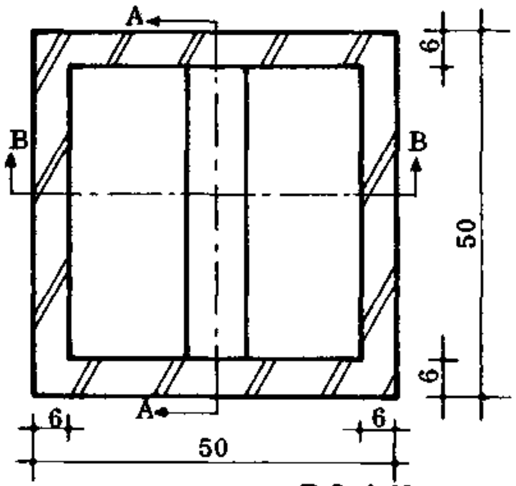

PLAN

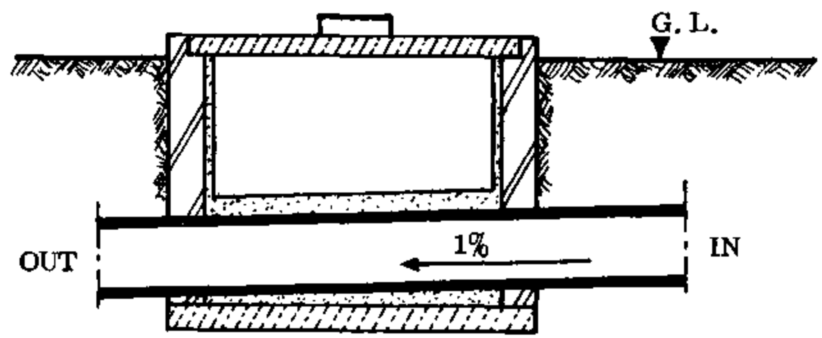

CROSS SECTION A - A

INSIDE DIMENSIONS DEPEND UPON TOTAL FLOW.

N . P . V . C .	
125.	

SEPTIC TANK

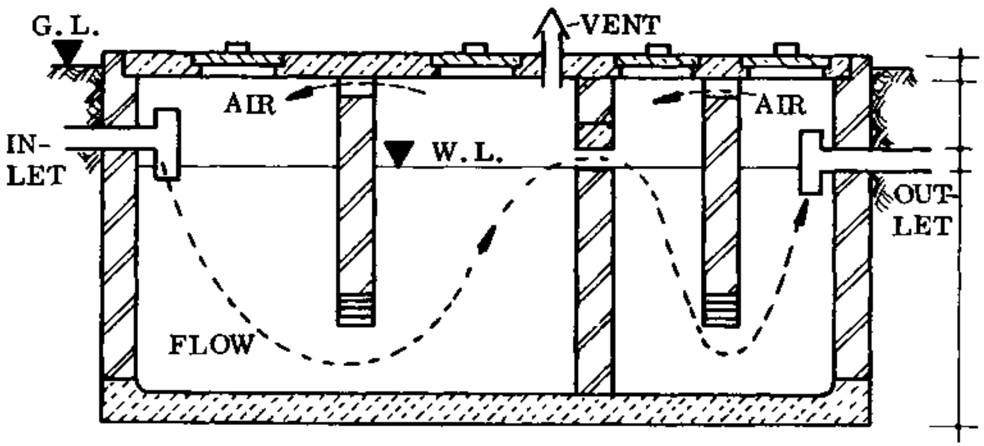

CROSS SECTION A - A

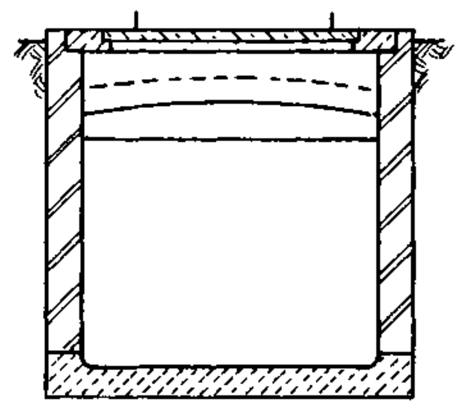

CROSS SECTION B - B

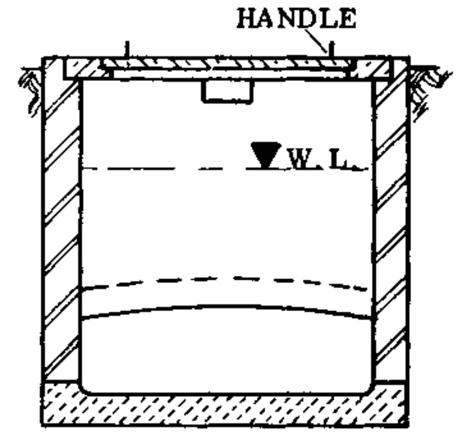

CROSS SECTION C - C

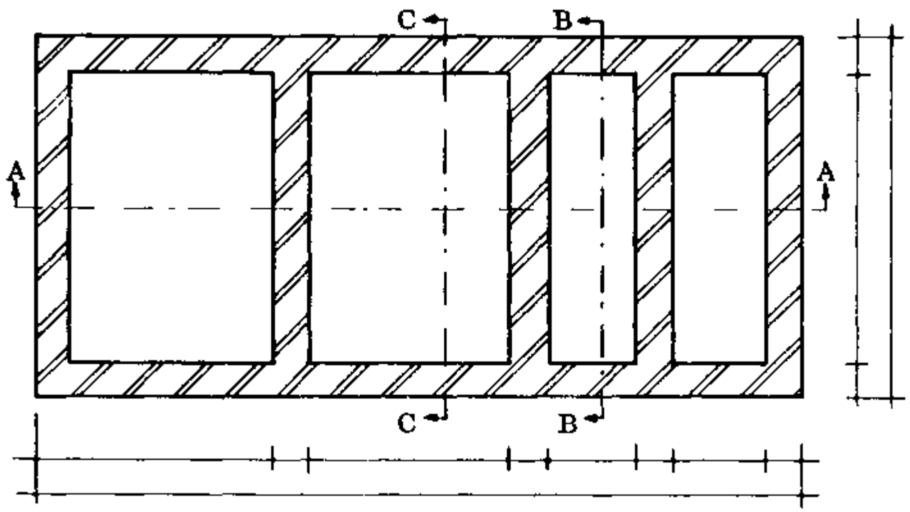

PLAN

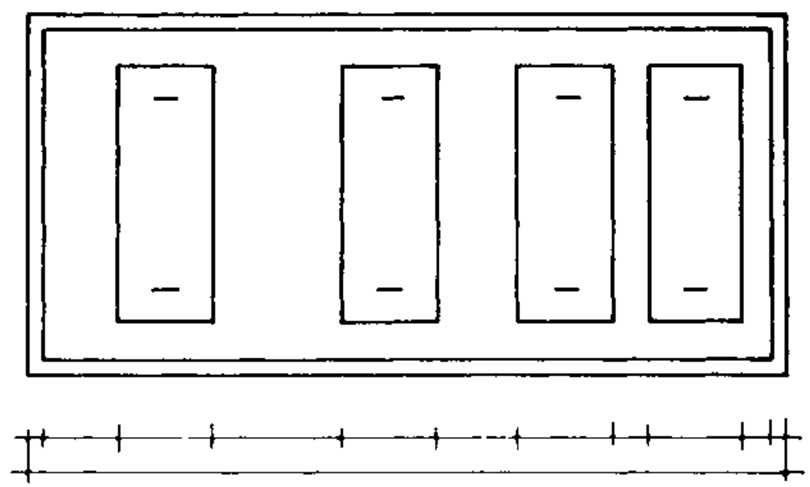

TOP VIEW

DIMENSIONS DEPEND ON THE TOTAL SEWAGE INPUT

N . P . V . C .

126.

NPVC

RURAL BUILDING

CONSTRUCTION

PREFACE

This official text book is designed purposely to meet the needs of trainees who are pursuing rural building courses in various training centres administered by the National Vocational Training Institute.

The main aim of this book is to provide much needed trade information in simple language and with illustrations suited to the understanding of the average trainee.

It is the outcome of many years of experiment conducted by the Catholic F.I.C. brothers of the Netherlands, and the German Volunteer Service instructors, in simple building techniques required for a rural community.

The National Vocational Training Centre is very grateful to Brothers John v. Winden and Marcel de Keijzer of F.I.C. and Messrs. Fritz Hohnerlein and Wolfram Pforte for their devoted service in preparing the necessary materials for the book; we are also grateful to the German Volunteer Service and the German Foundation For International Development (DSE) - AUT, who sponsored the publication of this book.

We are confident that the book will be of immense value to the instructors and trainees in our training centres.

DIRECTOR: National Vocational Training
Institute, Accra

INTRODUCTION TO A RURAL BUILDING COURSE

Vocational training in Rural Building started in the Nandom Practical Vocational Centre in 1970. Since then this training has developed into an official four year course with a programme emphasis on realistic vocational training.

At the end of 1972 the Rural Building Course was officially recognised by the National Vocational Training Institute. This institute guides and controls all the vocational training in Ghana, supervises the development of crafts, and sets the examinations that are taken at the end of the training periods.

The Rural Building programme combines carpentry and masonry, especially the techniques required for constructing housing and building sanitary and washing facilities, and storage facilities. The course is adapted to suit conditions in the rural areas and will be useful to those interested in rural development, and to farmers and agricultural workers.

While following this course, the instructor should try to foster in the trainee a sense of pride in his traditional way of building and design which is influenced by customs, climate and belief. The trainee should also be aware of the requirements of modern society, the links between the old and new techniques, between traditional and modern designs - and how best to strike a happy medium between the two with regard to considerations like health protection, storage space, sewage and the water supply. The trainee should be encouraged to judge situations in the light of his own knowledge gained from the course, and to find his own solutions to problems; that is why this course does not provide fixed solutions but rather gives basic technical information. The instructor can adapt the course to the particular situation with which he and the trainee are faced.

This course is the result of many years of work and experimentation with different techniques. The text has been frequently revised to serve all those interested in Rural Development, and it is hoped that this course will be used in many vocational centres and communities. It is also the sincere wish of the founders of this course that the trainees should feel at the completion of their training that they are able to contribute personally to the development of the rural areas, which is of such vital importance to any other general development.

We are grateful to the Brothers F.I.C., the National Vocational Training Institute and the German Volunteer Service for their assistance and support during the preparation of this course.

Bro. John v. Winden (F.I.C.)
Wolfram Pforte (G.V.S.)
Fritz Hohnerlein (G.V.S.)

LAY-OUT OF THE RURAL BUILDING COURSE

The Rural Building Course is a block-release-system course, which means that the trainee will be trained in turn at the vocational centre and at the building site. The period of training at the centre is called “off-the-job” training, and the period on the building site is called “on-the-job” training. Each will last for two years, so that the whole course will take four years and will end with the final test for the National Craftsmanship Certificate.

BLOCK RELEASE SYSTEM

YEAR	TERM 1	TERM 2	TERM 3
1	X	X	X
2	O	O	O
3	O	X	O
4	X	O	X

X = OFF-THE-JOB TRAINING
O = ON-THE-JOB TRAINING

The total “off-the-job” training period is approximately 76 weeks, each week 35 hours. During this training about 80% of the time is spent on practical training in the workshop. The remaining 20% of the time is devoted to theoretical instruction.

The total “on-the-job” training period is approximately 95 weeks, each week 40 hours. During this period the trainee does full-time practical work related to his course work. In addition some “homework” is assigned by the centre and checked by the instructors.

A set of books has been prepared as an aid to the theoretical training:

A - Rural Building, Basic Knowledge (Form 1)
B - Rural Building, Construction (Forms 2, 3, 4)
C - Rural Building, Drawing Book (Forms 1, 2, 3, 4)
D - Rural Building, Reference Book

All these books are related to each other and should be used together. The whole set covers the syllabus for Rural Building and will be used in the preparation for the Grade II, Grade I, and the National Craftsmanship Certificate in Rural Building.

CONTENTS

BOOK INTRODUCTION

Rural Building Construction is your main construction book. It is built up in the same logical way that a house is built up: starting with the preliminaries of setting out and ending with the roof construction, hanging the doors, and the finishing.

Because of the structure of the training course, it might sometimes be necessary for the instructors to rearrange this sequence and treat certain working methods either earlier or later in the course (for example, plastering is done late in the construction of a building, but it might have to be treated quite early in the actual Centre training). In any case the instruction should follow the current Rural Building syllabus, and the instructor should pick out the chapters which need to be covered according to the syllabus.

There is room for the instructor to add his own ideas, knowledge and experiences concerning the local ways of building, and to adapt the lessons to the local circumstances. The trainee should be able to adapt the knowledge he has gained to the requirements of the rural areas.

In order to work with this text book, you should be familiar with drawing techniques so that you can understand the sketches and drawings. Don't be afraid to make notes and sketches in the book: the notes made here can be helpful to you again and again in your future building career.

- The tools and materials mentioned in this book are described and explained in the Rural Building Reference Book. Some figures essential for the Rural Builder are given in the Tables of Figures at the end of the Drawing Book.

- All measurements, figures and constructions given and explained in this book are made in accordance with the standard sizes of timber, steel, etc. which are commonly used in Ghana.

The appendix gives some basic designs and construction information for water filters, wells, sanitation systems, and a silo for improved grain storage.

BUILDING PRELIMINARIES

Site selection

When choosing the location of the planned building, the responsible builder will strongly advise his client to avoid building on valuable farm land, if possible.

Most Rural Builders come from farming communities; they are building for farmers, and they also do farming themselves. Thus they are very conscious of the land and know that good land should never be wasted by building on it.

Moreover, the Rural Builder is aware that there are a number of advantages in building on higher, stony areas not suitable for farming.

Some of the advantages are:

- The higher the building is situated, the healthier and more comfortable it will be to live in, because of the better ventilation and the reduced danger from dampness rising from the ground.

- Building materials such as stones and laterite are often available on the spot, and do not need to be brought from far away.

- The soil in higher areas is more likely to be the desired type to form a firm base for the house. This makes the construction of the foundations easier, and reduces the amount of building materials required, keeping the costs lower.

NOTES:

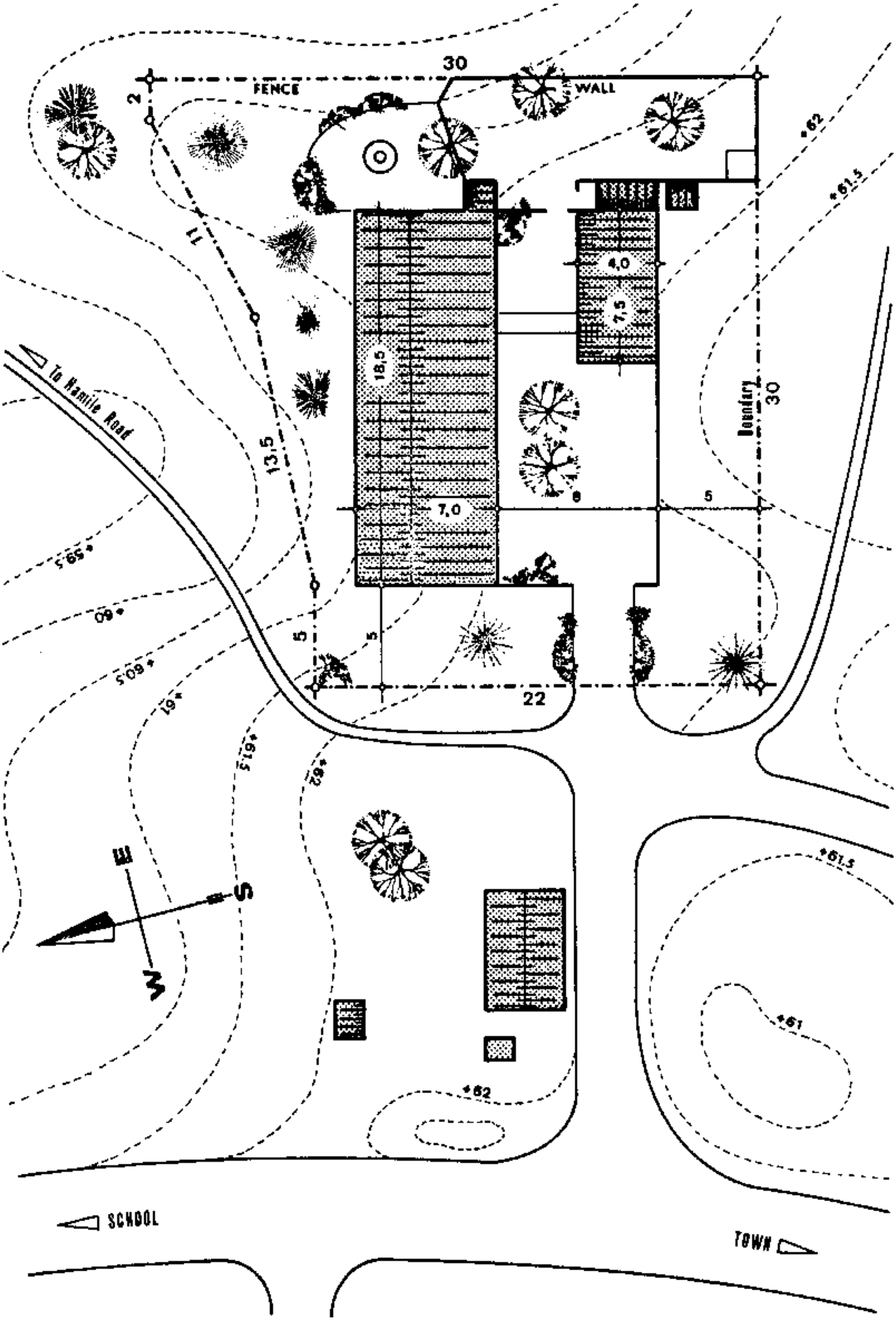
30
FENCE
WALL
2
11
13,5
18,5
7,0
4,0
7,5
Boundary
30
5
22
To Hamile Road
SCHOOL
TOWN
+62
+61,5
+61
+60,5
+60
+59,5
E
S
W

Location plan

When building a house or any other structure one must have certain information available, in order to arrive at the best and most economical result.

The most basic information is the location, size and nature of the plot. This is contained in the location plan, which shows the plot and the immediate surroundings in scale. The scale can be from 1:200 up to 1:1000, depending on the size of the project.

The plan outlines the shape of the plot and the dimensions of its boundaries, as well as the location of the future building. It should also show the nature of the area, because it is very important to know whether the site is sloping or if the ground is uneven.

Roads, drive ways and the positions of the bigger trees are also marked on the location plan (Fig. 1).

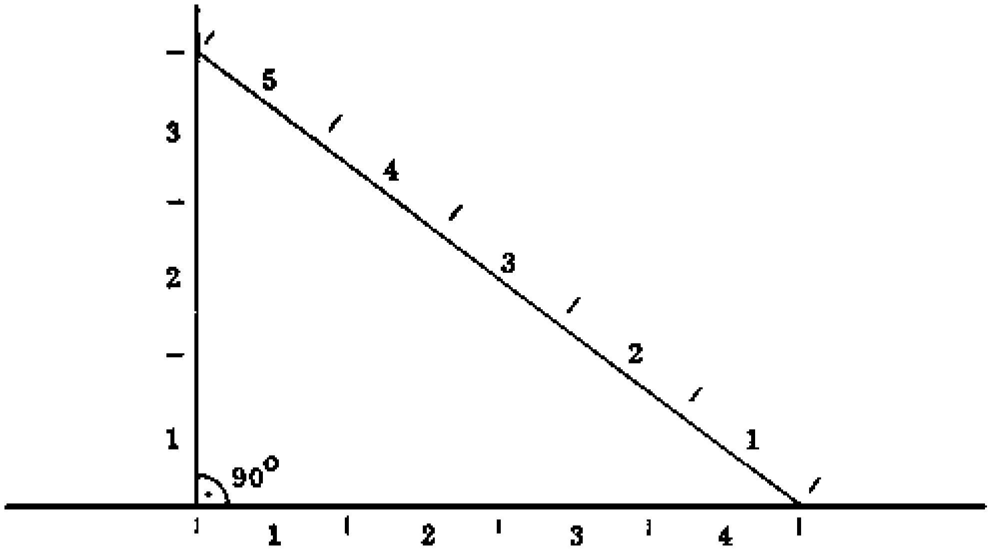

Fig. 1

In Rural Building, location plans are often not available, so in order to get the necessary information, both the client and the builder have to examine the plot thoroughly. Important matters such as the best position for the future building are discussed and decided on the spot.

When the site has been examined thoroughly and all the measurements and particulars have been obtained, the drawings for the house can be prepared.

- NOTE: Before the building can be started, all the required drawings have to be ready, and at the disposal of the foreman. Before you can prepare any drawings, you need to have all the particulars of the site.

NOTES:

Working drawings

The working drawings are the drawings which the builder uses before the construction starts and during the construction; to plan for materials requirements, to plan the work; and finally to carry out the construction according to the directions contained in the drawings.

The drawings include “plans”, “cross sections”, “elevations”, and “detail drawings”. They are all prepared in scales which are suitable to the particular drawing. The first three types of drawing have a scale of between 1:50 and 1:20.

- PLANS: A plan is a view that shows a certain layer or horizontal section of a building as if it were looked at from above (see Drawing Book, page 55). The plans usually include the “floor plan”, which shows the walls, positions of the doors and windows, etc. (Drawing Book, page 54); the “foundation plan” gives the dimensions of the foundations and footings; and the “roof plan” which shows the shape of the roof and its dimensions. The floor plan and the foundation plan are often combined into one drawing.

- CROSS SECTIONS: A cross section is a drawing which shows the inside of the structure, as if the building were cut into two (see the Drawing Book, pages 61 and 62). The exact position where the cross section is taken has to be shown on the plan.

- ELEVATIONS: These are the views of the building as it would look from the outside (see pages 59 and 60 in the Drawing Book).

- DETAIL DRAWINGS: These show members or portions of the structure in a larger scale than the other drawings; such as 1:10, 1:5, 1:2,5, etc. Detail drawings are made when:

  - There is not enough space in the other drawings to clearly indicate all the required measurements.

  - The member of the structure is too small to be properly shown in the other drawings.

  - The member has a complicated shape and more views or cross sections are needed to explain it (see Drawing Book, page 84).

  - Important construction hints have to be pointed out.

  - The member is built up from several different materials.

The working drawings have to show the various materials used in the structure (see Drawing Book, pages 49 to 50). This enables the builder to make a list of the materials that will be required and the amount of each material (see the Reference Book, Tables of Figures, pages 234 to 240.

When this is done the builder can estimate the cost of the building and order the materials he will need. Ordering materials has to be done in advance so that the materials are there when they are needed.

Plot and site clearing

Once the planning work has been completed, the plot and site both have to be prepared for the setting out. The location plan shows exactly from which areas the trees, bushes, grass and stones must be removed. The ground is levelled. The part of the plot which is cleared will be the actual site that the future building will occupy, including a space of about 5 m all around the building.

One very important measure is to remove all the tree roots from the site area. If the roots remain, they will sometimes grow again and might damage the structure. This is particularly true with the roots of the neem tree.

Clearing does not mean that all the trees on the whole plot are removed. Beyond the 5 m clear space, as many trees as possible should be allowed to remain, because they will provide shade for the people using the building or living there.

Site organization

The first step in organizing the site is deciding where to make the driveway.

Next, choose the area where the building materials will be stored and arrange the storage facilities. Certain materials like sand and stones may have to be located, excavated, and transported to the site. This can be done as soon as the storage areas are located.

The building materials should not be stored too far away from the working place, nor should they be too close.

Space has to be provided for making blocks, and for mixing concrete and mortar. This also should not be too close to the future building.

The same applies to any temporary work sheds or storage sheds that are erected.

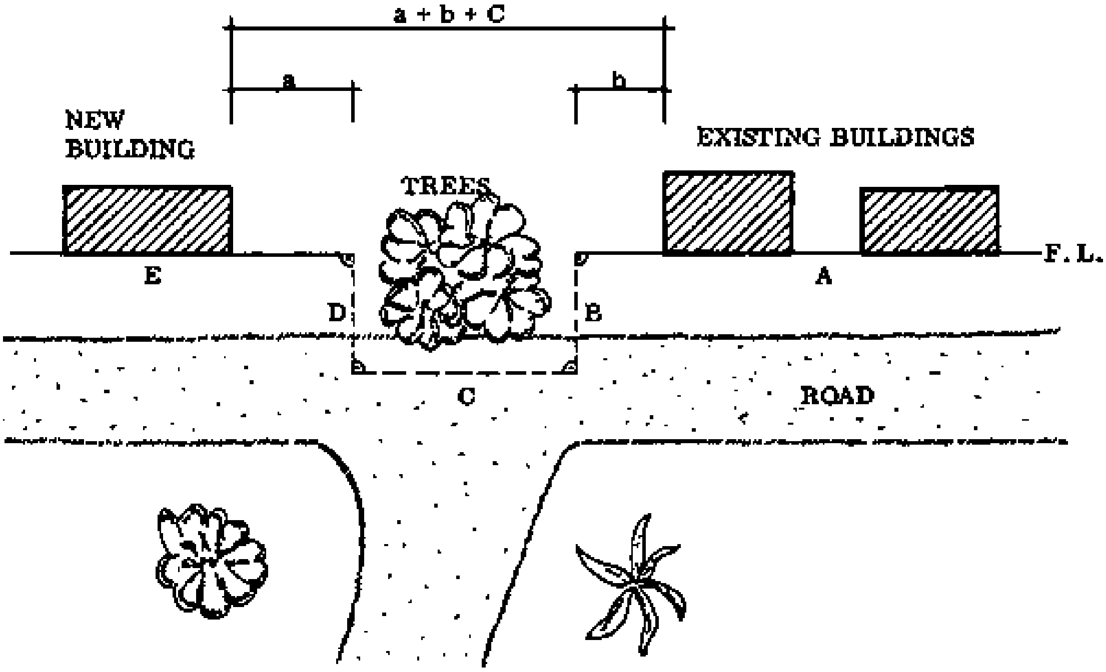

Fig. 2

NOTES:

Water supply

Any kind of building would be impossible without water. Therefore one of the main tasks of the builder is to provide a guaranteed supply of clean water.

Usually piped water is not available, so it is advisable to build a simple water tank, or else dig a well if this is possible (see the Appendix, pages 277 to 281).

The water tank should be located so that after construction is completed it can be used to store rain water collected from the roof. The best site will be close to either gable end of the house so that the rainwater from the gutters can be fed into the tank directly.

Investigate the possibilities for digging a well, as this would eliminate the need to transport water and thus cut down on unnecessary effort and cost.

SETTING OUT

Once the plot and site clearing is completed, the setting out can be done: first mark the frontline of the building and from there mark all the other lines using the 3-4-5 method described in the Basic Knowledge book, page 142.

However, not all sites are conveniently flat and level, and the Rural Builder will frequently face more difficult situations. While the construction of a right angle remains the same, the measurement of distances and the determination of directions might sometimes be difficult.

There is also the case where there are trees or other buildings which should remain, but which are in the way when we are making a particular measurement.

Interfering objects

Provided that you have mastered the 3-4-5 method, it is relatively easy to by-pass interfering trees or buildings in setting out: it only requires a bit more time to construct the additional angles (Fig. 1).

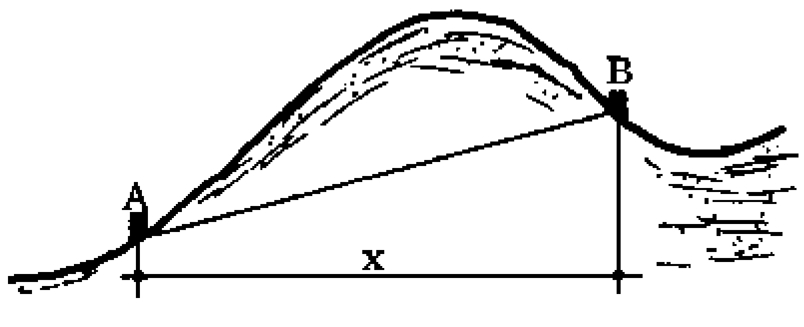

Fig. 1

Fig. 2 illustrates an example: the frontline of the existing buildings must be maintained in the new building, but it is difficult to set out directly because there are trees which are in the way. Rather than cut the trees down, we can by-pass them.

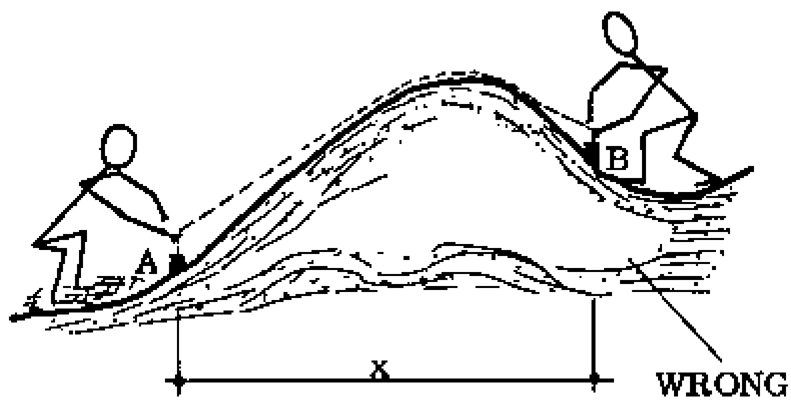

Fig. 2

From the frontline of the existing buildings (line A), set out line B, using the 3-4-5 method, perpendicular to line A. Then construct lines C and D using the same method, followed by line E which is the front line of the new building. Check that line C plus the distances “a” and “b” all add up to the total planned distance between the new building and the existing buildings (Fig. 2).

Uneven ground

Setting out on uneven ground, and particularly measuring distances, requires you to apply some simple geometry.

When we measure distances in setting out, we are actually looking for the horizontal distance between two points (Fig. 1, x). We don't measure the distance along a slope, because the house we want to build will not slope; it will have level floors and walls.

Since the ground is not flat, and the points are at different heights (point A is lower than point B), the horizontal distance between them has to be measured indirectly.

Fig. 2 shows two men trying to measure the distance between pegs A and B along uneven ground. Their result cannot be correct because the line they are holding is neither straight nor is it horizontal (measure "x" and compare it to the length of their line).

The men in Fig. 3 also fail to get the correct measurement. Their line is stretched taut and is therefore straight, but it is still not horizontal (measure "x" and compare it to the length of their line).

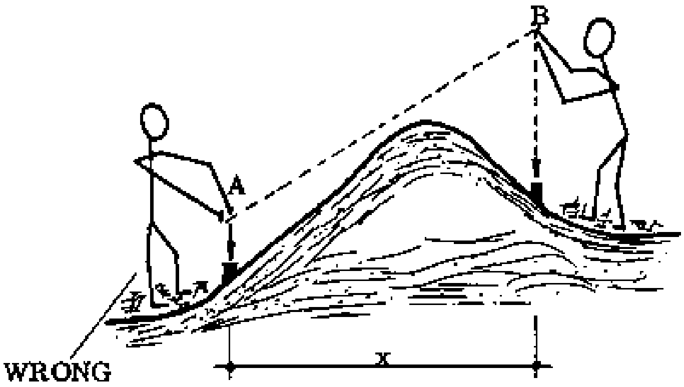

Fig. 3

In order to find the true horizontal length "x", the line or tape measure has to be held horizontally and stretched taut so it is straight. Both ends of the line are kept vertically above the pegs A and B by means of plumb bobs (Fig. 4). This method as shown is a good rough method for short distances.

If a larger distance has to be measured, the work is carried out in intermediate steps of suitable lengths (Fig. 4).

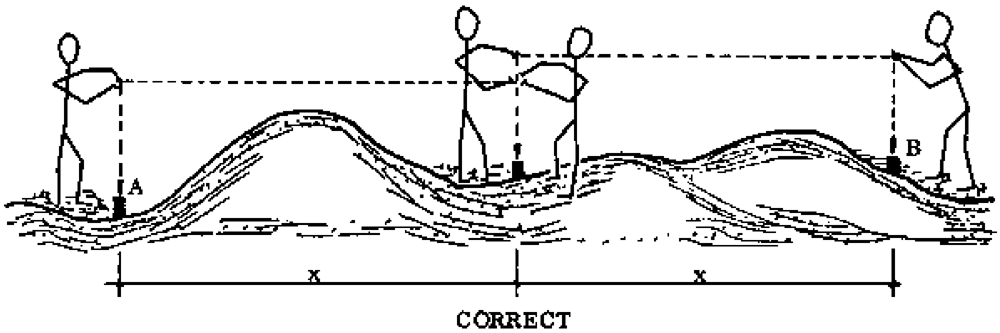

Fig. 4

For very large distances, the use of boning rods (Reference Book, page 25) can help to make sure that the different steps are in line and the total length measured is straight (Fig. 5). With the boning rods and a water level (Reference Book, page 25) you can also make sure that the whole distance is horizontal.

Use the water level to level between two boning rods; then any points in between can also be levelled by simply sighting along the boning rods (Fig. 5).

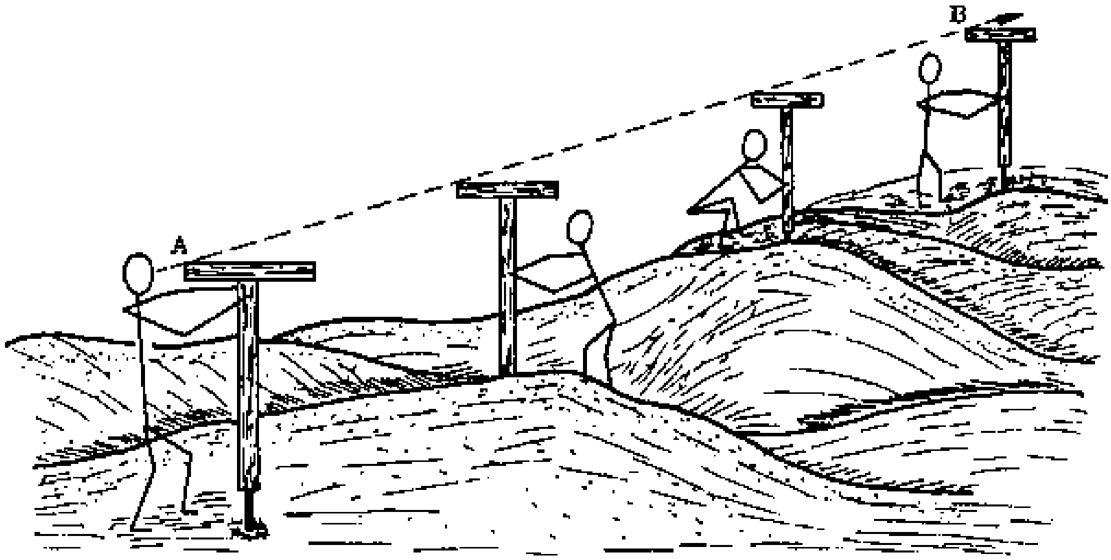

Fig. 5

NOTES:

Sloping sites

Setting out and measuring distances on sloping sites is simply the same procedure as explained in the section on uneven ground.

The work is carried out in steps (Fig. 1), with the line always held horizontally when measurements are taken.

The length of each section depends on how steep the slope is. The steeper the slope, the shorter the section, while slightly sloping areas allow longer sections (Fig. 1).

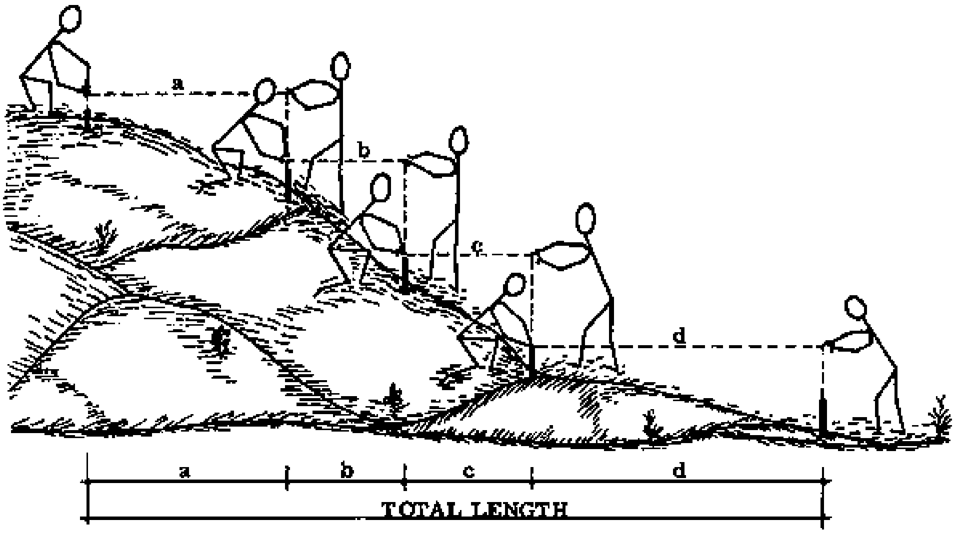

Fig. 1 MEASURING A DISTANCE ON A SLOPING SITE

The construction of a right angle according to the 3-4-5 method is the same on a slope, as long as all the lines involved are straight. To see that this is true, take your try square and turn it around in your hands. You will observe that whatever the position of the try square, the angle is always the same, because the sides of the try square remain straight.

Even on a site which slopes in two or more directions (Fig. 2) it is possible to construct a right angle as long as the lines are straight and do not touch the ground. The pegs may have to be different lengths, in order to keep the lines off the ground.

Keep in mind that on sloping sites all lines stretched between the pins do not represent the horizontal length (unless they are also levelled) but only the future positions and directions of the walls, etc. (Fig. 2, see also Figs. 1 to 4 on the previous page).

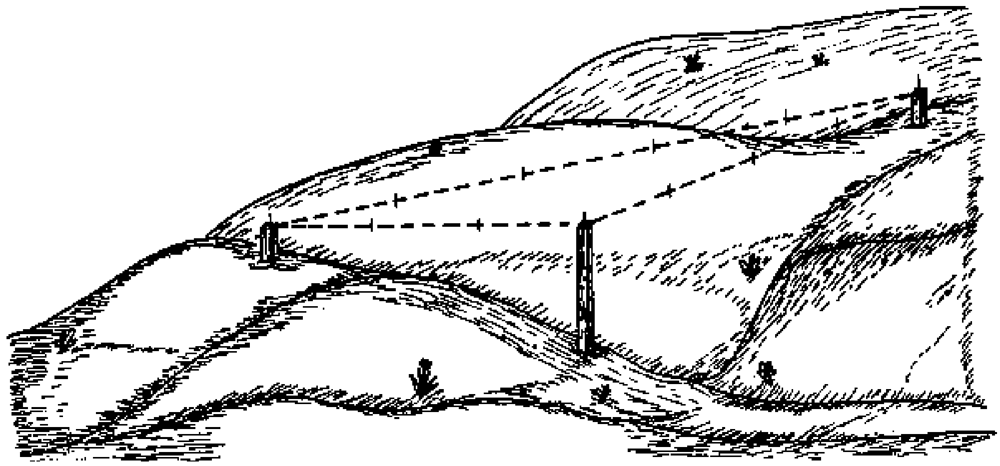

Fig. 2 3-4-5 METHOD ON A SLOPING SITE

The Rural Builder knows that the decision to build on a sloping site can have expensive consequences. There are some advantages such as easier sewage disposal, but the disadvantages are usually greater (Drawing Book, page 103).

NOTES:

Profiles

When the positions of the corners of the building are known, and the distances between them, then we can mark the positions and widths of the foundations as well as of the footings and plinth course.

This marking should be carried out in a relatively permanent way, so that it is accurate for a longer period. We do this by using profiles. A profile is a simple, temporary structure which maintains the correct locations of the various marks.

The profile consists of a board nailed flatwise on top of two pegs which are set in the ground, at a height of about 60 cm (Fig. 1). This height is necessary to lift the line well above the footings, so that later the plinth course can be marked from the profile.

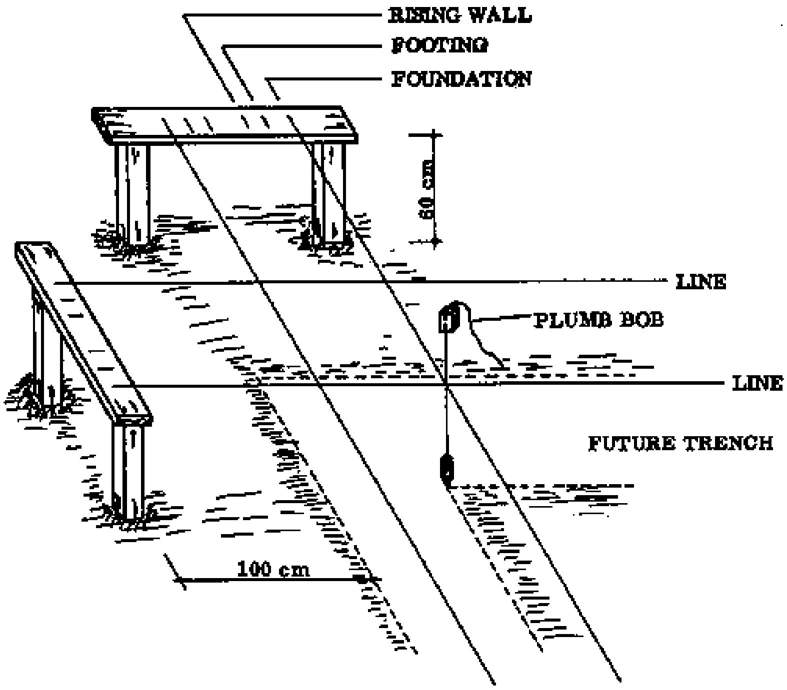

Fig. 1 MARKING THE POSITION OF THE FOUNDATION ON THE GROUND

If the soil is too hard to drive the wooden pegs into, then specially made iron pegs designed to receive a profile board can be used (Fig. 2). If these are not available, plain iron rods can be used, although they are less accurate since the lines are fixed directly onto the rods.

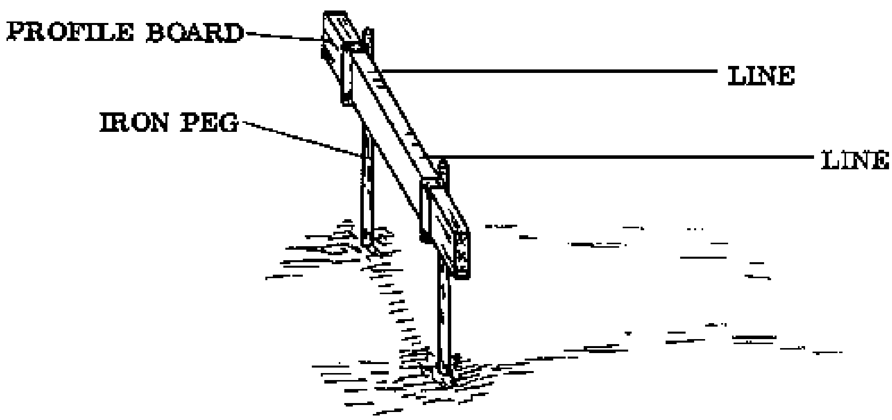

Fig. 2

At the corners of the building, two boards are used, to mark in two directions (Fig. 3). To mark off the dividing walls, one board is used at each end of the future wall (Fig. 3).

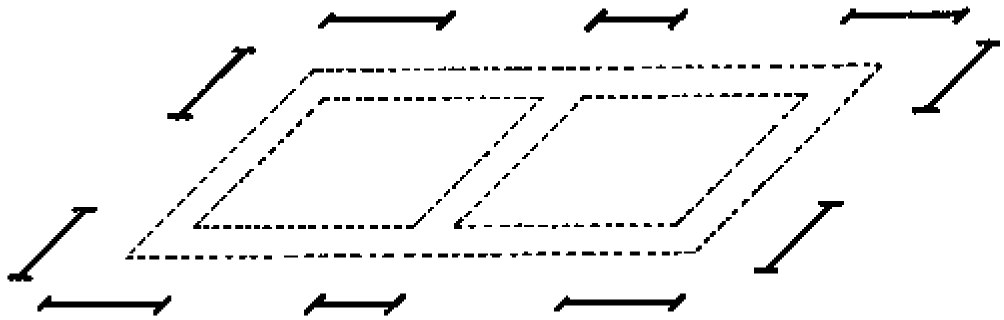

Fig. 3 POSITIONS OF THE PROFILE BOARDS

The profiles are erected at a distance of about 1 m from the outside edge of the foundation (Fig. 1). Permanent divisions are marked on the boards to indicate the width of the foundations and the thicknesses of the footings and rising walls. The marks may be either saw-cuts or short nails, so that lines can easily be fixed to them as they are needed.

The positions of the foundations are then marked on the ground by plumbing down from the lines stretched between the profiles (Fig. 1).

FOUNDATIONS

The stability of all buildings depends largely on the load-bearing capacity of the ground under them. As far as Rural Building is concerned, all hard soils are suitable for building. Soft soils, and those soils which become very soft and turn into mud when wet, are not suitable.

If a building is erected on the wrong kind of soil or if the foundations were constructed incorrectly, the building might settle unevenly, tilt or slide, or even collapse.

This can be avoided by selecting the right site for the building and by adapting the foundation construction to the soil conditions and the nature of the building.

Types of foundations

The most common forms for foundations in Rural Building are:

- SINGLE FOUNDATION: This is for columns, pillars and poles, if they are detached from the building (Fig. 1).

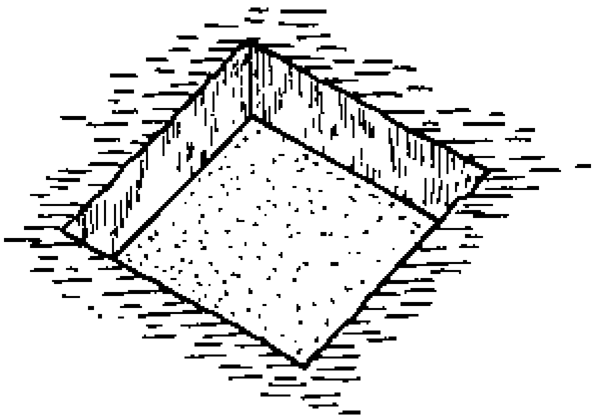

Fig. 1

- STRIP FOUNDATION: This is the most widely used foundation for walls (Fig. 2).

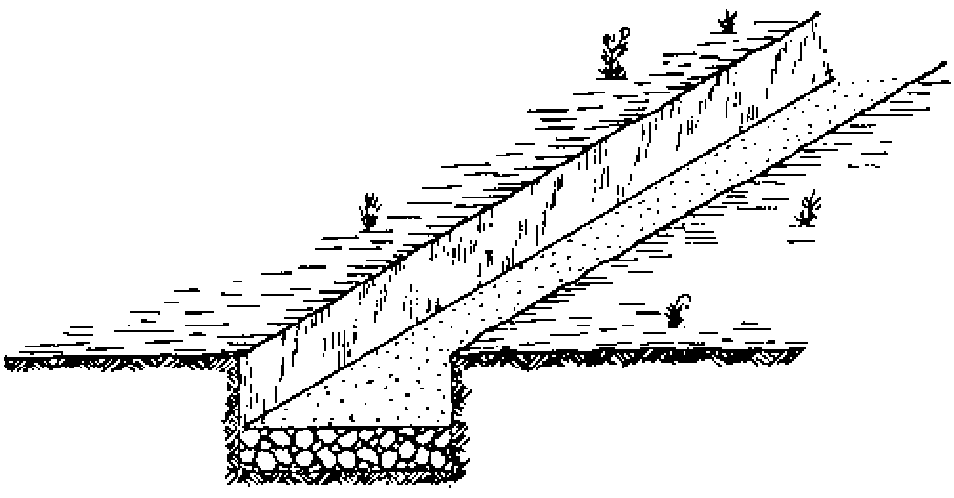

Fig. 2

- SLAB FOUNDATION: This is used for water tanks and septic tanks (Fig. 3).

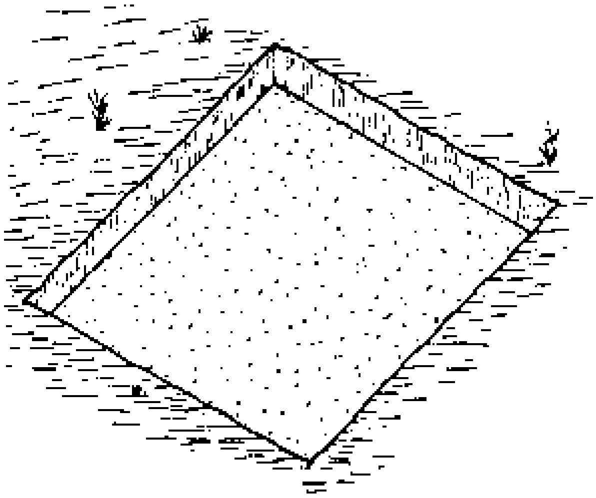

Fig. 3

- STEPPED FOUNDATION: On sloping sites the so-called stepped foundation must be used, which is in fact just a special form of the strip foundation (Fig. 4).

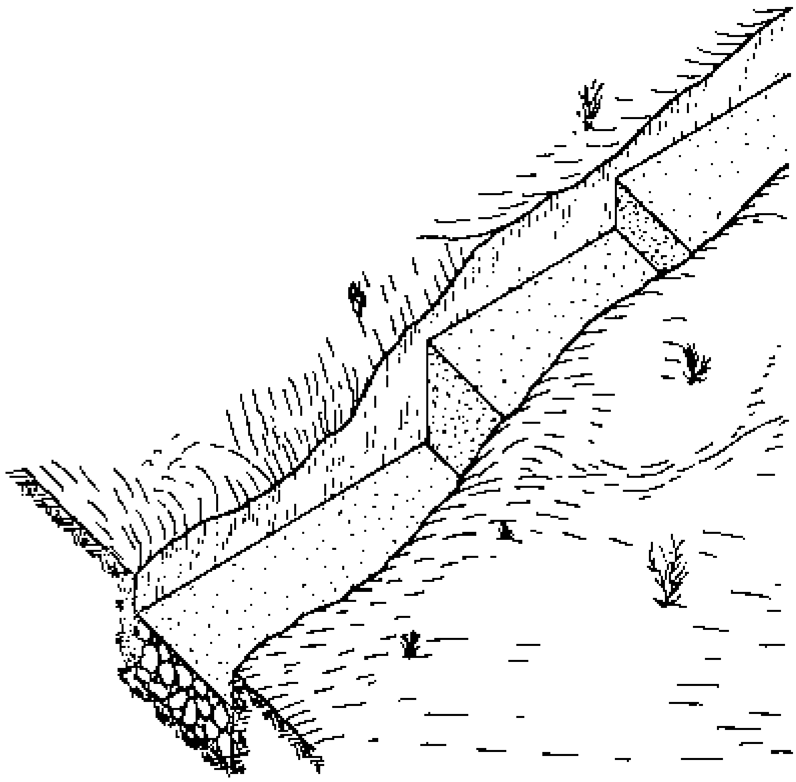

Fig. 4

NOTES:

Functions of the foundation

A foundation has to be constructed in a way that it can fulfill the demands that the building structure places on it. These are:

- To provide a solid, level base for the building
- To receive loads from the structure above
- To distribute the loads onto the ground over a larger area
- Thus, to prevent uneven settling of the building.

The above demands are met through the correct choice of dimensions, materials, and constructions for the foundation.

Dimensions for strip foundations

Many years of building experience in northern Ghana have proven that the dimensions for concrete foundations shown in Fig. 1 are sufficient, provided that the structure consists of only a ground floor and it is built upon firm soil.

A simple rule is: the depth of the foundation should be no less than the thickness of the rising wall; while its width should be no less than 3 times the thickness of the rising wall (Fig. 1).

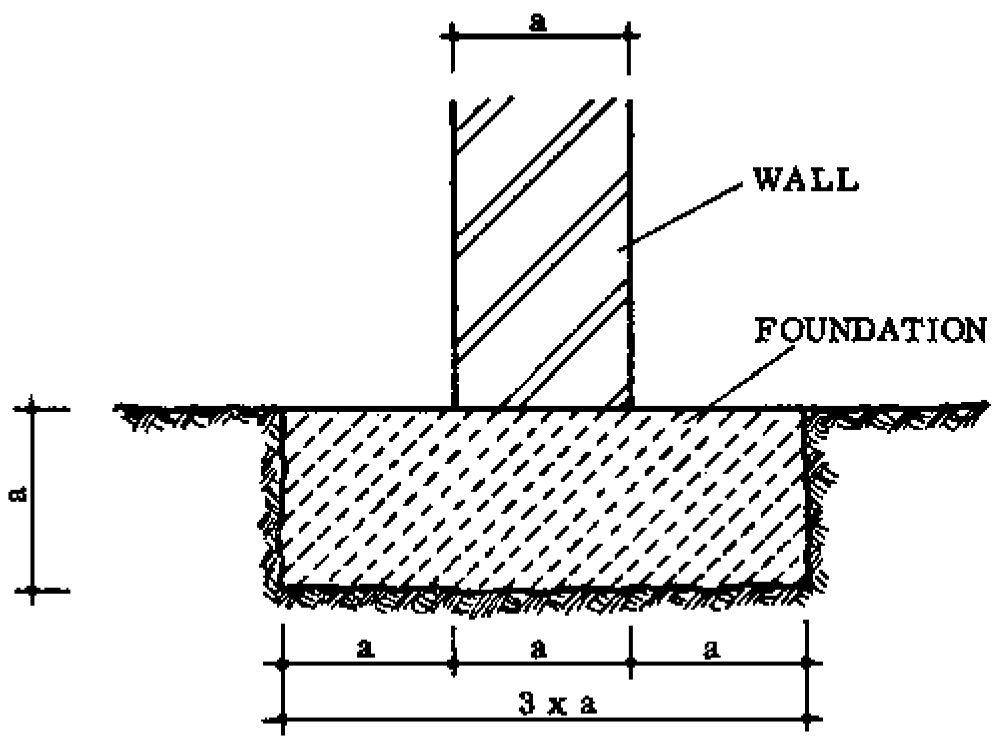

Fig. 1

Lower walls (not exceeding 2 m in height) which do not carry loads can be built on smaller foundations; these should be at least 30 cm wide and 15 cm deep (Fig. 2).

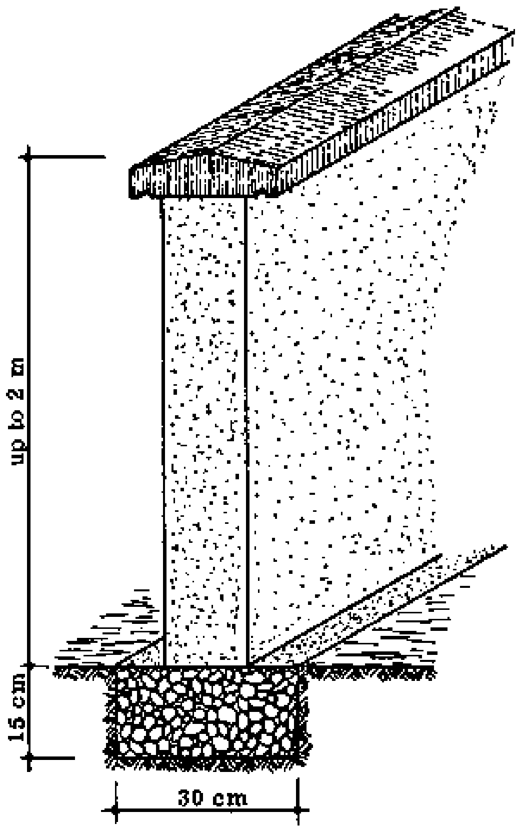

Fig. 2

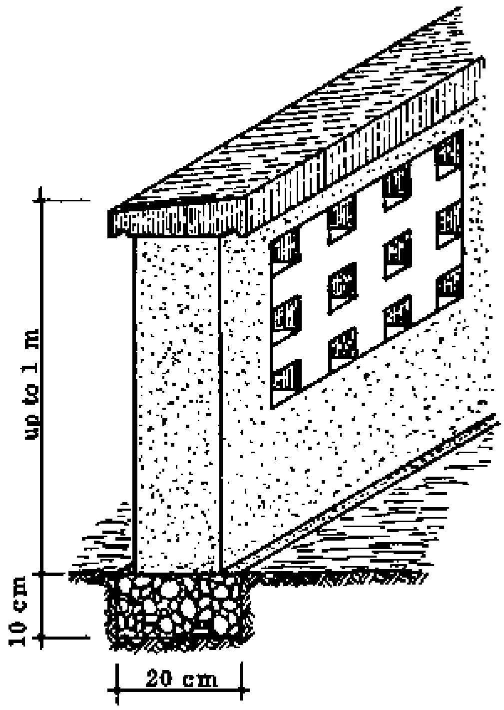

Fig. 3

Foundations which carry very low walls (less than 1 m high) such as decorative openwork screen walls enclosing verandahs, may be reduced to no less than 20 cm wide and 10 cm deep (Fig. 3).

NON-CONCRETE FOUNDATIONS

Although most foundations in Rural Building are made of concrete, there are situations where the choice of another material would be practical and economical. Some of the common alternatives to concrete foundations are:

- Rubble and boulder foundations
- Ashlar masonry foundations
- Laterite rock foundations
- Artificial stone (brick and sandcrete block) foundations.

In certain areas of the world, the first two types of masonry were formerly widely used: not only foundations but also footings, plinths and even rising walls were made out of stones. Due to the increased use of cement worldwide, and the improved concrete technology, stone masonry became uneconomical to build with because it takes more time and labour. Eventually the use of some of these types of masonry disappeared.

However, cement can be very expensive and it makes sense to return to the use of local materials when possible.

Rubble and boulder foundations

This kind of foundation is preferred on stony sites where rubble, rocks and boulders are found in large quantities, and where the soil is firm enough to permit its use.

This foundation saves building materials such as cement and timber for formwork, but it takes more time to construct and requires some skill.

As shown in Fig. 1, as far as possible very large stones are used, and the spaces that remain between them must be filled up with spalls. Spalls are smaller stones used to fill up the voids left in boulder masonry, in order to save cement mortar.

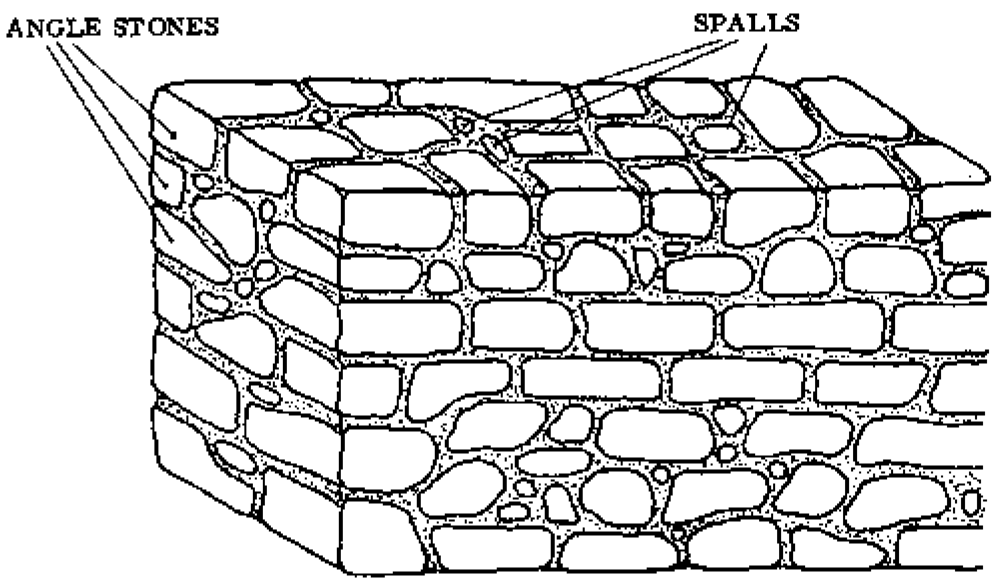

Fig. 1

The stones are used in their raw state, but the boulders forming the quoin should be shaped a bit more regularly to form a secure corner bond. The first course is laid in mortar, not directly onto the bare ground. It is usually impossible to construct regular courses because of the irregular shapes of the stones.

If the foundation is made of a porous rock like laterite rock, it is advisable to plaster both the inside and outside faces to prevent dampness from penetrating. Otherwise only the outside face is plastered.

The excavation for the trench is made a little wider than the foundation (Fig. 2) so that the plaster can be applied right down to the bed of the first course. Coarse gravel or broken stones can be used later to refill the space when the plastering is finished. This prevents the erosion of soil along the foundations, especially under the eaves of an overhanging roof.

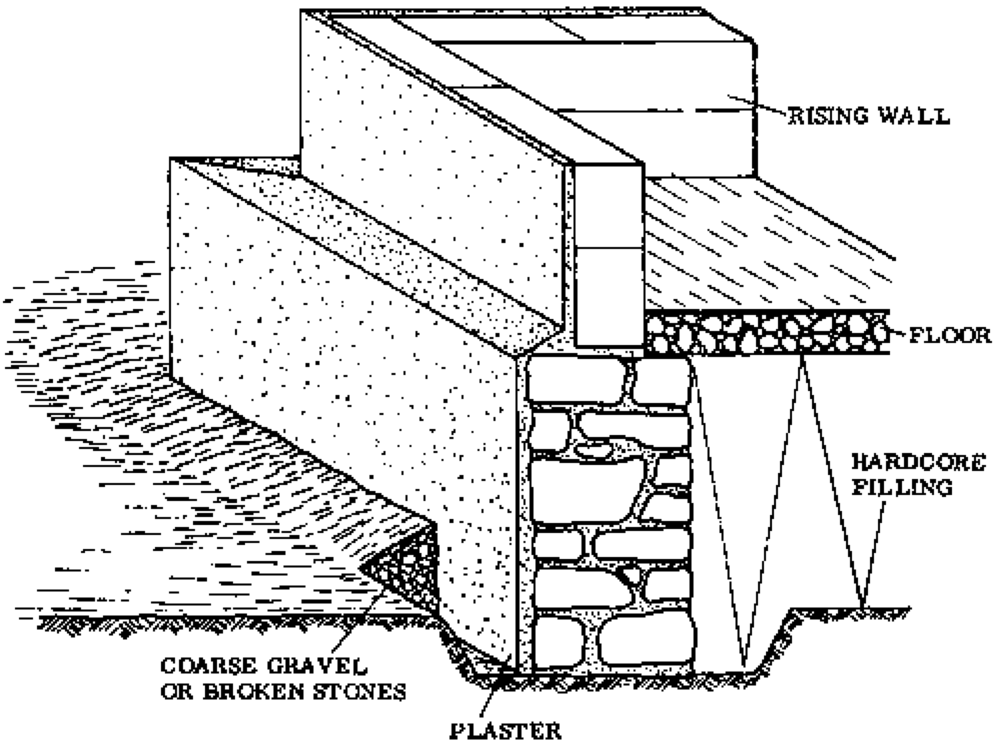

Fig. 2

NOTES:

Ashlar masonry foundations

In this type of masonry, the stones are “dressed” before they are used in the structure. To dress stone means to cut and shape it, and it is done to make the stones fit together better. There are four different types of ashlar masonry, depending on how much dressing is done and how the stones are put together. These are:

- Rough stone masonry
- Hammer-dressed ashlar masonry
- Broken range masonry
- Range masonry.

These are listed according to the increasing amounts of stone dressing and stone arrangement required for each method.

- ROUGH STONE MASONRY: This sort of masonry consists of natural stones which are shaped only slightly along their bed faces, or not shaped at all. As in boulder masonry, regular courses are not seen because of the irregularly shaped stones (Fig. 1).

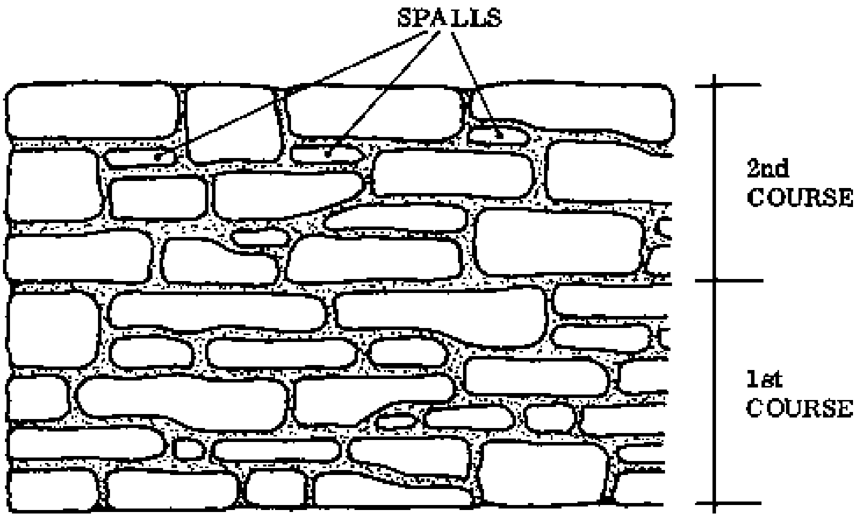

Fig. 1 ROUGH STONE MASONRY

- HAMMER-DRESSED ASHLAR MASONRY: As the name implies, the stones used for this type of masonry are roughly shaped with a hammer, so that the stretcher and header faces are approximately square to each other.

The stones are laid in regular courses but the thickness of the stones may vary within one course (Fig. 2).

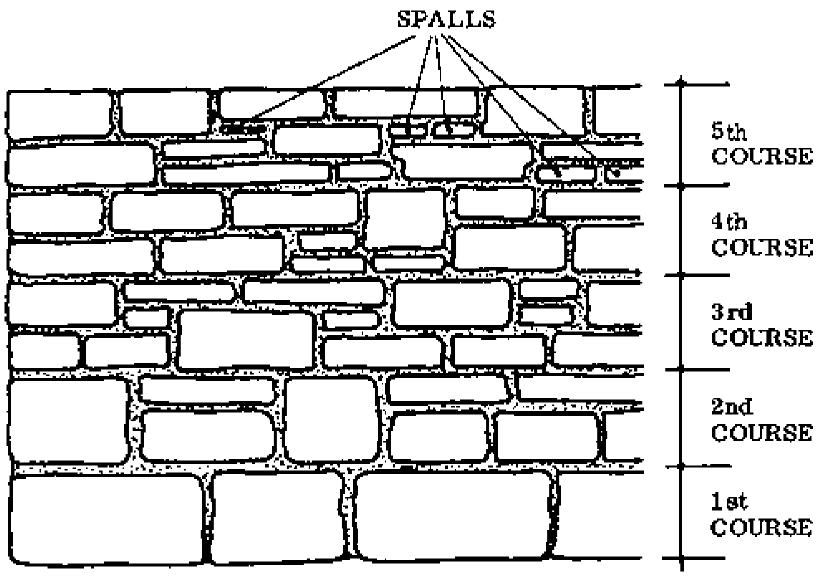

Fig. 2 HAMMER-DRESSED ASHLAR MASONRY

NOTES:

- BROKEN RANGE MASONRY: The stones of this masonry are accurately shaped with the club hammer and cold chisel (Reference Book, page 15) so that all the faces are square to each other. The bond should not contain joints more than 3 cm thick. The height of the stones may vary within a course, and the height of the courses may also vary, with the result that the courses are continuous for only short distances (Fig. 1).

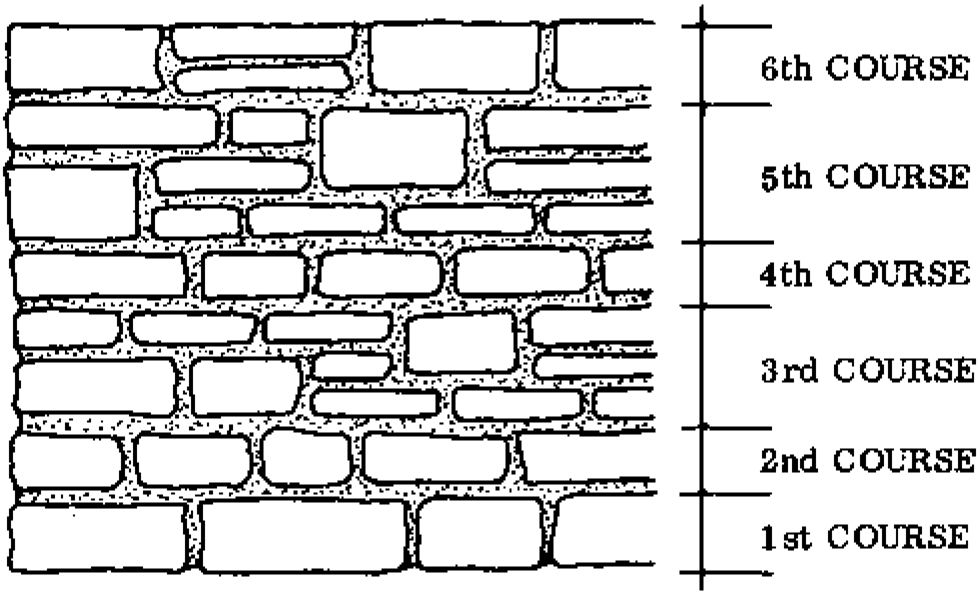

Fig. 1 BROKEN RANGE MASONRY

- RANGE MASONRY: The accurately squared stones are laid in courses, and each course is uniformly thick throughout its length. However, the courses are not all necessarily all the same thickness (Fig. 2).

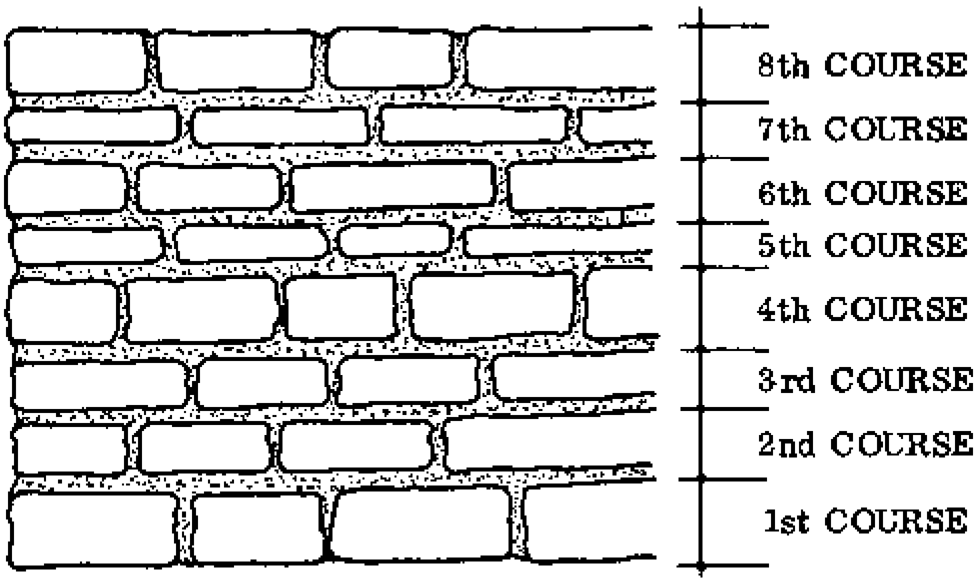

Fig. 2 RANGE MASONRY

Bonding principles

The following rules are observed for all four ashlar masonry techniques, regardless of how much dressing is done on the stones.

- Observe the structure of the rock, and if possible lay the stone in the way it has “grown”. For example, if the stone appears to have horizontal layers, it should be laid so that the layers are flat.

- Never lay stones edgewise.

- The stones should overlap each other as far as possible; avoid making any continuous cross joints between two courses (Fig. 3).

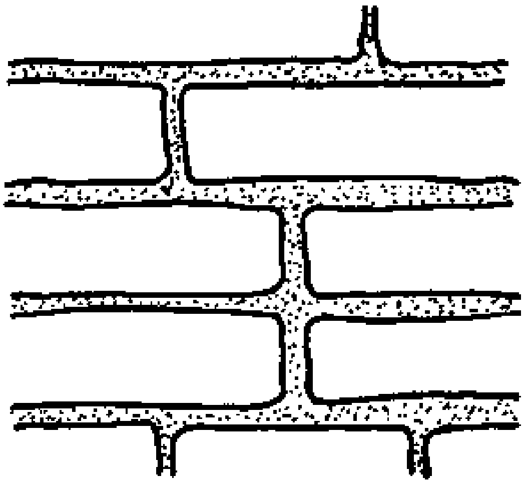

Fig. 3 WRONG!

- Also avoid making a group of continuous cross joints in one course (Fig. 4), as this creates an unpleasant appearance and an impression of a separation. A better arrangement is shown in Fig. 1.

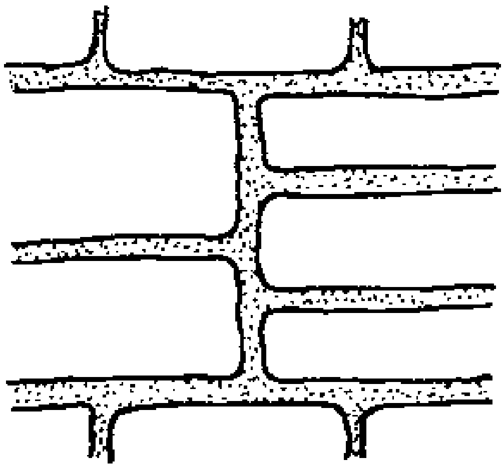

Fig. 4 WRONG!

- Fill up the bigger voids between stones with spalls, to save mortar.

- If ashlar masonry is used as a foundation, the first course is always laid in mortar, not directly on the ground.

- In case the foundation is combined with the footings and the plinth course, all ashlar masonry must be coursed and levelled at a height not exceeding 1,5 m, and preferably every 50 cm.

NOTES:

Laterite rock foundations

Many areas of northern Ghana offer the opportunity to work with a highly suitable building material; namely laterite rock.

In structure and colour it appears similar to laterite soil, and although it is rather porous and comparatively soft when freshly dug from the earth, it gradually becomes hard and rock-like when it is exposed to the air.

Laterite stone has been used for many sorts of masonry because it is readily available, easily shaped, and strong.

Its only disadvantage compared with concrete is that it takes time to excavate the stone and shape it into blocks.

However, taking all the factors into consideration, there are some cases where laterite rock represents the most economical choice for building material.

Although the stone can be given any convenient shape, the dimensions of blocks made from laterite stone should preferably be 14 x 30 x 46 cm, which allows proper bonding with all sorts of masonry. Accordingly, the dimensions of half-blocks are 14 x 30 x 22 cm; for 3/4 blocks, 14 x 30 x 34 cm; and for 1/4 blocks, 14 x 30 x 10 cm (Fig. 1).

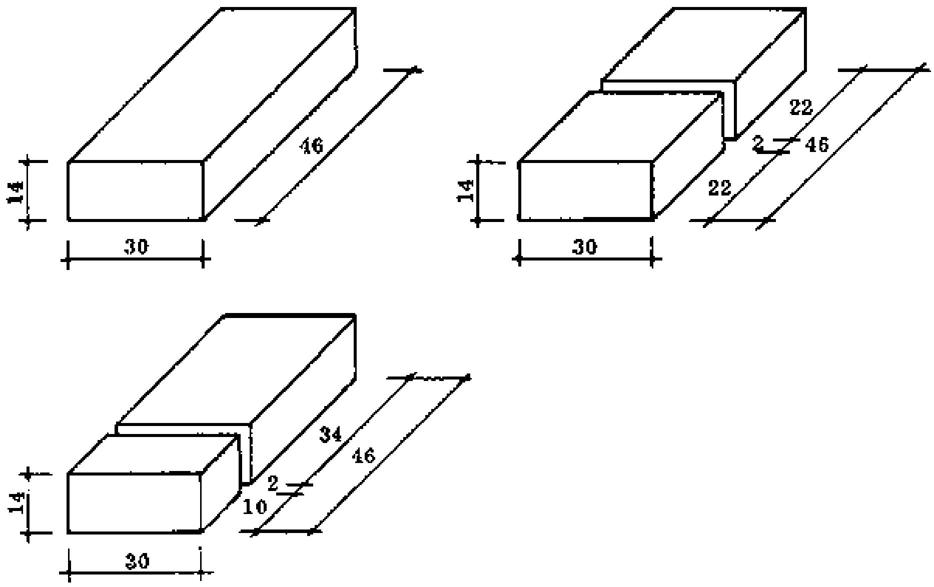

Fig. 1

When blocks of laterite stone are used for footings, they are laid in stretcher bond, flatwise, which results in a footing which is 30 cm thick instead of 23 cm when sandcrete blocks are used (Fig. 2).

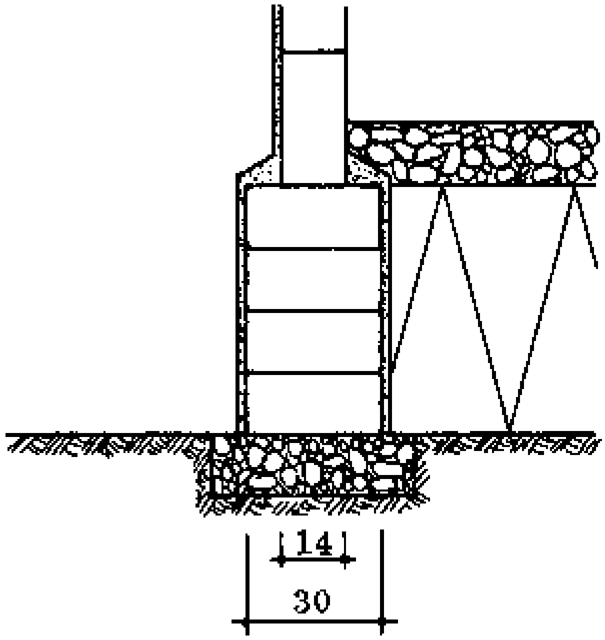

Fig. 2

Foundations can be built out of laterite stone blocks; the blocks are laid in header bond, with a minimum of two flatwise courses (Fig. 3). Foundation and footings can be combined as shown in Fig. 4, which allows the erection of stronger outside walls.

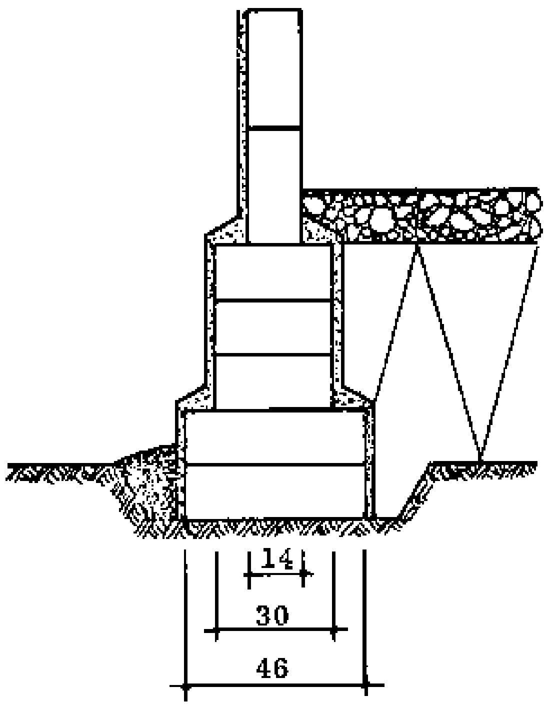

Fig. 3

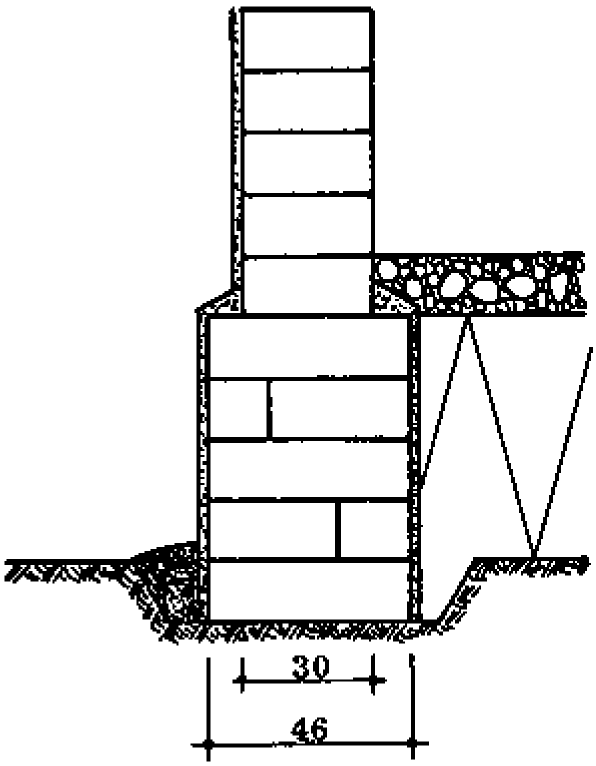

Fig. 4

Since the laterite stone is porous, the foundations should be plastered on both the inside and outside faces.

NOTES:

Artificial stone foundations

As far as Rural Building is concerned, there are only two artificial stone products of importance for foundations: bricks and sandcrete blocks.

Both products are seldom used for foundations in northern Ghana. We don't use bricks because, while the clay is available to make them, it would take too much firewood or other fuel to fire the bricks. Concrete or laterite stone blocks are usually more economical to use than sandcrete blocks.

- BRICK FOUNDATIONS: Brick is one of the oldest known artificial stones; it is made from clay which is shaped, dried, then fired in a kiln. The usual dimensions of a brick are 7,1 x 11,5 x 24 cm, a size which results in a masonry containing many joints, but which allows the construction of most complicated bonds.

Foundations made out of bricks must be at least 5 courses high and carefully laid in cross bond or English bond (Fig. 1). Note the different arrangements of the alternating courses.

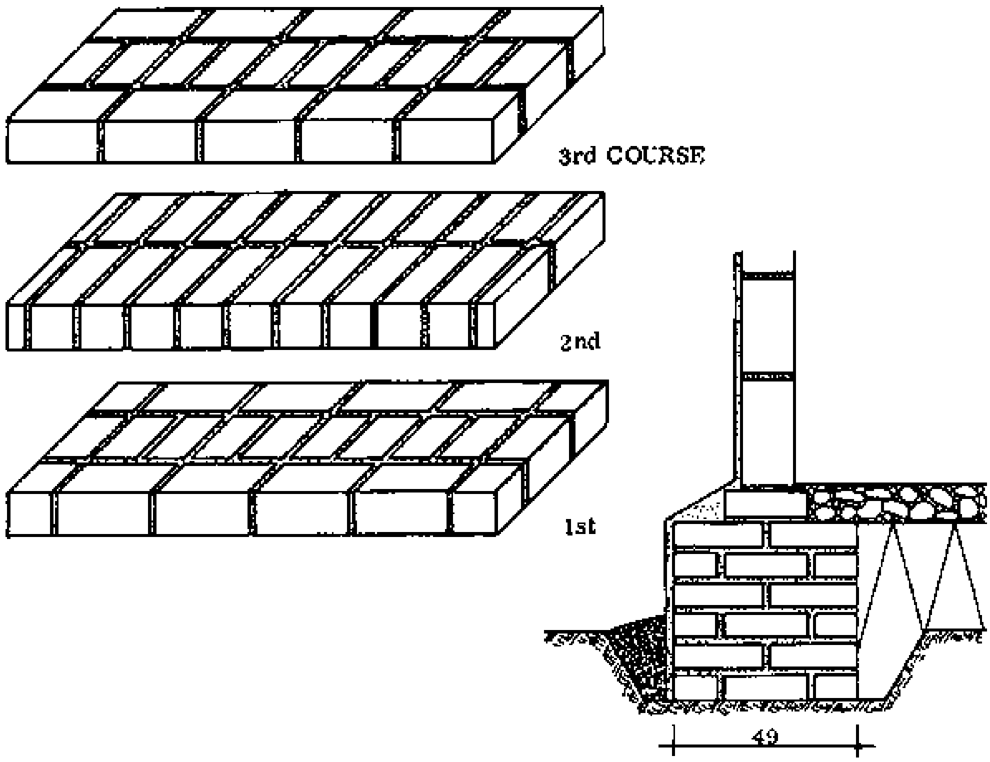

Fig. 1 BRICK FOUNDATION

- SANDCRETE BLOCK FOUNDATIONS: In an area where there is a lot of sand available but no broken stones, gravel or laterite rock, etc., one may be forced to use sandcrete blocks to build the foundations. The mix proportion for these blocks should be no less than 1:8, and the blocks themselves should be laid in header bond, as seen in Fig. 2.

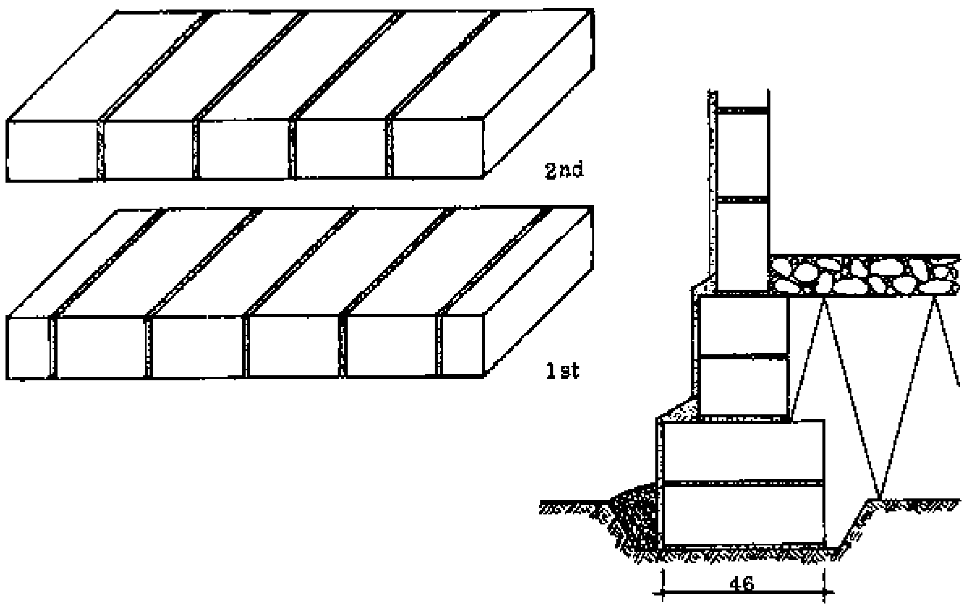

Fig. 2 SANDCRETE BLOCK FOUNDATION

NOTES:

CONCRETE FOUNDATIONS

Excavating the foundation trenches

After the setting out is complete, including marking the positions and widths of the foundations on the ground, the lines are removed from the profiles or pins and the excavation work is started.

All the topsoil and as much as possible of the soft soil and light soil is removed, and brought to a place where it can either be used immediately or kept for a future dry season garden.

In most cases soils of a firm consistency and good load bearing capacity are found at depths ranging from 15 to 25 cm, which is deep enough for the construction of foundations for a rural dwelling place (Fig. 1).

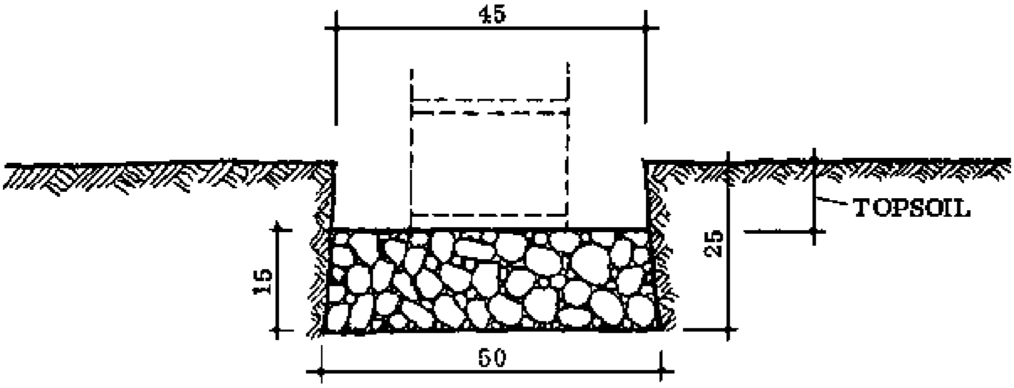

Fig. 1

There are of course exceptional cases where the rock is close to the surface, or even at the surface, which makes the work easier; or the opposite situation of very deep soft soil, which is a problem.

In areas where there is light or heavy rock close to the surface, the thickness of the foundation can be reduced, but to no less than 5 cm thick. The surface of the rocks should be roughened if necessary to provide a good grip, and cleaned before the concrete is cast. These areas are usually rich in stones, so one should check out the possibility of making boulder foundations. The boulder foundations can also be carried out as a stepped foundation if necessary, following the contours of the rocky surface (Fig. 2).

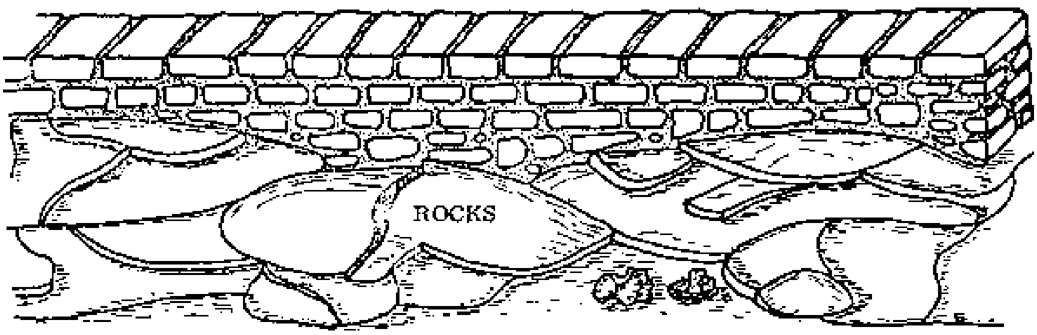

Fig. 2

Very deep soft soil is a problem, and it requires special measures. In general, all excavations should be continued until a layer of good firm soil is found. When a depth of 60 cm is reached and the soil is still too soft, the excavation work is stopped.

Instead of digging deeper, widen the trench to at least 60 cm. This increases the total area on which the structure rests, with the result that the pressure on the soil underneath is distributed over a wider area.

Fig. 3 shows that the thickness of the widened foundations must be increased to 30 cm, because of how the foundation material distributes the pressure of the wall above.

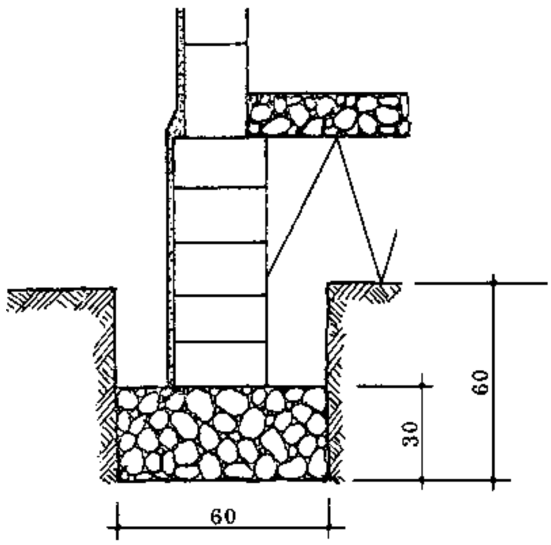

Fig. 3

In order to save concrete, put bigger stones, rubble or boulders into the foundation; it should preferably be flush to the ground surface (Fig. 4).

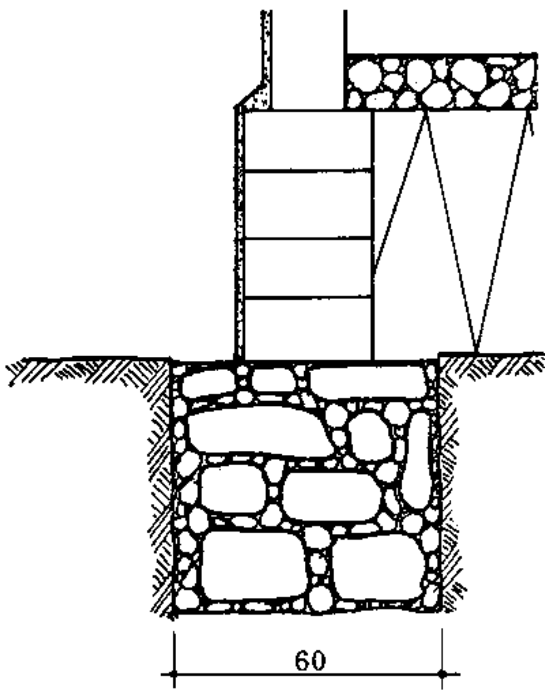

Fig. 4

- SOFT POCKETS: During the excavation work it sometimes happens that the character of the soil changes unexpectedly: spots or pockets of soft soil are found in the firm soil. These may be natural deposits or man-made holes that have gradually filled in. The load bearing capacity of the soil is reduced in these places.

If the area is relatively small and runs across the trench, it is advisable to reinforce the concrete foundation covering the pocket with a network of crossed iron rods (Fig. 1). The rods should be long enough to bridge the soft part and project past it on both ends to anchor securely in the foundation which is supported by firm soil.

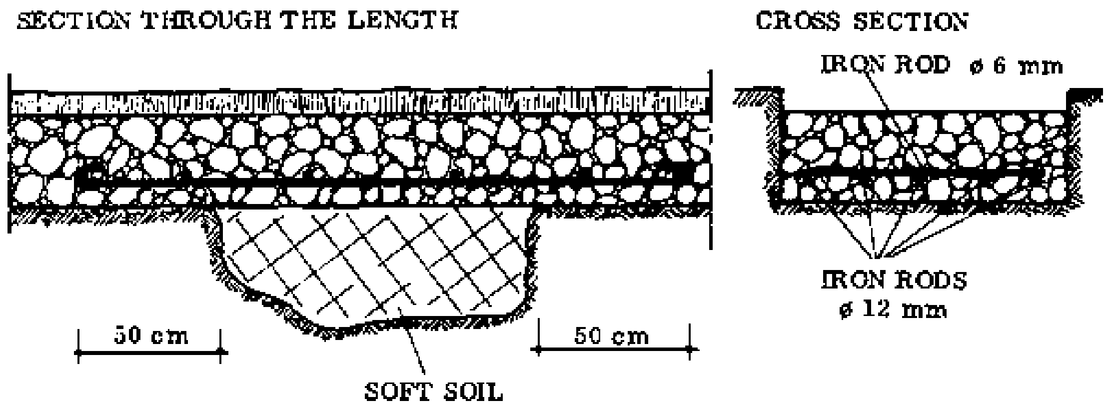

Fig. 1

In case the area is too wide to be reinforced in this way, the soft soil is removed and the hole is refilled with compacted layers of boulders, stones, and sharp sand; or with concrete, thus improving the load bearing capacity (Fig. 2).

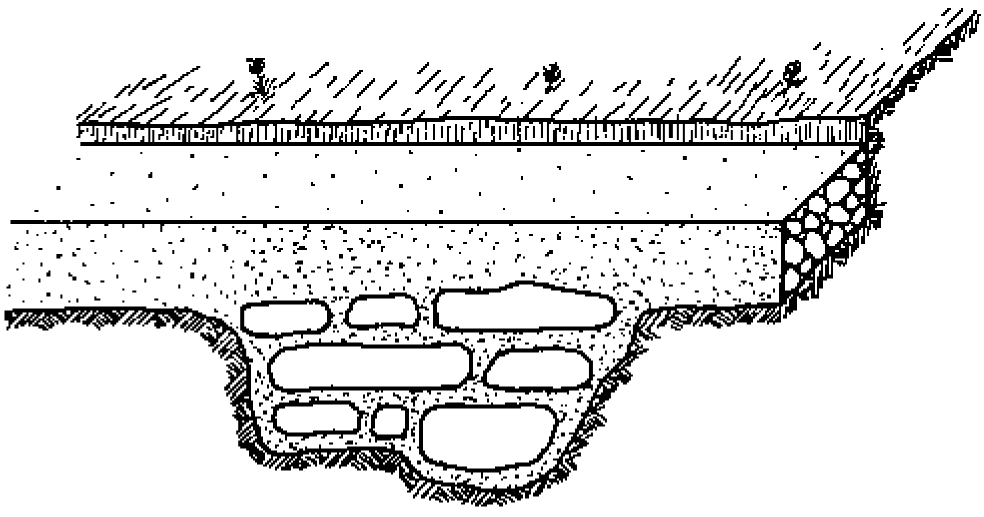

Fig. 2

When the foundation has to cross a very wide section of soft soil, that section of the foundation has to be made wider and deeper than the rest (see the previous page).

- SHAPE OF THE TRENCHES: Although it is generally accepted that the ideally shaped foundation trench has walls that are at right angles to the levelled bot tom of the trench (Fig. 4), it is often observed that unskilled or even skilled workers tend to dig trenches which are incorrectly shaped. Special attention should be given to this problem during excavations in harder soils, because the more difficult the digging, the more likely it is that incorrectly made trenches will result (Fig. 3).

Fig. 3

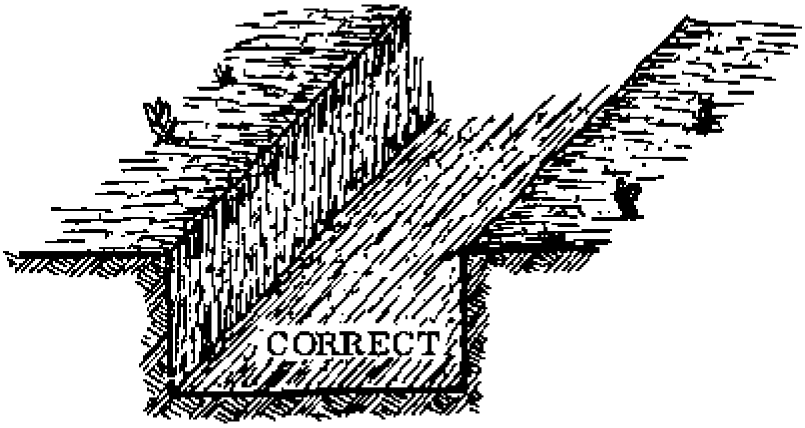

Fig. 4

Experience has shown that it is best to ask the workers to make the trenches a bit wider at the bottom, to ensure that the minimal width of the foundation is maintained everywhere (Fig. 5).

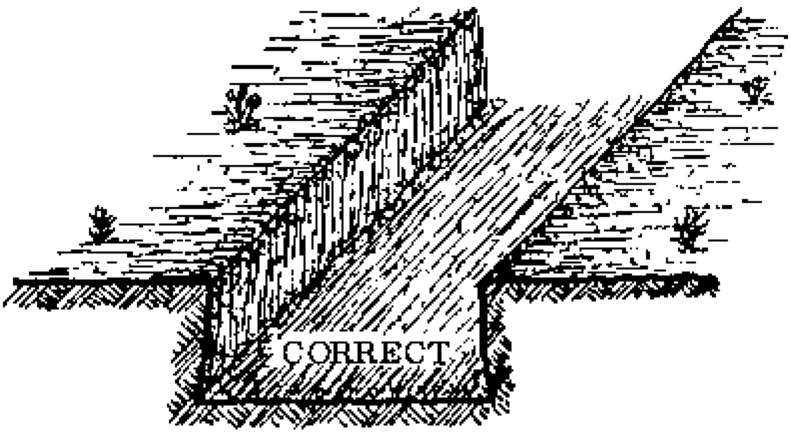

Fig. 5

NOTES:

Measurements of stepped foundations

The number, length and height of the steps in the foundation depend on the shape and steepness of the ground contours. To make it easier to construct the footings later and to save materials, the skilled builder will adapt the length and height of the steps to fit with the type of blocks that will be used for the footings.

Fig. 1 shows a common stepped foundation made of concrete, and footings built of sandcrete blocks. It can be seen that the concrete thickness is 15 cm throughout, while the steps are different lengths.

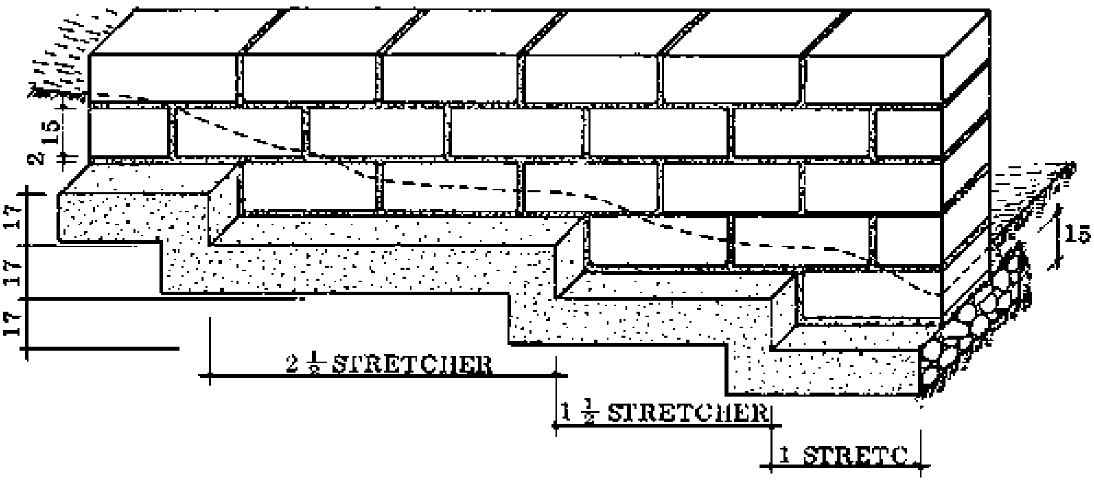

Fig. 1 STEPPED FOUNDATION WITH SANDCRETE FOOTING

- HEIGHTS OF THE STEPS: The height of each concrete step is always the thick ness of a sandcrete block, plus the thickness of the mortar bed; making 15 cm plus 2 cm equals 17 cm.

In case the steps have to be steeper, the height of the step is always a full multiple of 17 cm: 34, 51 cm, etc. so that 2 or 3 courses of sandcrete blocks can fit on the step (Fig. 2).

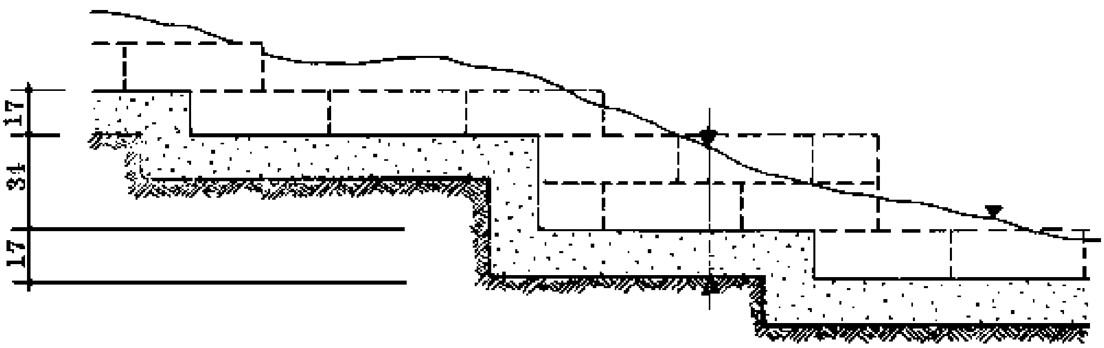

Fig. 2 STEPPED FOUNDATION WITH 2 COURSES ON ONE STEP

- LENGTHS OF THE STEPS: All masonry is supposed to be built in half-block bond. Accordingly, the minimum length of a step is half a block plus the joint: 22 cm plus 2 cm equals 24 cm; or for longer steps, a full multiple of this: 48 cm, 72 cm, 96 cm and so on.

If the foundation is to be constructed with laterite stone blocks (Fig. 3), the height of one step is reduced to 16 cm, that is 14 cm for the block plus 2 cm for the joint. The lengths of the steps are the same as for sandcrete blocks.

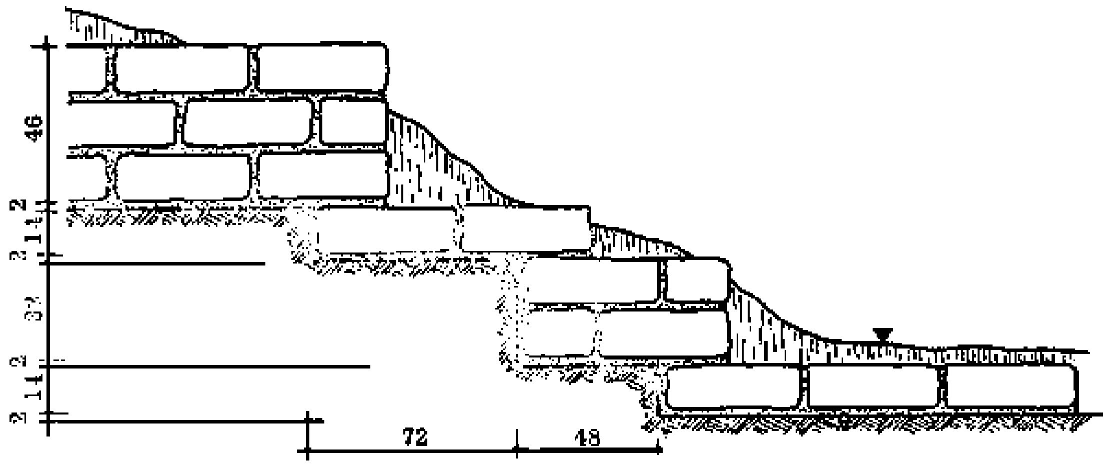

Fig. 3 STEPPED FOUNDATION WITH LATERITE STONE

The actual construction of a stepped foundation and its footings must always be started from the lowest step, to prevent bonding mistakes.

NOTES:

Levelling the trenches and marking the foundation depth

The bottoms of all foundation trenches must be perfectly level, not only in the length but also across the width. Otherwise the building may settle unevenly, which can cause cracks in the structure or even a complete collapse.

This is why a foundation on a sloping site must be constructed in steps (Fig. 1) instead of taking a course parallel to the slope of the ground.

An improperly constructed foundation can result in a building that is a danger to the people living in it, and also a possible loss of valuable property.

When the trench has been excavated and roughly levelled, the next step is to determine the depth of the foundation concrete and at the same time, to level the bottom of the trench more exactly.

This is done by inserting iron or wooden pegs in the trench so that they project from the bottom by a distance equal to the depth of the foundation (Fig. 1). The distance between the pegs should be no further than the straight edge can bridge, so that it is possible to level between them using the straight edge and spirit level. Trenches can be levelled more accurately over longer distances by using the water level.

The triangular pattern of the pegs is necessary to obtain a level surface: if the distances A-B and B-C are level, then A-C must also be level (Fig. 1).

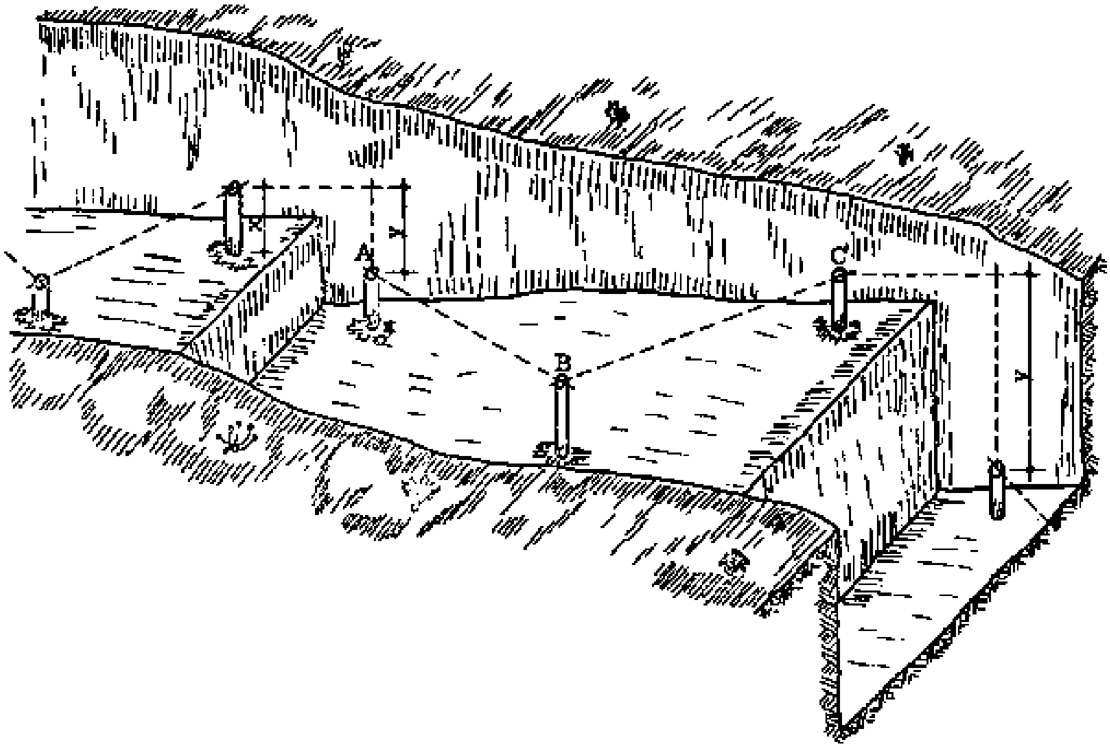

Fig. 1

x = DEPTH OF FOUNDATION CONCRETE
y = HEIGHT OF STEPS (BLOCK PLUS JOINT)

NOTES:

When the tops of the pegs are level, we can measure how far each peg sticks out from the bottom of the trench, and thus check whether the trench bottom is also level. High areas are skimmed off with a shovel, while hollows are filled with concrete. Never refill hollow areas with excavated soil, as this might lead to uneven settling of the foundation.

NOTES:

Mix proportions

The correct mix proportions for foundation concrete should generally be determined through the calculations of an engineer. Since this is usually not possible in Rural Building, the Rural Builder can decide the mix proportion with the help of the Tables of Figures, Reference Book, page 234. The data given there and the following hints are approximate values and are intended as a guide. The general range for the mix is from 1:10 to 1:15.

- For small projects like single dwellings, stores, etc., a mix proportion of 1:15 is sufficient because the total weight on the foundation is not so great.

- Bigger buildings like two-storeyed houses, halls or churches require a better mix proportion of 1:12.

- Elevated water storage tanks, bell-towers and other large heavy structures should be based on foundations mixed in a proportion of 1:10.

Preparations before casting

If the ground is dry, the foundation trenches have to be wetted down before the concrete is cast. This helps to reduce the absorption of moisture from the concrete by the soil. Take care that the sides of the trenches are also thoroughly wetted.

After the foundation concrete is mixed (Reference Book, pages 161 to 163), it has to be transported to the trenches, either in buckets, headpans or wheelbarrows. All transportation of the concrete has to be done without too much delay or vibration, as this could lead to the aggregates becoming separated. If wheelbarrows are used, the paths should be covered with boards to reduce vibration and to make it easier to push the wheelbarrows.

It is a good idea to provide a wheel stop (Fig. 1) beside the trench. This helps to ensure that the concrete is emptied right in the middle of the trench and does not take along dust and dirt from the sides of the trench. A board can be used to protect the opposite side of the trench (Fig. 1). This is not necessary when the concrete is picked up with a shovel from the wheelbarrow.

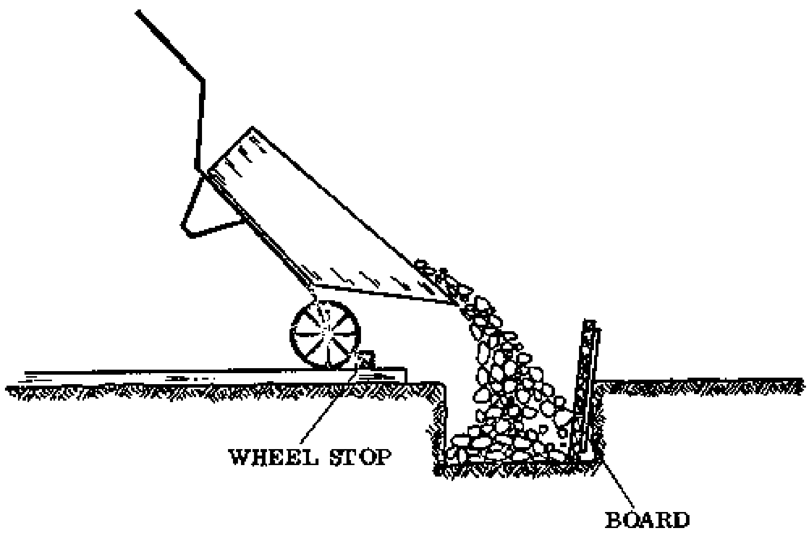

Fig. 1

NOTES:

The containers in which concrete is transported should be kept wet, so that no concrete sticks to the container when it is poured.

NOTES:

Casting

The concrete must be cast systematically so that the compacting and levelling follow immediately after it is poured in the trench. The headpan loads or wheelbarrow loads are deposited in an orderly way, not just dumped anywhere in the trench (Fig. 1).

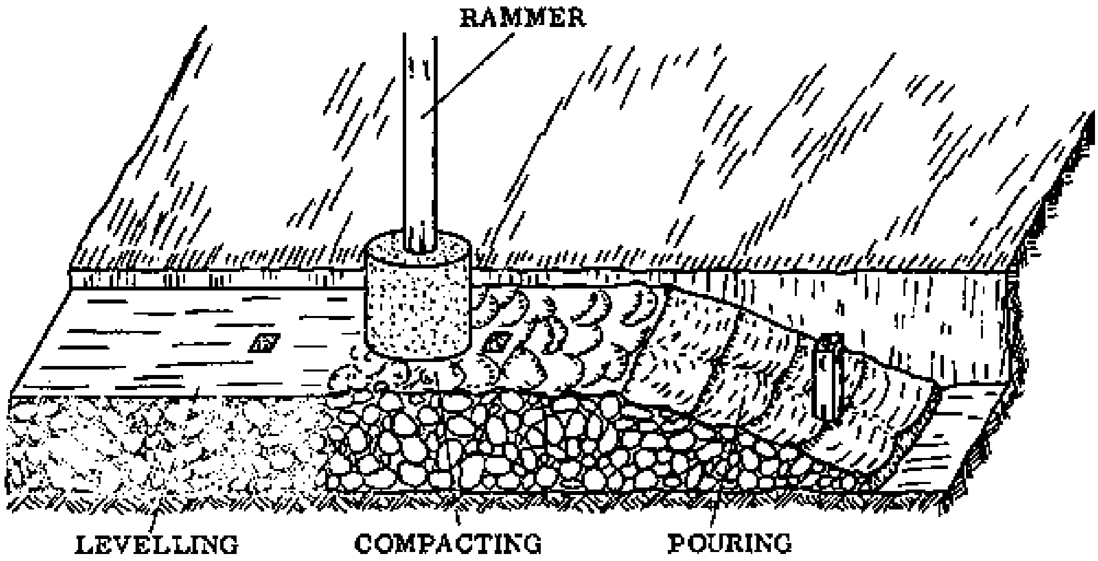

Fig. 1

Do not cast foundation concrete in sections with spaces in between, as this can lead to disturbances of the hardening process when the gap is filled up later. Always start from the far end of the trench and work your way closer to the mixing area. Two groups of workers can cast foundations on different sides of the building at the same time.

- COMPACTION: The concrete must be well compacted so that no air voids re main. Since foundation concrete has a rather stiff consistency, to compact it requires the use of heavy rammers (Reference Book, page 19).

The concrete is applied in layers no more than 15 cm deep, and each layer is compacted with the rammers. Pay special attention to compacting the corners and the outside edges. Stiff concrete should be compacted until its surface becomes wet.

Do not be tempted to compact the concrete just roughly, or to add water to ease the work. The production of a good foundation is a hard job, but only hard work will result in a good quality foundation.

- STEPPED FOUNDATION: In casting the vertical parts of a stepped foundation, pieces of board are used as shown in Fig. 2. These are fitted into recesses cut in the side of the trench. The width of the board is the same as the height of the step (Fig. 2).

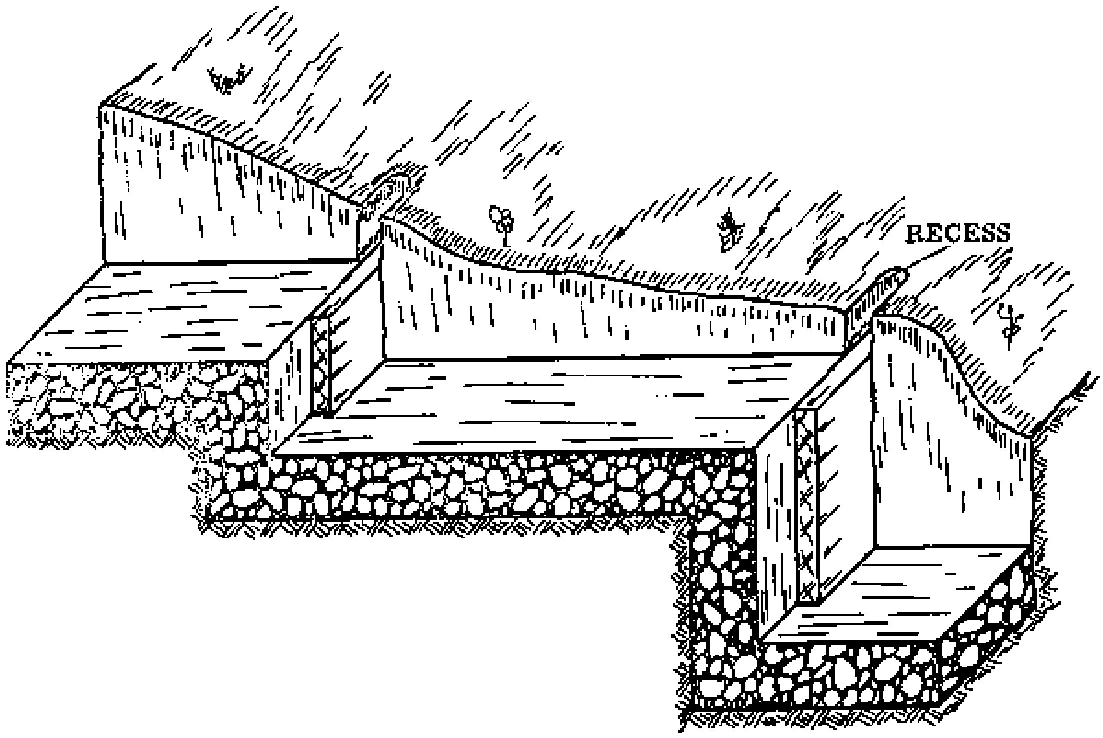

Fig. 2 CASTING A STEPPED FOUNDATION

NOTES:

Levelling the foundations

As soon as the foundation is compacted, the top has to be levelled flush with the top of the pegs. For this purpose a strike board is used.

If the compaction has been carried out correctly, the levelling should be fairly easy as there is not much concrete left to strike off.

All wooden pegs have to be removed and the holes filled with concrete, while the iron pins may remain if these were used.

As soon as the hardening process starts, as can be seen by the dull and dry looking surface, the area where the footing course will be set must be slightly roughened with the blade of a trowel, to provide a good grip for the mortar (Fig. 1).

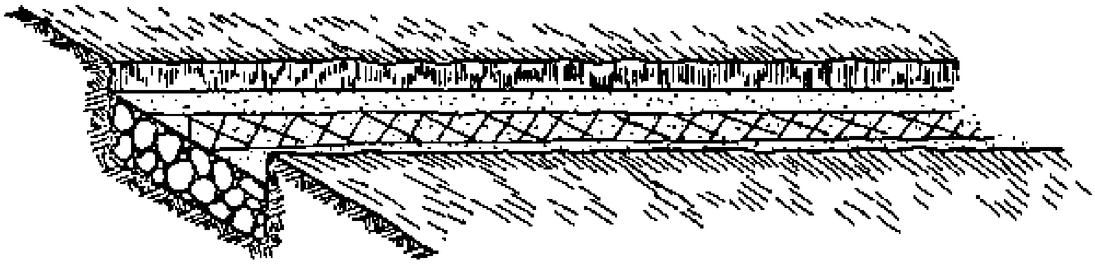

Fig. 1

Curing

If the concrete is disturbed during the hardening process, serious defects may be produced.

Freshly cast concrete must therefore be covered with empty cement bags, straw, mats, boards or moist sand to protect it against:

- The rain, which can wash out the cement paste, leaving the non-bound aggregate behind (Fig. 2).

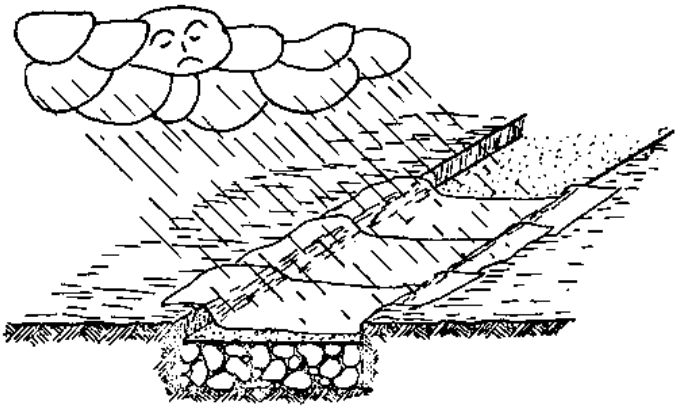

Fig. 2

- The sun, which can "burn" the surface of the concrete, so that although the concrete looks cured, under the surface it has not set hard enough (Fig. 3).

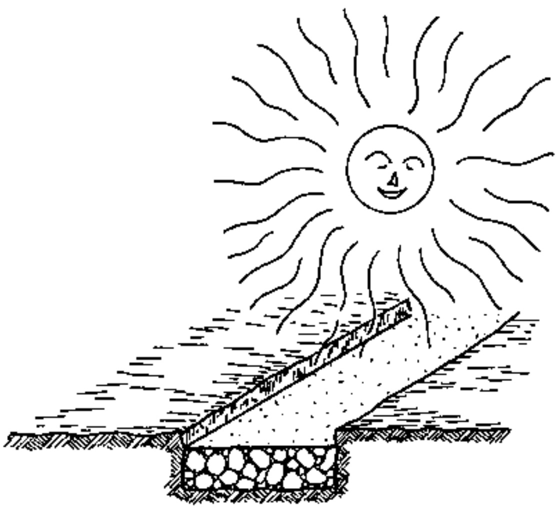

Fig. 3

- The wind, which can dry up the surface, resulting in cracks due to excessive dryness and shrinkage: especially during the harmattan season (Fig. 4).

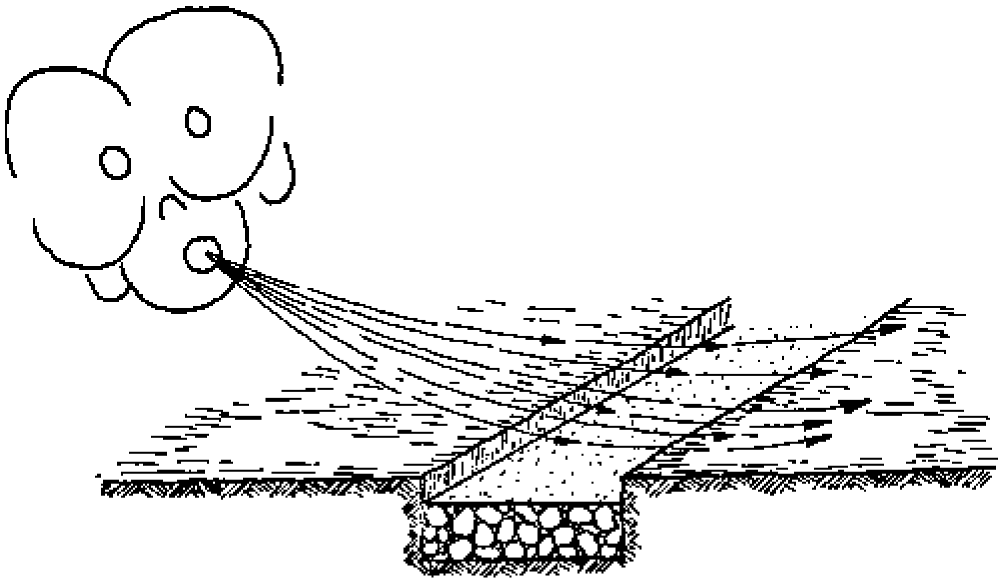

Fig. 4

- The dirt, which may get on the surface and interfere with the grip of the footings.

Any vibration near the hardening concrete could cause cracks and destroy the internal structure of the concrete. Don't continue with any excavation work, etc. near the just-completed foundation.

Once the surface has set sufficiently hard, the concrete must be wet down and kept wet for three days.

NOTES:

FOOTINGS

The projecting courses at the foot of a wall, between the rising wall and the foundation, are called the footings. If there is no wider concrete foundation, the combination foundation/footing is called a footing (see Foundations, page 25).

Functions of the footings

Since the footings form the link between the rising wall and the foundation, the demands on them are similar to those set on the foundations. These are:

- To provide a solid, level base for the walls
- To receive loads from the structure above
- To distribute the loads onto the foundation (or the ground).

In addition, the footings have to:

- Raise the floor high enough above ground level to prevent moisture from rising through to the floor, and to keep the landcrete blocks of the rising wall dry.

As far as Rural Building is concerned the last function is the most important one.

Materials and measurements

The most common material used for footings is sandcrete blocks, laid flatwise in a half-block bond. The courses are 23 cm thick and 17 cm in height, and they are laid in the centre of the foundation strip.

In order to effectively prevent moisture penetration, three courses should be laid above ground level, thus raising the soffit of the floor to a height of 51 cm above ground level. This is the minimum for all bedrooms and living areas.

Only in cases where the building is not to be used as a dwelling place for people, for example a store or a shelter for animals, may the footings be built to a lower level.

The use of boulder or laterite rock masonry is preferred as this can save considerable amounts of cement. The dimensions of such footings will be the same as those of sandcrete footings, when the laterite rock blocks are cut to the same dimensions as sandcrete blocks.

- COMPARE: Fig. 1 shows a building with no footing. The floor is at ground level and water can easily enter. The building in Fig. 2 rests on a footing and the floor is raised above ground level, so it will be drier and thus healthier to live in, and also less likely to collapse since the mud walls are kept drier.

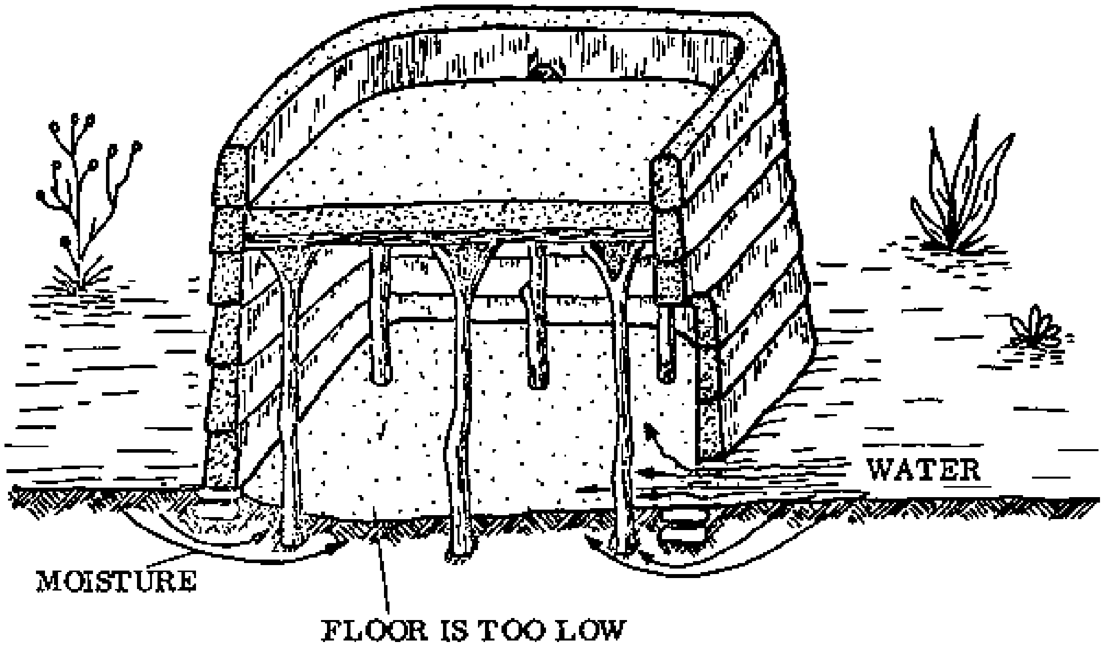

Fig. 1 BUILDING WITHOUT FOOTING

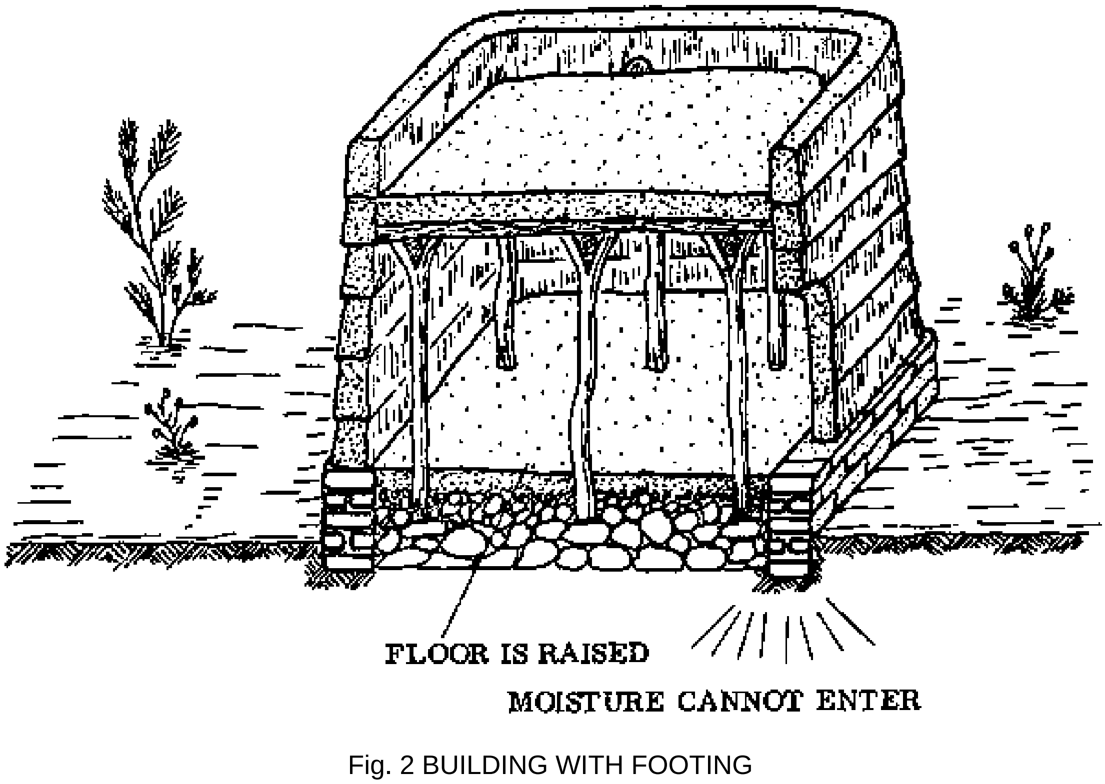

Fig. 2 BUILDING WITH FOOTING

SPECIAL BONDS

Special bonding problems occur at quoins, T-junctions and cross junctions where walls of different thicknesses meet. These situations are frequently found in connection with the footings. They may also occur in other masonry.

An example where footings with different thicknesses meet is in the construction of a verandah. This is because the footing courses under verandahs are laid edgewise instead of flatwise, in order to save material. This is possible because there are no great loads on the verandah footings.

The bonding problem arises from the fact that the dimensions of common sandcrete blocks make it difficult to form a bond between the edgewise courses and those laid flatwise. Fig. 1 shows that two courses laid edgewise do not exactly correspond with three courses laid flatwise: there is a 1 cm difference in height.

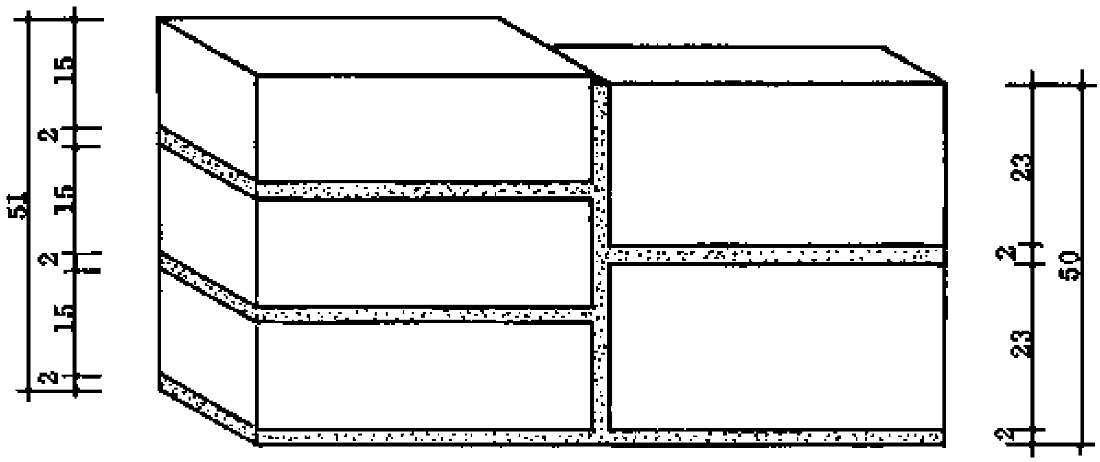

Fig. 1

Footing blocks can be specially made to dimensions that will show a better correspondence, so that bonding is easier and less block-cutting is needed to make the bonds. Fig. 2 shows four flatwise courses of specially made blocks, 10,5 cm thick, which correspond perfectly with two courses laid edgewise. Thus bonding is made easier.

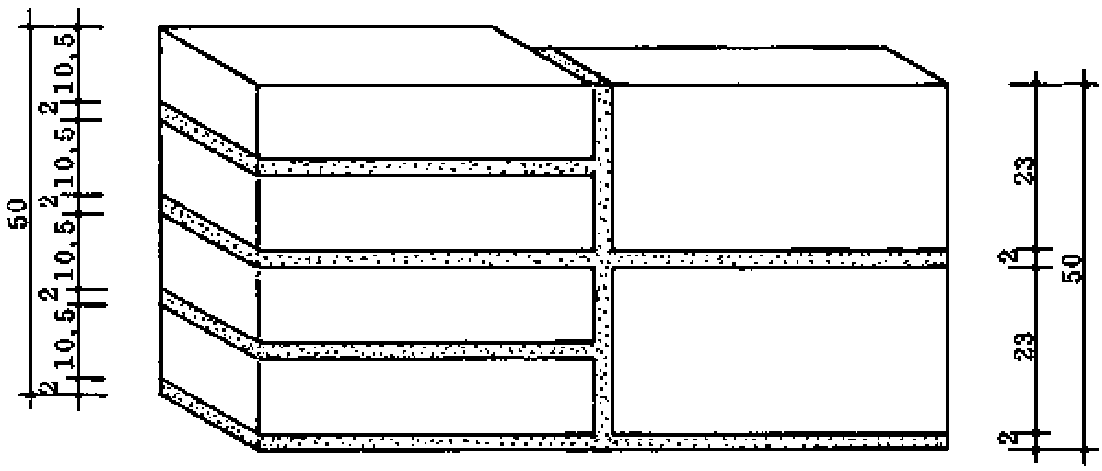

Fig. 2

The verandah footing may be kept in line with the outside face of the wall footing (Fig. 3), or in line with the rising wall (Fig. 4) which results in a recessed footing (see Drawing Book, pages 65, 66, and 90).

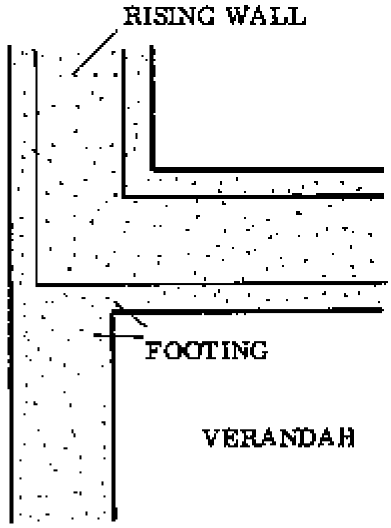

Fig. 3

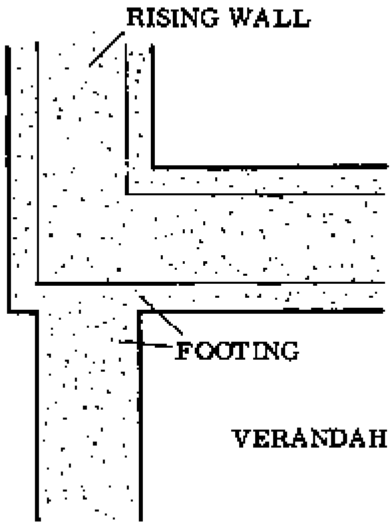

Fig. 4

Each type of block can be used with either a recessed footing or a flush footing. Therefore there are four possible situations:

- Common sandcrete blocks in a flush footing
- Common sandcrete blocks in a recessed footing
- Specially made sandcrete blocks (10,5 cm thick) in a flush footing
- Specially made sandcrete blocks in a recessed footing.

NOTES:

Different wall thicknesses at a quoin

This situation occurs when a verandah is closed at one end with a wall, or where a “loggia” is made. A loggia is a room which has one side open to the courtyard, garden, etc. (Fig. 1). The footings which carry walls have to be regular flatwise footings, while the footing on the open side can be constructed with the blocks edgewise, since it does not carry any wall.

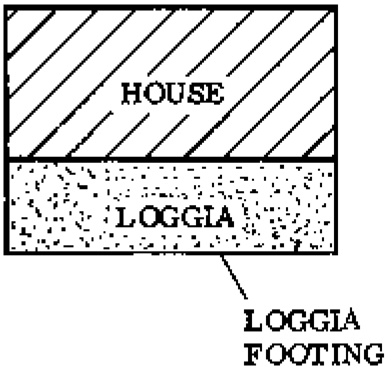

Fig. 1

- COMMON BLOCKS, FLUSH TO OUTSIDE: Fig. 2 shows that both quoin stretchers of the edgewise courses (blocks A and C) have to be cut to an odd shape to fit together with the flatwise quoin header of the second course (block B). In order to maintain the half-block bond, block B has to be cut to a length of 39 cm.

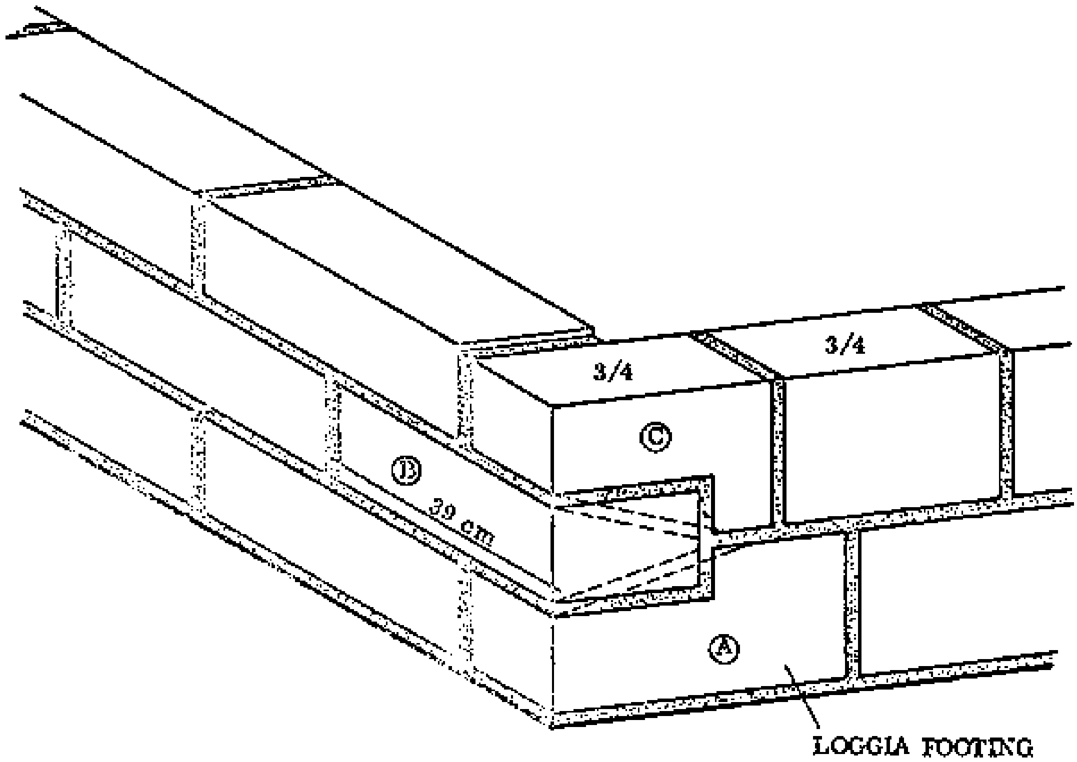

Fig. 2

- SPECIALLY MADE BLOCKS, FLUSH TO OUTSIDE: If specially made blocks are used, it is not necessary to cut them to odd shapes, and the bond is easy to make as well as more economical (Fig. 3).

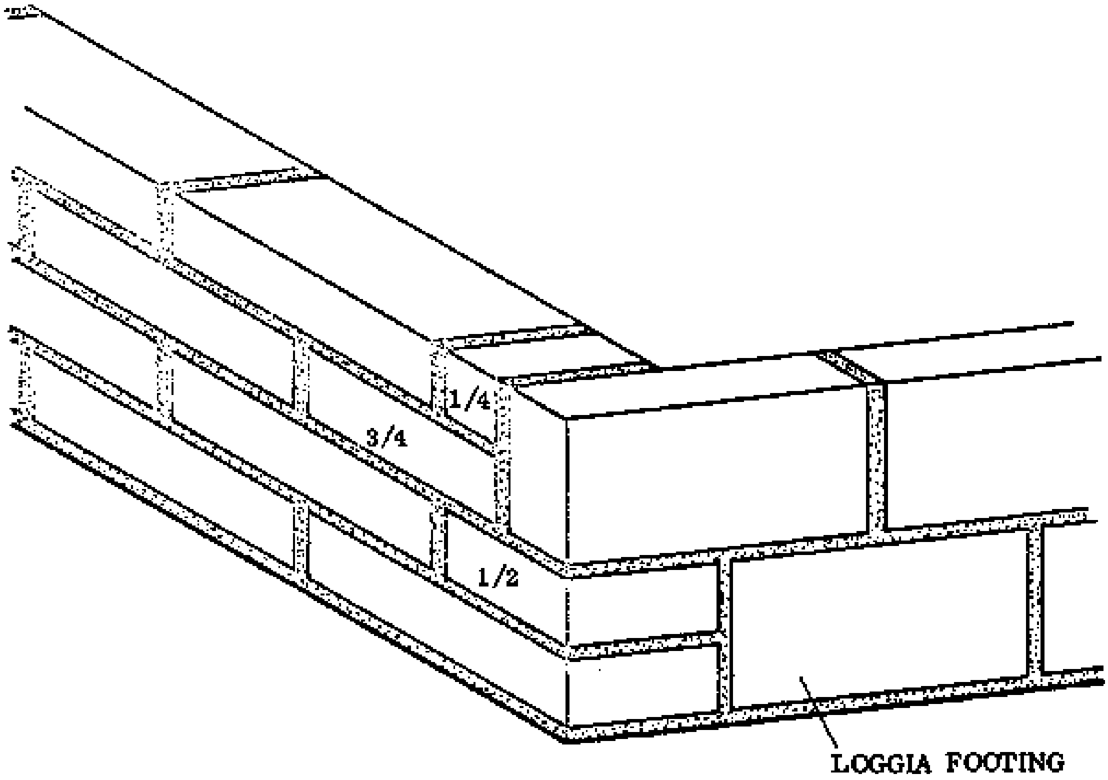

Fig. 3

A corner bond in which the edgewise courses are set back (recessed) in order to be in line with the outside of the rising wall does not make sense and it is therefore not shown here. It is best to apply one of the arrangements above, or to make the whole structure stronger by laying all the corner blocks flatwise (Fig. 4, below).

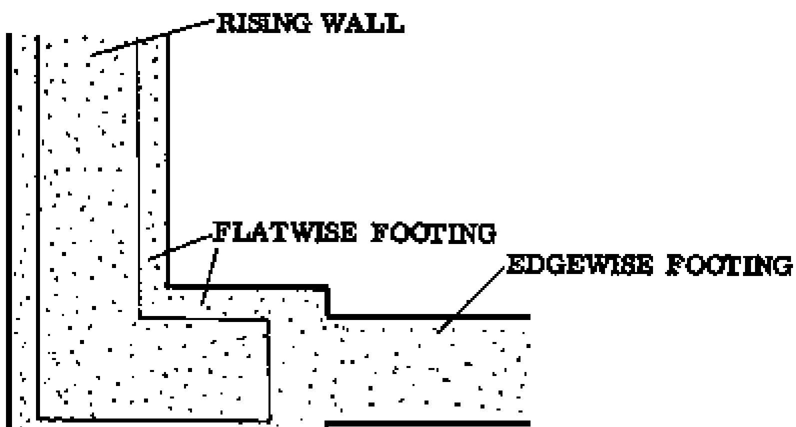

Fig. 4

- NOTE: It is best to avoid making these bonds with common blocks: use specially made blocks instead if possible, because it is extremely difficult to cut the odd shaped blocks (Fig. 2, blocks A and C) to the ideal shape without breaking them. If specially made blocks are not available, the common blocks can be given a wedge shape where they intersect, as indicated in Fig. 2 by the broken lines. This shape is easier to cut without breaking the blocks.

Different wall thicknesses at a T-junction

In Rural Building we are mostly concerned with those T-junctions in which a course of edgewise blocks meets either a corner (“A” below) or a wall (“B” below) of flatwise blocks.

Situation “A” occurs for example when a verandah is built flush with the corner of the house; while situation “B” will occur if the verandah meets the wall of the house away from the corner.

There are also possible situations where a flatwise course meets a corner or wall of edgewise blocks, but these situations are not common in Rural Building.

Here we discuss four methods which can be used in situation “A”, depending on the type of blocks available and on whether the edgewise course will be recessed or flush to the outside of the flatwise courses. Two methods are given to deal with situation “B”.

- SITUATION “A”, COMMON BLOCKS, OUTSIDE FLUSH: As with the corner bond using common blocks (previous page), this bonding problem can only be solved by shaping the first blocks of both courses of the thin wall so that the second course of the thick wall can be bonded (Fig. 1). This requires precise and careful cutting.

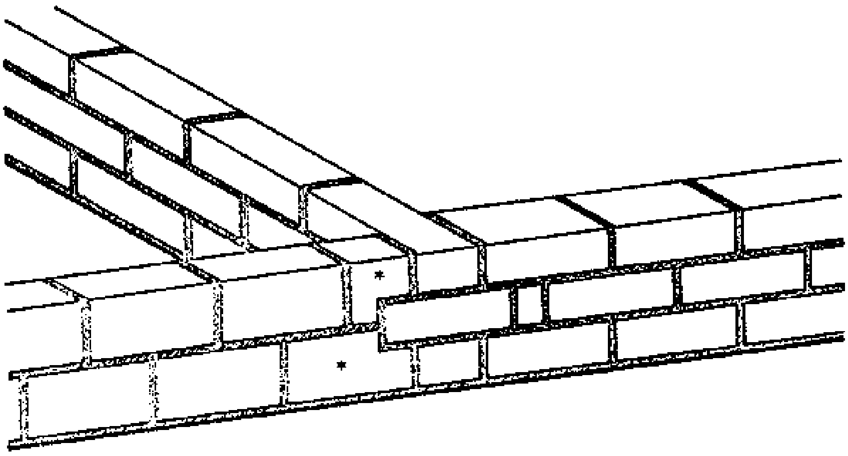

Fig. 1 SITUATION “A” - COMMON BLOCKS, OUTSIDE FLUSH

- SITUATION “A”, SPECIALLY MADE BLOCKS, OUTSIDE FLUSH: Bonding be comes simpler and more economical when these blocks are used. Fig. 2 shows that there is no material wasted since the 1/4 block which is left from cutting the 3/4 block will be used in the fourth flatwise course.

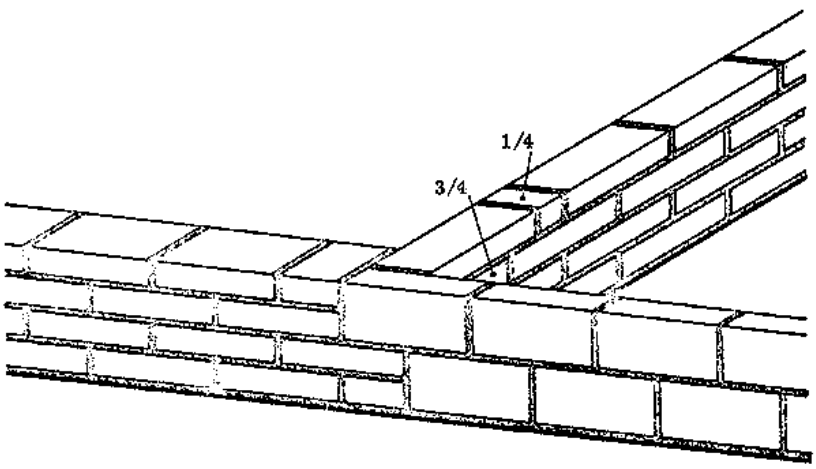

Fig. 2 SITUATION “A” - SPECIALLY MADE BLOCKS, OUTSIDE FLUSH.

SITUATION “A”, COMMON BLOCKS, RECESSED: This bond is almost the same as the first method above, except that the stretcher of the second flatwise course projects on both sides in the direction of the thin wall (Fig. 3, broken lines). After the mortar has set hard, the projecting corners are chiselled off.

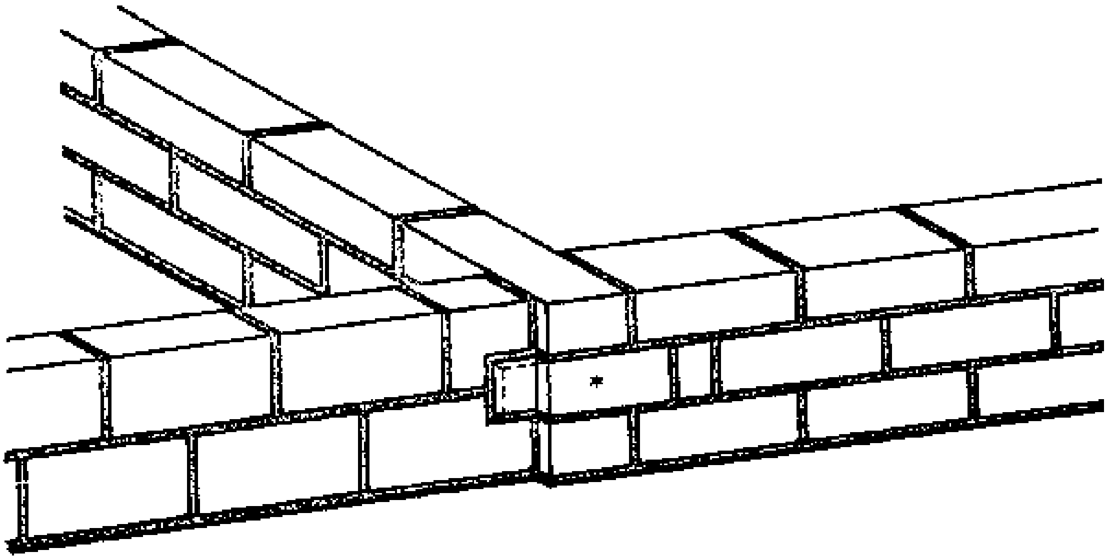

Fig. 3 SITUATION “A” - COMMON BLOCKS, RECESSED

- SITUATION “A”, SPECIALLY MADE BLOCKS, RECESSED: In this case we can use the same bond as in the second method (Fig. 2, last page). The 3/4 block and the full block above it have to be shortened by 4 cm. This will reduce the in side overlap of the junction, but that cannot be helped.

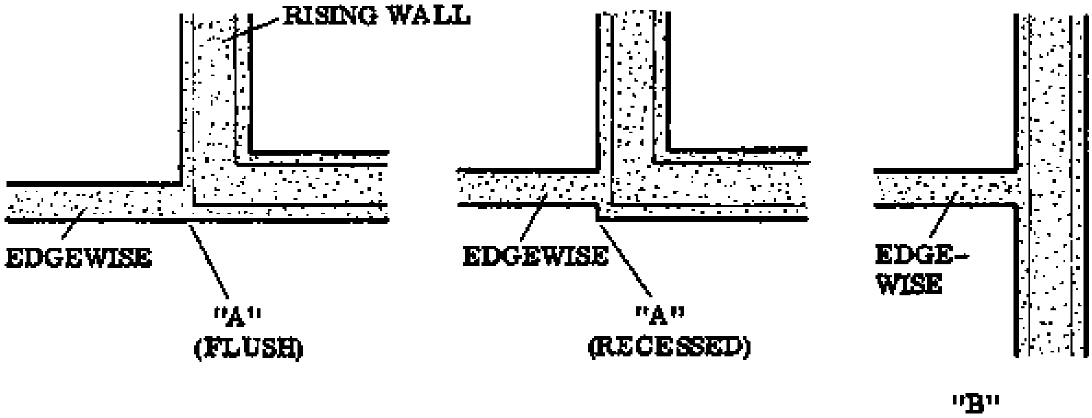

- SITUATION “B”, COMMON BLOCKS: Again, here it does not make sense to talk about making a recessed thin wall: as at a quoin, the edgewise course will always be flush with the outside face of the flatwise footing course.

Fig. 1 shows that here again we find the same problem which always arises when common blocks are used in a bond between different wall thicknesses. The first blocks of the two edgewise courses have to be cut to odd shapes.

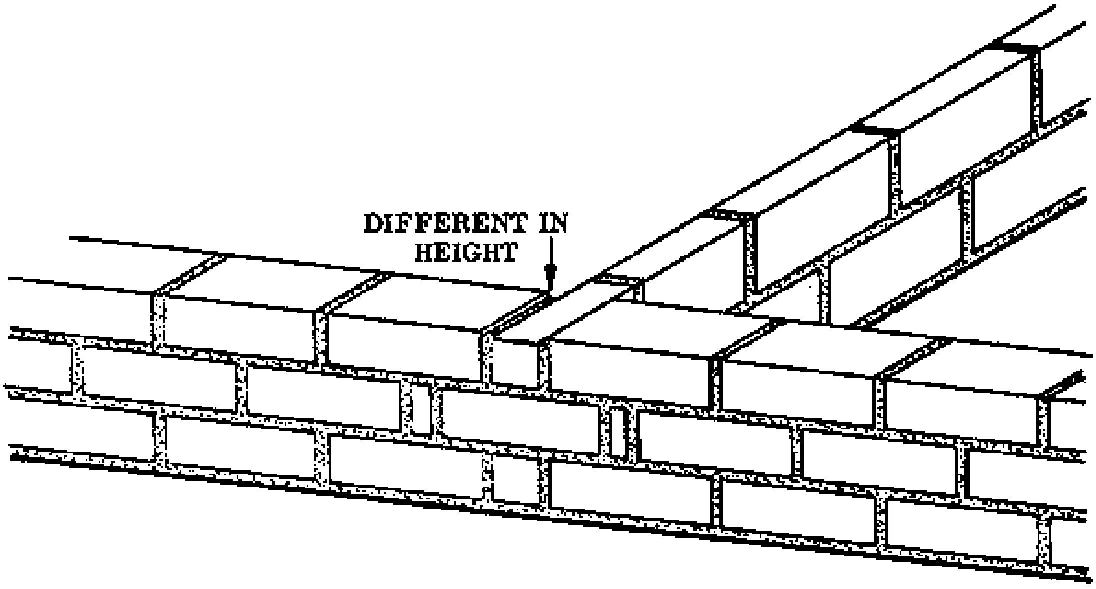

Fig. 1 SITUATION “B” - COMMON BLOCKS

- SITUATION “B”, SPECIALLY MADE BLOCKS: When this bonding method (Fig. 2) is compared with the last method, it is clear that once again the specially made blocks are the best choice.

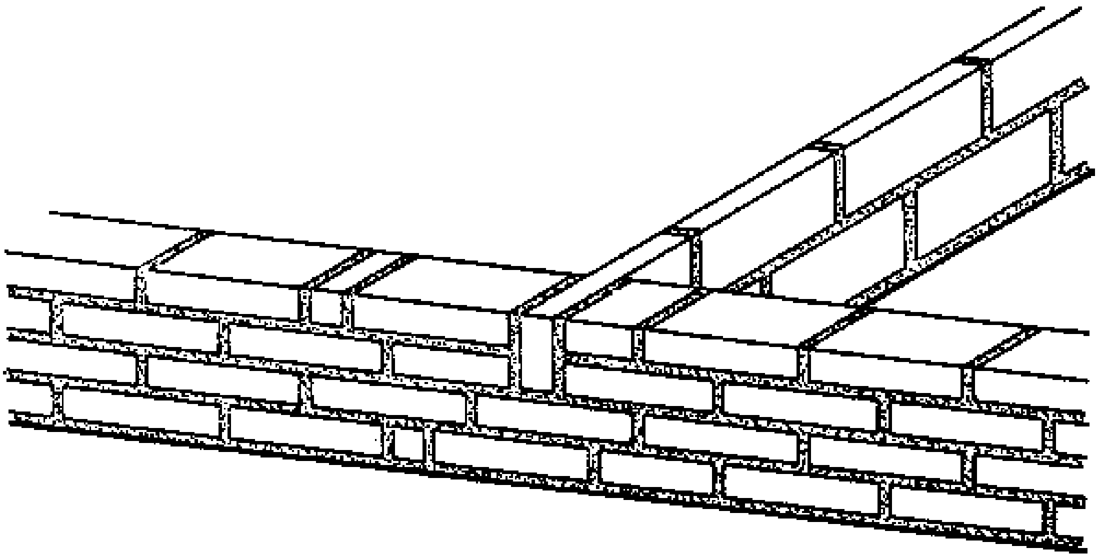

Fig. 2 SITUATION “B” - SPECIALLY MADE BLOCKS

NOTES:

Different wall thicknesses at a cross junction

There are four possible situations for a cross junction with different wall thicknesses. The one which is described here is the most common in Rural Building. This situation occurs when the end of a verandah joins the wall of the house and is in line with an inside wall (Fig. 2, below). This means that the footing blocks are laid flatwise in three directions, and edgewise in one direction.

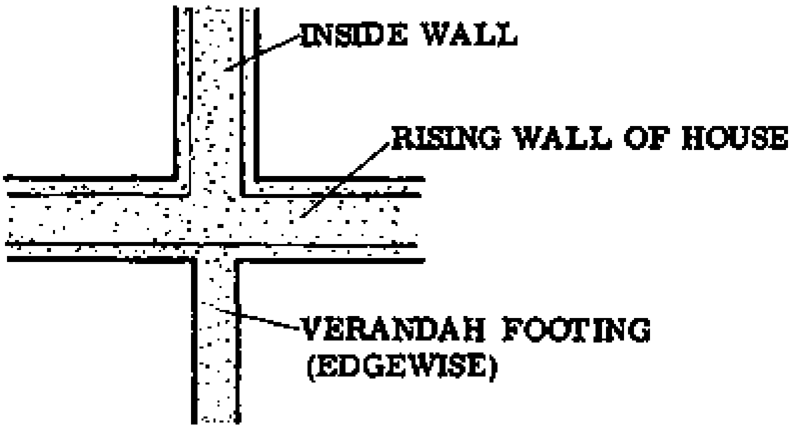

Fig. 2

- COMMON BLOCKS: The first course of the thin wall is bonded into the thick one by a 3/4 block (block A) which must be shaped in such a way that the second course of the thick wall can overlap it (block B). Block A is followed on one of its stretcher sides by a 1/2 block, while all other directions are continued with full blocks (Fig. 1a shows the first courses).

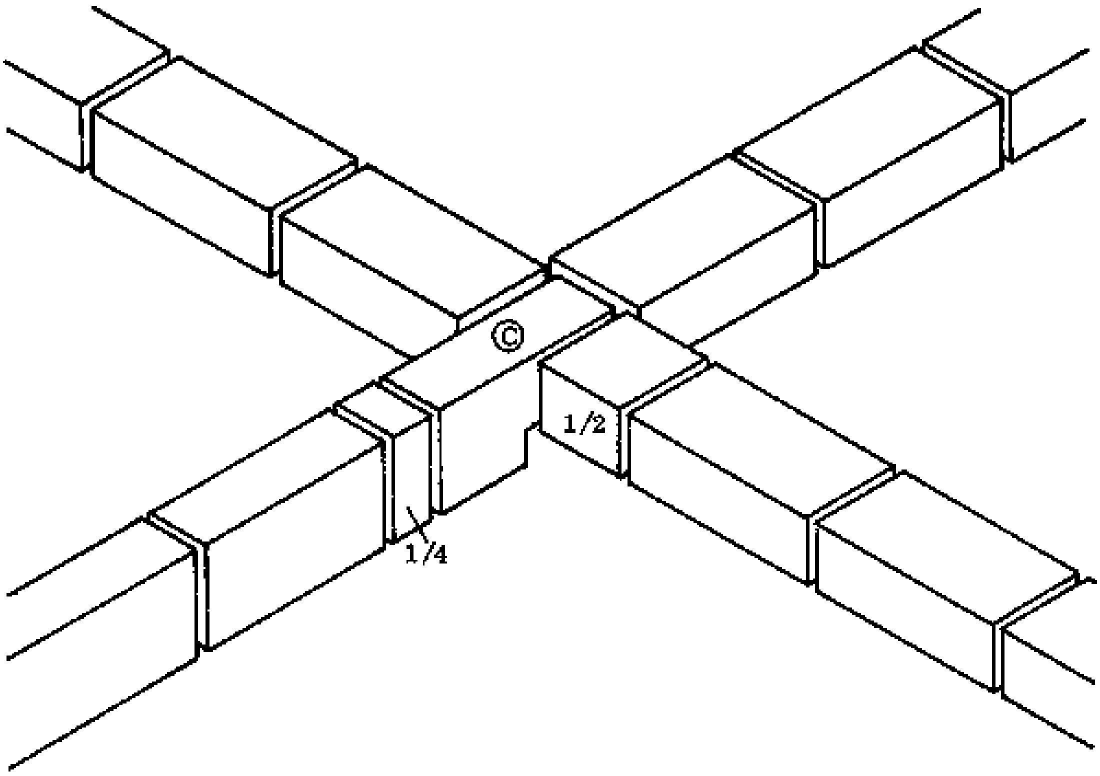

Fig. 1a 1st COURSE

In order to maintain the half-block bond, the second course of the thick wall must contain a block which is 18 cm long, and another 42 cm long; the latter overlaps the 1/2 block below. Don't forget that the first cross joint following the stretcher overlapping the thin wall is 3 cm wide, or else the first two cross joints are made 2,5 cm wide (Fig. 1b).

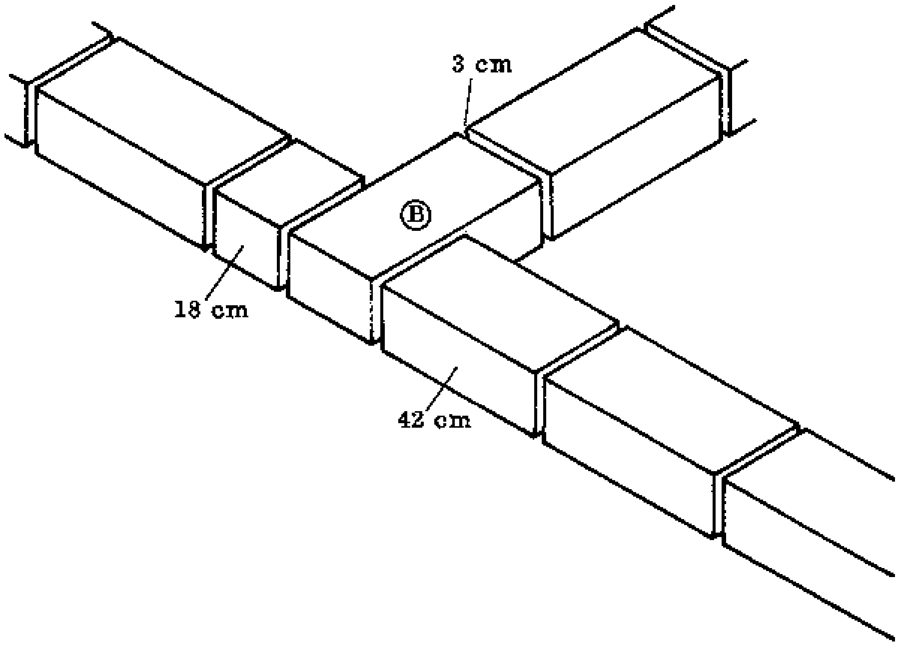

Fig. 1b 2nd COURSE

The third course of the thick walls is a repetition of the first one. The second course of the thin wall starts with a full block (block C) which is the same shape as the 3/4 block below it, so that it can be bonded into the thick wall. It is followed by the 1/4 block which was left over from the first course. Note that the thin wall remains 1 cm lower than the other walls, unless the mortar beds in the thin wall are both made 2,5 cm thick (Fig. 1c).

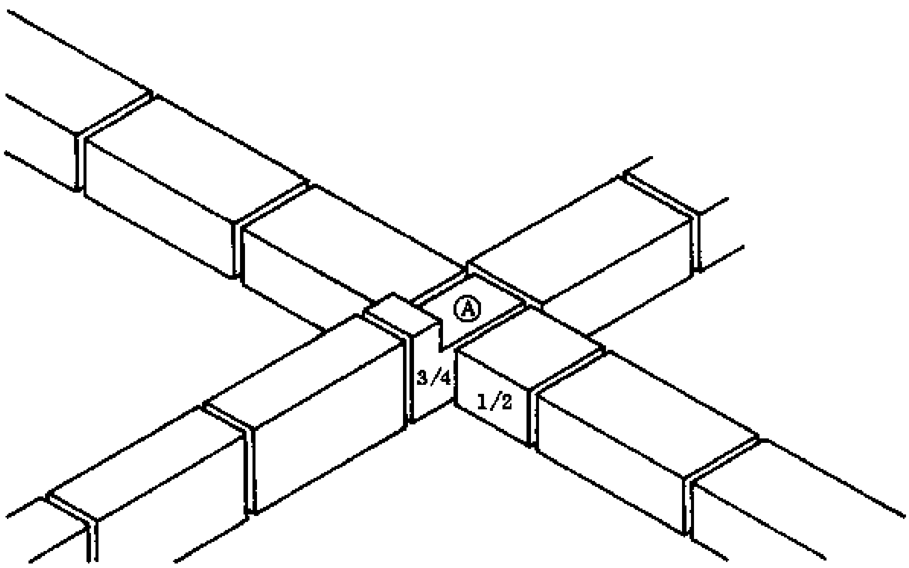

Fig. 1c 3rd COURSE

A disadvantage of this bond is that the overlap across the thin wall is rather short. This problem is not fully solved by using the specially made blocks.

- SPECIALLY MADE BLOCKS: The first course of the thin wall is bonded into the first two courses of the thick one by using a full block (block A). The first cross joint following this block is made 3 cm wide, or else the first two cross joints are made 2,5 cm wide. The first course of the thick walls continues with a 1/2 block (block B) in the direction of the thin wall, and with a 1/2 block (block C) either to the right or left side of the cross. The second course of the thick walls starts with full blocks where there are half-blocks below, and with a half-block which is above the full block of the first course (Fig. 1a).

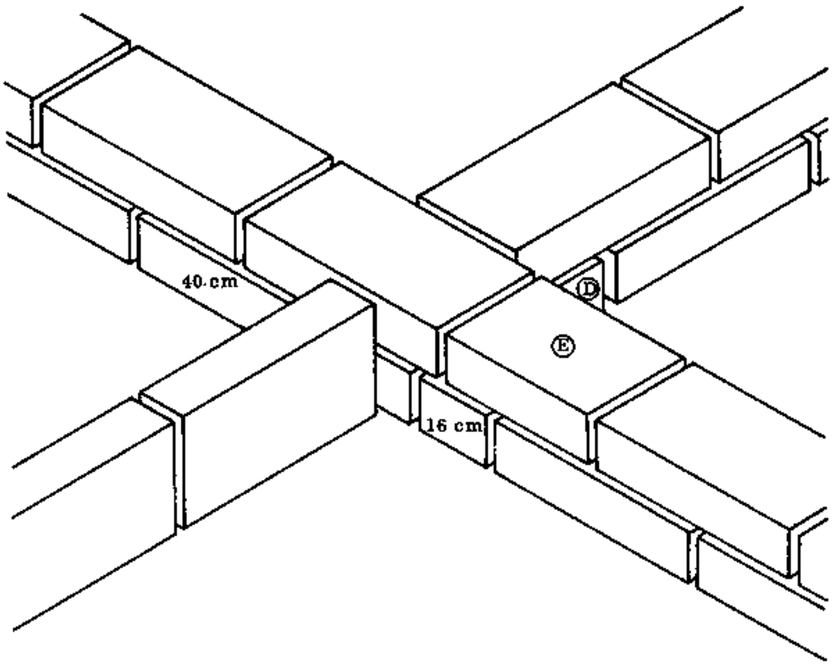

Fig. 1a 1st COURSE

The third course of the thick walls starts with a full block (block D) covering three cross joints. A block of 16 cm in length is placed beside this, above the full block; and a block of 40 cm length is placed on the other side, above the 1/2 block. The second edgewise course and the fourth flatwise course consist of full blocks, with the exception of a 3/4 block (block E) overlapping the 16 cm block below by 10 cm (Fig. 1b).

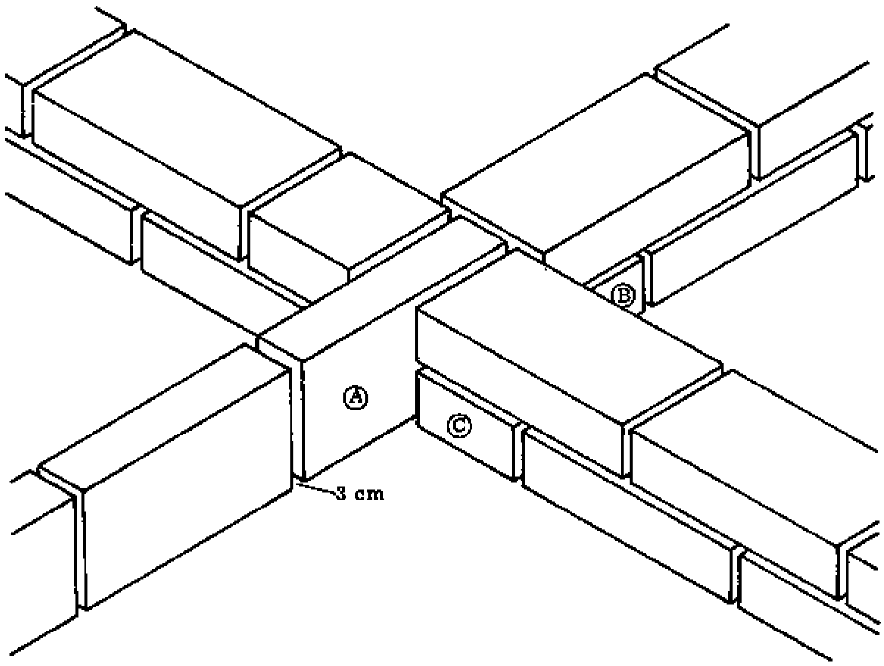

Fig. 1b 2nd COURSE

This cross junction bond, even with the use of the specially made blocks, still does not provide a very good overlap.

NOTES:

- STAGGERED BOND WITH SPECIALLY MADE BLOCKS: A simple but good masonry bond can be achieved by staggering the bond. This means that the thin wall is shifted to either side of the crossing thick wall. The distance between the two centre lines of the walls will be about 19 cm (Fig. 1a).

The first course of the thin wall is bonded into the thick one by using a full block. The two courses on the left side of this almost form a quoin, while the courses on the other side are completed in the normal way. Apart from the 1/2 block in the second course, only full blocks are needed (Fig. 1a).

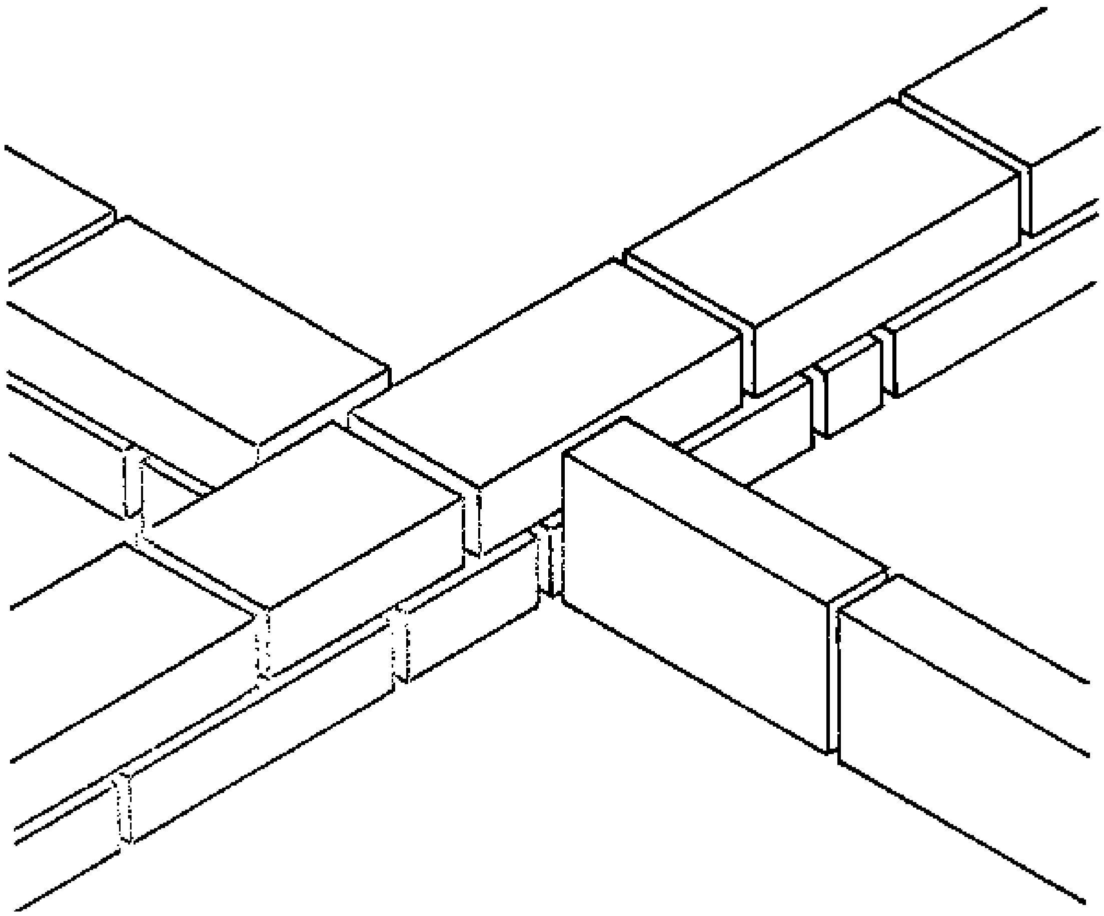

Fig. 1a 1st COURSE

The third and fourth courses of the thick wall are bonded as if in a T-junction, except that the 1/4 block of the third course is placed further away from the junction, to avoid having too many cross joints in the junction area (Fig. 1b).

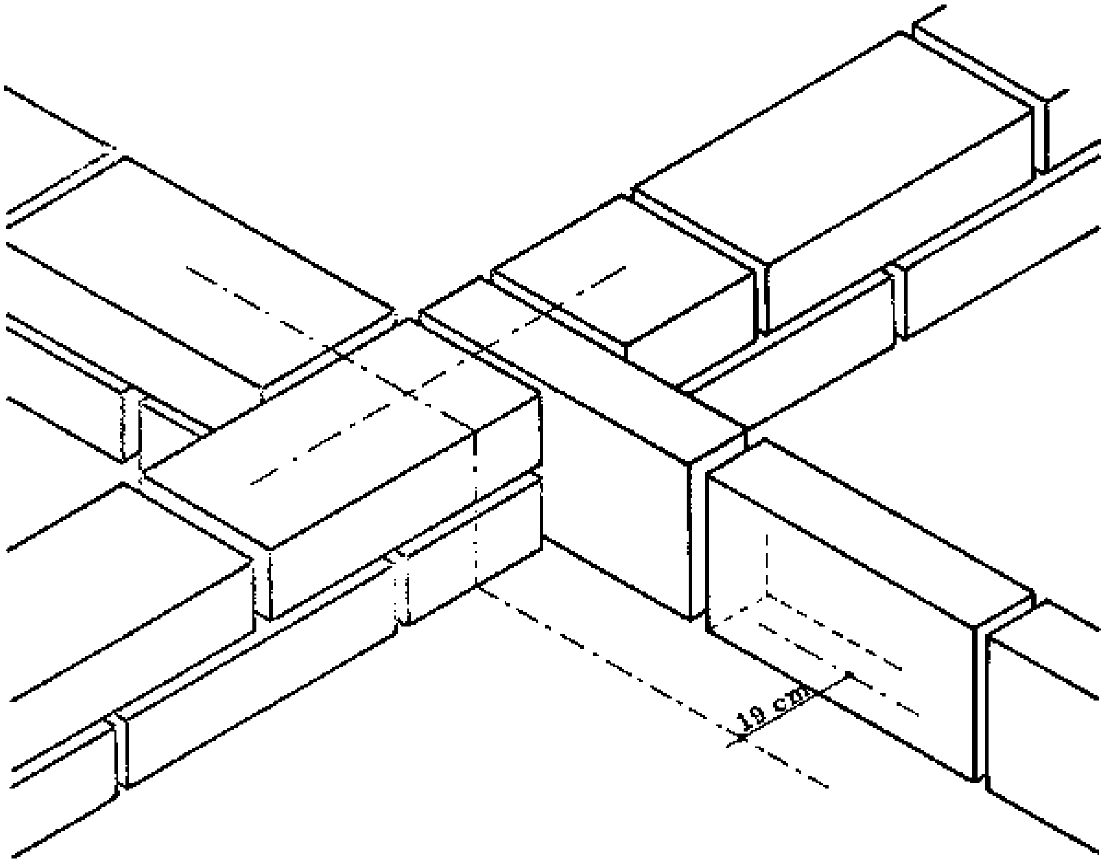

Fig. 1b 2nd COURSE

- NOTE: By planning ahead and doing a little extra work in setting out, you can avoid complicated and costly constructions.

For footings where there will be junctions between flatwise and edgewise blocks, it is always better to use specially made blocks which are 10,5 cm thick. These allow proper bonding, are more economical, and avoid the necessity for constructing junctions between two edgewise courses and three flatwise courses.

Cross junctions between different wall thicknesses should be avoided because the bonding is difficult and the overlap is poor. A staggered bond is preferred in those cases where a simple T-junction cannot be made instead of the cross junction.

NOTES:

HARDCORE FILLING

Functions of the hardcore filling

The two main functions of the hardcore filling are:

- To support the concrete floors, including all loads imposed on the floors
- To raise the floors high enough above ground level to prevent dampness from penetrating.

The hardcore has to be made from hard, solid materials which are arranged in such a way that moisture is not able to rise through them to the floor.

Materials and arrangement

All topsoil is removed before the hardcore is applied. Then the filling is applied in layers no more than 15 cm thick. Each layer is compacted thoroughly before the next one is added. The hardcore filling occupies the space between the subsoil and the tops of the footings (Fig. 1).

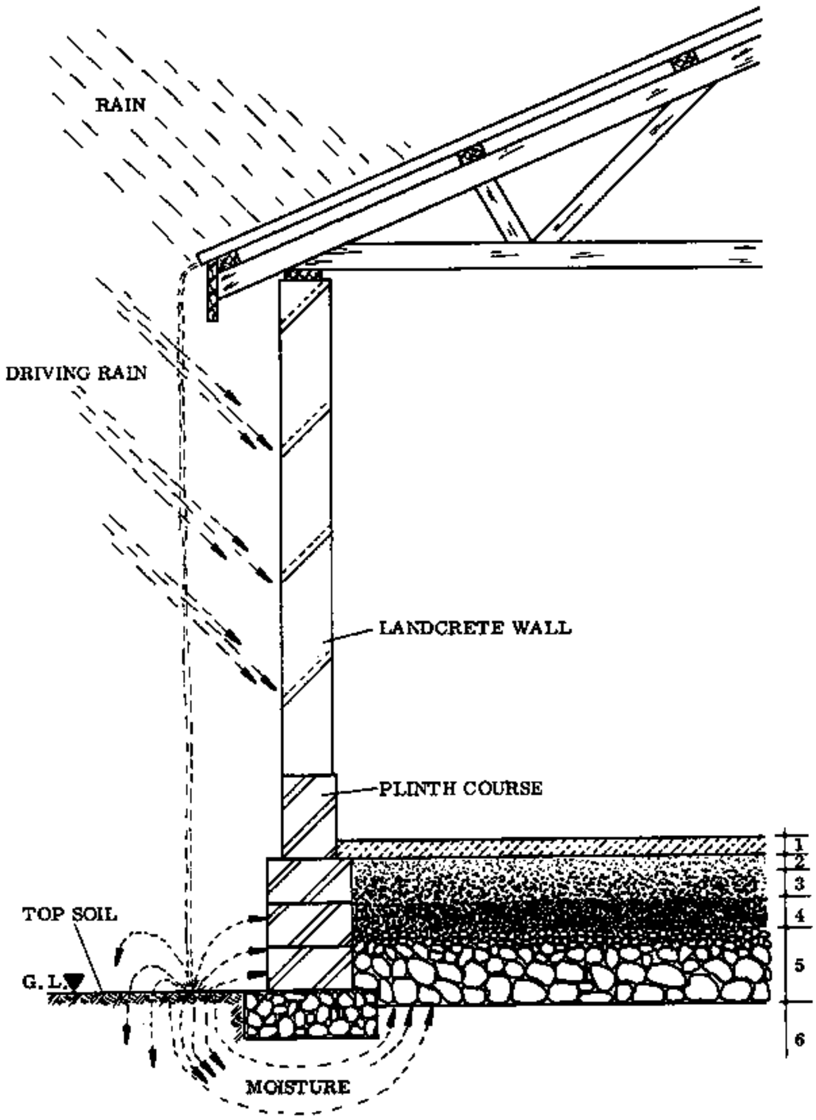

THE HARDCORE FILLING PREVENTS MOISTURE FROM RISING UP TO THE FLOOR

1 = CONCRETE FLOOR
2 = FINE SAND
3 = FINE GRAVEL
4 = COARSE GRAVEL
5 = ROCKS & STONES
6 = FIRM SOIL

The first layer consists of rocks, stones and broken sandcrete blocks. These are no smaller than fist-size and no bigger than 15 cm in diameter. The stones for this layer are preferably set into place by hand, according to their shape, in order to fit them together.

For the second layer we use broken stones which are about half the size of a fist. The following layers are formed of smaller stones, coarse gravel, or gravelly laterite soil; up to about 6 cm below the tops of the footings.

The last 6 cm to the top of the footings should be filled with sand or laterite soil to seal the surface of the hardcore, in order to keep the cement paste from the floor from leaking downwards.

- BACK-FILLING: If the foundation consists of stone masonry, the extra space left inside the foundation trenches has to be filled in before the hardcore is done. If the space is more than about 30 cm wide, it is best to use hardcore to fill it. If less, rammed soil will be sufficient.

The outside of the trench excavation has to be refilled with gravel, to prevent erosion around the foundations (Foundations, page 19).

Never be tempted to fill up the site with soil underneath the hardcore, even on a sloping site: even if the soil is compacted it will still settle and cause the floor above to settle and crack. The hardcore should rest directly upon the subsoil.

Compaction of the hardcore

All the layers are normally compacted by hand with heavy rammers. This exhausting work can be made easier by using heavy iron or concrete rollers, or by driving a tractor several times over the hardcore to compact it.

Wet down the gravel and sand layers as they are filled in. This not only reduces the dust in the air but also makes compaction easier and ensures a dense layer.

Sometimes the building schedule allows construction to halt during the rainy season. If so, then it is a good idea to plan ahead in order to complete the hardcore filling before the rains come. This is done so the hardcore can be left open during the rainy weather to become very well compacted by the rain. However, it is still necessary to compact the layers of hardcore as they are added. The hardcore can be inspected from time to time during the rainy season, and any sunken areas can be filled up as they develop.

- NOTE: It is sometimes observed that a builder uses soil excavated from the foundation trenches to make the hardcore. This is convenient, but it is a bad procedure. The laterite soil acts as a sponge to draw moisture up from the subsoil into the building. The hardcore is made with a rock base because the rocks do not draw moisture upwards, so the building stays drier.

Gravelly laterite soils can be used for the layers just below the final layer, and fine laterite soil may be used for the final layer which seals the hardcore filling.

PLINTH COURSE

The plinth course forms the first course of the rising wall, immediately above the footings. Its sole function is to raise the landcrete blocks or sun-dried laterite blocks of the following courses high enough to protect them from moisture penetration.

The materials used for the plinth course should therefore be moisture resistant to some extent, such as natural stone or sandcrete blocks (Fig. 1, last page). It is known from experience that one plinth course is sufficient in northern Ghana, but there are situations where it is better to use a more durable material up to window cill level, especially in the rain-forest areas of Ghana.

In northern Ghana the rising landcrete walls are erected flush with the outside of the plinth course. In the south, however, it is advisable to lay the landcrete blocks flush to the inside of the plinth, so that thicker render can be applied on the outside to protect against moisture penetration.

POSITIONS OF DOOR AND WINDOW FRAMES

Before the plinth course is laid, the positions of the doors are marked on the footings.

If the door frames have been already made and painted they may now be set into place according to the marks. If the frames are not yet available, the plinth course and the rising walls can be erected anyway. In this case one must remember that the measurements given in the drawing are the outside measurements of the frame. Therefore the opening left in the wall must be about 1 cm wider on all sides, so that later on the frame can fit in (see Fig. 1).

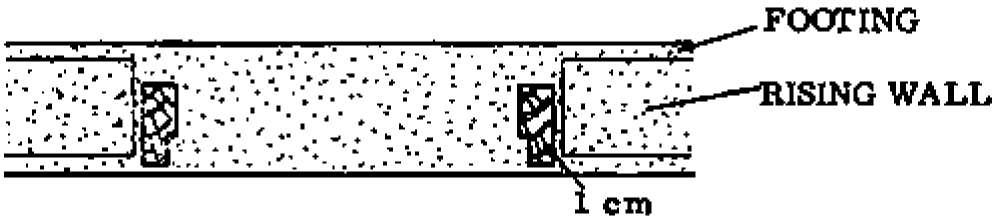

Fig. 1

The way the door and window frames are positioned in the surrounding masonry depends on the type of door or window, which way it opens, and whether mosquito-proofing and/or burglar-proofing will be installed.

Fig. 2 shows the most common position in which the frame is set flush to the outside of the render. The frame may be flush to both the inside and outside surfaces (Fig. 3), although the cill may project past the render on the outside face. Keep in mind the thickness of the plaster or render when you set the frame in the unplastered wall. The frame edge should be in line with the future plaster surface.

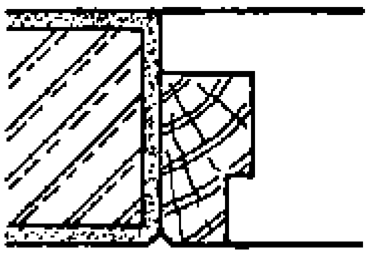

Fig. 2

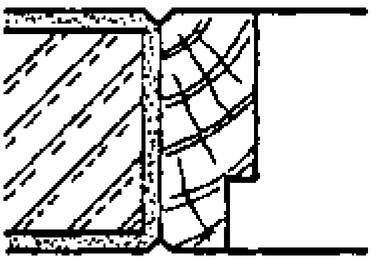

Fig. 3

Vibrations from opening and closing the door or window, as well as the shrinking and swelling of the frame, will cause cracks to appear in the plaster and even cause pieces of plaster to come off. To prevent this and to cover the unavoidable cracks, a V-joint is made wherever plaster or render is flush to the frame. This may be covered with a wooden strip (Fig. 4). It is incorrect to apply plaster or render directly against the frame (Fig. 5, arrow).

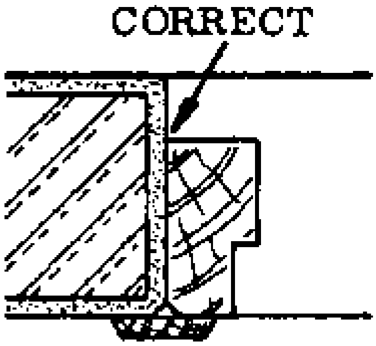

Fig. 4

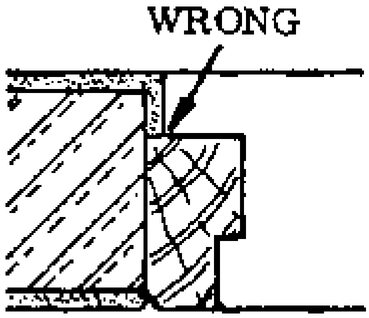

Fig. 5

DOOR FRAMES

Types of door frames

The door frame provides a secure attachment for the door. Depending on the type of door, its function, and its location, different types of door frames can be constructed. The most common door frame consists of three members (Fig. 1):

- Two vertical members called posts (a)
- One horizontal member called a head (b).

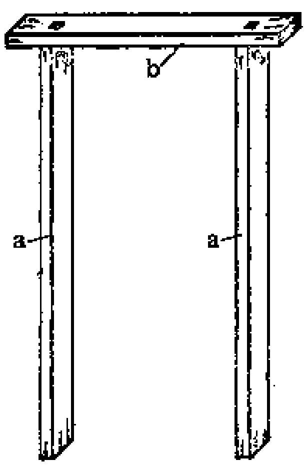

Fig. 1

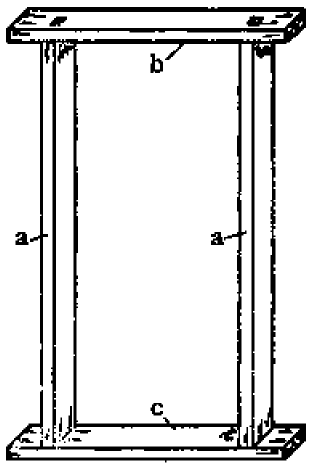

Fig. 2

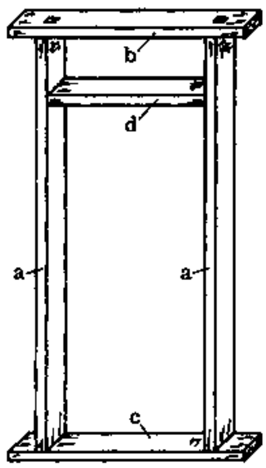

Fig. 3

When it is necessary for the door to fit tightly in the frame, it consists of four members (Fig. 2):

- Two posts (a)
- One head (b)
- One member on the floor, called the threshold (c).

When additional light or ventilation is needed for a room, a fanlight is added to the frame structure by adding one more member between the posts, called a transom (Fig. 3, d).

Note that since the threshold is in direct contact with the floor, or even partly embedded in the floor, it is in special danger from attack by termites or fungus (Reference Book, pages 141 to 144).

- BEAD OR REBATE TYPE DOOR FRAMES: Each of the above door frames can be made either with beads (Fig. 4) or a rebated construction (Fig. 5).

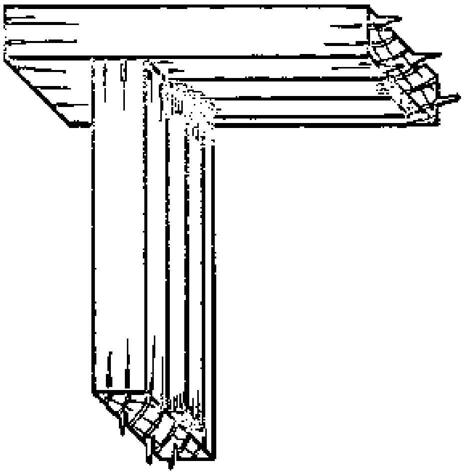

Fig. 4

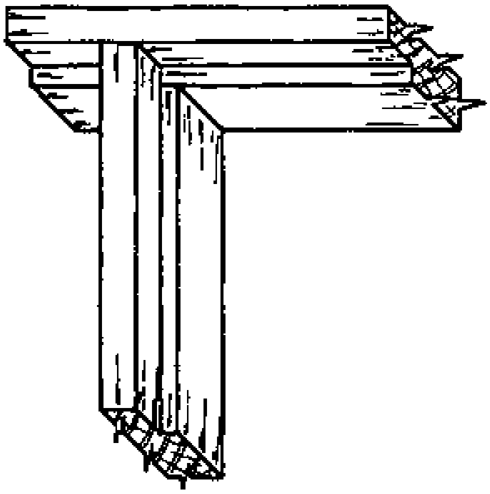

Fig. 5

Beads are preferred over a rebate for two reasons: the construction is easier, and it is possible to adjust the beads after the door is hung. Beads are always fixed into place after the frame is installed and the door is hung.

Rebates, however, do have a better appearance than beads, and no extra wood is required to make a rebated frame.

NOTES:

Joints for door frames

- JOINTS FOR DOOR FRAMES WITH BEADS: The joints for a door frame made with beads can be common mortice and tenon joints for box-like constructions. They may be either pegged, wedged or nailed (Basic Knowledge, pages 104 to 106, and 124; also Drawing Book page 43 and pages 67 to 71).

If a transom is required, it should be installed using a stub tenon joint to prevent water from penetrating the mortice (Basic Knowledge, page 122).

If a threshold is installed, a common mortice and tenon joint is used for it, but wedges should not be used since they might fall out. Pegs cannot be used either, because the threshold is too thin. This joint should be nailed.

- JOINTS FOR DOOR FRAMES WITH REBATES: If the door frame is made with a rebate, take care that the shoulders of the tenons are set out and cut correctly. One shoulder of the tenon is cut longer to fit the rebate (Drawing Book, pages 67 &68).

The thickness of the tenon is affected by the size of the rebate. If the rebate is 1/3rd or less of the width of the member, the tenon will not be reduced in size (Fig. 1). If the rebate is wider than 1/3rd of the member, the thickness of the tenon (and accordingly the mortice width) is reduced by the depth of the rebate (Fig. 2).

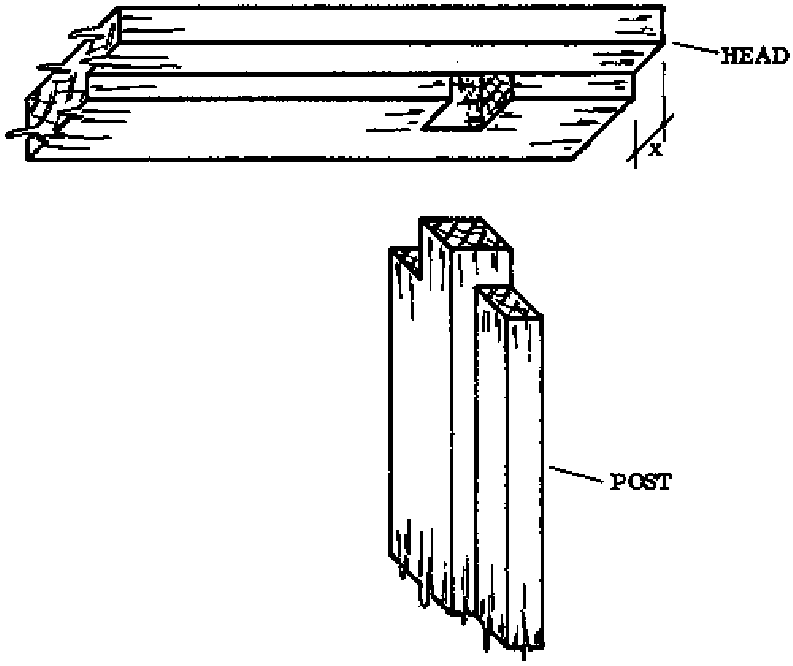

Fig. 1 WIDTH OF REBATE (x) 1/3 OR LESS

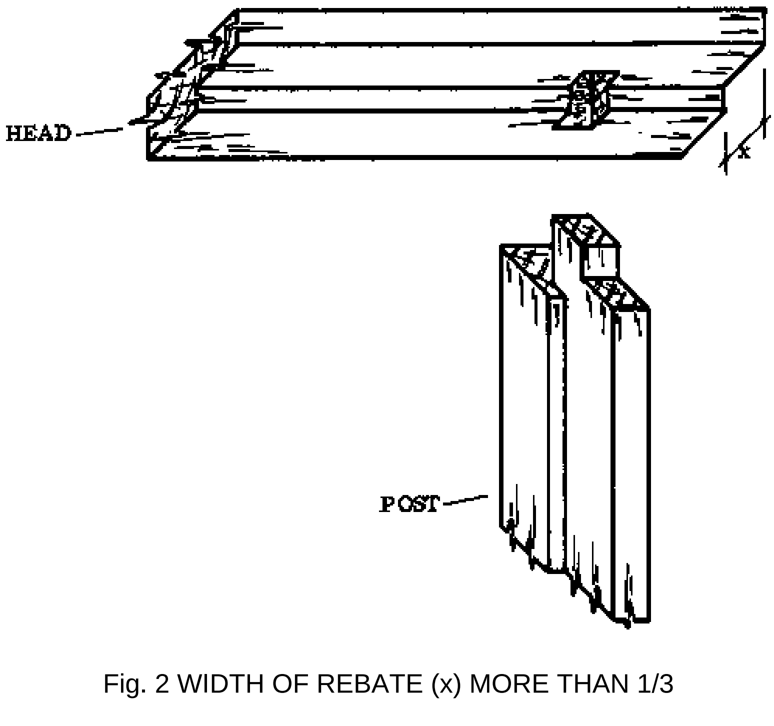

Fig. 2 WIDTH OF REBATE (x) MORE THAN 1/3

Besides these considerations, the construction of these joints will be the same as for any common mortice and tenon joints for box-like constructions.

NOTES:

Heads of door frames

- HORNS: In order to provide an additional attachment to the wall, the ends of the head and the threshold can project beyond the posts into the wall. This is especially necessary in mud walls.

These projecting parts can be shaped like horns (Fig. 1), or else the front corners can be cut off at an angle (Fig. 2). These shapes give a good appearance to the frame head when the frame is built into the wall.

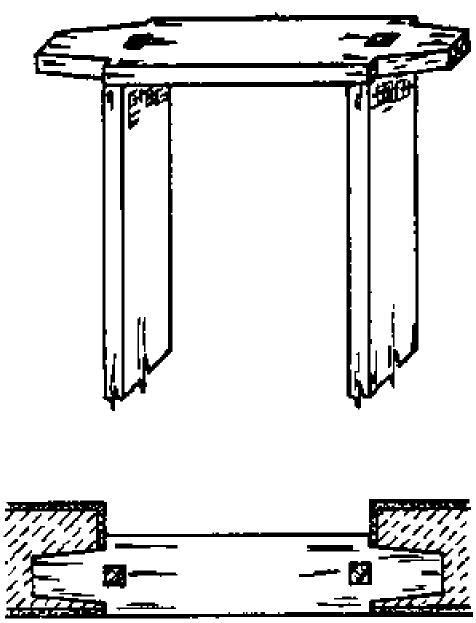

Fig. 1

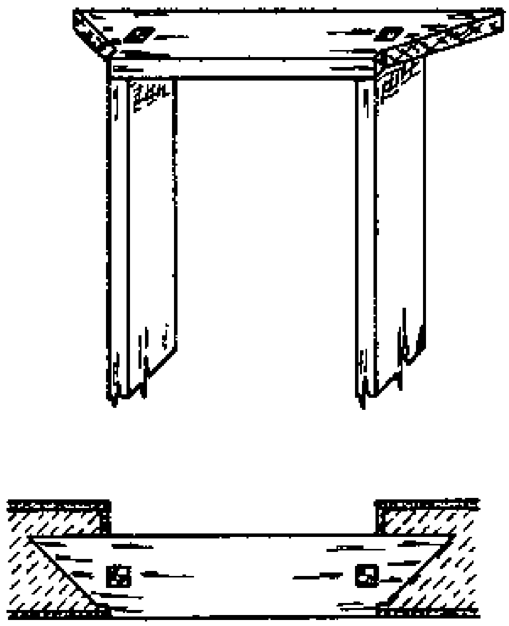

Fig. 2

- WEATHER STRIPS: If a door frame is to be installed in an outside wall, you need to take some extra precautions to prevent water from entering between the lintel and the frame head, and between the door itself and the door frame.

Weather strips (Fig. 3) can be fixed on the door head to keep water out. We will learn more about weather strips later in the book, in the section on window frame heads.

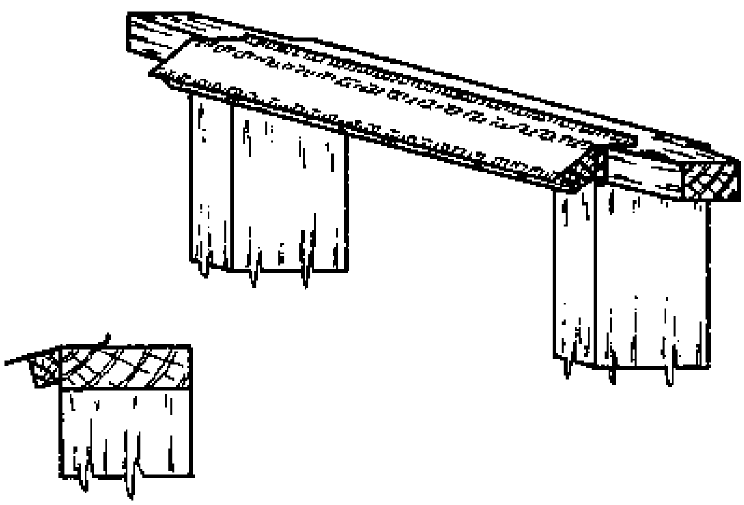

Fig. 3

- STEEL CRAMPS: These are pieces of mild steel rod which are fixed into the door posts (Fig. 1, next page). They are fixed about 60 cm apart; near the head, middle and foot of the frame.

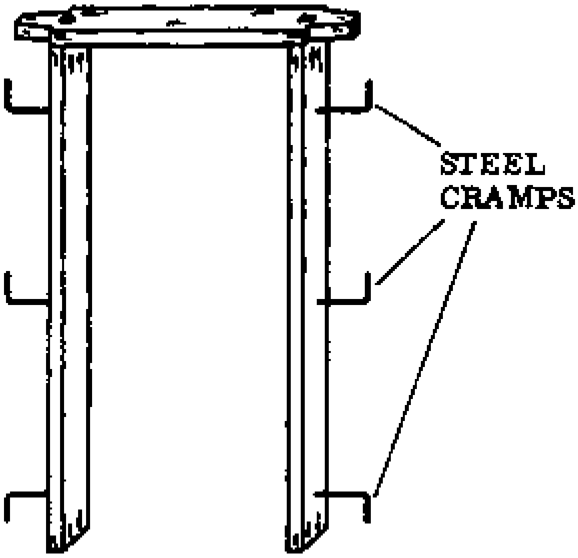

Fig. 1

The function of these cramps is to secure the frame rigidly to the blockwork. They are set in the posts in positions which correspond with the bedjoints of the blocks, so that they can be built into the bedjoints.

To fix the cramps in the door frame, drill holes in the posts. The holes should have a diameter a little smaller than the rods, and should not go all the way through the post. Bend one end of the rod to form a head (Fig. 2, next page) and knock the head into the post. Bend the other end to a right angle so it fits into the cross joint between the blocks (Fig. 2, next page).

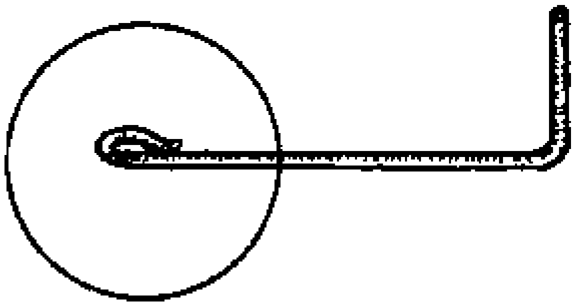

Fig. 2

NOTES:

Measurements for door frames

- MEASUREMENTS OF THE TIMBERS: Usually door frames are made of timbers which are about 10 cm wide and about 5 cm thick. If the posts are held in the wall by steel cramps, it is possible to reduce the size of the timbers to 7,5 by 5 cm. The cramps provide a good grip to the wall so the frame doesn't have a lot of stress on it. This means that the timbers can be made smaller and thus less costly. The cramps are made by cutting iron reinforcement rods.

The frame itself is always measured from inside face to inside face. Unless it is stated otherwise on the estimate, measurements given for door frames are always inside measurements.

- MEASUREMENTS OF THE FRAME WITH RESPECT TO THE MASONRY: To make the work easy, to avoid extra block-cutting, and to reduce waste, the outside measurements of the frames should correspond to the building unit measurement of the blocks used to construct the wall. For example:

- The building unit measurement for landcrete blocks is 31 cm wide by 24 cm high.

The outside height of the door frame will be 8 x 24 = 192 cm.

The outside width of the door frame will be 3 x 31, minus 2 cm for one cross joint = 91 cm (Fig. 3).

The steel cramps are also placed according to the building unit measurement of the blocks, so that they will fit into the bedjoints of the wall (Fig. 3).

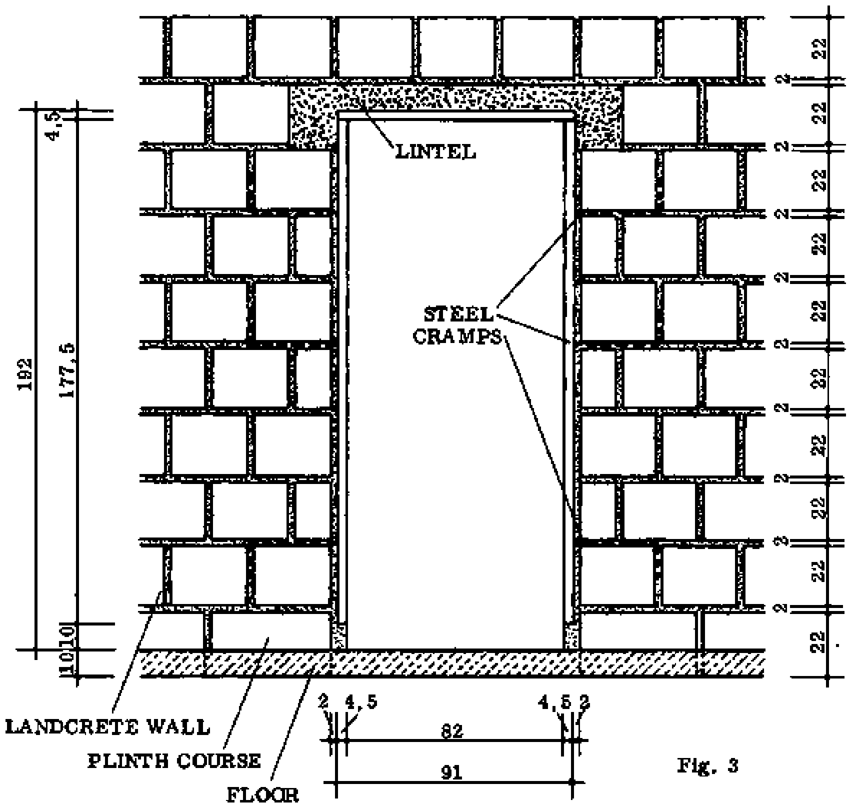

Fig. 3

NOTES:

Concrete shoe

In order to give a firm base to a door frame with no threshold, concrete “shoes” can be fitted on the posts.

To make the shoes, drive steel dowels into the bottom end of each post before setting the frame in the wall (Fig. 1). The projecting ends of the dowels are enclosed later by the finished floor and the shoe (Fig. 2).

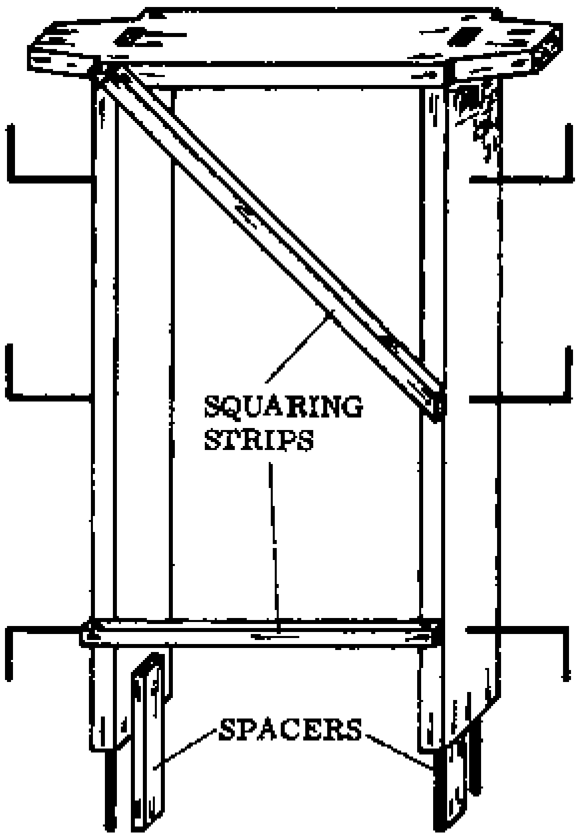

Fig. 1

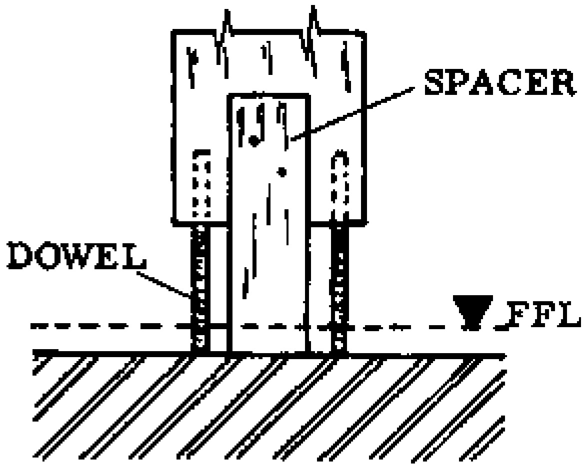

Fig. 2

Spacers are used to keep the frame at the correct height during the building operations (Fig. 1). The steel dowels are short pieces cut from reinforcement rods.

- ADVANTAGES AND DISADVANTAGES OF THE THRESHOLD (Fig. 3):

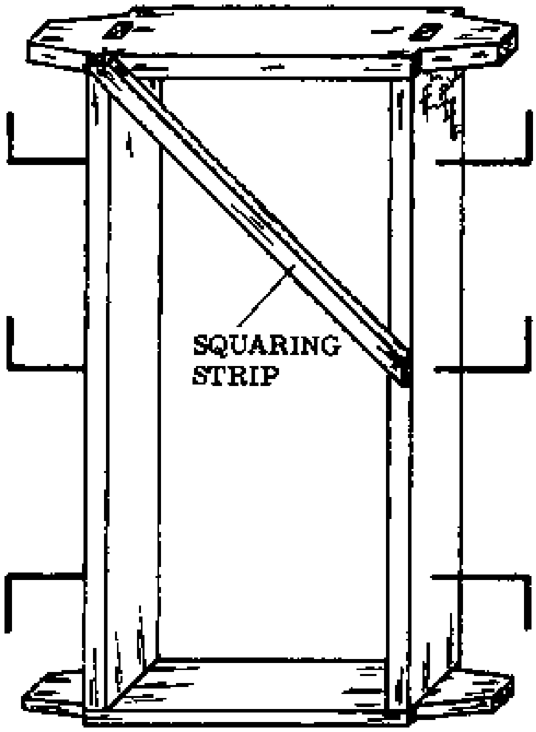

Fig. 3

advantages:
- The door closes tightly into the framework.
- If the threshold is thick enough, it can be made with a rebate.

disadvantages:
- The threshold is easily attacked by wood diseases or termites.
- More materials are needed.
- More joints have to be made, therefore construction is more difficult.
- Water can penetrate between the threshold and the finished floor (Figs. 4a & 4b).

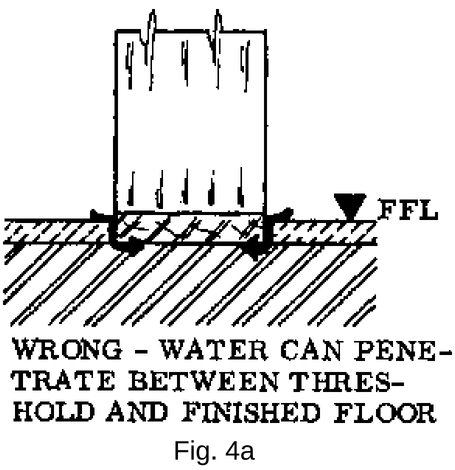

Fig. 4a

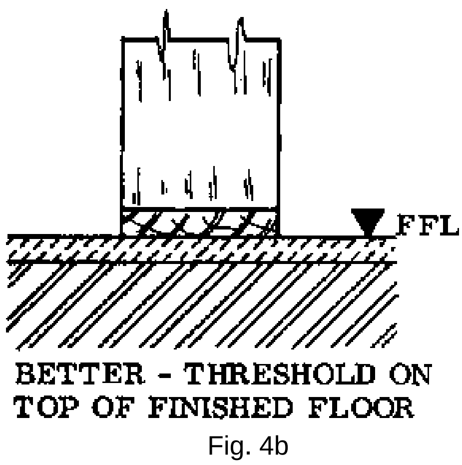

Fig. 4b

- ADVANTAGES AND DISADVANTAGES OF THE CONCRETE SHOE

advantages:
- The wood is not in direct contact with the floor, so there is less danger of attack by termites, etc.
- Less materials are needed.
- The shoe secures the doorframe to the floor.

disadvantages:
- The door might not close as tightly as with a threshold.
- If the frame is not well braced during the building operations, there may be a danger of distorting it while fixing it in place.

- SEQUENCE OF OPERATIONS FOR MAKING A REBATED DOOR FRAME WITH A CONCRETE SHOE: (see Drawing Book, page 67)

a. Study the drawing.

b. Prepare a cutting list.

c. Select the wood.

d. Plane the wood to the required sizes (as indicated on the cutting list).

e. Make the face marks.

f. Mark out the joints (take special care in marking out the shoulders of the tenons on the posts) and mark the length of the posts.

g. Mortice the head and rip the tenons at the posts.

h. Plane the rebate.

i. Cut the shoulders of the tenons.

j. Drill the holes for the steel dowels.

k. Clean up the inside edges.

l. Paint all the members with a primer, especially the joints.

m. Fix the steel dowels and the wooden spacers.

n. Drill the holes and set anchors at the correct places (steel cramps).

o. Assemble the frame with squaring strips.

p. Cut the horns to the required shape and paint them.

Take care when marking the lengths of the posts. They should be the length of the door; plus the upper joint, and minus the height of the concrete shoe.

- ASSEMBLING THE DOOR FRAME: To keep the door frame rigid and square during the various building operations, it needs to be braced. This bracing is done with squaring strips (Fig. 1, last page). These, strips are about 2 x 5 cm, and they are cut into the rebate or nailed to the face of the frame. They hold the frame square and keep the correct distance between the posts.

The proper steps for assembling a door frame are as follows:

a. Knock the frame together.

b. Place the frame, rebate side up, on the workbench.

c. Clamp the posts to the head (use sash clamps or the wedges on the bench).

d. Nail a squaring strip to hold the posts at the correct distance apart.

e. Test for squareness from corner to corner (diagonally).

f. With the clamp still in position, fasten the joints.

g. Cut and nail the other squaring strip diagonally from the head to the post (Fig. 1, last page). This holds the frame square.

h. Cut the posts to the required length.

i. Drill the holes for the steel dowels and fix them. They should be long enough to anchor into the concrete floor.

j. Nail wooden spacers into the inside of the rebate. These keep the frame at the correct height during the building operations (Figs. 1 & 2, page 70).

k. Finish off the frame. The priming coat of paint should be applied to the external woodwork before it is fixed in place.

When timber with a small section, for example 5 x 7 cm or 5 x 10 cm, is used for the posts, an extra squaring strip should be fixed horizontally in the middle of the frame. This prevents the pressure of the blockwork from distorting the frame.

Installing door frames

Frames which are improperly built-in can cause problems later, when the plastering is done or the doors are hung. Therefore we must give special attention to setting the frames properly.

A door frame should be fixed in such a way that the door can open flat to the wall. Otherwise, the door will form a lever to the frame, and the hinges will be forced out when the door swings wide open suddenly.

Door frames can be fixed in position either during the masonry construction or after the walling has been completed.

- SETTING FRAMES DURING MASONRY CONSTRUCTION: The first frames to be set are those of the outside walls. When the masonry work has been built to floor level, the door frame is placed in position according to plan and at the correct height, and held there by means of wedges (Fig. 1, a, next page).

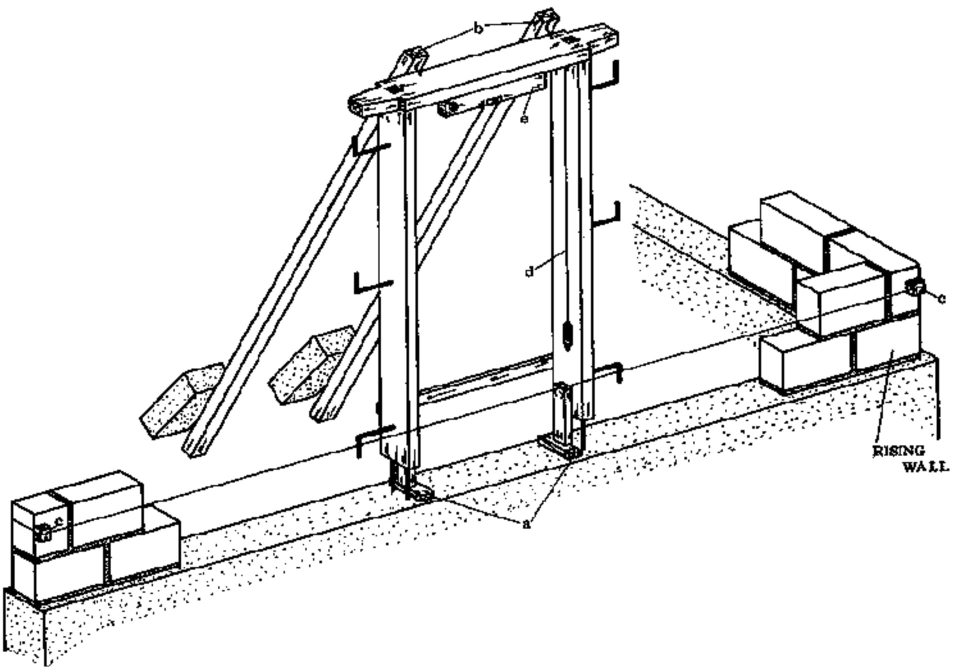

Fig. 1

To hold the frame in position during the following building operations, we use struts. These are braced against blocks on the ground and lean up to the head of the frame, where they are secured with two nails (Fig. 1, b, and Fig. 2, next page).

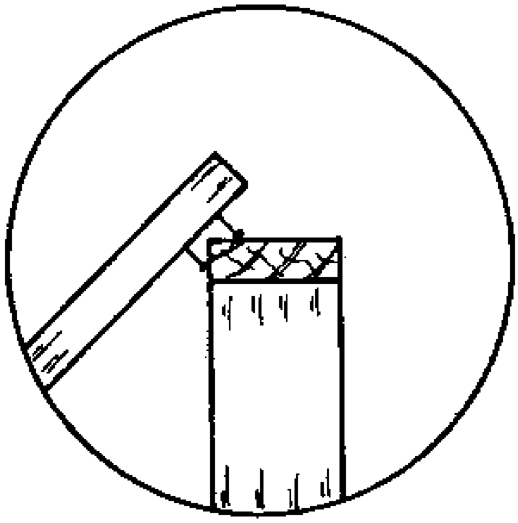

Fig. 2

The masonry line is used to align the frame with the face of the wall. The line is fixed at the two corners of the wall and two small wooden blocks are used to hold the line out from the wall by the same amount as the thickness of the future render layer; so that the line shows the position of the face of the render on the finished building (Fig. 1, c, next page).

The line should be free (not touching any frame or block) from corner to corner of the building. It should be separated from the frame faces by about a trowel's thickness (Fig. 3, next page).

Because the posts are long, the plumb bob is the best tool for making sure that the frames are straight and upright. Hold the bob at the inside top of the frame, so it has room to swing freely (Fig. 1, d). Check both posts (Reference Book, page 5)

To adjust the frame, the wedges are knocked a bit in or out, thus raising or lowering one post at a time until the frame is straight.

The face of the frame can be plumbed at the same time. To do this, step to one side of the frame and sight the edges of the post and plumb line. A helper should stand by the struts and either “give” or “pull” them until the frame is straight. Take care that the space between the face of the frame and the mason line remains correct (Fig. 3).

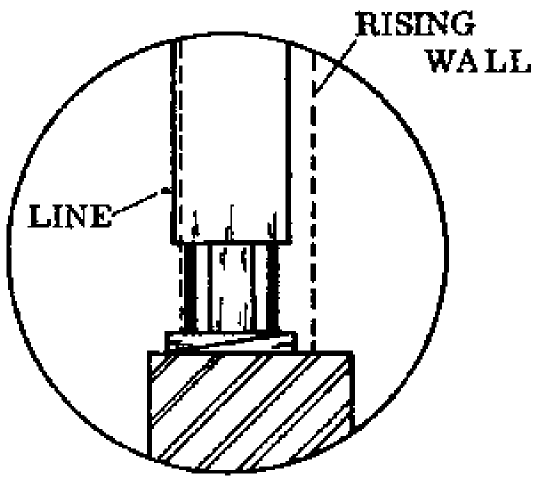

Fig. 3

As a final check, the soffit (underside) of the head can be levelled with a spirit level (Fig. 1, e).

- REMEMBER: Be sure that the face of the frame is in line with the mason line, not flush with the face of the blocks. When the building is finished, the render surface and the face of the frame should be flush.

Make sure that the frame remains at the correct height, so that the steel cramps can fit into the bedjoints and the frame does not get twisted.

After several courses of blocks have been laid, the frame should be rechecked to make sure that it has not become distorted by the blocklaying. Blocks should be laid on both sides of the frame at the same time, so that it does not get pushed out of plumb.

The struts and braces are taken off only when the blockwork has reached the head of the frame.

If more than one frame is erected, walk around the building and look from a distance to compare the frames with each other and make sure that they are all in the correct alignment.

- SETTING FRAMES AFTER THE WALLING HAS BEEN COMPLETED: In this method, the installation of the frames is postponed until the roof construction is complete, in order to reduce the risk of damage to the woodwork from the rain and sun.

Hardwood or plastic plugs (Reference Book, page 215) are driven into the bed-joints to serve as anchors for the frame. The frame is then put into position and nailed or screwed to the plugs.

NOTES:

WINDOW FRAMES

Types of window frames

The function of a window frame is to admit light and air into the building. The most common frame used in Ghana is the solid window type, consisting of an outer frame into which a casement or louvres are fitted.

The most common window frame consists of four parts (Fig. 1):

- Two posts (a)
- One head (b)
- One cill (c)

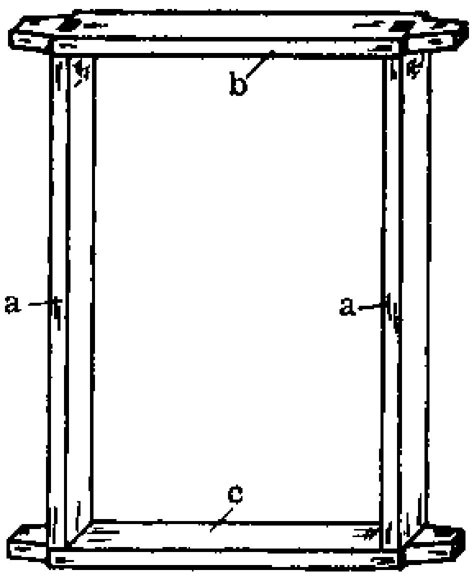

Fig. 1

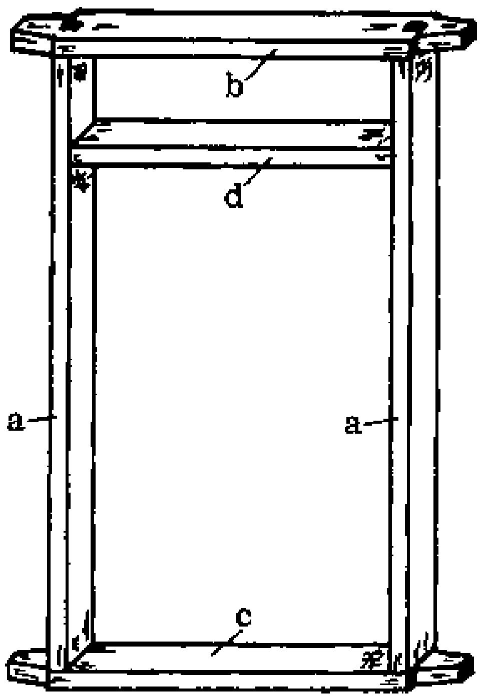

Fig. 2

When additional light and ventilation are needed, a fanlight can be added. The extra piece is called a transom (Fig. 2, d).

If wider windows are required, a mullion (Fig. 3, e) can be added.

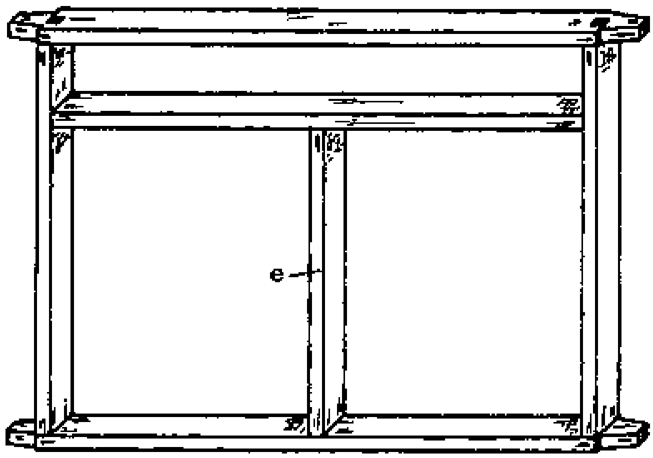

Fig. 3

Any of these frames can be made with a rebate or with beads, or with a combination of the two (Figs. 4 & 5).

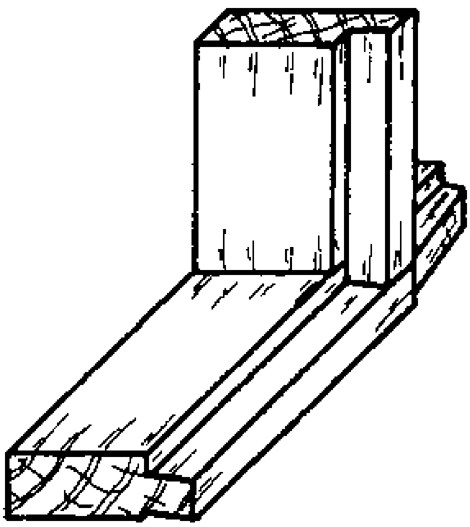

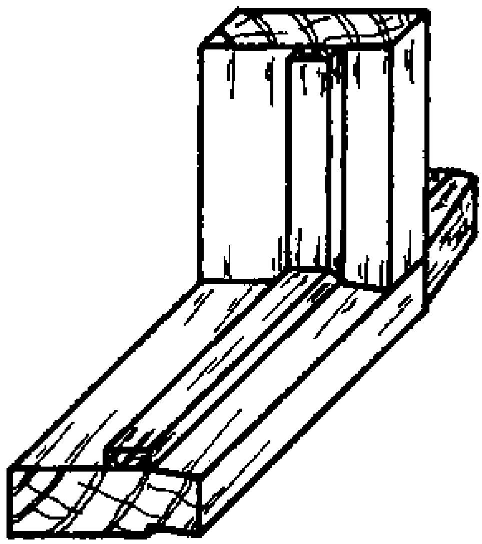

Fig. 4 WITH REBATE

Fig. 5 WITH BEADS

For a list of the advantages and disadvantages of beads or rebates, see the section on door frames. If beads are used, they are fixed after the casement is installed, so they can be adjusted (see Drawing Book, pages 42 & 72).

Measurements of window frames

Before you start constructing a window frame, you have to decide:

- whether the window will have shutters, louvres or any other kind of closing;
- if there will be any burglar proofing, and if so what kind;
- if any mosquito proofing is required;
- and where the window will be installed (does it have to be opened frequently, for example).

All these factors can influence the kind and sizes of timber we use, and the size of the frame itself.

- REMEMBER: Window frame measurements which are given with no further explanation are always inside measurements.

NOTES:

- MEASUREMENTS OF TIMBER SIZES FOR WINDOW FRAMES: A very common size of timber used for window frames is 7,5 to 10 cm wide, by about 5 cm thick. This size of timber is readily available and relatively inexpensive. If large frames are required, the timber size should be about 15 cm by 5 cm.

- MEASUREMENTS WITH RESPECT TO THE CASEMENTS: The height and width of the window frame are partly determined by the kind of casements which will be used. If ready-made casements are used, the frame has to be the right size to fit them. If the casements are to be made, consider the timber sizes which are available and choose the size of the casements according to the size of the boards, to avoid waste.

- MEASUREMENTS WITH RESPECT TO LOUVRES: If glass louvres will be in stalled, their size will determine the height and width of the frame. Find out the size of the louvre first, then start making the frame, not the other way around. Mistakes here can be very expensive!

Also make sure that there is room enough to open and close the louvres and that the mosquito proofing, if present, does not interfere with them.

Louvre windows will be discussed thoroughly in one of the next lessons.

The type of burglar proofing which is chosen will also affect the construction of the window frame, and we will consider this in one of the later lessons.

Steel cramps

If steel cramps are used to hold the frames, they should be positioned to fit into the horizontal joints (bedjoints) of the walls (see Measurements of Door Frames section, page 69).

Joints for window frames

When you are marking out the joints, first decide whether the frame is to have a rebate or beads.

In general, the joints for window frames are the same as those for door frames (see the section on Joints for Door Frames, page 65).

NOTES:

- SEQUENCE OF OPERATIONS FOR MAKING A WINDOW FRAME WITH TRANSOM AND MULLION: The joint for the transom-mullion connection should be a stub tenon, to prevent water from entering the mortice at the top.

Take care when marking out and cutting the shoulder of the tenon where it meets the slope of the cill, so that they fit together exactly (Drawing Book, pages 46, 47, 70, 71 and 72).

a. Study the drawing.

b. Prepare the cutting list.

c. Select the timber.

d. Cut the timber to size.

e. Plane the timber to size and make the face marks.

f. Mark out the joints. Take special care in marking out the shoulders of the joints. The head, transom, and cill must be marked out together, as the two posts and the mullion must also be marked out together.

g. Mortice the head and cill, and make stopped mortices in posts and transom.

h. Rip the tenons for the transom, posts and mullion.

i. Rip the horns on the head and cill.

j. Prepare the rebate and throating if required.

k. Cut the shoulders of the tenons.

l. Smooth and clean up the inside edges.

m. Paint the frame with a primer coat, especially at the joints.

- ASSEMBLING THE WINDOW FRAME:

a. Place the frame on the workbench, with the rebated side up.
b. Fix the transom to the posts.
c. Fix the mullion to the transom.
d. Clamp the head and the cill to the posts and mullion.
e. Test for squareness at the four corners, and check the diagonals.
f. Cut and nail the squaring strips.
g. With the clamps still in position, fasten the joints.
h. Finish off the frame.

Cells of window frames

The cill should have a slope on the outside, to keep rain out of the building. This slope can be constructed by chamfering the cill (Fig. 1) or by a combination of chamfering and rebating (Fig. 2).

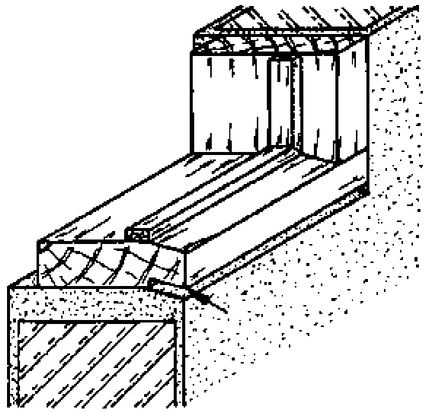

Fig. 1

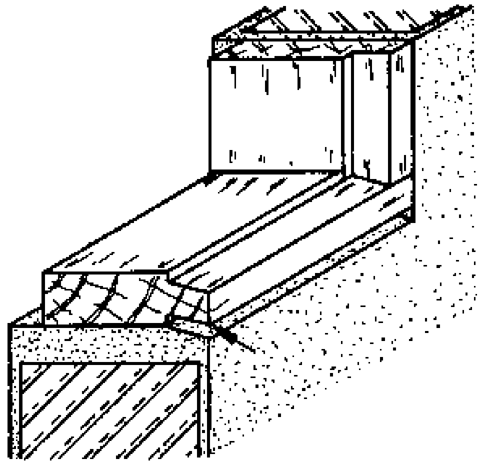

Fig. 2

It is important to prevent rainwater from entering the space between the cill and the wall, where it could cause the cill to rot. A throating at the soffit of the cill (Figs. 1 & 2, arrows) allows water to drip down instead of running back under the cill. The angle of the throating should be parallel to the slope of the cill.

Another way to keep water out is to fix a metal strip, called a drip, under the cill (Figs. 3a & 3b). The drip is fixed in a sawcut in the underside of the cill, so that the water which drips onto the metal will not run inwards. The slope of the metal comes to just inside the face line of the cill (Fig. 3b).

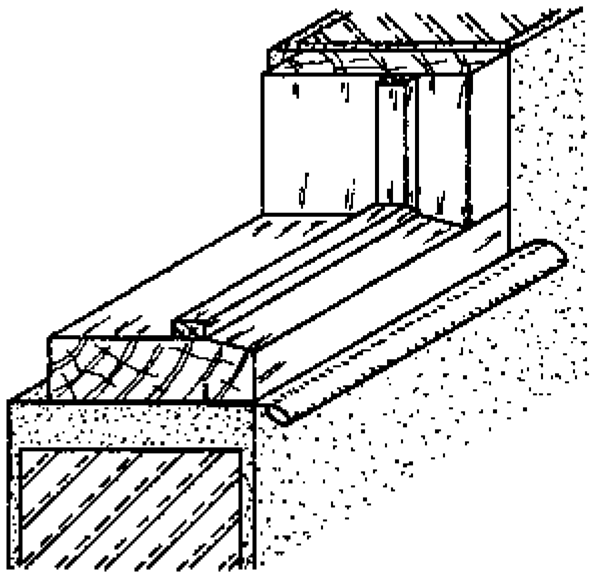

Fig. 3a

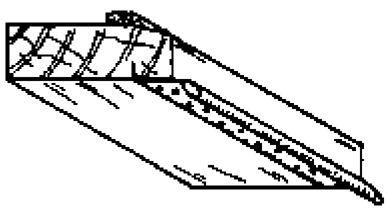

Fig. 3b

The metal strip should extend past the ends of the cill. If it does not, the water which runs down the posts of the frame will damage the render around this part at the corners of the frame.

It is also possible to combine the two solutions, by fixing a metal strip onto the throating.

Every cill should have some kind of protection to keep water from entering between the cill and wall. All cills must come out at least as far as the finish line of the render.

As an alternative to the wooden cill, the window can be constructed with a plaster cill. The posts are fitted with steel dowels and a concrete shoe. The construction is similar to that of a door frame with a concrete shoe (Fig. 4, also see Concrete Shoe, page 71).

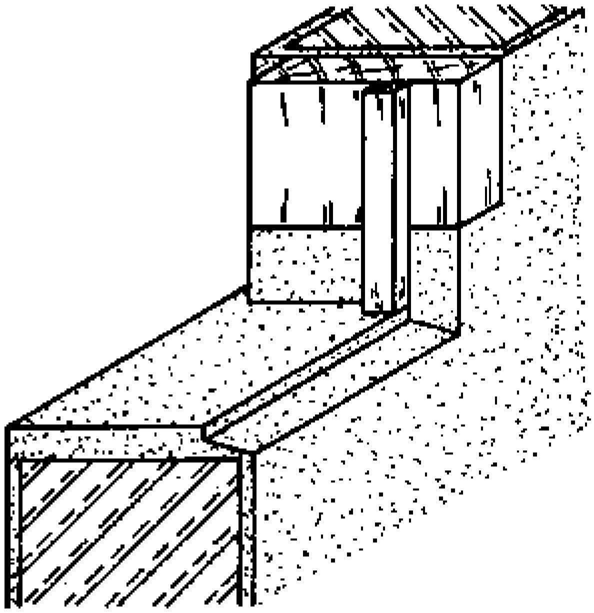

Fig. 4

NOTES:

Heads of window frames

Some protection must also be added at the head of a window frame to prevent any water from entering the space between the head and the lintel and causing damage to the wood. The simplest method is to fix a metal strip similar to the one on the cill. The part of the strip which is plastered over should be bent slightly upwards to prevent water from entering (Fig. 1a, arrow).

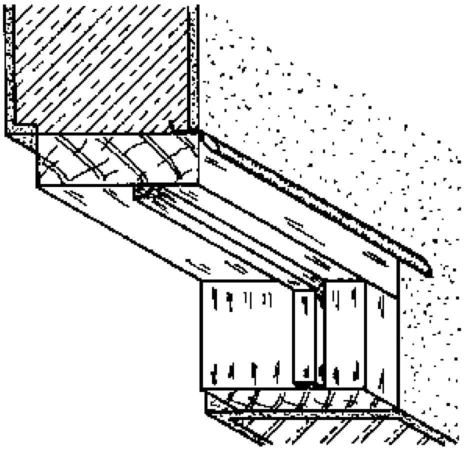

Fig. 1

Note that the line of nails is staggered so that the drip (or weather strip) is firmly secured to the head (Fig. 1a). Otherwise, movement of the strip during heavy rains or storms would probably loosen the render.

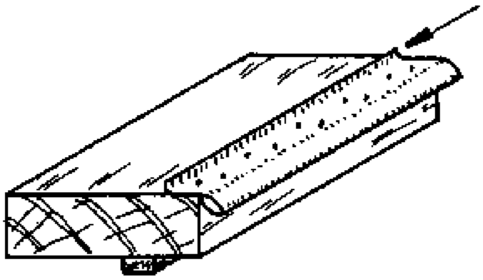

Fig. 1a

These metal drips may be put on when the frame is set up, or left until just before the rendering is done.

An alternative method would be to fix wooden battens, shaped as shown in Fig. 2, on the face of the window head. This method gives a more satisfactory appearance to the window frame.

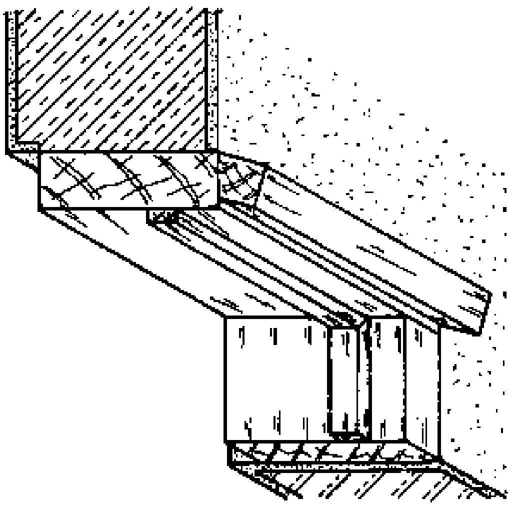

Fig. 2

A combination of both these methods is also possible (Fig. 3).

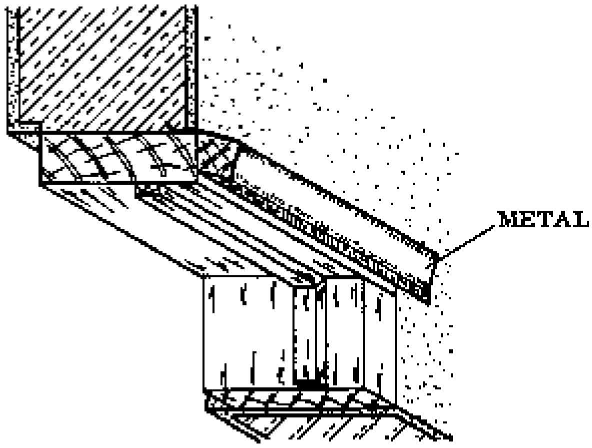

Fig. 3

The importance of fixing weather strips on both the cill and the head of the frame cannot be over-emphasized. They are easily overlooked during the construction of the building and one might be tempted to do a quick job and leave them out. But in the long run the strips will save money by preventing water damages to the wood and expensive repairs.

The same kind of protection can be applied to the heads of door frames.

The heads and cills of window frames can be provided with horns to give an additional secure fixing to the wall (see Heads of Door Frames).

NOTES:

Installing window frames

Installing window frames is similar to installing door frames (see Door Frames section). A window frame should be fixed in such a way that the casement can open flat to the wall, otherwise the casement will form a lever with the edge of the wall. This can cause the hinges to be forced out when the window is blown open by the wind.

Window frames can be installed either during the construction of the walls, or after the walling has been completed.

- INSTALLING THE FRAMES DURING THE WALL CONSTRUCTION: When the blockwork has reached window cill level, the frames can be set and aligned in the same way as a door frame. The chief difference is that in the window frame the horizontal members are usually longer than the vertical members, and for that reason more attention is given to levelling the head and cill of a window frame than to levelling the head of the door frame (Fig. 1).

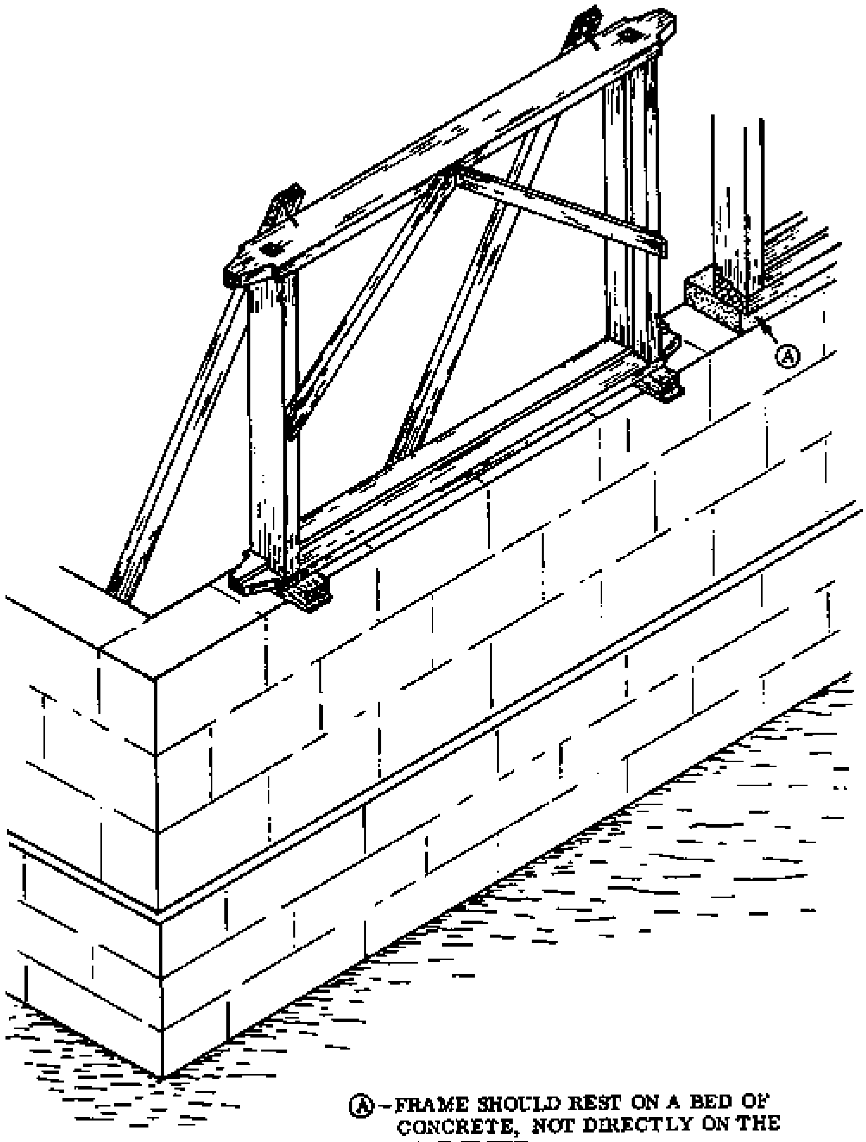

Fig. 1

If more than one frame is installed, check them by comparing from a distance to see if they are aligned, as with door frames.

- INSTALLING THE FRAMES AFTER WALLING HAS BEEN COMPLETED: This second method is not so commonly used, but it also has its advantages. In order to keep the frames clean, square and dry, they are kept in a store until the building is roofed. Openings are left in the blockwork to receive the frames, horns, and steel cramps. The frame is set into this opening and the steel cramps and horns are secured with mortar.

Sometimes hard wood or plastic plugs are used to secure the frame in the wall.

- NOTE: The window frame does not rest directly on the landcrete wall; this would provide a path for moisture to get into the landcrete and weaken or damage it. The window frame is set upon a bed of concrete or cement mortar (Fig. 1, A).

NOTES:

WALLING UP BETWEEN FRAMES

First mark the positions of the blocks on the outsides of the frames. Mark both the height of the blocks (Fig. 1, a) and the face line of the blockwork (Fig. 1, b). The face line of the blockwork will be inside the face line of the frames, because the faces of the frames must be flush with the finish line of the render.

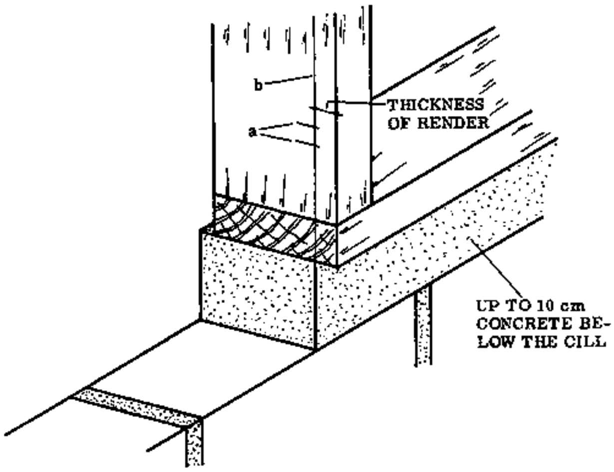

Fig. 1

- NOTE: The window frame does not rest directly on the landcrete blocks. This is because moisture could enter between the cill and the landcrete and get into the blocks, where it would cause them to swell and fall apart. To protect the landcrete blocks, the cill must rest upon a bed of concrete which can be up to 10 cm thick. By adjusting the height of this concrete bed, the anchorage irons and the heads of the frames can be brought into alignment with the bed joints of the blocks.

The first blocks laid are those which touch the frames. The courses in between are completed and aligned with the aid of either a straight edge, spirit level, or mason line, depending on the distance between the frames.

Pay special attention to the anchorage irons of the frames. Make sure that they are not just embedded in the bed joint; instead make grooves in the bed faces of both blocks, which can be filled with mortar to anchor the iron and to protect it from rust (Fig. 2).

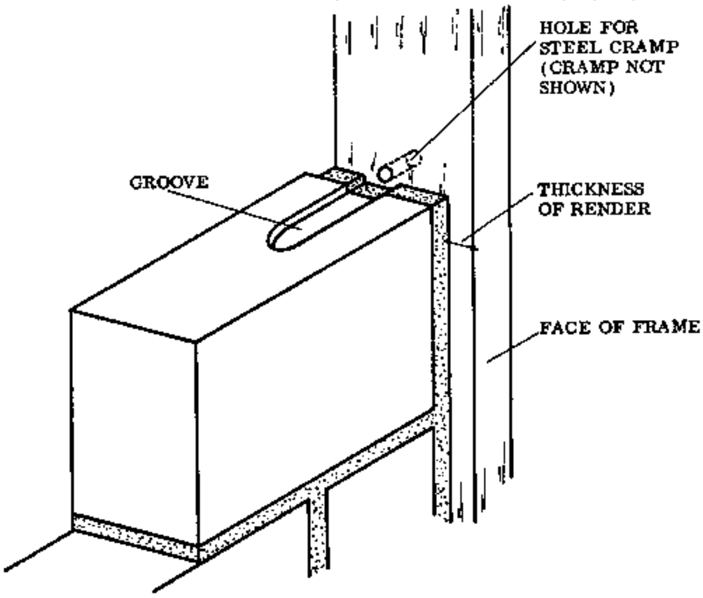

Fig. 2

MOSQUITO PROOFING

It is often necessary to install mosquito wire on doors and windows. The wire screen is normally attached with wooden beads directly onto the window frame. For louvred windows it is fixed on the outside. For casement windows which open outwards, the wire screen has to be attached on the inside or onto a separate framework which is hinged onto the inside of the frame.

A separate framework for the mosquito wire is commonly constructed on doors. Make this framework like a panelled door (this door and its construction are described in one of the following sections, under Doors). Use one or two braces in the framework to keep the door rigid. Often a spring is attached to the wire door to keep it in the closed position.

BURGLAR PROOFING

It is practically impossible to keep burglars out of a house when the occupants are away, but it is at least possible to make the house burglar proof to the extent that burglars cannot enter without making considerable noise and so alerting people in the area.

Types of burglar proofing for windows

- One of the most common methods is to fix mesh wire or expanded metal directly onto the frame, in a way that it cannot be torn off without making consider able noise or using a special cutting tool. Use strong beads to attach the wire to the frame and plenty of screws or nails (Fig. 1).

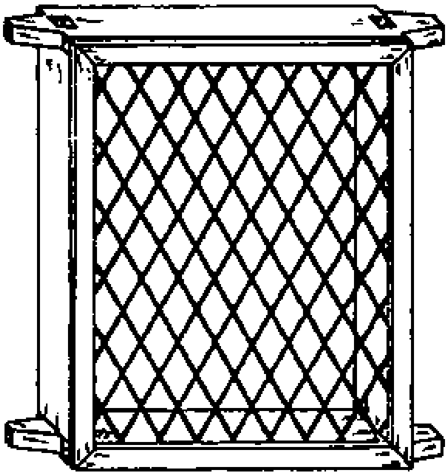

Fig. 1

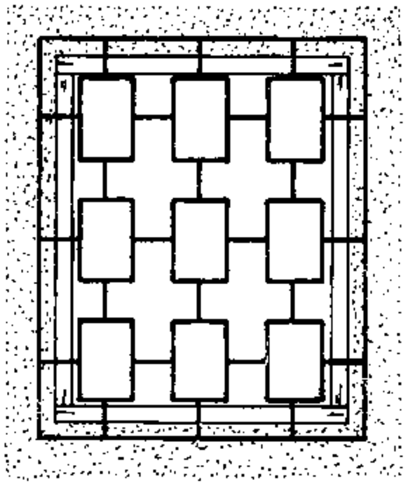

Fig. 2

- Sometimes burglar proofing is made from welded iron rods in different patterns and fixed directly into the wall around the window. It should be anchored well and deeply enough so that it cannot be pulled out (Figs. 2 & 2a).

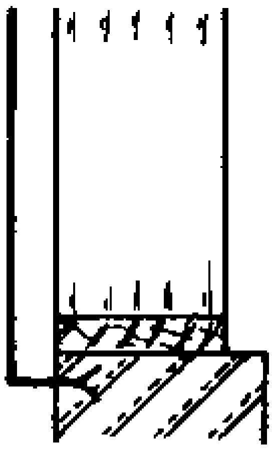

Fig. 2a

- Another way to make a window safer is to fix iron bars horizontally into the frame. This must be done during the assembly of the frame. If some of the bars stick out at the sides of the frame, they can also be used as an additional anchor for the frame in the wall (Fig. 3). If the span between the posts of the window is large, the horizontal bars may need to be reinforced by having vertical bars welded onto them, so that they cannot be bent up or down to allow the burglar to enter.

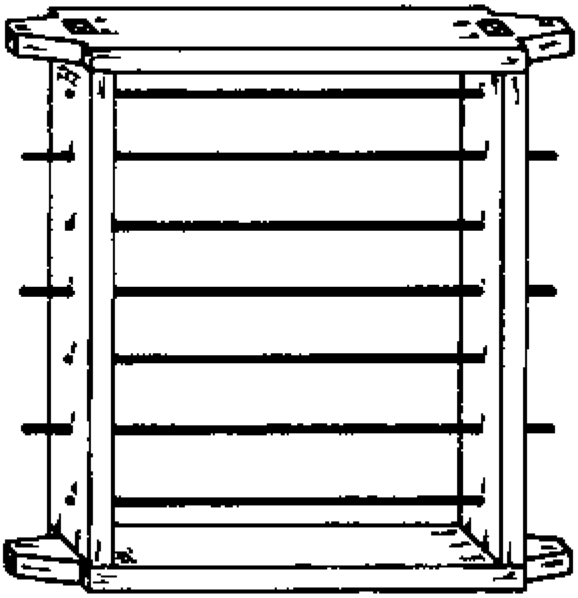

Fig. 3

The bars can also be applied to windows fitted with louvres. In that case, the iron bars are placed between the louvre glasses (Fig. 3a). They must be placed in such a way that they will not obstruct the louvres when they are opened.

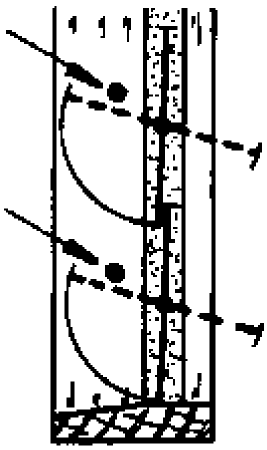

Fig. 3a

- A relatively inexpensive and reliable burglar proofing is the wooden type. During assembly of the frame, this burglar proofing is installed into mortices made in the head, cill and posts of the frame. The separate pieces are fitted together with halving joints in a crosswise pattern (Fig. 4).

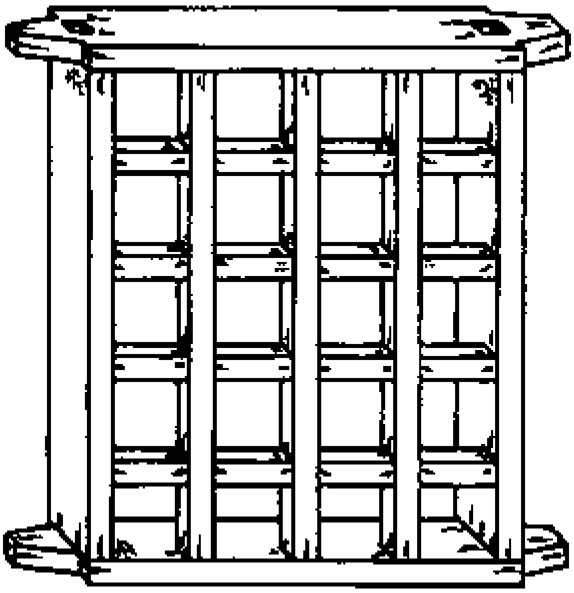

Fig. 4

If outward-opening casements are installed in a frame, install the burglar proofing on the inside face of the frame. Leave a small opening in the burglar proofing for the hand to pass through in order to open and close the window.

For louvred windows the burglar proofing is always installed on the outside.

DOORS

The door is an essential part of the building structure. It must have the right proportions: not so large that it weakens the wall of the building, and not too small either. People, goods, and equipment, according to the uses of the building, have to be able to pass through the door easily.

Types of doors

In Rural Building, doors are classified as follows:

- Ledged and battened doors (Fig. 1)

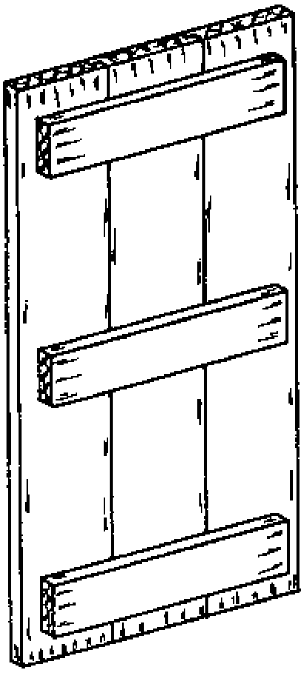

Fig. 1

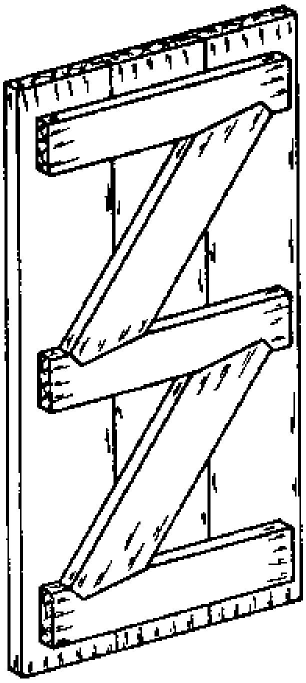

Fig. 2

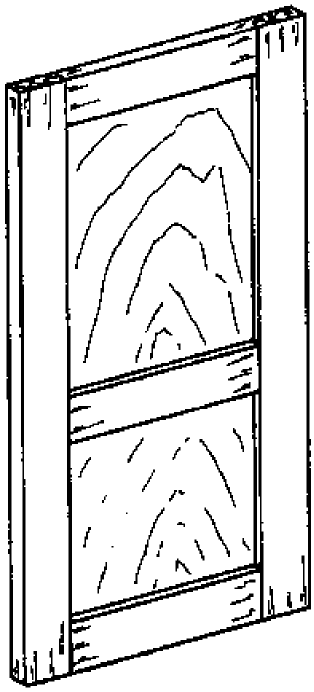

Fig. 3

- Ledged, braced and battened doors (Fig. 2)
- Panelled doors (Fig. 3)
- Flush doors (Fig. 4)

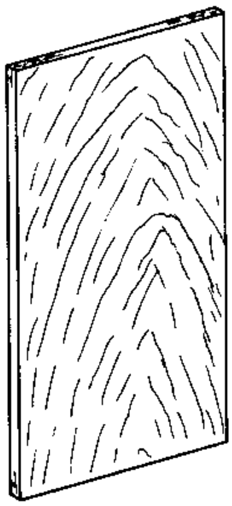

Fig. 4

For an outside door which is exposed to rain and sun, it is best to choose a weather resistant door like a battened or panelled door. If the door is protected inside the building then a flush door made of plywood will be satisfactory.

Sizes of doors

The size of the door depends on:

- Where it will be used (entrance doors will naturally be slightly larger than other doors, and bathroom doors will be a bit smaller)

- The materials which are available (plan the door according to the sizes of wood and plywood which are available).

A common door size is 198 cm by 76 cm. This is wide enough to allow most sizes of furniture to pass through. Nearly all modern furniture has one dimension which is 76 cm or less: a standard table, for example, is 76 cm high.

Living room and bedroom doors are sometimes larger for reasons of ventilation.

Position of the door

Outside doors should always open to the outside. This makes them more weatherproof and easier to open in case of an emergency such as a fire, when you want to get out quickly.

Try to position the door so that you cannot look directly into the room from the outside.

Finishing treatment of the door

All doors should be painted or varnished, or preserved in some way. A good paint job preserves the door from decay and reduces shrinkage and swelling, thereby lengthening the life of the piece (Reference Book, pages 200 & 201).

Paint is especially important for flush doors. They should be well painted and the edges of the door should be soaked in paint.

Ledged and battened doors

These doors consist of vertical boards called battens (Fig. 1, a) which are nailed or screwed to the horizontal members, called ledges (b). Often the battens are a-bout 15 to 18 cm wide and 2 to 3 cm thick. Doors made with narrow battens like these have a better appearance.

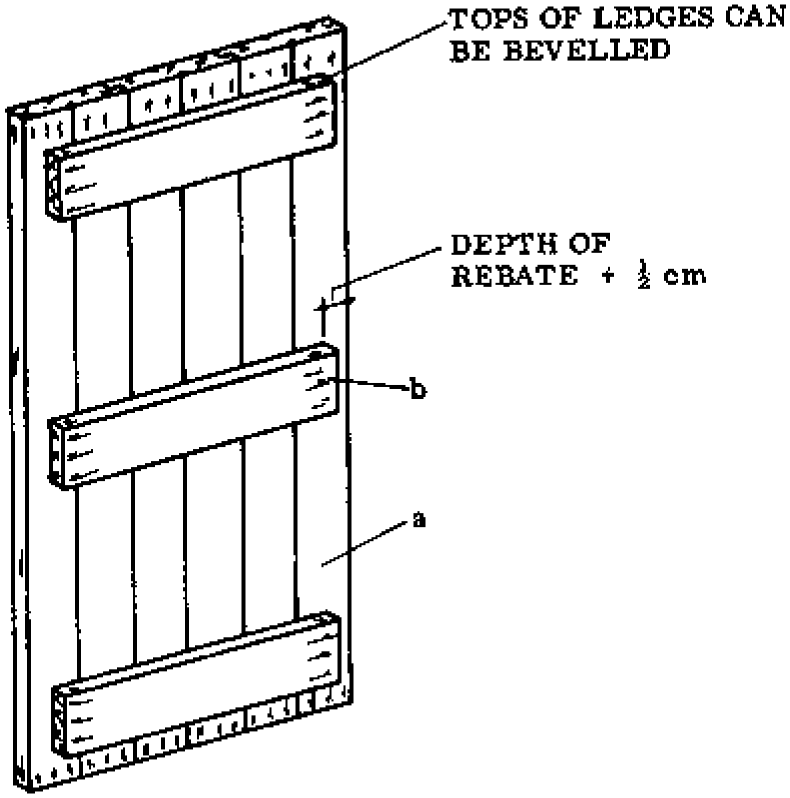

Fig. 1

Because of the climate in the northern part of Ghana, here it is better to use boards which are up to 30 cm wide. These wider boards are less likely too twist and warp at the ends (Fig. 2). The boards should be well seasoned so that they won't crack at the ends.

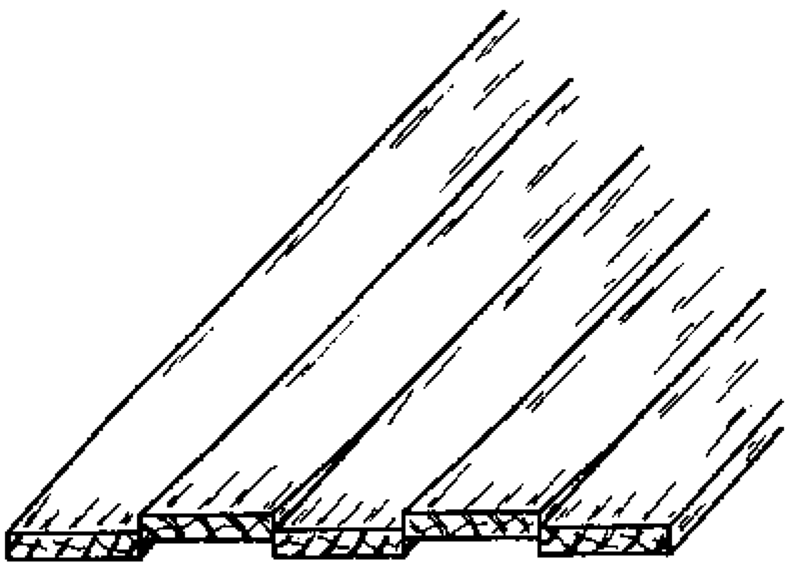

Fig. 2

The width of this door is usually the width of 2 1/2 or 3 boards (Figs. 3 & 4).

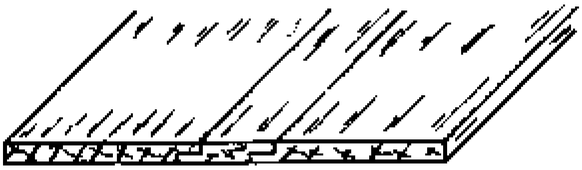

Fig. 3 2 1/2 BOARDS

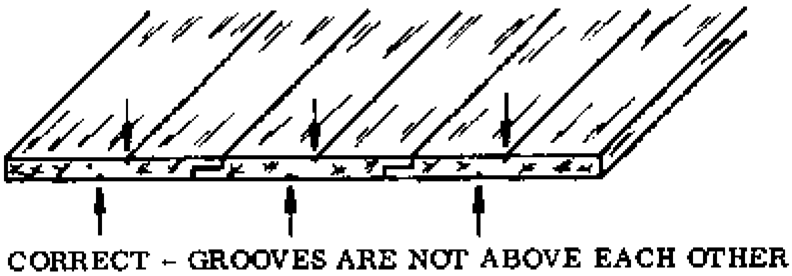

Fig. 4 3 BOARDS

Grooves can be made in the wide battens, to produce a pleasing appearance as if the door were made with narrow battens (Fig. 4). The grooves should not be made from both sides of the door at the same spot, above each other, because this will make the door weak (Fig. 5).

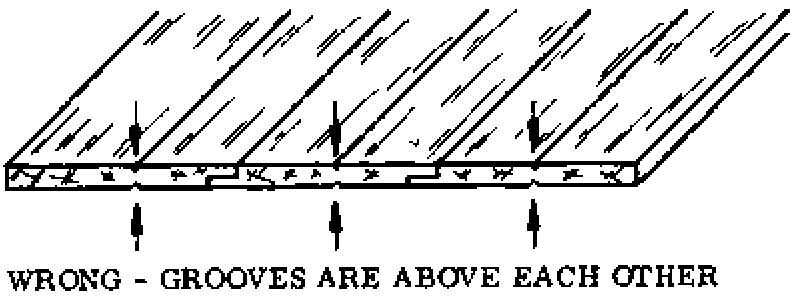

Fig. 5

The ledges should be as long as possible to prevent cupping of the battens, and to provide a solid attachment. The length of the ledges will be the width of the door minus the depth of the two rebates or beads in the door frame, and minus a 1/2 cm allowance on each side (Fig. 1). The ledges are usually 2 to 3 cm thick. When this construction is used for an external door, the tops of the ledges should be bevelled (Fig. 1).

The ledged and battened door is the simplest type of door. It is often used for narrow openings. It is relatively cheap to construct, but unfortunately it tends to sag because of its weight.

NOTES:

- JOINTS FOR LEDGED AND BATTENED DOORS: We use special types of joints to connect the battens of this door. These joints are known as matchboarding joints.

A matchboarded door will have a good appearance even when the boards have shrunken and the joints are opening. Matchboarding joints are not glued like ordinary widening joints (Basic Knowledge, pages 130 to 136). They are left loose so that shrinkage can take place, and the battens are held together by the ledges.

In Rural Building we use two different matchboarding joints: the loose tongued joint (Fig. 1), and the rebated joint (Fig. 2).

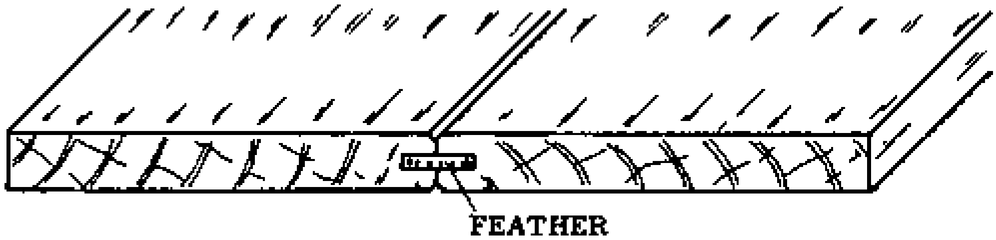

Fig. 1

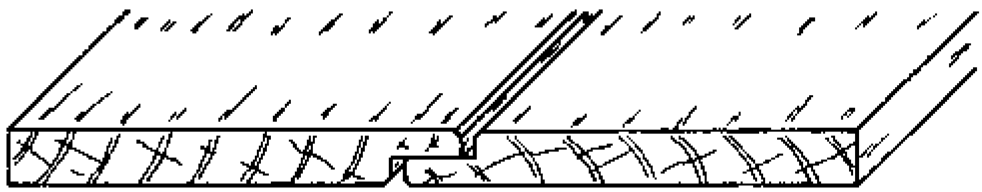

Fig. 2

The loose tongued joint has a tongue made of plywood. It is glued into only one side of the groove so that shrinkage can take place (Basic Knowledge, page 134).

There are several possible ways to make the rebated joints used in battened doors (Fig. 2).

When you assemble this joint, put a strip of wood in between the battens with the same thickness as the gap you want. This keeps the gap between the battens open as the door is assembled.

Any batten-type door made during the rainy season should be assembled with the matchboarding joints closed. If the door is assembled during the dry season, then the joints should be kept open (Fig. 2, also see Reference Book, pages 129 to 130). There should be enough allowance between the battens to allow them to swell up to 5% of the width of the board (for a 30 cm board size the gap will be up to 1 1/2 cm). If this is not done the door will start to warp when it swells in the rainy season.

- SEQUENCE OF OPERATIONS FOR MAKING A (NAILED) LEDGED AND BATTENED DOOR:

a. Study the drawing.

b. Prepare the cutting list.

c. Select the wood.

d. Cut the timber to the right size, leaving a 1 cm allowance in the length of the battens for finishing off.

e. Plane the timbers to size. Mark the boards (Basic Knowledge, page 88).

f. Plane the matchboarding joints.

g. Paint or varnish the edges of the battens.

h. Fit the battens together. Use a wooden or metal sash clamp to hold them.

i. Mark the positions of the ledges.

j. If the door is to be an external one, bevel the tops of the ledges.

k. Paint or varnish the inside faces of the ledges and battens.

l. Nail the ledges lightly to the battens (Fig. 3, previous page).

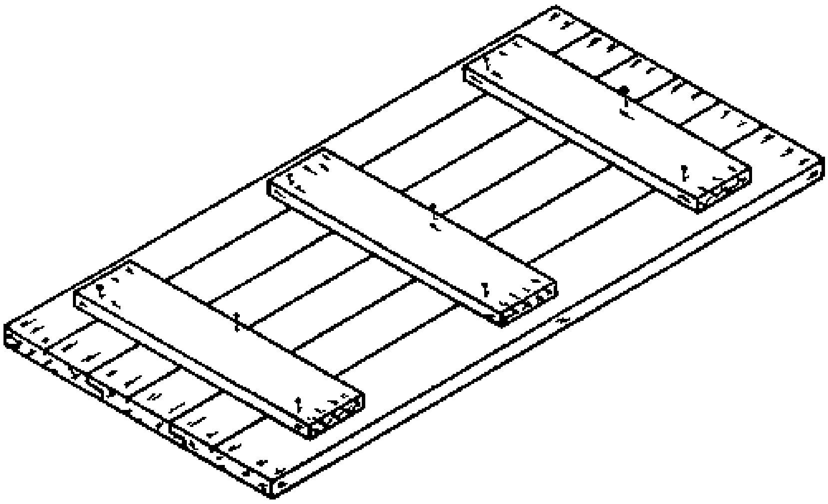

Fig. 3

m. Turn the door over put three pieces of wood under the ledges for support during nailing (Fig. 4, previous page).

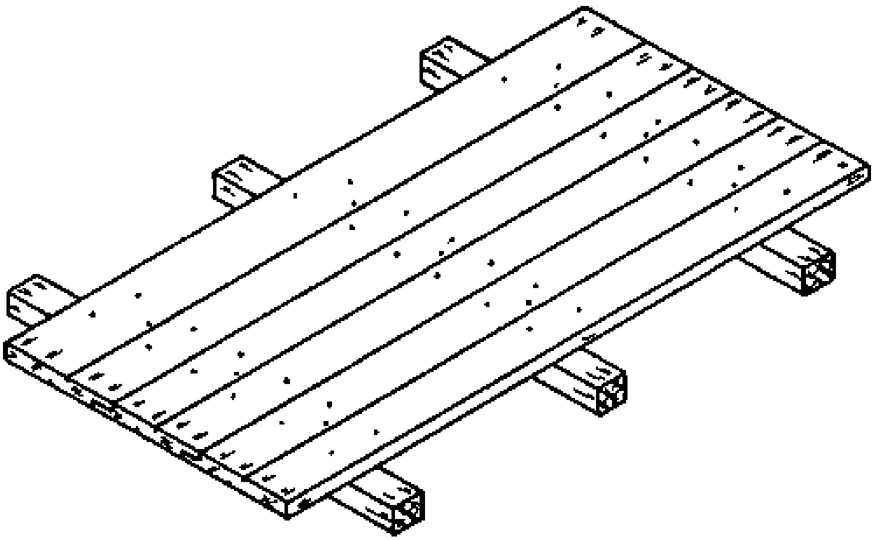

Fig. 4

n. Drive the nails through the battens and ledges and punch the heads under the surface of the wood.

o. Turn the door over and clench the nails. Remove the nails used in step “1” to nail the ledges lightly to the battens.

p. Cut off and level the battens at the top and bottom.

- REMEMBER: To avoid splitting the wood, always blunt the nails and drive them in a staggered pattern (Fig. 4, previous page). Clench all the nails to prevent them from being pulled out if the wood warps or swells. For clenching, the nails have to be long enough to go through the wood and out the other side by about 5 mm (Basic Knowledge, pages 92 to 94).

Ledged, braced and battened doors

This is a ledged and battened door to which braces have been added to prevent sagging (Figs. 1 & 2). These braces must slope upwards from the hinge edge of the door, and they are housed with a skew notch into the ledges (Drawing Book, page 73).

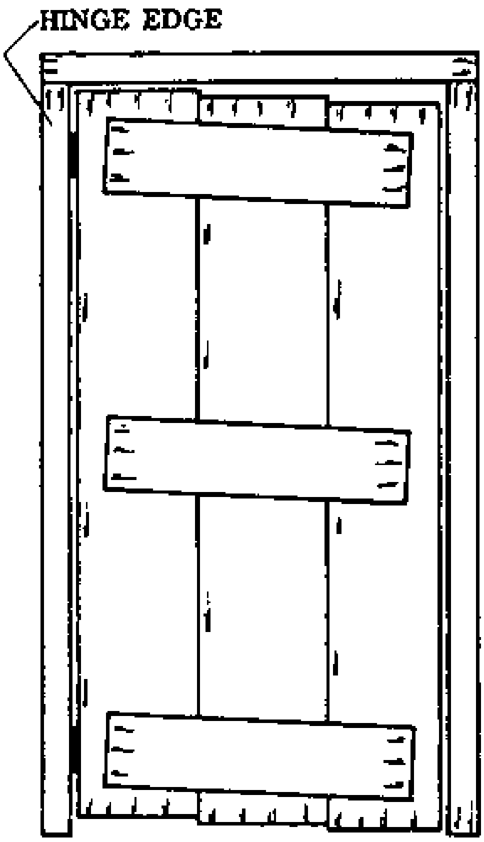

Fig. 1 NO BRACES - DOOR MAY SAG

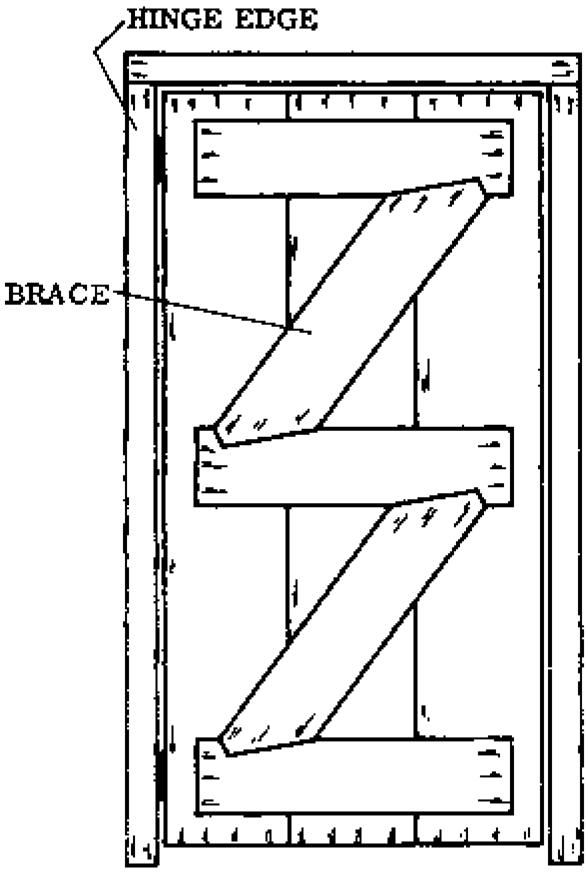

Fig. 2 BRACES PREVENT SAGGING

The skew notch helps to distribute the force from the weight of the door, so that the ledges have an even pressure on them. To achieve an equal distribution of the force, the angle of the short shoulder of the skew notch has to bisect (divide in two) the angle between the ledge and the brace (see Fig. 3, angle “x” = angle “y”).

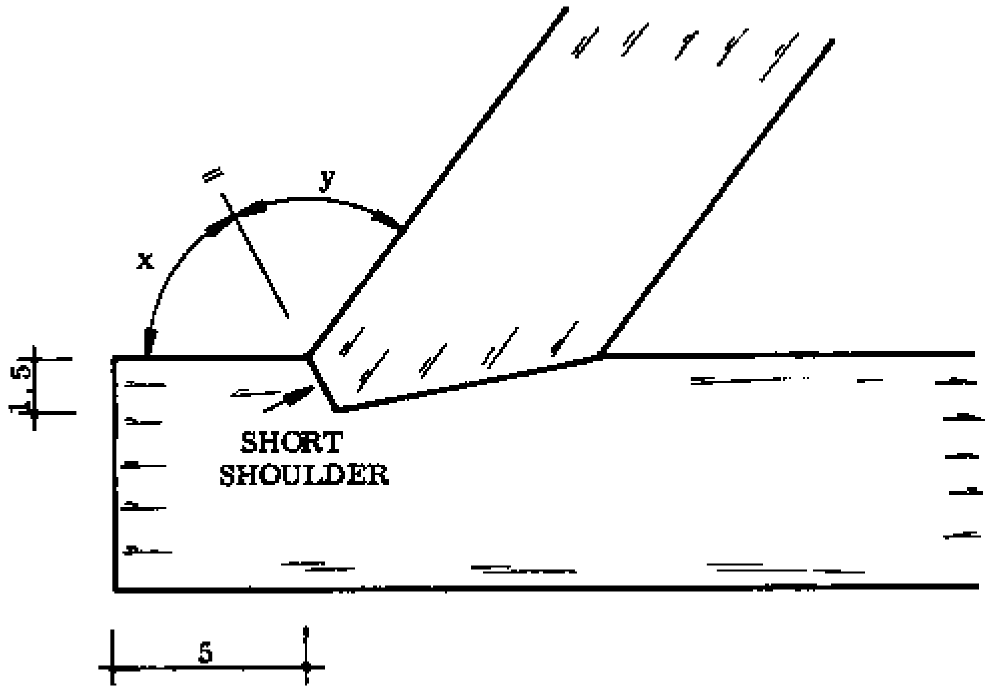

Fig. 3

The skew notch should start from a point 5 cm from the end of the ledge, to prevent shearing off. The depth of the skew notch will be 1,5 cm (Fig. 3).

This type of door construction may be used for large openings because of its greater strength.

The sequence of operations to make this door is the same as for the ledged and battened door. The braces are fitted to the door after the ledges are nailed lightly to the battens (step "1" in the construction).

- SEQUENCE OF OPERATIONS FOR MAKING A (NAILED) LEDGED, BRACED AND BATTENED DOOR: Proceed in the same manner as for the ledged and battened door,' until you reach step "1". Continue as follows:

m. Place the braces on top of the ledges (Fig. 1).

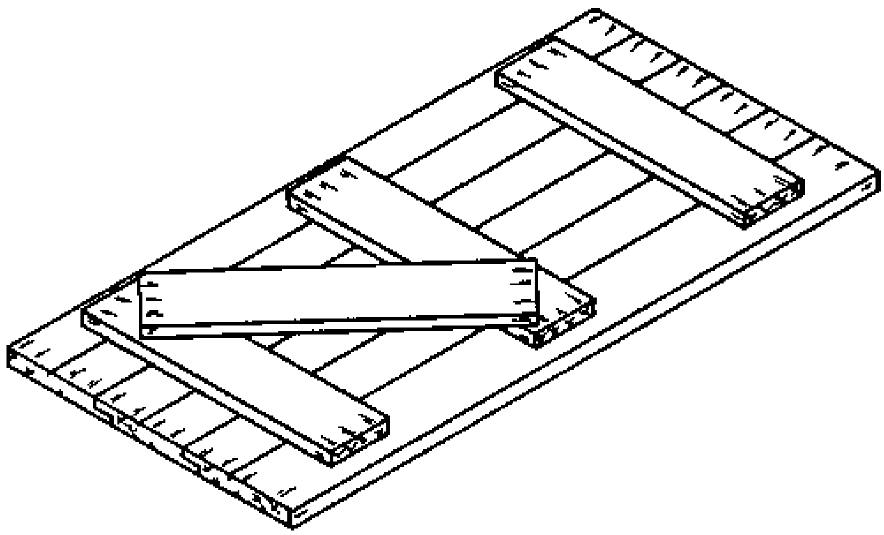

Fig. 1 (m)

n. Mark out the skew notches on each end of the braces.

o. Cut the braces according to the marks.

p. Place each brace in position and mark out the positions on the ledges (Fig, 2).

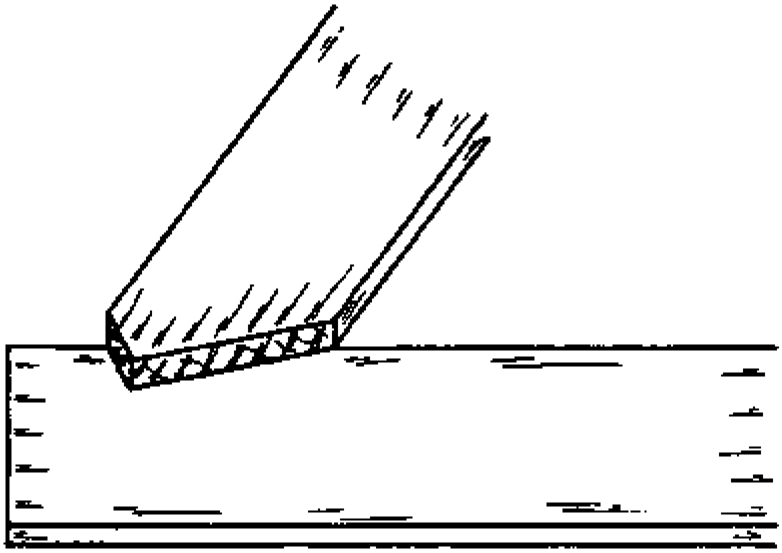

Fig. 2 (p)

q. Chisel the notches in the ledges (Fig. 3).

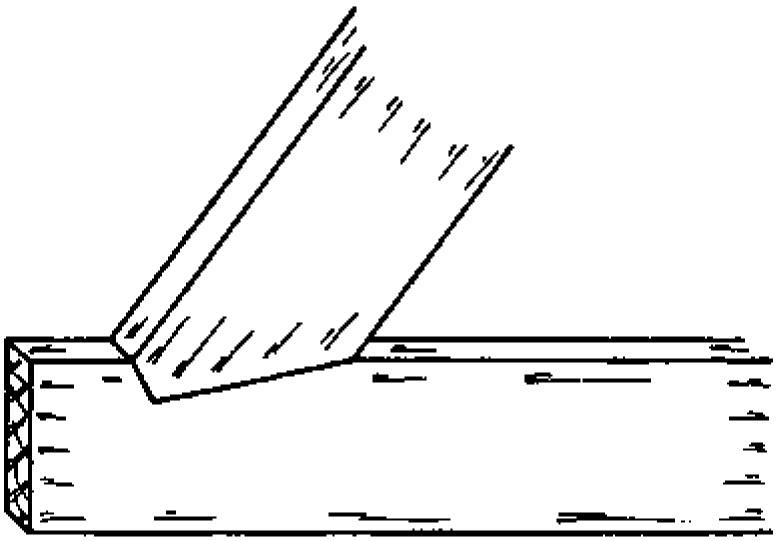

Fig. 3 (q)

r. Paint the skew notches.

s. Nail the braces lightly to the battens.

t. Turn the door over and place three pieces of wood under the ledges for support during nailing.

u. Drive nails through the battens, ledges and braces, and punch the nail heads under the surface.

v. Turn the door over and clench the nails. Remove the nails which were used to hold the braces and ledges lightly to the battens in step “s”.

w. Cut off and level the battens at the top and bottom.

NOTES:

Panelled doors

These doors (Fig. 1) consist of a frame made up of stiles (a), a top rail (b), a bottom rail (c) and sometimes an intermediate rail (d). Into this framework a plywood panel (e) is fitted. This panel may fit into a groove or a rebate (Drawing Book, pages 75 to 78).

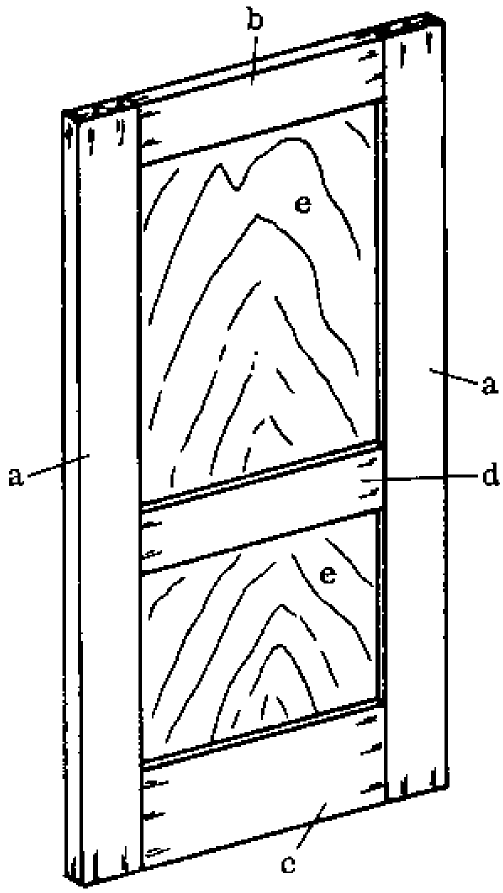

Fig. 1

- GROOVED-IN PANEL: This construction can be used only on doors which will be protected from the rain. If water enters the groove, it will not be able to dry out and can cause the plywood to rot (Fig. 2).

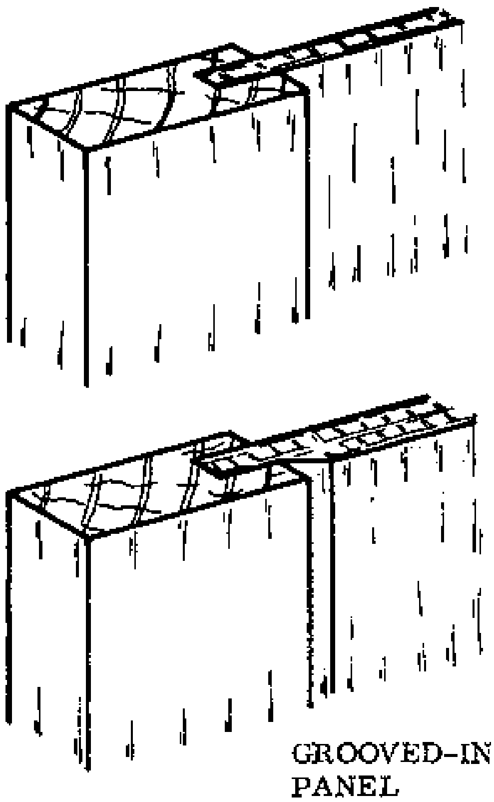

Fig. 2

If the door will be painted or varnished, the edges of the plywood panel and the inside of the grooves should be treated before the door is assembled.

The depth of the grooves is usually 1/3rd of the thickness of the members. The grooves are made as explained in the Basic Knowledge book, page 136.

The joints for this kind of door will be a haunched stub tenon for the top and bottom rails (Fig. 4), and a stub tenon for the intermediate rail (Basic Knowledge, pages 118 to 122). Note that the width of the tenon has to be reduced by the depth of the groove (Fig. 4, arrow) and the mortice is reduced accordingly.

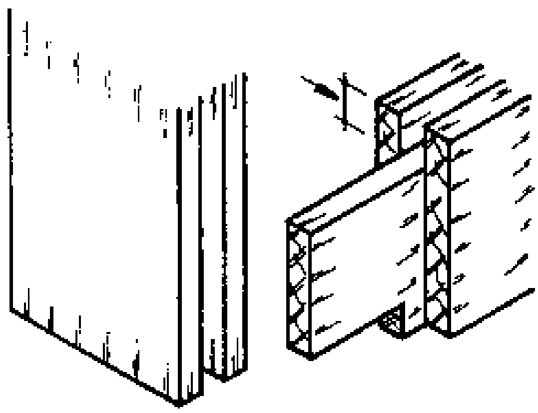

Fig. 4

- REBATED FRAMEWORK: When the panel will be fixed after the frame is assembled, a rebated framework is used. A rebate is made in the frame and the panel is secured with beads (Fig. 3).

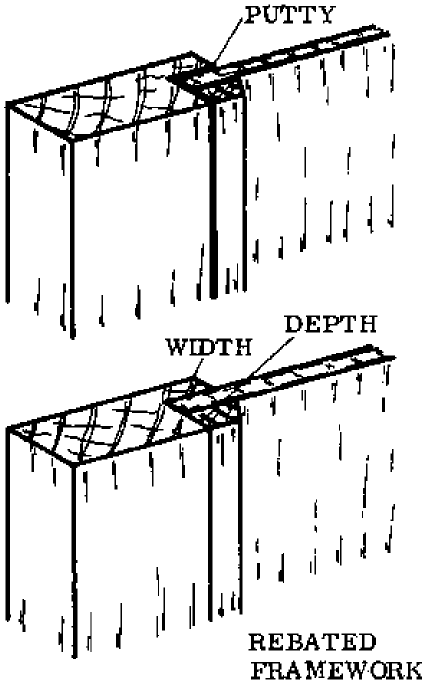

Fig. 3

Unlike the grooved-in panel door, this door can be used in places where it is exposed to rain. In that case, the plywood is set in putty so that water cannot penetrate inside, and the tops of the intermediate and bottom rails should be bevelled. The beads are also set in a thin layer of putty, then secured with nails.

If the door will be painted or varnished, the joints, edges of the plywood, rebates and beads all have to be painted before assembly.

The width of the rebate is usually 1/3rd of the thickness of the frame member, and the depth is usually 2/3rds of the thickness of the member (Fig. 3).

The joints for this kind of door will be haunched stub tenons for the top and bottom rails and stub tenons for the intermediate rail. Note that one shoulder of the tenon has to be longer to fill the rebate (Fig. 5, a). The widths of the tenon and mortice have to be reduced by the size of the rebate (Fig. 5, b; also Drawing Book, page 78, and Basic Knowledge, pages 118 to 120).

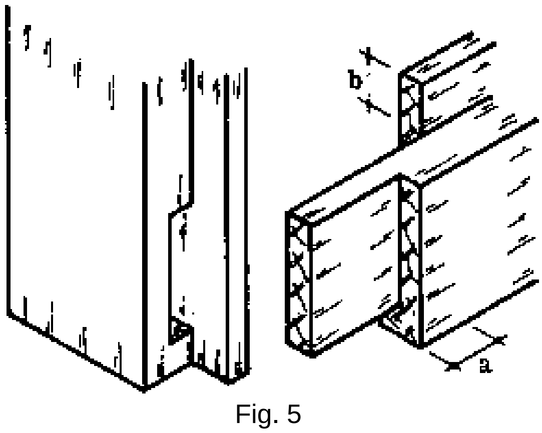

Fig. 5

NOTES:

- TIMBER MEASUREMENTS FOR PANELLED DOORS:

Stiles and top rail - 3 to 4 cm thick, 10 cm wide
Intermediate rail - 3 to 4 cm thick, 10 cm wide
Bottom rail 3 to 4 cm thick, 15 to 20 cm wide

- HOW TO PREVENT A PANELLED DOOR FROM SAGGING: Very often panelled doors will sag after a certain length of time. This is due to the joints drying out and loosening, and to the weight of the door.

The key to the door's ability to resist sagging is the plywood panel. For this reason the panel must be properly secured and fit tightly into the frame.

The tenons must also be well secured. If we can prevent the joints from opening we prevent the door from sagging. A good method of securing the joints is to nail through the joint and pinch off the heads of the nails. They should only be long enough so that they can be punched under the surface but do not come through the other side of the frame (Fig. 1b).

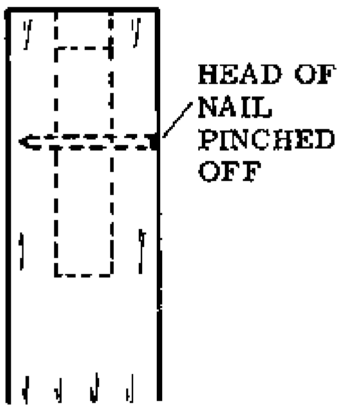

Fig. 1b

Note the staggered positions of the nails in Fig. 1a on the left. This prevents the nails from splitting the wood.

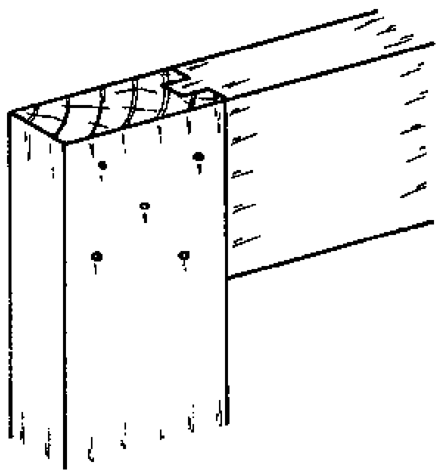

Fig. 1a

On the hinge stile of the door, the joints tend to pull apart at the lower edge. To prevent this, fix strips of sheet metal at the top hinge corner and at the lower corner opposite from the hinge stile. Use small nails to fix the metal (Fig. 2).

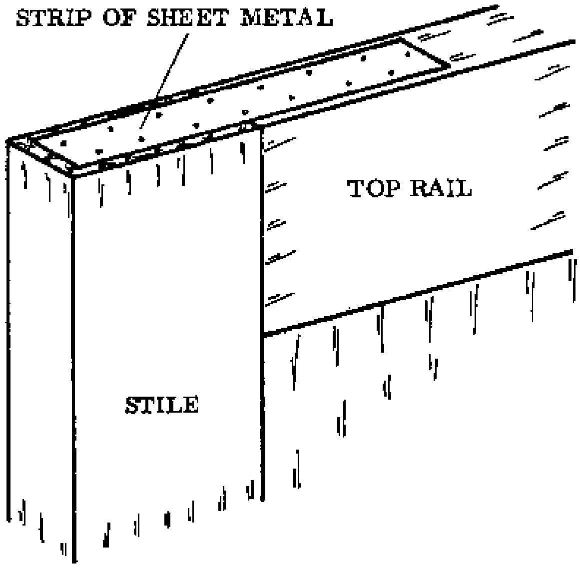

Fig. 2

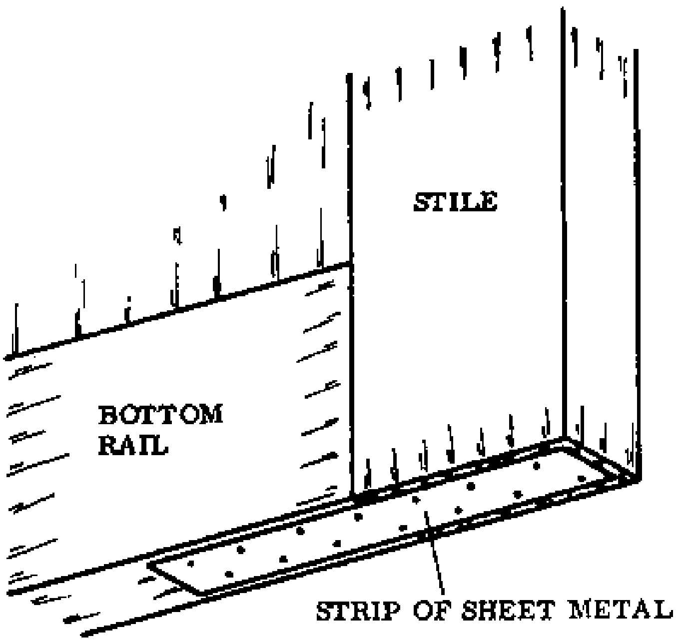

Fig. 2

NOTES:

Flush doors

The flush door with a framed core (Fig. 1) is a type of door that we frequently make in Rural Building. This door consists of a frame which has stiles (a), top and bottom rails (b & c), and narrow intermediate rails (d). It is covered on each side by a sheet of plywood (e). Sometimes flush doors for the outside of the building are covered on one or both sides by sheets of thin metal, usually aluminium or galvanized iron. Plywood-covered flush doors cannot be used where they will be exposed to rain and sun.

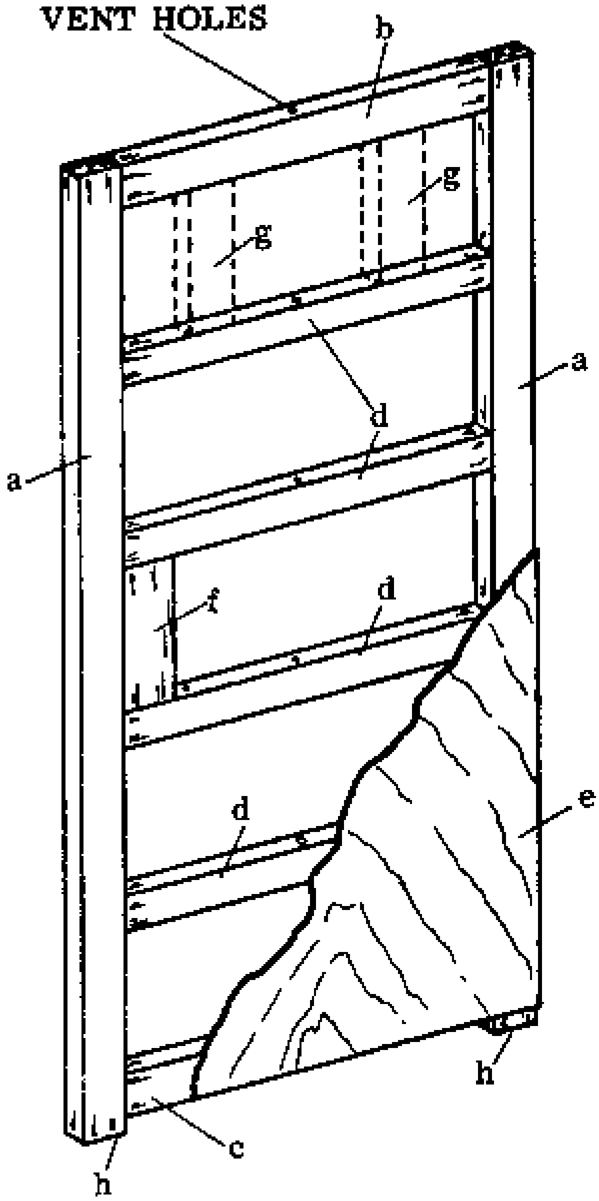

Fig. 1

Well seasoned Wawa is used for the frame. If the stiles are not wide enough to provide room for the mortice lock (Reference Book, page 223), then a lock block (f) is added. This block should be long enough so that does not restrict the lock position to only one spot. The location of the lock block should be indicated on the outside edge of the frame so it can be found later after the plywood or metal sheets are fixed.

When two additional members are placed between the rails (g), a pane of glass can be set in them to provide additional light for the room (Figs. 1 & 2).

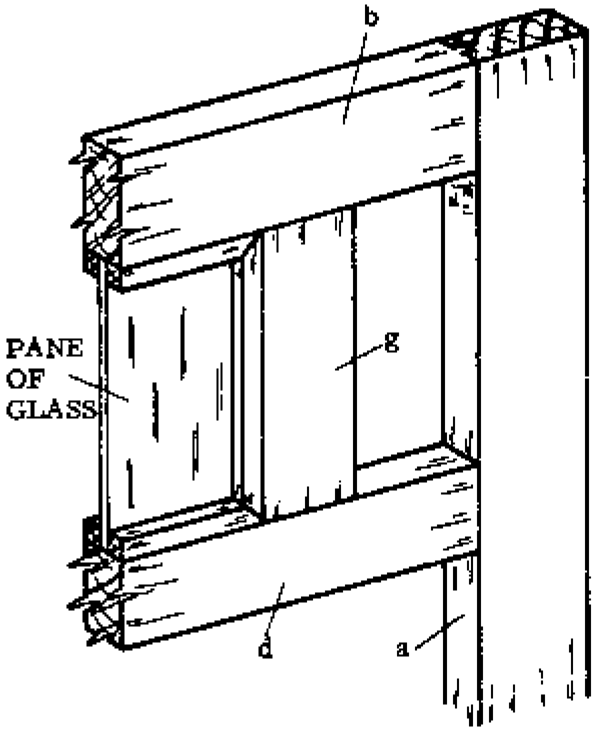

Fig. 2

To prevent damage to the top and bottom rails when the door is stored and moved around, the stiles can be left projecting past the rails (h), thus forming a rest for the door.

Ventholes can be drilled through each of the rails to ensure good air circulation within the frame. Take care that the ventholes in the top and bottom rails are not blocked by paint.

The joints for the flush door can be haunched stub tenons for the top and bottom rails (Fig. 3) and stub tenons for the intermediate rails.

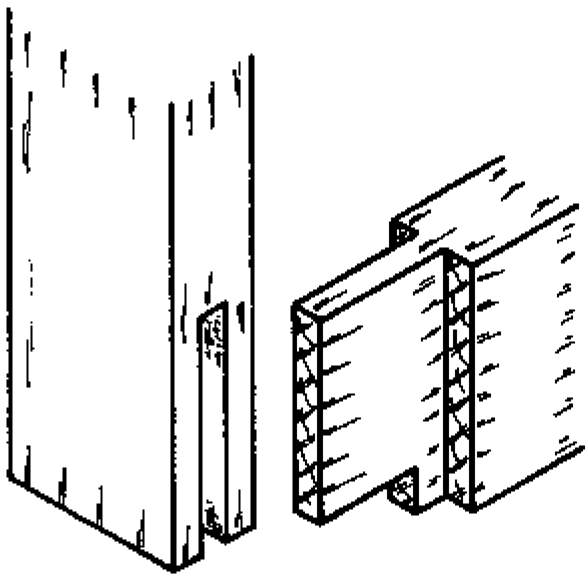

Fig. 3

- LIPPING: A strip of hard wood (Fig. 4) can be fixed to the striking stile to prevent damage to the plywood edges. Lipping is always done after the plywood has been fixed. A thoroughly painted lipping can be added to the top of the door if necessary to keep water out. The lipping joint should be a mitre joint.

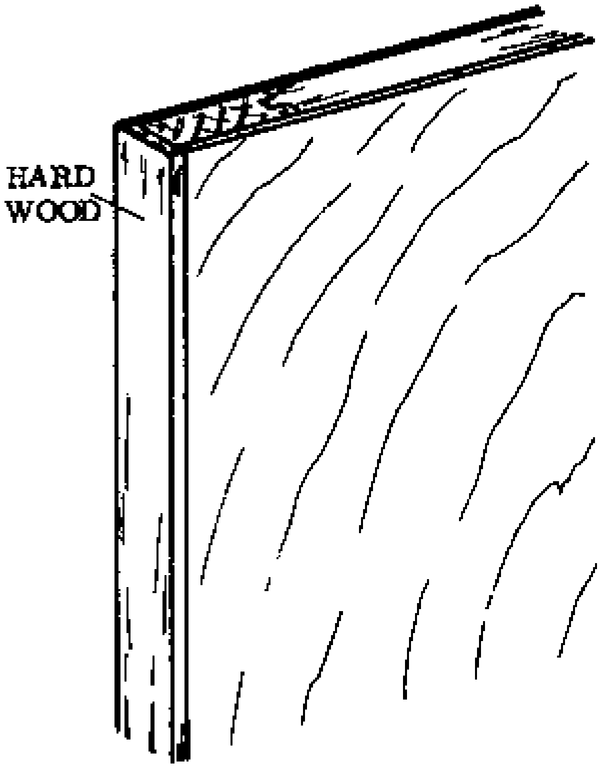

Fig. 4

NOTES:

- SEQUENCE OF OPERATIONS FOR MAKING A FLUSH DOOR: (also see Drawing Book, page 74)

a. Study the drawing.

b. Prepare a cutting list.

c. Select the wood.

d. Cut the wood to the right size. The plywood should be cut slightly larger than the door, so it can be planed to size later.

e. Plane the wood to size, and make the face marks.

f. Mark out the joints.

g. Prepare the joints.

h. Drill the ventholes.

i. Glue and clamp the frame together.

j. Fix the lock block. Indicate the position of the block on the outside edge of the door.

k. Plane the frame so the surfaces are flush.

l. Glue the plywood on both sides of the door and secure it with wire nails to the rails and stiles. If more than one door is being made, the doors can be set on top of one another and weighted down until the glue hardens.

m. Fix the lipping and finish off the door.

- TIMBER MEASUREMENTS FOR FLUSH DOORS:

Top and bottom rails	-	3 to 4 cm thick, 7 cm wide
Stiles	-	3 to 4 cm thick, 7 cm wide
Intermediate rails	-	3 to 4 cm thick, 5 cm wide
Plywood	-	6 mm thick
Distance between rails	-	30 cm

NOTES:

Large doors

Sometimes a large door is needed for a store or a similar building.

Large doors can be constructed like panelled doors. In addition to this framework, braces are used. The braces slope up from the bottom of the hinge side to the top of the opposite side.

The frame can be covered with plywood on the inside, and with either sheet metal (Fig. 1) or horizontally fixed overlapping boards (Fig. 2) on the outside. If corrugated sheet metal is used, the top edge has to be covered to prevent water from entering between the sheet metal and the door frame (Fig. 1, arrow).

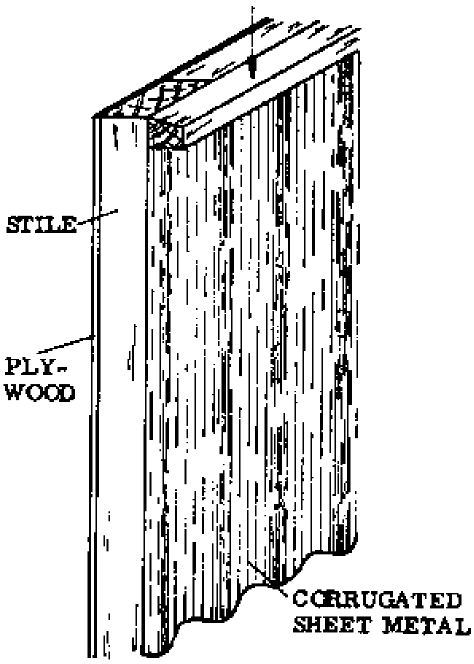

Fig. 1

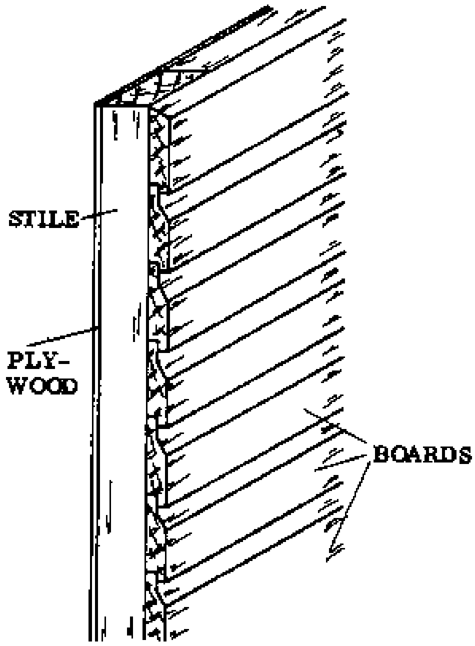

Fig. 2

The frame used for this kind of door should be heavier than the one used for an ordinary panelled door. The timber for the frame should be no less than 5 cm thick.

Each large door should have 3 band-and-hook hinges. If T-hinges are used, the strap has to be long enough to overlap a part of the rails. If the hinges are fixed to the stile only, the door will tend to sag.

In the Reference Book, page 229, there is a description of a simple locking device which can be made for this type of door.

WINDOWS

The function of a window is to let light and air into the building. When closed, the window should be draught-proof, weather-proof and burglar-proof. The size of the window should be appropriate for the room.

In Rural Building, windows consist of a window frame into which louvres or casements are fitted.

Casements are hinged to open to the outside. This makes them easier to waterproof than if they opened to the inside. The hinges should be fixed so that the casement opens flat to the wall. The frame of the window is set flush to the outside surface of the wall (see Installing Window Frames section, page 85).

Sometimes the hinges are fixed at the head of the window frame. This allows the casement to open upwards, thus providing shade for the opening and the wall. Refer to the Drawing Book, page 50, for ways to show the positions of hinges in the drawing.

Types of casements

In Rural Building, we deal with 5 different kinds of casements:

- Ledged and battened casements (Fig. 1)

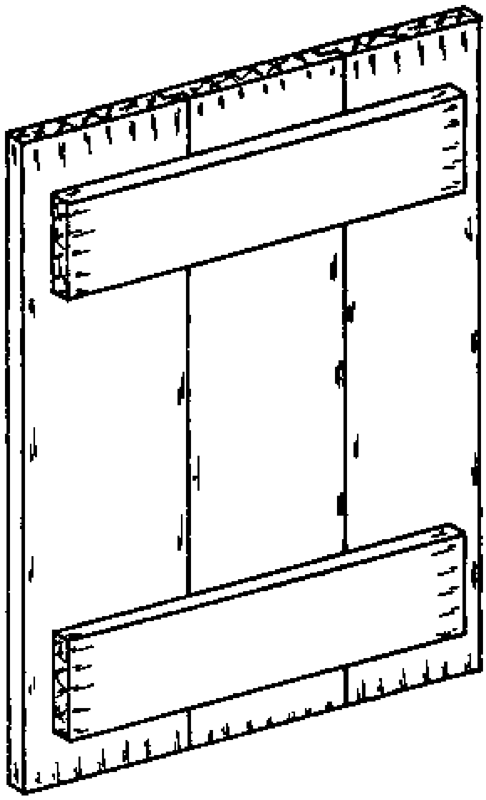

Fig. 1

- Ledged, braced and battened casements (Fig. 2)

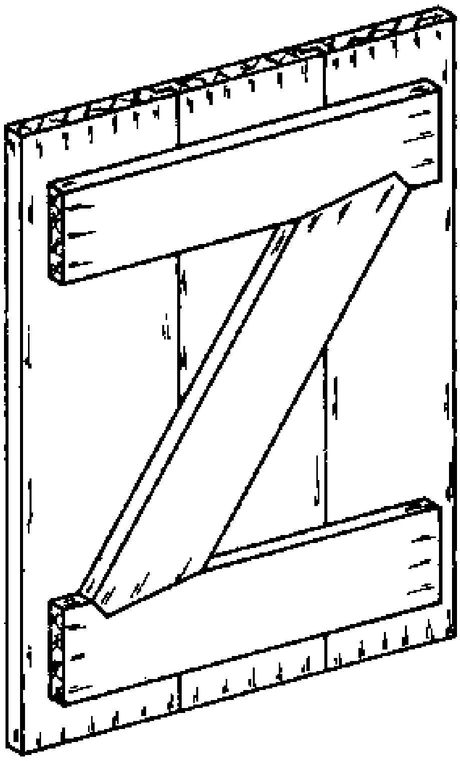

Fig. 2

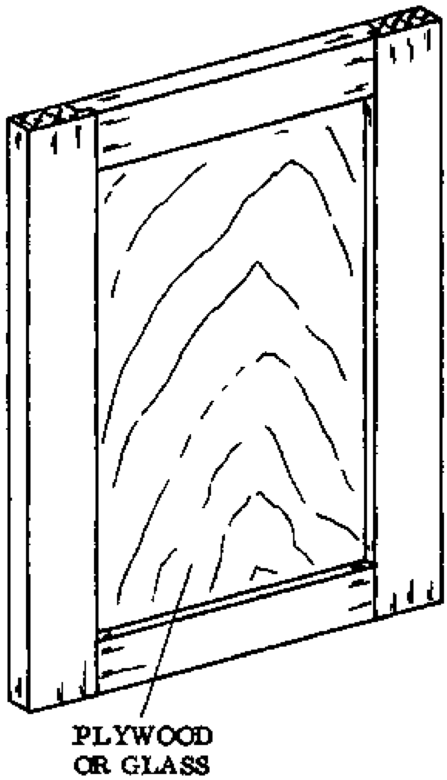

Fig. 3

- Panelled casements (Fig. 3)
- Glazed casements (Fig. 3)
- Flush casements (Fig. 4)

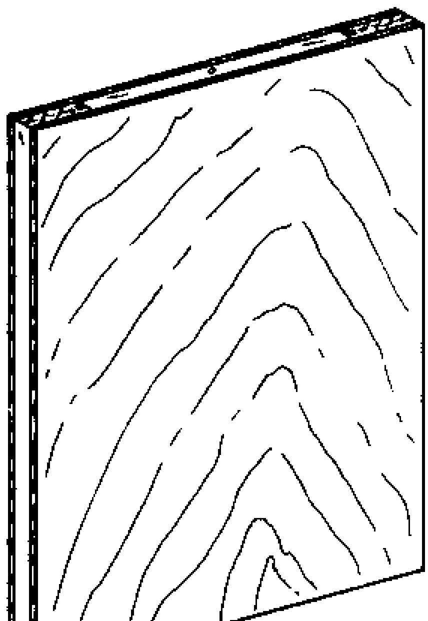

Fig. 4

It is necessary to leave at least 3 mm of play on all sides between the casement and frame (more if the casement is made during the dry season) so that the casement can open freely. This allows for expansion and shrinkage in the frame and casement.

Battened casements

Both types of battened casements are constructed in the same way as the corresponding type of door.

Matchboarding is also done in the same manner as for a door. Depending on the size of the casement, usually only two ledges are needed (Drawing Book, page 73).

Panelled casements

These can be made with grooved-in or rebated frameworks, in the same way as panelled doors (see Doors, page 101).

Usually the panels are made from plywood. Be sure to cut the bottom rail of the casement according to the slope of the cill.

The measurements of the members can be 5 to 7 cm wide and 3 to 4 cm thick.

The overall size of a panelled casement equals the inside measurement of the window frame, minus the allowance of at least 3 mm all around (Drawing Book, page 75).

Glazed casements

These are made with a rebated framework. The construction is the same as for a panelled door or casement (see Panelled Doors, page 101). Instead of a plywood panel, a pane of glass is installed in the framework (Fig. 1).

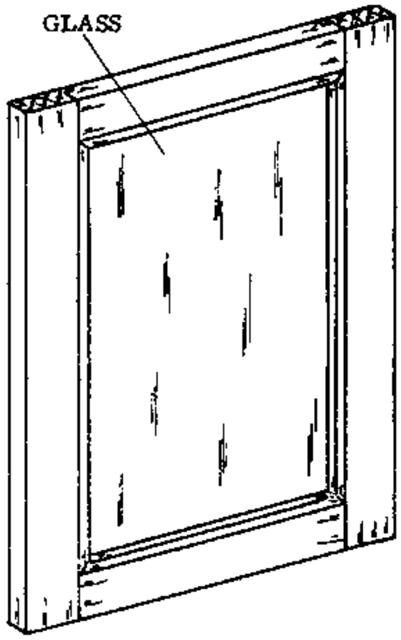

Fig. 1

Select the wood for this casement very carefully. It should be well seasoned and straight grained, so that the frame will not twist and cause the glass to break.

The joints are usually haunched stub tenons. Paint the joints and rebates before assembling the frame. The glass pane is always fitted after the frame has been assembled. The rebated framework is used because it permits the replacement of broken glass.

There are different ways of securing the glass in the rebated framework:

- By using beads, where the casement does not have to be waterproof (Fig. 1a)

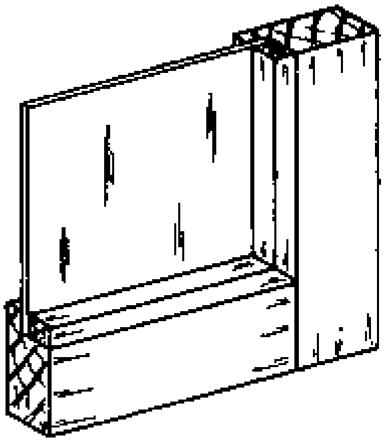

Fig. 1a BEADS

- By using putty, to make a waterproof seal (Fig. 1b)

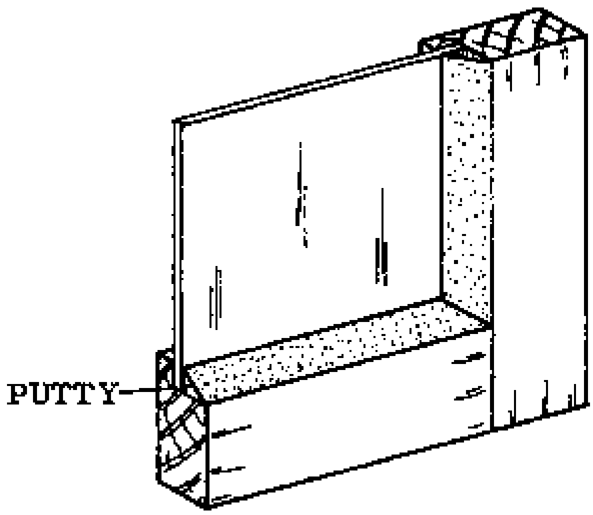

Fig. 1b

- By a combination of a thin layer of putty and beads.

The glass should always be cut 2 mm shorter in the length and the width, to make it easier to fit in the frame.

The sections of the frame members will be: 5 to 7 cm wide and 3 to 4 cm thick.

Flush casements

These are constructed in the same way as flush doors. Flush casements can be covered on one or two sides with plywood or sheet metal (aluminium or galvanized iron).

Flush casements should only be used where they will be protected from the rain and sun, for instance on a verandah.

Plywood should be glued and nailed to both sides of the casement, not one side only, to keep the casement rigid, straight and strong. For outside work, use waterproof glue.

- TIMBER MEASUREMENTS:

Top and bottom rails	-	3 to 4 cm thick, 5 to 6 cm wide
Stiles	-	3 to 4 cm thick, 5 to 6 cm wide
Intermediate rails	-	3 to 4 cm thick, 4 to 5 cm wide
Plywood	-	6 mm thick

The lower part of the bottom rail must be planed to fit the slope of the cill. The distance between the rails is approximately 30 cm (Drawing Book, page 74).

Joints

Note that in the construction of window frames and casements, different methods of framing are used.

For window frames, the horizontal members (heads and cills) have mortices, and the vertical members (posts and mullions) have tenons (Fig. 2, a; previous page).

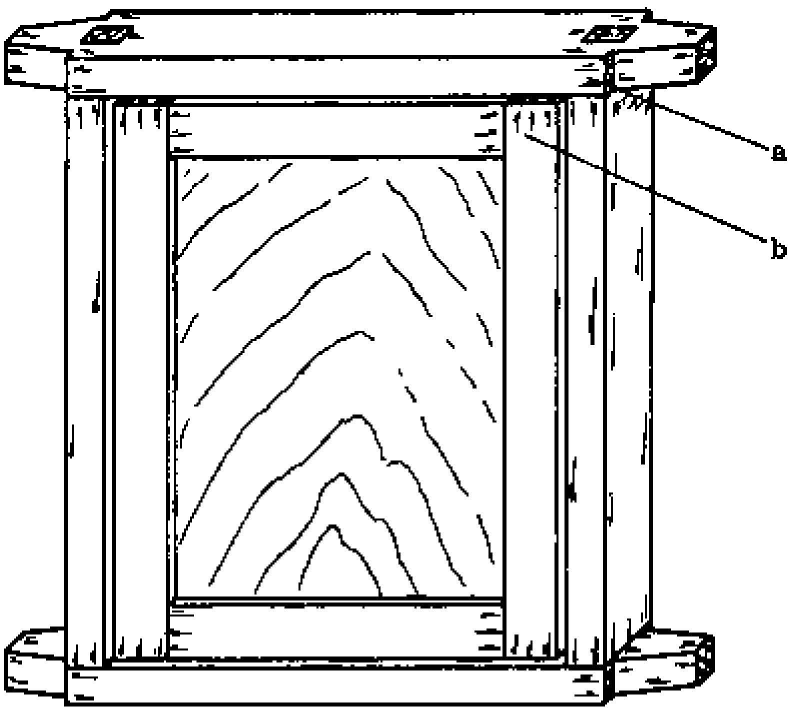

Fig. 2

For the casements, the vertical members (stiles) have mortices and the horizontal members (rails) have tenons (Fig. 2, b; previous page).

The same system applies for door frames and doors.

NOTES:

Louvre windows

- SEQUENCE OF OPERATIONS FOR INSTALLING LOUVRE WINDOWS: (see Reference Book, page 217)

a. If there will be mosquito wire on the window, you will have to be careful to set the louvre channels so that the louvres will be able to open without touching the wire.

b. Mark the position of the channel on the wooden frame, at the side where the operative channel (the one with the handle) will be fixed.

c. Grease the moving parts on the inside of the channel (use grease, not oil).

d. Fix the operative channel with one screw near the top.

e. Plumb this side. Secure the channel firmly with screws (the screw size will be 3 x 30, round head screws).

f. Install the non-operative channel, parallel to the first channel.

g. Secure this side loosely near the top, leaving the bottom free so it can be adjusted later.

h. Put in the louvre glasses, starting from the top and working down. Close the clip ends to secure the glasses in place.

i. When all the glasses are installed, close the louvres.

j. Move the bottom of the non-operative channel until the louvres fit tightly together and are parallel.

k. Now secure this side firmly with screws.

l. Check the installation (screws, clip ends, etc.) and operate the handle several times to make sure that the louvres move freely.

m. Fix the waterbar (either a wooden bead or a ready-made aluminium bar) at the head (outside the glass) and the cill (inside the glass), so that it is just touching the glass when the louvres are locked.

NOTES:

- SEQUENCE OF OPERATIONS FOR INSTALLING A SELF-MULLIONING LOUVRE WINDOW: If two or more louvres are to be set across the window frame, the metal channels can be fixed together with screws, to form a metal mullion. The metal mullion is installed before the other channels.

a. Mark the centres of the head and cill. The width of the window frame has to correspond to twice the length of a louvre glass, plus 3,8 cm for each set of channels, making 7,6 cm for both sets.

b. Mark out the position of the metal mullion on the head and cill. Keep in mind the position of the mosquito wire (Fig. 1).

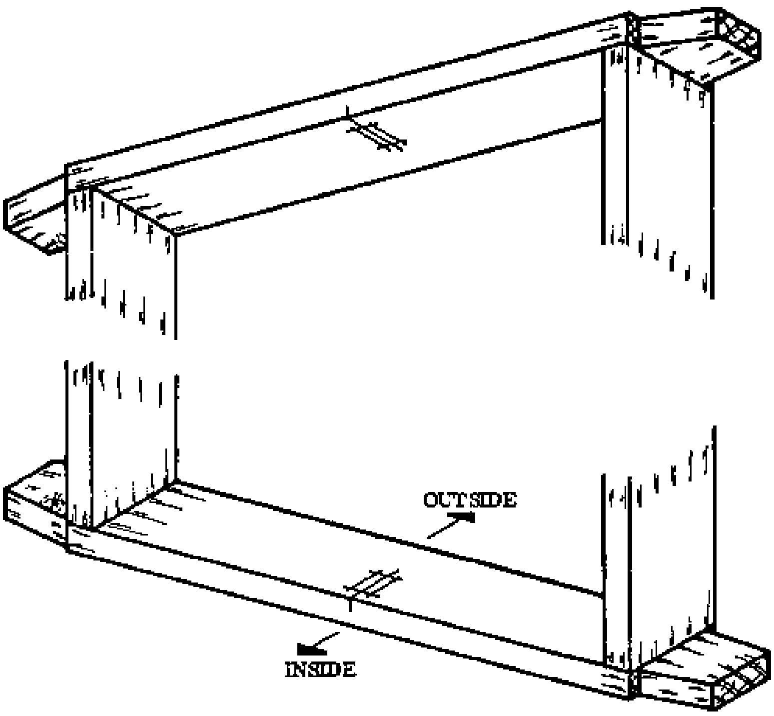

Fig. 1

c. Fix the bottom spacer on the cill (Fig. 2) at right angles to the face of the frame. The frame must be painted before the spacers are fitted.

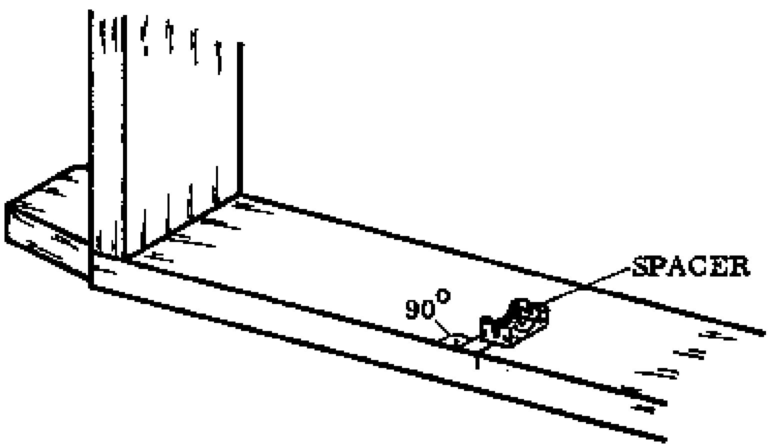

Fig. 2

d. If the cill is sloping, bend the lugs of the spacer so that they are upright. The bottom end of the louvre channel should be cut to fit the slope of the cill, so that it fits tightly (Fig. 3).

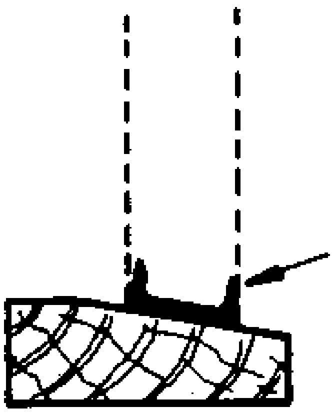

Fig. 3

e. To position the top spacer, place a louvre channel against the bottom spacer and plumb it with a spirit level. When it is straight, fix the top spacer exactly above the bottom spacer.

f. Take the non-operative channel and fit spacers into it at the places indicated by holes; these serve to stiffen the mullion.

g. Attach the non-operative channel to the spacers at the head and cill of the frame (Fig. 4).

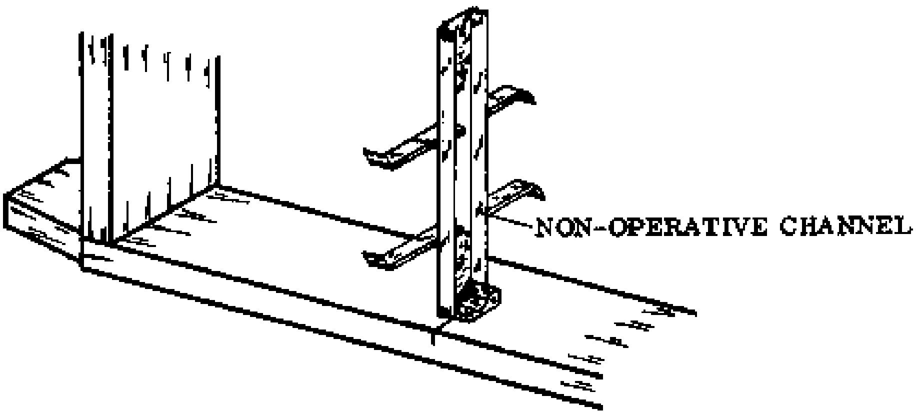

Fig. 4

h. Attach the operative channel to the non-operative channel with the special bolts and nuts.

i. Check the installation and operate the handle several times.

j. Install the other louvre channels to the window frame as in the previous page on installing louvre windows.

k. Make sure that all the channels are the same distance from the inside face of the window.

NOTES:

WORKING SCAFFOLDS

These are scaffolds which the workers stand upon to reach the higher parts of the construction. The tools and a supply of materials are also on the platform with the worker.

Jack scaffold

Although it can be no more than 2 m high, the jack scaffold is a satisfactory working scaffold for most jobs in Rural Building (Fig. 1). The block and trestle scaffolds which may be used for low level work are described in Basic Knowledge, page 158.

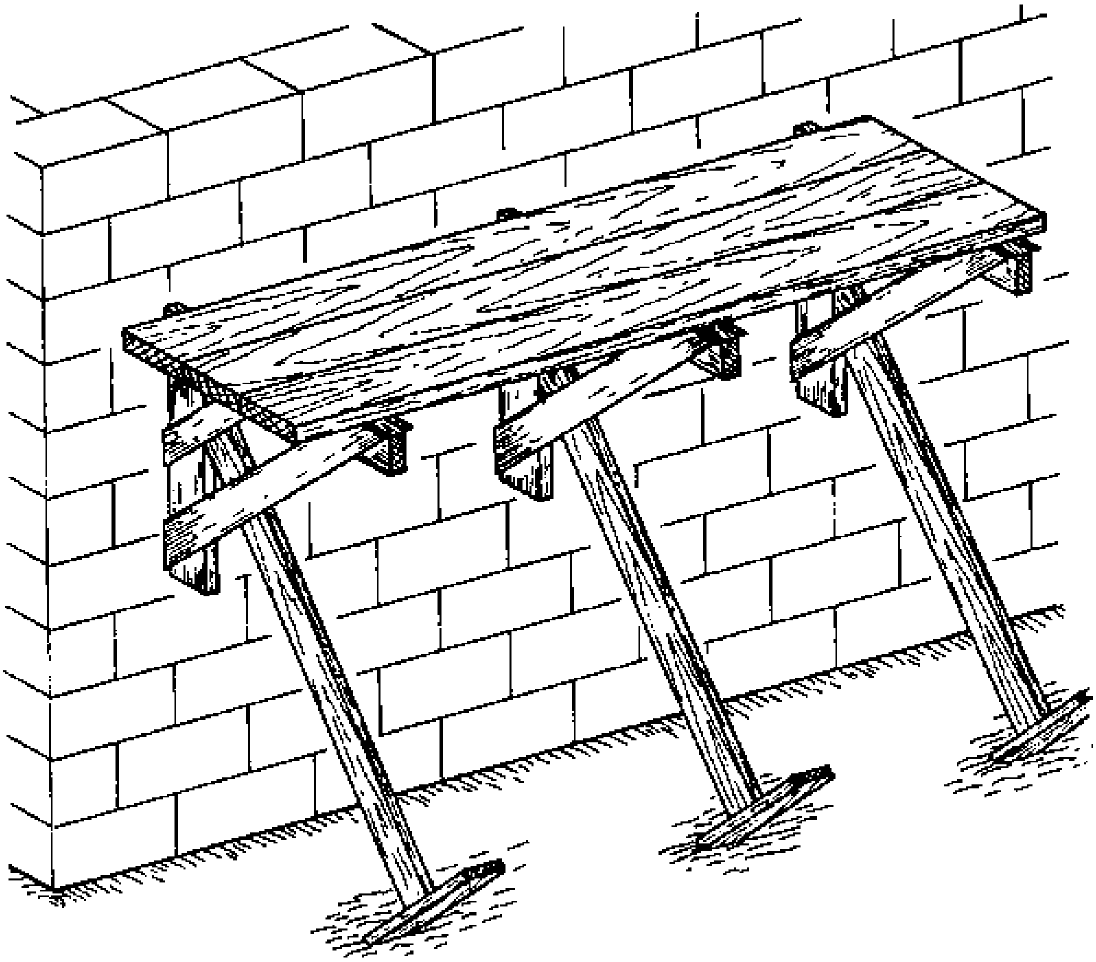

Fig. 1

The jack scaffold is a dependent scaffold, which means it is propped against the wall for support instead of standing independently like other scaffolds. The feet of the props have to be properly set in place so that they will not move and settle when the scaffold is in use. Never try to put any support under the wall leg of the jack, as this would actually make the scaffold unstable.

Each jack scaffold consists of three jacks, three props and three (approximately 4,5 m long) planks. If the scaffold is to be only 2 m long or less, two jacks are enough.

- CONSTRUCTING THE SCAFFOLD PIECES: The jacks consist of a wall leg and a ledge which is nailed edgewise to the top of the wall leg. Both boards must be at least 5 cm thick by

10 cm wide, and about 100 cm long. The right angle is braced with two ties on each side, in a way similar to the construction of a large square (Fig. 2, also see Reference Book, page 13).

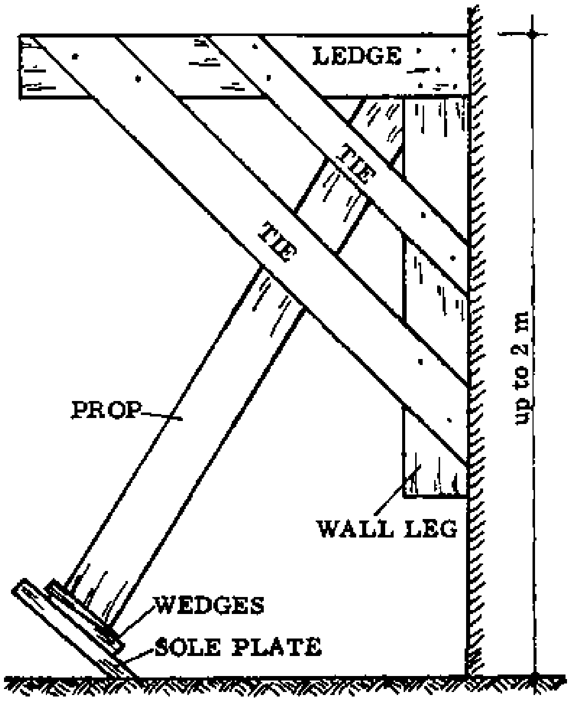

Fig. 2

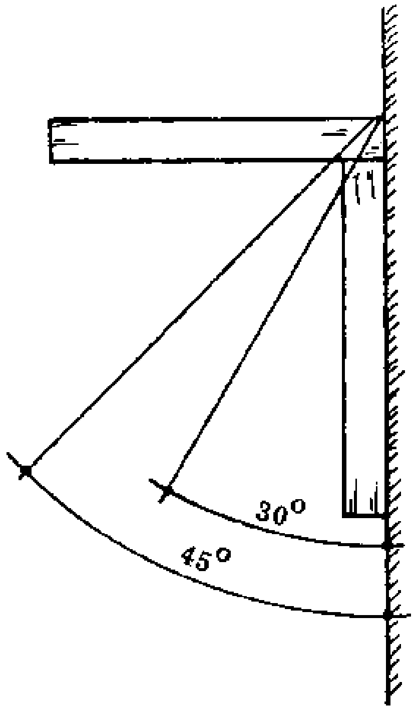

Fig. 3

The shorter tie should be set so that it doss not cover the corner of the jack, where the prop meets the angle. An opening is left, through which the position of the prop can be checked. The prop has to fit securely into the corner of the jack, without any "play" in the connection. The ties should be at least 2,5 cm thick, and the prop will be 5 by 10 cm by whatever length is required (remember that this scaffold should not be more than 2 m in height).

- ERECTING THE SCAFFOLD: Hold the jack with its wall leg against the wall, and fit the prop into the corner of the jack. Set the foot of the prop securely in the ground. The other jacks are set up in the same way. Check that all three are at the same height and the distance between them is not more than 2 m. The angle between the prop and the wall should be no less than 30 degrees and no more than 45 degrees (Fig. 3). In soft soil, sole plates must be set under the feet of the props.

- SAFETY PRECAUTIONS:

- Check that all the members of the scaffold are sound and without cracks.

- Check whether the upper ends of the props fit well and without play into the corners of the jacks

- Make sure that the feet of the props will not slip. In soft soil, they should be supported by sole plates set in the ground, at right angles to the props (Fig. 1).

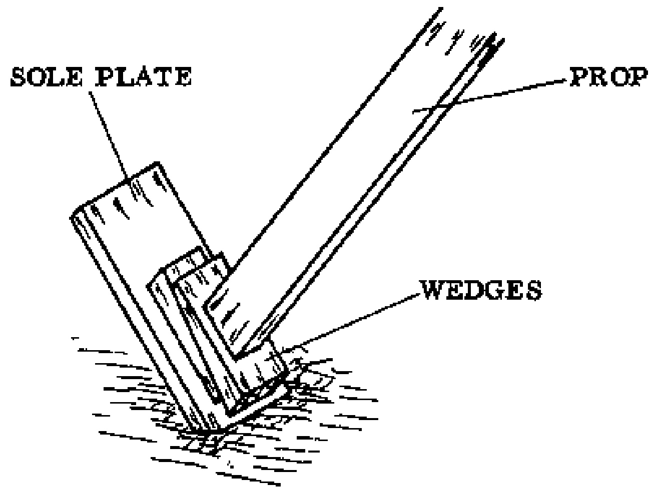

Fig. 1

- Pay attention when you lay the platform boards, so you don't create a scaffold trap. This is a place which looks safe but is not (Figs. 2 & 3). The free ends of the platform must not project by more than 25 cm past the ledge, and they should be blocked off by a foot-stop (Fig. 4).

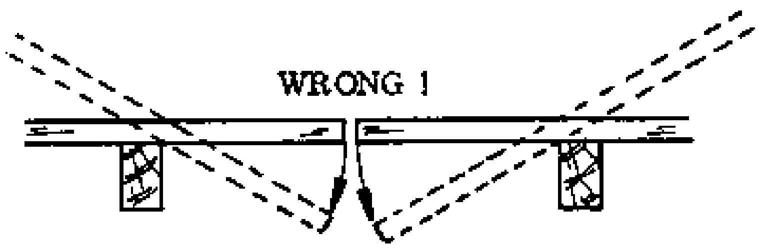

Fig. 2

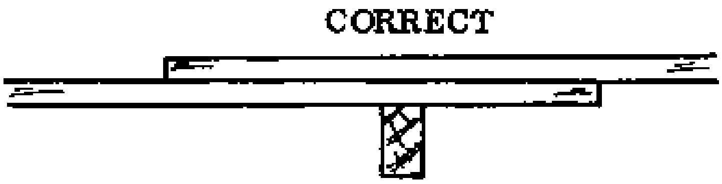

Fig. 3

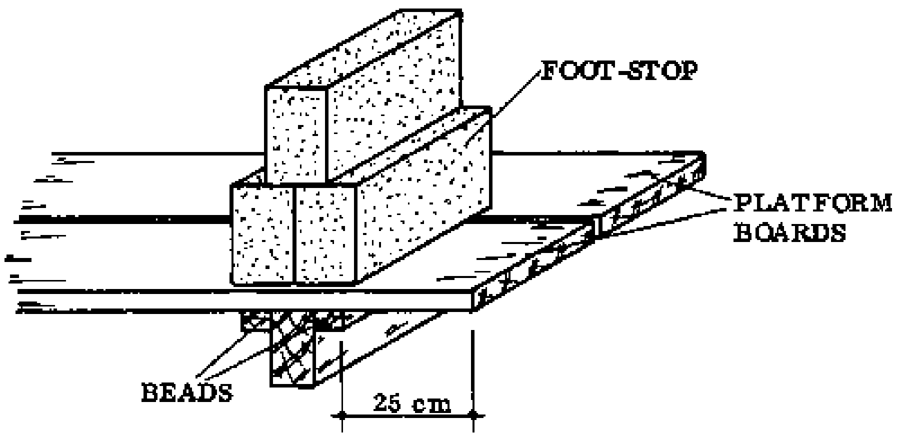

Fig. 4

- Wedges are used between the foot of the prop and the sole plate. By adjusting these, the prop can be tightened against the angle.

- Beads can be attached to the bottom of the platform boards to prevent them from shifting along the ledges (Fig. 4), or the platform boards can be nailed directly to the ledges.

- NOTE: Always pay attention to the safety of the scaffold. A carelessly erected scaffold is a danger to the lives of workers and passers-by.

NOTES:

Blocklayers scaffold

Like the jack scaffold, this scaffold is dependent on the wall for support. The construction is fixed with “putlogs” into the wall, and secured on both sides of the wall with cleats which are nailed to the putlog (Fig. 1).

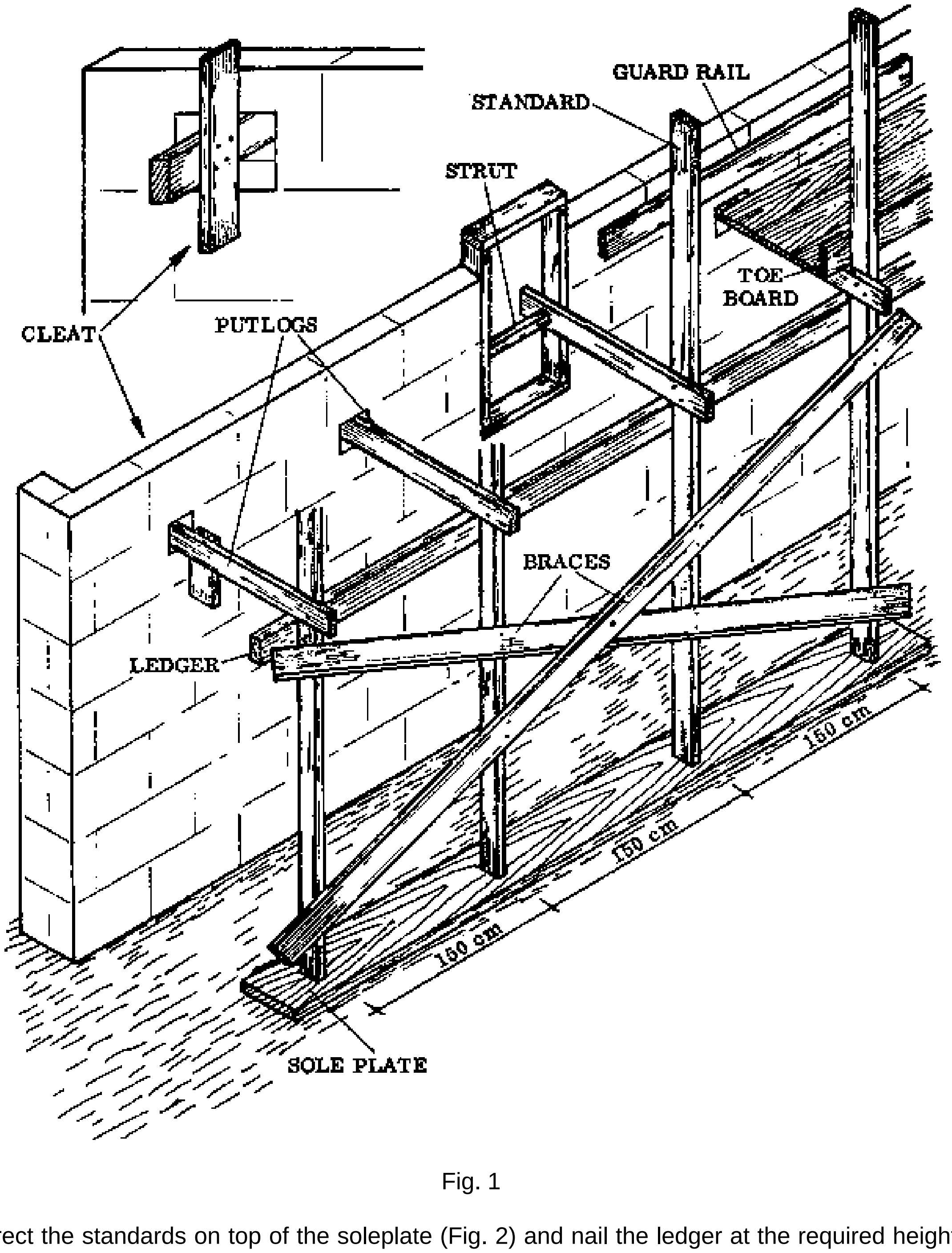

Fig. 1

Erect the standards on top of the soleplate (Fig. 2) and nail the ledger at the required height. Each putlog will have one end in a wall opening which was left during the blocklaying; and the other end is supported by the ledger and nailed to the standard. Secure the putlogs into the wall with two cleats, one on either side of the wall. Make sure that the cleat on the outside of the wall does not project above the putlog, where it will interfere with the platform boards.

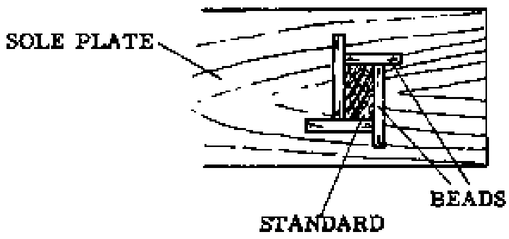

Fig. 2

Once all the putlogs have been secured, nail braces across all the standards to make the whole construction rigid.

Check the construction, then lay the platform boards. Fix the toe board, and nail the guard rail at a height of 90 cm above the platform.

If a putlog is secured inside of a window frame, add an additional strut inside the frame (Fig. 1).

The advantage of this type of scaffold is that it requires less wood to make the frame. The holes left in the wall are easily filled with small blocks before the plastering is done.

- MEMBERS OF THE SCAFFOLD: (see Fig. 1)

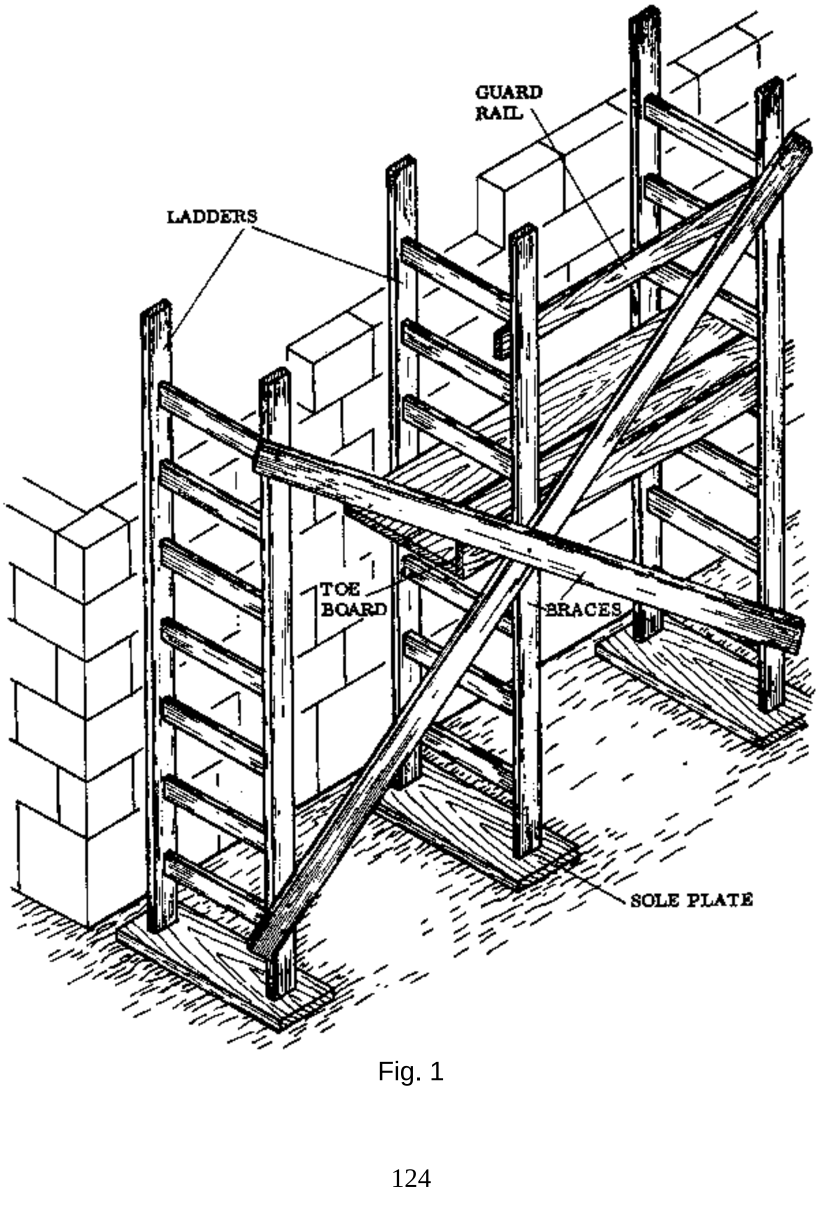

Fig. 1

- Sole plate
- Standards
- Putlogs
- Cleats
- Ledger
- Braces
- Platform boards
- Toe board
- Guard rail
- Struts (if needed)
- Pieces to secure the standards to the sole plate (Beads)

NOTES:

Ladder scaffold

This is an independent working scaffold, that is, it is not supported on the building but stands free. A ladder scaffold can be used where the height of the building is no more than 3,5 m.

Three or four ladders are usually used. Erect the ladders on top of the sole plates so that they do not sink into the ground under use. Keep the ladders plumb and straight, and nail two braces diagonally across the side.

If necessary use some wedges under the ladders to keep the structure steady.

Lay the platform boards and fix the toe board and the guard rail. The guard rail is fixed 90 cm above the platform.

Before any workers use the newly erected scaffold, make sure that all the parts are well secured and fixed according to the safest manner. Be aware that the scaffold has to carry not only the workmen but also a load of building materials.

NOTES:

Independent scaffold

This is similar to a ladder scaffold with the difference that no ladders are used. Timbers are used instead; these should be 5 x 10 cm by approximately 4,5 m long.

Sort out the timber, keeping the straight pieces for standards and the bent pieces for shorter members like putlogs.

Mark the height of the working platform on the standards, and nail the putlogs to the standards. Erect the standards on top of the sole plates, and nail the necessary braces to the outside of the structure.

Nail two additional boards (ledgers) under the putlogs. These give support to the putlogs.

Lay the platform boards and secure them with nails or battens. Fix the toe board. Nail the guard rail 90 cm above the platform.

If necessary, place some wedges under the standards to make sure that the whole structure is steady. Extra braces can be added to the outside of the structure; secure them to the ground with pegs (Fig. 1, broken lines).

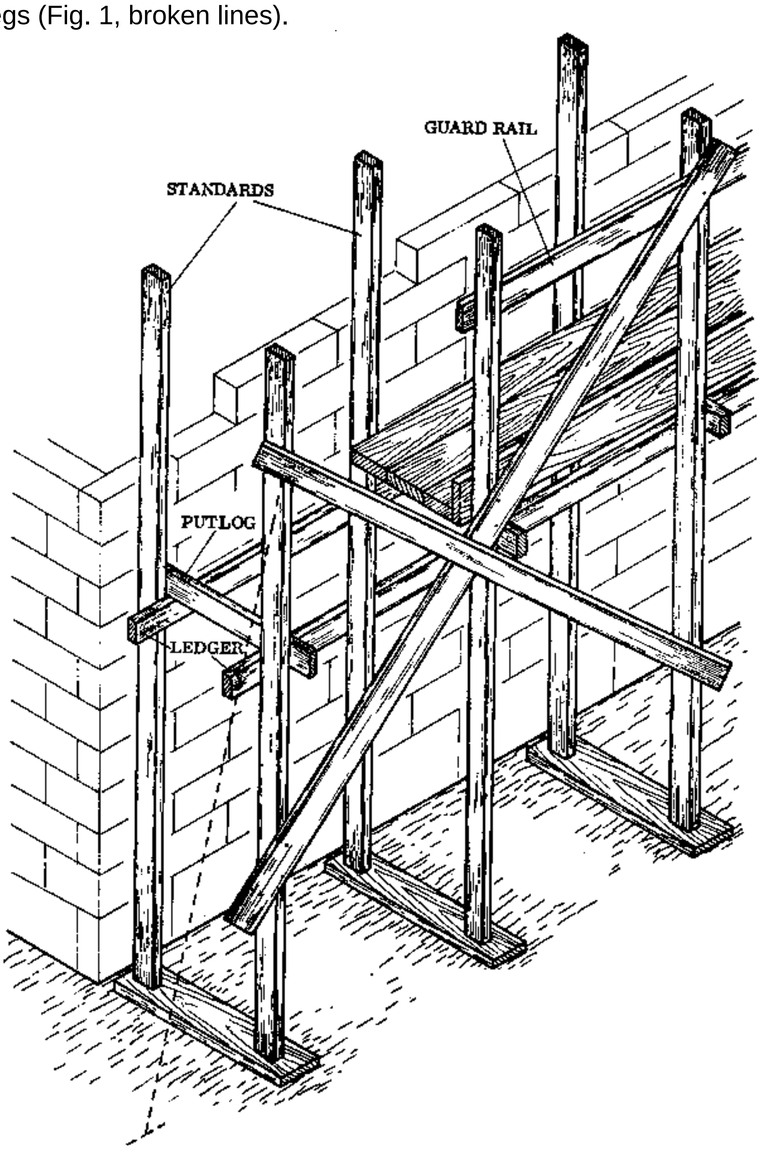

Fig. 1

Fig. 2 shows an alternative way to support the putlogs, with a wedge-shaped piece of wood nailed to the standard underneath the putlog.

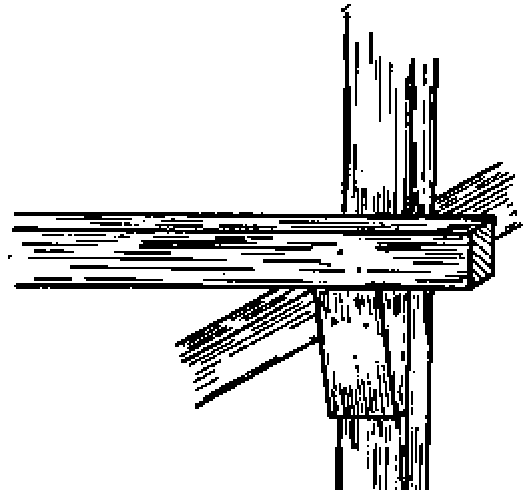

Fig. 2

SUPPORTING SCAFFOLD

As the term indicates, a supporting scaffold is used to support members of the structure until the mortar or concrete has hardened or cured; or until the parts are assembled, when the member will be able to support itself and the scaffold can be taken away.

The supporting scaffold is seldom used in Rural Building because in most cases a lighter and simpler strutting will serve for the purpose of supporting the usual reinforced concrete members as they are cast-in-situ. See page 167 of the Basic Knowledge book for an illustration of a typical strutting for a reinforced concrete lintel.

The heavier supporting scaffold is used only in cases where the member to be supported is very large and heavy. The supporting scaffold arrangement is shown in the illustration on the next page.

When you construct a supporting scaffold, pay particular attention to the stability of the structure, since it usually has to support very large and heavy members. The distance between the standards (also called struts) must be no more than 1 m (Figs. 1 & 2). All the shorter braces, which reinforce the connections between the putlogs and the standards and between the standards themselves, are fixed at 45 degree angles. The long braces, which go from the top of the structure down to pegs in the ground, are fixed at an angle of no less than 30 degrees. These help to keep the scaffold from tilting or overturning.

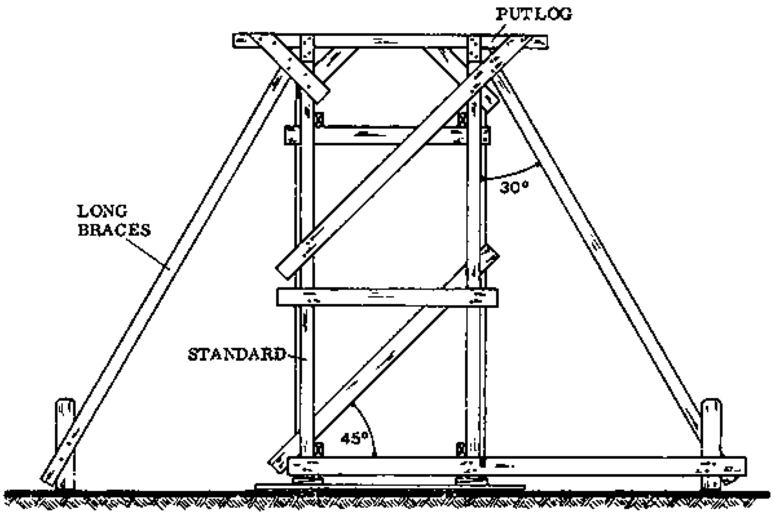

Fig. 1 SIDE VIEW

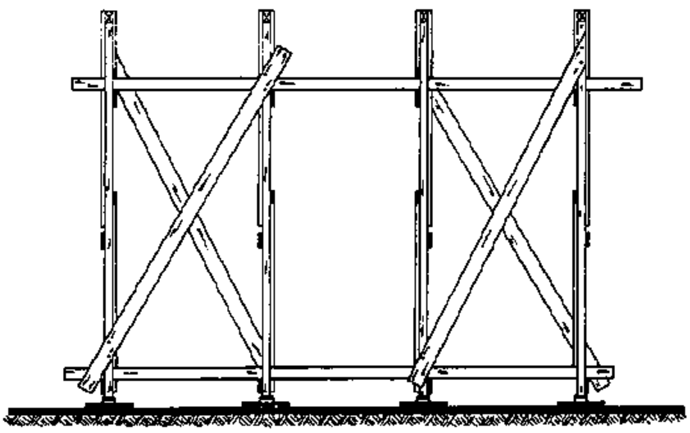

Fig. 2 FRONT VIEW

PROTECTIVE SCAFFOLDING

On most Rural Building construction sites, protective scaffolding is not necessary. This is because the structures are relatively low in height. However, when a higher structure such as a water tower is constructed, protective scaffolding becomes necessary to protect the people underneath from falling objects. On jobs where walls are being broken down, or where large and heavy objects are handled, it is advisable to erect a protective scaffold of some sort.

A second platform is made below the working platform, and a side projection is fixed at an angle to this (Fig. 3).

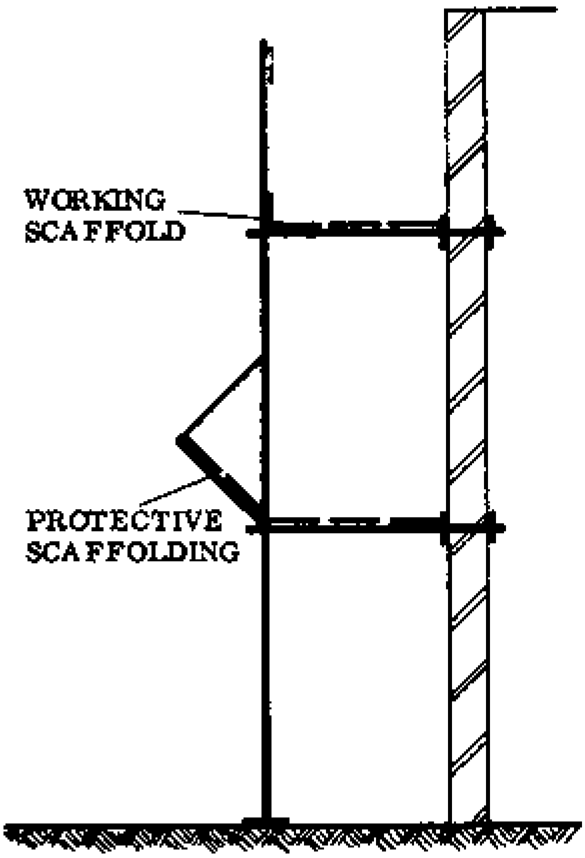

Fig. 3

The projecting piece is attached to the standards by wooden braces.

Any tools or materials which fall from the working platform will hit the projecting piece and roll onto the second platform, instead of falling to the ground.

NOTES:

ARCHES

Openings in walls such as doors and windows have to be closed at the top in such a way that the structure above them is supported. Before the use of reinforced concrete became common, smaller openings were bridged with wooden lintels, solid stone lintels and arches (see Basic Knowledge book, pages 162 to 164).

Wider openings were generally spanned by arches, or by a series of arches carried on piers or columns: the so-called arcade. In this book we discuss only one type of arch, the "segmental arch" where the arch is formed like a segment of a circle. Many other forms are possible with arches, but they are not important for Rural Building.

Before we continue with this chapter, it is essential to understand the technical terms that are used in connection with arches. The terms below are indicated in Fig. 1.

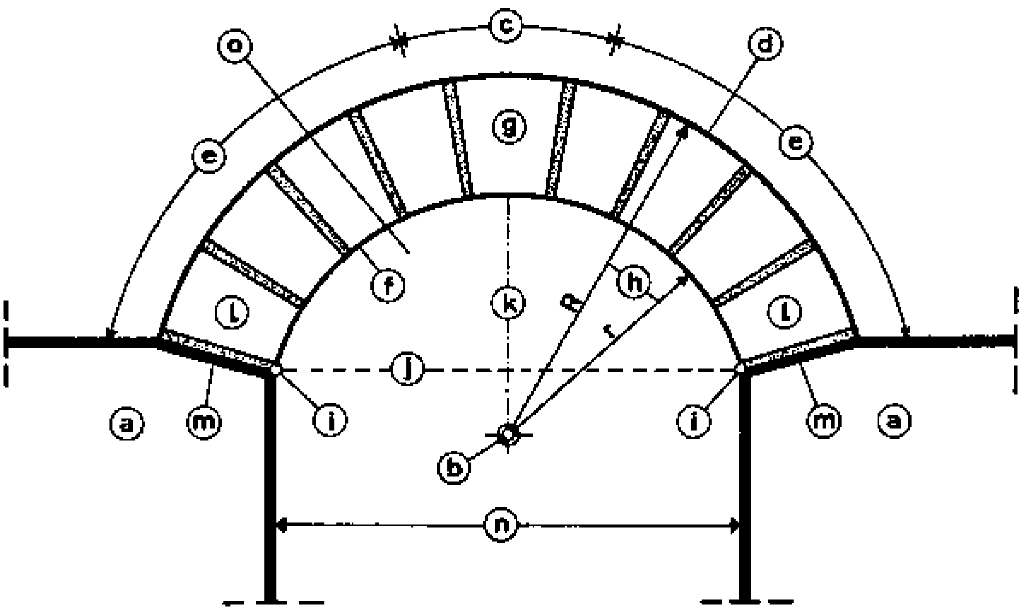

Fig. 1

Technical terms

- ABUTMENT: The word "abut" means to meet at one end or to border on something. An abutment (Fig. 1, a) is that portion of solid masonry that carries the weight of the structure of an arch. In Rural Building, the minimum width of an abutment at the end of a wall should be 3/4 of the span of the arch. This means that the distance from the arch to the end of the wall should be at least 3/4 of the span of the arch.

- CENTRE: This is the midpoint of the circle which describes the curve of the arch (b).

- CROWN: This is the portion of the arch which forms the top of the curve (c).

- EXTRADOS: The outer curved line of an arch, or the upper surface of the archstones (d).

- HAUNCH: The flanks of an arch, the sides of the curve (e).

- INTRADOS: The under surface or soffit of an arch (f).

- KEYSTONE: The central wedge-shaped archstone at the crown of an arch (g), which is the last stone to be put in place.

- RADIUS: The straight line (h) from the centre of an arch to any point on its intrados (the shorter radius, r); or to any point on its extrados (the longer radius, R).

- SPRINGING POINT: The point of intersection (i) between the intrados and the faces of the wall or pier blocks below. From there the arch “springs”.

- SPRINGING LINE: The line across the arch which would connect the springing points (j).

- RISE: The height of an arch measured perpendicularly from the springing line to the highest point of the intrados (k).

- SPRINGER: The first stone laid in an arch on either side (1).

- SKEWBACK: That portion of the abutment which directly supports the springers (m). It is so called because the surface slopes towards the opening.

- SPAN: The horizontal distance between the springing points (n); the length of the springing line.

- CAMBER: This is the space between the springing line and the intrados (o).

- ARCHSTONES: These are any of the stones or blocks which form the arch itself.

NOTES:

Stability of arches

All arches, regardless of their shape or dimensions, function as wedges. An arch distributes the load imposed on it to the abutments on both sides; these have to be strong enough to withstand the pressures (Fig. 1, a). This is the reason why the abutment which is at the corner or end of a wall must be at least as wide as 3/4 of the span of the arch (Fig. 1, b). Between two arches, thinner supports such as columns or piers can be used (Fig. 1, c).

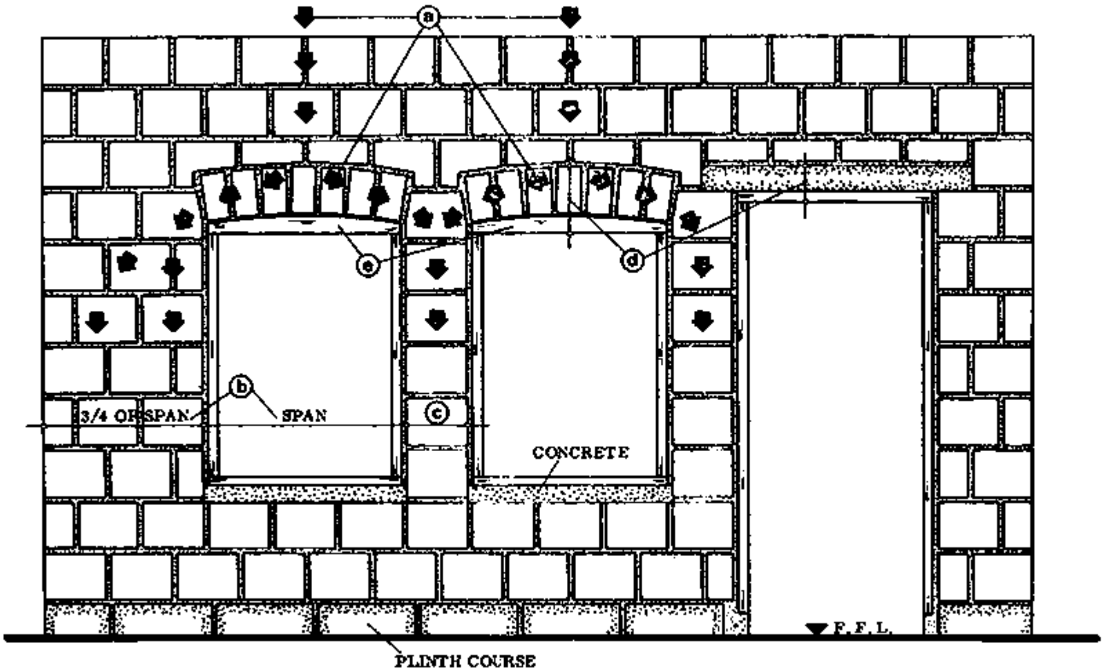

Fig. 1

It is always better to build two or three courses of blocks above an arch because this weight will improve its stability. The preferred material for constructing an arch is sandcrete blocks, because they can be cast to any shape required and can withstand high pressures. Of course landcrete or mud blocks can also be used, but these must be well protected against moisture penetration.

- DISADVANTAGES OF ARCHES:

  - All arches, especially those which have unusual shapes, require more space than a lintel (Fig. 1, d).

  - Frames must be shaped on their top according to the curve of the intrados (Fig. 1, e); or if a square frame is to be fitted, the remaining space above it must be closed with plywood etc.

  - A temporary wooden support, the centring or turning piece, is needed during the construction; this piece has to be exactly the correct shape.

  - Masonry arches cannot be prefabricated.

  - Specially made archstones are often required.

- ADVANTAGES:

  - Arches are more economical because scarce and expensive building materials like reinforcement iron are not needed.

  - Locally available building materials such as mud blocks can be used to build arches.

  - In contrast to cast-in-situ lintels, the walling above an arch can continue immediately after it is completed, because the arch does not have to set.

  - Traditional building styles can be maintained and developed in a simple and cheap way.

- Arches, if well constructed, give the building a more attractive appearance and demonstrate the skill of the builder.

The segmental arch

The segmental arch is the most important one in Rural Building. This is mainly because:

- The construction depth measured from the springing line to the crown is comparatively small; with the result that the building costs are low.

- The construction is not too difficult and specially made tapered blocks are not necessarily required.

- The time spent on the construction of this kind of arch can be shorter than the time spent for constructing a reinforced concrete lintel.

Types of centring

“Centring” is the term generally applied for the curved wooden piece which temporarily supports arches or domes during their construction. It is comparable to the strutting (not the shuttering) for concrete members.

The actual shaping part of the centring is called the “turning piece”. There are three main types of centring:

- A solid wooden board, about 5 cm by 7,5 cm, placed edgewise. Its upper surface is carefully and evenly shaped according to the curve of the intrados (Fig. 1). Its use is restricted to short-span openings; not exceeding about 100 cm wide. The disadvantage of this type is that the archstones rest on only a small area, which might lead to the blocks tilting during the laying.

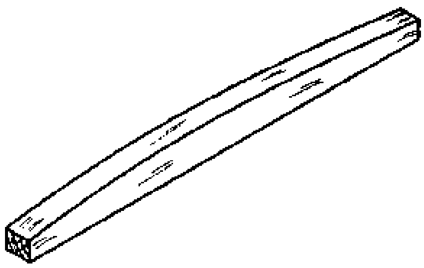

Fig. 1

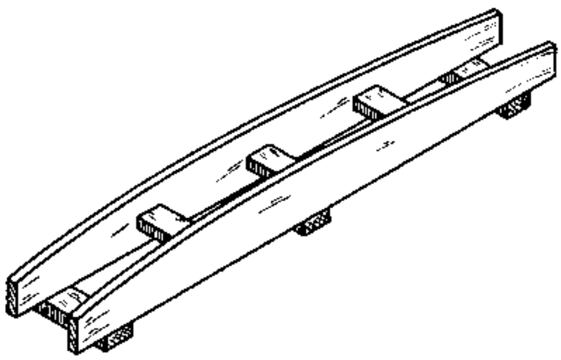

Fig. 2

- Two wooden planks or sheets of plywood are connected by spacers, so that the archstones are supported on their outer edges (Fig. 2). Both turning pieces must be precisely cut and planed to the same shape, and must match with the curve of the intrados.

- Arches spanning wider openings and those which have a rise of more than about 1/10th of the span need to be supported by a stronger centring, with either open or closed lagging (Fig. 3).

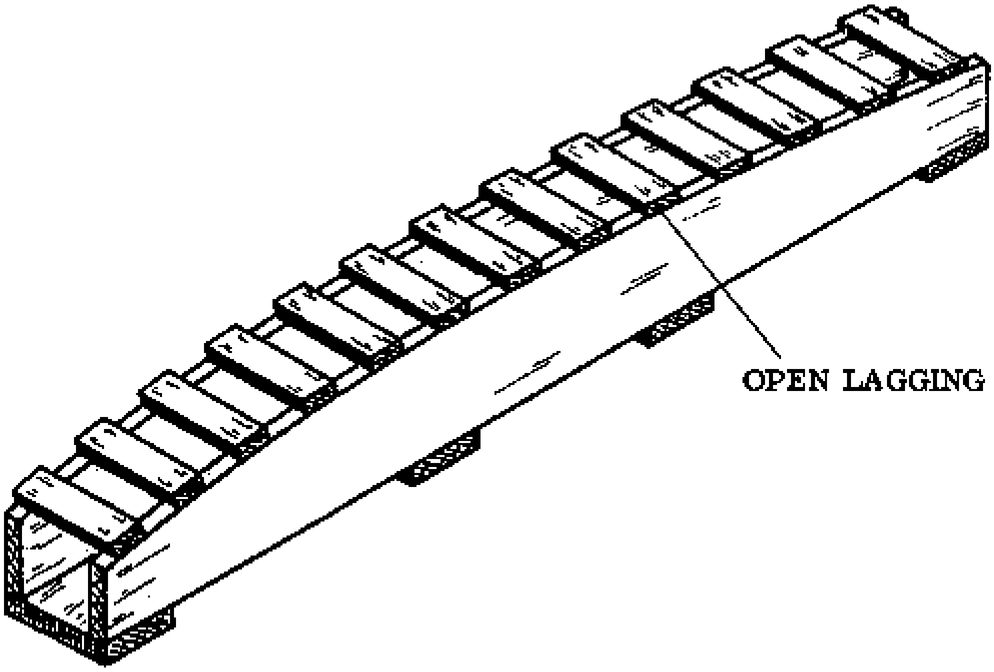

Fig. 3

The three types of centring may be combined with the frame or may form part of the frame; the head. In this case no strutting is needed, and the centring piece simultaneously acts as a permanent seal of the space between the springing line and the intrados (Fig. 4). The lagging must then be fixed in between the turning pieces so it is flush with the upper curved edge and is not seen (Fig. 4).

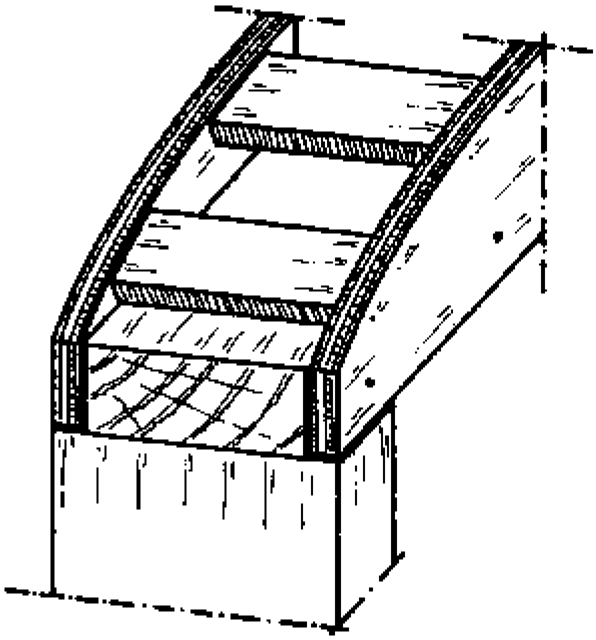

Fig. 4

Setting out the turning piece

To set out the turning piece means to mark the curve of the intrados on a suitable piece of board or plywood, so that after it is cut and planed it can serve as a temporary support and guide for the arch construction. The positions of the archstones are also marked on the turning piece so that no mistakes can be made during laying.

As far as Rural Building is concerned, the radius of the circle which describes the curve of the intrados will always be three times the span of the opening. For example: if the span of the opening is 80 cm (the clear width), the radius must be 3 x 80 cm = 240 cm; if the span is 180 cm, the radius is 540 cm, etc.

The curve obtained from this rule will result in an arch which is flat enough so that not much space is wasted, but also curved enough to ensure stability.

- SEQUENCE OF OPERATIONS:

- You need a large, flat and level space for the setting out.

- Mark the span of the opening on a suitable board (Fig. 1, a).

- Determine the springing points (at least 2 cm from the edge of the board) and drive in short nails to mark these points. Leave the nails projecting, and make sure that they are both the same distance from the edge of the board (Fig. 1, A & B).

- Place the board on the ground and secure it with nails or pegs as shown, so that it cannot shift to any side.

- Fix your mason line on nail A, and measure off from there three times the span of the opening along the line. Use this length to describe a short section of a circle on the ground (Fig. 1, b).

- Repeat this procedure with the line fixed on nail B (Fig. 1, c). Both circle sections will intersect at point C, which is the centre of the arch. Secure the centre point with a nail or peg.

- Fasten the mason line on peg C and tie a pencil at the distance of three times the span of the opening.

- Keep the line taut and describe a circle section, while marking the section on the board. This curved line should intersect with the springing points, A and B, and the curve resembles the curve of the intrados.

- To check the accuracy of the setting out, measure the rise of the arch perpendicularly from the springing line to the highest point of the curve. This distance must be 4,2% of the span (0,042 x span (in cm) equals the rise (in cm).

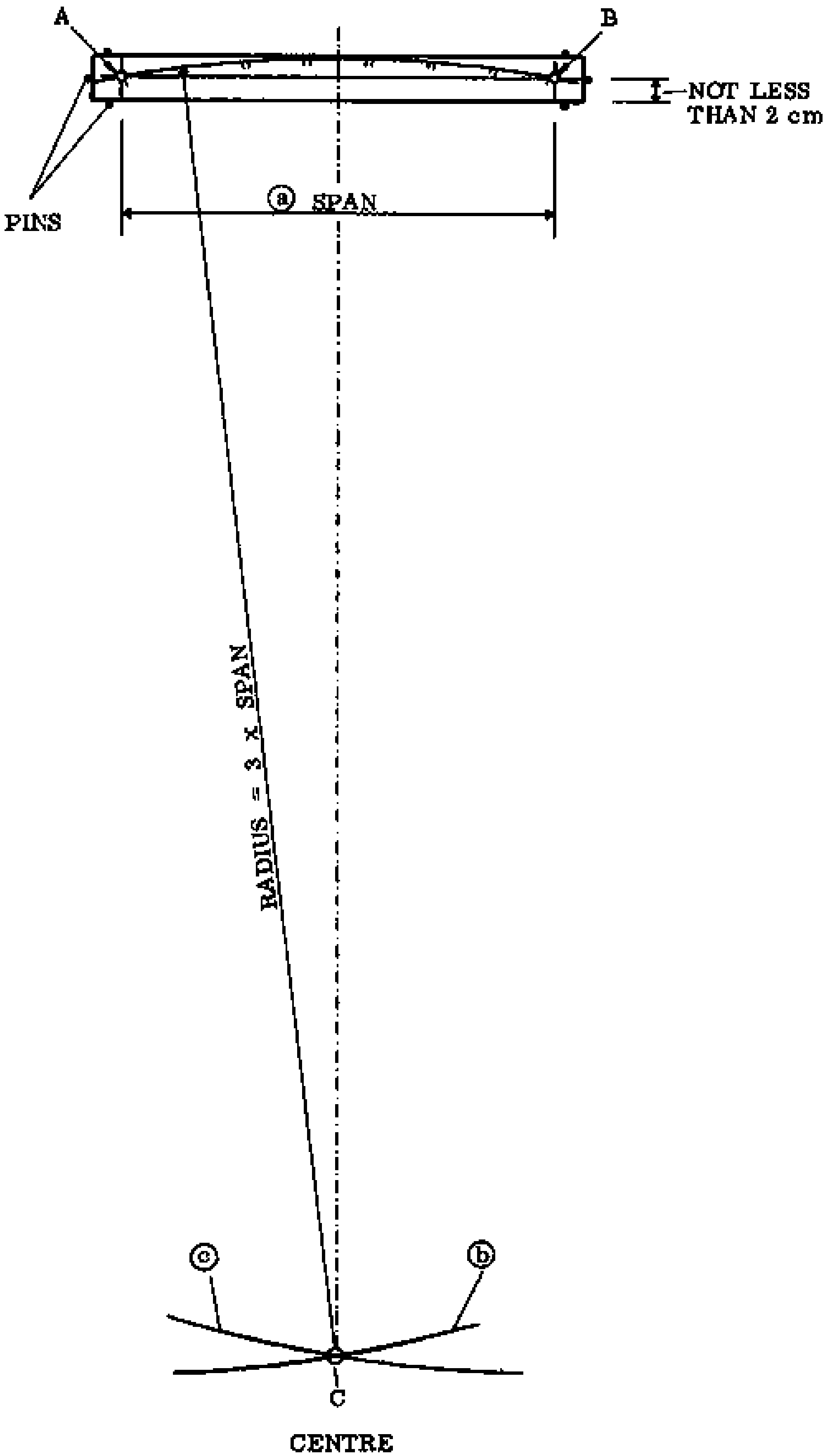

Fig. 1

Positions of the archstones

Regardless of which type of arch is constructed and what kind of archstones are used, the total number of blocks or bricks must add up to an odd number: the keystone in the middle is flanked by an even number of archstones (Fig. 1).

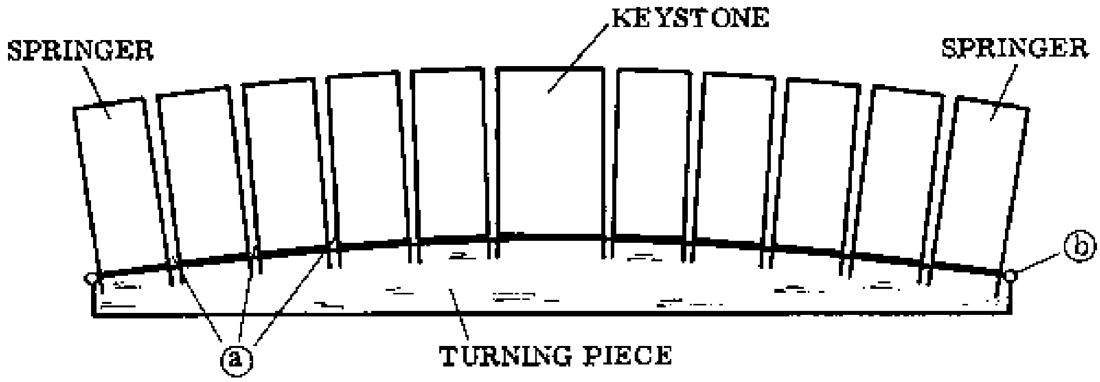

Fig. 1

Therefore the position of the keystone is usually marked first, followed by the archstones to the left and right. Cross joints are 1 cm wide at the intrados (Fig. 1, a), and wider at the extrados, because common blocks are used which results in wedge-shaped joints.

The marking continues until the springing points are either just reached or a little overlapped (Fig. 1, b). If it happens that there is a distance of more than 1 cm between the lower outside corner of the springers and the springing points, then one more block must be added to each side (Fig. 2). These two blocks will then become the springers, although they overlap by far the springing points.

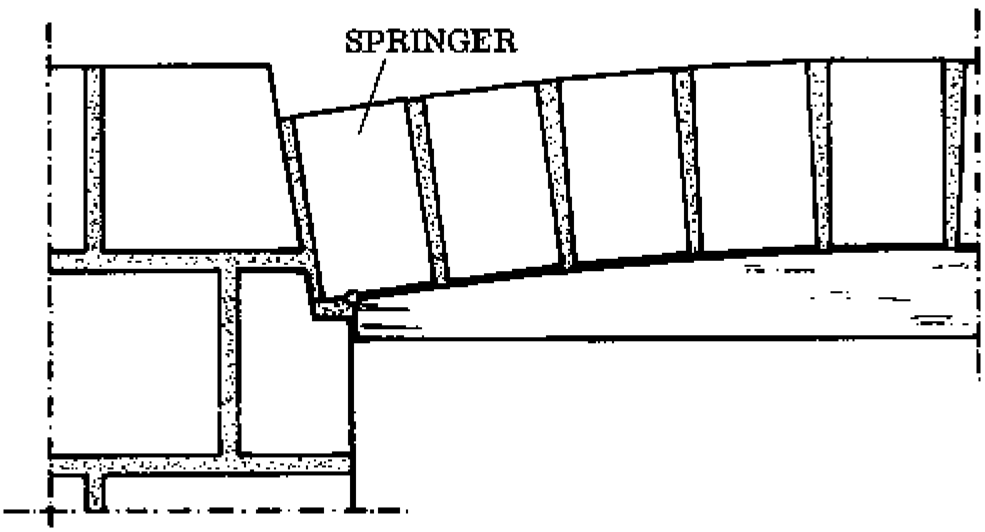

Fig. 2

There are two ways to avoid this:

- One can reverse the marking by starting from the springing points and marking by turns from the left and right up towards the crown. The remaining opening is then filled with either a specially made keystone, or with concrete (Fig. 3). This is preferred if the springers would overlap the springing points by too much.

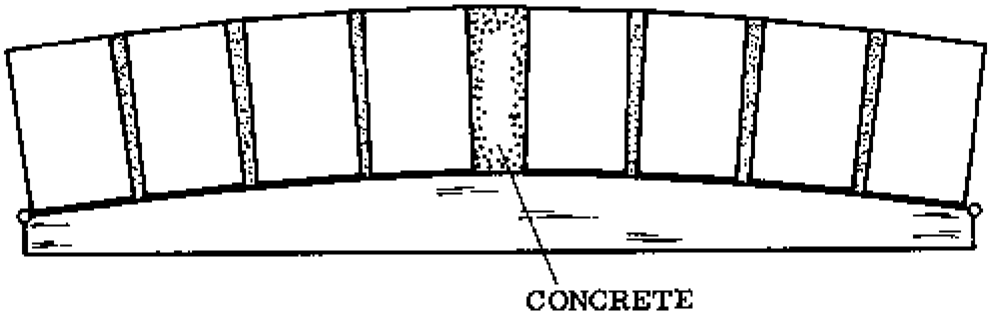

Fig. 3

- The most perfect solution would be to use specially made archstones which are wedge-shaped and fit exactly in the arch (Fig. 4). This requires some detailed and accurate planning, and more time and materials.

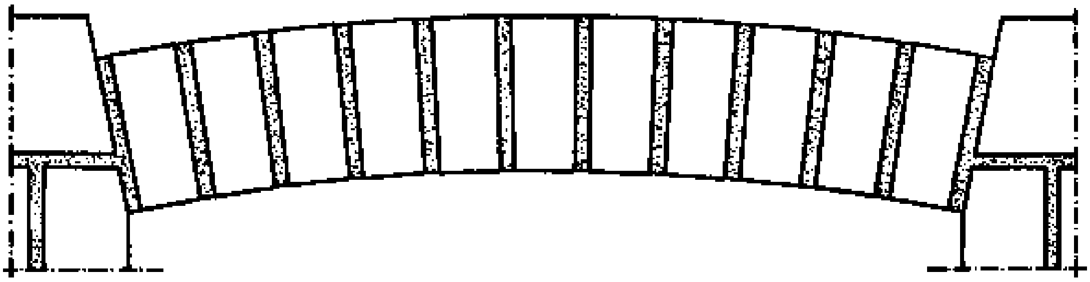

Fig. 4

NOTES:

Setting up the centring

The board on which we marked the curve of the intrados and the positions of the archstones is now prepared for assembly and erection.

The first step is to cut off both ends of the board squarely at the marks which indicate the span. These cuts must pass through the springing points. Then the intrados is roughly shaped with the saw and then exactly planed to the mark, to make a smooth and evenly curved edge.

If the centring will be a part of the frame, it is now fitted to the frame head as in Figs. 1 and 2, and set into its place together with the frame. In this case it is best to make two identical turning pieces to seal the camber on both sides of the wall. They are fixed outside and inside flush with the frame. The hollow part in between the pieces is filled with a mixture of sand and ash; both to keep insects out and - if there is no lagging - to give more support to the archstones which otherwise would have to rest on the turning pieces only.

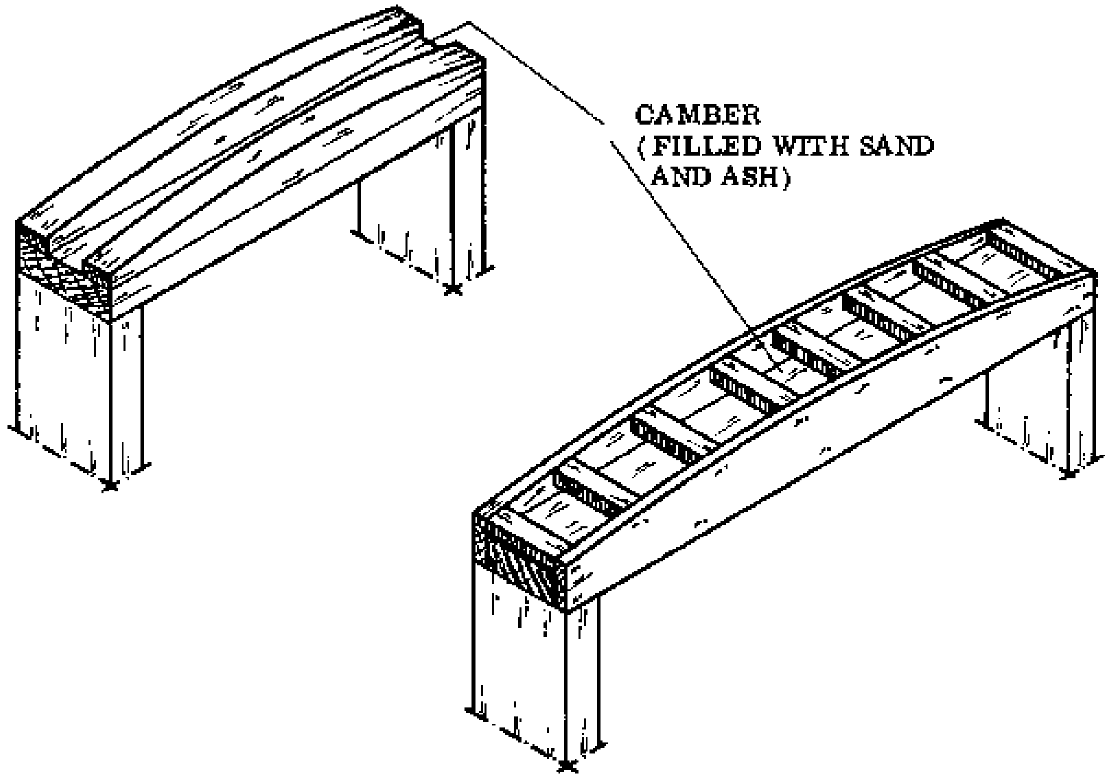

Fig. 1

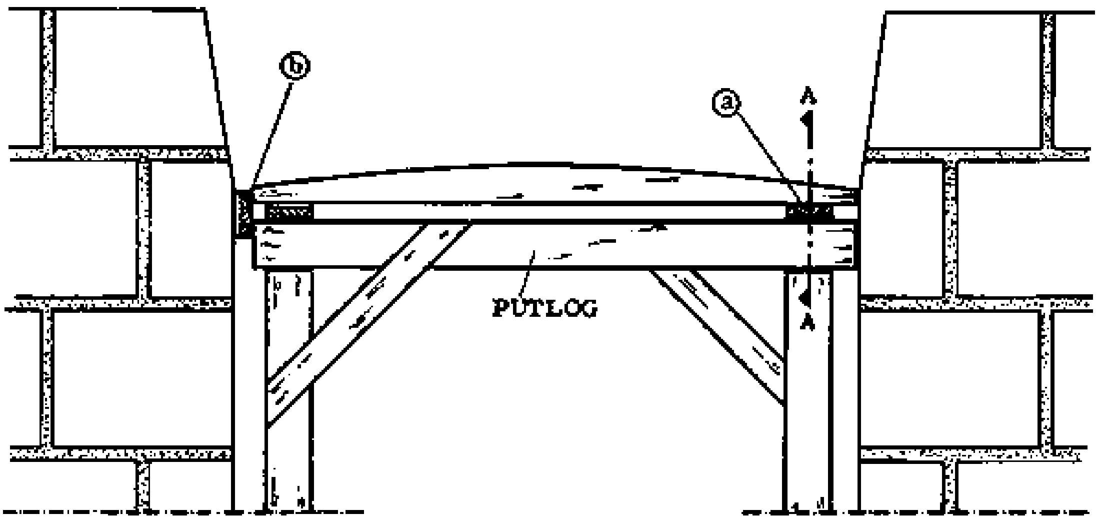

Fig. 2

Note that the marks of the springing points are cut off when the turning piece is combined with the frame. This is because it is cut flush with the outside of the frame. This means that the thickness of the joint between the frame and the wall has to be taken into account when marking the slope of the skewback.

If the centring piece is to be removed after the arch is finished, it must be set in a way so that it can easily be taken out. This is done by placing it on wedges as in Fig. 3, (a). It might be necessary to cut the turning pieces slightly shorter on one end so that the centring fits easily into the opening. In that case the end which has not been cut rests against the wall while the gap on the other side is closed tight with wedges to prevent shifting (Fig. 3, b).

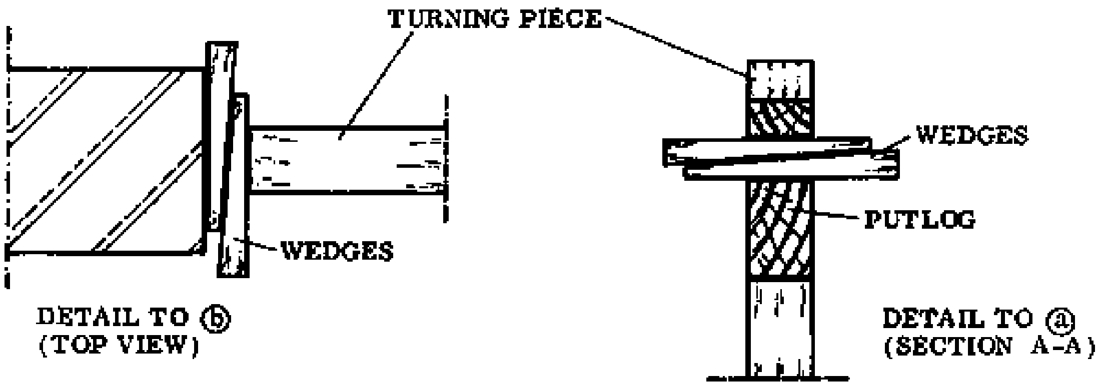

Fig. 3

Try to avoid making the springing points in line with a bed joint. The sideways force from the arch can possibly cause cracks along the bed joint. The best solution will be to distribute the pressure over two courses (Fig. 3).

When you set the centring piece in position, do not forget to level the soffit, which must be exactly horizontal and parallel to the springing line.

NOTES:

Skewback template

Before you can start laying the archstones, the abutments with their skewbacks must be prepared so that the springers can be laid at the correct angle. To be sure that the angle of the skewback is correct, the Rural Builder can use the template described below (Fig. 1).

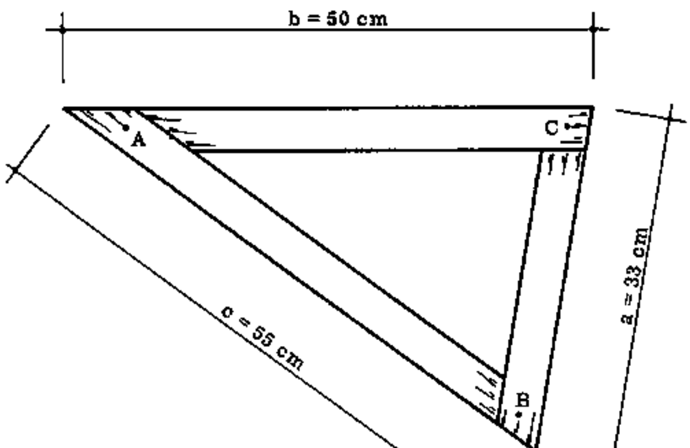

Fig. 1

This skewback template can only be used for a segmental arch where the radius of the arch is 3 times the span of the opening. Provided the rule of “r = 3 x span” is observed strictly, the same template can be used for any segmental arch, regardless of the length of the span. In other words the width of the opening and the size of the arch make no difference in the angle of the skewback for arches made according to this rule; the angle will always be the same.

- MAKING THE TEMPLATE: The template is made from wooden battens. It is simply a triangle with the outside dimensions as follows: side “a” = 33 cm, side “b” = 50 cm, and side “c” = 55 cm (Fig. 1). The angle at C is the angle we need to mark the skewback.

Use three battens that are a few centimetres longer than the measurements required. This allowance can be cut off when the template is assembled. Plane one edge of each until it is exactly straight and mark the length on this edge. Nail the battens together as in Fig. 1; or make accurate halving joints and join the pieces together with wing nuts instead of nails, so that they can be taken apart and put back together when they are needed in the future. The corners should be marked on both sides with the letters A, B and C, so that the ends are not accidentally mixed up when it is reassembled.

- USE OF THE TEMPLATE: The outside edge measuring 50 cm (side b) is held along the springing line, while the tip of the corner C is at the springing point (Fig. 2). The direction of the shortest side (side a) extended upwards with a straight edge gives the slope of the skewback. To mark the skewback on the other side, the template is simply turned around and the procedure is repeated.

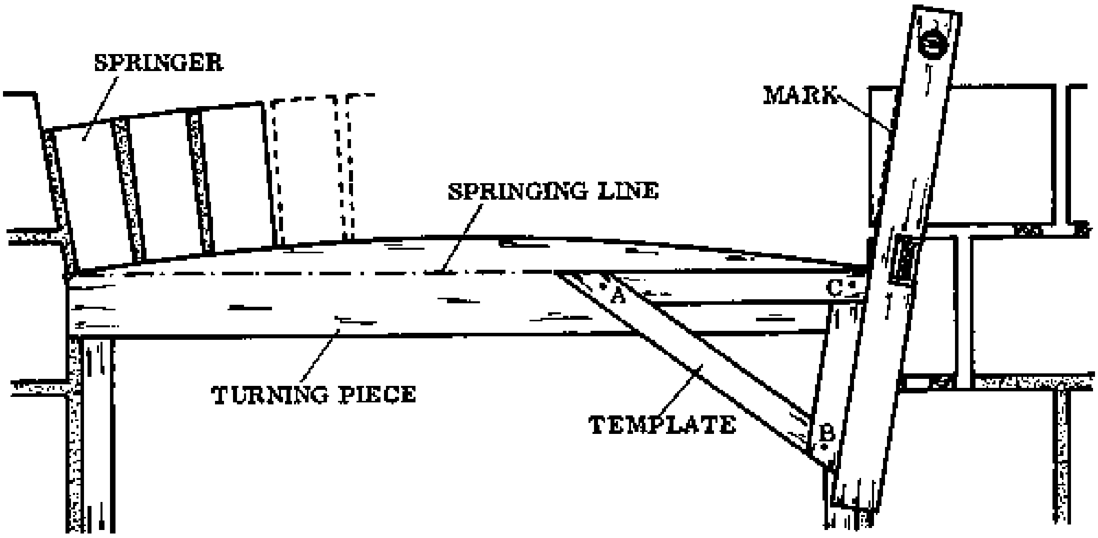

Fig. 2

- Note that corner B must always point downwards during the marking.

NOTES:

Laying the archblocks

The four blocks which have the skewbacks are marked and cut before they are laid in mortar. They are set temporarily in place on wooden battens which have the same thickness as the bed joint (Figs. 1 & 2, right sides). Mark the slope of the skewback with the template, and remove the blocks to cut them to shape. Then they can be laid in mortar and the arch can be continued.

Fig. 1 shows a segmental arch built with landcrete blocks. For this purpose, 1/2 blocks have to be cut, or preferably made specially in the Tek block press. This is easily done by putting a 1 cm thick board (for the 1 cm joint) edgewise in the middle of the mould box. The arch is built up by laying the blocks by turns on alternate sides, as indicated in Fig. 1 by the numbers.

The axis of each block should point towards the centre of the arch, with the result that ideally only the middle part of each block should rest on the turning piece, and the lower corners of the blocks do not contact the turning piece; there should be small wedge-shaped gaps. This is because the block faces are straight but the top edge of the turning piece is rounded.

The wedge-shaped joints between the archblocks need special attention. They must be properly filled with a rather wet mortar. If there is a gap left in the centre of the arch it is closed with concrete, which functions as a keystone (Fig. 1).

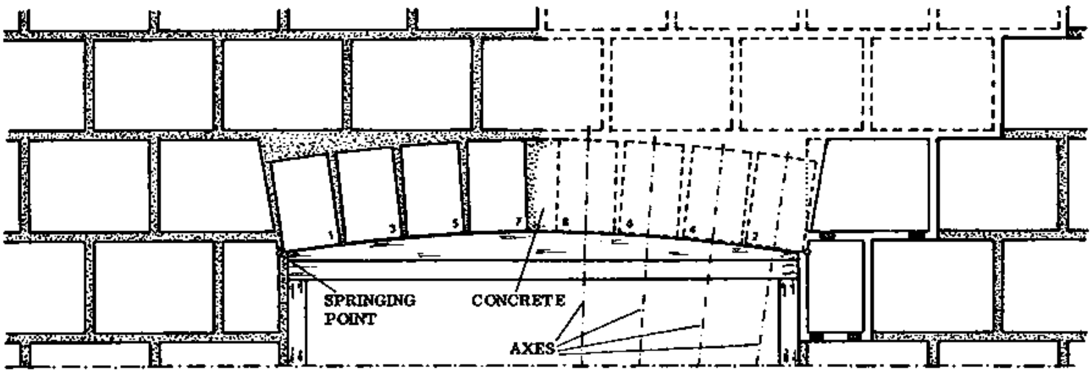

Fig. 1

Segmental arches over a span exceeding approximately 120 cm should be constructed with sandcrete blocks. The skewback blocks which abut the springers should also be sandcrete, so as to better distribute the pressure (Fig. 2).

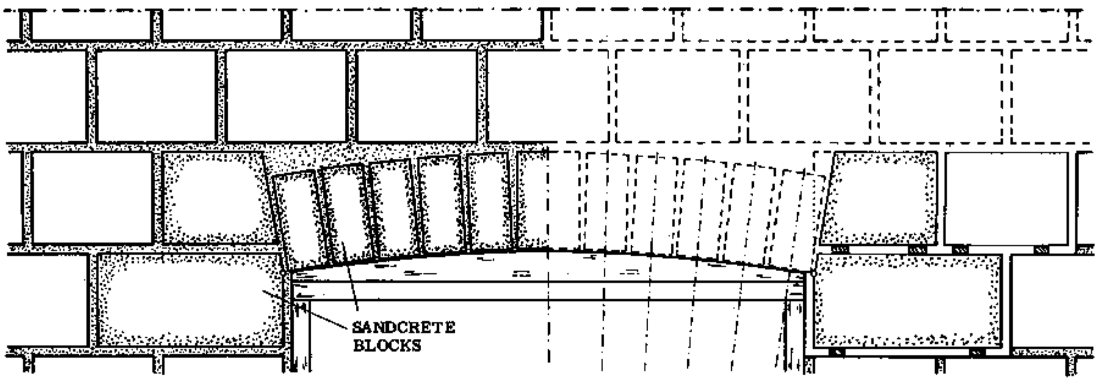

Fig. 2

To meet this requirement specially made blocks are needed. The skewback blocks must be 1 cm smaller in height than normal sandcrete blocks, so that they fit in with the landcrete courses. This is achieved by inserting a 1 cm thick piece of wood into the sandcrete block machine.

The archstones consist of 1/4 blocks which can also be made in the machine by inserting three 2 cm thick boards at a distance of 10 cm apart. The keystone is formed with a normal block of 15 cm thickness, cut to match the thickness of the wall.

If the centring is not combined with the frame, it is slightly lowered on completion of the arch, and removed after four days.

- NOTE: Try to set the centring so that the crown of the arch will be level with the top of the upper abutment course (Figs. 1 & 2) and not somewhere in the middle. The distance between the springing line and crown can be calculated as follows: 0,042 x span, plus height of archblocks.

REINFORCED CONCRETE LINTELS

Formwork

The formwork for cast-in-situ lintels consists of two main parts: the shuttering and the strutting. Precast lintels need only shuttering because they are cast on the ground.

- CONSTRUCTION: The construction of the formwork is shown in Fig. 1, page 167 of the Basic Knowledge book. This illustrates a situation where the frame will be set later or where there is an opening without a frame.

Since in most cases the frames are set already, the formwork does not require special strutting (Fig. 1). The head of the frame then acts as part of the soffit of the shuttering. The side boards must be fixed so that the vertical sides of the concrete lintel will be flush to the surface of the blockwork (Fig. 2).

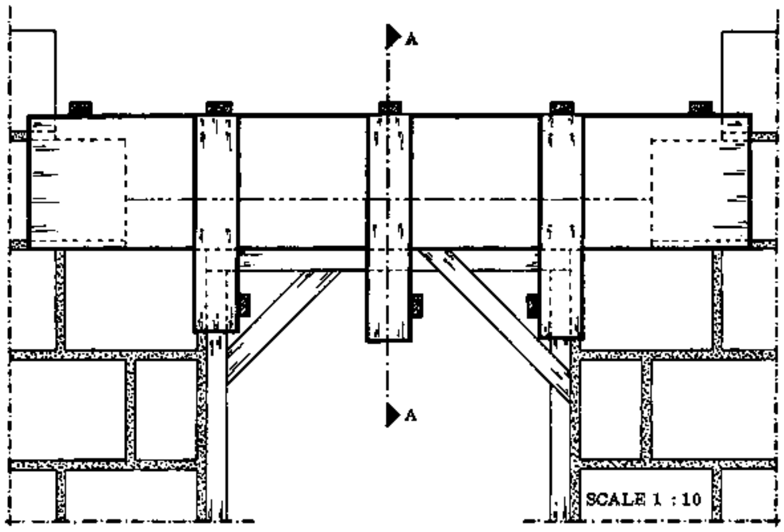

Fig. 1

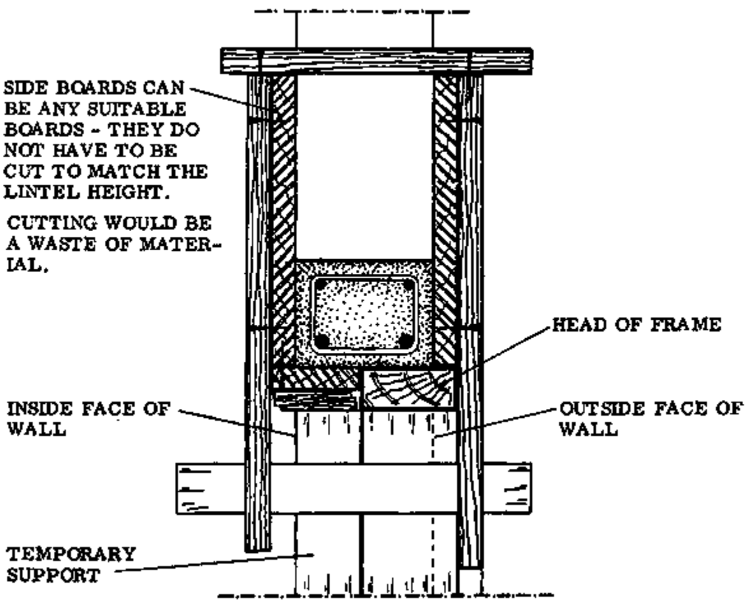

Fig. 2 CROSS SECTION A-A SCALE 1:5

- PREPARATION: If the lintel will not be plastered over later, the inside of the shuttering boards which are in contact with the concrete should be planed until they are smooth. This makes the stripping easier and also gives the concrete surface a nicer appearance. The inside of the shuttering may be treated with a special formwork lubricant, if this is available. Old engine oil can serve the same purpose; it should be applied lightly.

In case the lintel will be plastered later, it is better to leave the contact faces of the shuttering rough-sawn. Instead of oiling, wet the shuttering boards thoroughly with water, so that they don't absorb too much moisture from the freshly cast concrete.

Before casting the concrete make sure that the inside of the shuttering is clean; all joints, slits and gaps closed; and that the clear cover (the thickness of the concrete covering the reinforcement iron) is the correct thickness everywhere.

NOTES:

Reinforcement

The reinforcement for a lintel consists of a combination of different iron rods assembled to form a so-called “reinforcement cage” (see Basic Knowledge book, page 166).

In Rural Building the most commonly used reinforcement iron is round and has a smooth surface. It is available in rods with diameters ranging from 6 mm to 28 mm; but the most common sizes the Rural Builder uses are 6 mm (1/4”) rods and 12 mm (1/2”) rods.

If ribbed bars or tentor bars are available, these are preferred because the concrete grips better to a rough surface. Figs. 1a, b, c, and d show how the surfaces of some reinforcement bars look. Also see page 171 of the Reference Book.

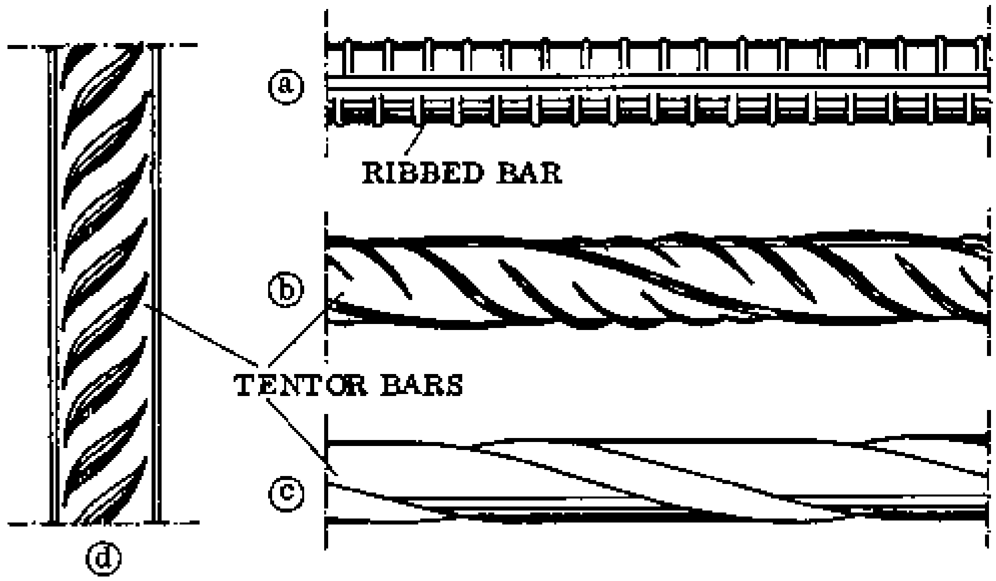

Fig. 1

- BENDING REINFORCEMENT BARS: According to how they will be used, sometimes iron rods must be bent or shaped to a hook form at the ends so that they can be well anchored. This must be done according to the following rules:

- All circular bars with smooth surfaces must have U-shaped end hooks (see Figs. 2a & 3a). For ribbed bars and tentor bars L-shaped hooks are sufficient (Figs. 2b & 3b).

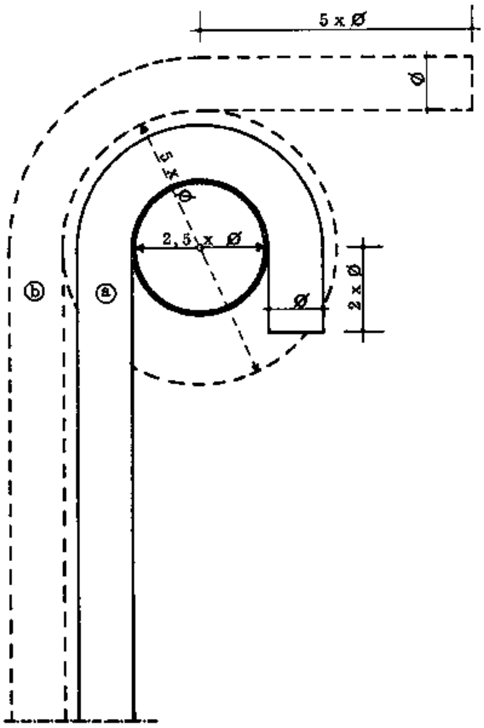

Fig. 2

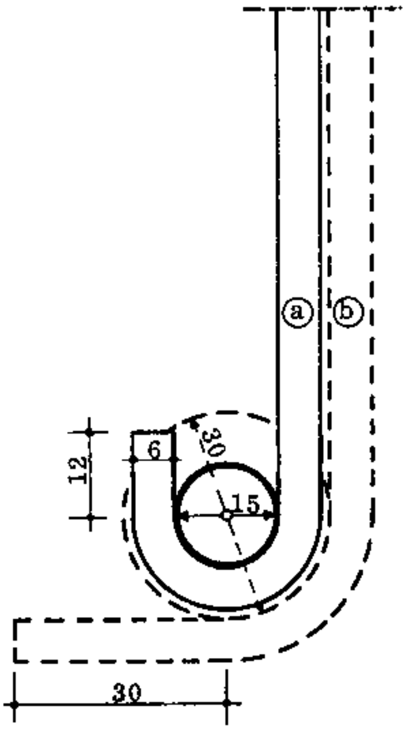

Fig. 3

- The minimum length for the straight end part of the hooks is: 2 times the rod diameter for circular bars; and 5 times the rod diameter for ribbed bars and tentor bars (Figs. 2 & 3).

- The smallest permissible bending diameter can be calculated according to the figures in the table below.

DIAMETER OF ROD	CIRCULAR BARS	RIBBED BARS & TENTOR BARS
6 mm up to 20 mm	2,5 x rod diameter	5 x rod diameter
22 mm up to 28 mm	5 x rod diameter	7 x rod diameter
more than 28 mm	-------------	10 x rod diameter

The smallest permissible bending diameter for the 6 mm circular bar in Fig. 3a will be 15 mm; or 2,5 x 6 mm. For the 6 mm ribbed bar in Fig. 3b, the bending diameter will be at least 30 mm, or 5 x 6 mm.

- NOTE: As a rule, main bars should never be extended. If this is necessary, the shortest overlap for bars under tension is 75 cm, and the ends of the bars must have U-shaped hooks (Fig. 4).

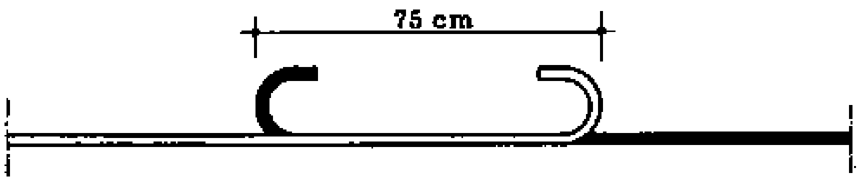

Fig. 4

Reinforcement systems

The construction of large reinforced concrete members usually requires complicated calculations to determine the diameters, number, shape and arrangement of the rods. This job should be left to a qualified design engineer.

However small and simple members of the structure such as lintels, columns, short span beams, etc. can be constructed by the Rural Builder according to the sketches, particulars and hints given here.

To place the reinforcement rods correctly, it is essential to understand and be able to predict in which part of the concrete member tensile stress (tension) is likely to occur. This is where the member has to be reinforced by the main bars. Fig. 1a shows the bold outline of a lintel; the dotted line shows how it would tend to bend under pressure. The arrows show how the whole upper part is under pressure, while the lower surface is under tension.

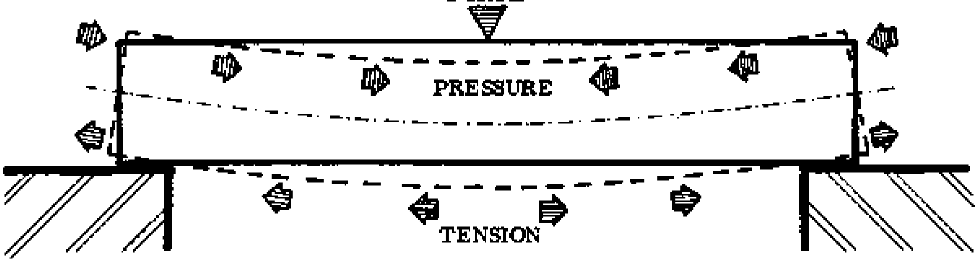

Fig. 1a

Fig. 1b illustrates how the lintel can be reinforced against this tension. Note that the main bars are on the bottom, in the zone which is under tension; and that the ends of the main bars are anchored on top, within the zone that is under pressure.

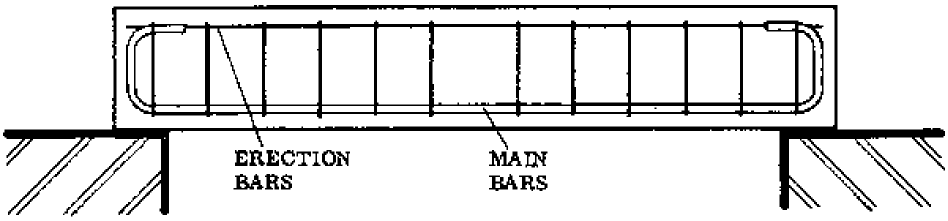

Fig. 1b

Fig. 2 shows another situation, where a beam is supported from one side only. This is called a cantilever beam. The unsupported end will tend to bend as shown. Here the main bars are on top to counteract the tension in the top surface (Fig. 2b).

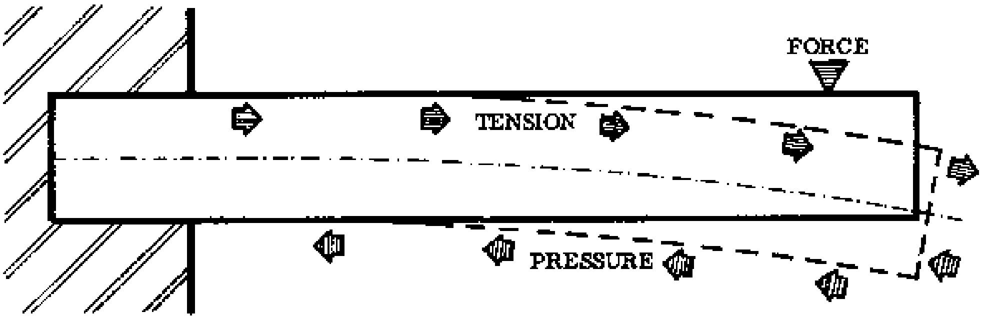

Fig. 2a

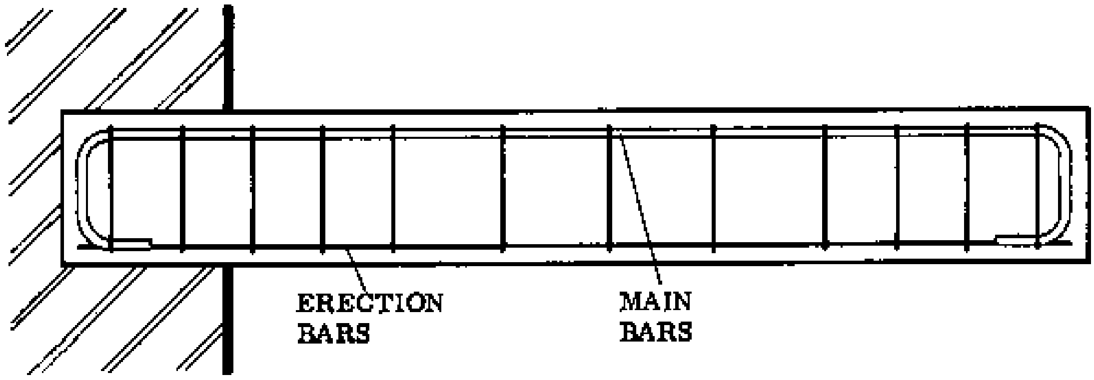

Fig, 2b

NOTES:

The longer reinforced beam or lintel shown here in Figs. 1a and 1b is reinforced with main bars on the top and bottom.

The cross section in Fig. 2 shows how the clear cover is measured from the outside of the stirrups to the outside face of the concrete. In other words, the clear cover or concrete cover is the distance between the concrete surface and the nearest reinforcement bar, regardless of the function of the bar.

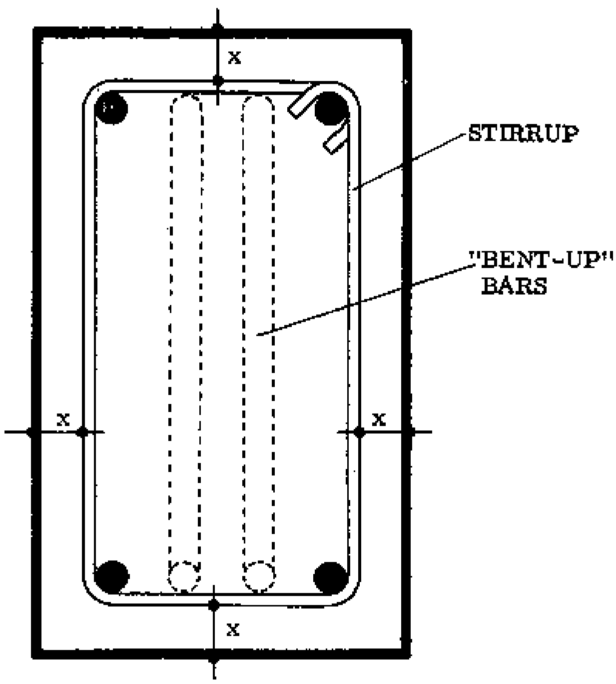

Fig. 2 CROSS SECTION A-A

x = CLEAR COVER

The distance between the stirrups is never more than 20 cm. For safety, the Rural Builder is advised to put the stirrups no more than 15 cm apart. The stirrups closer to the supporting walls (50 cm away and closer) should be no more than 10 cm apart (see the illustrations here and on the next page).

So-called “bent up” bars are sometimes used as part of the reinforcement system (Figs. 1 & 2) but these are not used in Rural Building because of the difficult calculations required to place them correctly; also they are not necessary for the small structural members which are required in Rural Building.

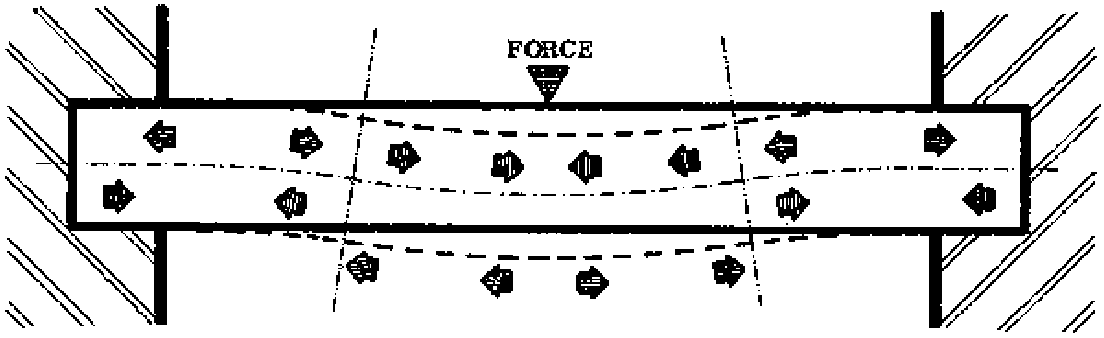

Fig. 1a

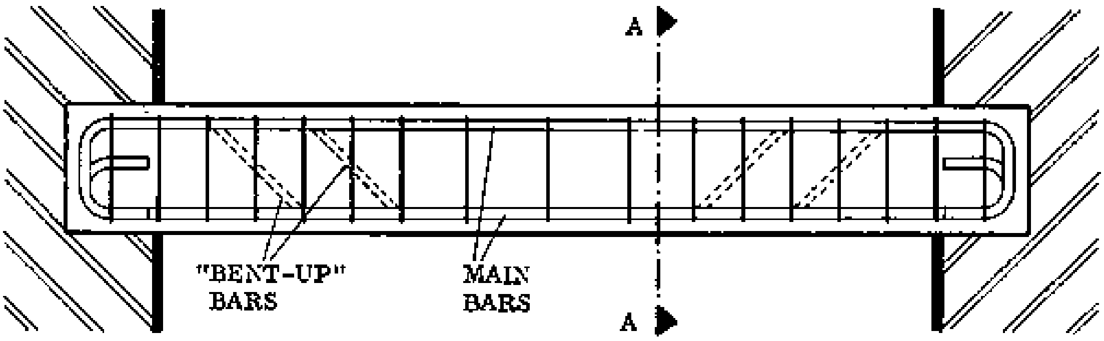

Fig. 1b

NOTES:

On the left is a drawing of a reinforcement system for a continuous beam; this might occur for example in an eave beam supported by a reinforced pillar (Fig. 1).

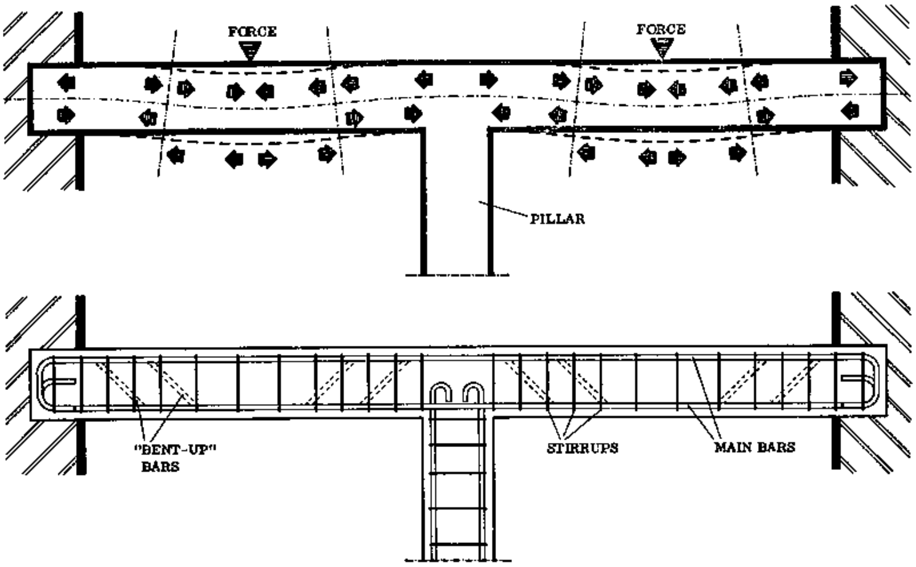

Fig. 1

Corrosion in reinforced concrete

It may seem strange, but the weakest part of a reinforced concrete structure is the hard iron, because it is easily broken down if it is not protected well. The structure remains stable only as long as the iron is protected against corrosion.

The main problem with reinforced concrete is the development of very small cracks in the concrete, which means that the iron is exposed to air and becomes rusty. On the concrete surface below the cracks, reddish brown rust stains appear. Once these are visible it is usually too late to save the member.

Unless immediate protective measures are taken, the rust develops more and pressure builds up between the iron and concrete, causing the concrete cover to break open; this speeds up the rusting process and eventually the reinforcement bars become too weak to carry loads or to withstand other forces. The system then collapses.

- PREVENTION OF CORROSION: Here we must include a strong warning against over-reliance on concrete strength. Not only laymen, but also many construction experts believe “the more cement, the harder and the better the concrete”, and they tend to improve the mix proportions by using greater amounts of cement. This is wrong, because very hard concrete is not only expensive but it is also not necessarily the best protection against rust. Therefore, the Rural Builder is advised to follow the correct mix proportions.

If possible use high quality steer for the reinforcement as this does not rust as easily as common circular bars.

The surface of the concrete should be protected against the weather by the application of a waterproof cement paint (see Reference Book, page 201). However, such a paint coat is wasted if rust stains are already present. The paint does not seal the cracks and only makes the stains disappear for a short time, if at all.

- NOTE: Never apply paint on concrete surfaces that have not set hard yet. Possible shrinkage of the concrete during the hardening process would cause tiny cracks in the paint coat, making the paint useless as protection against the penetration of water and air.

WALLING ABOVE FRAMES

The last part of the walls above the frames should consist of at least three courses of blocks, so that the roof construction can be well anchored. Experience has shown that anchoring the trusses in the ring beam alone is not sufficient for them to withstand strong wind forces. Therefore, the anchorage irons are placed in the first bed joint just above the frames (see Anchorage, page 197).

If the exact positions of the trusses are not known yet, the irons can be set later, in the finished wall. This is done by passing the iron through a hole chiselled in the bed joint (Fig. 2 a). It is generally better and easier though to plan ahead and place the irons during the wall construction. The irons are set in grooves so that they will be flush to the wall surface and will be covered and protected later by the plaster or render.

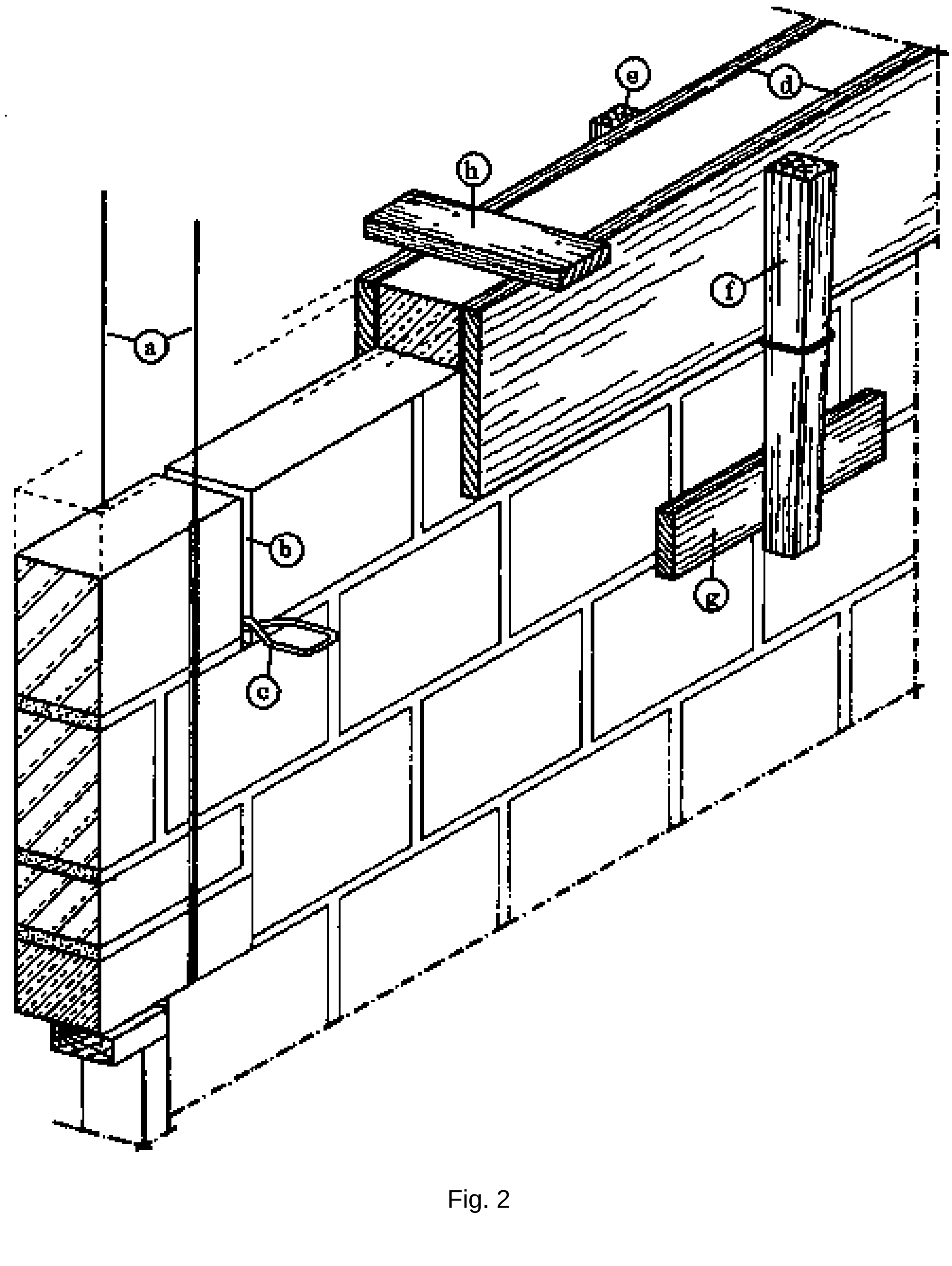

Fig. 2

FORMWORK SYSTEM FOR RING BEAM

If a reinforced concrete ring beam will be made, every third cross joint in the last course is left open (Fig. 2, b) so that formwork clasps can be inserted.

These special clasps have been developed and manufactured at NPVC in order to save strutting materials and to ease the construction of the formwork for a ring beam. Formerly long standards and braces in great number were needed to construct the formwork. With the clasp however, only a few short boards are necessary for the bracing. The formwork clasps are easy to handle and have passed all tests at NPVC. They are made from a piece of iron rod bent as shown in Fig. 1, and welded to hold the loop ends closed.

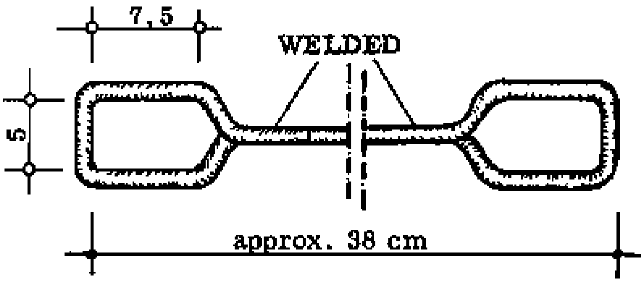

Fig. 1

Fig. 2 shows the formwork system, and Fig. 3 shows the cross section. When the clasp is inserted in the open cross joint (Fig. 2, c) the remaining open space must be closed with paper (empty cement bags) to make it possible to remove the clasp later. The side boards (d) rest on the clasps and are pressed against the wall by straight boards (e) on one side, and wedge-shaped boards (f) on the other side. Short pieces of board below the side boards (g) act as distance pieces to keep the shuttering boards plumb. Cleats or spreaders (h) may also be used to maintain the correct width of the beam. There are no nails used, except for fixing the cleats, which reduces the damage to the boards.

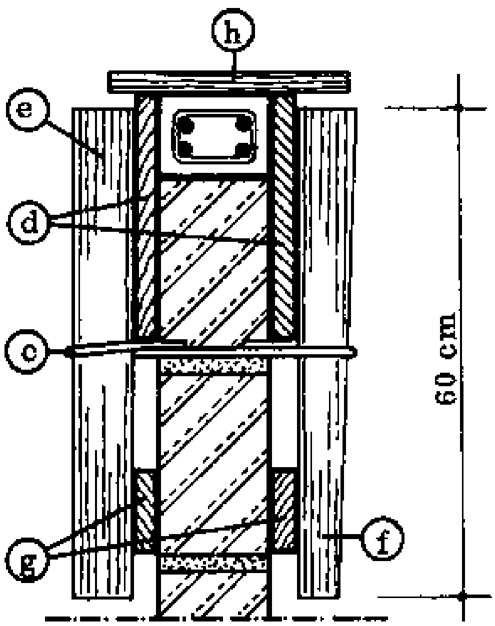

Fig. 3

The Rural Builder is advised to supply himself with at least four clasps and to carry them along with his set of tools.

ROOFS IN GENERAL

The roof is a very important part of the building structure. It performs several essential functions:

- It gives shelter to people.
- It provides shade.
- It isolates the building from cold and heat.
- It keeps out dust and dirt.
- It protects the interior of the building.
- It sheds rainwater.

Roof types

There are many different types of roofs. In Rural Building we deal only with the following four types:

- The lean-to roof (Fig. 1)

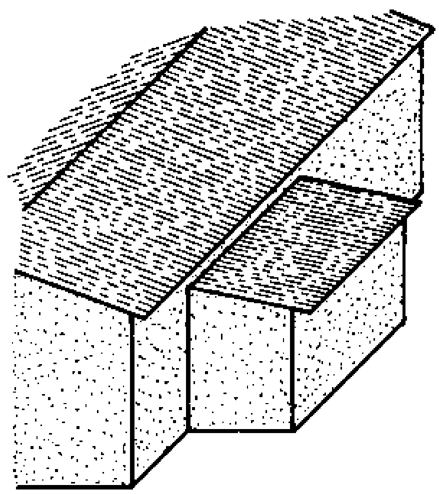

Fig. 1

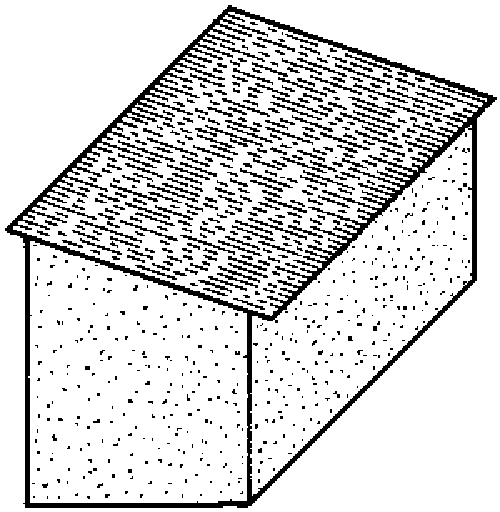

Fig. 2

- The pent roof (Fig. 2)

- The gable roof (Fig. 3)

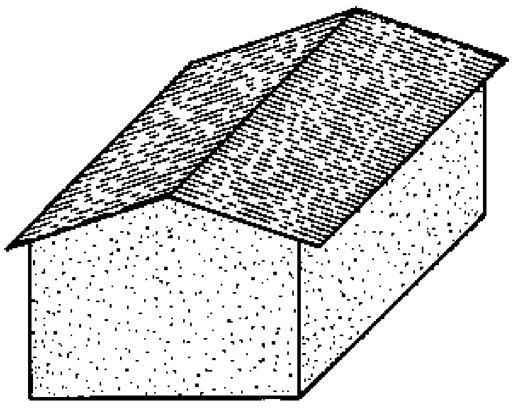

Fig. 3

- The hipped roof (Fig. 4).

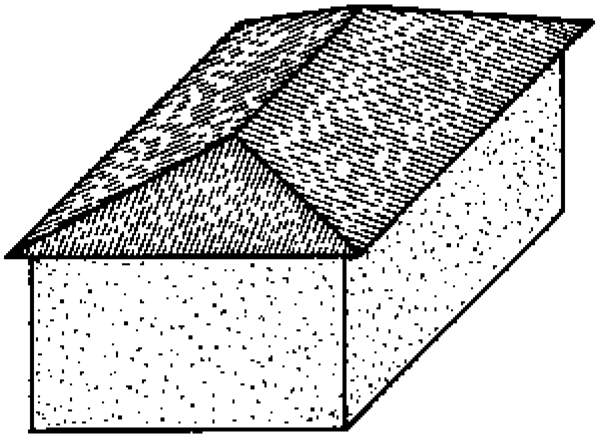

Fig. 4

These roofs will be described in detail in the following sections of the book. In the next few sections we will describe some factors which are important in the construction of all roofs. These must be understood well before we can go on to describe the construction details of the particular roof types.

NOTES:

Size of the roof

The cost of roofing sheets will be a significant part of the cost of the whole building. Therefore it is the size of the roofing sheets which will determine the size, and especially the width, of the whole building.

For this reason, we make an outline design of the roof before we determine the other measurements of the building. We cannot design the building first and later fit a roof on it. The outline design tells us the width that our building should have so that we can fit a roof on it without unnecessary and wasteful cutting and trimming of the sheets (Reference Book, pages 239 & 240).

To make the outline design of the roof, we need to know:

- the pitch of the roof
- the effective length of the sheets
- the distance the roof will project past the outside walls of the building.

Roof pitch

The angle of the slope of the roof is called the pitch. Most roof types have a standard pitch. If corrugated sheet materials (Reference Book, pages 230 and 231) are used, the pitch angle should be between 15 and 20 degrees (Fig. 1).

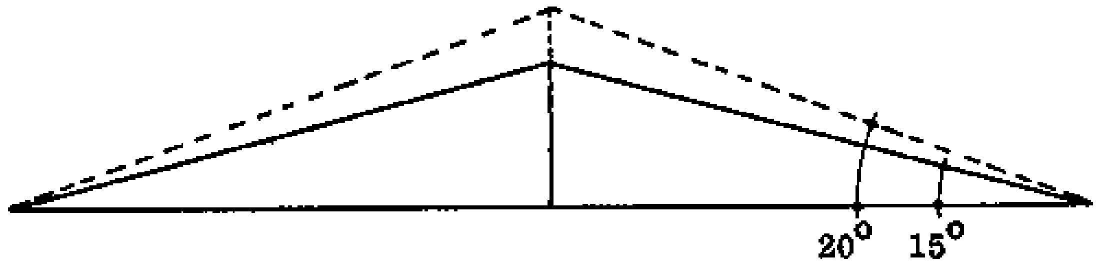

Fig. 1

NOTES:

Effective length of the sheets

The effective length of roofing sheets is the length of the sheet (x) minus the overlap (y) between the sheets (Fig. 2).

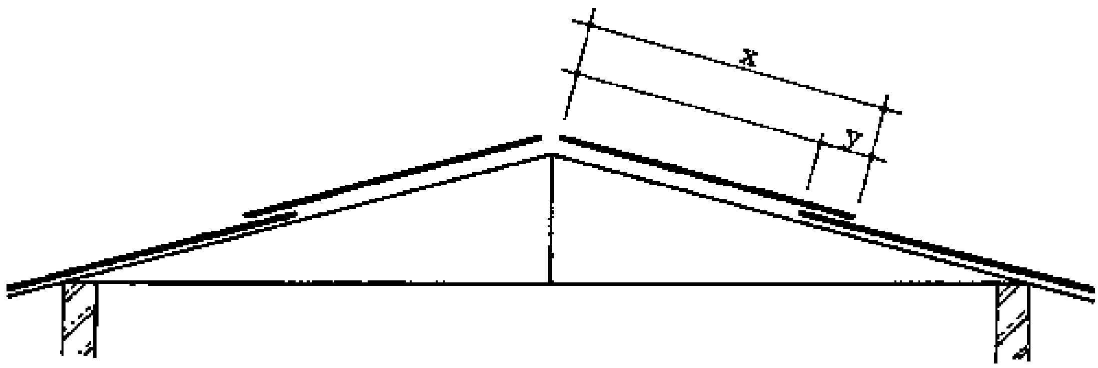

Fig. 2

The minimum overlap in the length for corrugated sheeting materials is 15 cm. The most common length for roofing sheets in Ghana is 244 cm.

In order to use the sheet materials as economically as possible, we use either 1, 1 ½, 2, 2 ½ or 3 (and so on) sheets to cover the distance from the highest point of the roof to the lower edge. Thus the effective length will be:

-	for 1 sheet	-	244 cm
-	for 1 ½ sheets	-	244 cm + 122 cm - 15 cm = 351 cm
-	for 2 sheets	-	244 cm + 244 cm - 15 cm = 473 cm
-	for 3 sheets	-	(244 cm x 3) - (15 cm x 2) = 702 cm
-	and so on.	-	

NOTES:

Outline design

The outline design should be made in as large a scale as possible, since it is used to find some measurements for the future building design.

a. Draw a horizontal line (line 1).

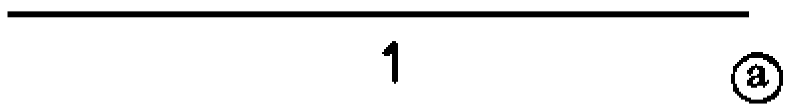

b. Draw line 2. The angle between line 1 and line 2 should be the angle of the pitch of the roof.

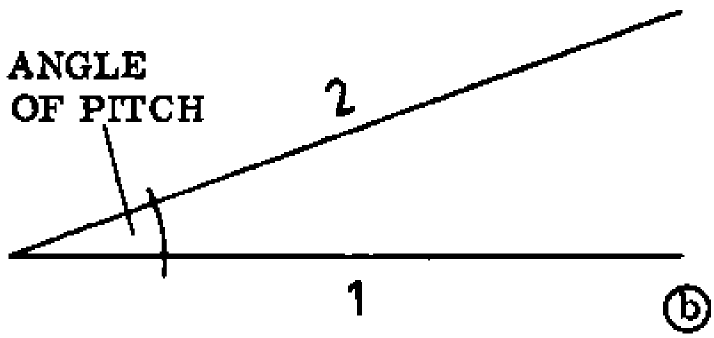

c. Extend line 2 to show the projection of the roof beyond the wall of the building. Mark point x at the end of line 2.

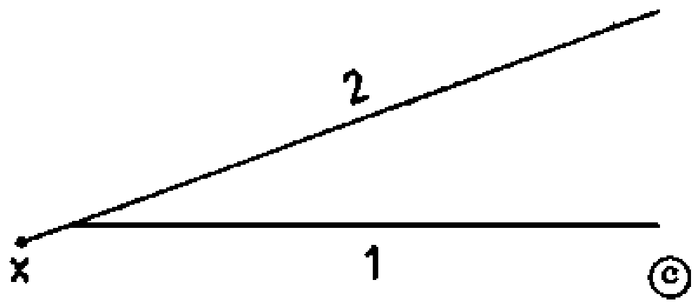

d. Measure the effective length of the sheets from point x, remembering to sub tract the overlap. Mark point y on line 2.

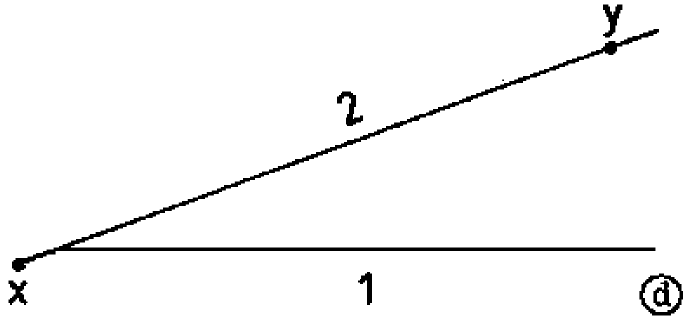

e. Make a line perpendicular to line 1 and passing through point y. This is line 3. Mark point z on line 1.

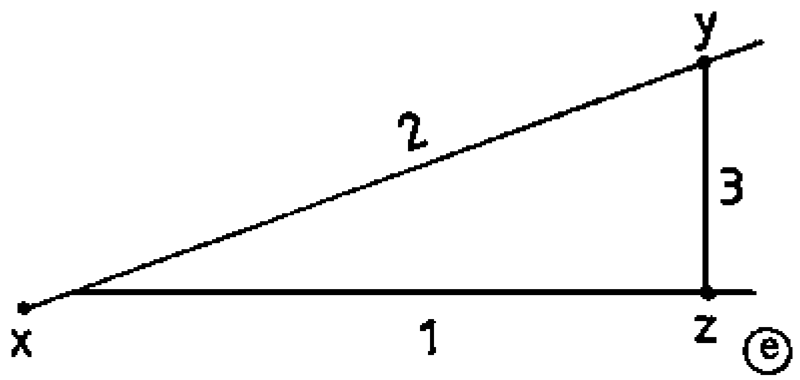

f. If a lean-to or pent roof is planned, the length of line 1 up to point z gives the width of the building. Now indicate the supporting walls and the sheets with the overlap. In a lean-to roof, remember that the end of the sheet at the top is en closed in the wall; and for the pent roof, the sheets project past the wall on the top side.

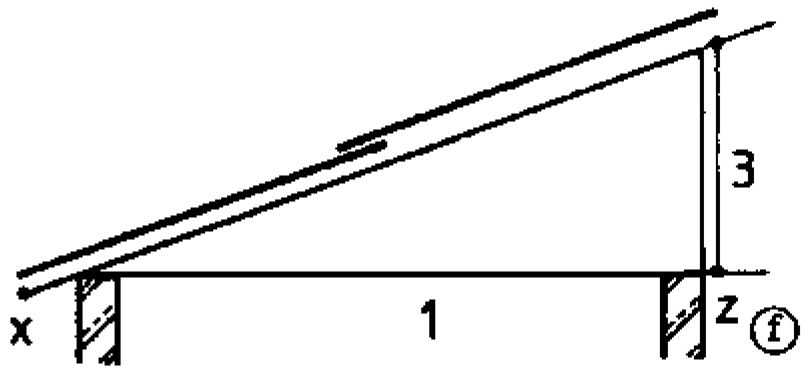

g. If a gable roof is planned, draw the other half of the roof in the same manner. The extended line 1 will give the width of the building.

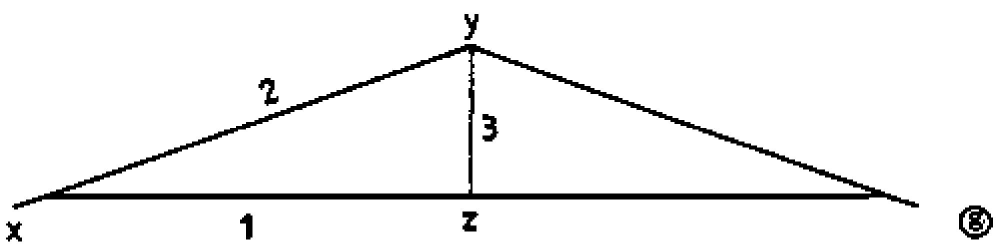

h. Indicate the supporting walls, sheets and the overlap.

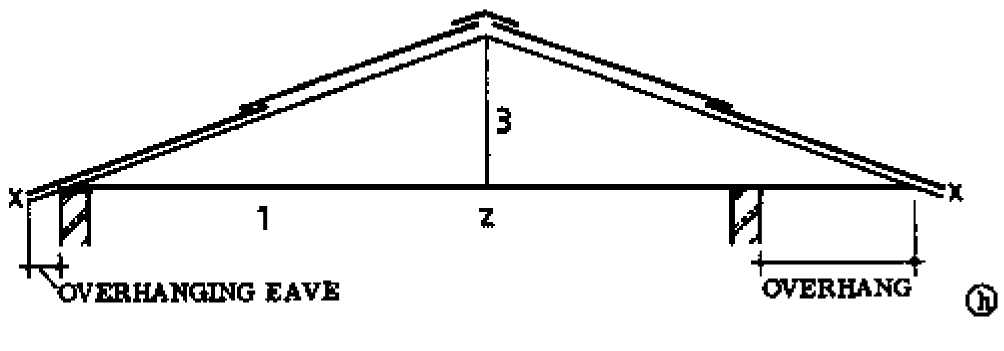

- TERMS: The point where the sloping lines meet, point y, is called the “ridge”. Line 3 is the “rise” of the roof.

If the horizontal line (line 1) projects beyond the supporting walls, the projecting part is called an “overhang”.

If the sloping part projects beyond the wall, the projecting part is called an “overhanging eave”.

The lowest part of a sloping roof is called the “eave” (point x).

NOTES:

Loads

In order to build a good strong roof, it is necessary to take into account certain forces that will affect it. We call these forces “loads”.

Some of the loads come from the weight of the roof itself and the ceiling. These are called “dead loads”. They consist of: (see Fig. 1)

- the weight of the roof covering
- the weight of the roof construction
- the weight of the ceiling
- the weight of anything attached to the ceiling such as ceiling fans or light fixtures.

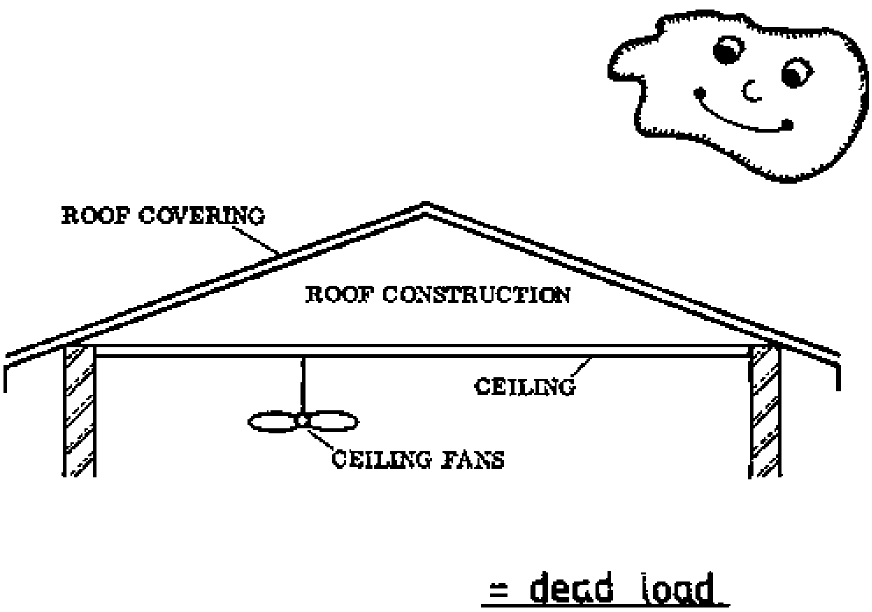

Fig. 1

Other loads are caused by external (outside) forces such as rain or wind. These are called "external loads". External loads are: (see Fig. 2)

- windloads
- rainloads

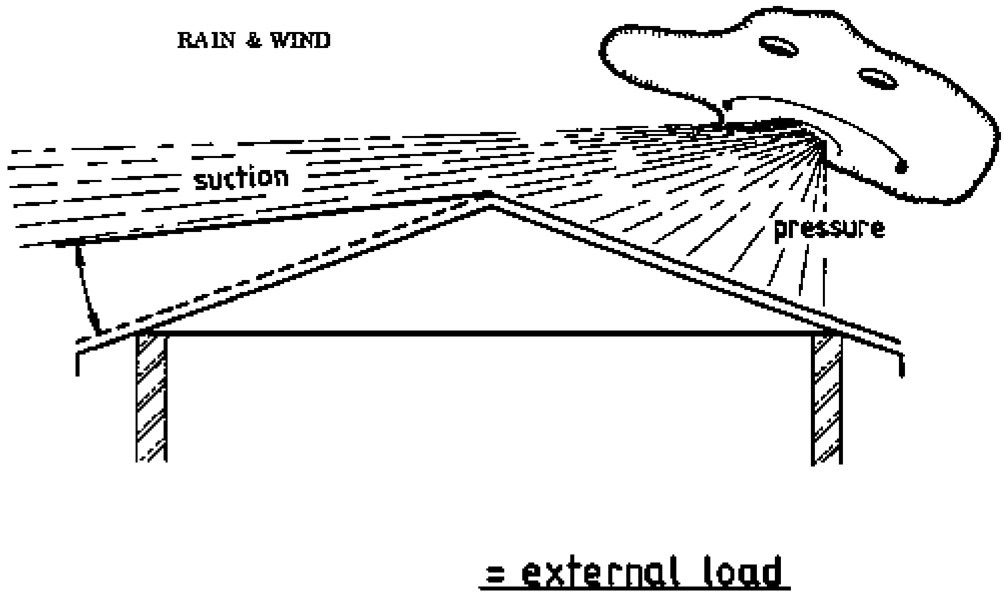

Fig. 2

All loads, external and dead loads, must be taken into account in the planning and construction of a roof.

The most dangerous load in Ghana is the windload. Strong winds or storms can cause a lot of damage to a roof if it is not well made and securely fixed to the building.

One particular danger is the suction on one side of the roof caused by the wind, which creates pressure on one side and suction on the other side of the roof (Fig. 2). This suction on roofs can be demonstrated by an experiment. Fold a sheet of paper in half and blow over the top edge. The other half of the paper will be lifted up by suction.

- SHAPE OF THE ROOF WITH RESPECT TO WINDLOAD: Roof constructions can be severely damaged by storms. Apart from the precaution of anchoring the roof well, which will be discussed later, there are some ways to shape a roof so that it is less vulnerable to the force of the wind:

- Consider carefully the pitch of the roof. Roofs with a pitch of less than 10 degrees are much more prone to high suction forces.

- 15 to 20 degrees is a better roof pitch, because it causes less suction.

- Consider making a hip roof instead of a gable roof. This will decrease the suction even more.

- See the Drawing. Book, pages 105 and 106, for more suggestions.

LIGHT-WEIGHT STRUCTURES

As the span (width) of the building increases, the strength of the roof construction must also be increased. Formerly this was done by using thicker and wider timbers (Fig. 1).

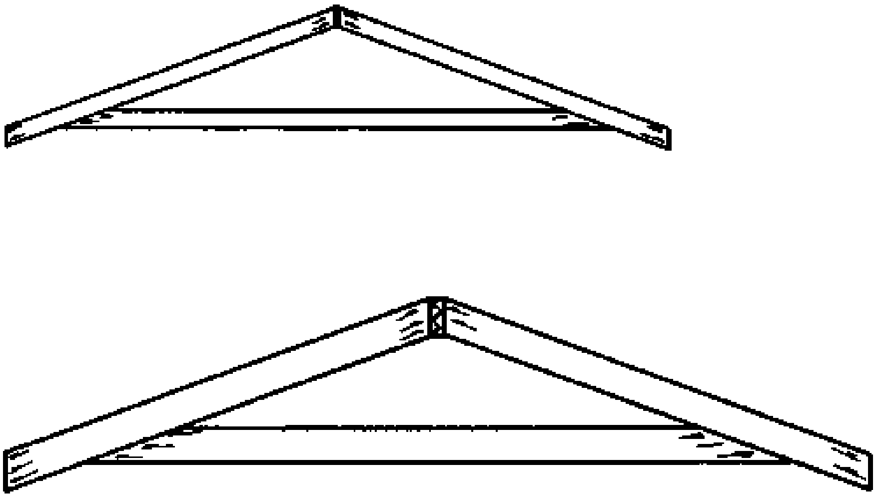

FOR INCREASED SPAN LARGER TIMBERS ARE USED

Fig. 1 TRADITIONAL ROOF CONSTRUCTION

This method resulted in very heavy and expensive roof constructions. Large timbers are normally much more expensive than smaller timbers (compare the cost of 5 x 7,5 cm Odum and 5 x 15 cm Odum).

This kind of roof construction is now uneconomical, as well as difficult because of the complicated joints needed for large timbers.

In modern light-weight structures, the strength of the roof is increased for larger spans by building up brace structures in the shape of triangles (Fig. 2), instead of using larger timbers. This construction uses small timbers, which are cheaper and lighter in weight; therefore we get a light-weight structure.

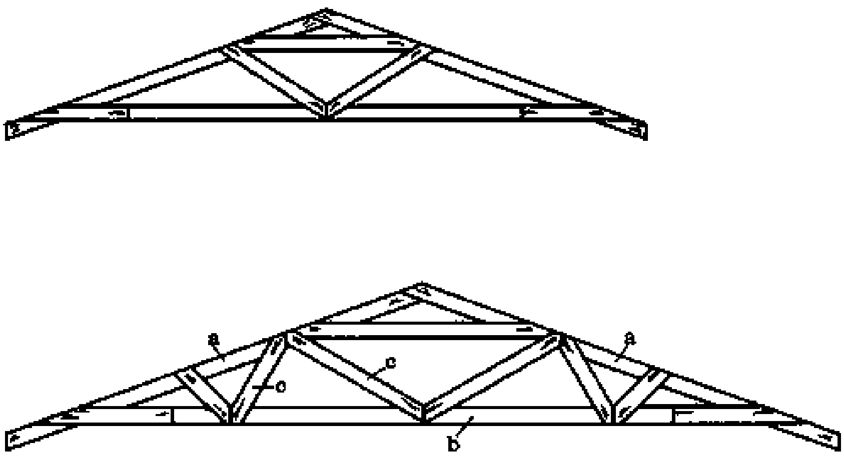

FOR INCREASED SPAN MORE BRACES ARE USED

Fig. 2 MODERN LIGHT-WEIGHT STRUCTURES

Light-weight structures are less costly, and result in a smaller dead load on the roof. Another advantage is that we can use simple joints instead of complicated roofing joints.

Since the construction is built up from small members, it is sometimes called a “built-up structure”. This is the only type of roof construction we will learn in Rural Building.

- TERMS: The sloping members are called “rafters” (Fig. 2, a).

The horizontal member is called the “tie beam” (b).

The members strengthening the construction are called “braces” (c).

NOTES:

Basic shape of the roof construction

It is essential that the roof construction remains rigid. To ensure this, we need to find a shape for it which cannot be distorted.

- NOTE: The only construction shape that cannot be distorted is a triangle.

The strength and efficiency of the triangular construction can be proven by experiment:

For example, a square shaped construction (Fig. 1) can easily be distorted. The only resistance to the distortion is in the corner joints. This construction is called a “non-perfect” or imperfect structure.

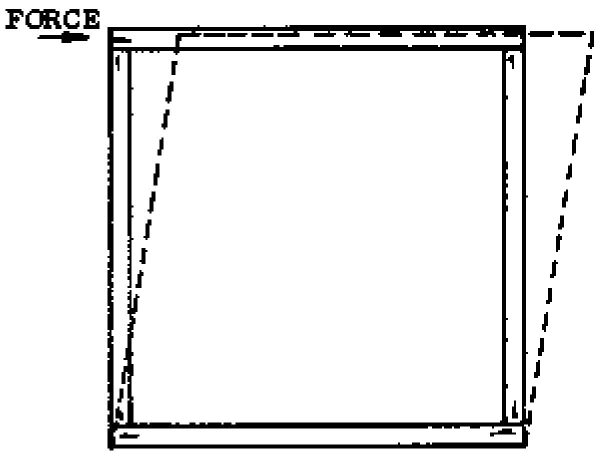

Fig. 1

A triangle shaped structure cannot be distorted (Fig. 2). When force is applied to any part of it, the frame remains rigid. This construction is called a “perfect” structure.

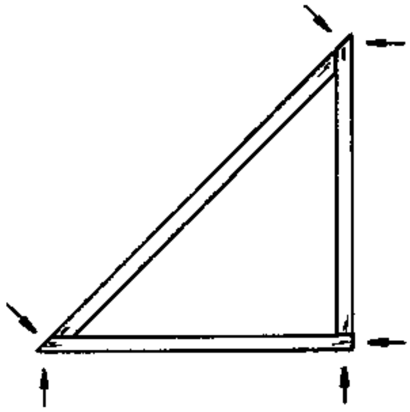

Fig. 2

As soon as a diagonal brace is introduced to a square shaped frame (Fig. 3), it becomes rigid. The brace changes the square shape into two triangles, making it a perfect structure.

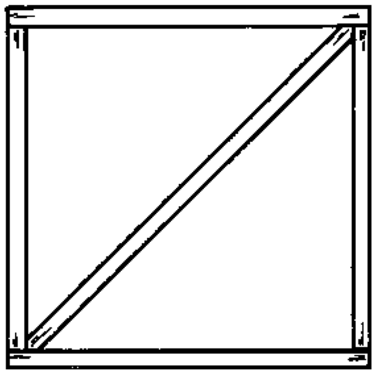

Fig. 3

If the brace were to be installed vertically or horizontally instead of across the diagonal, the structure could still be distorted because it would still be non-triangular, and thus an imperfect structure.

There are many examples of triangular constructions in our surroundings. Look at a bicycle frame, scaffold braces or braces for a door frame, for example.

In Fig. 4 are shown some perfect structures.

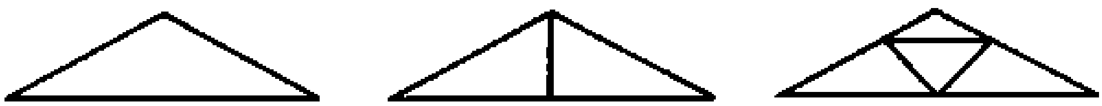

Fig. 4 PERFECT STRUCTURES

In Fig. 5 are shown some imperfect structures.

Fig. 5 IMPERFECT STRUCTURES

In roof construction, it is essential to make only perfect structures.

Technical terms

- TIE BEAM: This is the horizontal member of the roof structure which ties together the feet of the rafters (Fig. 1, next page).

- RAFTERS: These are the sloping members which give support to the purlins (Fig. 1, next page).

- BRACES: These are the members which strengthen the construction.

- ROOF TRUSS: This is the structure made up of the rafters, tie beam and braces, which forms the main load carrying unit in some kinds of roofs.

- PURLINS: These members lie across the rafters and support the roofing sheets.

- RIDGE: This is the highest point of a roof construction.

- RISE OF THE TRUSS: This is the vertical height of the truss (Fig. 1, a), measured between the highest point of the truss and the soffit of the tie beam.

- SPAN OF THE TRUSS: This is the clear horizontal distance between the internal faces of the rafters (b) at the point where they meet the soffit of the tie beam.

- SPAN OF THE BUILDING: The building span is the clear horizontal distance between the inside faces of the walls which support the roof (c).

- OVERHANG: When the tie beam projects beyond the supporting wall, the projecting part is called the overhang (d). The overhang is measured square to the wall.

- OVERHANGING EAVE: When the rafters project beyond the supporting wall, the projecting part is called an overhanging eave (e). The width of the overhanging eave is measured square to the wall.

- EAVE: This is the lowest part of the overhang or overhanging eave (point x).

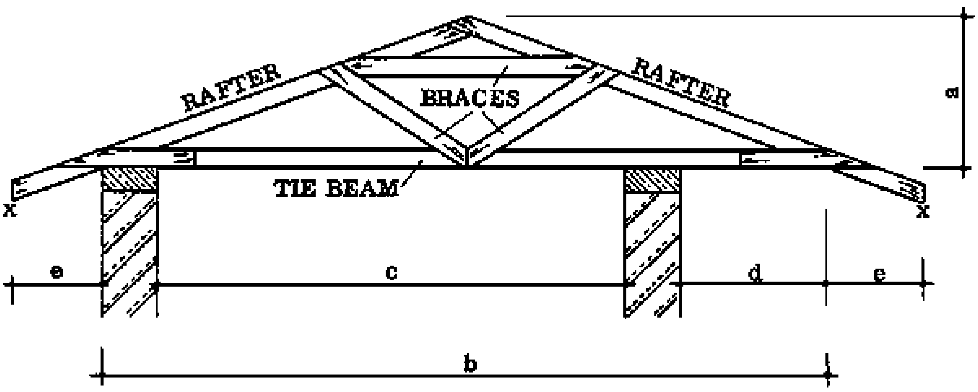

Fig. 1

NOTES:

LENGTHENING JOINTS FOR LIGHT-WEIGHT STRUCTURES

Always select the timbers before starting work on the roof construction. Keep the long straight pieces for the rafters, tie beams, and purlins; and the short pieces for braces.

Sometimes pieces of the right length may not be available. Then it may be necessary to join the members in order to make them longer.

All joints used for lengthening the members of the roof construction will be fish joints with one or two fish plates. These will be discussed in detail in the next section.

Keep in mind that each lengthening joint in the roof construction will weaken the roof. Therefore, try to select the timbers so that you don't need to use many lengthening joints.

Where to place a lengthening joint

It is often difficult to judge where to place a lengthening joint. In general, one can say that it should be as close as possible to a support such as a wall or pillar, but we must also keep in mind that the joint is weak, so it cannot be in a place where it is under strain.

For example: A 6 m long tie beam is needed. The only long piece of wood you have is 5,70 m long. If you join that to a 30 cm piece to make 6 m, then the joint will indeed be near a load-carrying wall - but in relation to the entire structure the joint will be in the wrong place, because most of the weight of the truss is concentrated in that area, where we now have a weak joint.

In this case, a better solution is to join two shorter pieces to get the required length.

Lengthening joints should also not be placed where the braces meet the member.

NOTES:

Fish joints

We have said that a fish joint will be sufficiently strong for most parts of the roof construction. However, when we assemble a fish joint, we have to follow certain guidelines to end up with a strong joint.

A fish joint will usually be assembled with nails. The strength of the nailed fish joint depends first on the number of nails used; and second on whether one or two fish plates are used. The length of the fish plates should be at least 5 times the width of the joined members.

ONE NAILED FISH PLATE

- SHEAR STRESS IN A JOINT WITH ONE FISH PLATE: If one nailed fish plate (Fig. 1) is used, the nails tend to shear off (break) at the joint line between the members and the fish plate because of the force exerted as the members try to move apart (Fig. 3). The joint is said to be in single shear (Fig. 2).

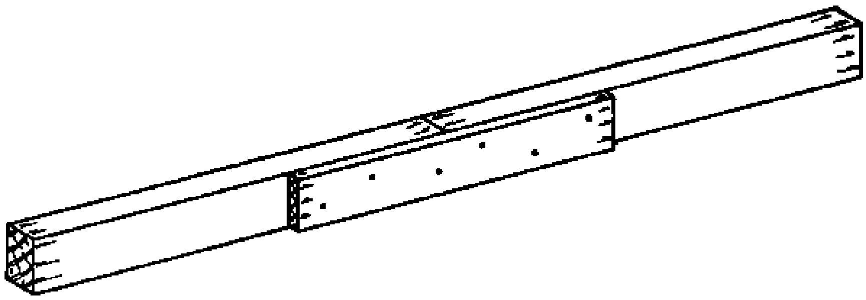

Fig. 1

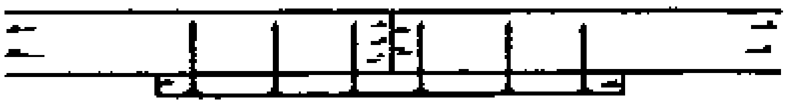

Fig. 2

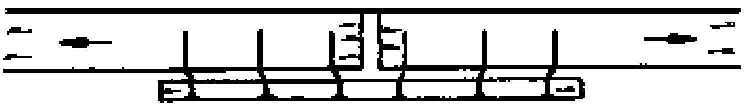

Fig. 3

In order to prevent the members from moving apart and shearing the nails, it is necessary to clinch the nails, so that they are anchored firmly (Fig. 4).

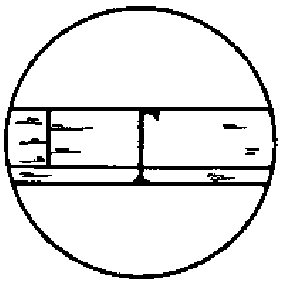

Fig. 4

TWO NAILED FISH PLATES

- SHEAR STRESS IN A JOINT WITH TWO FISH PLATES: When two nailed fish plates are used (Fig. 5) to join the members together, the nails tend to shear at two points. The joint is said to be in double shear (Fig. 6).

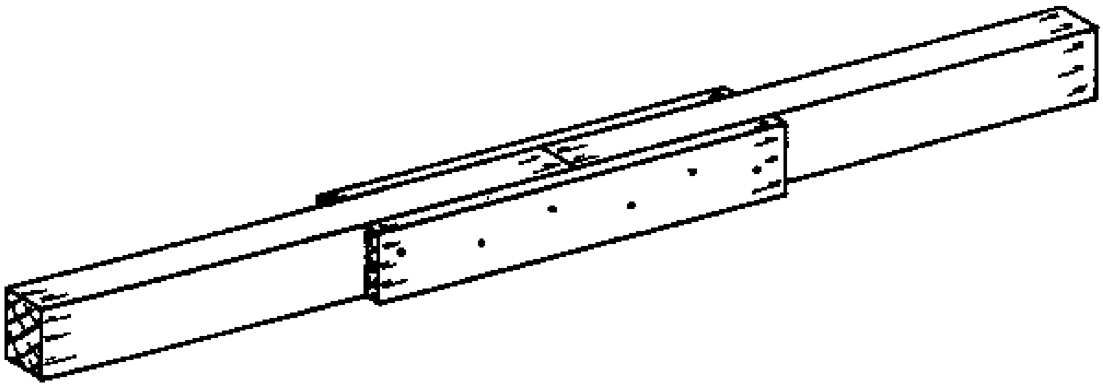

Fig. 5

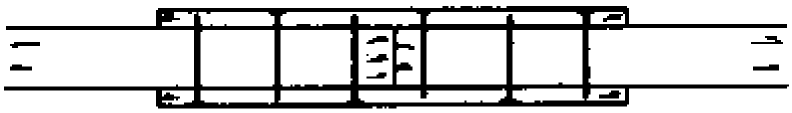

Fig. 6

In this joint there is less tendency for the members to pull apart, since there are two fish plates (Fig. 7). The nails must go through both fish plates.

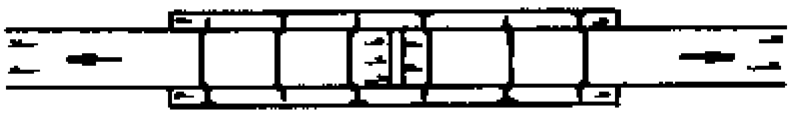

Fig. 7

- NOTE: The strength of a joint in double shear (with two fish plates) is approximately twice that of a similar joint in single shear (with one fish plate).

- NAILING THE FISH JOINT: We have seen that the strength of a nailed fish joint depends on the number of nails used in it and on the number of fish plates. It is important that the nails are fixed correctly, or the joint will be weakened.

- The nails should be evenly distributed over the entire fish plate.

- Nails should always be staggered.

- Nails should always be blunted.

- If thick nails are used, they have a tendency to split the wood. Often staggering and blunting cannot prevent this splitting. In this case it is necessary to drill holes for the nails. The holes should have a slightly smaller diameter than the nails.

There are certain rules for spacing the nails on the fish plate. These are:

- In the direction of the grain, the distance between the nails should be 10 times the thickness of the nail (Fig. 1, next page).

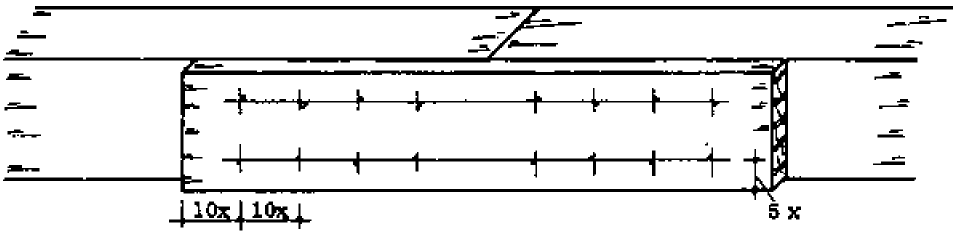

Fig. 1

- The distance to the margin of the fish plate should be: in the direction of the grain, 10 times the thickness of the nail; and across the grain it should be 5 times the thickness of the nail (Fig. 1).

- See the Reference Book, page 207, and Basic Knowledge, pages 92 to 94, for more details about nails and nailing.

Other lengthening joints

Other joints besides the butt joint with fish plates are sometimes used to lengthen the members of a roof construction. These joints require more work to make and they are not necessarily better than the ordinary fish joint. They are used only if extra strength is required.

These joints are:

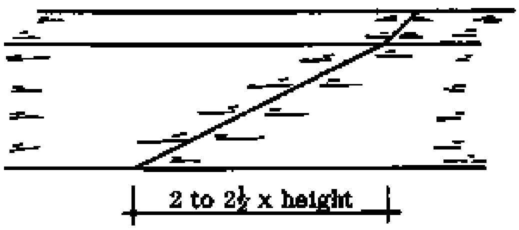

1. COMMON SCARF

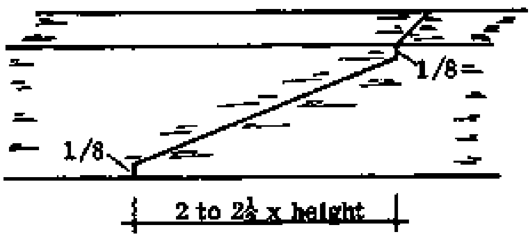

2. STOPPED SCARF

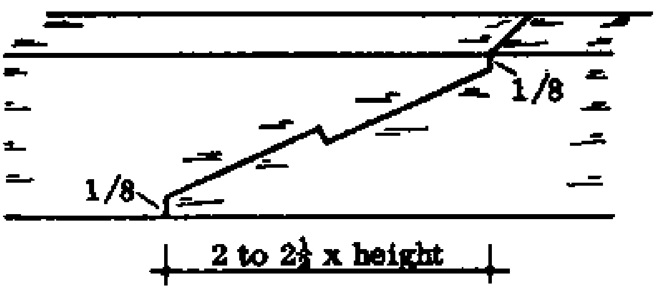

3. STOPPED HOCK SCARF

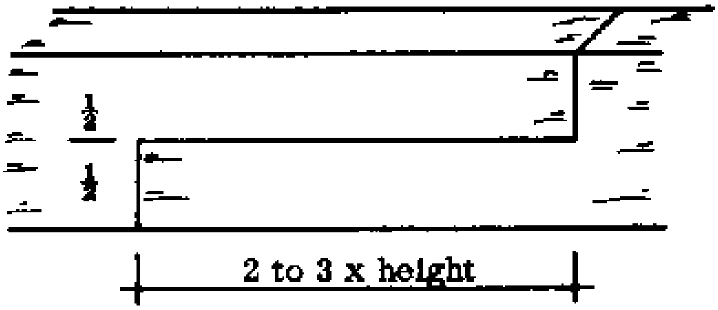

4. HALVING JOINT (if fish plates are used it is a "splice")

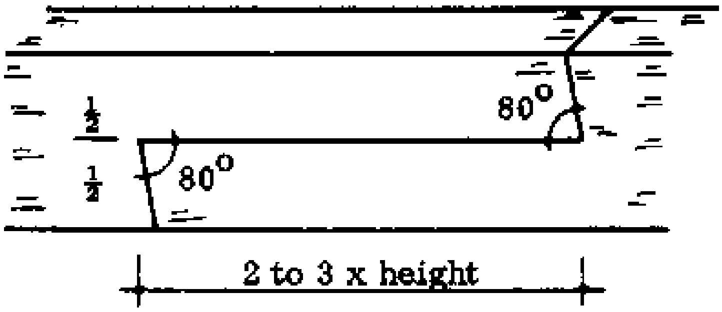

5. HALVING JOINT

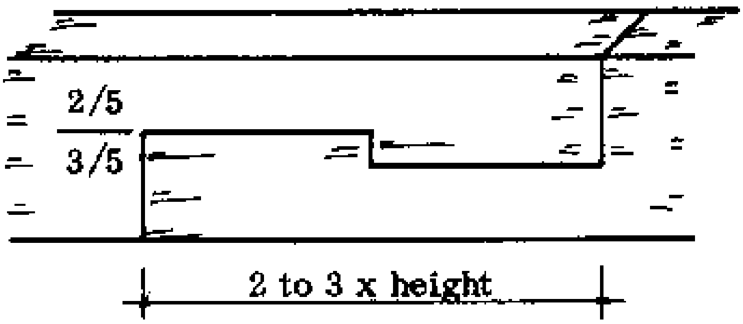

6. HOOK HALVING JOINT

Joints 1-6 are normally used for joining rafters, tie beams or purlins in the length. They can be used with one or two fish plates.

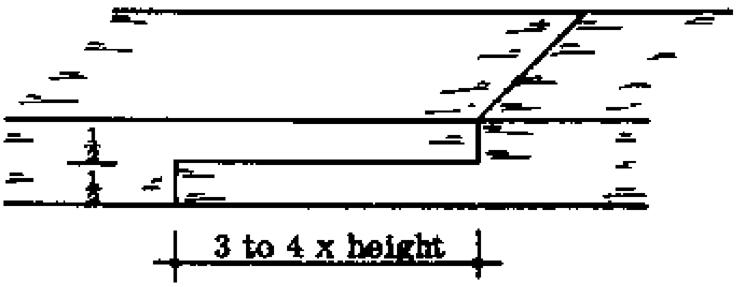

7. HALVING JOINT

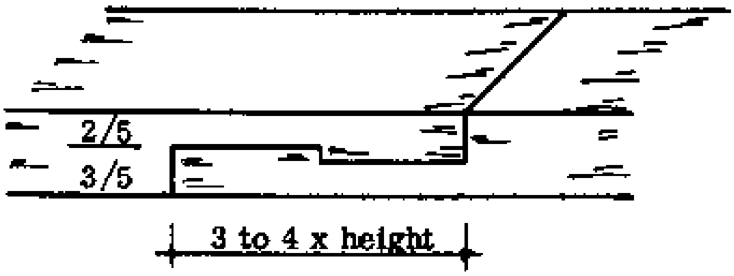

8. HOOK HALVING JOINT

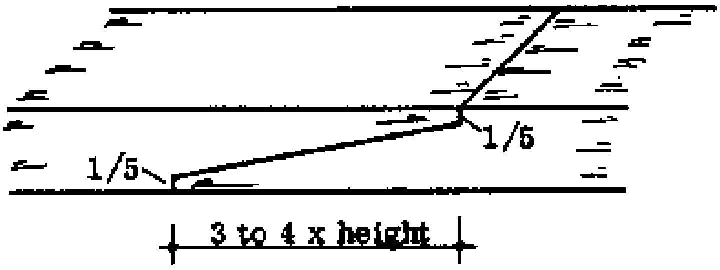

9. STOPPED SCARF

Joints 7-9 are used mostly for Joining wall plates in the length. The corner joint for a wall plate can also be a halving joint.

CONSTRUCTION DETAILS

Lean-to roof

A lean-to roof is a sloping roof attached to the wall of another building. It is "leaning" against the building. It is usually used for a small store or similar building which is attached to an existing building. The main members are: (Fig. 1)

- the wall plate (a)	5 x 10 to 15 cm
- the rafters (b)	5 x 7,5 to 10 cm
- the purlins (c)	5 x 7,5 cm
- the fascia board (d)	2,5 x 20 to 30 cm
- the sheet material (e)	

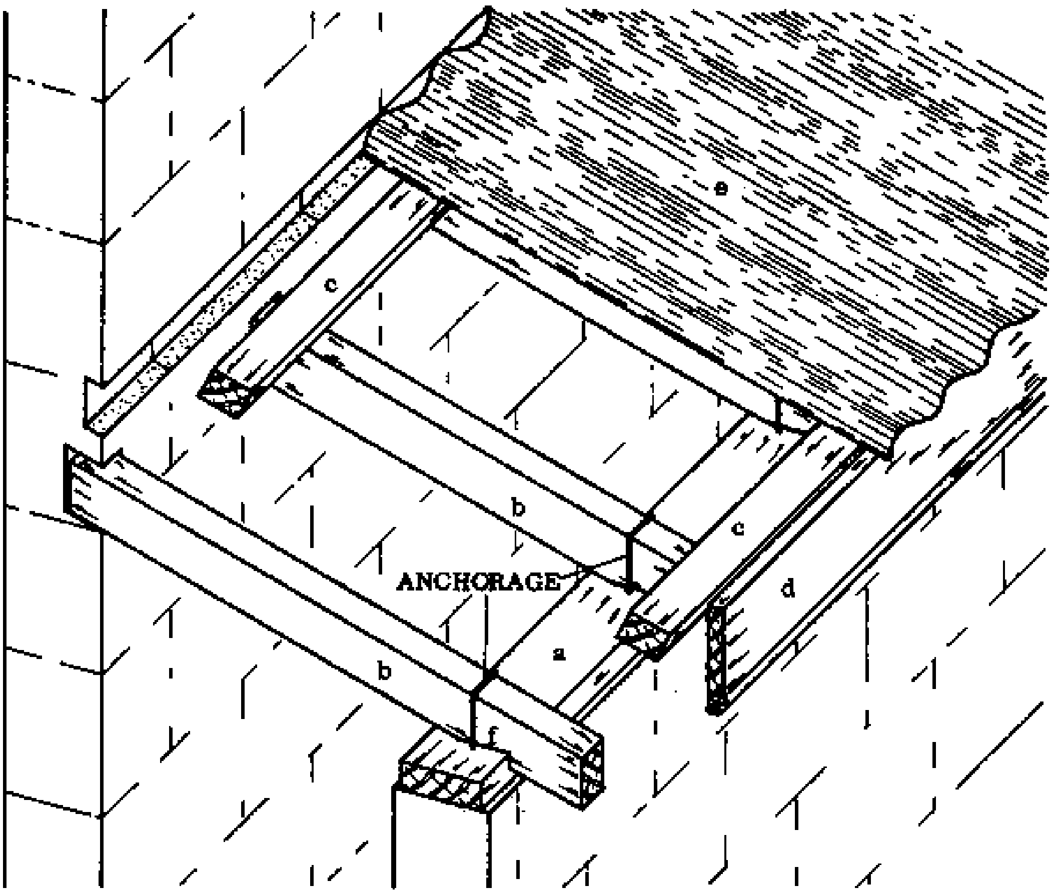

Fig. 1

The above measurements can be used as a guide in selecting timbers for this kind of roof.

Below are some rules for the construction.

- A good method for fixing rafters onto the main wall is to chisel holes in the wall into which the rafters can be fitted. The holes should be deep enough to ensure a safe rest for the rafters (Fig. 1).

- The lower part of the rafter should rest on a wall plate (a) or a concrete belt. The rafter and wall plate should be firmly anchored through at least 3 courses of blocks.

- The rafters should each be fitted with a “bird's mouth” near the end (f). The depth of the bird's mouth should be 1/5th of the width of the rafter. This is so that the rafters rest securely on the horizontal support.

- The purlins (c) should be well secured to the rafters.

- To prevent water from entering between the wall and the sheeting material, the part of the sheet which attaches to the main wall should fit into a recess in this wall, so that the ends of the sheets can be plastered over later (Fig. 1).

- In an open fronted structure, the roof is supported by pillars on the open side, instead of by a wall. The plate which rests on the pillars and supports the rafters is called the “eave plate” (Fig. 2, g). The size of the eave plate should be about 5 x 7,5 to 10 cm.

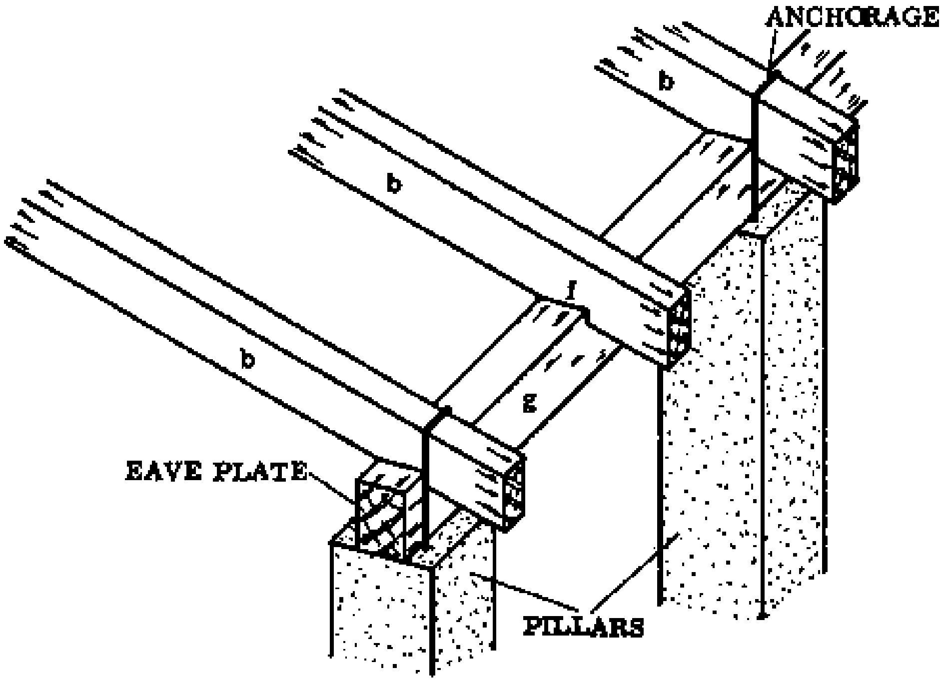

Fig. 2

- Remember that in an open construction the pillars must not only support the dead load of the roof construction, but also must be strongly anchored in the ground so they cannot be pulled out by a strong wind catching the roof from underneath.

- Note that in an open-fronted construction side walls are to be avoided. If they are required, there must be openings in them to permit wind to escape. A building with an open front should never face in the direction of the prevailing wind (the direction from which the wind usually comes).

NOTES:

Pent roof

A pent roof is a roof which slopes to one side. It differs from a lean-to roof in that it is not attached to the wall of another building, but is supported by its own walls.

In Rural Building, we deal with two types of pent roof: the ordinary pent roof and the enclosed or parapetted pent roof.

- ORDINARY PENT ROOF: In this roof, the rafters and purlins project beyond the outside walls and a fascia board is fixed all around the building. The pitch of this roof will usually be about 15 degrees. The main members are: (Fig. 1)

- the wall plate (a)	5 x 10 to 15 cm
- the rafters (b)	5 x 15 cm
- the purlins (c)	5 x 7,5 cm
- the fascia (d)	2,5 x 20 to 30 cm
- the sheet materials (e)	

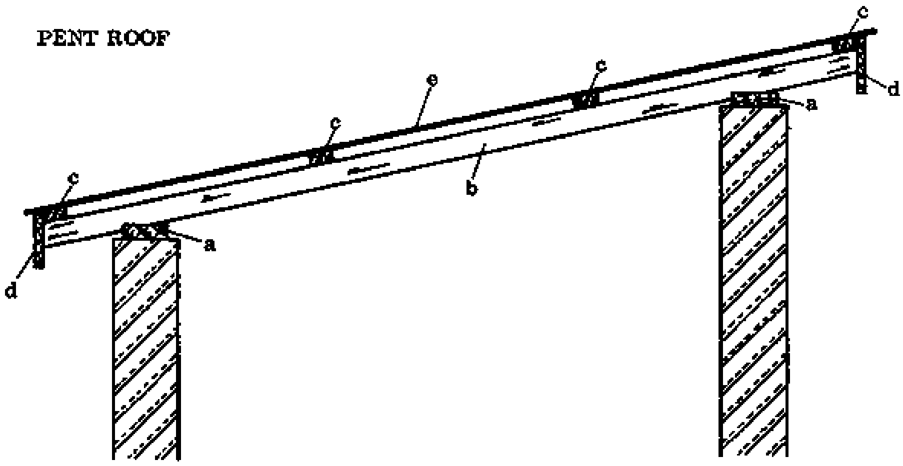

Fig. 1

The above timber measurements can be used as a guide in selecting the timbers for an ordinary pent roof; that is, a pent roof with a span of less than 3,5 m. The distance between rafters should be 1 to 2 m, and the distance between the purlins depends on the size of the sheet material.

There are certain rules for constructing this type of roof:

- The rafters should always be fitted with a bird's mouth so that they rest securely on the wall plate (Fig. 2).

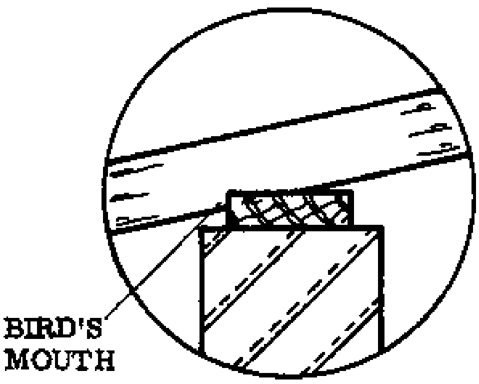

Fig. 2

- Wall plates, rafters, and purlins should be well anchored (see the section on anchorage which comes later in this book).

The pent roof is often used because it is cheaper to construct than other roofs, since only rafters and purlins are used, and no tie beam, braces, etc. are needed.

NOTES:

- ENCLOSED OR PARAPETTED PENT ROOF: In this roof, the higher wall and the two sloping walls enclose and protect three sides of the roof. The parts of the walls which project above roof level are called parapets. Parapets help to reduce suction on the roof and to keep the sheets in place. The pitch of this roof will be about 15 degrees (Fig. 1). The parts of the roof are:

- the wall plate or concrete belt (a)	
- the rafters (b)	5 x 7,5 cm
- the tie beam (c)	5 x 7,5 cm
- the braces (d)	2,5 x 7,5 cm
- the purlins (e)	5 x 7,5 cm
- the fascia (f)	2,5 x 20 to 30 cm
- the sheet material (g)	
- the parapet (h)	

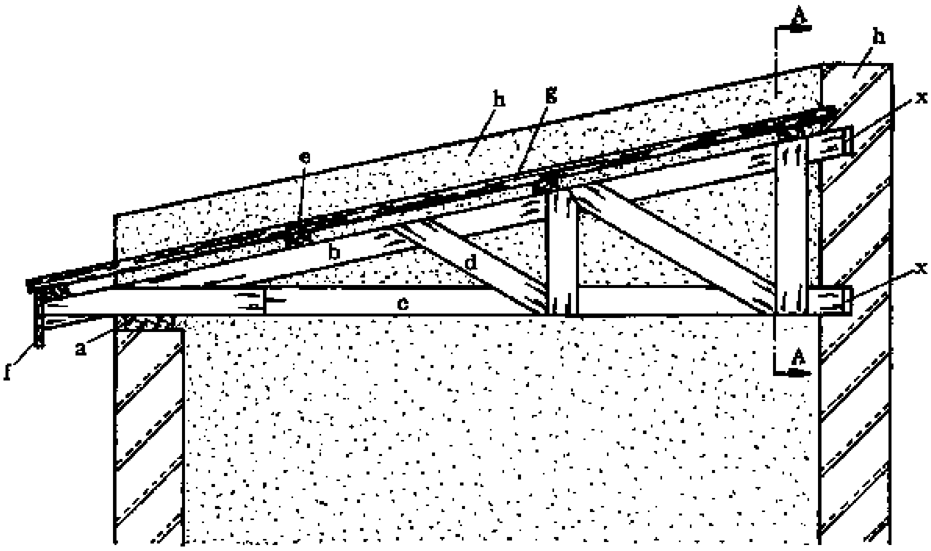

Fig. 1

The measurements above can be used as a guide for constructing this kind of roof. The distance between the rafters should be 1 to 2 m, and the distance between the purlins will depend on the size of the sheet material.

Keep in mind the following construction pointers:

- A built-up structure is used for this roof (a half truss). We will learn about how to make the truss in a later lesson.

- Before the half truss is erected, all the walls should be built to the level of the tie beam. The truss is then erected and the walling continued.

- There should be an expansion gap at the end of each rafter and tie beam (Fig. 1, x) where they fit into the wall; and at the ends of the purlins (Fig. 2, x). The gap prevents the wall from being cracked when the wooden member expands.

- The sheet material should be fixed so that about 1/3rd of a corrugation on each side of the roof is enclosed in the wall (Fig. 2). To keep water out, this edge should be pointing upwards (Fig. 2a).

- Leave about 10 cm space between the last truss and the wall so that there is enough space for plastering (Fig. 2, y).

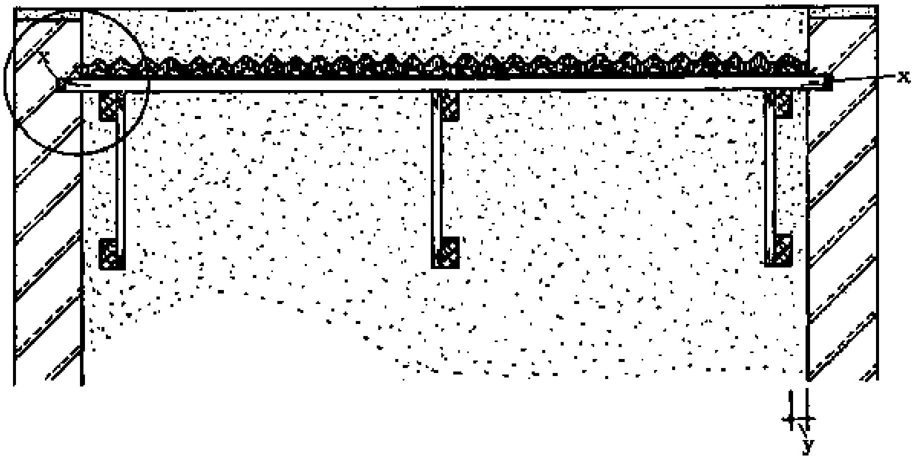

Fig. 2 CROSS SECTION A-A

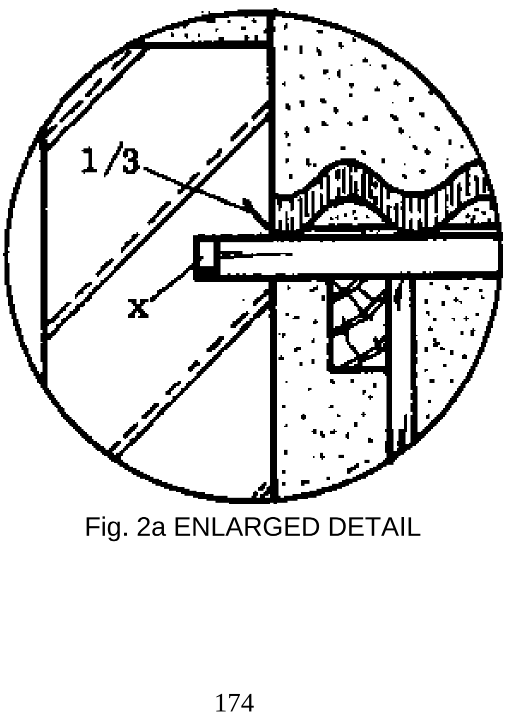

Fig. 2a ENLARGED DETAIL

NOTES:

Gable roof

This is a roof which slopes down on the two sides of the ridge and has a gable on one or two end walls. The gable is the triangular shaped part of the end wall where it comes up to the sloping edges of the roof.

The advantage of the gable roof over the pent roof is that it can be constructed to permit cross ventilation. It can be used for large or small spans.

In Rural Building, the kind of gable roof we make is constructed with built-up trusses. The main parts and members of the gable roof are (Fig. 1):

- the wall plate or concrete belt (a)
- the rafters (b) 5 x 7,5 cm
- the tie beam (c) 5 x 7,5 cm
- the braces (d) 2,5 x 7,5 cm
- the purlins (e) 5 x 7,5 cm
- the fascia (f) 2,5 x 20 to 30 cm
- the sheet materials (g)

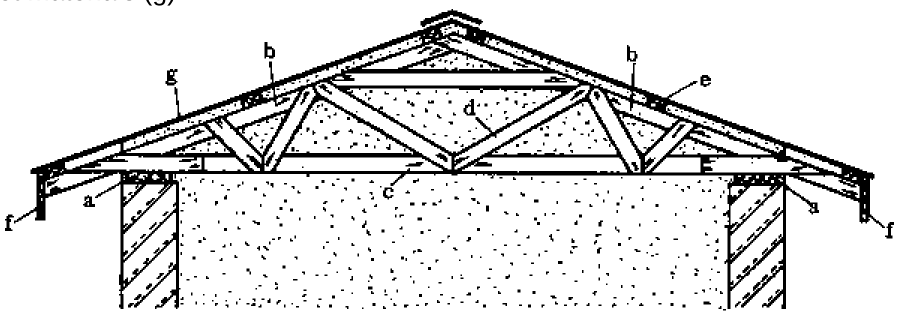

Fig. 1

The above measurements should be used as a guide when you make this type of roof. The distance between the trusses will be about 200 cm. The last truss should be close to the wall, except if parapets are used. In that case leave about 10 cm space for mortaring.

The gable ends can be constructed so that the purlins project beyond the gable and the fascia boards are nailed onto them. The end sheets should be nailed so that the last corrugation folds down over the top of the fascia.

Another way of constructing the gable is to put a parapet on top of the gable in the same way as for a parapetted pent roof. Again, the sheets should be enclosed in the parapet wall by about 1/3rd of a corrugation, with the edge pointed up.

The parapet can be on top of the gable wall only (Fig. 2), or the wall can project with the parapet beyond the ends of the sheets (Fig. 3).

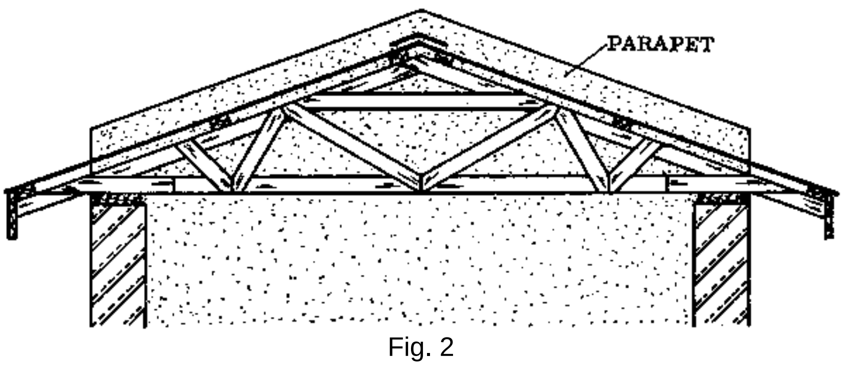

Fig. 2

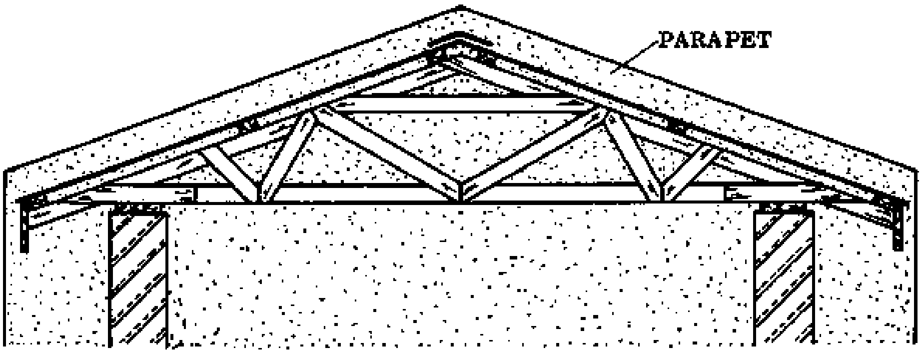

Fig. 3

NOTES:

Designing built-up trusses

Built-up trusses are used in gable roofs to support the purlins and the roof covering.

In constructing these trusses, we must remember the principle of “perfect structures” (see Light-Weight Structures), otherwise the roof construction may get distorted.

The following points will show why roof trusses are built up in the way they are.

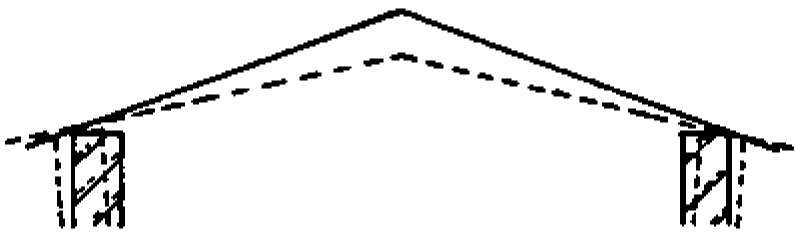

1. Figure 1 shows that a roof construction of only rafters tends to spread the walls. This is because the roof doesn't have a triangular shape, so it is not a perfect structure. This construction could cause damage to the walls, the roof, and the whole building.

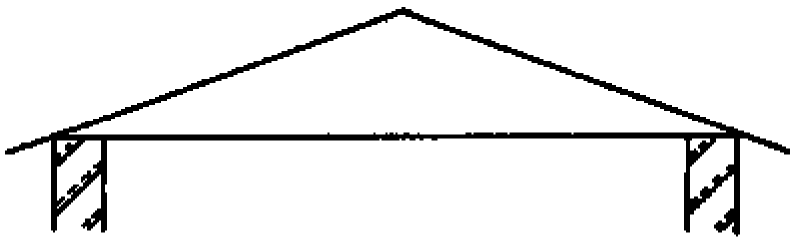

2. As we see in Fig. 2, as soon as a tie beam is introduced we get a triangular shaped, perfect roof structure.

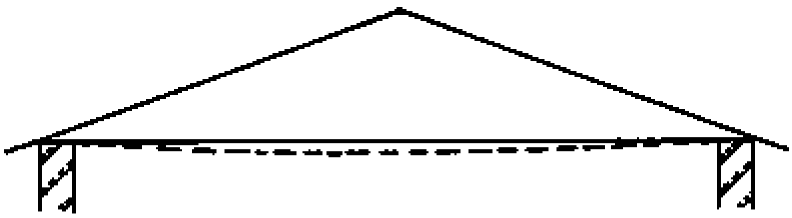

3. As the span of the roof increases the tie beam tends to sag.

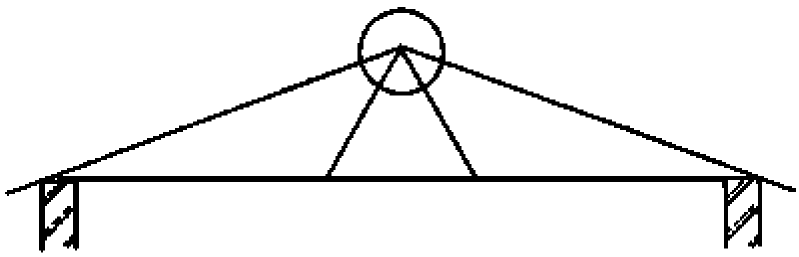

4. To prevent the sagging of the tie beam, braces are introduced. Because there are 4 members (2 rafters and 2 braces) that meet at the ridge, there is a danger of over-nailing the joint, which would weaken the truss. Therefore we need to find another way of fixing the braces while keeping a perfect structure.

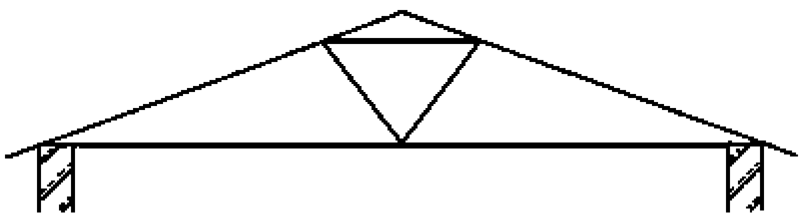

5. This is a possible solution to prevent overnailing.

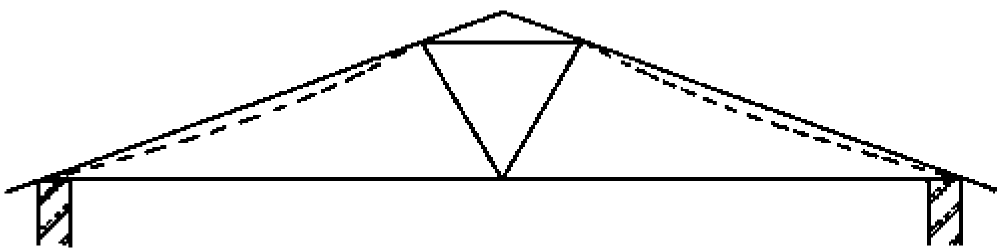

6. As the span increases still further the rafters will also be longer and they will tend to bend.

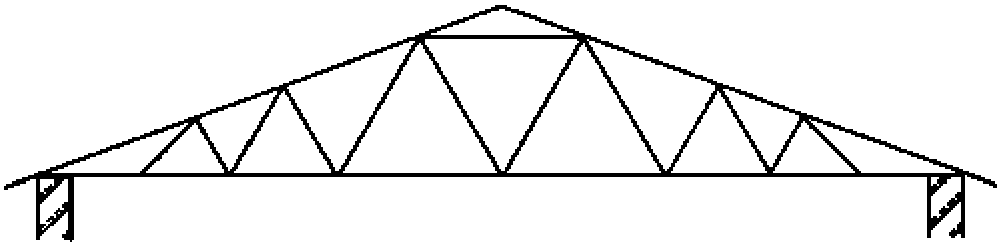

7. To prevent the rafters from bending, more braces are introduced.

Joints for the truss

At the ridge, two rafters must be joined together. This is done with a halving joint (Fig. 1).

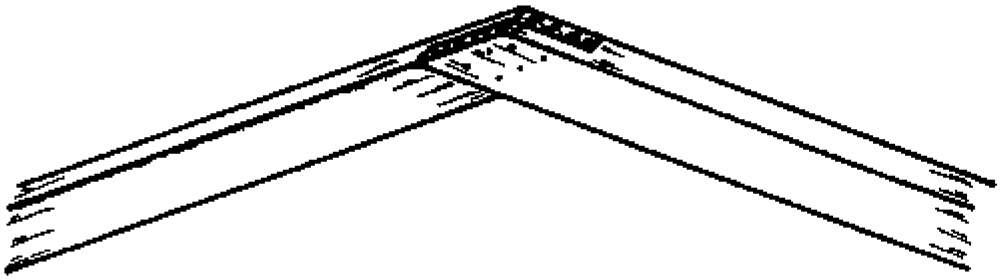

Fig. 1

The halving joint is assembled with a few long nails. They should be long enough that they can be clenched on the opposite side. Take care not to overnail the joint.

The rafter - tie beam joint can be a fish joint with two nailed fish plates (Fig. 2). After the fish plates are fixed, they must be cut so that they don't project past the edge of the rafter.

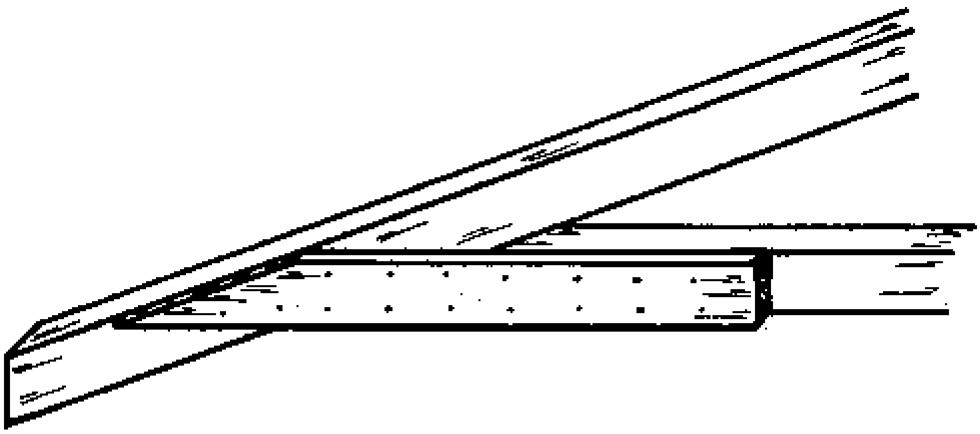

Fig. 2

If large trusses are made, short braces can be used to strengthen the joint instead of fish plates (Fig. 3).

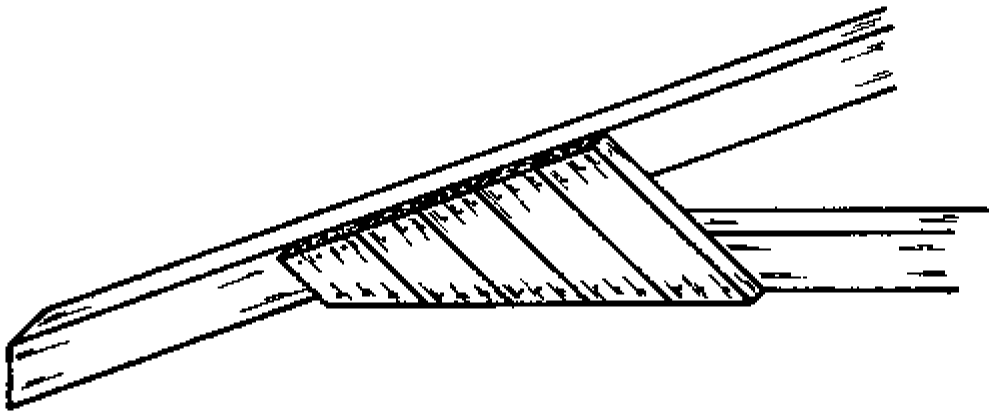

Fig. 3

The braces are added according to the required pattern of the truss. At the place where the two braces meet, they should be cut so that the areas where they are nailed to the truss (areas a and b) are as large as possible and of equal size on both braces (Fig. 4).

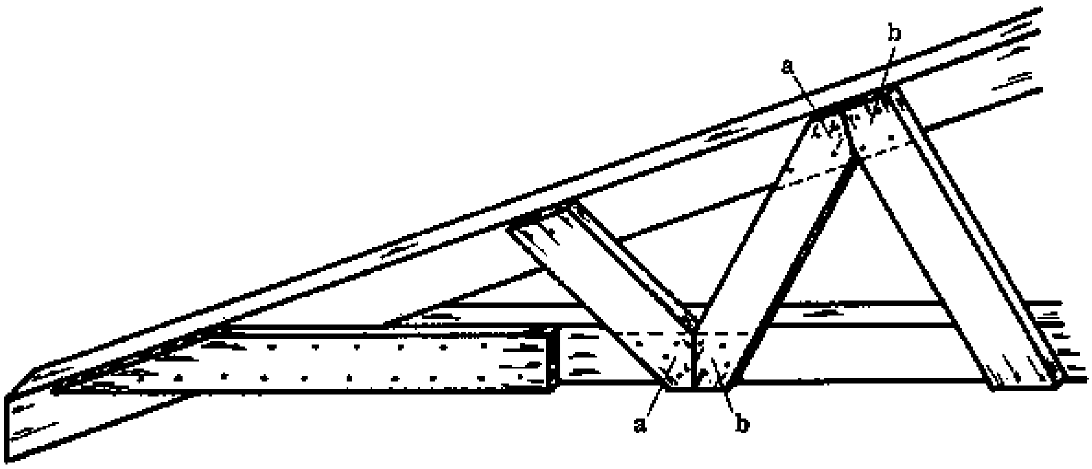

Fig. 4

This is done by placing them on top of each other, marking and cutting during the assembly of the truss.

All of these reinforcements can be added on either one or both sides of the truss, depending on the strength that is needed for the construction.

NOTES:

Marking out built-up trusses

Before you start to mark out the trusses, measure the span of the building at several points and find out the span of the truss. Make sure that the truss is long enough to cross even the widest span of the building.

Do not forget the difference between the span of the building and the span of the truss. You must take into account any verandahs or overhangs in the span of the truss. The outline design will help you to find out the different spans for the building and the truss.

The marking out is done in a cleared, flat area of the building site. After the area is cleared, the shape of the trusses is laid out with iron pins knocked in the ground and with the mason line.

- SEQUENCE OF OPERATIONS:

a. Place pegs 1 and 2 at a distance equal to the span of the truss, and stretch a line between them.

b. Divide the distance from point 1 to point 2 in half, and mark point 3.

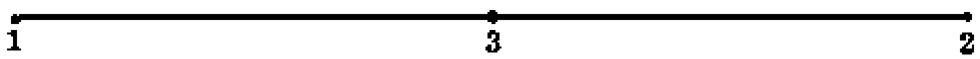

c. From point 3, erect a line perpendicular to line 1-2 (use a large square or the 3-4-5 method).

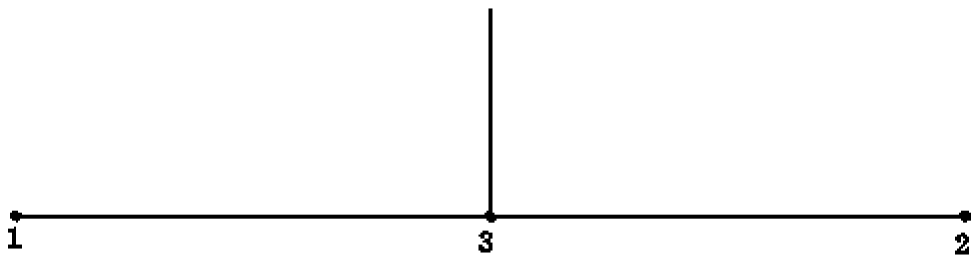

d. Place peg 4 along the line from point 3, at the distance of the required rise of the truss.

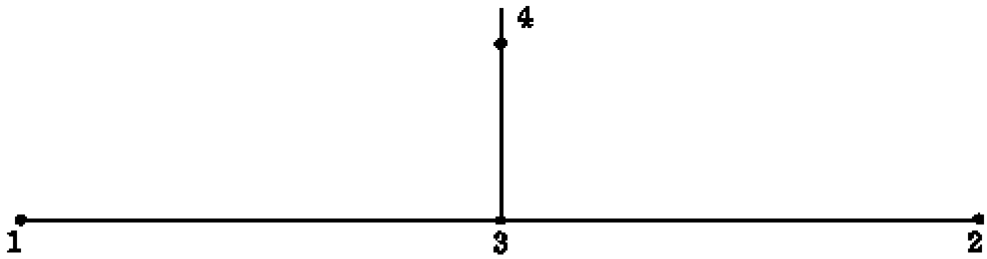

e. Check that the distances 1-4 and 2-4 are equal.

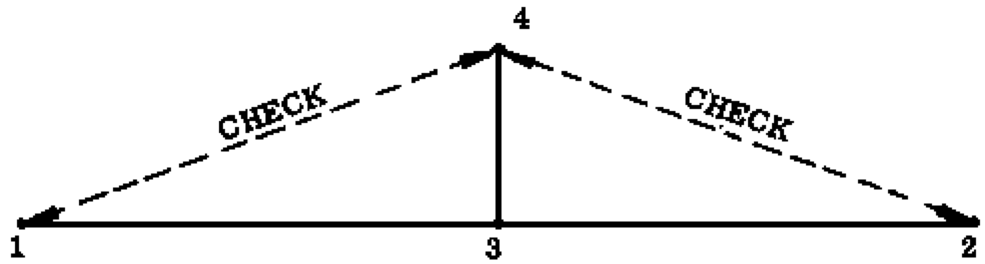

f. Check that the roofing sheets will fit as planned, including a sufficient over lap. Check this by measuring from peg 1 to peg 4, then add the overhang and the projection of the fascia board.

NOTES:

Assembly of built-up trusses

Before you assemble the truss select the timbers, measure them against the setting out, and if necessary join pieces to get members with the required lengths (see Lengthening Joints, pages 169 to 173).

- SEQUENCE OF OPERATIONS:

a. Lay the tie beam along the line from peg 1 to peg 2.

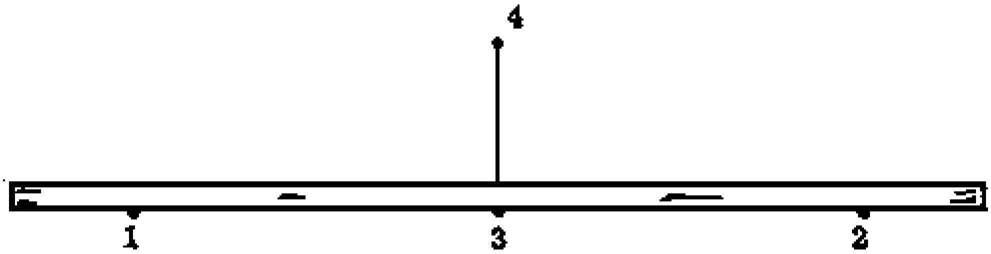

b. Place the two rafters between pegs 1 and 4; and between pegs 2 and 4. Note the positions of pegs 1, 2 and 4 with respect to the boards. This is very important. Rafters should be slightly longer than needed. This allowance is cut off after the trusses are erected.

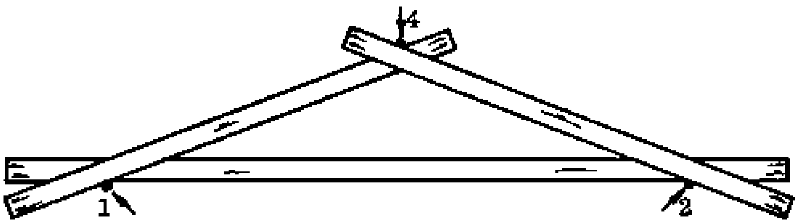

c. Mark the halving joint on the rafters at the ridge and cut it.

d. Mark the cutting lines on the tie beam and cut the ends.

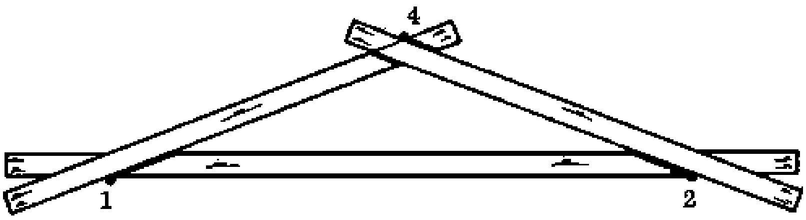

e. Assemble the ridge joint with a few nails; and the rafter to tie beam joint with fish plates.

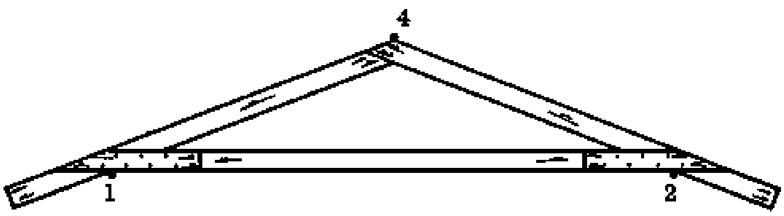

f. Mark the positions of the braces according to the plan, on the rafters and tie beam.

g. Lay the braces one over another on top of the tie beam and rafters. Use a single nail to fix them temporarily.

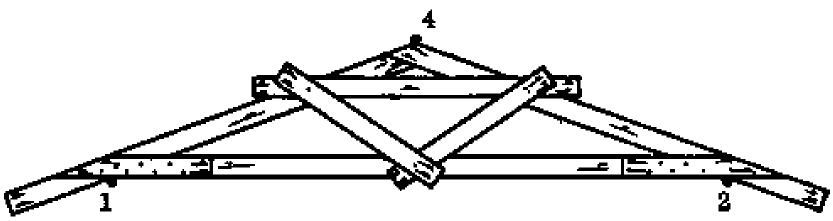

h. Cut the braces to the correct shape, keeping in mind that the size of the area where each is nailed to the truss must be the same for all of them (arrows).

i. Fix the braces with nails.

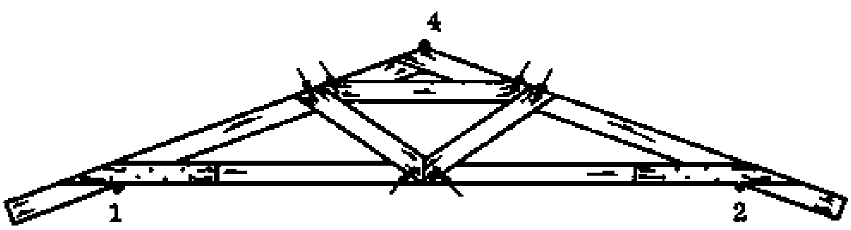

j. After the braces are fixed, if necessary a second fish plate can be fixed on the other side of the rafter-tie beam joint. Turn the truss over and fix this plate. Sometimes it is also necessary to fix braces on both sides.

k. Mark the positions of the purlins on the rafters. This will make work easier later on.

l. The other trusses can be assembled on top of the finished first truss.

- NOTE: Always use dovetail nailing, throughout the truss.

NOTES:

Erecting a roof structure for a gable roof

As soon as the trusses are finished, the roof can be erected. If wood preservatives are used they should be applied before the truss is erected. Creosote is often used as a preservative for trusses. If the roof will not be erected immediately, keep the trusses dry and in a shady place.

- SEQUENCE OF OPERATIONS:

a. Hang a truss upside-down across the span of the building, at each gable end (Fig. 1).

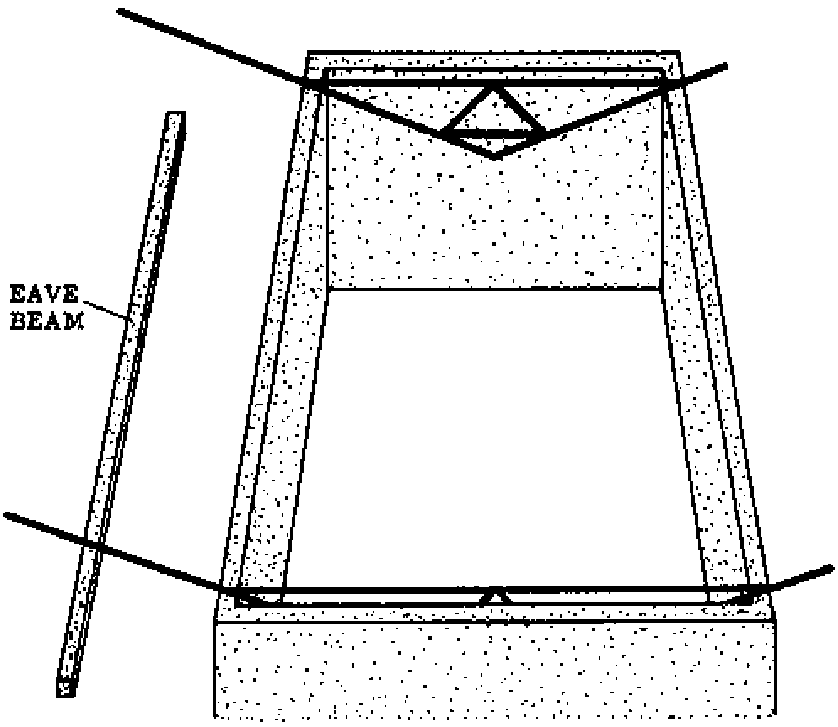

Fig. 1

b. Turn the trusses over and plumb them (Fig. 2).

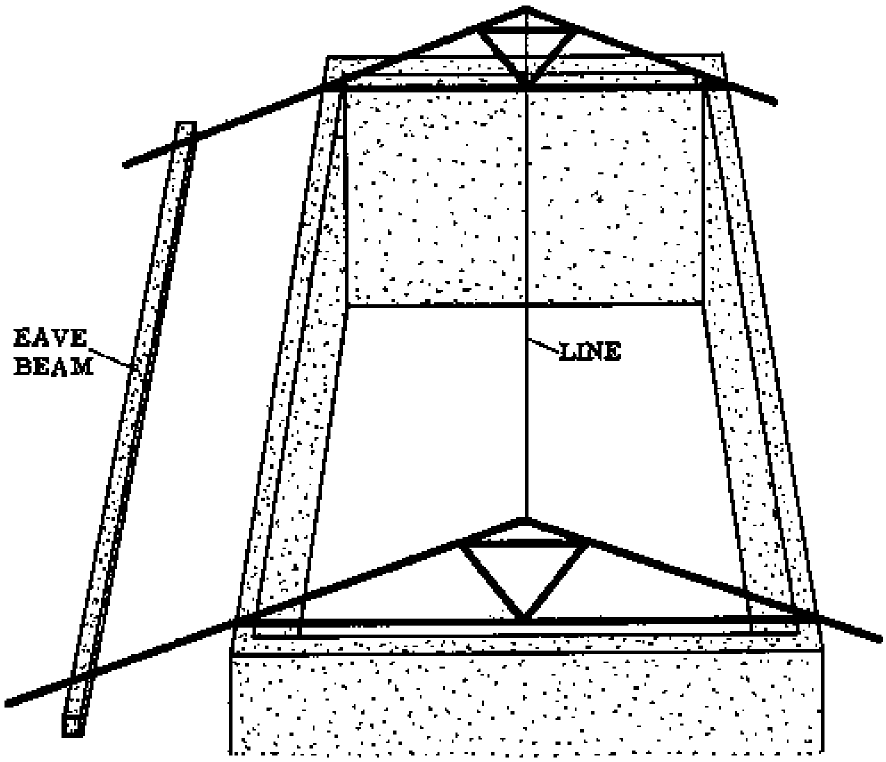

Fig. 2

c. Secure the trusses at the bottom with anchor rods and brace them temporarily from the rafter to the wall plate.

d. Fix a line from one ridge to the other (Fig. 2).

e. Hang the other trusses, one after the other, upside-down between the walls. Turn each one over and plumb it according to the line before hanging the next one. Brace them temporarily.

f. Nail the purlins according to the measurements of the roof covering (the sheets) and secure them (a section on Anchorage is included later in this book). If the rafters overhang to cover a verandah, make sure that the eave plate is also well secured.

g. Fix a line at the bottom end of the rafters, on the gable ends of the roof, at the level of the required overhang. Cut off the ends of the rafters according to the line.

h. Cut off the purlins to the correct length.

i. Build up the gables.

j. Nail the fascia boards on the purlins and rafter ends.

Once the roof structure is erected, cover it as soon as possible to keep out the sun and rain; otherwise the wood may start to twist and the joints will loosen. If the trusses rest on a concrete belt, put roofing felt between the concrete belt and the tie beam to help prevent dampness.

NOTES:

Purlins

The function of the purlins is to support the roofing sheets and to stiffen the whole roof structure. They are supported by the trusses and sometimes the gable ends. The lengthening joints for purlins can be fish joints.

The size of the purlins should be 5 by 7,5 cm.

The lowest purlin of the construction is called the eave purlin (Fig. 1). The highest one is called the ridge purlin.

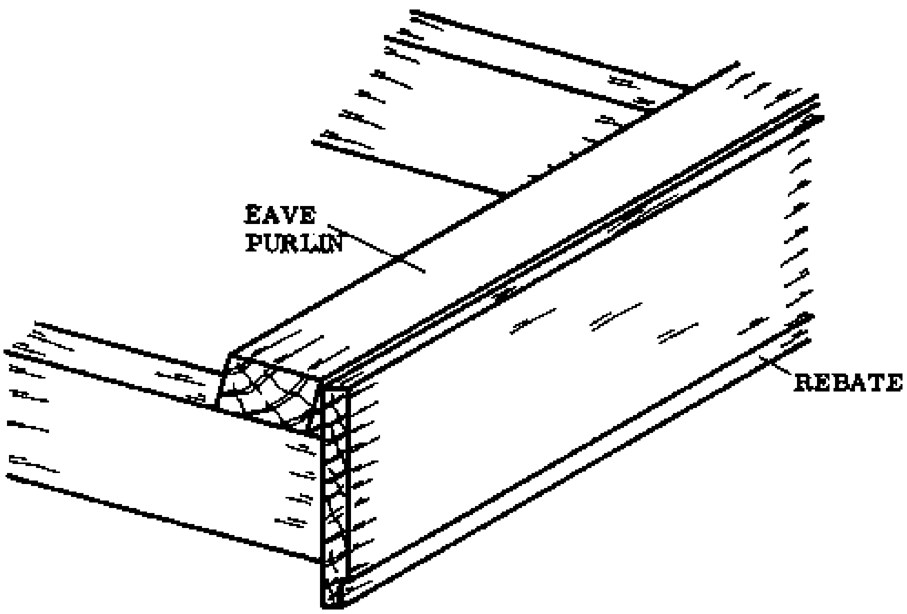

Fig. 1

To make a wider area for nailing the sheets, lay the purlins flat on the rafters. If larger distances must be bridged, lay the purlins on edge. This reduces the nailing area, but it prevents the purlins from sagging.

The distance between the purlins depends on the size and type of sheets which are used for the roof covering. If thick sheets with the normal 244 cm length are used, then one purlin at each end of the sheet plus one in the middle will be sufficient. For very thin sheets one extra purlin should be added for each sheet.

If the building will require more than 2 sheets to cover the length of the rafter, be careful that the purlins are set at the correct distance apart.

It makes work much easier if you mark the positions of the purlins on the rafters as you assemble the trusses.

Fascia boards

Fascia boards are often added to the roof construction. They are wide boards which are fixed on the rafter ends and the purlin ends at the gables of the roof construction.

Fascia boards are about 20 to 30 cm wide and 2,5 cm thick. A small rebate can be made into the lower edge of the board to give it a better appearance (Fig. 1).

If the rafter projects below the fascia it can be cut off as shown in Fig. 2.

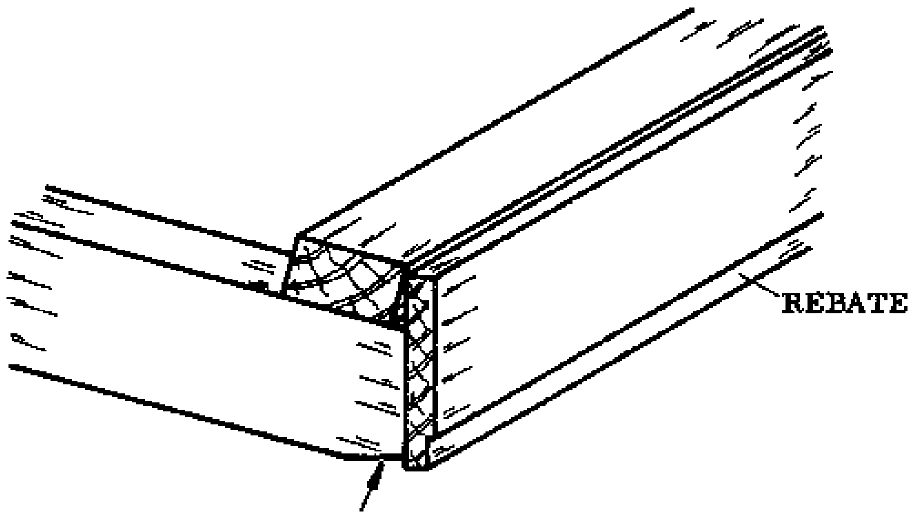

Fig. 2

The eave purlin should be at the correct height so that it does not interfere with the fascia. The fascia boards are fixed before the sheets are laid.

A butt joint is sufficiently strong to use for lengthening the fascia boards, if a fish plate is nailed behind it for strength (Fig. 3). The corner joints should all be mitre joints so that the end grain of the boards is not exposed (Fig. 4).

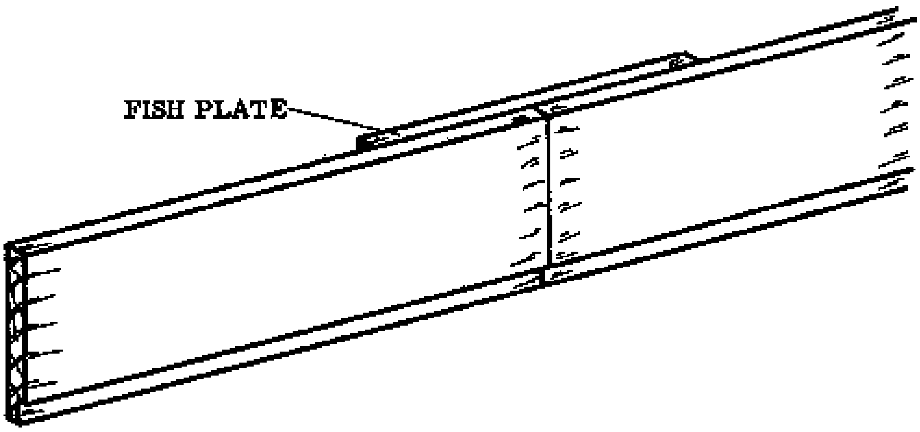

Fig. 3

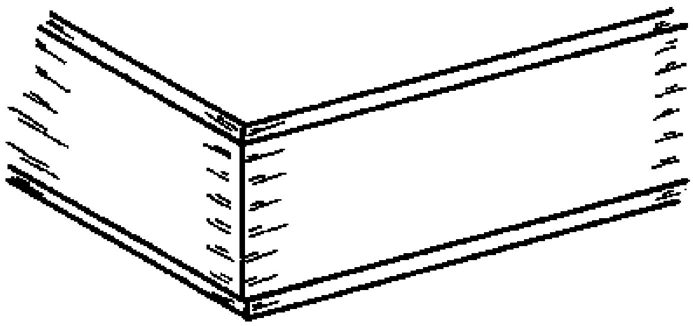

Fig. 4

Before the boards are fixed they should be painted, since it will be difficult to reach some parts later, especially the top edge. Pay special attention to the places where they are joined together. The end grain should be soaked with paint to prevent water from entering there.

Verandahs

When a building with a gable or pent roof has a verandah, there are two possible methods for constructing a roof to cover it:

- By extending the tie beams to cover the verandah (Fig. 1)

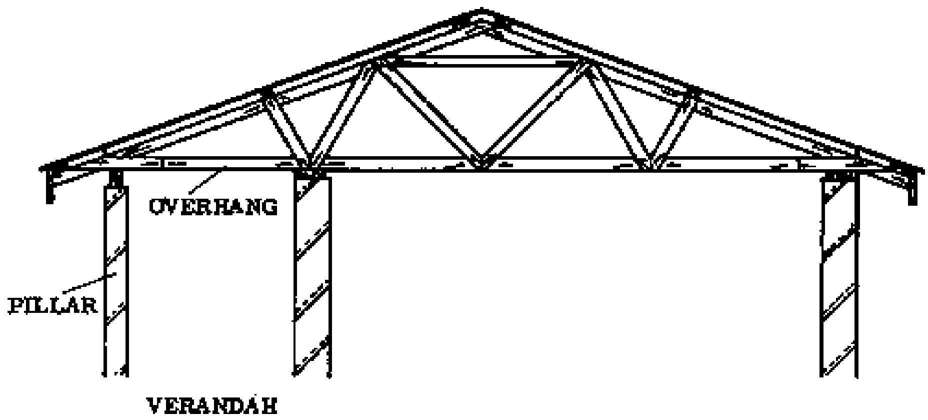

Fig. 1 EXTENDING THE TIE BEAMS

- By extending the rafters to cover the verandah (Fig. 2).

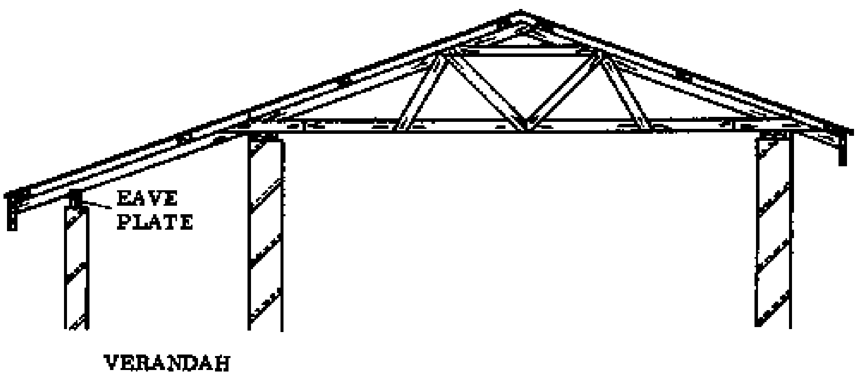

Fig. 2 EXTENDING THE RAFTERS

- REMEMBER: Open verandahs should not face the direction of the strongest winds.

- EXTENDING THE TIE BEAMS: The part of the tie beam that covers the verandah is called the overhang (Fig. 1). For a small overhang, supporting pillars are not necessary, but it should be braced very well. If the overhang is wide, then pillars are needed to support it (Fig. 1).

If the building has a gable roof, an ordinary truss construction can be used, with the span of the truss including the width of the verandah.

Since the parapetted pent roof has a half truss construction with a tie beam, this construction may also be used with it.

- EXTENDING THE RAFTERS: The overhanging rafters cover the verandah. Note that the building must be high enough so that the lower edge of the verandah is not inconveniently low (Fig. 2). This construction can be used with either an ordinary pent roof or a parapetted pent roof as well as with a gable roof.

The feet of the rafters are supported by an eave plate or a concrete eave beam which rests on pillars. The joint between the rafters and the eave plate should be a bird's mouth to ensure proper support for the rafters. The depth of the bird's mouth should be about 1/5th of the width of the rafter.

The eave plate is normally set edgewise on the pillars. In most cases 5 x 10 Odum is large enough for the eave plate. Take care that it is well anchored on the pillars.

There are certain lengthening joints which are often used for joining eave plates. These are described in the chapter on “Lengthening Joints”.

The pillars themselves have to be well anchored in the ground, since they not only have to carry the weight of the structure but also have to hold the roof down in heavy storms (see Lean-to Roofs).

At times the builder may choose to construct the verandah roof using a combination of projecting rafters and projecting tie beams.

Anchorage

Whatever the form of the roof construction, it must be tied securely to its supporting walls or pillars. If this is neglected, the roof can easily be damaged or even torn off in strong winds.

The following are some points which are important in anchoring a roof.

- ANCHORAGE RODS: The roof is secured to the walls by these iron rods. They can be fixed in the wall during the wall construction if the positions of the trusses have been decided, or else they can be fixed in the finished wall.

- In the first method, the rod is inserted in the bed joint as the third course be low the top of the wall is laid. The rod is bent at a right angle so it can fit into the cross joint (Fig. 1); and it is positioned just inside the face of the wall.

When the next course is laid, the block above is chiselled out to make a shallow groove (approximately 1 cm deep) for the rod (Fig. 1).

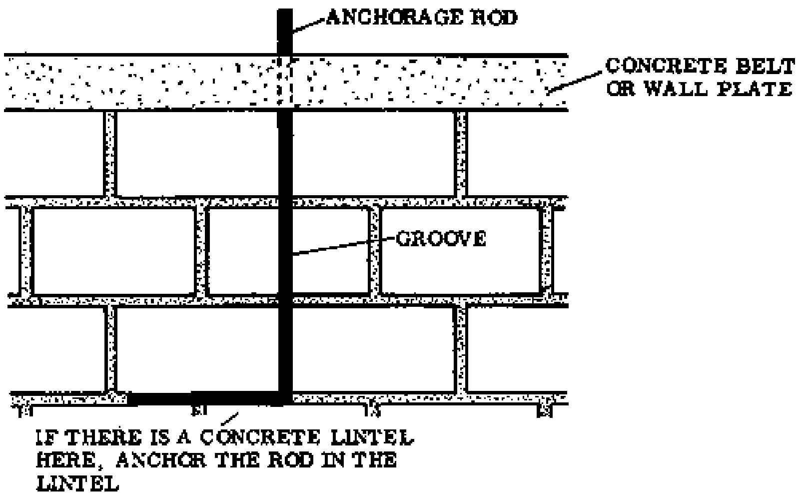

Fig. 1

The rod fits into the next cross joint and is bent gradually inwards toward the top centre of the wall, coming out where it can pass later through the wallplate or concrete belt (Figs. 1 & 2).

When the truss is erected, the rod is bent around the rafter and tie beam both, and secured with nails (Fig. 2).

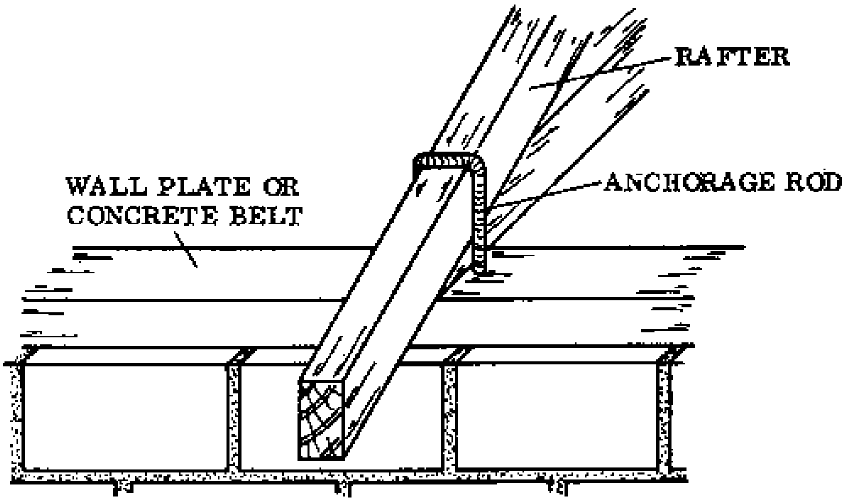

Fig. 2

- With the second method, the rod is inserted through a hole chiselled in the bed joint of the third course from the top, after the wall is complete. The ends of the rod are bent up and over the tie beam and rafter, overlap each other, and are secured on both sides with nails (Fig. 3).

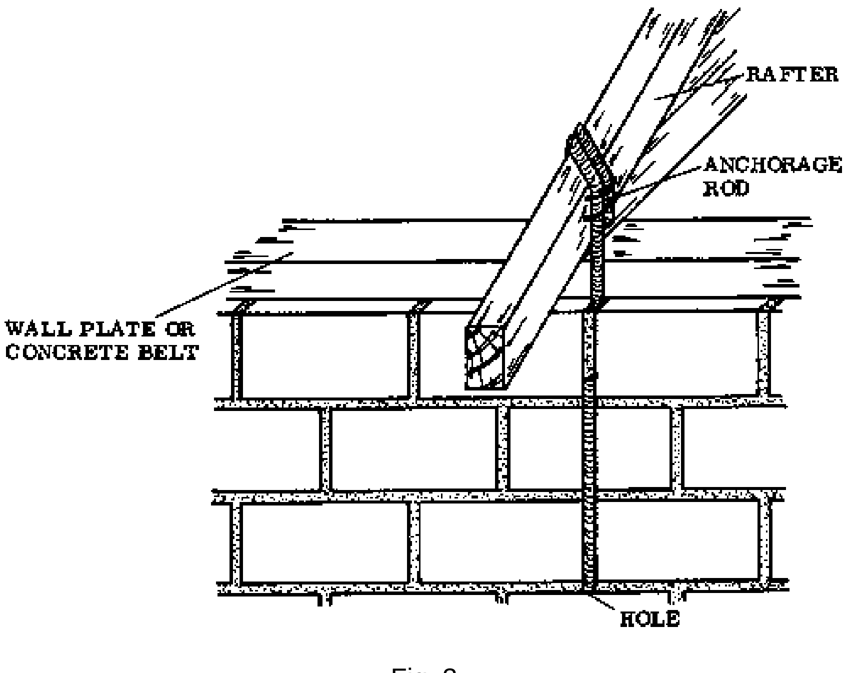

Fig. 3

The second method is chiefly used when the roof of an existing building has to be secured. If you are constructing a whole new building, it is best to plan ahead a bit and use the first method, which is both easier and stronger.

- ANCHOR BEAM: Once the wall is completed, the top of the wall may be covered with a strip of reinforced concrete all around the outside walls of the building. This is the anchor beam, also known as the ring beam or concrete belt. The roof anchorage passes through this belt. The anchor beam performs three functions:

- It keeps the outside walls of the house together, thus strengthening them.

- It provides a firm base for the trusses and distributes their weight over the softer landcrete blocks below.

- It anchors the trusses and adds weight to help keep the roof construction from being lifted up in heavy winds.

- WALL PLATE: For smaller spans the Rural Builder can install a wooden wall plate instead of an anchor beam. The roof anchorage passes through the wall plate and through at least three courses of blocks.

There are several joints that may be used to connect pieces lengthwise to make the wall plate (see Lengthening Joints, page 173). The wall plate should be about 5 cm thick by 15 cm wide.

- TRUSSES: The trusses should be evenly spaced across the roof, with one at each gable end and the rest about 2 m apart from each other. Every truss should be anchored to both the walls that it rests upon. The anchorage rod is bent around both the tie beam and the rafter, and secured with nails (Fig. 2, previous page).

- PURLINS: Tie all the purlins to every rafter, preferably with iron rods. These are shaped as shown in Fig. 1, by hammering the rod flat on both ends and drilling holes in the ends, then bending the rod to a U-shape.

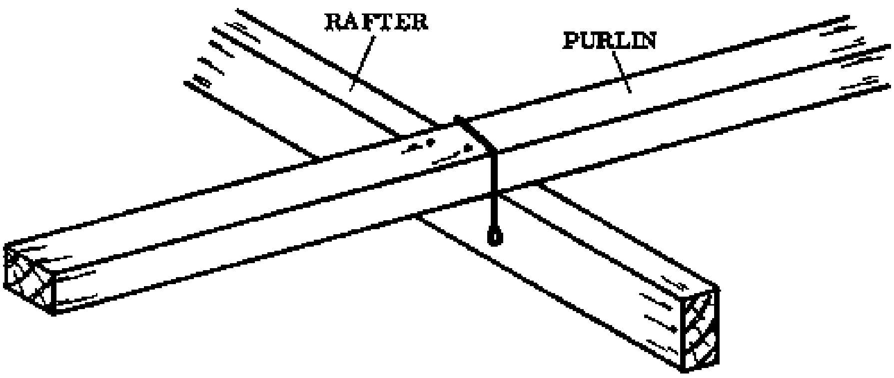

Fig. 1

If these fixings can't be made, it is possible to make wooden fixings (Fig. 2). Two wooden pieces are used, one on either side of the purlin.

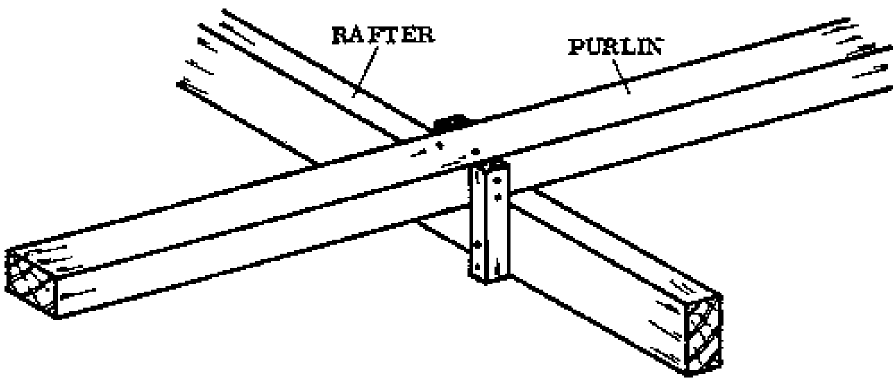

Fig. 2

Barbed wire can also be used as an alternative to the iron rods. Wrap it firmly around and nail it securely.

Whatever fixing you use, take care to fix the nails so they are not pulled out by the force of the wind on the roof. Fig. 3 shows two badly nailed fixings.

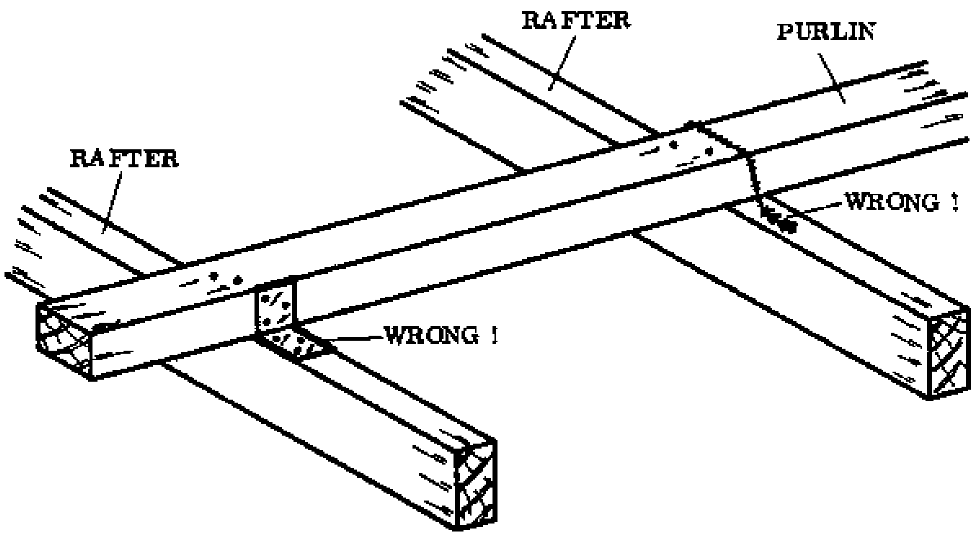

Fig. 3

NOTES:

ROOF COVERING

See the Reference Book, pages 207, 230 and 231 for descriptions of the sheet materials and roofing accessories; also see pages 239 and 240, Tables of Figures.

Alignment of the sheets

If possible, always start laying the sheets from one end of the roof so that the free ends of the sheets face away from the direction of the wind. This reduces the danger of the sheets being blown away as they are being installed.

Start laying from one end of the building to the other. As each new sheet is laid, lift the edge of the previous one so that it overlaps the new sheet by 2 corrugations. Each sheet is thus held in position by the one previously fixed, so they are more easily aligned in the correct position.

Exact sidelaps (2 corrugations) and endlaps (15 cm) are essential to make the roof waterproof.

- NAILING: When you nail corrugated roofing sheets to purlins, always nail through the top of the corrugation. This is so that rain will tend to run away from the nail (Fig. 1).

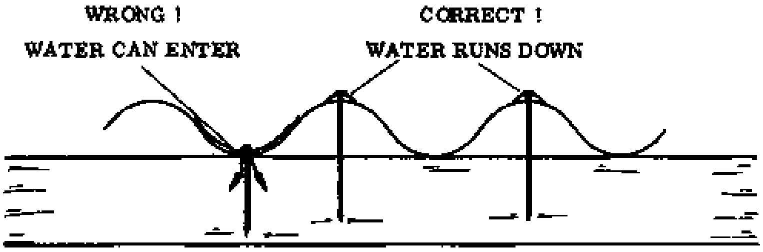

Fig. 1

Each nail should be driven in until the roofing felt just touches the sheet. If it is driven further, the nail will flatten the corrugation and distort the sheet. This can cause the roof to leak.

The sheets should be nailed to all the purlins. Nail every second corrugation in the sheets along the eave purlin and along the ridge purlin; and also on the end sheets at the gables. Over the rest of the roof, nail at every third corrugation over the purlins (Fig. 2).

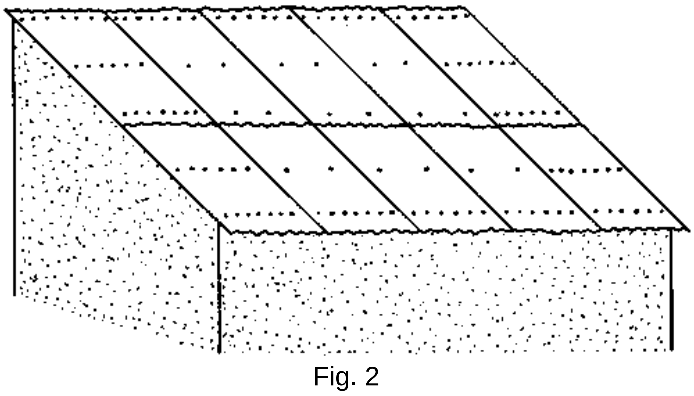

Fig. 2

- HOW TO LAY THE SHEETS: Before the sheets can be laid, the gables must be built up to the correct height. Make sure that all the nail heads of the wooden construction are punched well below the surface.

Fix a line on the eave to indicate the desired projection of the sheets. Note that the sheets should project about 2 cm over the fascia board in order to provide a drip overhang.

It helps to station a helper at eave level to observe if the general line of the sheets is straight and that they project uniformly. Another helper can check that the sheets are straight along the corrugations from the eave to the ridge.

The helpers can also check from both sides of the roof to see if the corrugations match at the ridge line (Fig. 1).

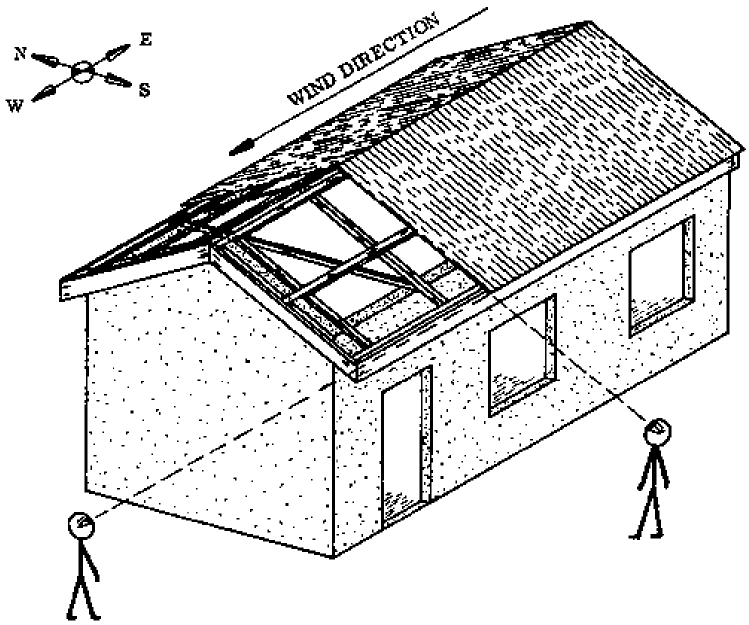

Fig. 1

For nailing the sheets it is best to have one man at each purlin.

- SEQUENCE OF OPERATIONS: In order to join the overlaps correctly, follow this sequence, starting from the end of the roof which is in the direction where the strongest winds are coming from (here it is the east) (Fig. 1).

  a. Place sheets 1 and 2 loosely along the gable end, with sheet 2 overlapping sheet 1 by 15 cm in the length (Fig. 2).

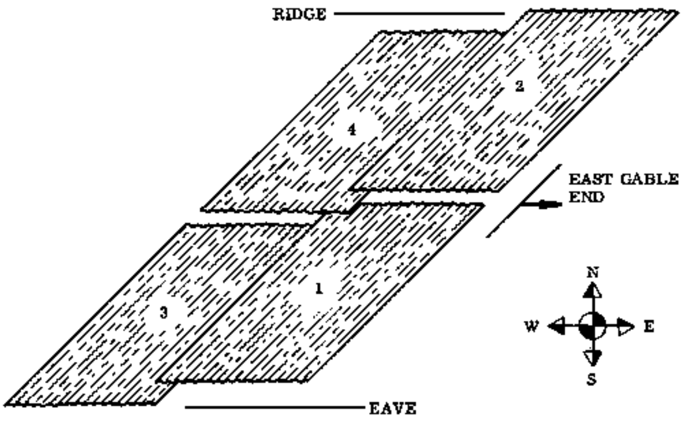

Fig. 2

b. Align them with the help of the two observers on the ground.

c. Secure the sheets with one nail in the middle. One man should do the securing, or the sheets might shift because of the shocks of the hammer blows.

d. Have the observers check that the sheets are still straight in both directions.

e. Nail the sheets home with all of the required nails except the nails at the edges where the next sheet will be fixed under.

f. Place sheet 3, lifting up the edge of sheet 1 until it overlaps sheet 3 by two corrugations (Fig. 2).

g. Place sheet 4, lifting sheet 2 until it overlaps sheet 4 by two corrugations. Sheet 4 should overlap sheet 3 in the length by 15 cm (Fig. 2).

h. Align sheets 3 and 4 with the help of the two observers on the ground.

i. Secure the sheets with one nail each at the centre.

j. Recheck the straightness in two directions.

k. Nail the sheets home with all the required nails except the ones at the edge where the next sheet fits.

l. Continue with this sequence until the whole roof is covered.

m. Proceed to build the parapets if they are required.

If no parapets are made, the last corrugation at the gable ends can be lapped over the fascia board, turned down and nailed onto the face of the fascia. Place the nails at intervals of about 10 cm.

- NOTE: In northern Ghana, the strongest winds are from the east, so you should start laying the sheets from the east end of the building. In areas where the wind comes from another direction lay the sheets accordingly.

Sidelaps

Since corrugations often get distorted or flattened, it can sometimes be difficult to get an exact and watertight sidelap between the sheets.

To straighten the sheet and get a good sidelap, fix all the required nails in the middle corrugation after first securing the sheet with one nail and checking the straightness. Then press the sheet to the correct position and nail the rest of the sheet (Fig. 1).

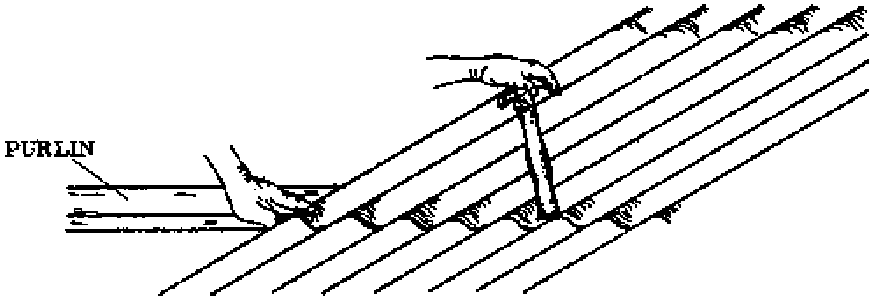

Fig. 1

Do not try to get a sheet in the correct position by nailing the corners where the 4 sheets meet. This will distort the sheet even more.

Ridge caps

If no ready-made ridge caps are available, they can be made on the site with aluminium or galvanized iron sheets. With the help of two straight-edged boards, the sheets are bent to the required angle on the work bench (Fig. 2).

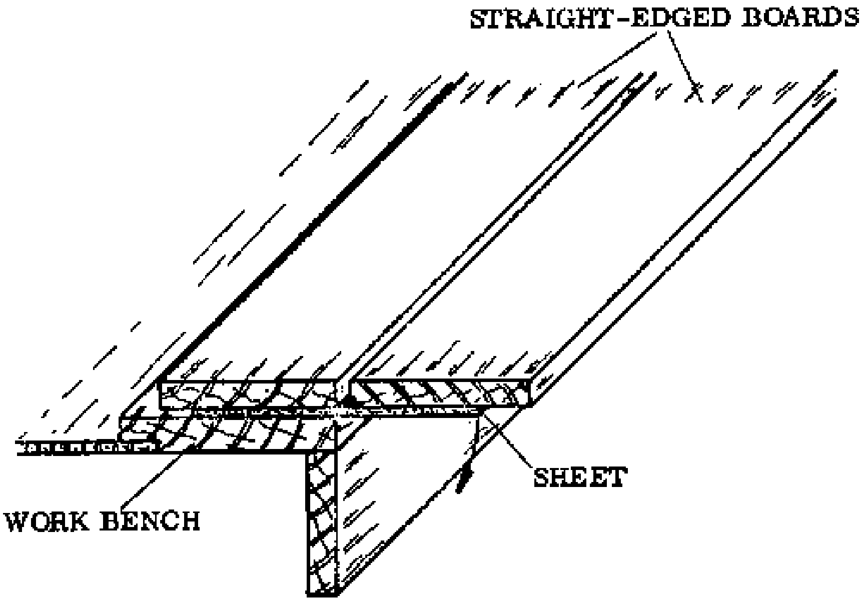

Fig. 2

It is better to make the ridge cap so that the bend goes across the corrugations, rather than along them. This ensures a tighter fit, but the corrugations on both sides of the roof have to match exactly (see Reference Book, pages 231 & 239).

Helpful hints for roof covering

- Put all nails into the washers with the roofing felt before you start laying sheets, to prevent delays.

- The roofing felt can be cut with an iron pipe that has been filed to a cutting edge at one end (Fig. 3).

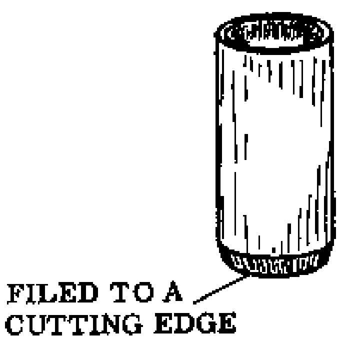

Fig. 3

- Use soap to make driving nails easier in hard wood.

- There should be people on the ground ready to hand up the sheets.

- Before you put a sheet in place, make a mark on the previous sheet to show where the purlin is for nailing.

- Always use a line at the eave, with supports if necessary to keep it straight.

- Have a long, slim and pointed punch ready. It can be made locally from an iron rod. This punch is used to pierce holes through in places where the nail must pass through 4 sheets. Without piercing the hole for the nail first, there is a danger of flattening the corrugation and distorting the overlap while nailing it.

- If a nail begins to bend and should be pulled out, use a round piece of timber or metal as shown in Fig. 4.

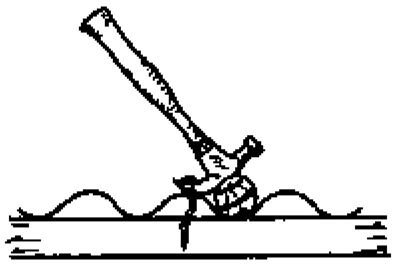

Fig. 4

- Be careful in handling the sheets. They have sharp edges which can cut you deep-

- If a corrugation has been badly damaged through pulling out a nail, try to restore the area around the nail hole to as near as possible the original shape. A round piece of metal can be put under the corrugation to help in this.

- If the sheets have to be cut, do not leave the cut-off pieces lying around. They can still be used for other work.

- Do not leave sheets lying where people might step on them and flatten the corrugations.

- Be sure, especially in seasons where there is a danger of storms, that no sheets are left loosely nailed to the roof, or left on the ground without being weighted down or otherwise secured. A sheet blown around by the wind can easily kill someone.

NOTES:

HEAT PENETRATION - INSULATION

One of the main goals of building in the tropics is to reduce heat penetration into the building. There are a number of building constructions which help to make the building cooler.

- Build in an east-west orientation, so the sun hits directly on only the end walls of the building.

- Construct a verandah to shade the wall.

- Construct overhanging eaves or overhangs to shade the walls.

- Use an open roof construction (no ceilings) on the verandahs, overhangs and overhanging eaves; to permit cross ventilation between the roof and ceilings in the rooms.

- Make ceilings in the rooms so that the sun cannot heat the room directly through the roofing sheets and so that there is cross ventilation between the sheets and the ceiling.

- When possible, use a combination of any or all of the above constructions.

LIGHTENING

To prevent lightening from striking a building, you can install a lightening conductor. This is a pointed copper rod, which is fixed above the highest point of the roof and connected to a copper rod driven into the ground. Long buildings need more than one lightening rod. Follow the manufacturer's instructions to install the conductor.

NOTES:

HIP ROOFS

A hip roof is often chosen as an alternative to a gable roof. It has a nicer appearance, and it is less vulnerable to suction from heavy winds. However it takes more work to construct it, and requires more timber than a gable roof. Also there is a certain amount of waste involved in cutting the sheets at the corners. The hip roof is more apt to leak unless it is constructed exactly right.

The main part of the construction is the same as for the gable roof. In addition, a half truss and two hip trusses are needed for each hip (Fig. 2).

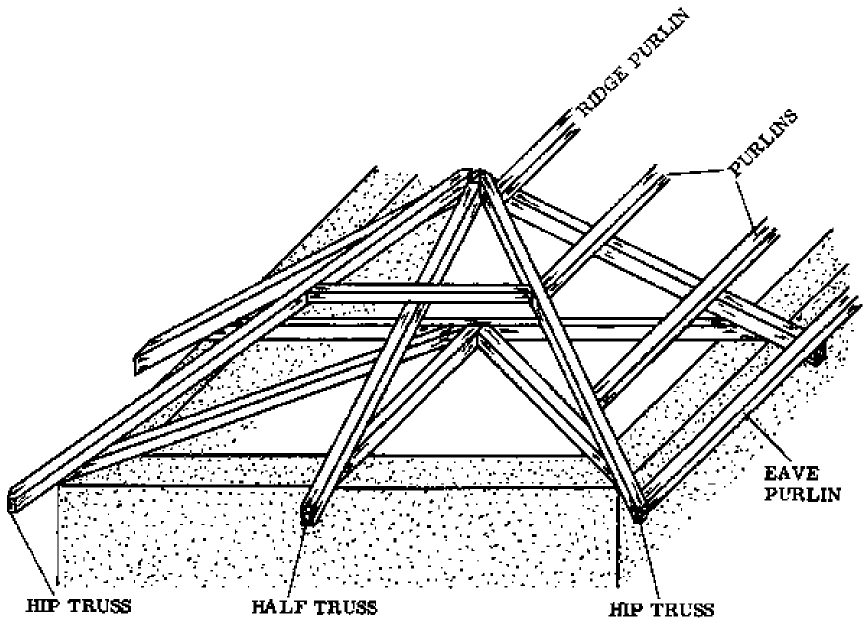

Fig. 2

- NOTE: TO MAKE THE ABOVE DRAWING SIMPLER, BRACES ARE NOT SHOWN.

The two hip trusses run diagonally from the ridge of the last full truss to the corners of the building. The hip rafter has to sit higher than the other rafters, so that the purlins butt into it at the side instead of lying on top of it. This is so that the sheets will be able to fit smoothly around the hip (Fig. 1).

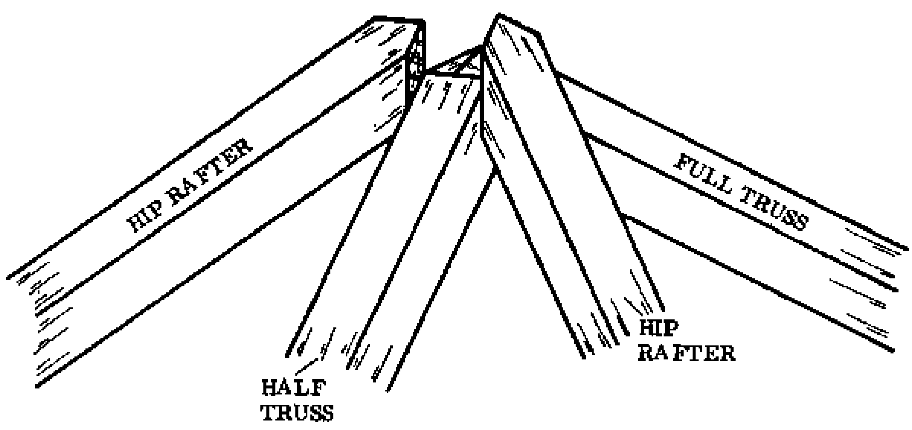

Fig. 1

The half truss is set out in the same way as the full truss, with only half the span. If the tie beams of the other trusses will project beyond the walls, the half truss tie beam has to project by the same amount (Fig. 3).

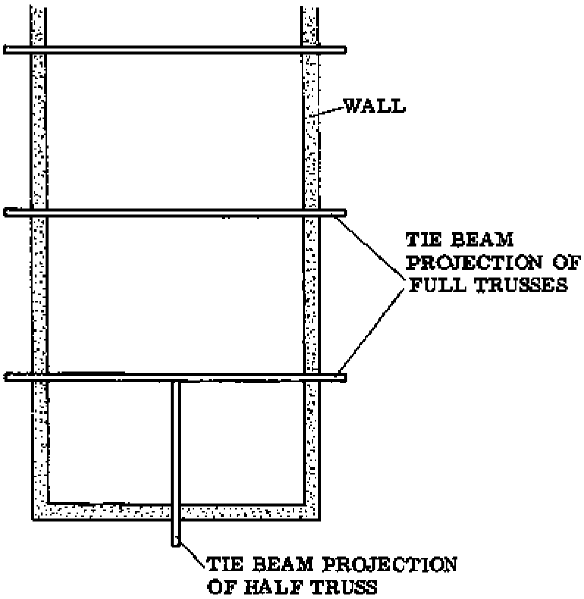

Fig. 3

Setting out and constructing the half truss

Before the half truss is fixed, all the other trusses have to be in place.

To assemble the half truss, use the same setting out which was made for the full trusses. Simply construct half of a full truss. The last brace near the ridge should be set back about 10 cm from the end, to leave space for fixing the trusses together (Fig. 1, arrow).

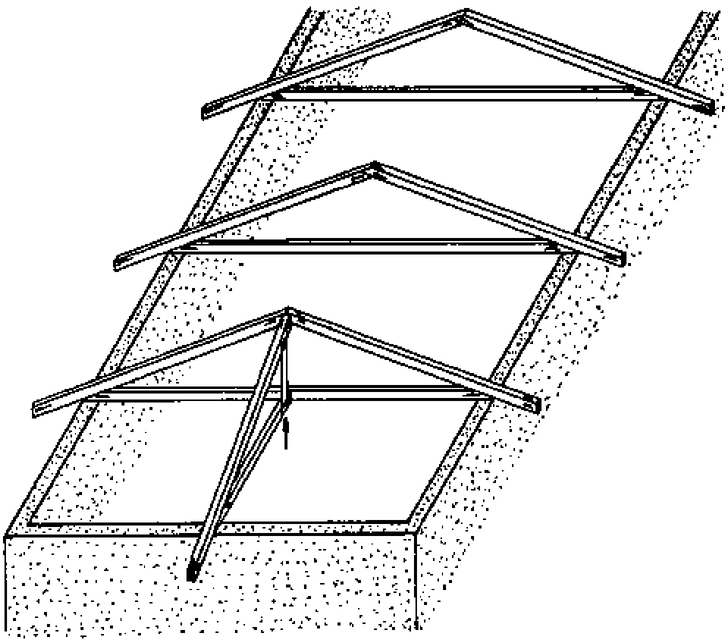

Fig. 1

- NOTE: TO MAKE THE DRAWINGS SIMPLER, BRACES ARE NOT SHOWN.

When the half truss is ready, fix it temporarily into place against the full truss. Remember that if the other tie beams project past the walls, the half truss tie beam must also project, by the same distance.

Position and measurements of the hip truss

Follow the sequence below to find the measurements for the hip truss, as well as its correct position.

a. Lay two purlins flatwise near the eave and ridge, across the last 3 full trusses of the roof. Make sure that they are aligned parallel to the wall, and nail them temporarily (Fig. 2).

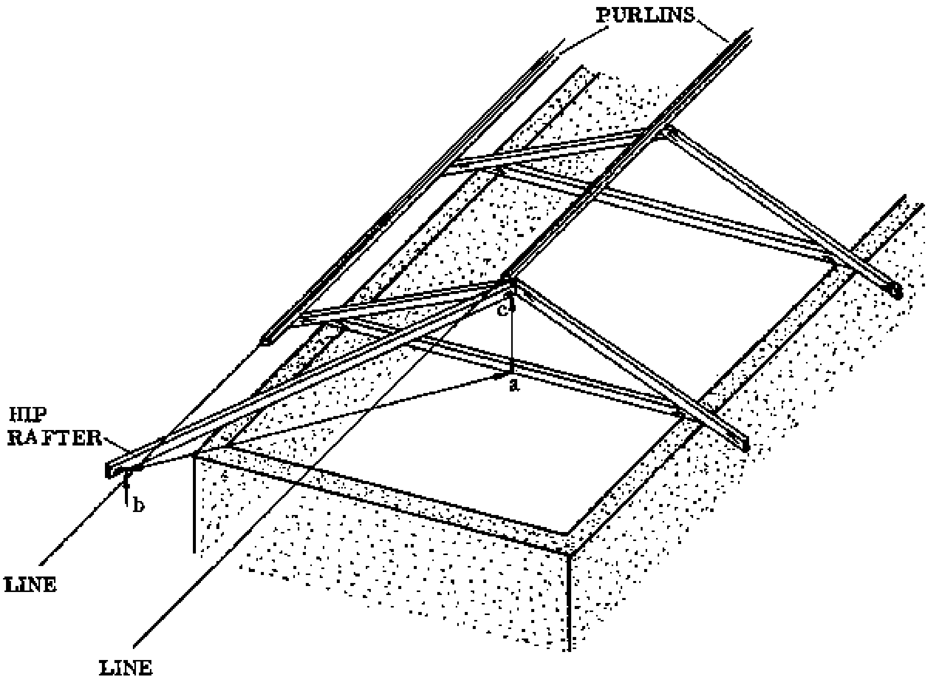

Fig. 2

b. Fix a line along the top surface of each purlin. The lines should extend past the ends of the purlins to the end wall of the building, where they can be held taut by a temporarily fixed pole. The lines must be taut and parallel to the side wall. Each line should touch the whole length of the top surface of the purlin (Fig. 2)

c. Have two men put the hip rafter in position, holding it so that one end is at the ridge and the other end is above the corner of the building. The top surface of the hip rafter should just touch both lines. Thus, the top of the hip rafter is on the same level as the top of the purlins.

d. Now another man can measure the length of the hip truss tie beam, which will be the horizontal distance from the centre of the full truss tie beam (Fig. 2, point a) to the soffit of the hip rafter outside the wall (point b). This distance is the span of the tie beam for the hip truss (see Fig. 3).

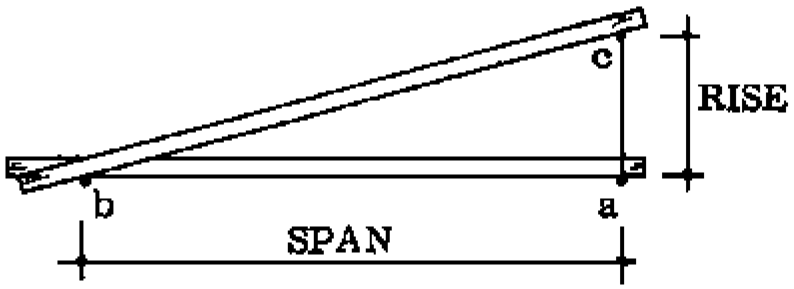

Fig. 3

e. To obtain the rise of the hip truss, measure the distance from the soffit of the full truss tie beam to the soffit of the hip truss rafter (Figs. 2 & 3, point a to point c).

Now that you have the measurements for the hip truss, you can go ahead to construct it. Measure the other hip truss for the opposite side of the roof in the same manner.

Constructing the hip truss

Look at the hip roof design in the Drawing Book, page 108.

- SETTING OUT:

a. Drive pegs 1 and 2 in the ground at a distance equal to the span of the hip truss (the span is measured as described on the previous page). Fix a line between the pegs (Fig. 1).

Fig. 1

b. Fix a line perpendicular to line 1-2, starting from peg 1 (Fig. 1).

c. Drive peg 3 at a distance equal to the rise of the hip truss (Fig. 1).

- ASSEMBLING THE HIP TRUSS:

d. Lay the hip tie beam against pegs 1 and 2 (Fig. 2)

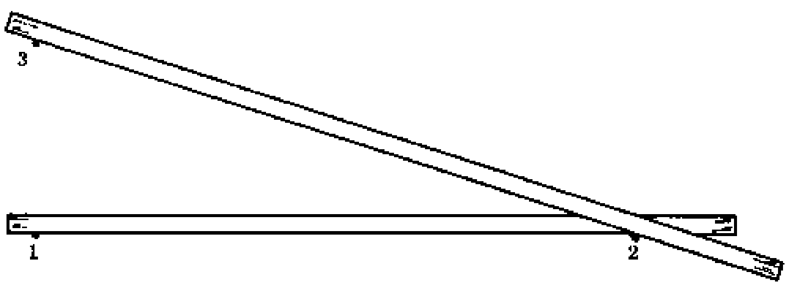

Fig. 2

e. Lay the hip rafter against pegs 2 and 3 (Fig. 2). Make sure that the tie beam and rafter are correctly positioned with respect to the pegs.

f. Cut the rafter-to-tie beam joint. Mark the inside end of the tie beam (a) and the inside end of the rafter (b). Make sure that the rafter has a long project ion on the eave end (Fig. 3). This projection is trimmed only just before the fascia board is fixed (c).

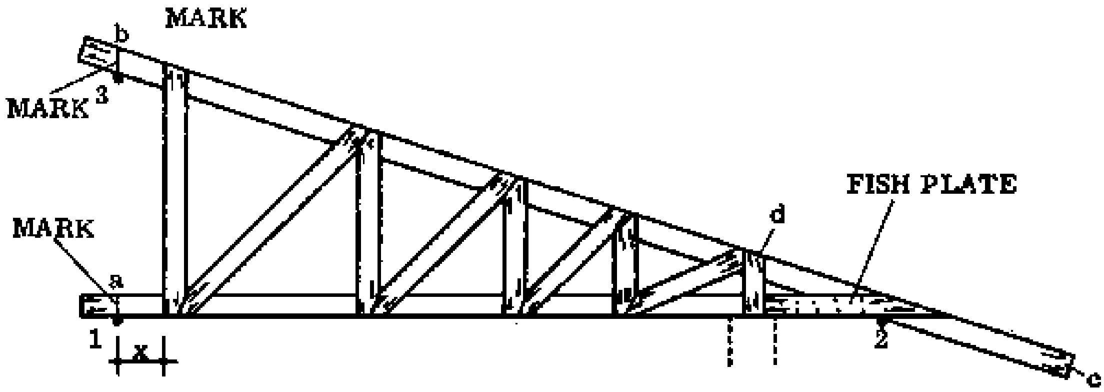

Fig. 3

g. Nail the braces and the fish plates. The last vertical brace on the ridge end is set back (Fig. 3, x) so that there is space to fit the trusses together later. Nail a short vertical brace (Fig. 3, d) where the tie beam meets the supporting wall.

h. Cut the ends of the rafter and tie beam (ends a and b) at a 45 degree angle, as shown in Fig. 4.

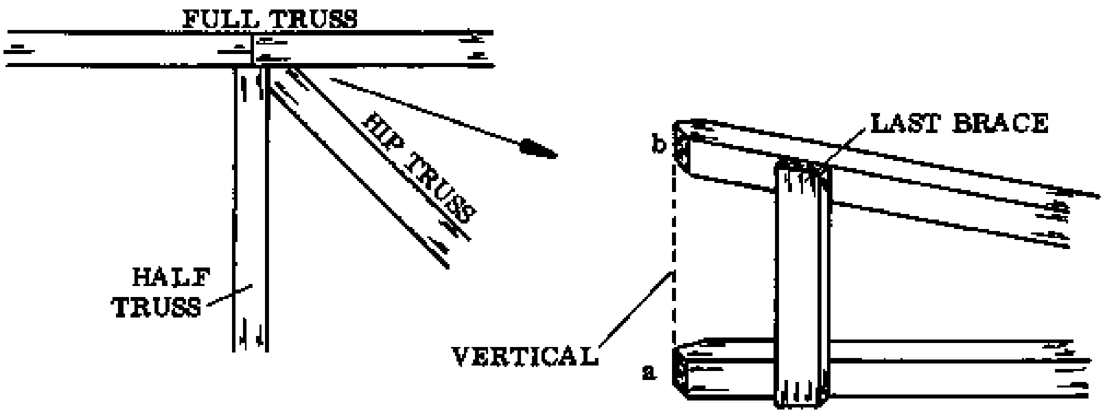

Fig. 4

i. Assemble the second hip truss on top of the first one.

NOTES:

Erecting the hip of the roof

When the half truss and hip trusses are ready, the hip structure of the roof can be erected. The connection between the tie beams of the half truss, hip trusses, and full truss can be made as shown in Fig. 1. The rafter connection is made as shown in Fig. 1 on page 208.

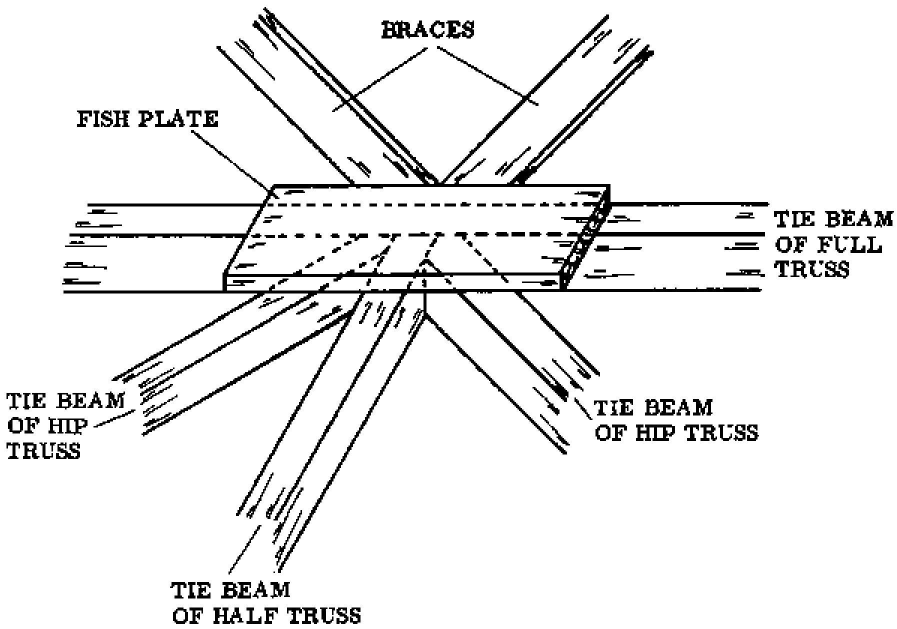

Fig. 1

- FIXING THE PURLINS: The purlins which butt against the hip rafter must be cut at exactly the correct angle so that they will fit snugly against the rafter.

- Mark the positions of the purlins on top of the hip rafters, and insert a nail at the mark to support the purlin during marking (Fig. 2).

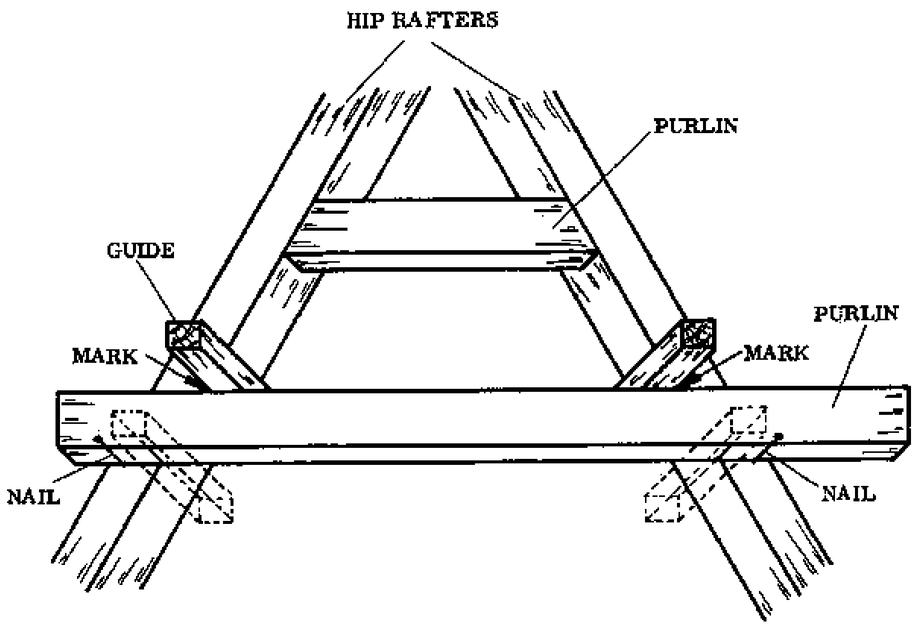

Fig. 2

- Place the purlin against the nails and mark the cutting lines. Use a short piece of wood as a guide (Fig. 2). Make the marks on both sides of the purlin at once, then mark both sides at the other end.

- Cut the butt joints and fix the purlin.

Fix the rest of the purlins in the same manner. The layout for the purlins on a roof with a single sheet length on each side is shown below (Fig. 3).

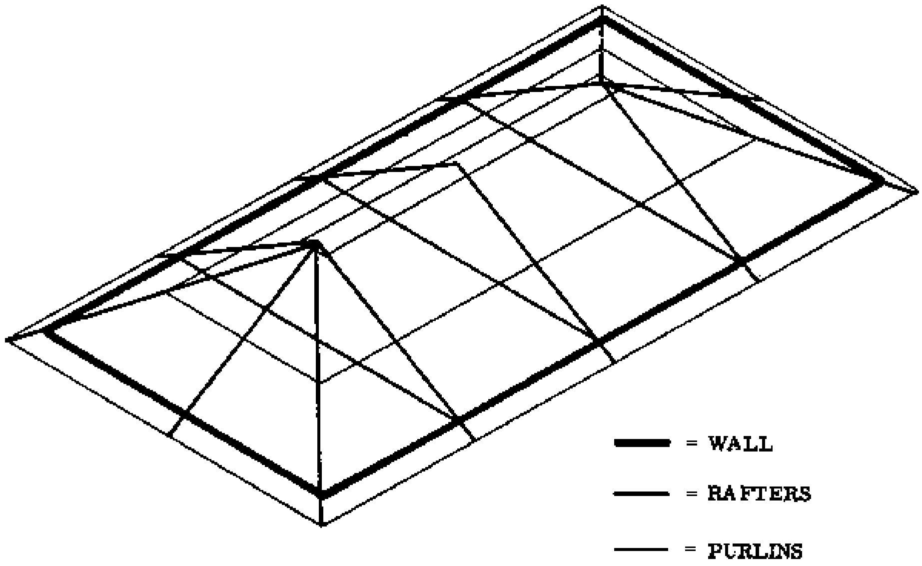

Fig. 3

Covering a hip roof

Nail two purlins parallel to the hip rafters, as shown in Figs. 1 and 2. The extra purlins provide more area for nailing the hip ridge cap.

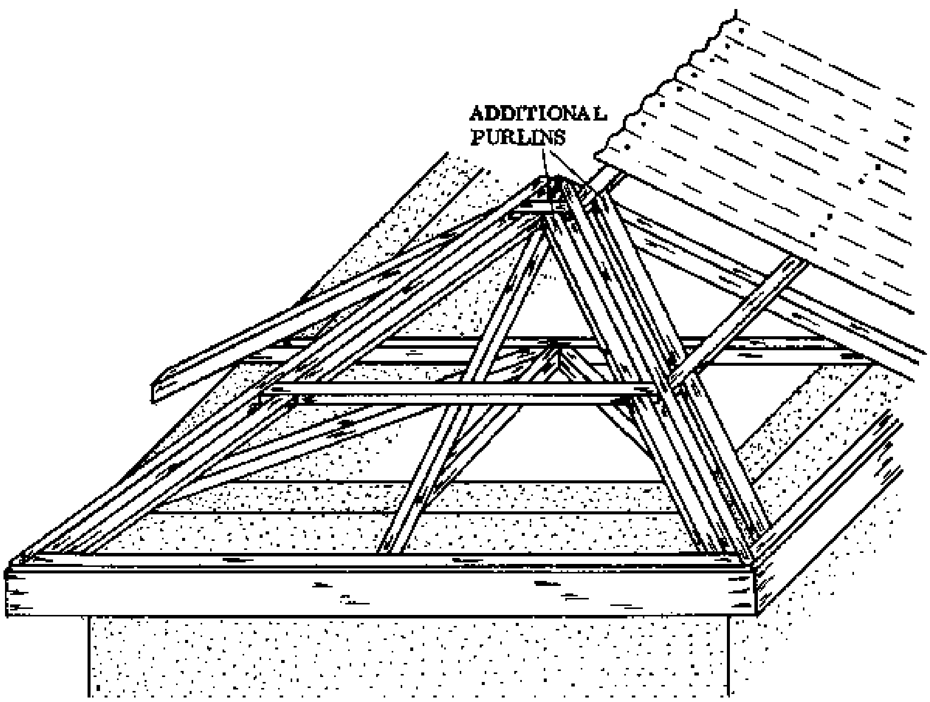

Fig. 1

- NOTE: TO MAKE THE DRAWING SIMPLER, BRACES ARE NOT SHOWN.

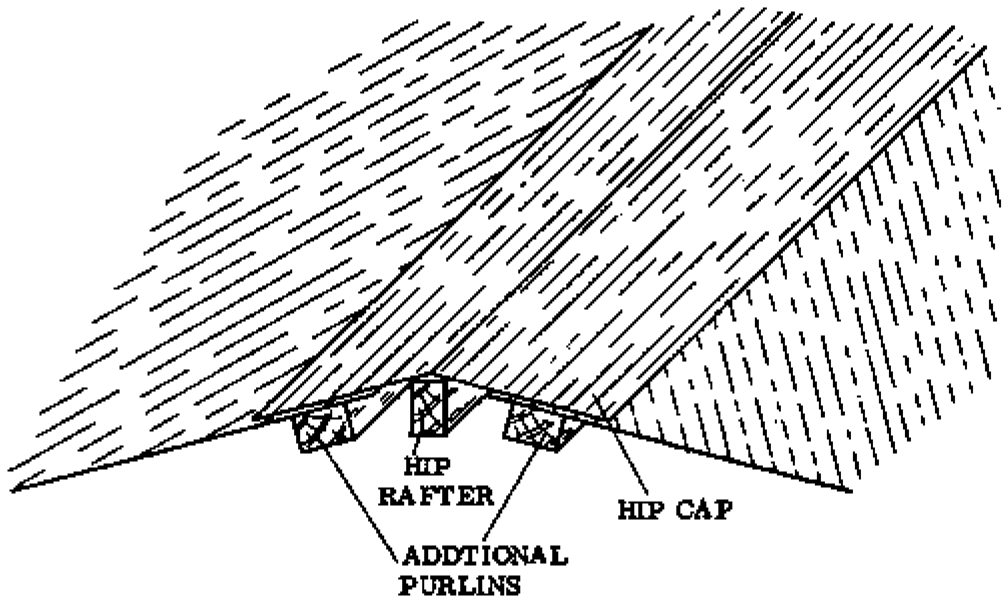

Fig. 2

Lay the first sheet at the hip rafter in position and mark with a straight edge where it should be cut. Cut the sheet and nail it in position before you mark and cut the next sheet. Continue in this way until the hip is covered.

A hip cap, similar to the ridge cap, must be used to cover the hip line, where the sheets meet. If no ready-made caps are available, one can be made as explained on page 205.

NOTES:

HIP AND VALLEY ROOF

When a roof is constructed for an L- or U-shaped building, a hip and valley roof is normally used.

The main problem of this construction is to make a truss which provides sufficient nailing area for the valley and also for the hip. This is solved by assembling two trusses, with spacers in between to connect them (Fig. 1). The spacers provide the required distance between the trusses. This distance is important, because the valley should be wide and deep enough so that rain can run down it easily and so it does not get blocked by leaves (Fig. 1).

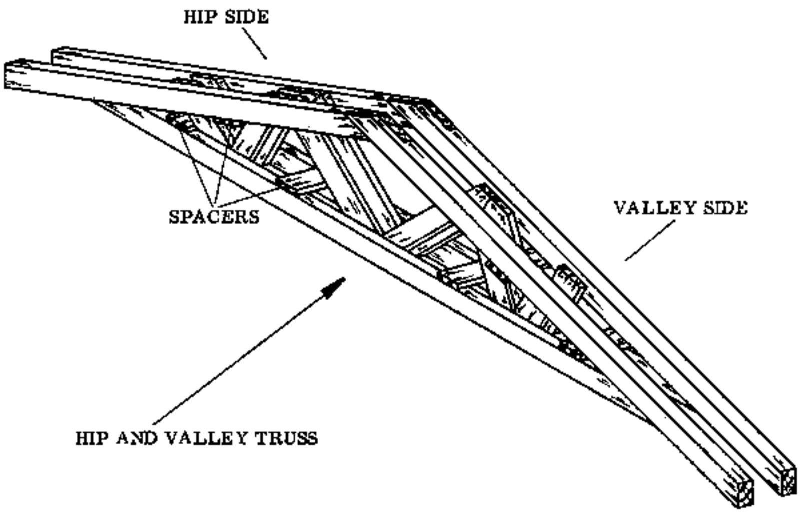

Fig. 1

As in the hip roof, the hip rafters and the valley rafters must be set higher so that the purlins meet them at the sides, and don't lie on top as they do with the other trusses.

If a large span must be covered with a hip and valley truss, it may be necessary to add some half trusses onto the hip and valley truss to provide enough support for the purlins (Fig. 2).

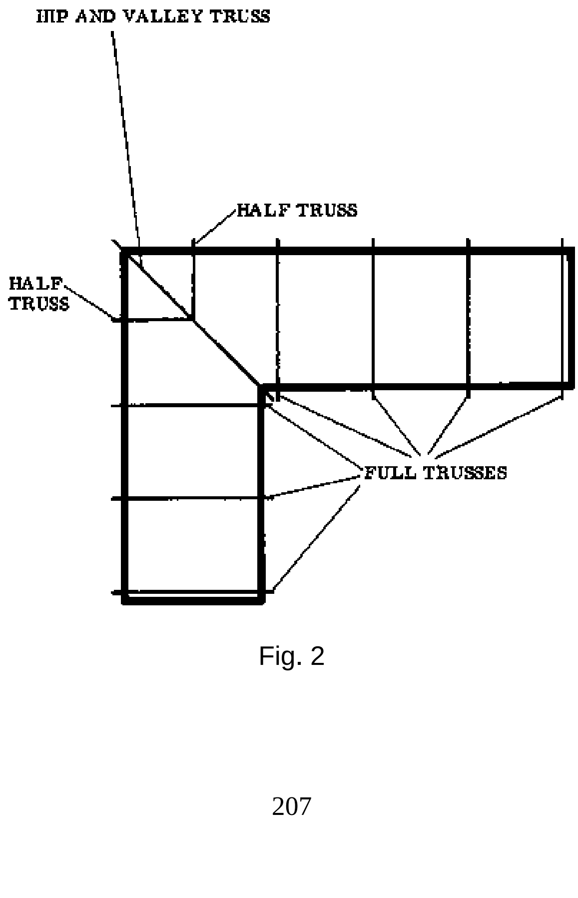

Fig. 2

NOTES:

Position and measurements of the hip and valley roof

- Start by erecting poles in the positions shown in Fig. 1, and fix lines at the ridge.

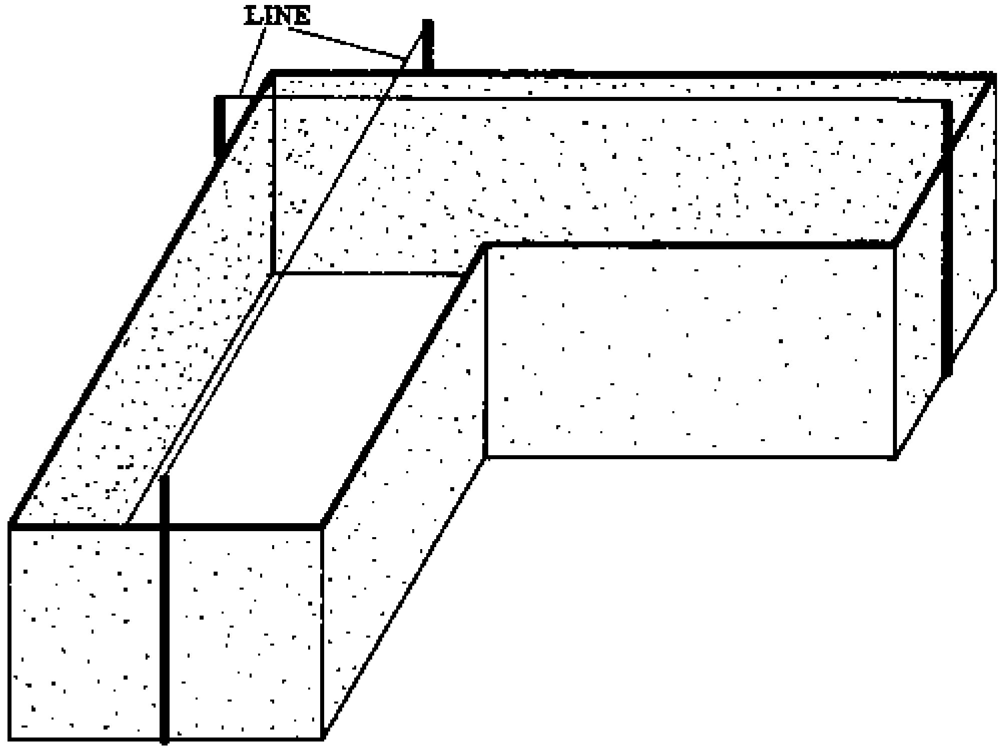

Fig. 1

- Erect the ordinary trusses according to the lines in their correct places (Fig. 2). Refer to the section on erecting a gable roof, page 191.

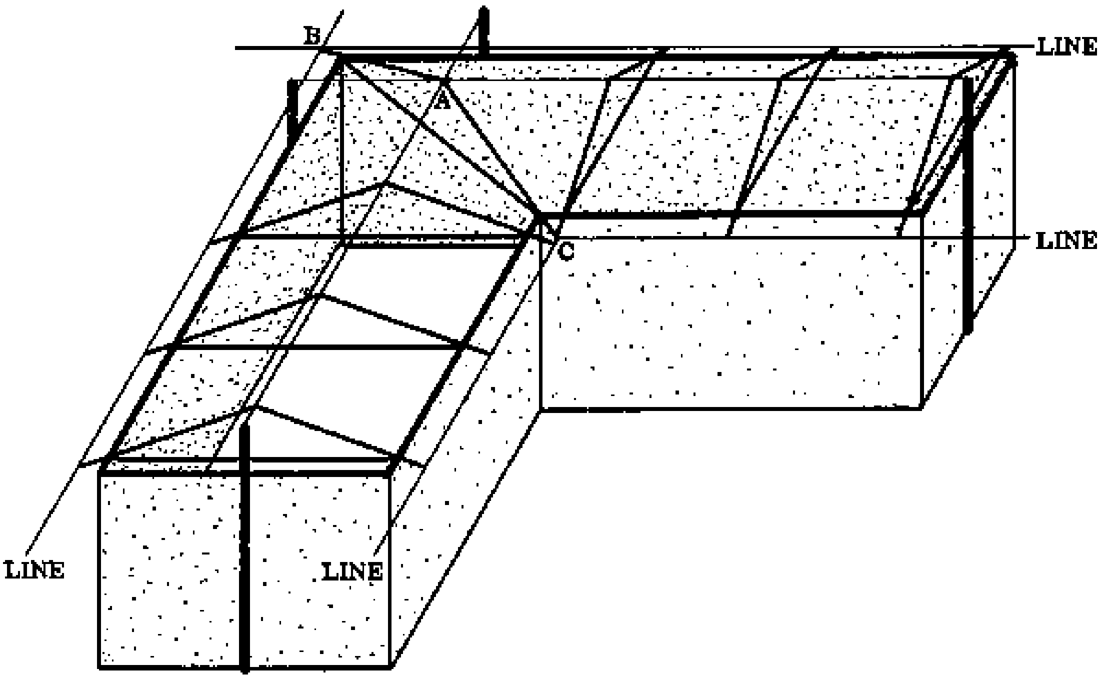

Fig. 2

- Lay purlins temporarily on top of the rafters, as was done with the hip roof (page 211).

- Fix lines parallel to the walls along the tops of these purlins, at eave height on both sides of the roof (Fig. 2).

- Set the ridge lines higher, by the amount of the purlin thickness (Fig. 2).

- Now you will have-three points where the lines cross. These are: point A at the ridge; point B at eave height, and point C on the other side at eave height (Fig. 2). These points mark the outer surfaces of the hip and valley truss.

- Next construct a lightweight, temporary model truss. Hold it in position on top of the roof (Fig. 3). Adjust it until points A, B, and C touch the outer surface of the truss.

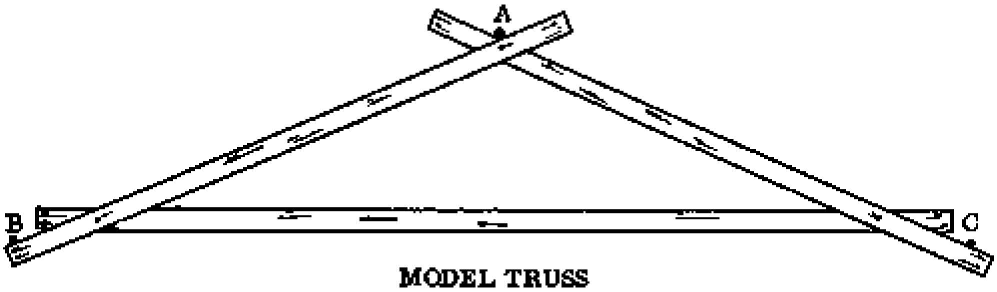

Fig. 3

- Now the model truss will have the correct dimensions and can be used as a model for constructing the two trusses of the hip and valley truss.

NOTES:

Construction of a hip and valley truss

Take the model truss down and set it on the ground in a cleared and level spot.

- Place an iron peg at each side of the model where the rafters meet the tie beam (Fig. 1, pegs 1 and 2) and one peg at the ridge (peg 3). Remove the model truss.

- Now lay the actual tie beam on the ground against the pegs.

- Lay the two rafters on the ground in the correct positions. Be sure that the members are in the correct positions with respect to the pegs, as in Fig. 1.

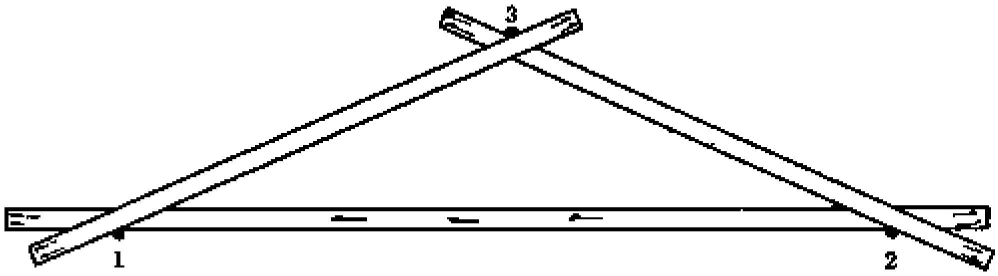

Fig. 1

- Cut the rafter-to-tie beam joint, and the ridge joint (Fig. 2).

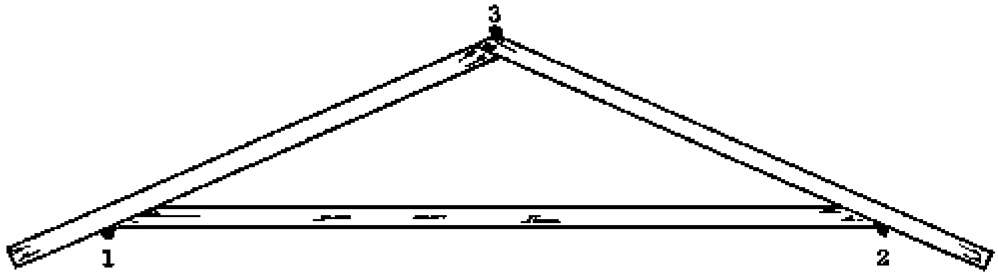

Fig. 2

- Nail the braces. Take care that the braces are set back from the top of the rafters on the valley side, so there is room to construct the valley later (Fig. 3).

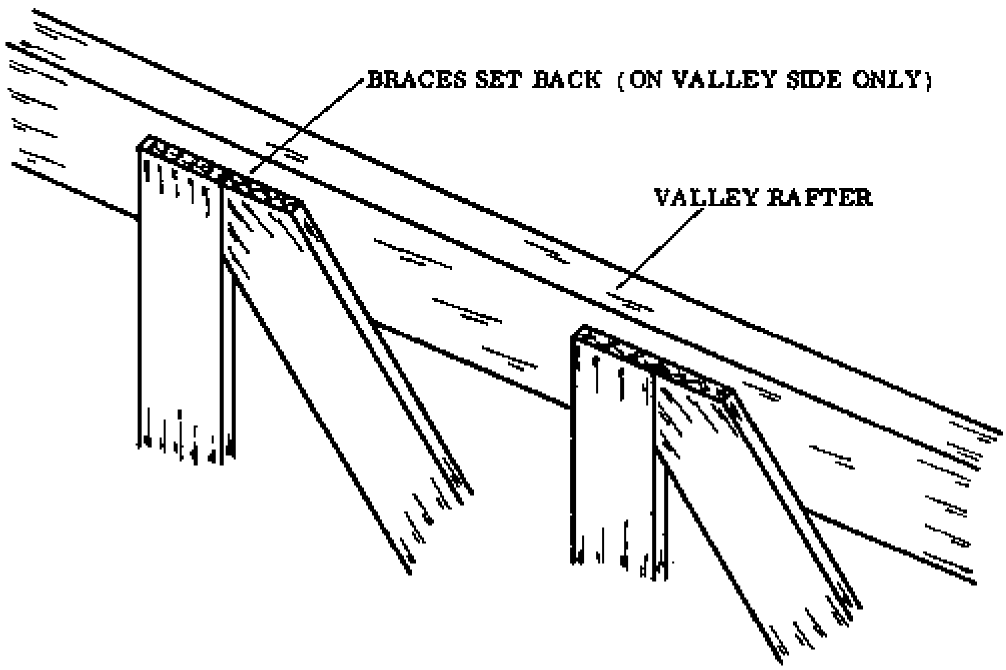

Fig. 3

- Assemble the second truss on top of the first one. Be careful to nail the braces so that later when the two trusses are combined, the braces will all be on the inside (Fig. 4).

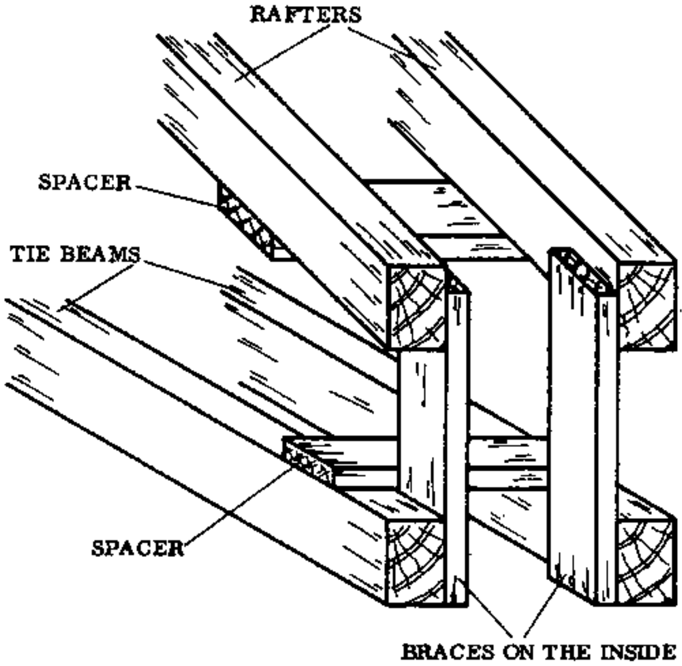

Fig. 4

- When both trusses are ready, they can be set in place on top of the wall. Then the spacers can be nailed to keep the trusses at the correct distance apart. Re member that the distance between the trusses should be wide enough (approximately 15 cm) to provide a wide valley.

Covering a hip and valley roof

First fix the fascia boards and the purlins. Fix a line at eave level and cut the rafters according to this line. Then nail the eave purlin and the fascia boards.

At the place where the fascia boards meet at the valley, cuts have to be made in the fascia boards according to the shape of the gutter (Fig. 1).

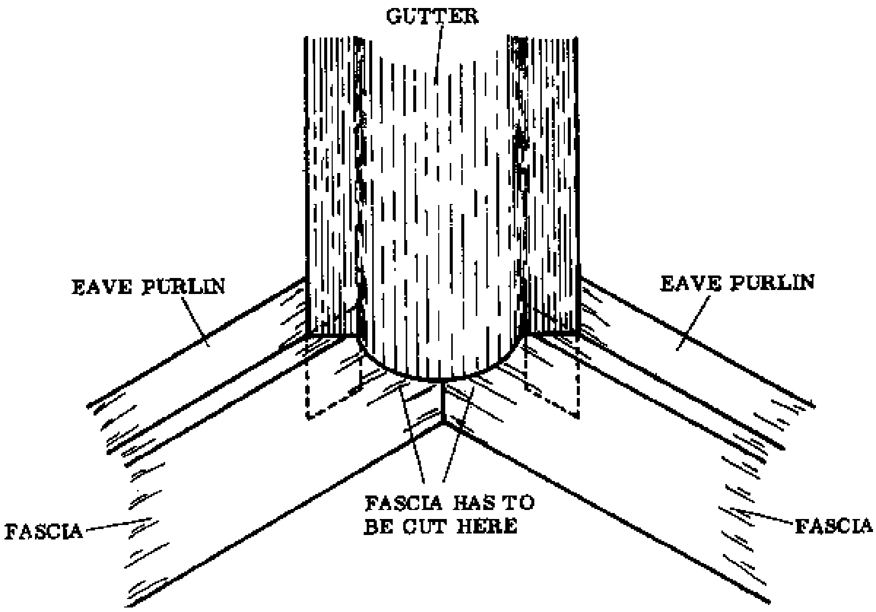

Fig. 1

Now fix the gutter in the valley. Lay a strip of sheeting metal lengthwise in the valley in the form of the required gutter. Fix it there temporarily with nails. The final fixing will be done as the other sheets are laid, since they have to be laid on top of the gutter. The overlap for the gutter sheets should be about 30 cm in the length.

Now lay the first sheet into position at the valley, mark and cut it. Nail this sheet and place the next sheet in position. Continue in this way until the hip and valley are covered.

Install the hip cap as explained for the hip roof.

The ridge cap on the main ridge is always covered last, since it has to overlap all the rest.

PLASTER AND RENDER

Plaster or render is a mortar coating over the blockwork. We call the coating on the inside walls “plaster” and the coating on the outside walls “render”. The main difference between the two is that render is generally richer in cement than plaster, because it has to be weather resistant. In the following pages we will refer to the application of either plaster or render as “plastering”.

The function of the plaster inside is to make the walls smooth so that they are easier to clean, free of insect hiding places, and have a better appearance. Also, if the house is constructed out of wood or bamboo closed up with mud or clay, the plaster acts as a protection against fire.

The render on the outside surface of the walls is essential to protect them from the influence of the weather, especially if landcrete blocks or mud blocks are used. When these blocks are exposed to moisture for long periods, they gradually become soft, expand, and finally crumble away. The render must therefore be water resistant.

- All external walls should be covered with render. The sides of the building that face the heaviest weather (in north-western Ghana, this comes from the north-east) should be covered with a somewhat richer mix (Fig. 1, a, next page).

- All so-called wet rooms such as bathrooms, toilets, kitchens, and washing areas should be plastered and painted. (Fig. 1, next page: K = kitchen; S = shower; and W = washing area.)

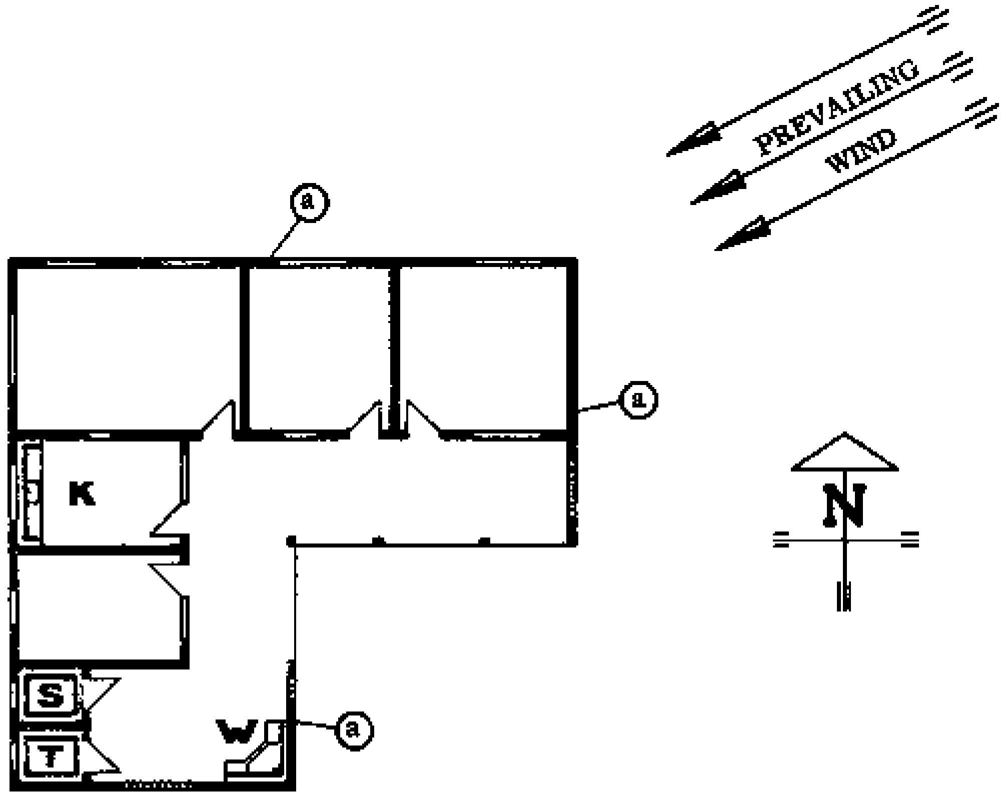

Fig. 1

Composition of plaster or render

In Rural Building, plaster or render consists of cement, sand, and water. Lime can be added to the mix, but this is not always available.

Sharp and relatively coarse sands are preferred for render, although they produce a mortar which is not easy to work with. The size of the grains should be no greater than 5 mm; the sand should be well graded (Reference Book, pages 148 and 149); and it should not contain more than 20% very fine particles (powdered sand).

The sand for plaster should be well graded, but less coarse than sand for render (see Reference Book, page 159).

- MIX PROPORTIONS: The mix proportion for plaster need not be better than 1:8, and may be as low as 1 : 12. The exception to this is the plaster for an area which is often wet, such as a bathroom or washing area. These should be plastered with a mix of about 1 : 6.

The mix proportion for render should never be better than 1 : 6; this is for the north and east sides of the building (or whatever direction the heaviest rain comes from). The other sides of the building can be covered with a mix which is at least 1 : 10 (see the Reference Book, Tables of Figures, page 234).

Exceptions are made for special structures which need waterproof plastering, such as water storage tanks, septic tanks, inspection chambers, manholes, etc. The mix proportion of the plaster used on these may vary from 1 : 3 up to 1 : 1, because the permanently moist surfaces keep cracks from developing.

- REMEMBER: The richer the mix, the more likely it is to develop cracks. Save materials and money by following the rules for correct mix proportions.

Preparing the wall for plastering

During the blockwork as the wall is built-up, the first measure is taken to prepare the wall for plastering: the joints are raked out to a depth of approximately 1,5 cm (Fig. 2). This is done immediately after each course is completed. Raking out the joints gives the plaster or render a better grip to the wall.

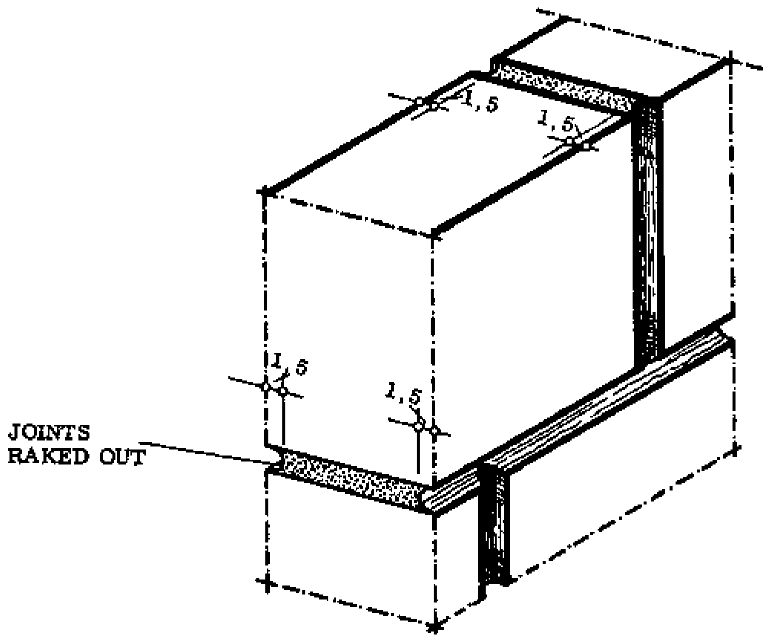

Fig. 2

Before any plaster or render is applied, the wall must be brushed to remove the dust and dirt which would weaken the grip of the mortar. The masonry must then be thoroughly watered, especially during the dry season. This reduces the absorption of water from the freshly applied mortar, so that the mortar hardens well.

- NOTE: Some experiments at NPVC have shown that the landcrete surface can be improved by leaving the walls exposed to one or two short rains before plastering. The rain washes out the finer particles, leaving a rough surface which bonds to the plaster or render better. This method is risky however, because it is impossible to tell in advance how long the rain will last and how heavy it will be.

Application techniques

- SPATTERDASH: In order to give a good grip on smooth surfaces such as sandcrete, or to reduce the amount of moisture absorbed from the freshly applied mortar, spatterdash may be applied before plastering. This is done with the spatterdash apparatus (see Basic Knowledge, page 178), using a very wet and rich mix (1 : 3, up to 1 : 1). The spatterdash layer is never more than 5 cm thick.

The plaster or render is generally applied in a single layer on top of the spatter-dash, or else directly on the blockwork surface. This layer will be 15 to 20 cm thick.

Sometimes a second coat or finish coat is applied on top of the first layer. This must be done before the first layer has hardened. The second coat is usually made where the plaster has to be very thick, for example where the wall is very uneven so that a thick coat of plaster has to be applied to get a smooth surface. The second coat should be about the same mix as the first coat, and about 5 cm thick.

Don't start plastering on a wall which is in direct sunlight. This would cause the render to dry out too quickly, resulting in a “burnt” render which is useless.

Instead, start plastering in the early morning on the west side of the building, going clockwise around the building to the north, east, and south sides so that the freshly plastered areas are always in the shade.

Areas which are too large to be completely plastered in one day are divided into smaller areas by introducing working joints (Fig. 1). The joints should always be vertical, so that water will flow away as quickly as possible from the joint.

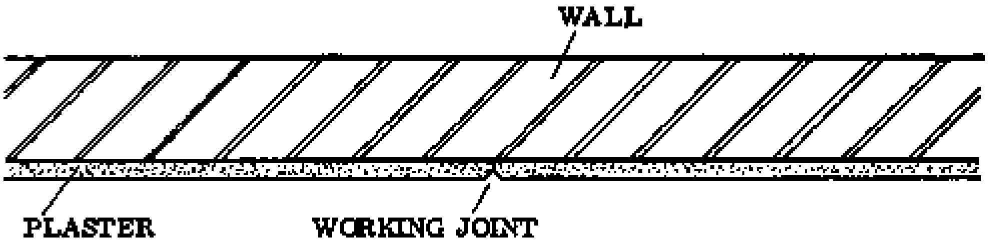

Fig. 1

In Rural Building, the inside of the building is generally plastered after the roofing is completed.

- PLASTERING THE FOOTINGS: Here we must add a note about the footings. These have to be plastered before the rising wall. This is done as shown on the left (Fig. 2; a, b, & c).

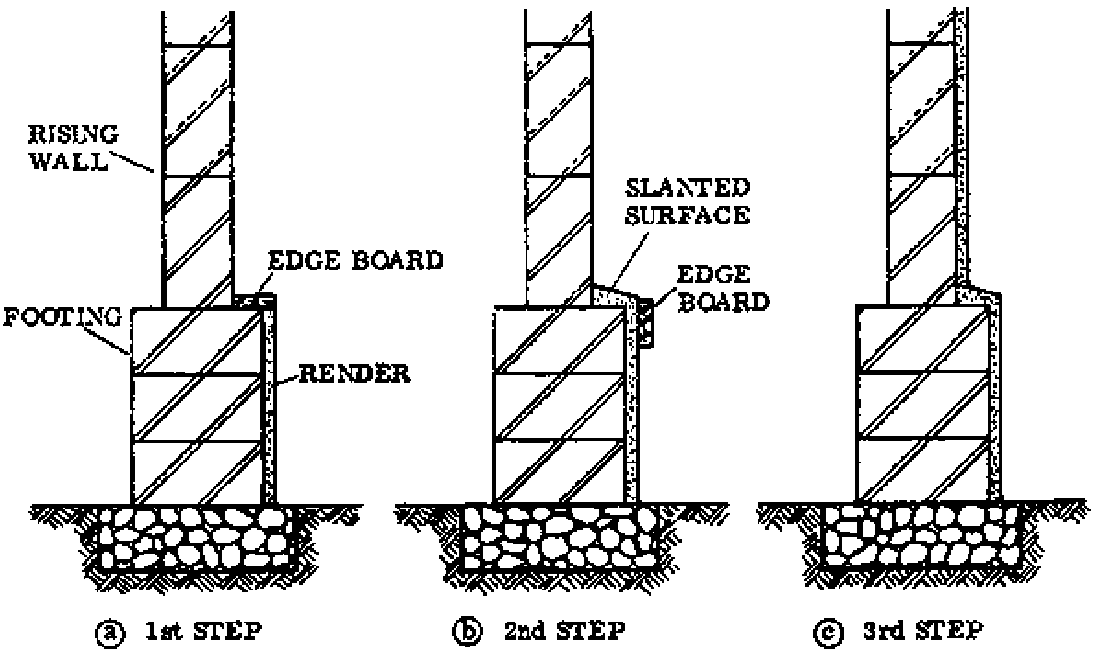

Fig. 2

An edge board is laid on the ledge of the top of the footings, and the vertical surface below is plastered according to the procedure explained on the following pages.

Next the ledge is plastered. The render must form a slanted surface so that water runs away from the wall. It is important that this slanted surface is made before the rising wall is plastered, because otherwise the joint between the two would allow water to enter (Fig. 2; b & c).

NOTES:

Sequence of operations for plastering a straight wall

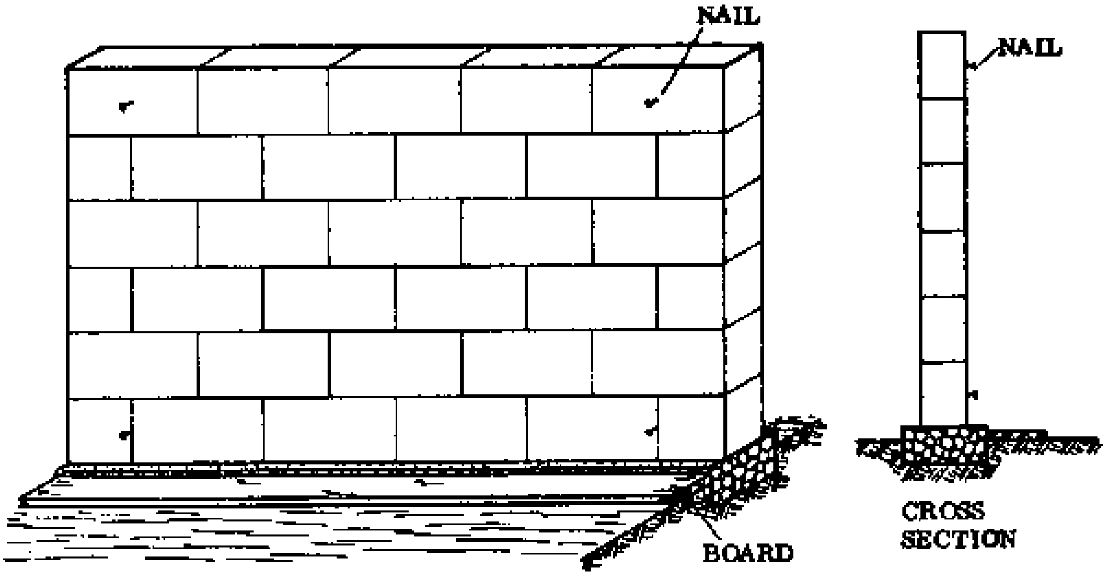

a. Study the wall which is to be plastered; notice the holes and projecting parts.

b. Clean the wall with a hard brush and chisel off any projecting blocks.

c. Soak the wall thoroughly with water; try to wash off the loose particles. Clean the wall very well, especially the area near the footings and the footings them selves.

- NOTE: In the drawings here the footings have been left out, to make the drawing simpler. The plastering of the footing - rising wall connection is made as explained on the previous page.

d. Place boards against the foot of the wall to catch the mortar which is dropped.

e. Prepare some mortar which is of the same strength as the wall, and use it to fill up the larger holes in the wall.

f. Make a scaffolding to work from, if this is needed.

g. Insert four nails, one at each corner of the wall.

NOTES:

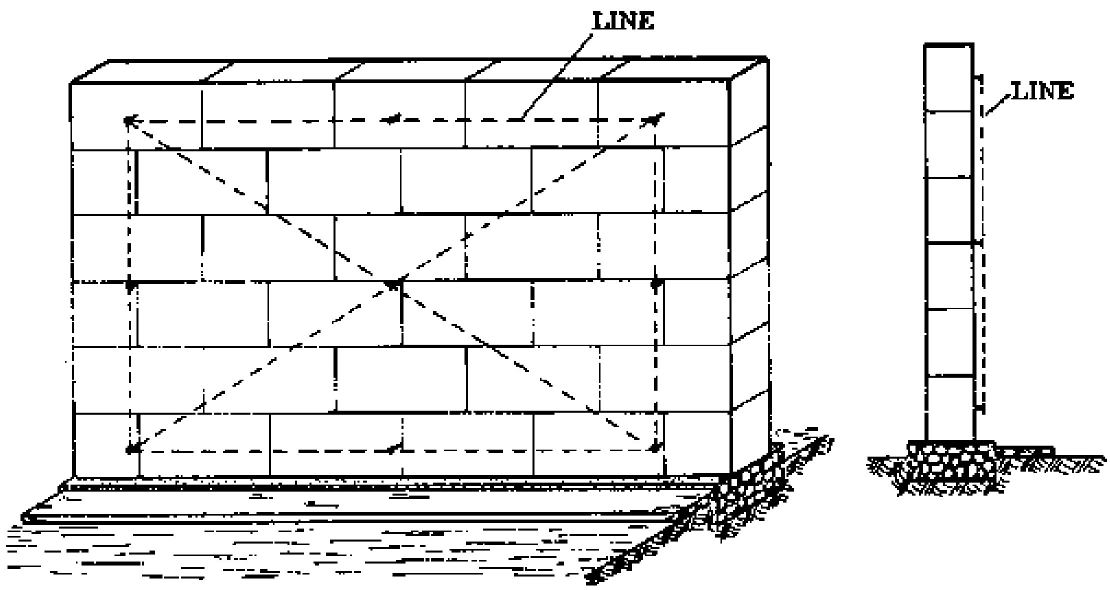

h. Fix lines around all four corners and across the diagonals.

i. The surface contained by the nail heads and the lines should be flat and plumb. Check this using the plumb bob and straight edge. Make corrections by knocking the nails in until they are ail in the same plane; this will be the surface of the future plaster layer.

j. When the four corners have been adjusted, insert more nails along the mason lines, as shown above. The heads of the nails should be at the same height as the lines. The distance between the nails should be no more than the strike board can bridge.

NOTES:

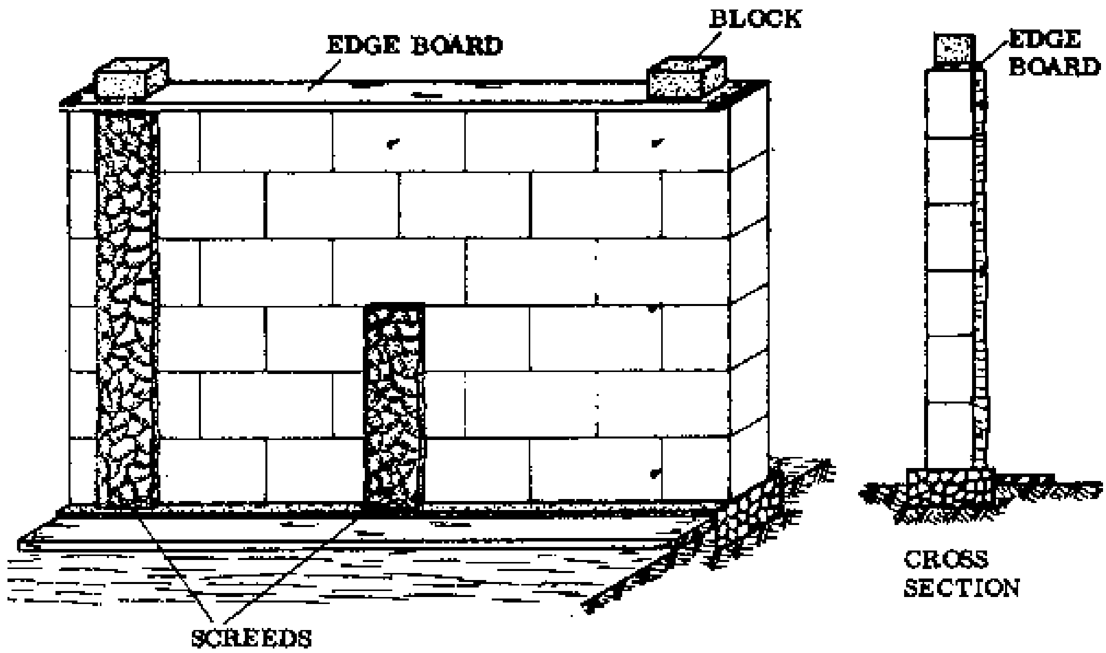

k. Fix the edge boards. The edge board at the top of the wall can be held in place with blocks on top of it. The edge boards should project by the same amount as the nails - the thickness of the future plaster layer.

l. Now the plastering can start. Make sure that you have enough time to finish the whole area you want to plaster at once, otherwise wait until the next day.

m. Mix the mortar according to the required proportions. Take care that there are no stones in the plaster. Make up a dry mixture first and add water to this as it is needed. Do not mix too much at once, and keep the mortar covered with paper bags or other covering to keep out the sun and wind.

n. Sprinkle the wall with water again.

o. Build up screeds (guiding strips) by throwing mortar against the wall in vertical strips. The mortar should cover the nail heads completely.

NOTES:

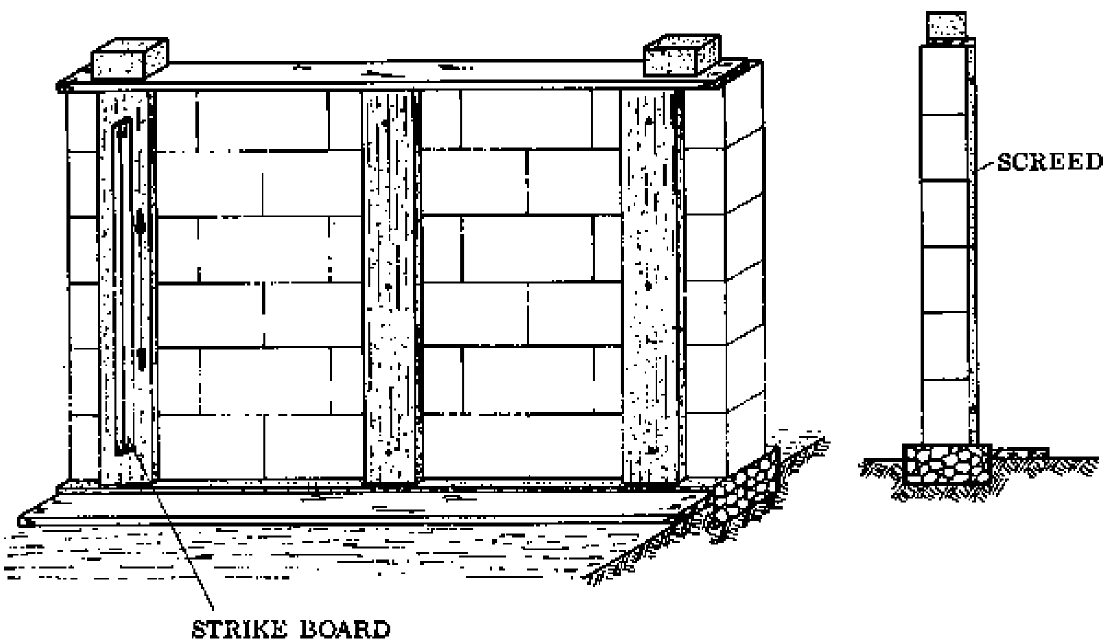

p. Use the strike board to smooth off the screed flush with the heads of the nails. Return any mortar which drops down to the headpan. Give the strike board an up and down movement as you move it across the screed, to obtain a good surface.

q. Let the screeds set for a while, until they are hard enough so that no mortar will be taken off by the strike board during the next steps.

NOTES:

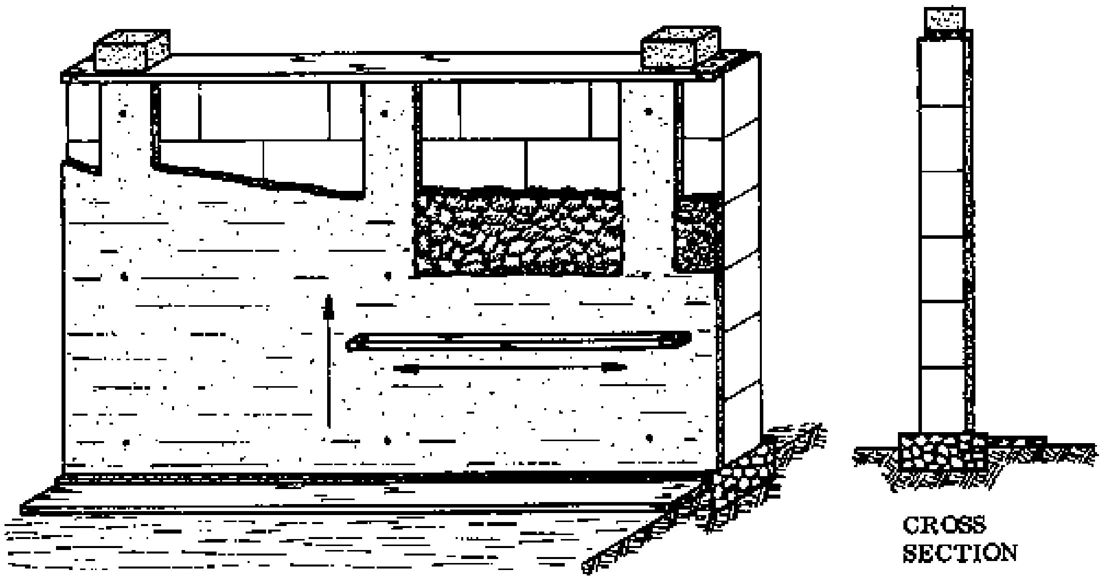

r. When the screeds are hard enough, sprinkle the wall with water again.

s. Fill in between the screeds with mortar. Throw the mortar against the wall, so that it grips well to the wall. The mortar should be a bit thicker than the screeds.

t. Press the strike board to the screed and move it up the wall, holding it horizontally. The board should remove the excess mortar so that the surface of the mortar is flush with the screeds. Make sure that the strike board does not remove any of the mortar from the screeds. Return all surplus mortar to the headpan.

It is not necessary to fill up the whole section between the screeds before you start to smooth the plaster. Fill in the plaster as high as you can comfortably reach, then smooth this and fill in the rest with the help of a scaffold so you can reach the top of the wall. Smooth up to the top of the wall. However, you should never leave a section halfway finished, because it will not join properly when you continue the next day.

u. When the whole wall has been levelled off the nails should be removed and the last finishing work can be done.

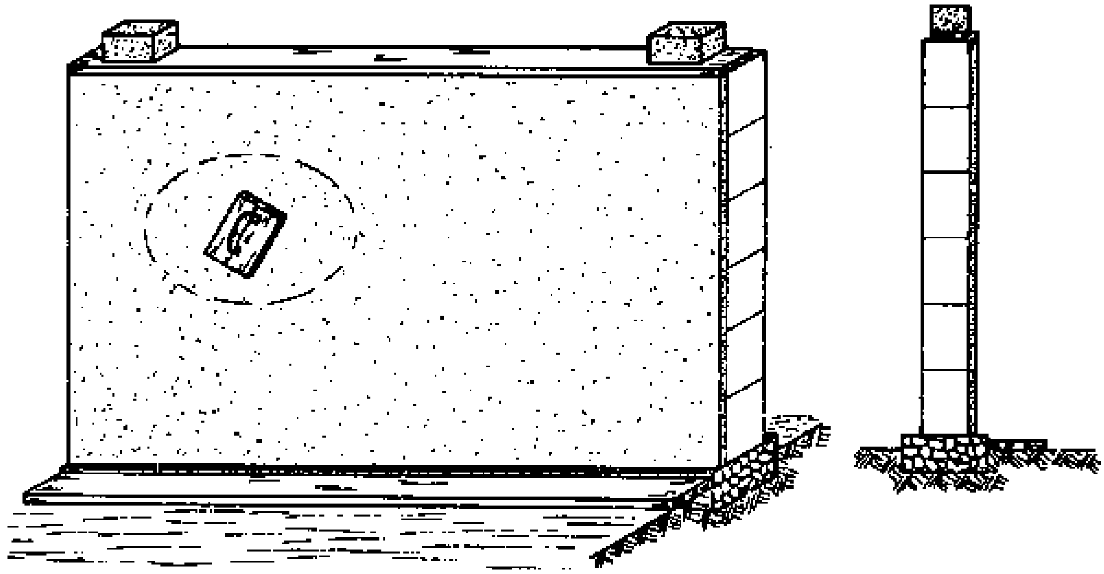

- FINISHING: If the wall should be finished with a textured surface, a wood float can do the job. Turn the float around systematically to obtain a regular texture.

If a wall should be smooth-surfaced, use a steel float and take care that the sharp edges do not remove mortar from the plastered surface.

Dip the wood float in water regularly, but don't over-wet the mortar because it could come down or “sag”.

Take care that the plaster or render comes to the footings (here, to the foundations) and cut it off properly. The edges around openings and outside corners should be rounded or chamfered.

Before stopping work, make sure that the work is finished off properly and is clean. Someone should return in the evening and sprinkle water on the freshly made plaster or render. Water the plaster or render regularly in the next few days so that it cures properly.

The edge boards can be removed the next day.

- CURING: Watering the plaster or render is very important, especially during the dry season when the harmattan is blowing. Don't watt until the whole work is finished before you put water on the parts which were done first; the fresh plaster can dry out in a few hours.

If you started on the west side of the building in the morning, be sure to water those sections in the afternoon when the sun is shining on them.

Positions of edge boards for plastering corners

Below are illustrations of the correct method for plastering around corners. In Fig, la, the first step is shown; in Fig. 1b the second step. The arrows indicate the areas which are plastered in each step. The boards project by the thickness of the plaster.

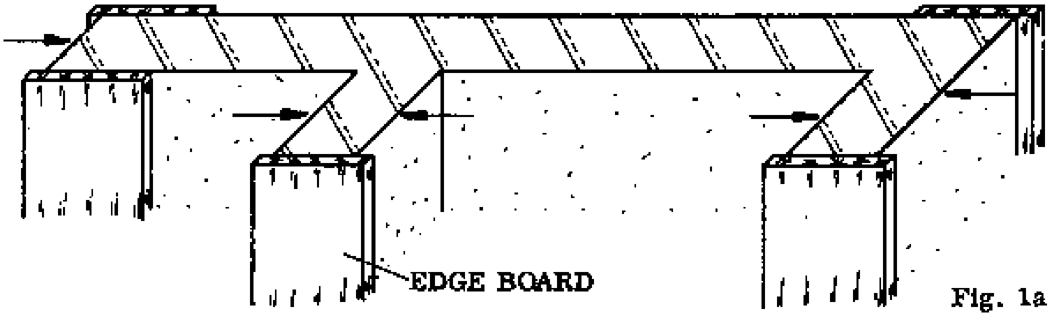

Fig. 1a

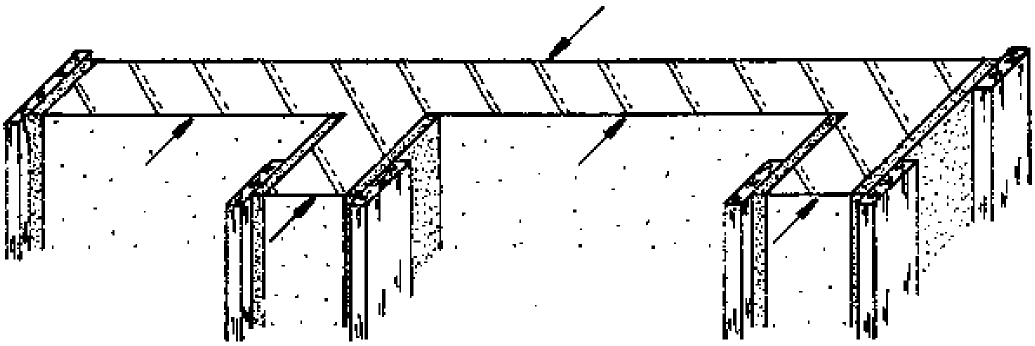

Fig. 1b

Positions of edge boards for plastering around frames

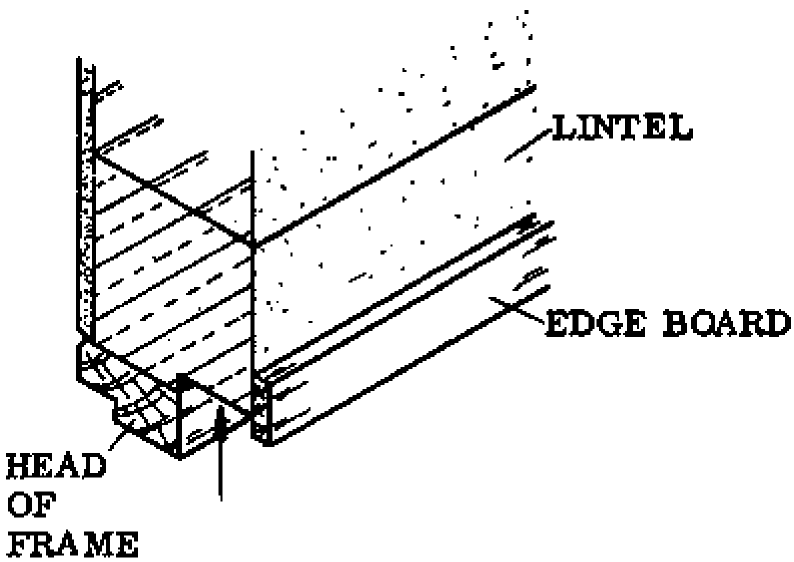

Fig. 2a 1st STEP

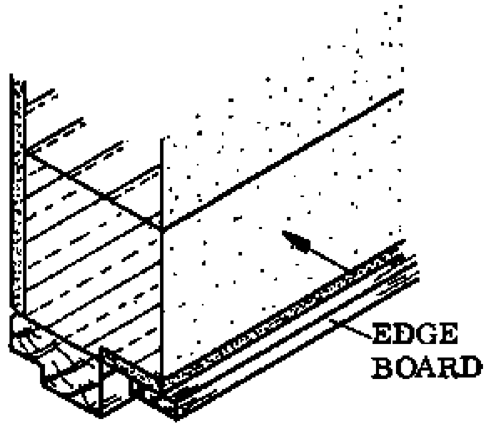

Fig. 2b 2nd STEP

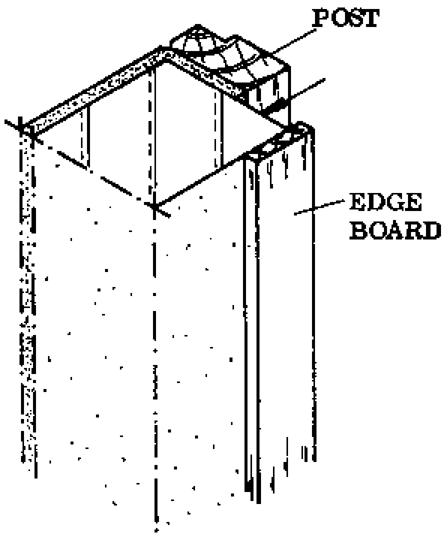

Fig. 3a 1st STEP

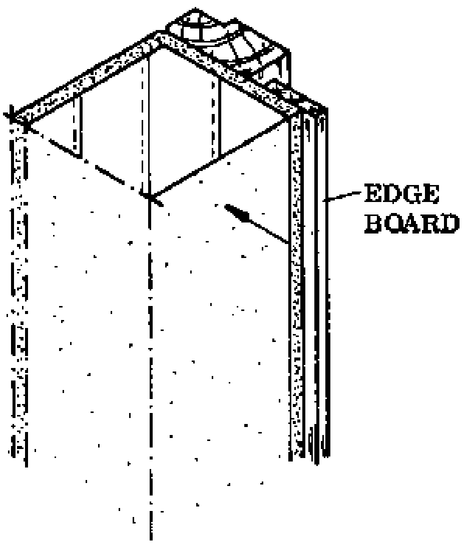

Fig. 3b 2nd STEP

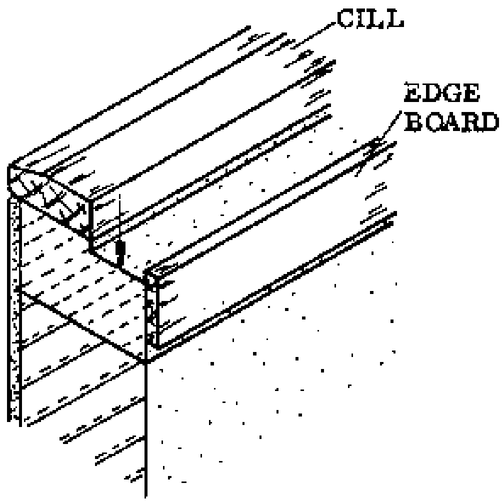

Fig. 4a 1st STEP

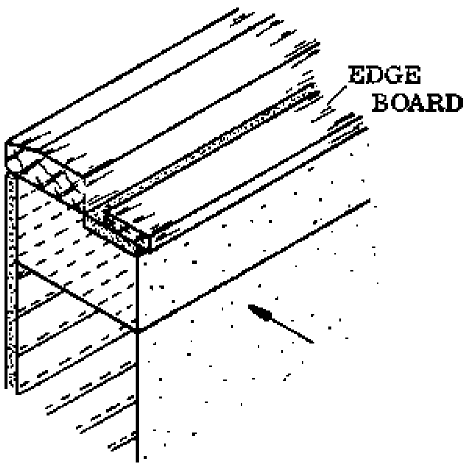

Fig. 4b 2nd STEP

Position of edge boards for plastering the tops of gables

Figs. 1a and 1b show the positions for the edge boards.

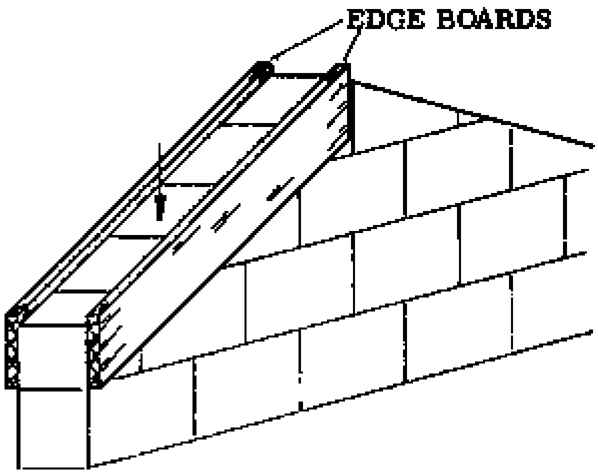

Fig. 1a 1st STEP

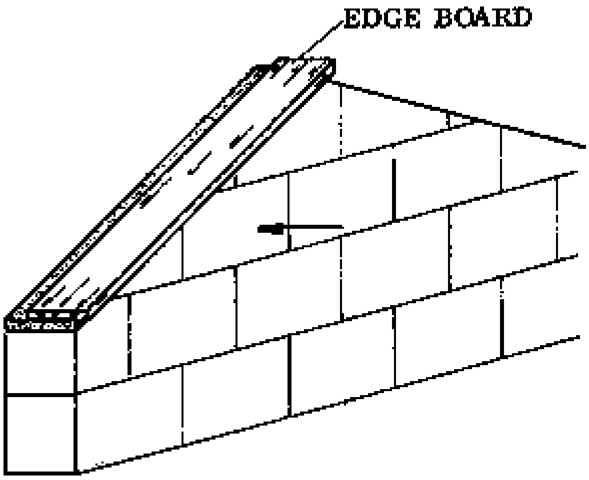

Fig. 1b 2nd STEP

NOTES:

Positions of edge boards for plastering the top of a parapetted pent roof

Figs. 2, 3, and 4 show the positions of the edge boards for plastering.

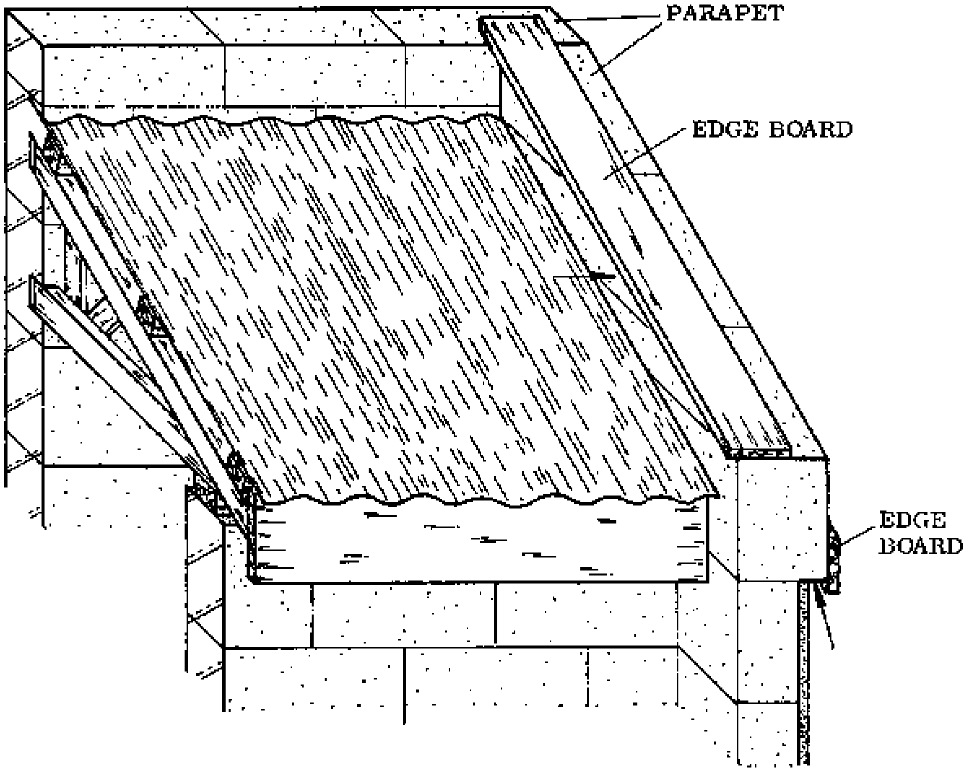

Fig. 2 1st STEP

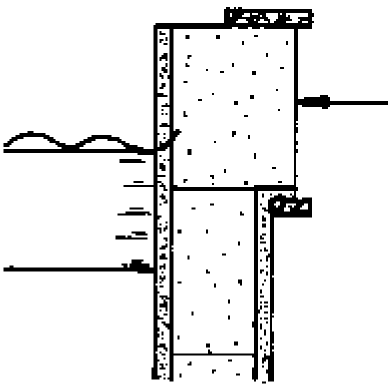

Fig. 3 2nd STEP

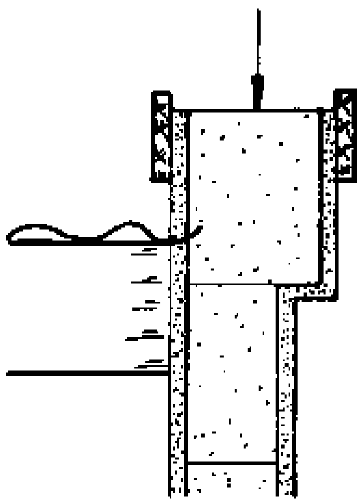

Fig. 4 3rd STEP

Positions of the edge boards for plastering openings

Plaster the inside surfaces of the opening first (Fig. 1), then the rest of the wall can be plastered as usual (Fig. 2).

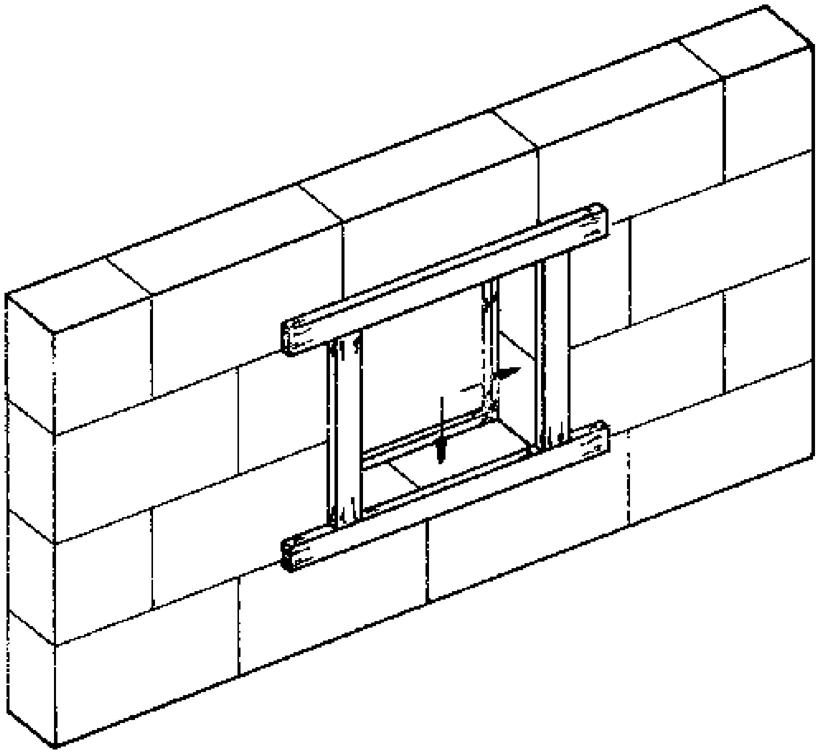

Fig. 1

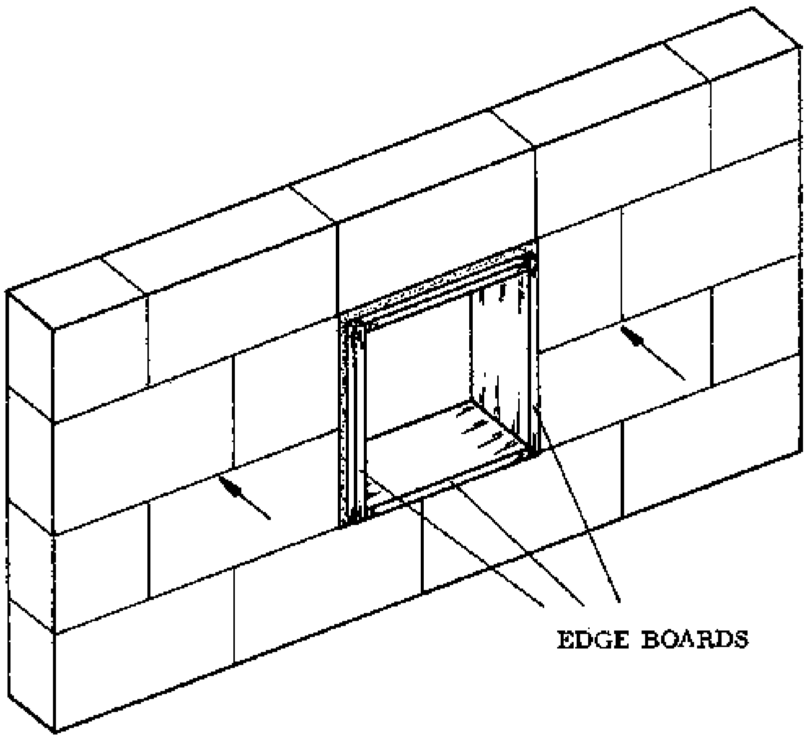

Fig. 2

FLOOR CONSTRUCTION

It is best to construct the floor after the roof covering has been completed. This makes it easier to cure the floor without problems caused by the concrete drying out too quickly and cracking.

Floors are constructed on top of the hardcore filling. There are two methods for floor construction used in Rural Building: one-course work and two-course work. One-course work means that the floor is made in a single layer; while in two-course work the floor is constructed in two layers, the base layer and the floor screed or finishing layer. For an explanation of the two methods and their respective advantages and disadvantages, see the Basic Knowledge book, page 179.

Any floor which is larger than 10 square metres should be divided into “bays” before it is cast (Basic Knowledge, page 180). The bays should be as nearly square-shaped as possible, so that the shrinkage on each side of the bay will be the same. The bays are separated from each other by edge boards during the casting. The smaller the bays, the fewer cracks will appear. In floors which are in the sun, the bays should be no more than 5 square metres in area, and expansion gaps should be made between them.

Expansion gaps and shrinkage gaps are explained in the Basic Knowledge book, page 183. Shrinkage gaps are made between the bays in either one-course or two-course work, to keep the floor from cracking as it hardens and shrinks a bit. Expansion gaps are larger gaps made in the base layer of two-course work when the floor is exposed to the sun or to large temperature changes, which can cause cracks when the floor expands with the heat and contracts as it cools.

The procedure for casting a floor is explained on the following pages.

NOTES:

Sequence of operations for one-course work

The hardcore filling is usually made well beforehand, to allow it to settle properly. It is constructed as explained on pages 59 and 60 in this book. The last 6 cm up to the top of the footings is filled with sand. The hardcore forms a firm support for the floor (Fig. 3).

a. Clean the whole area and level the sand surface (Fig. 1).

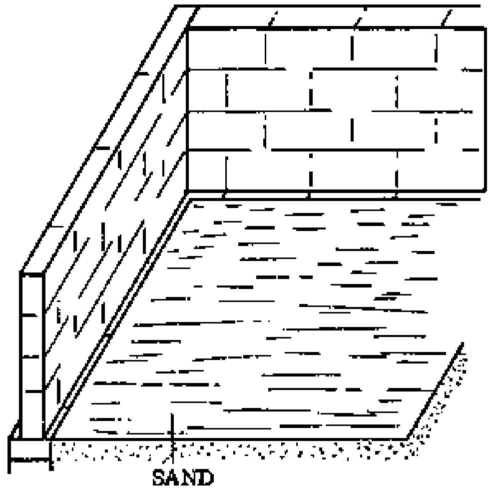

Fig. 1

b. Divide the area of the room into bays and mark the bays on the walls (Fig. 2).

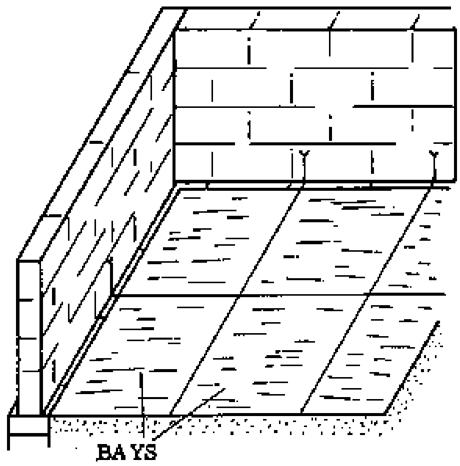

Fig. 2

c. Mark the positions of the edge boards on the sand between the marks on the walls (Fig. 2). Lines may also be fixed between the wall marks at the height of the finished floor level (Fig.. 3).

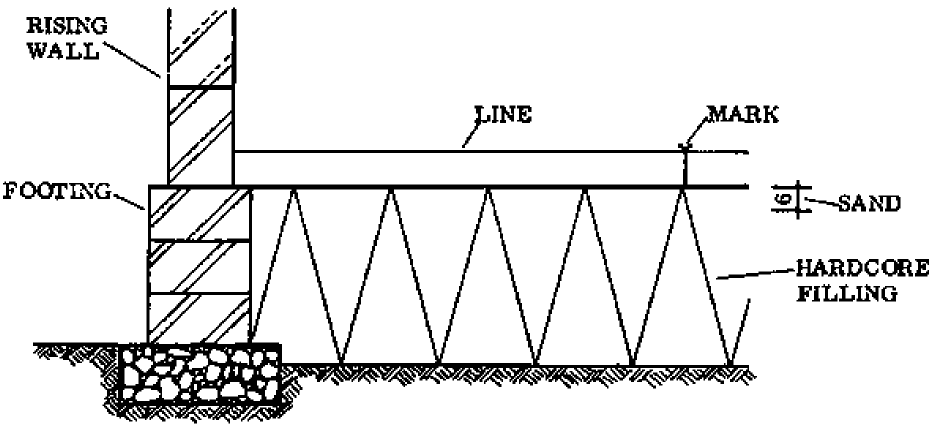

Fig. 3

d. Cut the edgeboards to the proper length. Note the arrangement of the boards shown above in Fig. 4 and in Fig. 6 below, and cut the boards so that they fit in this pattern.

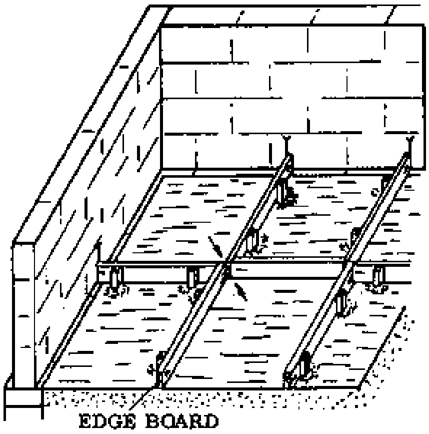

Fig. 4

e. Nail the pegs to the sides of the edge boards.

f. Place the edge boards as shown in Fig. 4, along the marks. The corners of the boards should meet as shown in Fig. 6 below.

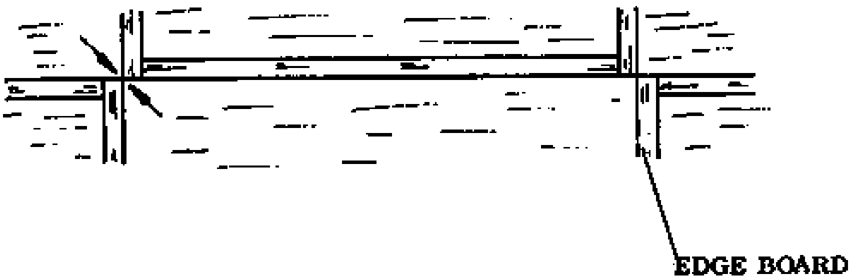

Fig. 6

g. Knock lightly on the pegs until the edge boards are level (check with the spirit level) and at the correct height (the tops of the boards should be level with the finished floor surface).

h. Pour the guide strips to the height of the base layer (approximately 8 cm) (Fig. 5). Level the tops of the guide strips (Fig. 7).

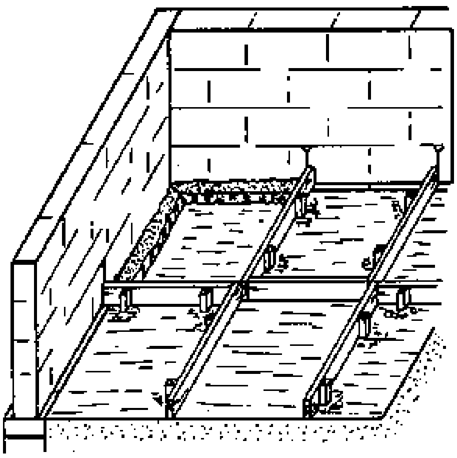

Fig. 5

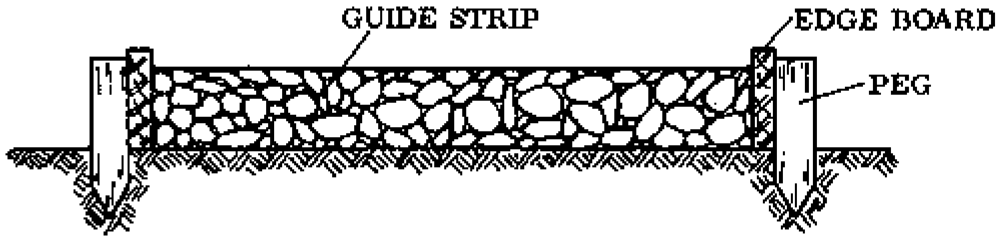

Fig. 7

i. Pour the concrete for the base layer of one bay, making sure that it is well distributed near the walls and corners especially. Mix proportions can be found in the Tables of Figures, Reference Book, page 234 (Fig. 1).

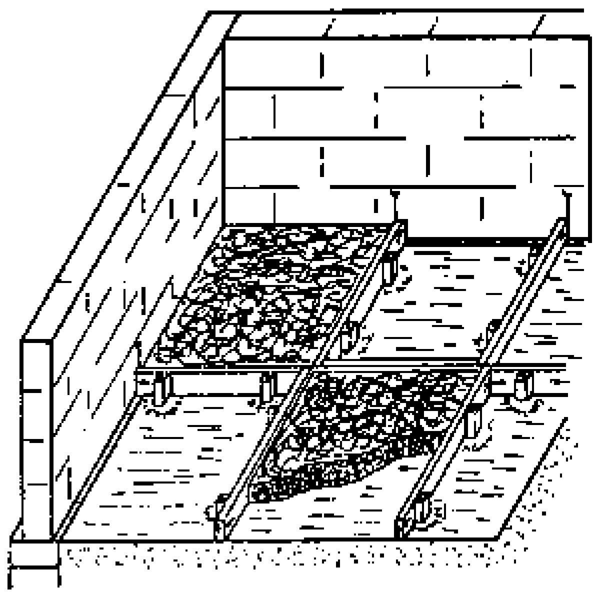

Fig. 1

j. Compact the concrete with a rammer, especially the corners and edges.

k. Use the notched strike board (Fig. 3) to level the surface by gently tamping until the layer is screed-thickness below the top of the edge boards.

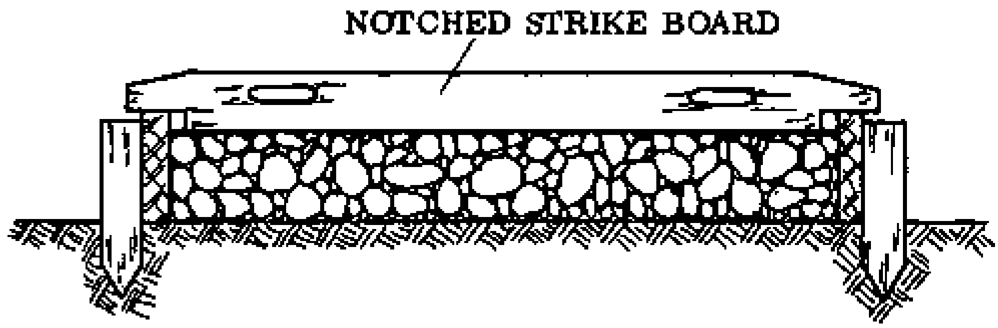

Fig. 3

l. Prepare the mortar for the screed layer. This should be moist but not wet.

m. Pour this mortar on top of the concrete. The screed is about 2 cm thick.

n. Tamp the screed down with a strike board until a level surface is obtained (Fig. 2).

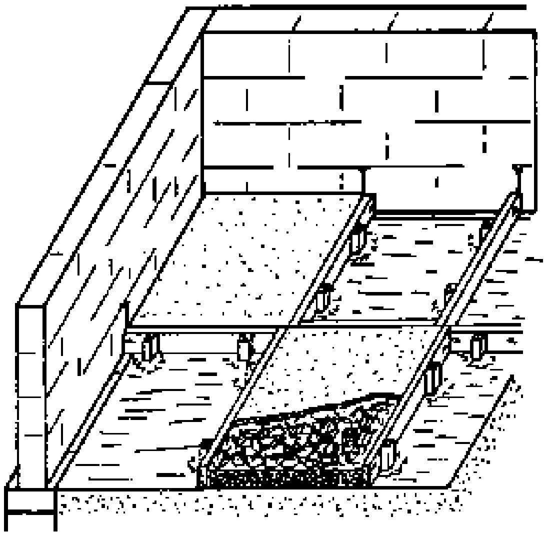

Fig. 2

o. Use the wood float to tamp the screed until the moisture from the concrete comes through. At the same time smooth the surface with the float. During this operation dip the float regularly in water and sprinkle water on top of the screed if necessary to make the work easier.

p. If a smoother surface is desired, finish off with a steel float. Make a chamfer along each edge next to the edge board to form half of the “V” groove above the shrinkage gap (Figs. 4 & 6).

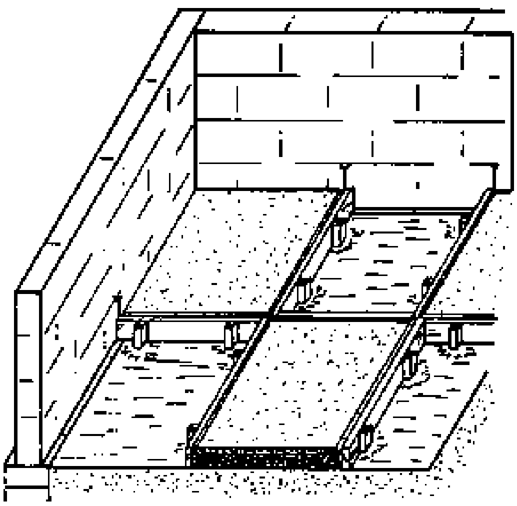

Fig. 4

Fig. 6

q. If blisters or bubbles appear when the concrete starts to harden, pop them and close the holes.

r. Let the floor harden for some hours, then sprinkle water over it. Keep the floor wet at all times.

s. The next day, put some clean sand on top of the floor and wet it thoroughly. Keep the sand wet until the hardening process is over in several days time.

t. Remove the edge boards and cast the remaining bays in the same way. Make sure that the bays are separate by putting pieces of plastic or paper between them before pouring the concrete in the other bays (Fig. 5). The tops of the finished bays act as guides for the strike boards, but be careful not to damage them (Fig. 7).

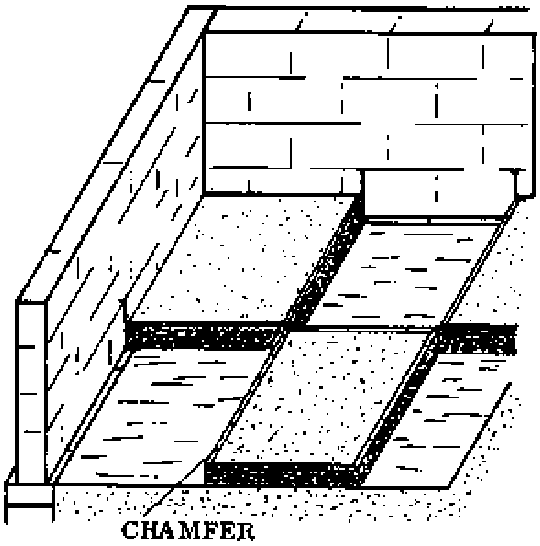

Fig. 5

Fig. 7

Verandah floors

The construction of a verandah floor is different from that of an inside floor in three particular ways.

- Usually the verandah floor is built with a small slope towards the outside so that rain water can run off quickly (Fig. 1, a).

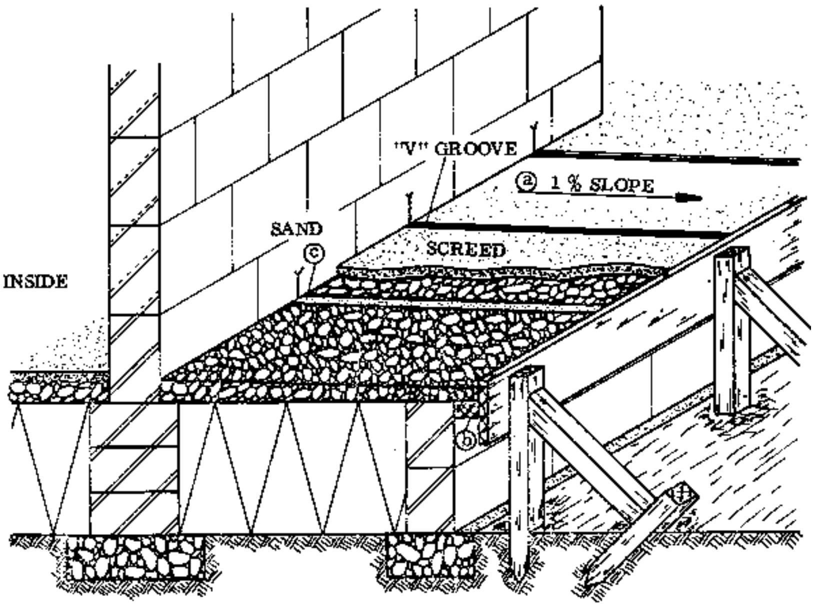

Fig. 1

- The verandah floor can have a projecting outside edge (Fig. 1, b).

- Because the floor is exposed to the sun, expansion gaps have to be made in it. This means that the floor must be made with the two-course method. (Fig. 1, c, and Basic Knowledge book, page 183).

- SLOPING FLOOR: Verandah floors may have a slope which is about 1%; no more than 2%, because this could cause problems in walking and working on it. The greater slope increases the danger of slipping when the surface is wet.

A slope of 1% means that the floor slopes 1 cm lower in every metre; in this case the slope is across the width of the floor.

The construction of the slope is done by simply setting the edge boards between the bays at the required slope.

- PROJECTING OUTSIDE EDGE: If the outside edge of a verandah floor is kept flush with the render of the footing (Fig. 2), then cracks would soon appear along the edge. This is prevented by constructing the floor so it projects past the footing by no more than 7,5 cm. The shorter the projection the better, because the floor is not reinforced.

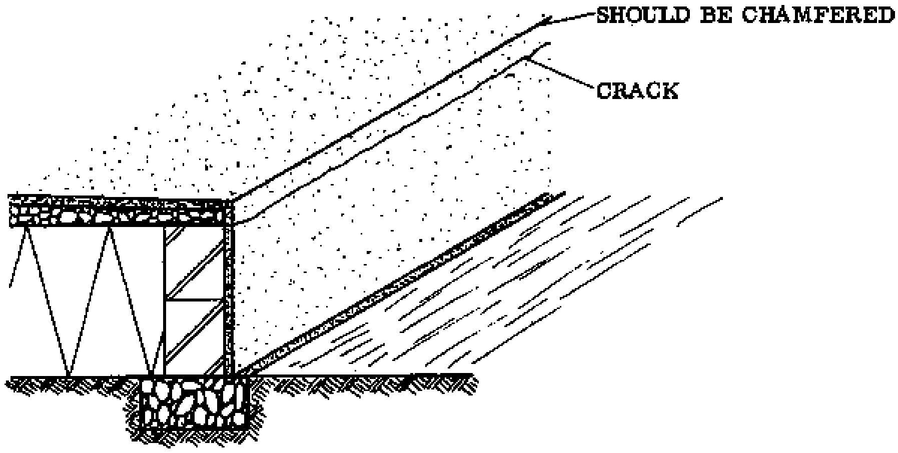

Fig. 2

NOTES:

STAIRS

A stair means a series of at least three steps, also called a flight of stairs. A stair can form the link between two storeys of a building. In Rural Building we are only concerned with one storey buildings, so the stairs are usually only needed up to the level of the floor of the building, which is normally not much higher than 60 cm above ground level.

- TECHNICAL TERMS: Fig. 1 shows the parts of a staircase.

  - TREAD: The tread is the horizontal part of the step (a).

  - RISER: This is the vertical part of a step (b).

  - GOING: This refers to the width of the tread (c). The “going” of a flight of steps is the sum of the “goings” of all the steps of the flight.

  - RISE: This is the vertical distance between two treads, equal to the height of the riser (d).

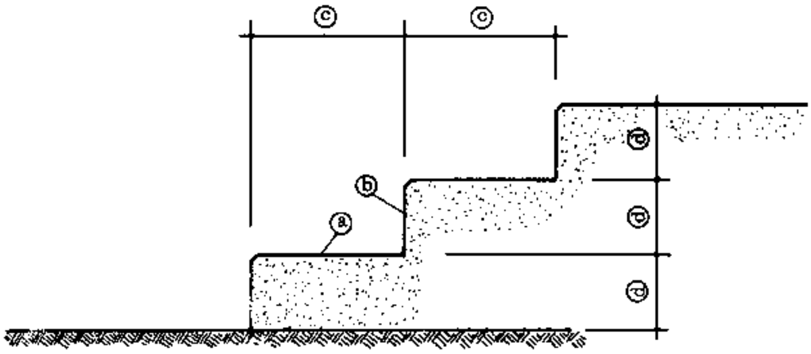

Fig. 1

Requirements

The short flights of stairs we make in Rural Building are usually built with sandcrete blocks or are cast out of concrete. Regardless of the materials and the method of construction, the steps must be all the same height and the same width. A staircase with steps of different sizes is likely to cause accidents.

The rise of the steps is usually 15 cm (approximately) and the width of the tread, the “going”, is usually about 30 cm for each step.

The steps in Fig. 2 are built with sandcrete blocks, so the rise of 17 cm is convenient because it fits in with the block size. The width of the tread can be about 28 cm, or slightly more than the half-block size.

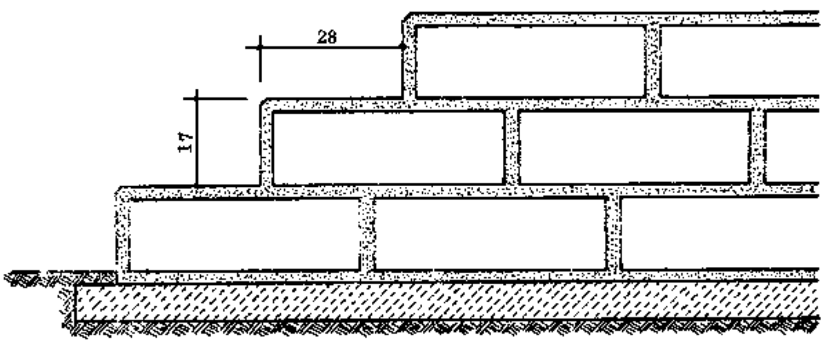

Fig. 2

Steps cast out of concrete can have any convenient rise, but normally the rise is about 15 cm high, and the width of the tread will be approximately 30 cm. The formwork for casting the steps is shown in Fig. 3.

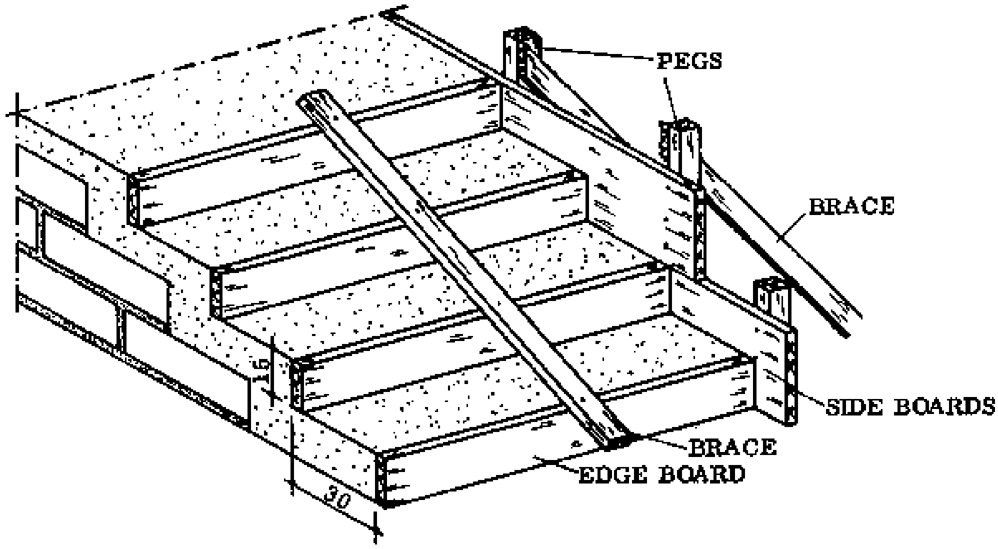

Fig. 3

Plan ahead. If the steps with a 15 cm rise do not reach the right level (measure the height before you start to make the steps) either change the height of the rise (to 14, 16, or 17 cm, etc); dig out some soil before to lower the height of the whole stair; or add a foundation slab to raise the whole construction by a few centimetres to the required height.

- REMEMBER: Never make steps of different sizes in the same stair.

FORMWORK

Formwork for copings

A free-standing wall which is not part of the building (not under the roof) needs to be protected against rain, which otherwise might penetrate at the top of the wall and damage it. This is done by adding a “coping” at the top of the wall.

- SADDLE-BACK COPING: This is placed on top of the wall as shown in Fig. 1. The formwork for the coping is shown in Fig. 2. The drip or throating is made by setting two pipes or smooth iron rods in the wet concrete. The correct position can be assured by using wooden spacers tied to the pipe (Figs. 2 & 2a).

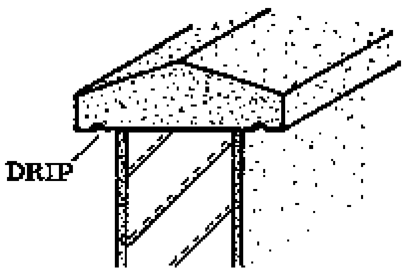

Fig. 1

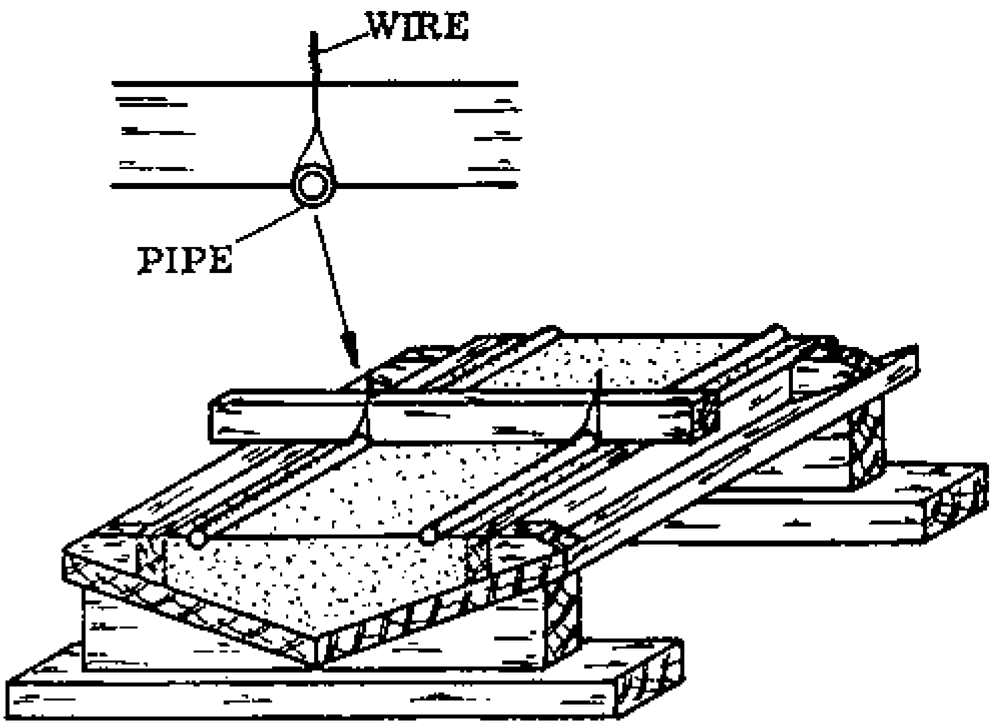

Fig. 2 & Fig. 2a

A second way of making the coping is shown in Fig. 3. A line is fixed at the height of the ridge and the surfaces are shaped with the steel float. The drip is made by fixing half-round beads onto the soffit board of the formwork (Figs. 3 & 3a).

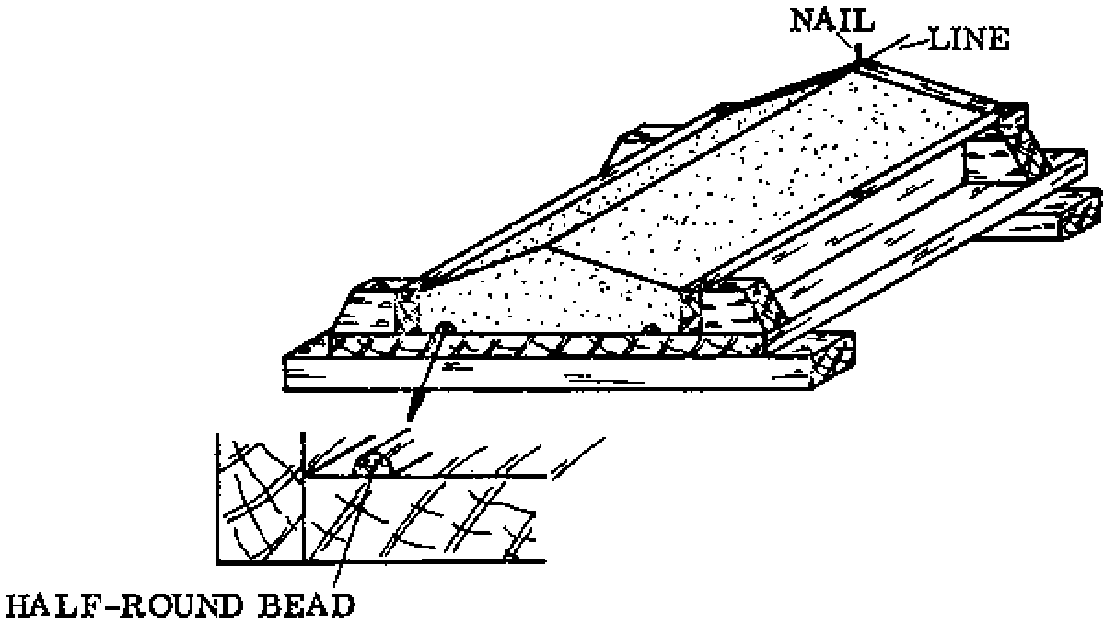

Fig. 3 & Fig. 3a

- SPLAYED COPING: The splayed coping in Fig. 4 can also be made in two ways, in a fashion similar to the saddle-back coping above (Figs. 5 & 6).

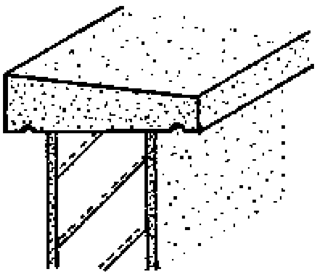

Fig. 4

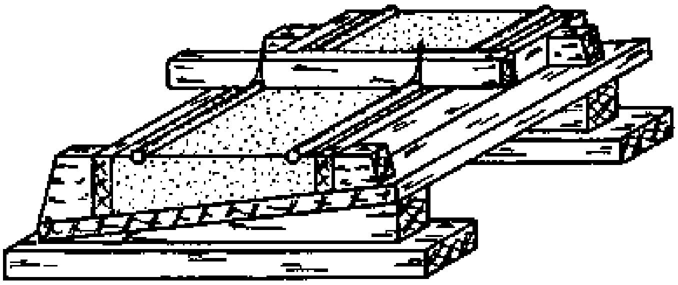

Fig. 5

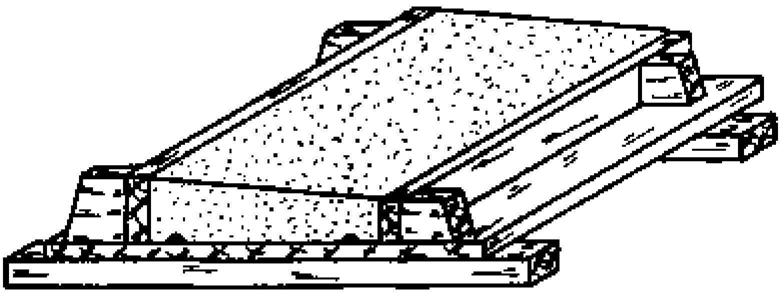

Fig. 6

Formwork for pillars

The formwork for a concrete pillar is shown in Fig. 7 below.

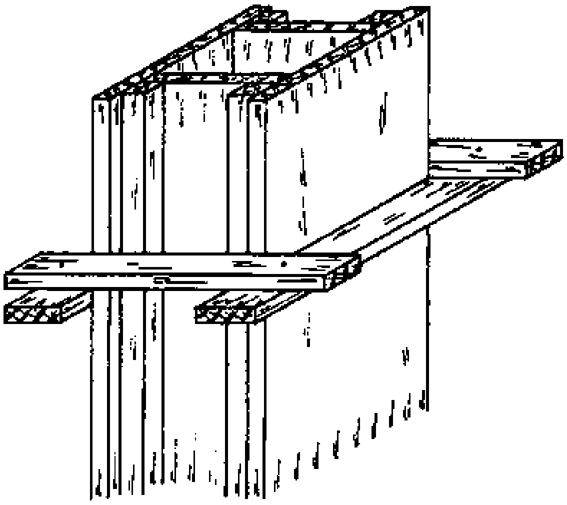

Fig. 7

Formwork for slabs

Fig. 1 shows an example of formwork for a slab. Paper should be set underneath before the concrete is cast.

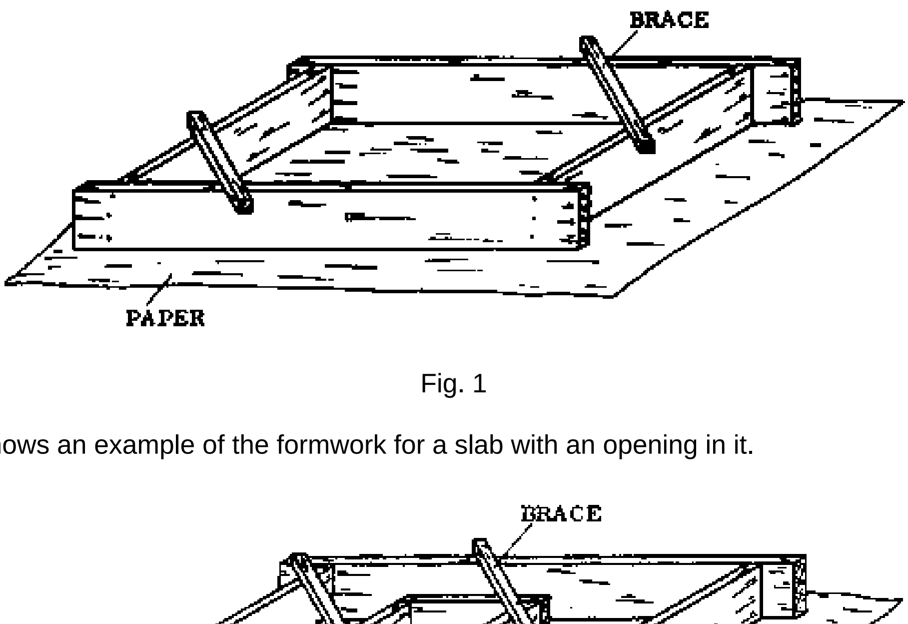

Fig. 1

Fig. 2 shows an example of the formwork for a slab with an opening in it.

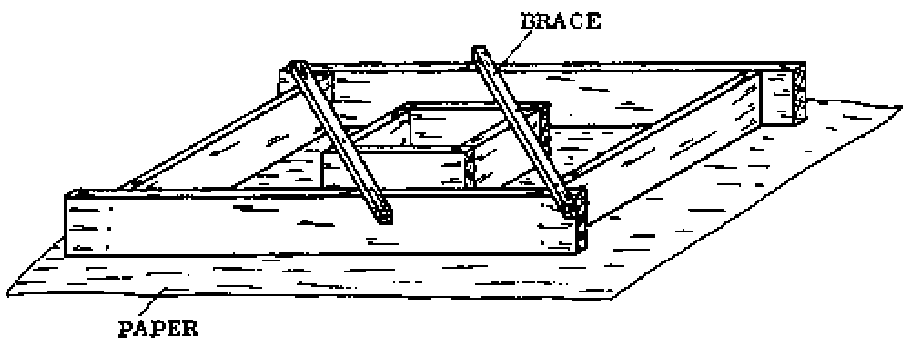

Fig. 2

General hints for formwork

- Use good, straight-grained wood.

- Make a sketch of the formwork before you start to make it.

- Design the formwork so it can be easily removed from the piece after curing.

- Use enough supports and braces to make the formwork rigid and strong.

- Be aware that the wood swells when it is in contact with the wet concrete.

- If the concrete will not be plastered later, plane the formwork members smooth where they are in contact with the concrete.

- Do not overnail the structure, and fix the nails so that they can be taken out easily.

- Oil the form lightly where it is in contact with the concrete.

- For precast members, put the form on the ground in a level spot, and put paper underneath it (old cement bags).

- Remove the formwork only when the concrete has hardened sufficiently (the time depends on the member which is cast).

- Be careful not to damage the edges and corners of the concrete piece when you remove the formwork.

- Clean off the formwork with a steel brush and take out all nails when you finish.

NOTES:

REINFORCED CONCRETE SLABS

In the northern part of Ghana a typical traditional house has a flat roof made of mud plastered over sticks, and supported by tree trunks. The flat roof is very appropriate for the area, but sometimes these traditional constructions have problems like leaking or even collapse during heavy rains.

In Rural Building we do not deal with the construction of flat roofs, even though these would be more appropriate to the local customs. The reason is because the materials to construct a safe, strong flat roof are expensive, and the construction of a reinforced concrete roof is very difficult and complicated.

Therefore, in this course we only treat the construction of relatively small reinforced concrete slabs such as manhole covers, latrine slabs, septic tanks, etc.

Construction

Reinforcement mats are a simple way of reinforcing slabs (Reference Book, page 173) but they are sometimes hard to obtain and they are expensive. The Rural Builder usually has to rely on single reinforcement bars to reinforce slabs.

Fig. 1 shows a typical arrangement for a circular slab, and Fig. 2 shows that for a rectangular slab.

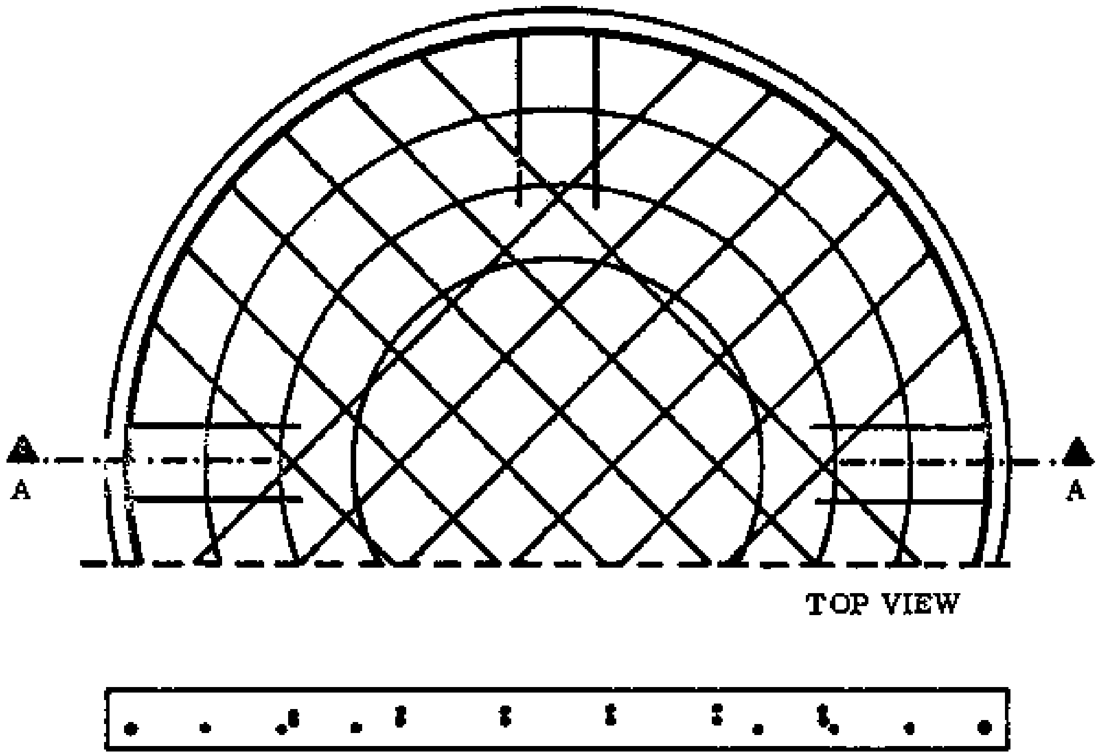

Fig. 1

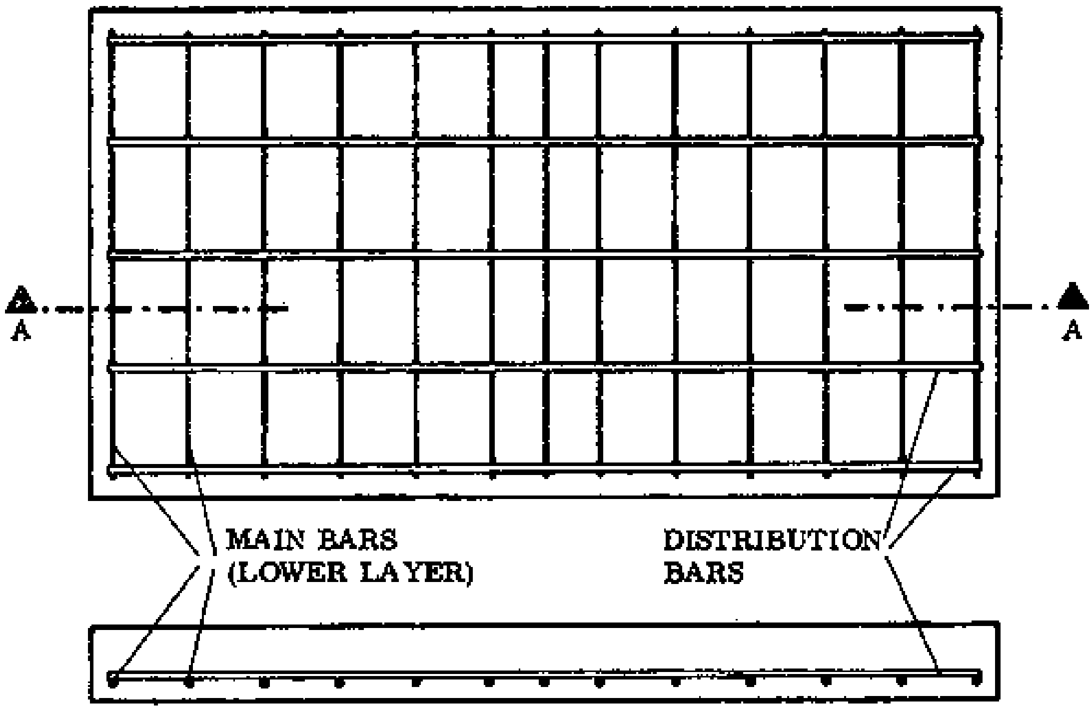

Fig. 2

The distance between the 12 mm main bars is never more than 10 cm. The thickness of the slab can vary between 7,5 cm for smaller slabs like manhole covers, and up to 15 cm for covers of septic tanks, or slabs on which people may walk.

- NOTE: This book is not meant to train engineers; it merely gives basic information. If you need to construct a larger reinforced concrete member, you are advised to seek help from a building expert.

NOTES:

HANGING DOORS AND WINDOWS

The first step in hanging a door is to make sure that the posts of the door frame are plumb. If the posts are not plumb the door will not hang properly. A door should remain in position, either open or closed, without the aid of a stop. It should not swing open or closed by its own weight. The same applies for window casements.

If the door posts are not plumb, the only solution is to fix the hinges in positions such that the door itself hangs plumb.

Hanging a door with butt hinges

Before you read the following section, look up butt hinges in the Reference Book, pages 219 to 221.

- SEQUENCE OF OPERATIONS:

a. Set the door into the door frame.

b. Check whether there is a sufficient clearance all around the door (at least 3 mm, more in the dry season).

c. Mark the positions of the hinges, then take the door down and mark the length of the hinges on the door (Fig. 1).

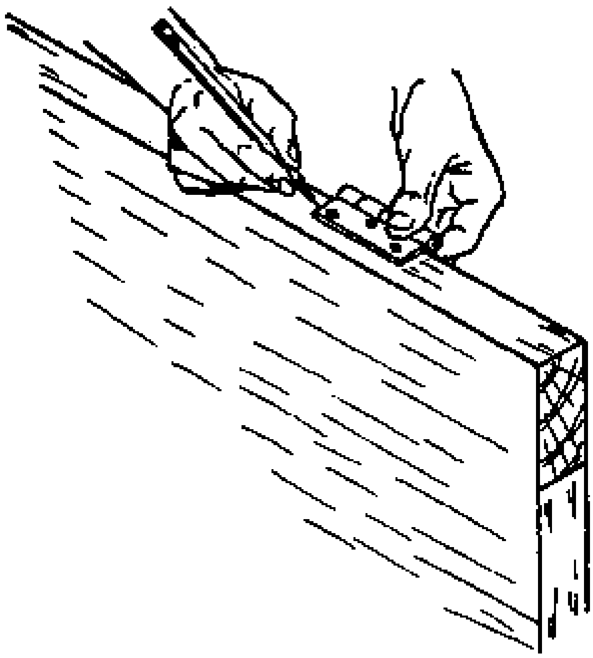

Fig. 1

d. Set the marking gauge from the middle of the pin of the hinge to the edge of the hinge leaf, and mark the distance on the edge of the door (Fig. 2).

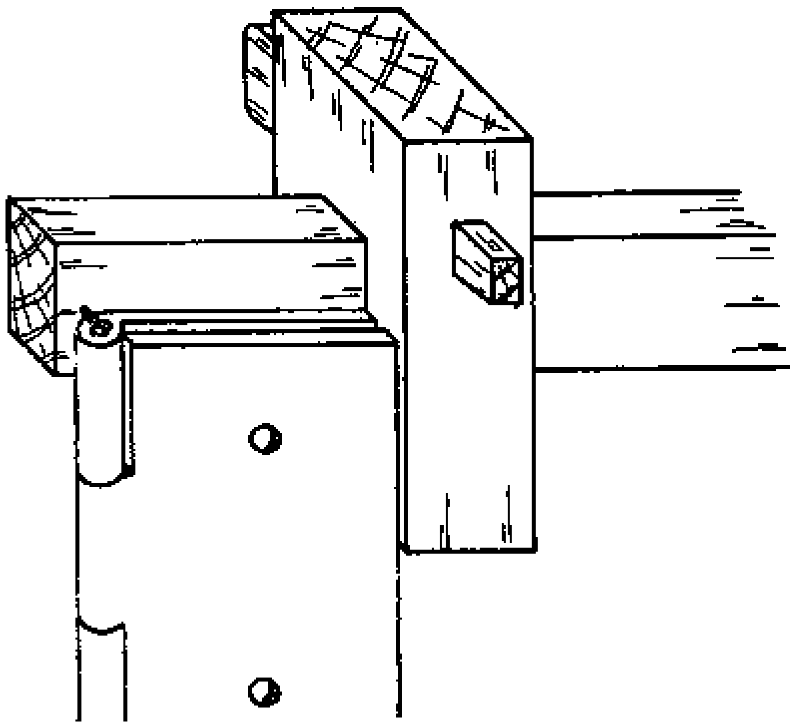

Fig. 2

e. Set the marking gauge to the thickness of one hinge leaf, and mark this on the face of the door (Fig. 3).

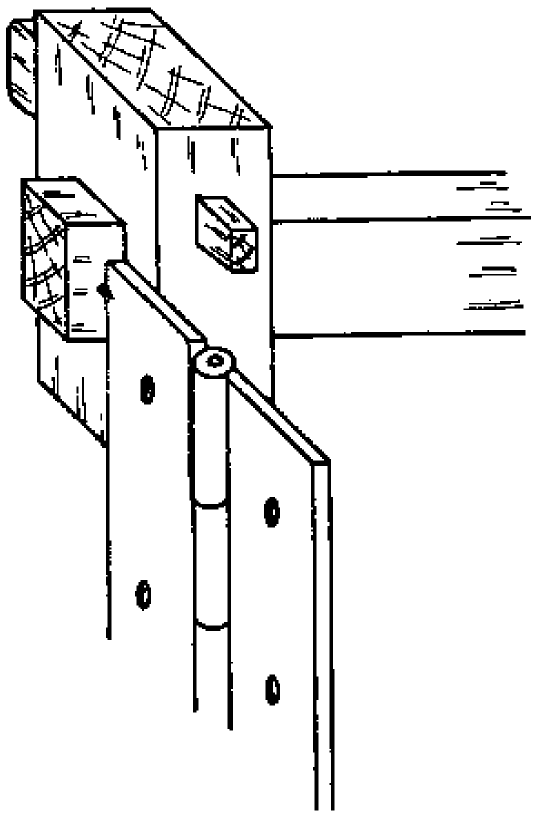

Fig. 3

f. Chisel the recesses for the hinges in the door, and fix each hinge with one screw (Fig. 4).

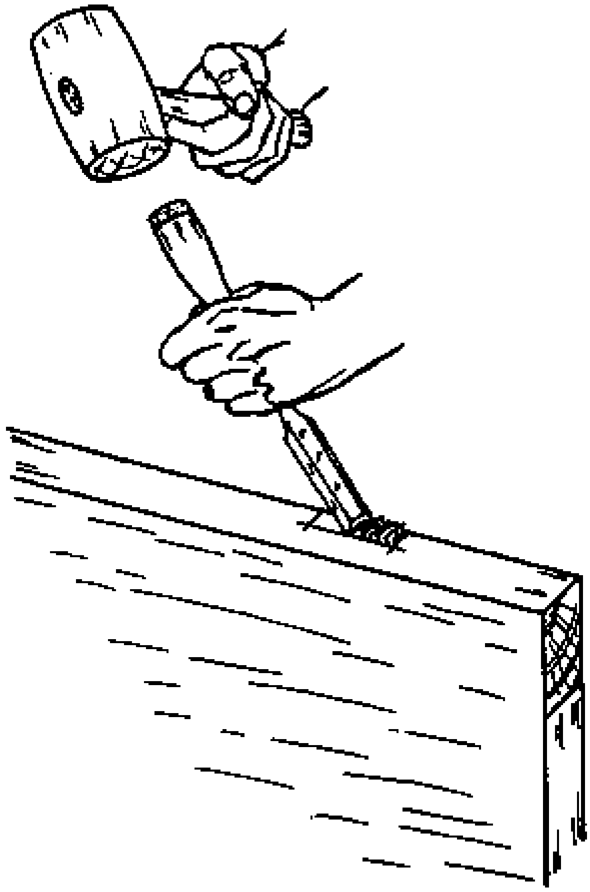

Fig. 4

g. Place the door in the door frame so that there is equal clearance around all the edges. A few thin pieces of wood between the door and frame will help to keep it in place.

h. Mark the positions of the hinges on the post. Remove the door.

i. Mark the depth and width of the hinge recess on the post, using the marking gauge.

j. Chop the recesses in the post.

k. Place the door in position and fix it to the door post with one screw in each leaf of the hinges. Close and open the door several times to see if it works smoothly. Notice in particular whether the door closes completely and does not scrape either post. It should stay closed by itself.

The same sequence as above also applies for casements.

- ADJUSTMENTS OF THE HINGES: Below are some tips for getting a door or casement to close properly.

- If one hinge recess is deeper than the other, loosen the screws and pack the deeper recess with thin strips of wood, until the depths of the recesses are the same.

- When a door binds (catches or rubs) on the hinge post, insert thin pieces of wood at the face edge of the hinges (near the pin) until the problem is relieved (Fig. 1). A strip about 1 cm wide and as long as the hinge will do.

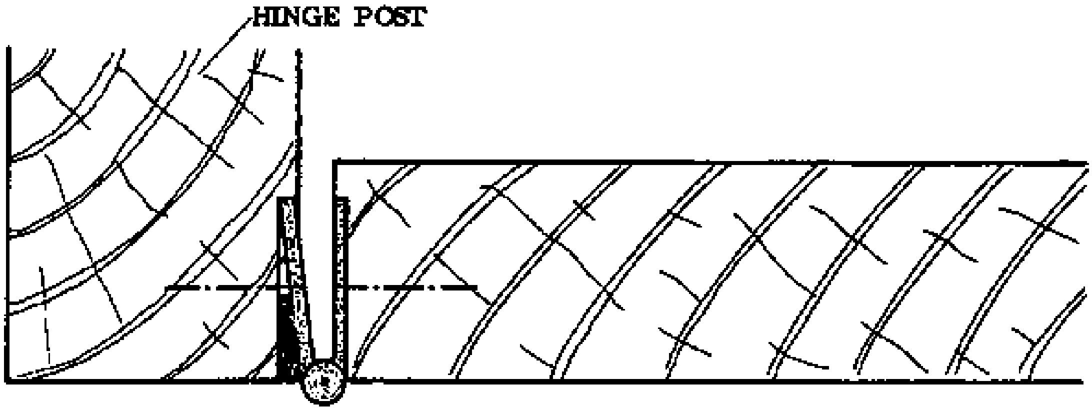

Fig. 1

- When a door binds on the locking post, insert the wood strip at the back of the hinge, to force the door away from the lock post (Fig. 2).

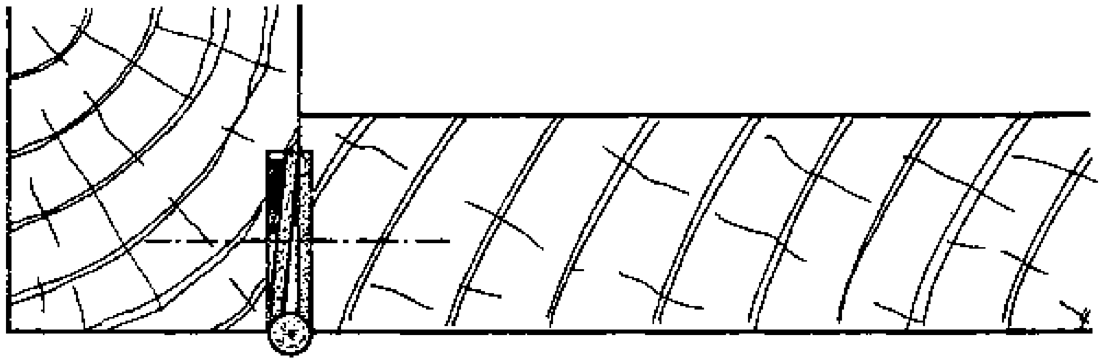

Fig. 2

- If the wood strips are not enough to relieve the problem, you will have to re move the door and plane something off, alter the hinge recesses or even move them a bit up or down.

- One possible reason that a door won't close well is that it is hinge bound/This means that the leaves of the hinges are set too deep. To remedy this, you must remove the hinge and place a thin piece of wood between the leaf and the post (Fig. 3).

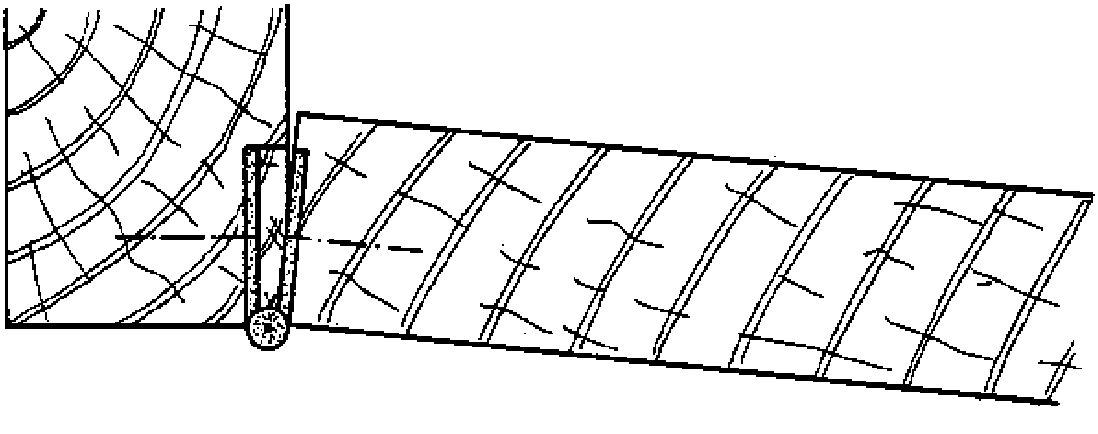

Fig. 3

- When the hinge is screw bound, the heads of the screws obstruct the door so that it can't close properly. This is often the case when the screws are too thick for the hinges, or the heads are too large. The only remedy is to fix the correct screws (Fig. 4).

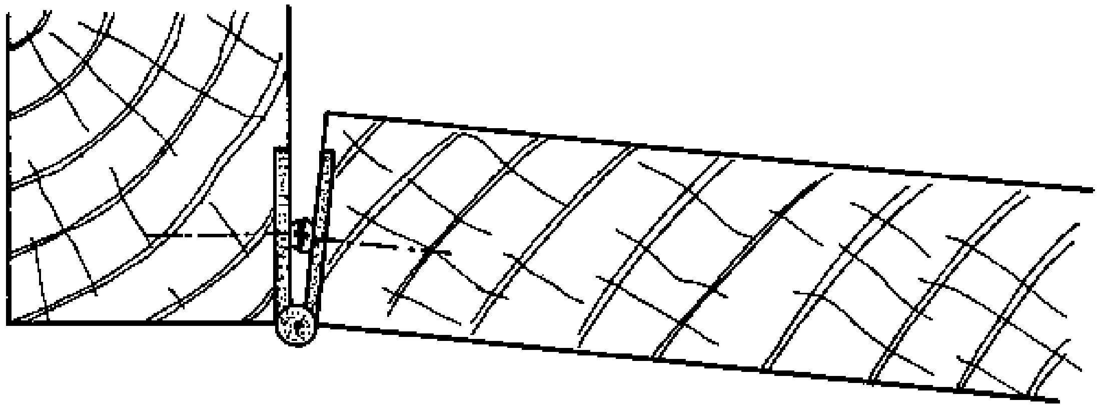

Fig. 4

NOTES:

LOCKS AND FITTINGS

Mortice lock

Before you read this section look up mortice locks in the Reference Book, pages 221 to 223. Pay attention to the names of the parts of the lock.

- SEQUENCE OF OPERATIONS FOR INSTALLING A MORTICE LOCK:

a. Place the door on edge against the side of the work bench, with one face against the bench and with the shutting stile upwards.

b. Mark the distance from the bottom edge of the door to the centre of the “bush” (the bush is the hole where the handle fits through, normally it is 105 cm from the bottom edge of the door).

c. Square the positions of the key hole and the bush on the face and edge of the door.

d. Set a marking gauge with the distance from the outside edge of the lock face plate to the centre of the key hole. Add 2 mm allowance for planing off later.

e. Mark this gauge setting on the door.

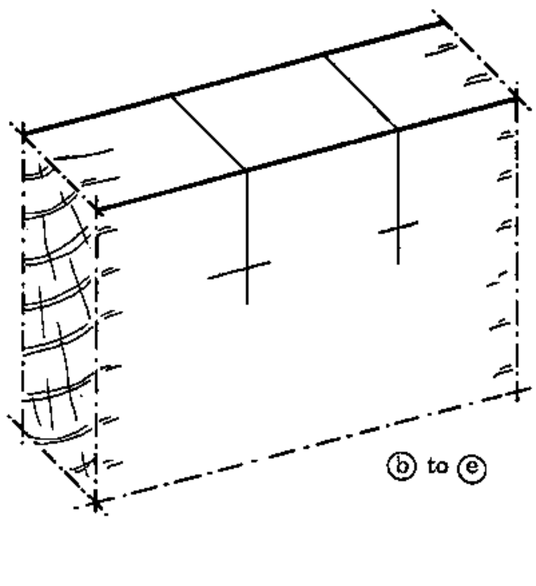

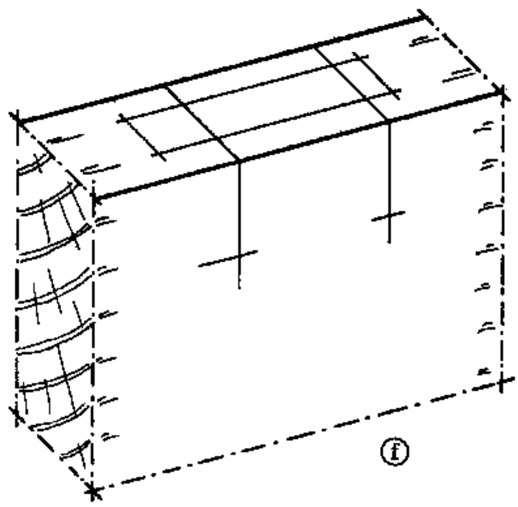

f. Mark the position of the lock stock onto the shutting edge of the door.

g. Clamp a piece of waste wood under the door to prevent splintering. Drill the bush hole and the keyhole. Complete the slot for the key hole with a chisel.

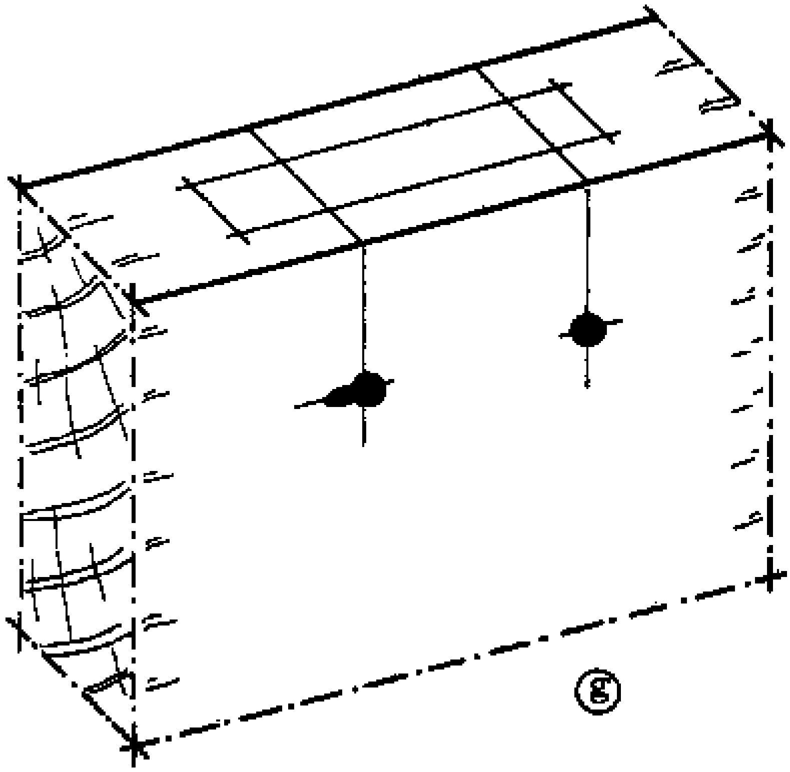

h. Chop the recess for the stock with a mortice chisel. Much of the waste can be bored away with a drill. Take care that the stock fits tightly against the sides of the mortice.

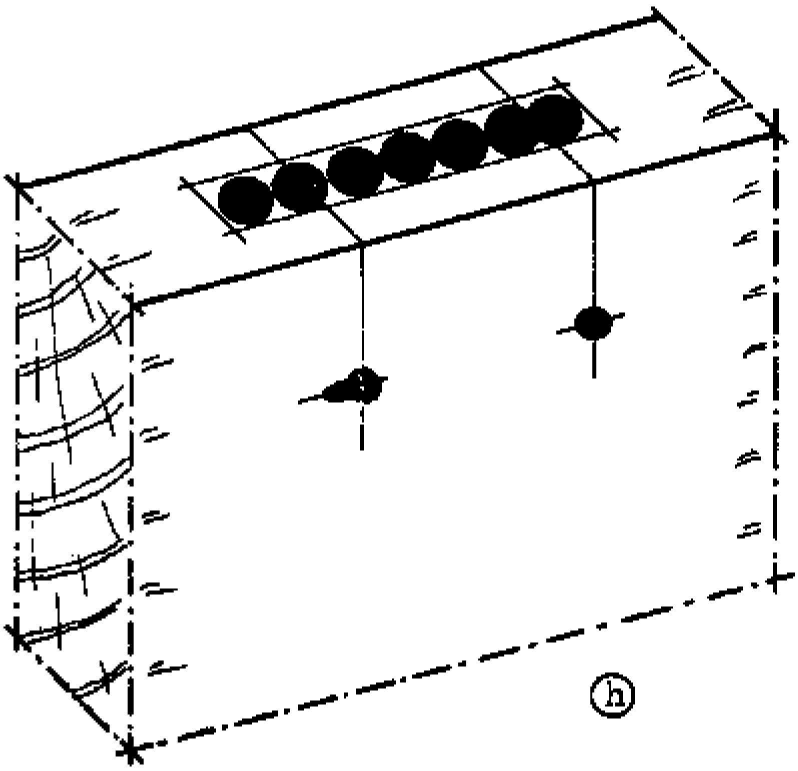

i. Drop the lock in the mortice and mark the position of the face plate on the door edge. Remove the lock.

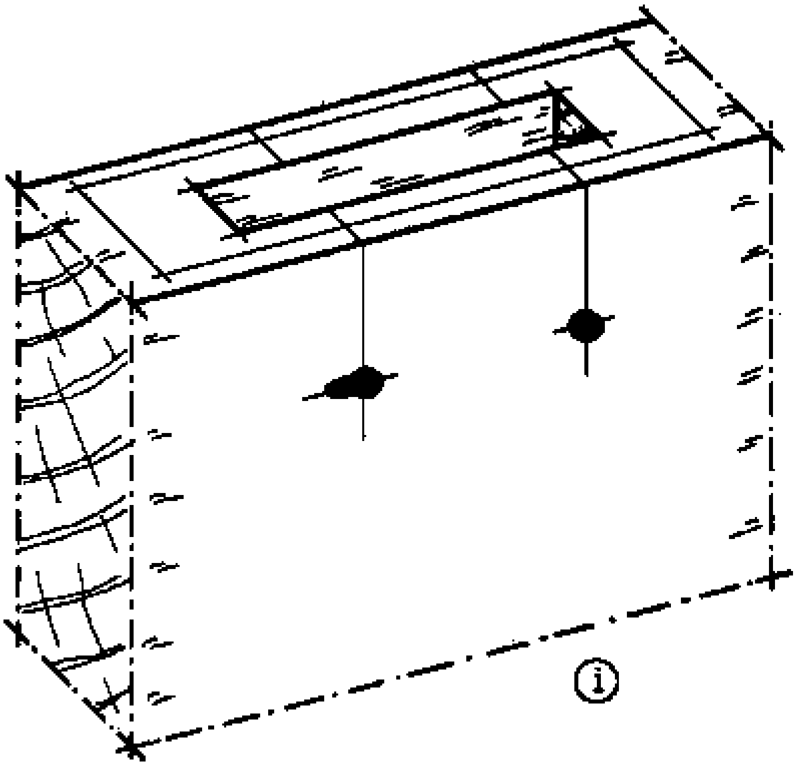

j. Chop the recess for the face plate with a mortice chisel.

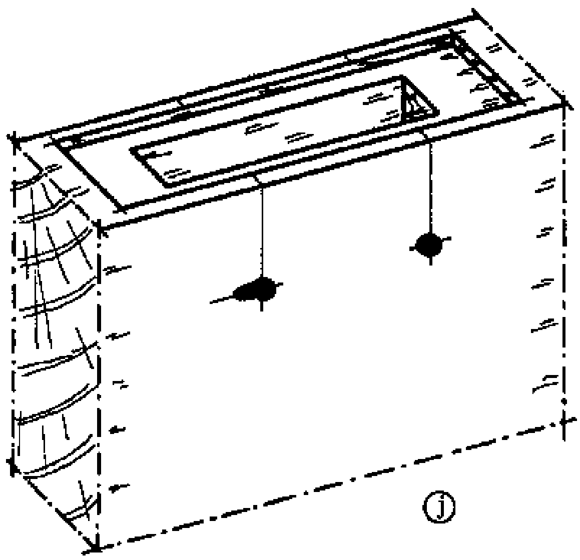

k. Drop the lock in again and insert the key and the handle with the fixed spindle. Check that there is nothing blocking the key and handle.

l. Attach the lock with screws.

m. Hold one leaf plate in position on the outside of the door. Insert the key and the handle with the spindle.

n. Attach the leaf plate to the door with screws.

o. Fix the leaf plate on the other side of the door in the same manner.

p. Secure the loose handle onto the spindle, with the pin.

The installation of a mortice lock with a cylinder is similar to the above procedure; but instead of a key hole, a hole is drilled for the locking cylinder.

- SEQUENCE OF OPERATIONS FOR INSTALLING THE STRIKING PLATE:

a. Set the door with the mortice lock into the door frame.

b. Mark the position of the latch bolt onto the door frame.

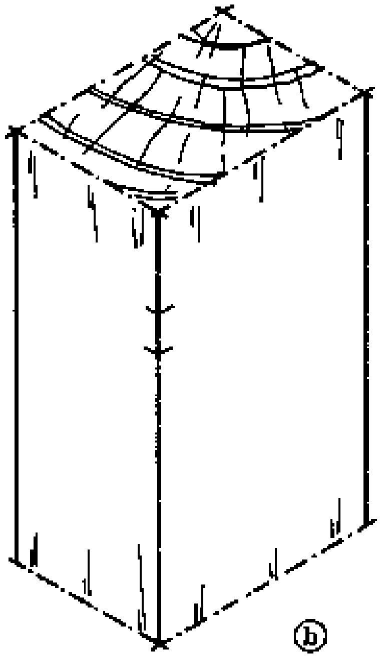

c. Hold the striking plate to the post in the correct position and mark the position on the post.

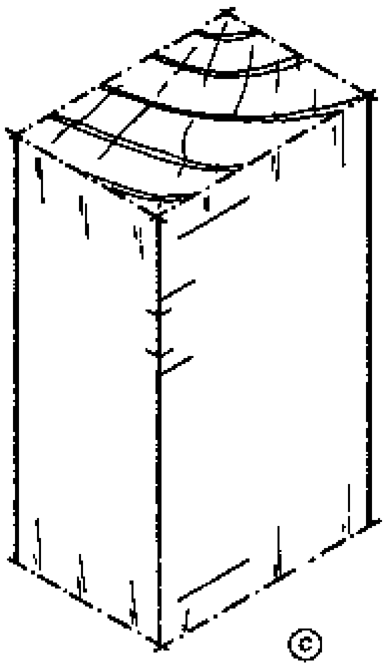

d. Set the gauge and use it to mark the vertical lines.

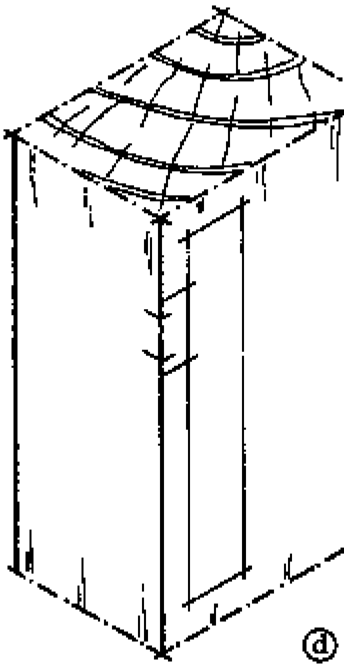

e. Cut the recess for the striking plate.

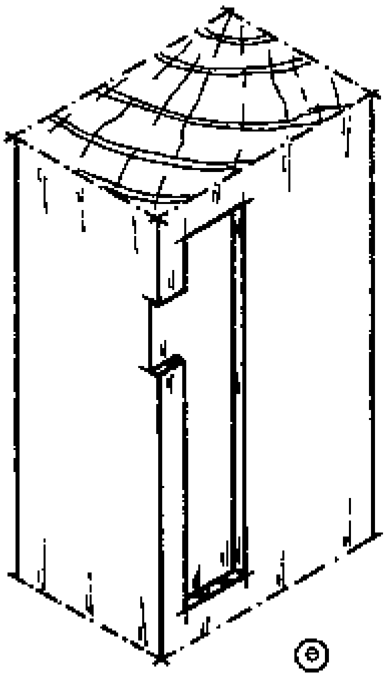

f. Fasten the striking plate to the post with screws.

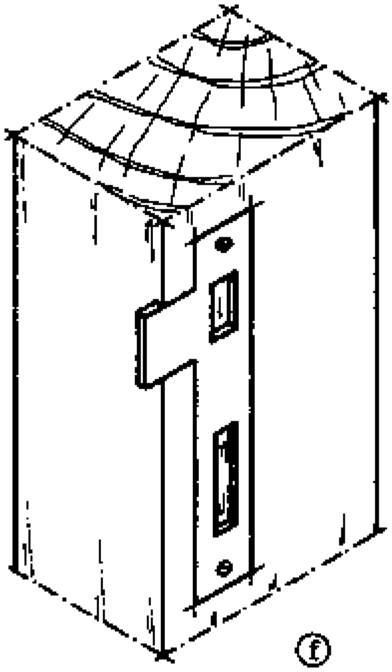

g. Chop the recesses for the latch bolt and the lock bolt while the striking plate is in position.

h. Cut off the projecting lug of the striking plate (arrow).

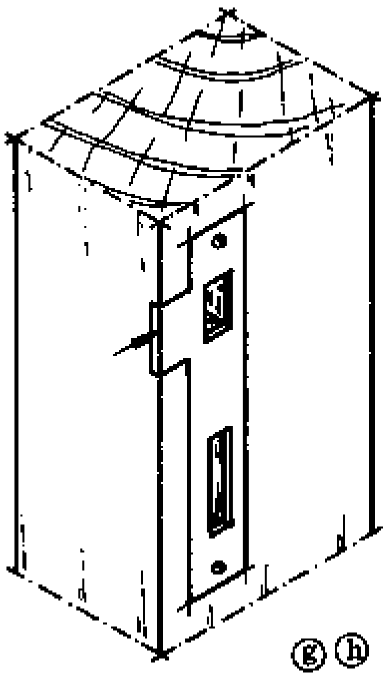

i. Close the door and check whether the latch bolt and the lock bolt can move freely and fit into their recesses.

In the case of a door frame with beads, the beads can be fixed after the door is properly hung and the locks installed.

Rim lock

Look in the Reference Book, page 225, for information about this type of lock and its parts before you read on.

- SEQUENCE OF OPERATIONS FOR INSTALLING A CYLINDER RIM NIGHT LATCH:

a. Mark out the position of the cylinder on the door (normally 105 cm from the bottom of the door).

b. Drill a hole with the diameter of the shell.

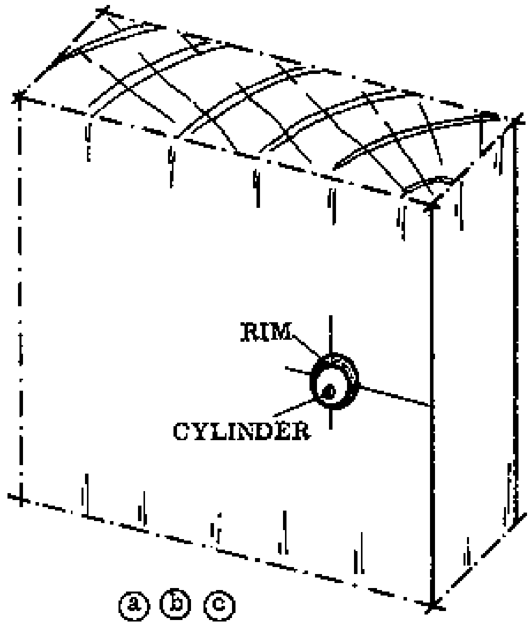

c. Insert the cylinder with the rim into the hole, and attach the back plate to the opposite side of the door with screws.

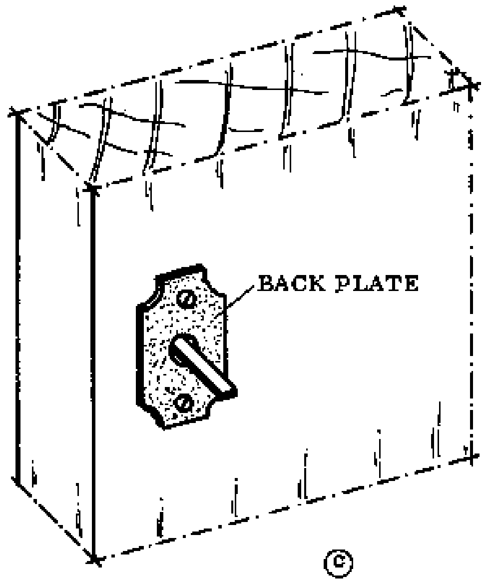

d. Mark the position of the latch and its face plate.

e. Chop the recess for the face plate.

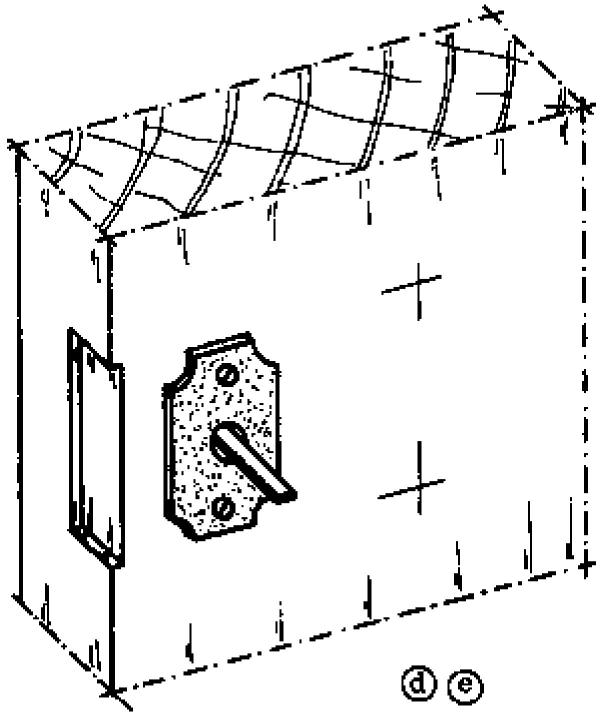

f. Attach the latch to the door with screws. Also use two screws on the face plate to attach the lock securely.

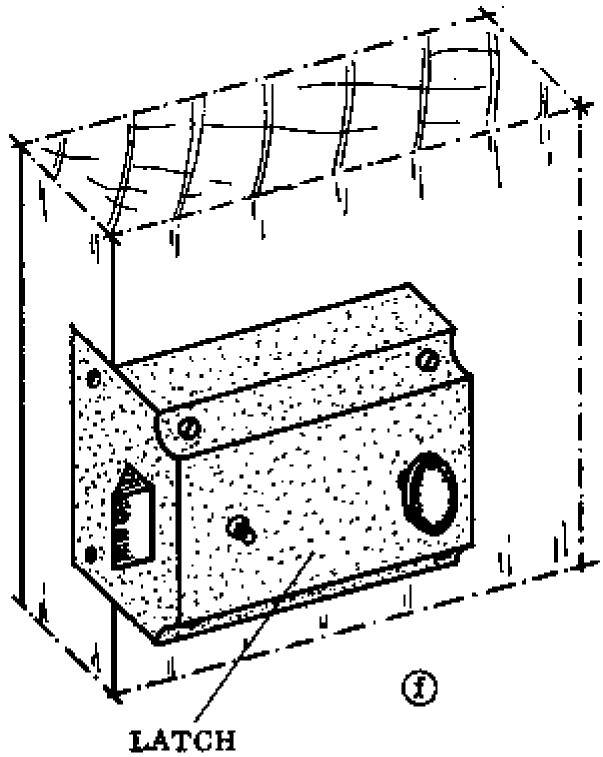

g. Turn the knob and check that the latch operates smoothly.

h. Mark the staple on the post and chop the recess for the staple face plate.

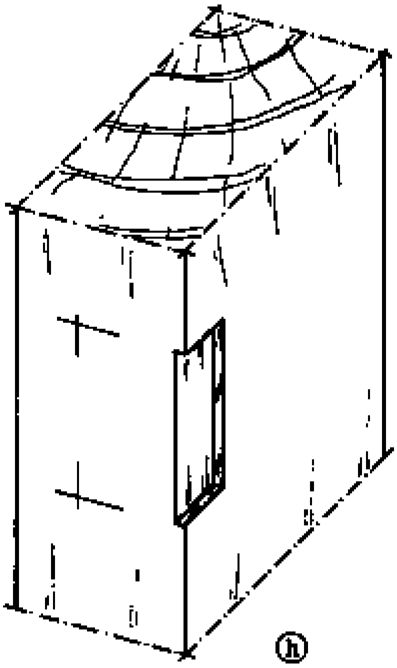

i. Attach the face plate to the post with screws.

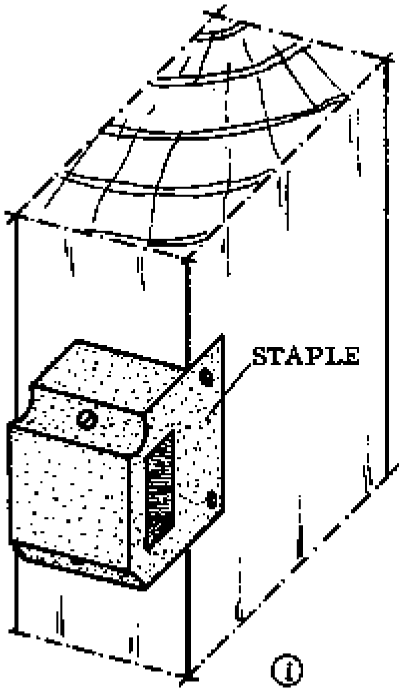

j. Check that the bolt of the latch fits in the staple.

CEILINGS

The best method of keeping the building cool is to separate the rooms from the roof by a ceiling. The ceiling also keeps out dust and dirt, gives the room a nicer appearance, and makes it quieter.

In Rural Building, we deal only with plywood ceilings. These consist of sheets of thin plywood nailed to ceiling joists (the wooden beams which carry the ceiling). The edges where the plywood sheets join are covered by the ceiling battens (Fig. 1).

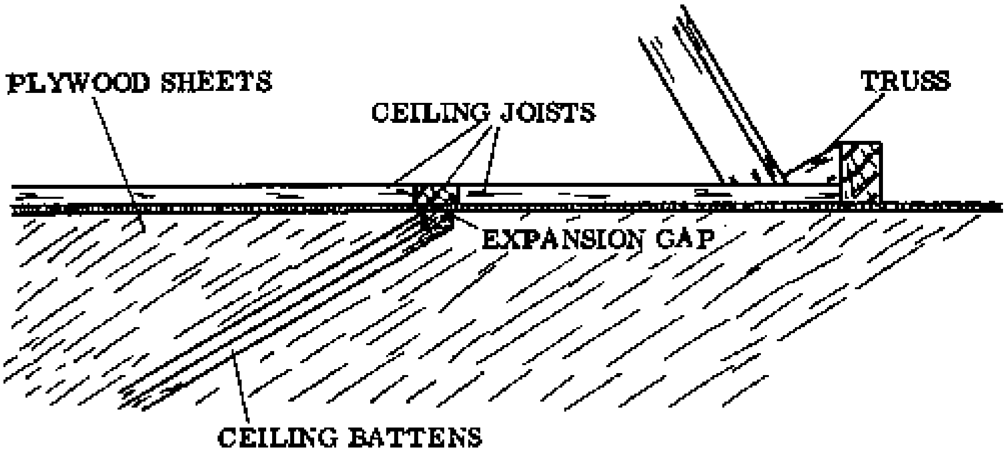

Fig. 1

- NOTE: Cross ventilation is extremely important. Every ceiling should be constructed so that there is cross ventilation between it and the roof. If this is not done, bats and other animals will make their homes above the ceiling; and also any dampness will soon cause the ceiling sheets to rot.

Cross ventilation keeps heat from building up between the roof and the ceiling, and thus the rooms are cooler (Fig. 2).

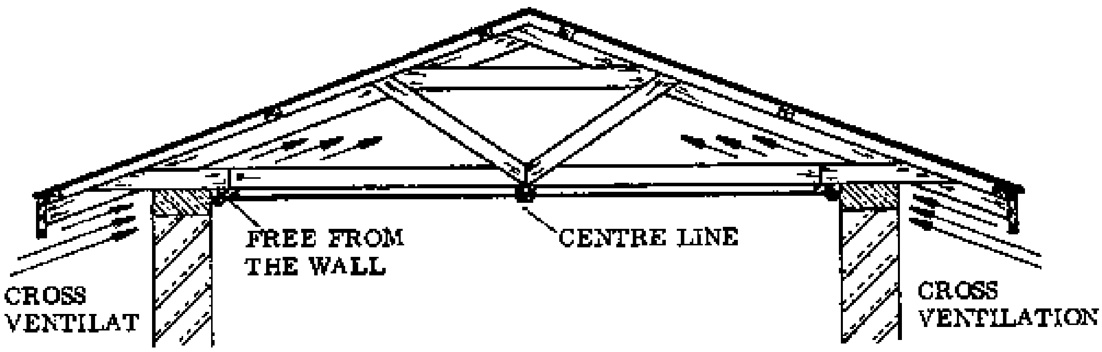

Fig. 2

Construction, parts and sizes of plywood ceilings

It is easiest to construct a ceiling under a roof with built-up trusses. If the soffits (undersides) of the trusses are level, the ceiling joists can be nailed between the tie beams. If the tie beams are not level, use battens nailed to the tie beams to build up until the surfaces are level (Fig. 3).

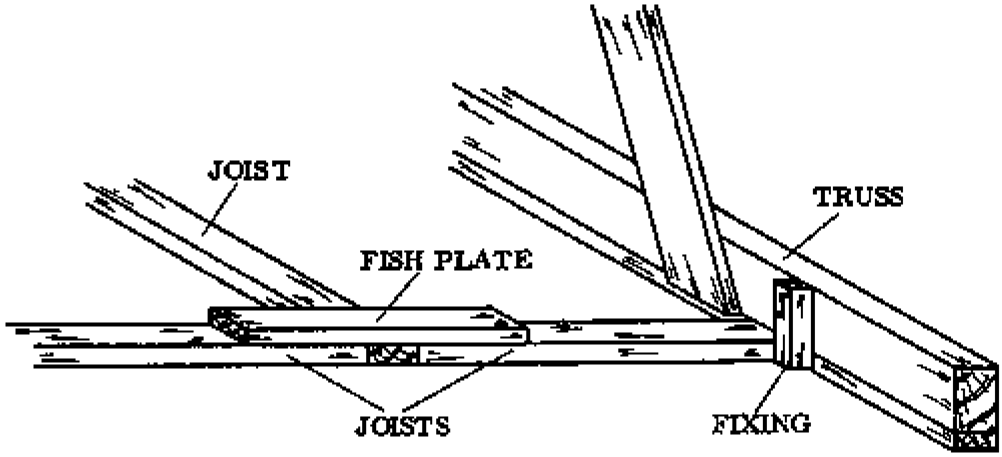

Fig. 3

If you want to fix a ceiling in a building with an ordinary pent roof (without trusses), a separate construction must be attached to the roof construction or to the wall, to provide support for the ceiling joists. Be sure to provide plenty of cross ventilation by some means (ventilation blocks could be used).

The distance between the ceiling joists should be no less than 122 cm. The joists can be left rough, because they are out of sight behind the plywood sheets.

When possible, design the rooms with the plywood sheet size in mind, just as the roof plan is made according to the size of the sheet material. Plan the size of the verandah and the positions of the inner walls so that the rooms are a convenient size and the plywood sheets fit without unnecessary waste.

NOTES:

- INSTALLING THE PLYWOOD CEILING SHEETS: Always start by fixing a line to show the exact centre of the room (Fig. 2, previous page). Start fitting sheets from this line. In case the sheets will not fit exactly in the room without being cut, start by putting one whole sheet in the centre of the ceiling, then divide the remaining space into equal areas.

There should be expansion gaps between the sheets to allow for changes in size with the changes of humidity. These gaps are covered by the ceiling battens. The battens are about 1 by 2,5 cm in size. Paint the ceiling and the battens before fixing the battens.

PAINTING

Paint preserves building materials from rot, rust, and general decay. Timber especially needs some finishing treatment, whether it is used inside or outside the building. Paint helps keep the wood from swelling or warping.

Protective finishes such as oil paints or varnish (Reference Book, pages 200 to 201) cover the wood with a protective “skin”. In order to be effective this skin must be undamaged, and so we have to repair and maintain these finishes periodically.

Which type of finish is used depends on whether the wood will be used outside or inside the building and on the particular function of the wood piece.

The selection of the colours for the inside and outside of the building is important because it affects the temperature of the building. Light colours keep the building cooler.

Preparation of surfaces for painting

Surfaces to be painted should be dry and clean; free from mud, dust, dirt, grease, rust, and old scaly paint.

All the boring, cutting, and shaping should be finished before the paint is applied.

Timbers should be well seasoned to prevent cracking. Paint with cracks in it is worse than no protection at all; water can enter the wood through the cracks, but it cannot evaporate off through the skin of paint so it causes the wood to rot.

If cracks appear in painted wood, sandpaper the wood before you apply new paint, to prevent the cracks from coming back. When you cut painted wood, don't forget to repaint the ends.

How to paint

Paint when the weather is good for drying, and when there is little or no wind or dust in the air. Paint should not be applied in wet weather or when the wood is damp. In new buildings first make sure that they are not damp. New masonry must be thoroughly dry before paint is applied to it. Drying, especially of floors, can take up to 6 months.

Mix the paint thoroughly before you apply it.

Painting is done with a brush. Dip the brush into the paint up to about 1/3rd of the length of its bristles, and remove the excess paint. Never dip the whole brush into the paint because the excess paint will drip out and be wasted.

Use long sweeping strokes and brush the paint well to form an even coating. Start at the top of a surface at one edge, and work across and down. Try to finish each day's work at a corner of the building or at a window. If you stop in the middle of a wall the mark will show where you resume painting the next day.

All new work, either of wood or masonry, requires three coats of paint. Surfaces which have been painted before need only two coats.

Before you apply a new coat, the previous coat has to be thoroughly dry. With most paints, the first two coats may be diluted with thinner to allow a better distribution and penetration. Only the final coat must be undiluted.

If wood is unprotected from the rain and sun, it will be necessary to repeat the application of finish from time to time. Take care that the end grain absorbs as much paint as possible.

Never allow a brush to rest upright on its bristles. If you stop work for a few minutes, remove the excess paint from the brush by wiping it on the edge of the tin, then lay it flat across the top of the tin or on a smooth clean surface.

If work is stopped for a longer time (overnight or for a few days), put the brush in a tin of kerosene. Here is an illustration of a good way to keep the paintbrushes; note that the bristles are covered with kerosene but they do not rest on the bottom of the tin. Simply drill a hole in the brush for the stick to pass through.

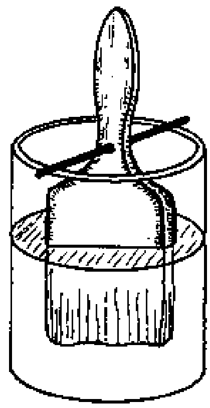

How to apply timber preservatives

There are two practical methods for applying timber preservatives:

- By painting (as described in the previous two pages)
- By soaking or dipping.

Different types of timber preservatives are required for different situations. The different kinds are described in the Reference Book, page 145.

- SOAKING OR DIPPING: Soaking or dipping is a much more efficient method than painting for applying any kind of timber preservative, because the chemical can penetrate deeper into the wood. This method can also be used for protective finishes such as oil paint.

Use a bucket or other suitable container to soak the wood for several hours or days. This method is only practical for smaller pieces like the ends of fence posts or frame pieces.

In cases where you are repeating the application of a preservative, use a preservative from the same group as the first application. Remember that the waterborne preservatives cannot penetrate over oil preservatives, but it is possible to apply an oil preservative over a waterborne one.

Only waterborne preservatives should be used if the wood will be painted later.

Take care that the end grain and splits absorb as much preservative as possible.

- NOTE: Be careful; most finishes are poisonous and can be fatal to human beings. Paints and paint thinners are often flammable.

NOTES:

APPENDIX

The following pages contain information and designs for constructions which do not necessarily fit under the topic of Rural Building, but which are nevertheless important for the Rural Builder to know about, at least in general. One of the purposes of this course is to prepare the Rural Builder to become a part of the development process in the rural areas, and this includes not only the construction of safe, healthy and comfortable buildings, but also the provision of safe water supplies, sanitation methods, and even the storage of the agricultural produce which is indispensable to rural life.

The following simple designs can be adapted and should be useful to almost any rural community.

NOTES:

WATER PURIFICATION

A water source is important in planning any building. The source can be a well, deep bore hole, spring, stream, or rain water collected from a roof and stored in a tank. The importance of water needs no explanation: it is worth spending both time and money to make sure that pure water is available at all times.

Many diseases come from drinking impure water. The danger of disease can be reduced by taking such precautions as boiling and/or filtering drinking water. Water obtained from a clean source such as a properly dug well or a borehole should carry no disease in it.

There is much that the Rural Builder can do to help the people in his community to have clean water to drink.

Small water filter

One way to improve the quality of water is to use a water filter. A simple design for a filter which can be made by anyone is shown below. It is used for small amounts of water. The filter consists of a locally made pot which hangs from wires or ropes.

The pot is partly filled with layers of fine sand, gravel and stones. The water sinks down through this and drains off through holes in the bottom of the pot. The diameter of the holes should be small enough so that the stones can't pass through.

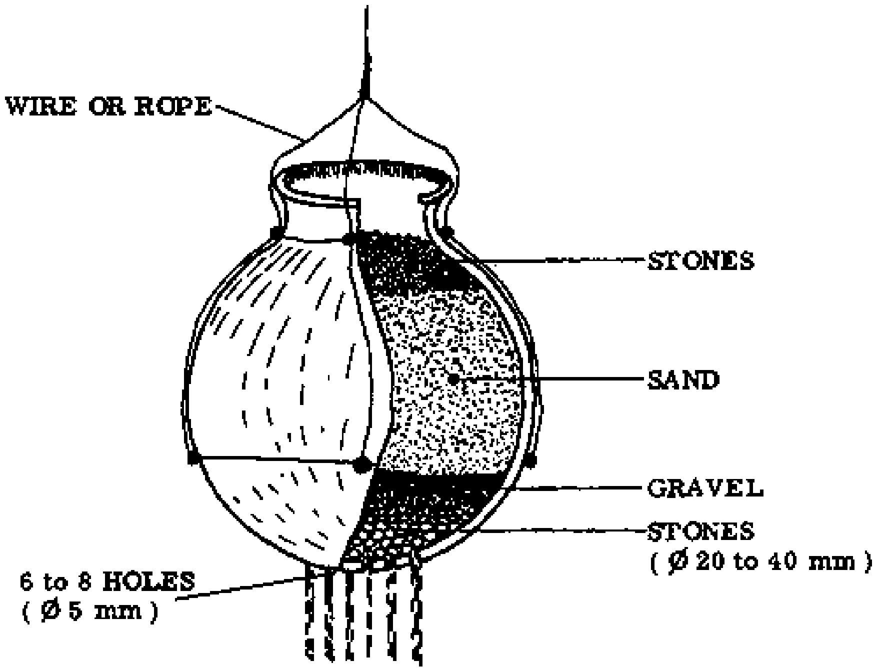

Large water filter

A built-up water filter (Fig. 1) can be used to purify larger amounts of water. Its size depends on the amount of purified water that is needed.

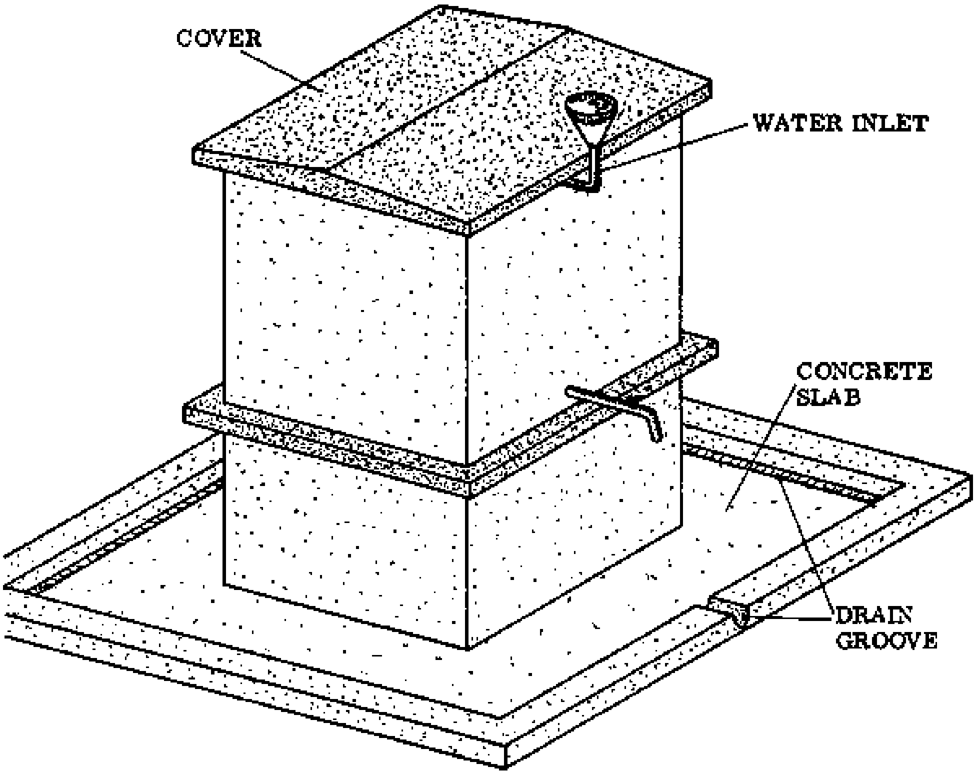

Fig. 1

The cover can be removed to allow the user to clean the filter materials and the entire inside of the tank. If the cover is very heavy it can be made in two halves.

The water inlet also acts as a ventilation opening. The top of the funnel should be covered with copper or aluminium mosquito wire to keep insects out of the tank. The distribution pipe inside (Fig. 2) has many fine holes to make sure that the water is spread evenly over the sand. If necessary install more distribution pipes so that the whole top surface of the sand can be soaked with water; thus using all of the filter materials inside the tank rather than overloading a small area.

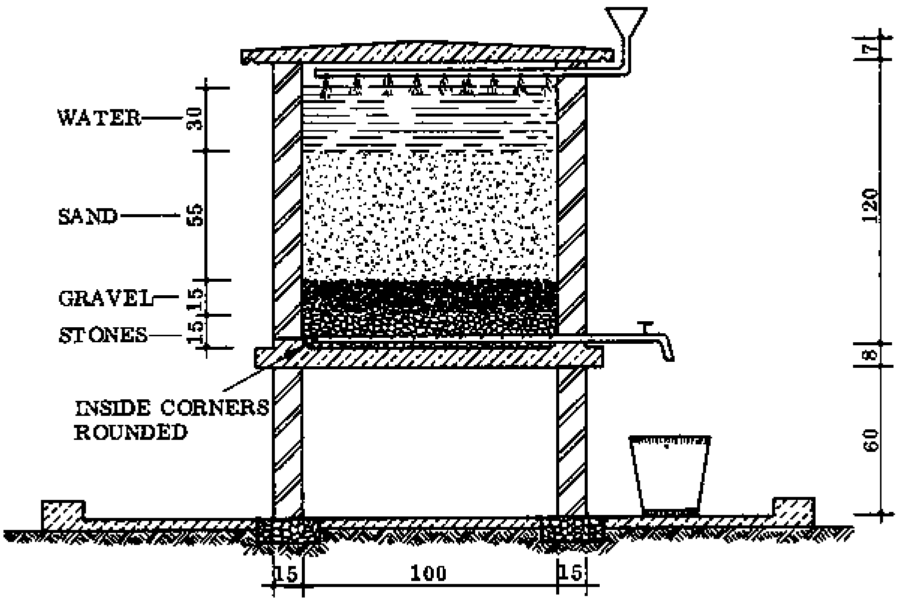

Fig. 2

The space of 30 cm at the top for water storage may be increased if necessary. The depths of the different layers of filter materials should be no less than indicated. If the layers are made deeper still the water will be filtered more thoroughly, but generally the indicated depths are sufficient (also see Drawing Book, page 120).

At the bottom of the tank a piece of pipe with holes in it allows the filtered water to drain off. There should be plenty of holes, and the diameter of the holes should be small enough to prevent the fine gravel from entering the drain pipe. At the end of the pipe a valve can be used to stop or start the flow of water. It drains into a container which is placed under the pipe.

The floor of the tank should be constructed with a rim all around (Fig. 2), which carries the walls and projects at the base of the walls, so that there is no crack between the walls and the floor. The whole inside should be plastered smooth to make it easy to clean.

The filter should be built off the ground so that the water can drain easily into buckets. It is advisable to concrete the area surrounding the filter and to provide a drain for spilled water (Fig. 1).

When the filter needs cleaning the water flow will become very slow. To clean the filter it is only necessary to take off the top 2 cm of sand and replace it with clean sand. Depending on how clean the water is at the start, the filter may need cleaning only after several weeks or even months.

NOTES:

HAND-DUG WELLS

The hand-dug well is the most common kind of well. Unfortunately, most wells are dug according to very basic “hole-in-the-ground” methods, and they can become health hazards as they are easily infected by parasites and bacterial diseases. With modern methods and materials, hand-dug wells can safely be made up to 60 m deep and will give a permanent source of good water.

Untrained workers, if they are properly supervised, can safely dig a deep well with simple light equipment. The basic method is outlined here. This information is intended to help you to dig more safely, and also to make a well that will not become contaminated by surface water. However, there are other problems concerning well digging that are not covered here, and you are advised to seek the help of an experienced well digger when you make a well by this method.

Lining wells

Masonry or brickwork are widely used in many countries to line the walls of wells. These can be very satisfactory in the right conditions. In bad ground however, unequal pressures can make the lining bulge or collapse. Building with these materials is slow, and a thicker wall is required than with concrete linings. There is also the danger of the blocks moving during the construction in loose sandy soil or shale, before the mortar has set firmly between them.

This danger is prevented with concrete linings because the form is left in place to support the lining until the concrete has set hard.

Lining (Fig. 1) prevents the hole from collapsing; keeps out contaminated surface water; and supports the pump platform if there is a pump.

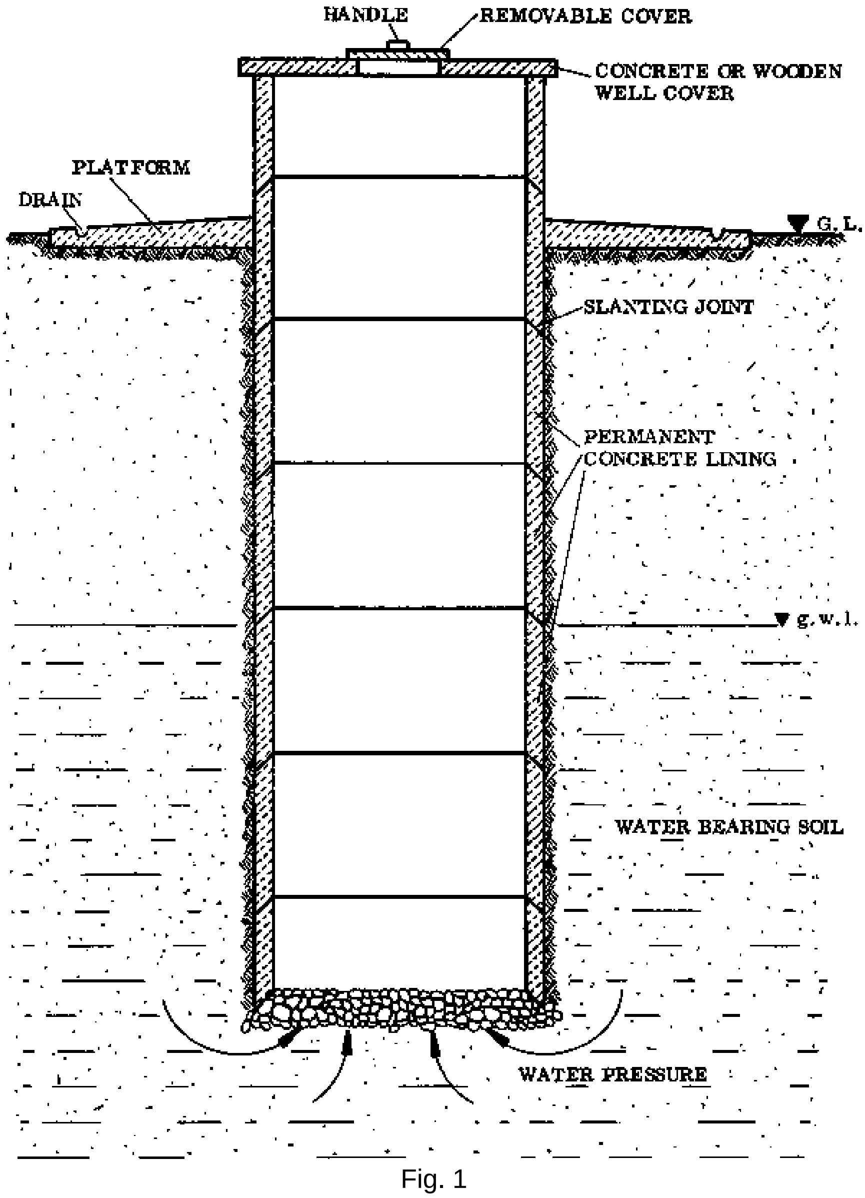

Fig. 1

It is usually best to build the lining as the well is dug, since this avoids the need for temporary supports and also reduces the danger of cave-ins during digging.

There are two methods for doing the lining:

- As the hole is dug, the sections of lining are built into their permanent positions. This is the method explained on the following pages.

- Precast sections of lining are added at the top and the whole lining moves down as the hole is dug and earth is removed from under it.

NOTES:

Tools and materials needed

- Shovels
- Pick-axes
- Buckets
- Ropes and pulley
- Steel forms and bolts
- Wooden or steel tripod
- Cement
- Reinforcement bars
- Sand
- Gravel
- Oil

Construction

Experience has shown that when one man is digging, he will be able to dig most efficiently if the well is about 100 cm in diameter. However if two men are digging together, a 150 cm diameter is best, and the two can dig more than twice as fast as one man. Thus two men in the larger hole is usually best, also for safety reasons.

- NOTE: Do not construct a well near a latrine, septic tank, or other source of contamination. The well should be as far away from these as possible; at least 30 m, and it should never be downhill from a source of contamination.

- SEQUENCE OF OPERATIONS:

a. Erect a wooden or steel tripod to support a pulley and bucket for bringing out soil from the hole.

b. Dig down until you reach ground water level (g.w.l.).

c. Make the first concrete ring section just above the g.w.l. (Fig. 1, A)

d. While the first section cures, proceed with digging the hole for the second section. The rings should be made with slanting edges as shown in Fig. 1, so that the joints between the rings slant downwards.

e. Continue constructing ring sections until the well is deep enough.

f. The other rings above ring A can be constructed during the digging.

g. When the concrete lining is completed, the walls of the whole well should be waterproof, so that surface water can't enter the well. A concrete plat form with a groove for drainage should be constructed, and a wall around the edge to keep people and animals from falling in. Either blocks or rein forced concrete can be used for the wall (Fig. 1, previous page).

h. The well is closed off with a wooden or concrete cover, with a small opening for buckets to go through (Fig. 1, previous page).

i. If possible, disinfect the entire well by adding a chlorine solution to it. Use about 1 heaping tablespoon of bleaching powder to 2 buckets of water and mix. Make up three buckets of the solution to wash the walls of the well thoroughly, and pour the remainder into the well. Make up another three buckets and put that into the well too. Leave it overnight before using the water.

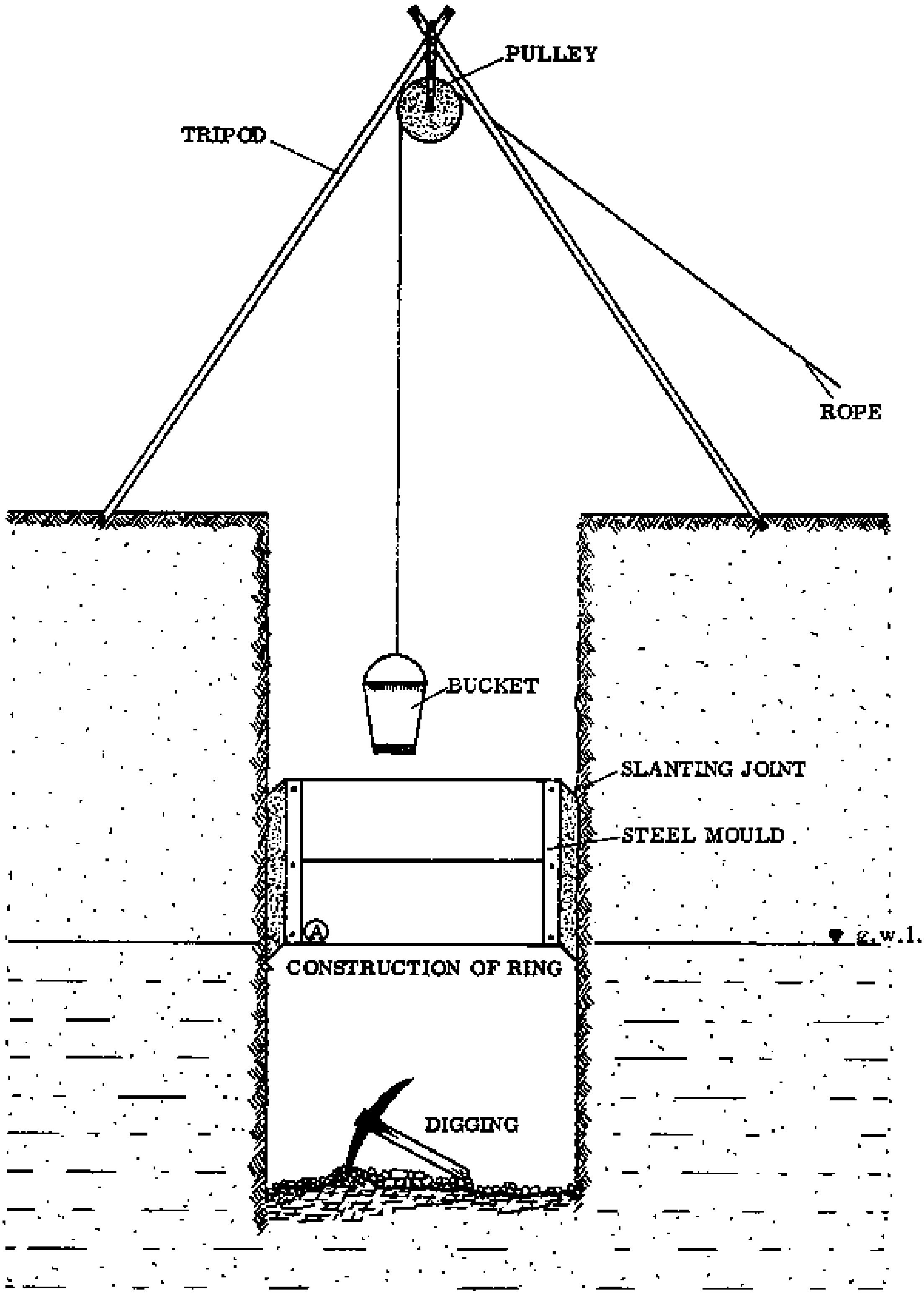

Fig. 1

- NOTE: Since there is a lot of water in the soil, don't use too much water in mixing the concrete for the lining. Be careful that there are no voids (empty pockets) in the concrete lining. These give surface water and soil a path to enter the well.

- MOULDS: A steel mould (Fig. 1) or a wooden mould (Fig. 2) is used to support the sections of concrete lining during construction and curing. After the ring has hardened sufficiently, the wooden lock pieces are removed and the mould is taken out and used for the next ring (Fig. 3).

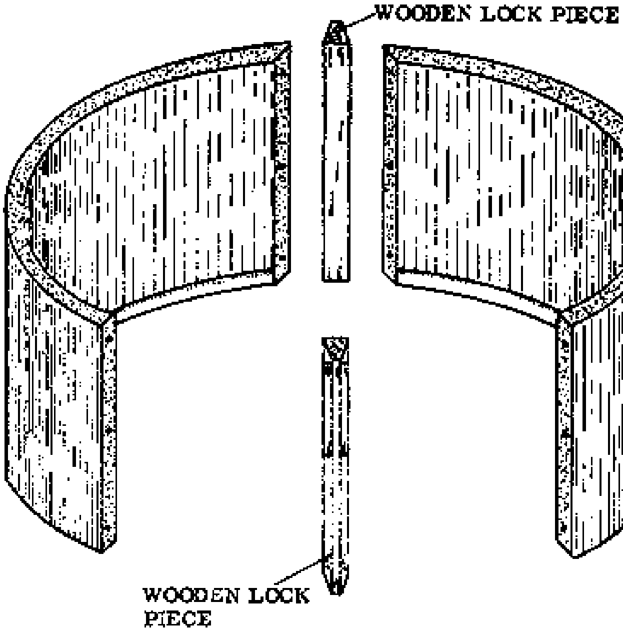

Fig. 1 STEEL MOULD

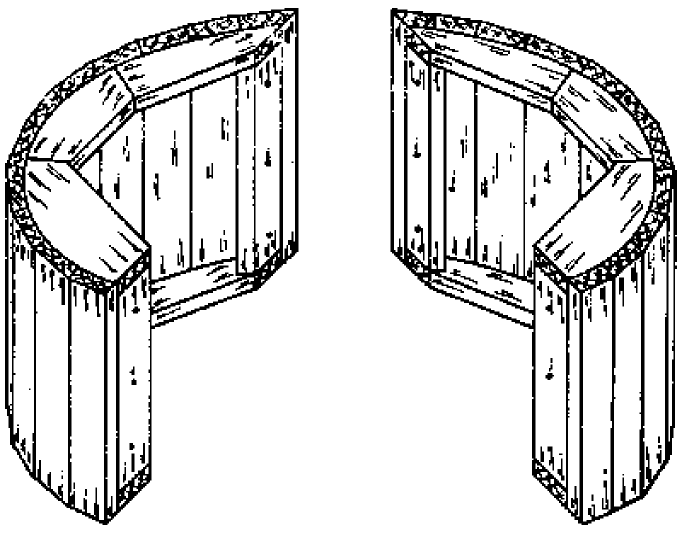

Fig. 2 WOODEN MOULD

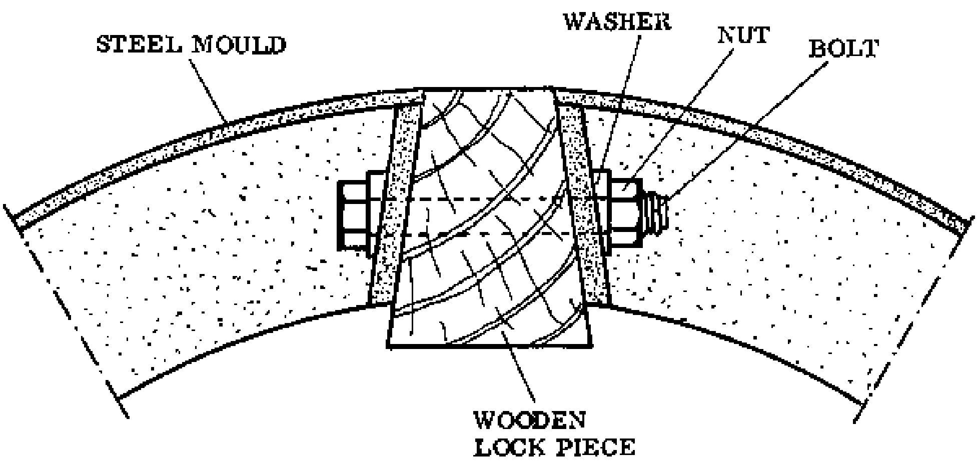

Fig. 3

When you assemble the mould, be sure that the wooden mould or wooden lock pieces are first soaked in water so that the wood does not expand when it contacts the wet concrete. If the pieces expand they will crack the concrete ring, and it will be very difficult to get the mould out again.

GRAIN STORAGE SILO

Often traditional storage methods result in the loss of valuable grain, because insects or mice etc. get into the grain. To help farmers with this problem the Garu Agricultural Station in the Upper Region has developed a new type of grain silo. This silo requires a few bags of cement plus stones or gravel to construct. It can hold between 9 and 16 bags of grain.

Compared to some types of traditional storage, the silo gives better protection to the grain against mice and insects. When the silo is closed so that no air gets in, CO_2 gas develops from the grain and stops the insects from developing.

Construction of a silo

Sun-dried laterite blocks are used for the walls of the silo. The blocks are made in the same way as any other mudblock.

Cast the topslab before starting to construct the rest of the silo, so that it will be cured and ready to use when you need it. Construct a frame for casting the slab, with an inner frame for the manhole (Fig. 1, next page). Reinforce the slab with some rods. For measurements, refer to the Drawing Book, page 118. Note that the top of the slab slopes to the outside. Also note that the edge of the slab is fitted with a groove underneath so that rainwater drips down instead of running back under the slab (Fig. 1, left).

Also make a frame for the manhole cover and cast this piece. Use a piece of iron rod set in the concrete for a handle (Fig. 1).

Place wet paper under the frames before you begin to pour the concrete. The concrete has to remain in the frame for three days. Water it twice daily so that it hardens well without cracking. After the concrete hardens (cures) remove the frames carefully so that they can be used again.

- FOUNDATION AND FOOTING: Dig out the top soil and make a concrete slab if needed (if the soil is soft). The slab will be 125 cm in diameter and about 6 cm thick. The footing is made of large stones set on the slab or on the ground. The stones should be placed in such a way that air can circulate freely between them and they should be built to a height of 30 cm above ground level. On top of and in between the large stones, small stones are used to fill in the gaps to form a surface for the floor to rest upon (Fig. 1).

- FLOOR: The floor is poured directly onto the footing. This floor is a working surface only and the top should be left rough so as to give a good grip to the slanting floor (Fig. 1, previous page).

- FIRST COURSE: Place the chute in position. The chute is a kind of open-ended box made from wood, with a sliding closure that can be locked (Fig. 1, previous page). Now proceed to lay the first blocks. The section after this one describes the procedure for laying blocks in a round structure.

- SLANTING FLOOR: Build up four courses, then pack the slanting floor on top of the rough floor. The mixture for this slanting floor should not be too rich, so it doesn't crack. After the mixture is poured into the silo, pack it down well and plaster the top of the slanting floor smoothly. To do this apply some cement powder and add some water, then smooth with a steel float.

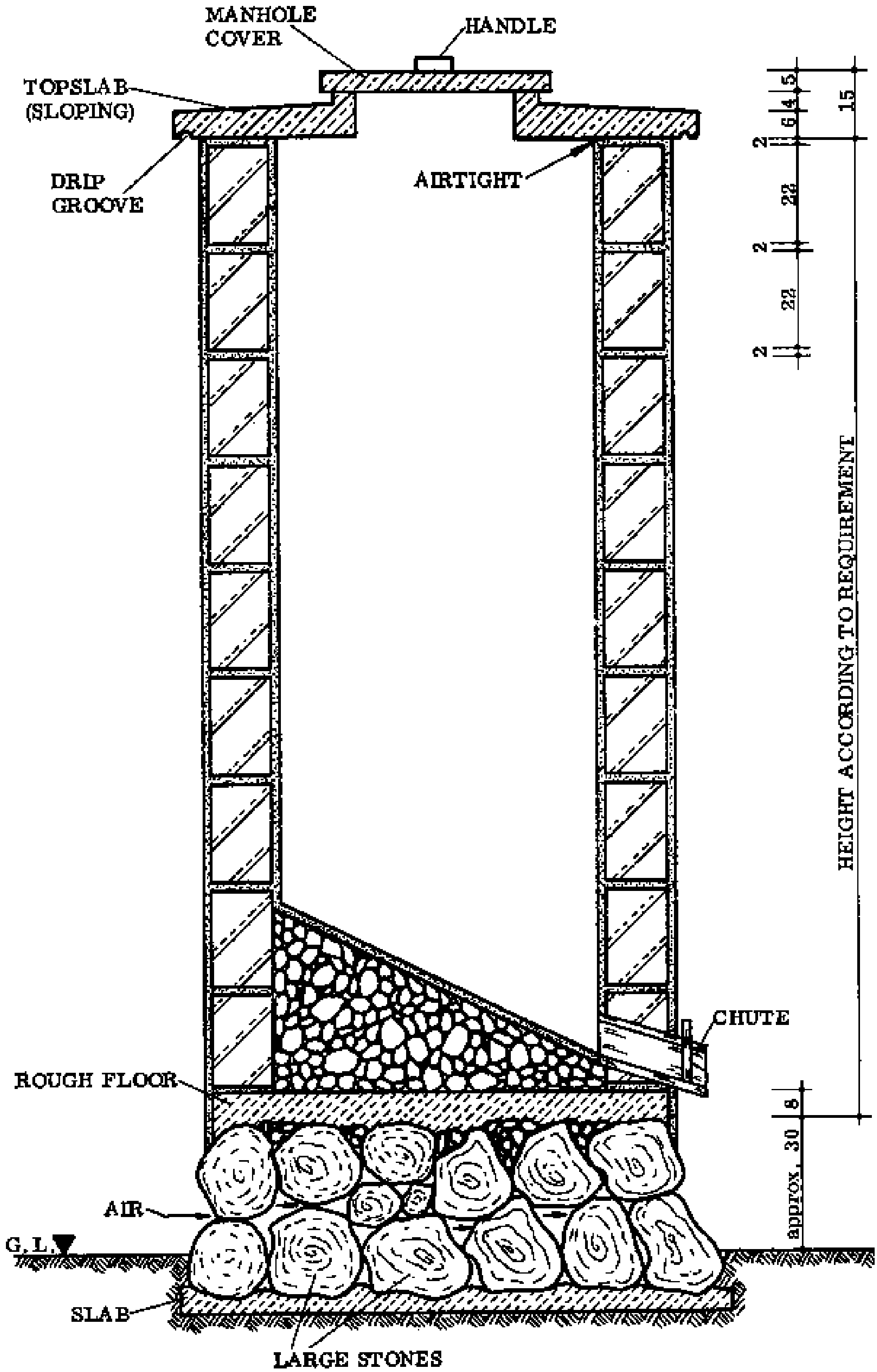
MANHOLE
COVER
HANDLE
TOPSLAB
(SLOPING)
DRIP
GROOVE
AIRTIGHT
CHUTE
ROUGH FLOOR
AIR
G.L.
SLAB
LARGE STONES
5
4
6
15
2
22
2
22
2
HEIGHT ACCORDING TO REQUIREMENT
8
approx. 30

Fig. 1

- WALLING: Build the walls up straight, using a plumb bob on all sides and for each course. The height of the silo depends on the required storage area. When the desired height is reached, plaster the inside of the silo. The inside plaster should be very smooth and without holes or cracks, so that the silo is airtight.

- TOPSLAB: Provide a mortar bed for the topslab on top of the wall. Then place the slab into position. The slab will be heavy, so several people will be needed for this operation. One man should be inside the silo to direct the operation.

- PLASTERING OUTSIDE: When the slab is set in position you can do the plastering on the outside of the silo. This has to make the silo waterproof, so the finish should be smooth and without cracks.

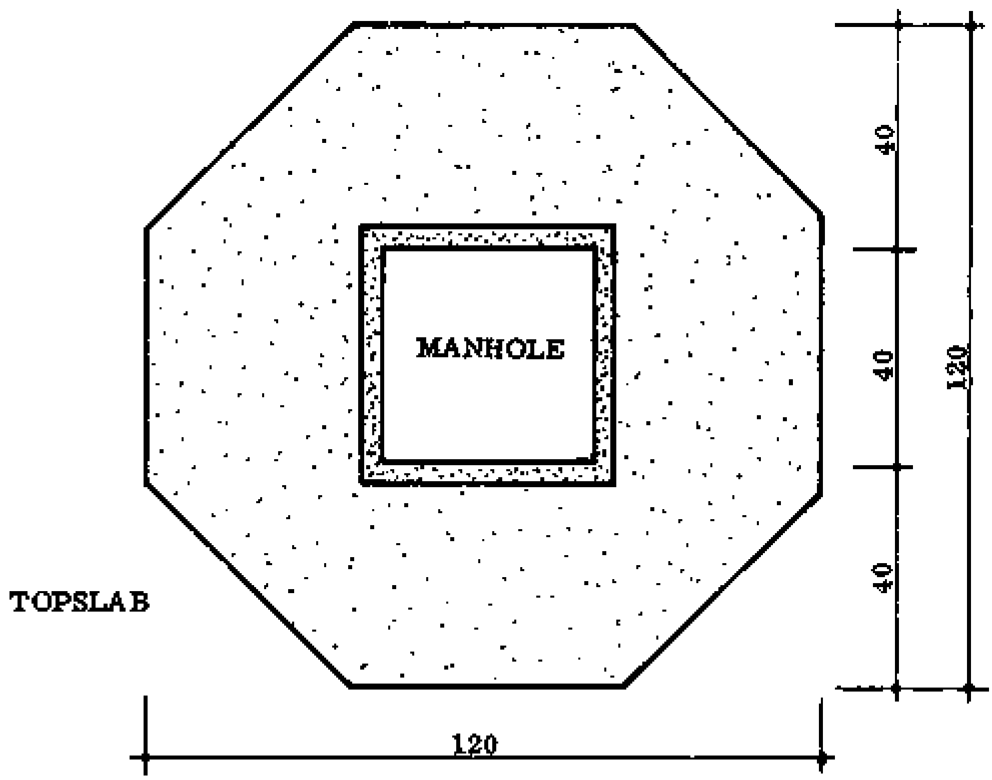

Using the silo

Dry the grain very well before you put it in the silo. Moist grain will rot, the silo will crack, and all the food will be lost. Distribute the grain well and fill the silo to the top.

Put the cover on the manhole and seal the edges with mud or cow dung. Also seal the chute so that nothing can enter the silo.

Keep the footings and the area around the silo clean.

Check the silo often for cracks, especially when it is full. Replaster any cracks immediately. The wooden chute should always close tightly and the plaster around it should not be cracked.

Paint the silo white or whitewash it. This makes it cooler inside and gives it a nice appearance.

When the silo is emptied, take care to empty it completely. Left-over grain attracts insects and rodents.

Before the silo is filled up again next year, it should be clean and insect free. Light a small bundle of grass on fire inside the silo. The smoke and heat will kill any insects or insect eggs. Sweep out the ashes and dust, and clean the entire silo thoroughly.

Circular masonry work

A section on circular work is included here because in Rural Building circular work applies mostly to structures like silos or protective walls around wells.

Here we describe a sequence which might be used to construct a silo. It may be adapted for other structures as well.

Regular blocks are used. Wedge-shaped blocks can be specially made for the job, but the shape of the wedge has to be calculated exactly according to the size of the circle.

NOTES:

Sequence of operations

a. Determine the centre of the circle. Drive an iron rod into the ground at this point (Figs. 1 & 2, a). The rod should be a little higher than the top of the first course of the future rising wall.

b. The inner and outer curves of the foundation are marked on the ground by fixing a mason line to the rod and describing circles with this at the desired radii (Fig. 1, b).

c. The foundation is completed, then the inner curve of the footings is marked on the top of the foundation using the same method (Fig. 1, c).

d. The footing blocks are laid so that the inside corners of each block touch the marked circle (d). The next course is marked on top of the first course and laid in the same manner.

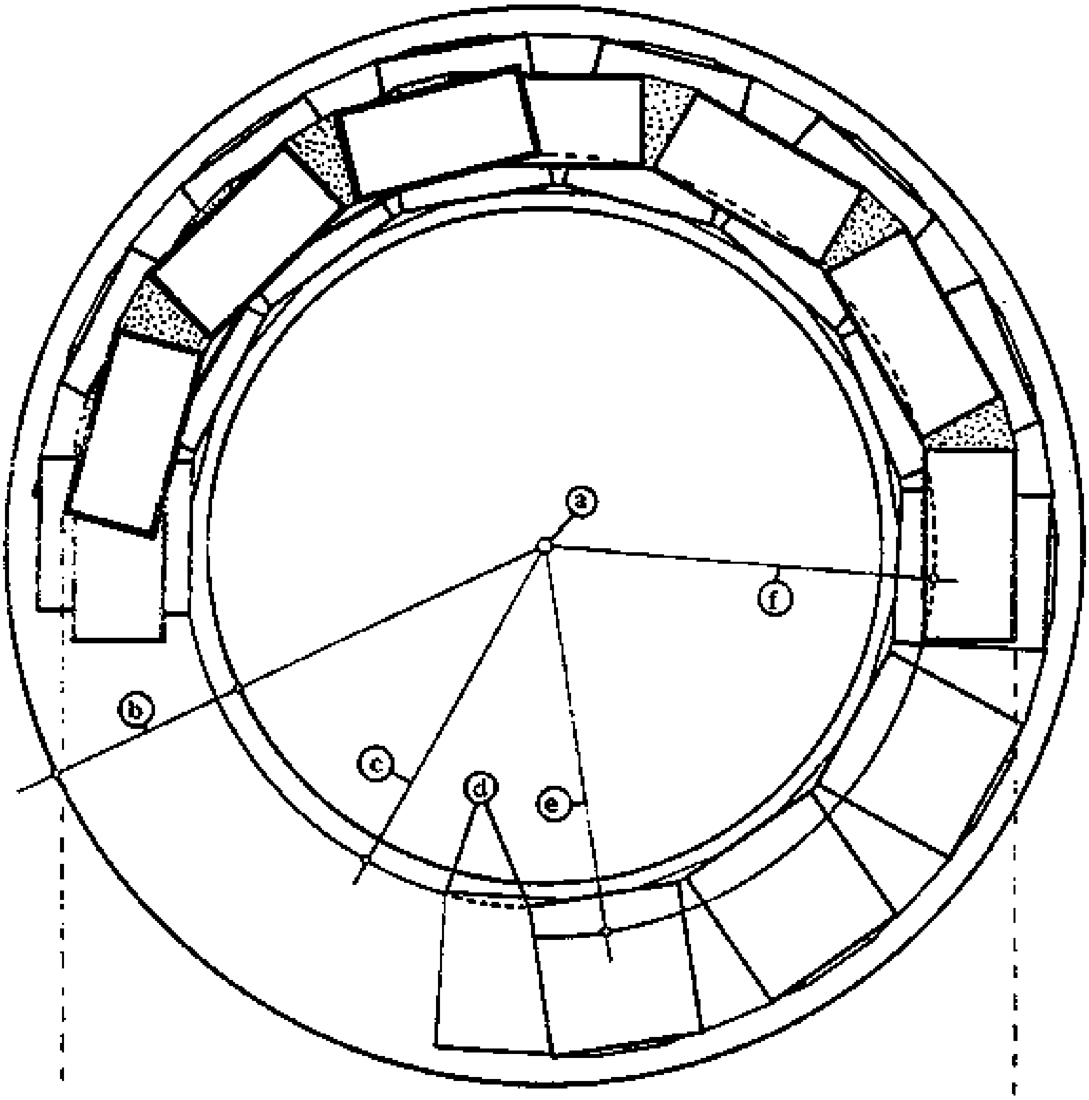

Fig. 1

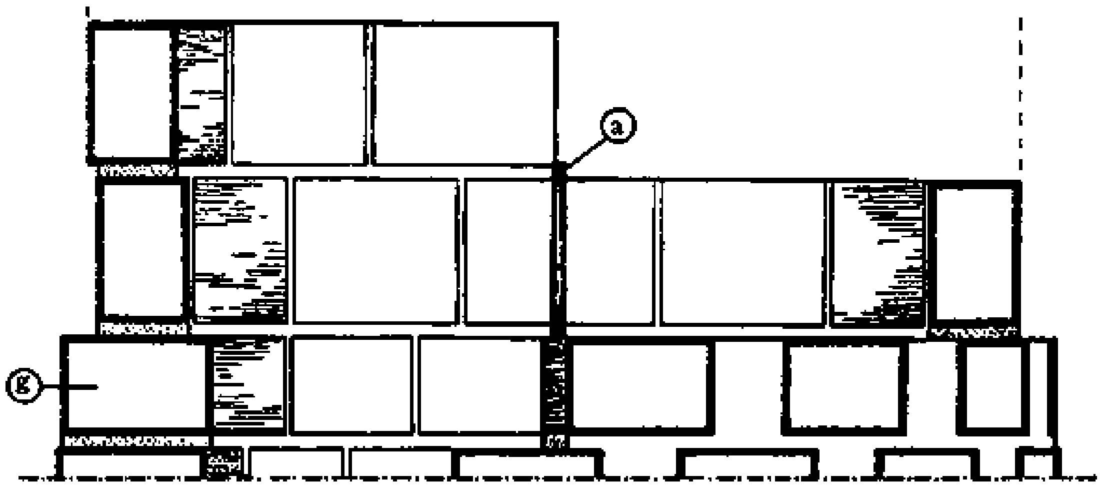

Fig. 2

NOTE: In this construction the footings are made with blocks, unlike the silo described in the preceeding pages, where the footings where made of large stones. If a silo is to be built on top of the footings, the cross joints between the blocks are not filled in; this permits cross ventilation. The space up to the top of the footings is filled in with large stones and the floor is made on top of these, as in the silo described before. Remember to set the chute in place on top of the footings before you continue with the rising wall construction. Only two footing courses are necessary to reach the required height of 30 cm for the silo floor.

e. When the footings are completed, the rising wall is laid out on top of the footings with the line and peg as before (Fig. 1, e). The blocks are positioned with the corners touching the circle as before.

f. The second course of the rising wall is laid out on top of the first course (Fig. 1, f), and the blocks are laid as before.

g. The following courses are laid with the aid of the plumb bob. All cross joints are 1 cm thick along the inner curve. Each course of the rising wall is plumbed according to the course two courses below it (3rd to 1st, 4th to 2nd, 5th to 3rd, etc.).

Fig. 2 shows a side view of Fig. 1, but only the last footing course is shown (g).

NOTES:

PIT LATRINE

Latrines, and especially pit latrines, are the most common and simple sanitation systems. A pit latrine is practical for rural areas because it is the cheapest possible system and the easiest to build.

One major problem with pit latrines is the limited capacity: only a certain number of people can use the latrine, or else it becomes full too quickly and another pit must be dug. Another problem is that the latrine, if it is improperly made or made in the wrong place, can contaminate nearby wells or surface water. Also, if the ground water level is near the surface it may not be possible to dig a deep pit.

Capacity

The volume of the pit may be planned by using the rough figure of at least 0,06 cubic meters per person per year. Thus a pit which is 1 m square and 3 m deep may serve a family of five for about 6 years, before it becomes two-thirds full and a new pit has to be dug.

Pit latrines of the type shown on the opposite page (Figs. 1 & 2) should not be used by large numbers of people unless there is space available to dig several pits. If many people use the same pit it will quickly become full, and the ground around it can become contaminated.

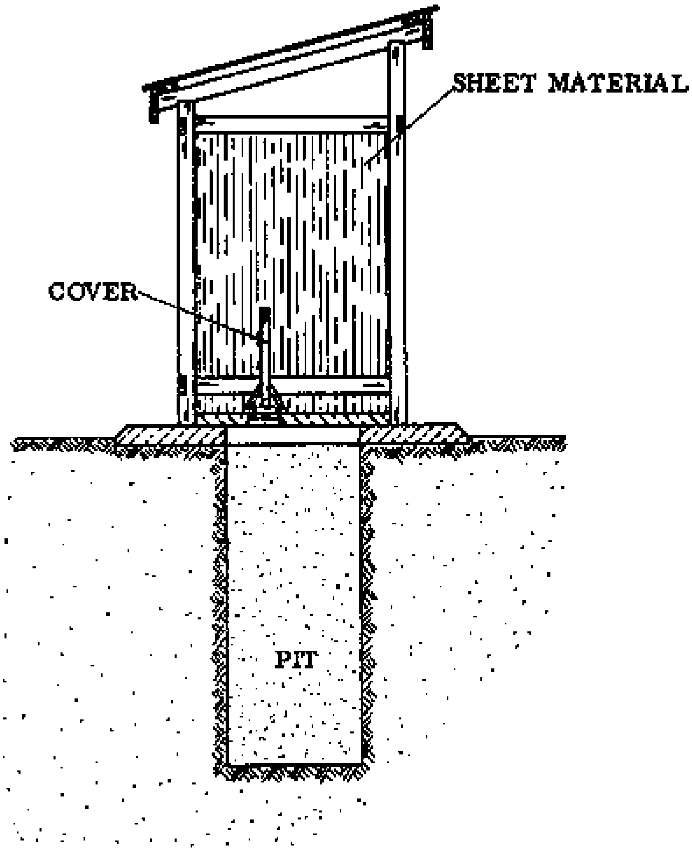

Fig. 1 ORDINARY PIT LATRINE

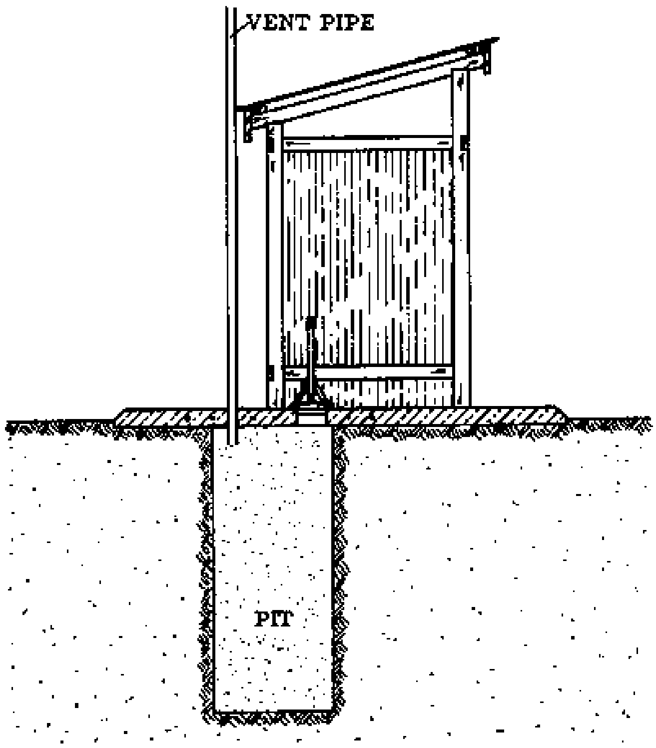

Fig. 2 VENTILATED PIT LATRINE - ADVANTAGE: LESS SMELL DUE TO VENT PIPE

It is a good idea to dig two pits at once, so that when one is 2/3rds full it can be closed, filled to the top with soil, and left there for 6 months to a year; by which time the harmful, disease-causing organisms in it will have been destroyed. The sludge can be taken out and mixed with compost, making a very valuable (and non-imported) fertilizer for gardens or farms.

- NOTE: Human wastes which have not been composted for at least 6 months should never be used as a fertilizer for food crops, because disease can be spread that way.

Location

The pit latrine should be located at least 6 m away from any house, and at least 30 m away from any water source: well, bore hole or stream. The latrine should never be located uphill from a water source - this is extremely important.

NOTES:

Design and construction of the squatting slab

The squatting slab should be designed with easy cleaning in mind. It is made out of concrete reinforced by iron rods as shown in Fig. 1. The rods should be about 8 mm in diameter.

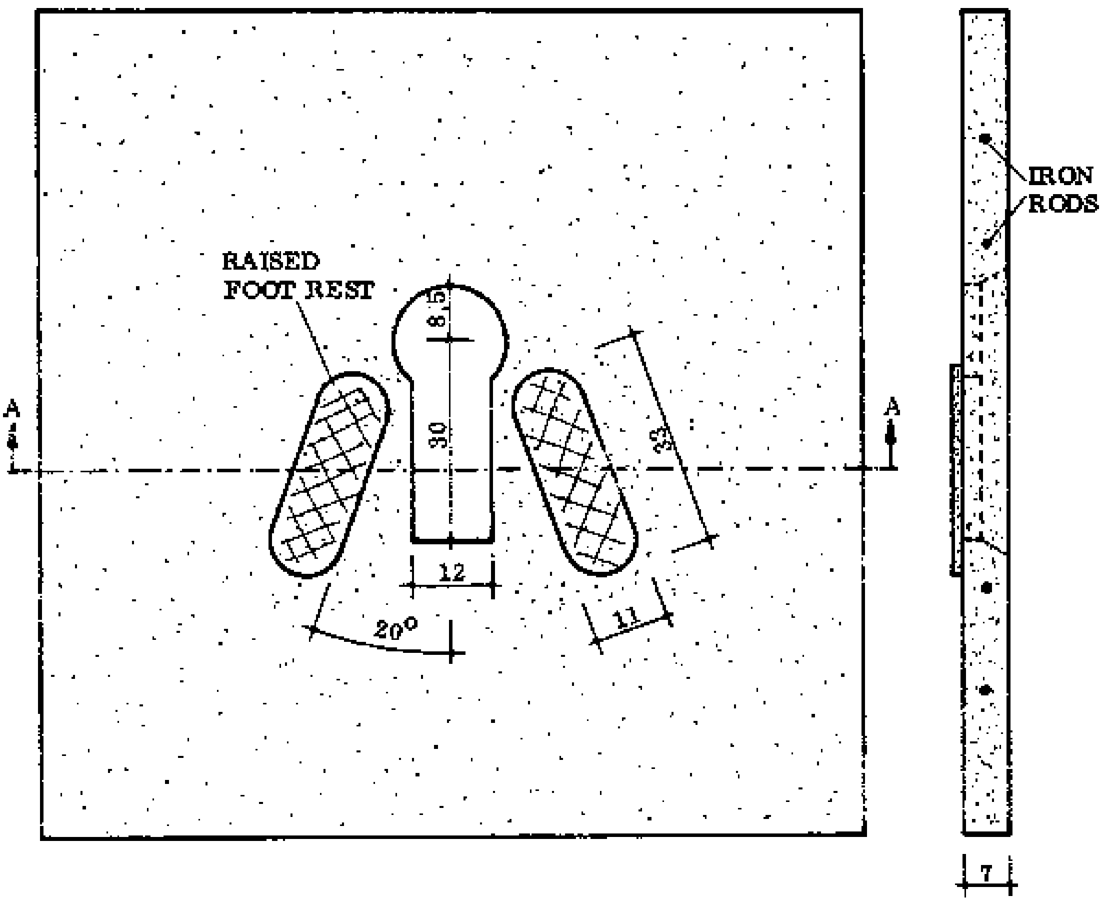

Fig. 1

The slab may be square, round, or rectangular in shape. A common size is 100 by 100 cm. The whole slab will weigh about 140 kg. The advantage of a round slab is that it can easily be rolled around the site and into place. The slab should be about 7 cm thick. The raised foot rests make the slab easier to clean. The shape of the hole and foot rests may vary; a typical arrangement is shown here. The hole should be at least 36 cm long to prevent soiling of the slab, and less than 18 cm wide so that small children can't fall through.

The distance from the back of the hole to the back wall of the latrine should be at least 15 cm, so that it is not necessary to lean against the wall when squatting.

Make a cover for the latrine hole out of wood, with a long handle (Fig. 2).

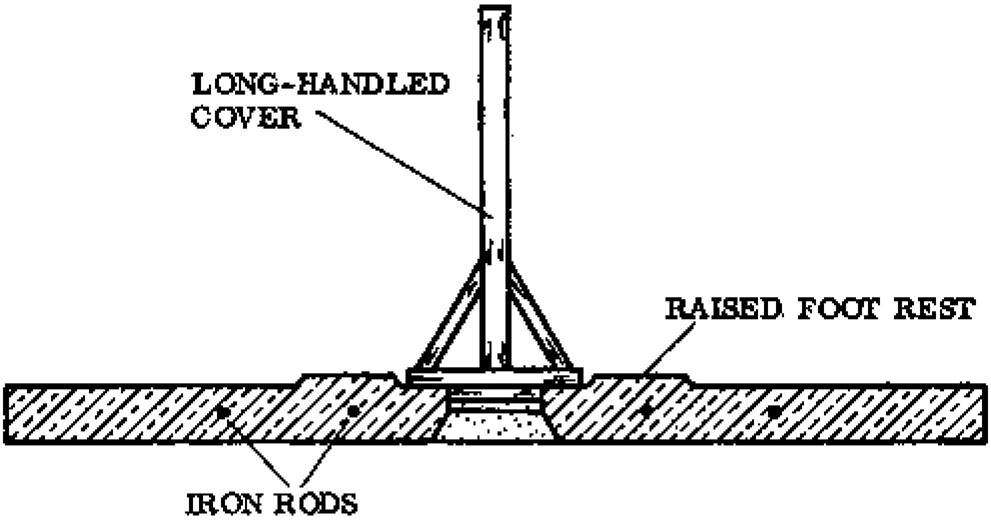

Fig. 2 CROSS SECTION A-A

NOTES:

Construction

The first step is to precast the squatting slab, as described on the previous page.

Make the hole for the latrine large enough so that it won't become full too quickly. The soil should be firm enough so that the weight of the latrine structure won't cause the hole to collapse. If the soil is firm enough, the foundation slab can be poured around the edge of the hole (first remove the top soil) (Fig. 1). If the soil is a bit soft, reinforce the foundation slab.

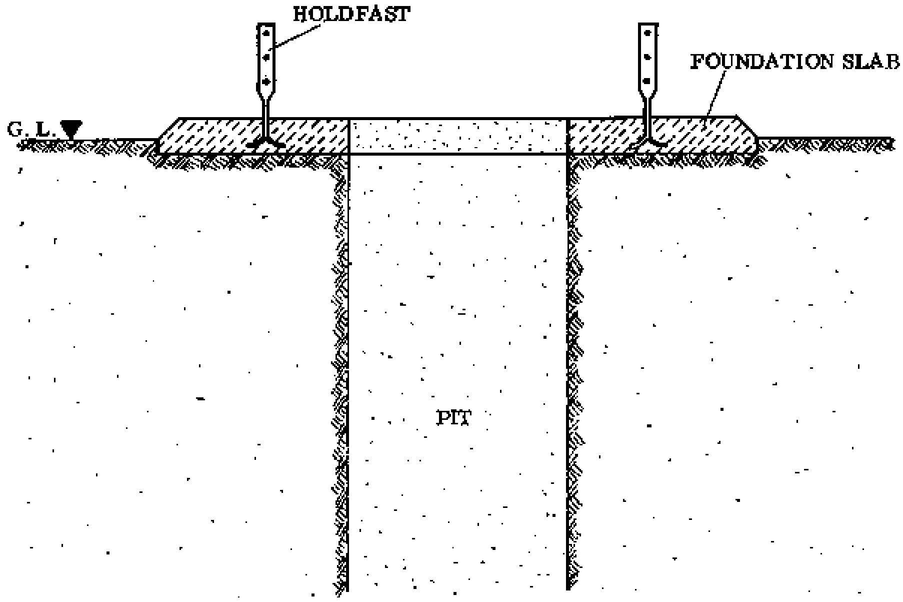

Fig. 1

If the soil is very soft, it will not be able to bear the weight of the construction. Then it will be necessary to construct a lining for the hole to be sure that it will not collapse. The lining can be made with blocks; or in a round hole with concrete rings, as described under the section on wells, page 279. The foundation slab then rests on top of the lining and cannot sink down into the soft soil (Fig. 2).

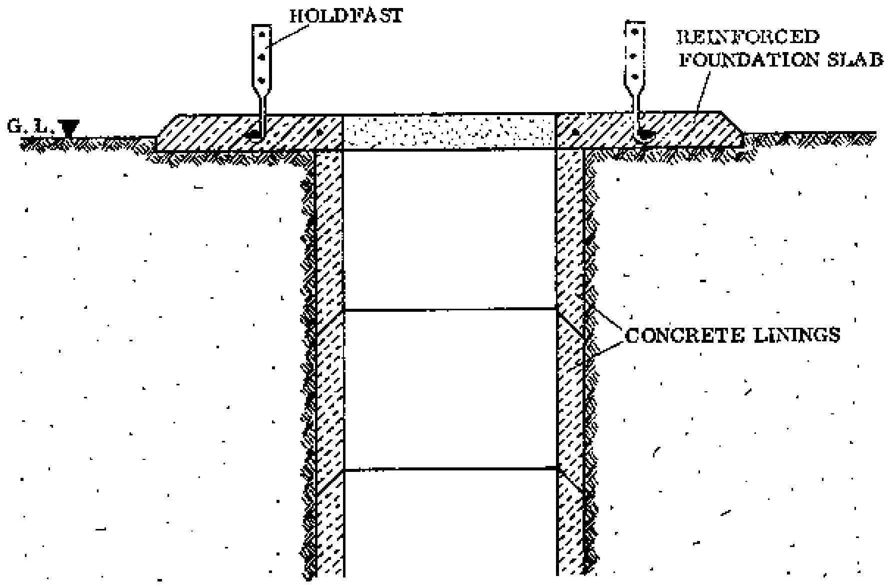

Fig. 2

When you construct the foundation slab, fix some steel rods or holdfasts in the concrete, as shown in Figs. 1 & 2. These can be used later to anchor the wooden structure of the toilet.

When the foundation slab is cured, place the precast squatting slab on top of the foundation and secure it in place with a weak mortar (Fig. 3).

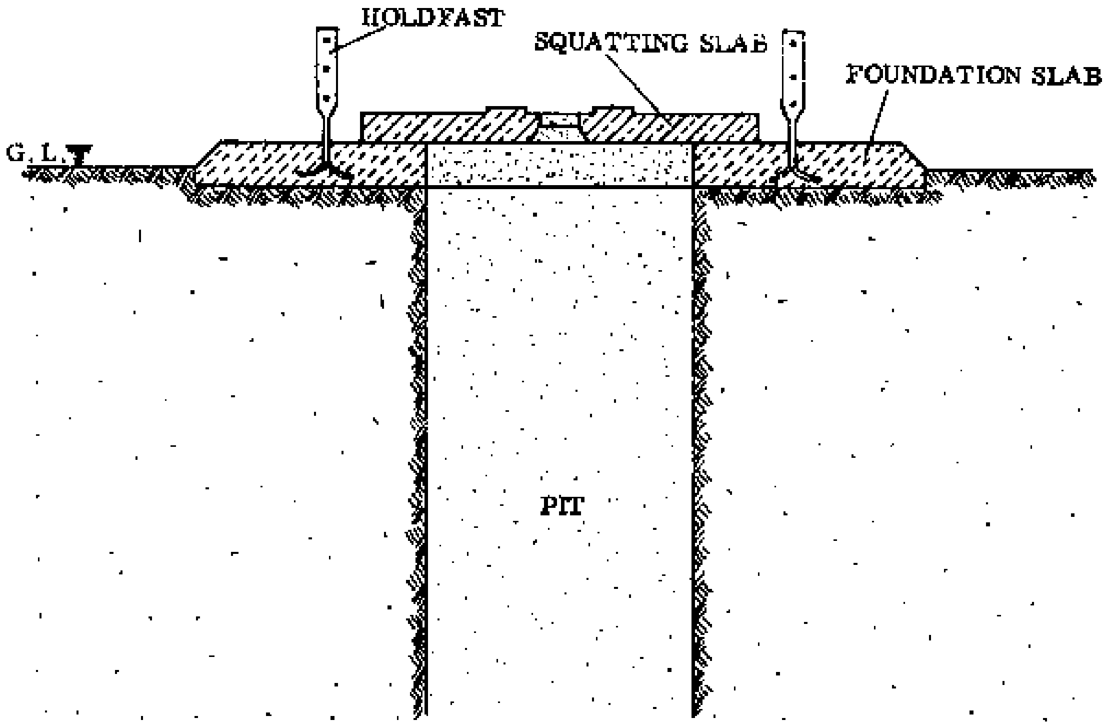

Fig. 3

Toilet room

The toilet room can be built from mud or landcrete blocks, and plastered with mud. However, be sure that the foundation can support the walls because they are heavy, and in soft soil they may sink down and collapse the hole. Also, when the hole is full and a new one has to be dug, the walls have to be built completely new.

Because of the above problems with block walls, it is advisable to construct a light-weight structure out of timber and metal sheets. The light-weight structure can be removed when the pit is full and installed again over a new pit. The squatting slab can also be re-used (Fig. 1).

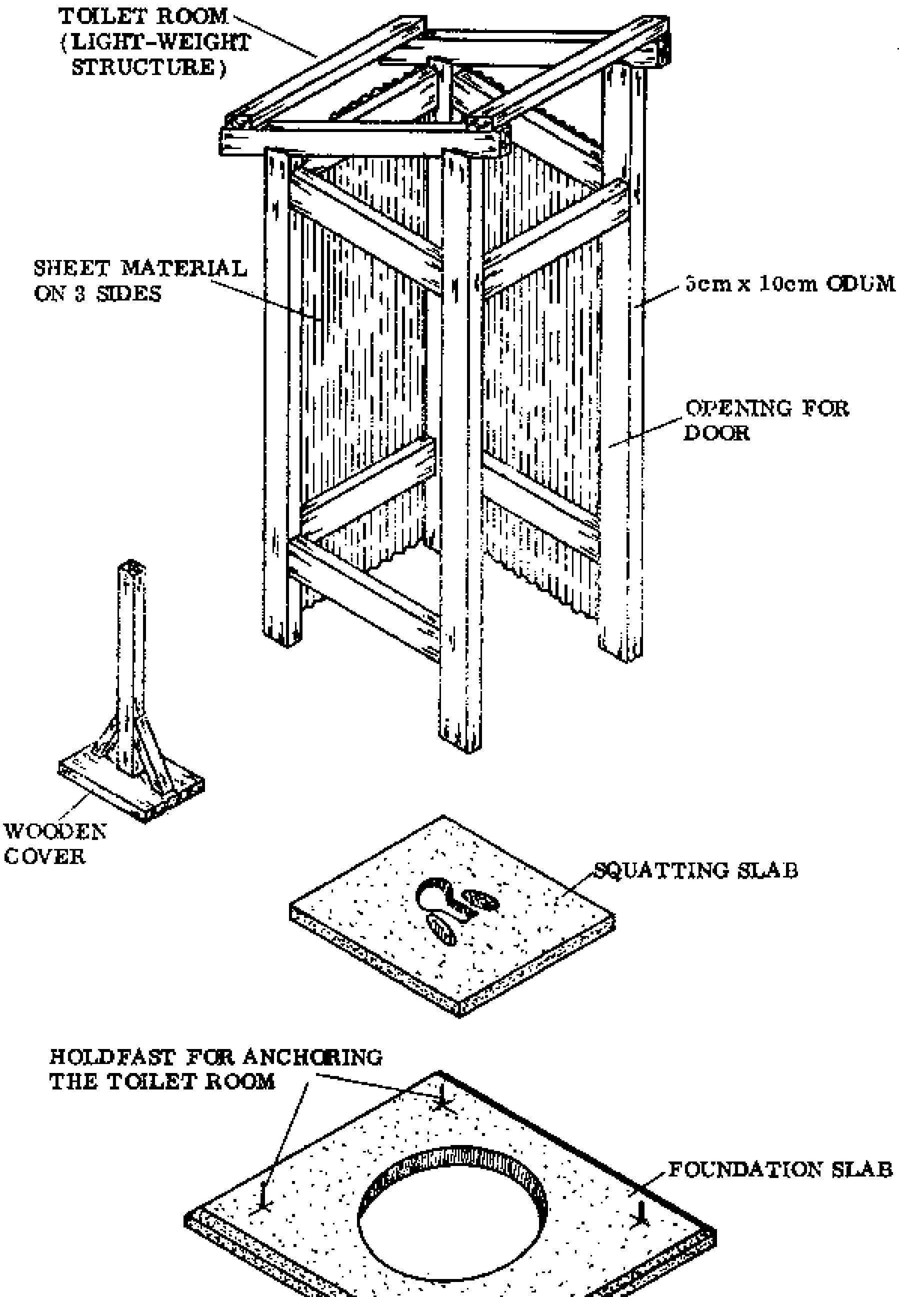

Fig. 1

The structure must be anchored well to the foundation slab so that it is not blown away in strong winds.

Toilet partitions

If a community latrine with several compartments is needed, use the system drawn on page 124 of the Drawing Book.

First do the setting out. Then dig the round pits and make foundation slabs around the pits. Construct arches or lay a reinforced concrete beam across the center of each pit.

There are four squatting slabs over each pit. Lay each one carefully so that one edge rests on the concrete beam and two other sides rest on the foundation slab. Use some weak mortar between the slab and the supports, to ensure that the slabs are flat and stable.

The partitions between the toilets should be light-weight structures of timber and metal sheets or waterproof plywood. The outside walls can be constructed from landcrete blocks or mud.

Many of the materials from the above structure can be re-used after the holes become 2/3rds full and new pits are dug. The light-weight partitions, the squatting slabs and the reinforced beams can all be taken out and used in the new construction.

NOTES:

Permanent latrine

If the latrine is constructed so that the pit can be cleaned out when it becomes two-thirds full, then it is no longer necessary to dig a new pit every few years. In the design explained here, the pit contents are removed through a manhole from the outside of the toilet room.

Make a reinforced concrete beam or an arch across the pit (Figs. 1 & 2) to support the back wall of the toilet, the floor, and the concrete manhole cover (see also the Drawing Book, pages 121 and 124).

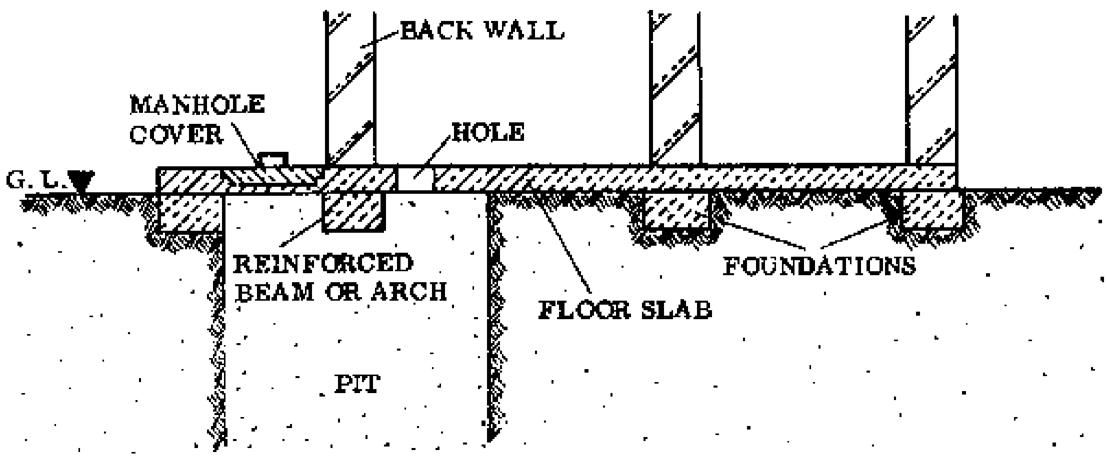

Fig. 1

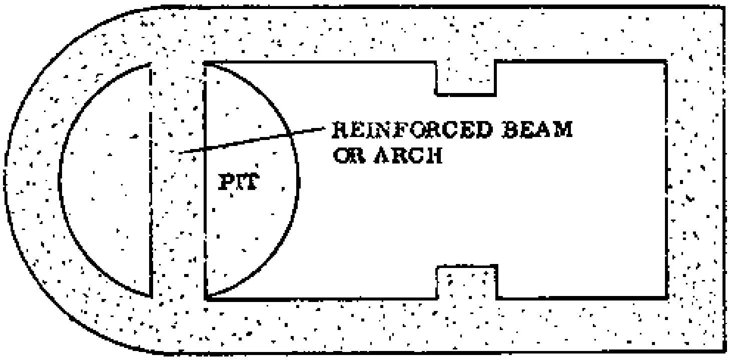

Fig. 2 FOUNDATIONS

Cast the foundations around the pit and under the future walls of the toilet (Figs. 1 & 2). On top of the foundations cast the floor slab with the openings for the manhole and toilet. The toilet can be made with the same squatting slab design as the other latrines, or a seat may be constructed above the hole (Fig. 3).

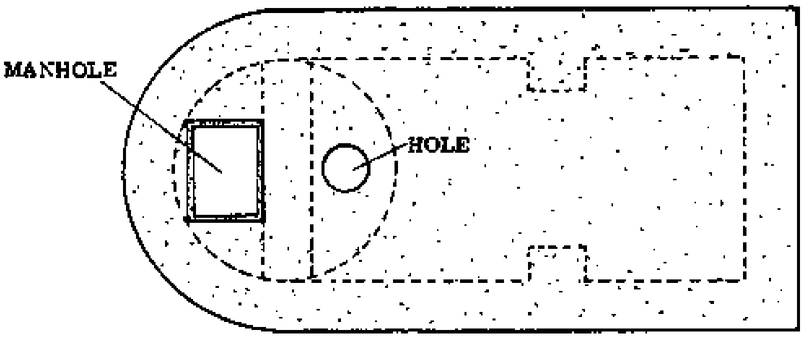

Fig. 3 FLOOR SLAB

The rising walls are constructed directly on top of the floor slab (Fig. 4). They may be built out of mud, sandcrete or landcrete blocks, since the structure will be permanent. Make sure that the toilet room is well ventilated and the roof is securely anchored to the building. The wall in front of the entrance can be built up to about 180 cm high (Fig. 4).

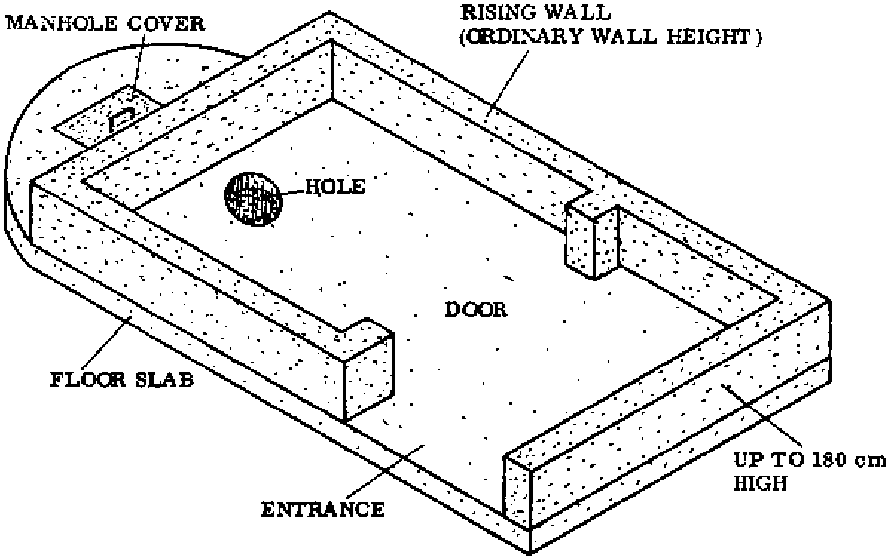

Fig. 4

BUCKET LATRINE

One of the oldest and generally least cleanly systems for waste removal is the bucket latrine. As in the cross section in Fig. 1, the squatting slab is set over a collection chamber with a bucket. The chamber should be closed off with a removable fly screen. The bucket should fit into a niche on the floor, so it is always returned to position directly under the hole in the slab when it is replaced after cleaning.

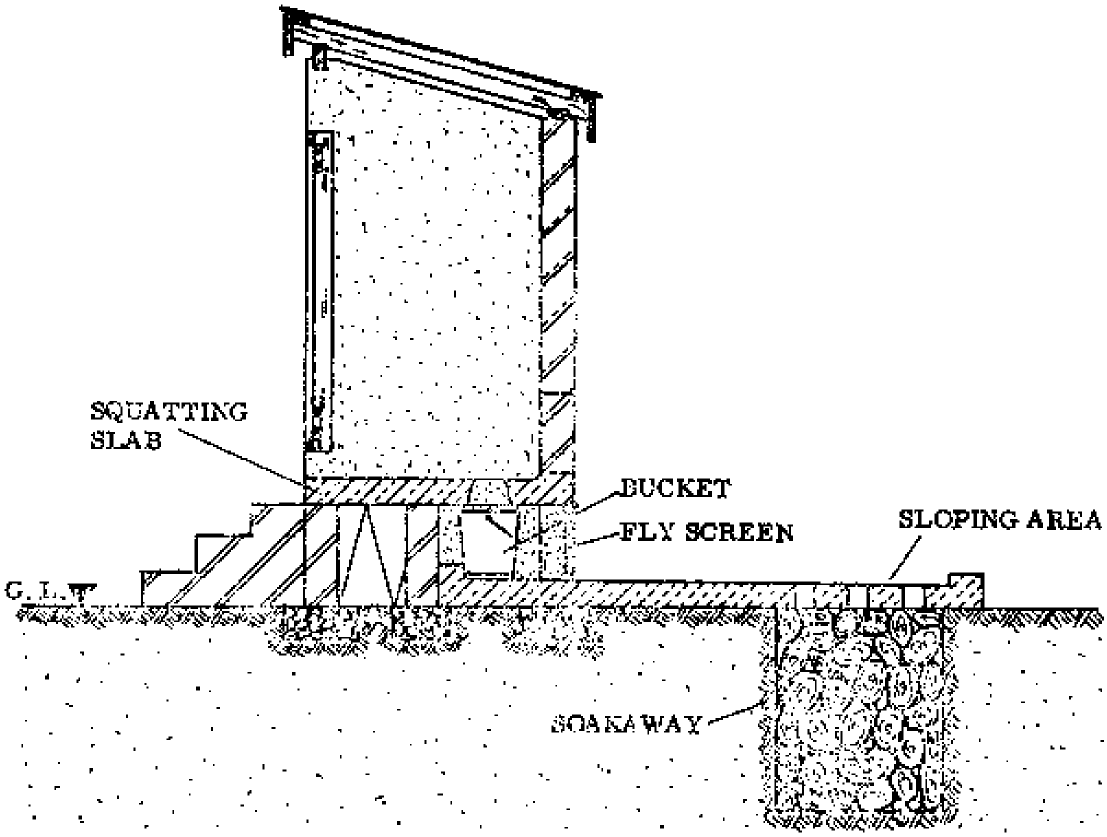

Fig. 1

The area behind the latrine should be paved, and a drain and a soak away should be made to get rid of the water used for cleaning the toilet and collection chamber.

The bucket latrine system is only possible where there is an organized system for regular collection and disposal of the bucket contents. This is usually not possible in rural areas.

AQUA PRIVY SYSTEMS

An aqua privy is basically a septic tank directly under a latrine. Its advantages are that it has fewer problems with smells, flies, and disease spreading than a regular latrine. However, at least two buckets of water must be poured into the privy every day for it to operate properly, and this can be a problem where there is no water source nearby.

An aqua privy for the use of one family may have a pit which is about 1 cubic meter in volume (about 0,15 cubic meters per person). The manhole should be large enough so that the sludge can be removed from the pit from time to time; whenever the tank is one-third full. If the tank is not emptied in time the drain pipe will become blocked and the system will fail.

Add some reinforcement to the squatting slab over the tank to support the back wall of the toilet. Make sure that the inside of the tank is waterproof, because if it leaks the water level cannot be maintained and smells can pass through the chute. If necessary paint the inside walls of the tank with waterproof paint. Make sure that there is a good ventilation system, with a fly screen over the end of the pipe which ventilates the tank (Fig. 2).

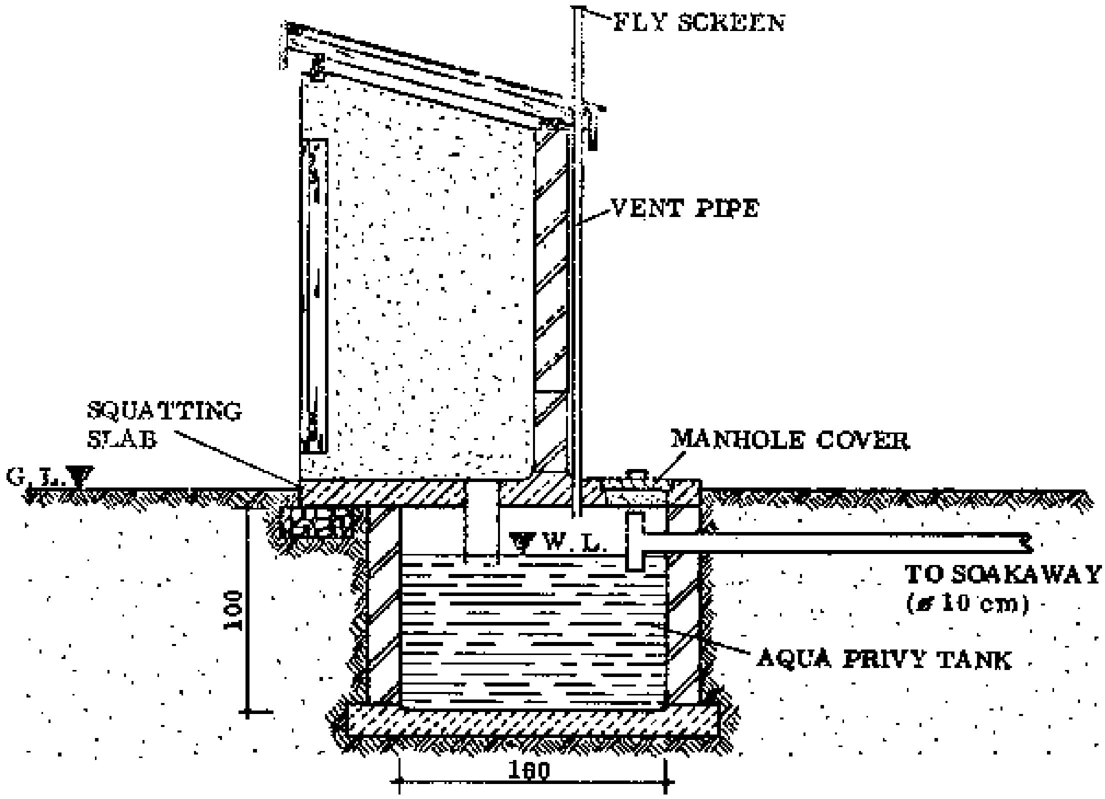

Fig. 2

It is very important to maintain the water level within the tank. If possible, washing facilities can be made nearby and connected with the tank, so that the water from the sink or shower room goes into the tank and maintains the water level.

SOAKAWAYS

A soakaway is basically a hole in the ground filled with stones, through which water can seep away into the surrounding soil instead of forming a pool on the surface of the ground where mosquitos can breed.

Dig a hole and fill it with large stones at the bottom and smaller ones at the top. Drain pipes from bathing areas, etc. can lead into the pit; they should end up in the centre. Cover the soakaway with soil, but make sure that the soil does not enter between the stones and block the drainage pipe. The soakaway can be covered with a layer of concrete to keep the top soil out (Fig. 1, previous page).

Soakaways should be at least 30 m away from wells or streams, and never uphill from a water source.

MANHOLES

Sometimes manholes are needed where long pipes have to be inspected at intervals. Manholes give easy access to the pipe junctions. A typical manhole layout is shown in the Drawing Book, page 125. This manhole can also serve as a kind of junction hole, from which more than one pipe can cross. The slope should be the same for pipes entering and leaving the manhole (Figs. 1a & 1b).

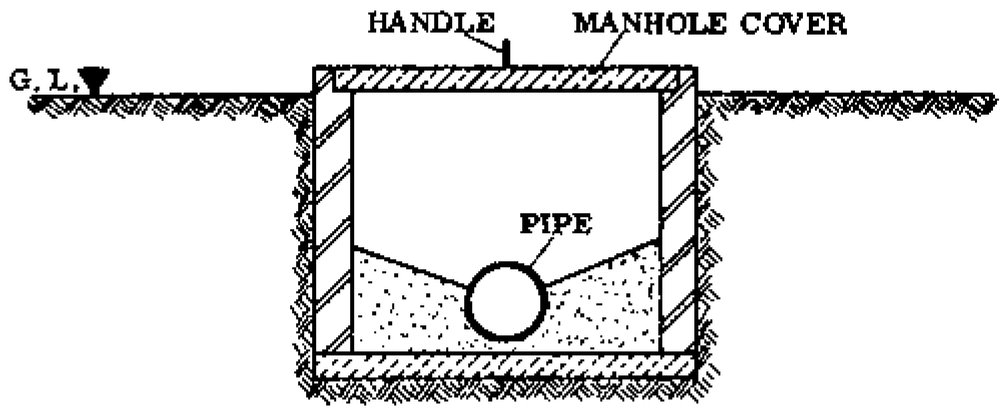

Fig. 1a

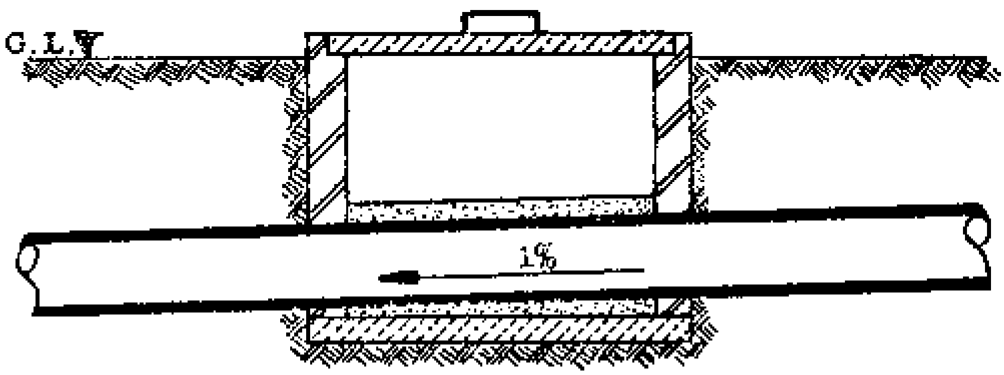

Fig. 1b

SEPTIC TANKS

Septic tanks are designed in such a way that the water takes at least 24 hours to pass through the system. During that time the heavier solids will settle to the bottom, forming the sludge. In the tank the solids are gradually broken down and become much reduced in volume.

Septic tanks should have two compartments (Fig. 2). The first compartment is twice the size of the second compartment. Intermediate walls are sometimes made in order to reduce the speed of the water flow, and to make the distance that the water has to travel longer (Drawing Book, page 126).

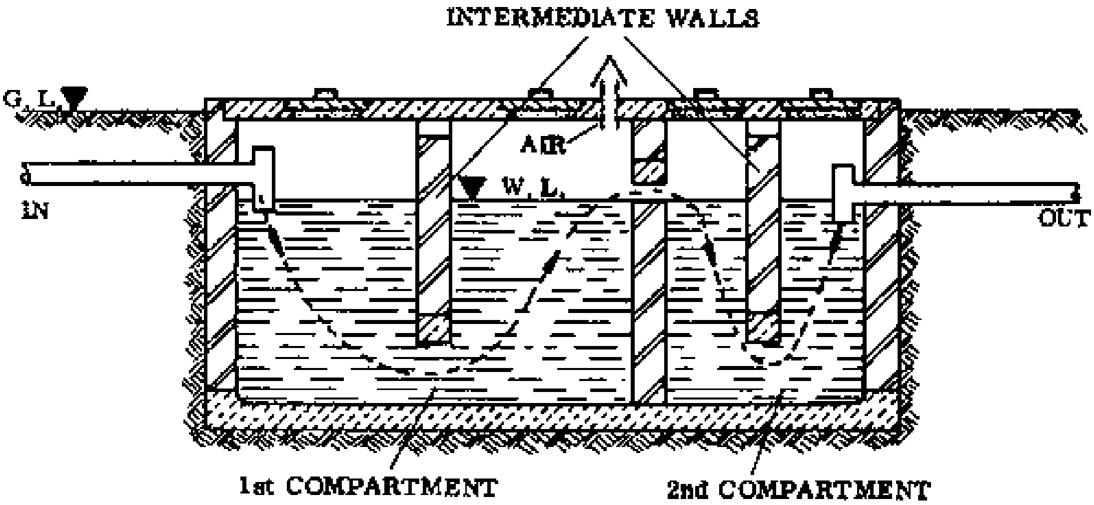

Fig. 2

The sludge has to be removed from the tank every few years, whenever it becomes 1/3 full. This sludge will not be safe to use as fertilizer until it has been composted for several months. The water flowing out from the tank will also be contaminated with bacteria and disease organisms.

NPVC

RURAL BUILDING

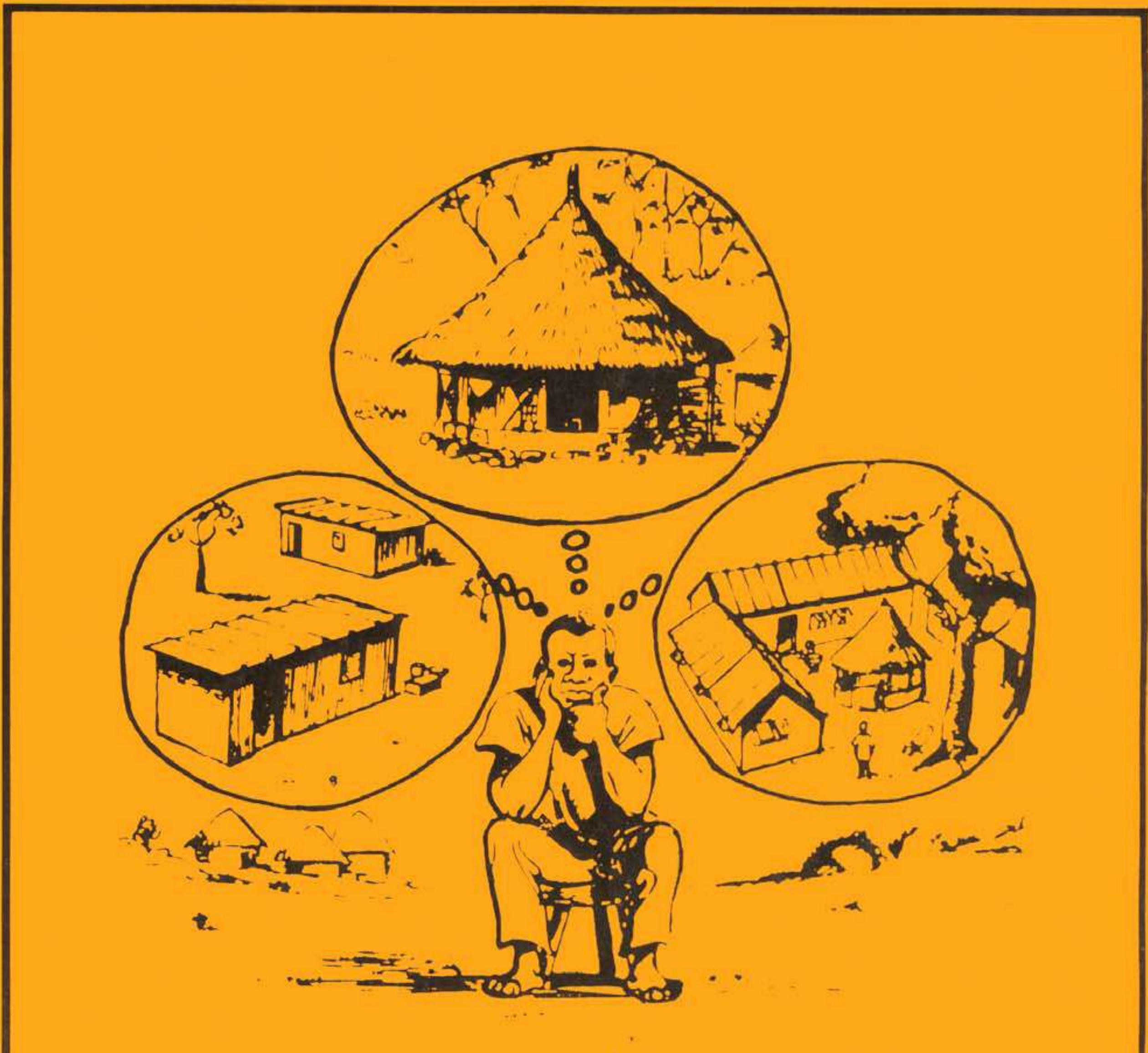

BASIC KNOWLEDGE

PREFACE

This official text book is designed purposely to meet the needs of trainees who are pursuing rural building courses in various training centres administered by the National Vocational Training Institute.

The main aim of this book is to provide much needed trade information in simple language and with illustrations suited to the understanding of the average trainee.

It is the outcome of many years of experiment conducted by the Catholic F.I.C. brothers of the Netherlands, and the German Volunteer Service instructors, in simple building techniques required for a rural community.

The National Vocational Training Institute is very grateful to Brothers John v. Winden and Marcel de Keijzer of F.I.C. and Messrs. Fritz Hohnerlein and Wolfram Pforte for their devoted service in preparing the necessary materials for the book; we are also grateful to the German Volunteer Service and the German Foundation For International Development (DSE) - AUT, who sponsored the publication of this book.

We are confident that the book will be of immense value to the instructors and trainees in our training centres.

DIRECTOR: National Vocational Training Institute, Accra

INTRODUCTION TO A RURAL BUILDING COURSE

Vocational training in Rural Building started in the Nandom Practical Vocational Centre in 1970. Since then this training has developed into an official four year course with a programme emphasis on realistic vocational training.

At the end of 1972 the Rural Building Course was officially recognised by the National Vocational Training Institute. This institute guides and controls all the vocational training in Ghana, supervises the development of crafts, and sets the examinations that are taken at the end of the training periods.

The Rural Building programme combines carpentry and masonry, especially the techniques required for constructing housing and building sanitary and washing facilities, and storage facilities. The course is adapted to suit conditions in the rural areas and will be useful to those interested in rural development, and to farmers and agricultural workers.

While following this course, the instructor should try to foster in the trainee a sense of pride in his traditional way of building and design which is influenced by customs, climate and belief. The trainee should also be aware of the requirements of modern society, the links between the old and new techniques, between traditional and modern designs - and how best to strike a happy medium between the two with regard to considerations like health protection, storage space, sewage and the water supply. The trainee should be encouraged to judge situations in the light of his own knowledge gained from the course, and to find his own solutions to problems; that is why this course does not provide fixed solutions but rather gives basic technical information. The instructor can adapt the course to the particular situation with which he and the trainee are faced.

This course is the result of many years of work and experimentation with different techniques. The text has been frequently revised to serve all those interested in Rural Development, and it is hoped that this course will be used in many vocational centres and communities. It is also the sincere wish of the founders of this course that the trainees should feel at the completion of their training that they are able to contribute personally to the development of the rural areas, which is of such vital importance to any other general development.

We are grateful to the Brothers F.I.C., the National Vocational Training Institute and the German Volunteer Service for their assistance and support during the preparation of this course.

Bro. John v. Winden (F.I.C.)
Wolfram Pforte (G.V.S.)
Fritz Hohnerlein (G.V.S.)

LAY-OUT OF THE RURAL BUILDING COURSE

The Rural Building Course is a block-release-system course, which means that the trainee will be trained in turn at the vocational centre and at the building site. The period of training at the centre is called “off-the-job” training, and the period on the building site is called “on-the-job” training. Each will last for two years, so that the whole course will take four years and will end with the final test for the National Craftsmanship Certificate.

<u>BLOCK RELEASE SYSTEM</u>

YEAR	TERM 1	TERM 2	TERM 3
1	X	X	X
2	O	O	O
3	O	X	O
4	X	O	X

X = OFF-THE-JOB TRAINING
O = ON-THE-JOB TRAINING

The total “off-the-job” training period is approximately 76 weeks, each week 35 hours. During this training about 80% of the time is spent on practical training in the workshop. The remaining 20% of the time is devoted to theoretical instruction.

The total “on-the-job” training period is approximately 95 weeks, each week 40 hours. During this period the trainee does full-time practical work related to his course work. In addition some “homework” is assigned by the centre and checked by the instructors.

A set of books has been prepared as an aid to the theoretical training:

A - Rural Building, Basic Knowledge (Form 1)
B - Rural Building, Construction (Forms 2, 3, 4)
C - Rural Building, Drawing Book (Forms 1, 2, 3, 4)
D - Rural Building, Reference Book

All these books are related to each other and should be used together. The whole set covers the syllabus for Rural Building and will be used in the preparation for the Grade II, Grade I, and the National Craftsmanship Certificate in Rural Building.

CONTENTS

BOOK INTRODUCTION

Rural Building, Basic Knowledge is your first construction book. This book plus most of the Reference Book (Rural Building Tools, Maintenance of Tools, Materials and Building Products) will be treated in the first year of centre training.

This book is divided into three parts:

PART 1: BASIC MASONRY TECHNIQUES

This part covers the very basic techniques of masonry. These include the preparation of mortar, blocklaying, the proper arrangement of blocks, and building up walls. Some of the techniques mentioned in the section on the arrangement of blocks are techniques used mainly for bricklaying and therefore only apply to areas where bricks are available.

PART 2: BASIC CARPENTRY TECHNIQUES

The basic techniques covered here include planning construction pieces, preparing wood for construction pieces, ways of fastening the pieces and the important types of joints and how to construct them.

PART 3: PREPARATION FOR ON-THE-JOB TRAINING

This part is meant to be a preparation for the trainee's first year of on-the-job training. It should enable him to follow the basic procedures he is confronted with on a building site, and to understand the technical terms used there. This part of the book doesn't attempt to give detailed information about technical problems but merely to give an idea of them and to enable the trainee to understand the terms and deal with situations on the building site. Most of the procedures will be treated more intensively in the Construction and Drawing books.

At the beginning of both the carpentry and masonry sections there is a list of the terms you will need to know, together with explanations.

You will often be asked to refer to one of the supplementary books for additional information. Especially in the first part of the course, much of the basic knowledge you will need about tools and materials and products will be found in the other books.

You should prepare yourself for each lesson by reading the material before class and looking up the references given in the text for the Reference Book or Drawing Book. If you are not familiar with a tool that is mentioned, now is the time to look in the Reference Book and learn about the tool and how to use it.

There is ample space provided in the book for making notes and sketches.

SAFETY FIRST

When you first start doing construction work it is essential to realize the importance of being safety conscious. You must develop safe working habits in order to prevent injuries to yourself and others.

Accidents can generally be avoided by using ordinary care and skill. Most accidents are a result of thoughtlessness or carelessness on the part of some person.

To practise any kind of craftwork you need your hands, your legs and feet, a healthy body, and most of all your head.

Safety first means that you use your head and think out what you are going to do before going ahead with the job. By first thinking the operation through, you will discover that there is a correct way of doing the task, and some other ways of doing it that may cause danger to yourself and others. Look in the beginning of your Reference Book for a list of general safety rules.

Follow the safety rules, but also use your own sense. When you realize that certain actions can be dangerous, you can plan to prevent accidents and injuries. Look ahead to find the dangerous points of a task and plan to make them safe by taking proper precautions. We can make hundreds of safety rules, but they are useless unless we understand why they are needed and we all cooperate in following them.

One of the most important safety precautions is learning to use the right tool for the job, and in the correct way. The correct way is the safest way.

RESPECT OTHER PEOPLE: RESPECT YOURSELF!

PART 1: BASIC MASONRY TECHNIQUES

TECHNICAL TERMS

Before describing the methods used in bonding it is necessary to briefly define and explain a few of the technical terms commonly used.

- SUN-DRIED TRAINING BLOCKS: These blocks, as the name implies, are dried in the sun, because they do not contain cement (Fig. 1). They are often used by beginners during their first terms of in-centre training, as they are easy to make and to handle.

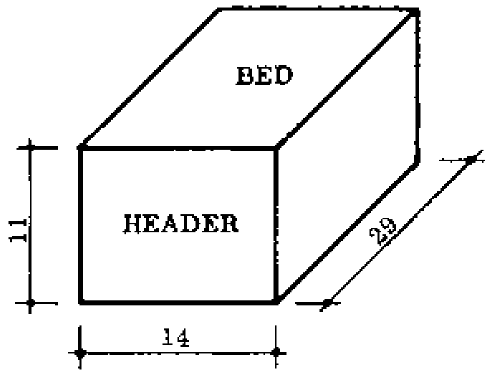

Fig. 1 SUN-DRIED TRAINING BLOCK

The dimensions of these blocks are approximately 29 cm × 14 cm × 11 cm, which allows us to construct complicated bonds with them. They can be used to make an excellent inside wall also, as the following chapters will describe.

- LANDCRETE BLOCKS: These are blocks used for actual building (Fig. 2).

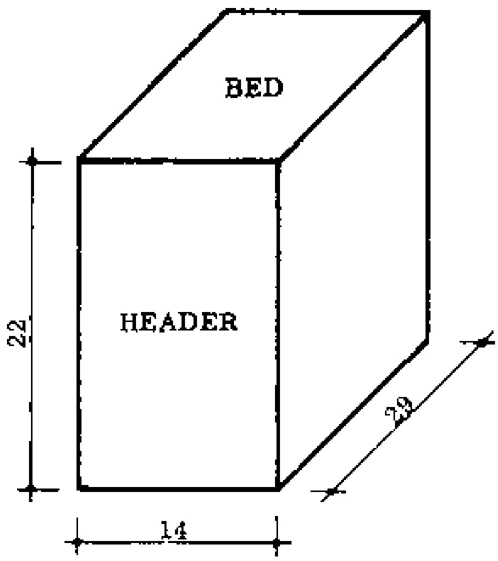

Fig. 2 LANDCRETE BLOCK

- SANDCRETE TRAINING BLOCKS: These are specially made small sandcrete blocks with the approximate dimensions of 24 cm × 14 cm × 11, 5 cm; so they can be used to teach the making of more complicated bonds (Fig. 3).

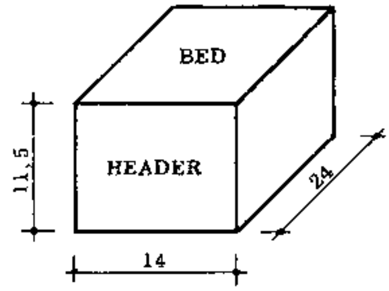

Fig. 3 SANDCRETE TRAINING BLOCK

Like the sun-dried blocks, they are often used in training because they are easy to handle. As they are made with cement they can be used for a long time before they wear out.

- SANDCRETE BLOCKS: This type of block is used for actual building (Fig. 4).

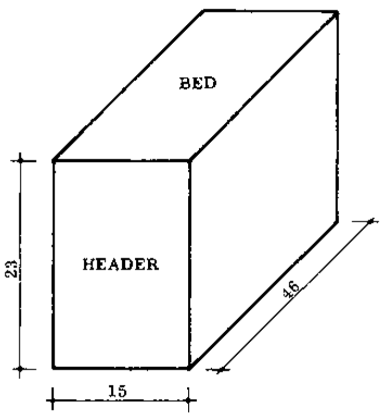

Fig. 4 SANDCRETE BLOCK

- 3/4 - 1/2 - 1/4 - BLOCKS: These are parts of blocks obtained by cutting a block through either the centre line or the quarter line, less half the thickness of the joint (Fig. 5). The cut is made along the width, not along the length. A special block gauge may be used for marking off the different sizes.

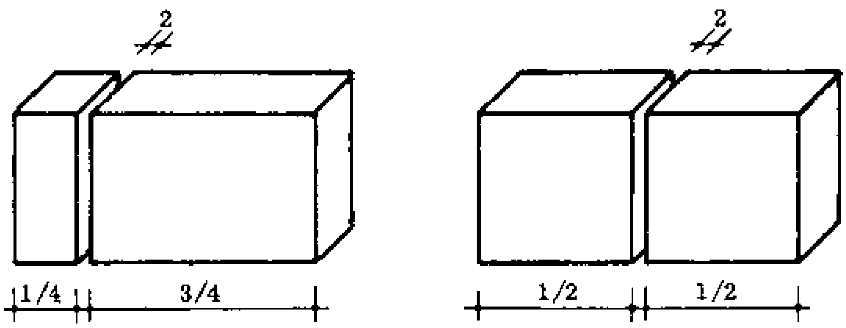

Fig. 5 1/4 - 1/2 - 3/4 BLOCKS

- HEADER: A block is known as a header when it is placed in a wall so that its smallest face is exposed (Fig. 1, next page).

- BED: The under-surface of a block, or the mortar on which the block is laid.

- STRETCHER: If the biggest face of a block is exposed, the block is called a stretcher (Fig.

1, next page). This is the way most blocks are laid in Rural Building, and we say that the block is laid edgewise. If a block is laid flatwise, so it is actually showing the top face, it is also called a stretcher (Fig. 1, next page).

- COURSE: This is the term applied to each layer or row of blocks, with the bed joint included (Fig. 1, next page).

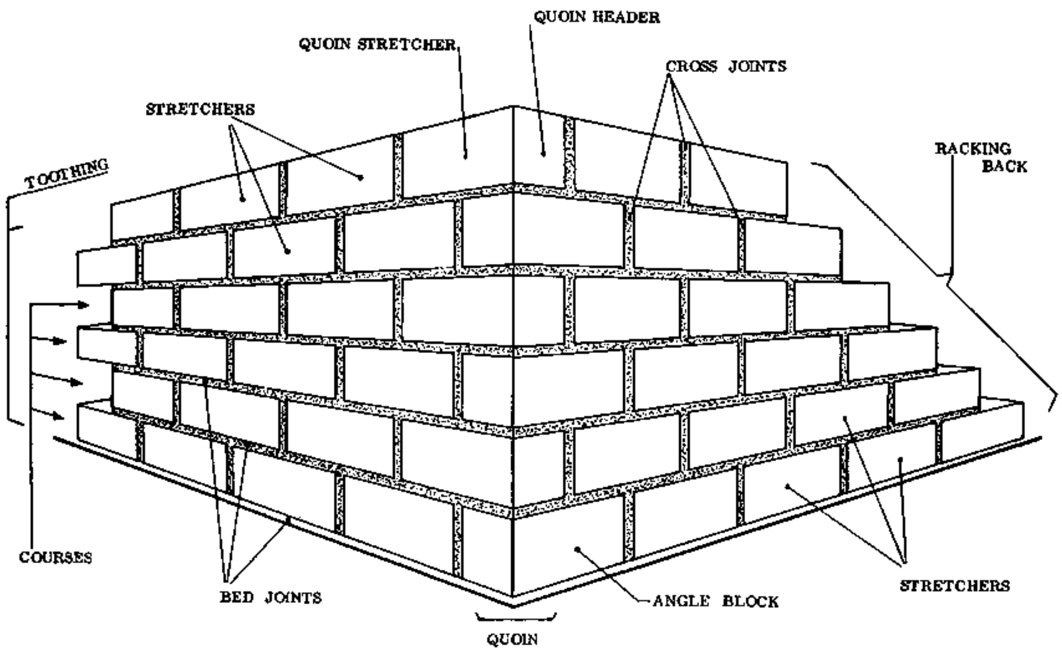

Fig. 1

- BED JOINT: This is the horizontal mortar joint between two courses (Fig. 1).

- CROSS JOINT: The vertical joints between the blocks (Fig. 1).

- QUOIN: The quoin is the outside corner of a wall or the external angle on the face side of the wall (Fig. 1).

- ANGLE BLOCK: This is the block which actually forms the corner in each course (Fig. 1).

- STOPPED END: A plain vertical surface which forms the end of a wall (see page 21).

- TOOTHED END OR TOOTHING: The form produced at the end of a wall by recessing every other course by half a block (Fig. 1) in order that the wall may be extended later using the same bond.

- RACKING BACK: As an alternative to toothing, the end of a wall may be set back half a block at each course (Fig. 1). This is also done so that the wall may be extended later using the same bond.

- BUILDING UNIT: This refers to the dimensions of a full block, plus one joint. For sandcrete blocks the building unit is 25 cm high by 48 cm long (2 cm joints).

- FOUNDATION: The base, usually concrete, on which the building rests. It is usually set below ground level, and is the only part of the building in direct contact with the ground.

- FOOTINGS: The courses laid directly on top of the foundations; usually three flatwise courses of sandcrete blocks (see page 35).

- PLINTH COURSE: The edgewise course of sandcrete blocks laid on top of the footings (see page 35).

- RISING WALL: The edgewise courses of sandcrete or landcrete blocks which build up the rest of the wall (see page 35).

NOTES:

BONDING OF WALLS

The practise of blocklaying requires a complete understanding of the correct arrangement of the blocks forming a wall. This correct arrangement of blocks, regardless of the method, is known as bonding.

The blocks are placed so that they overlap each other and care must be taken to ensure that as far as possible no vertical joint is immediately above another vertical joint in the course below.

General effect of bond

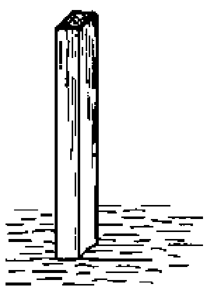

Fig. 1 POLE GIVES WAY AND SINKS DOWN

Fig. 1 shows a wooden pole placed vertically on soft ground. If this pole has to carry a heavy load it will sink down into the soil, because the total area on which the pole rests on the ground is far too small to support it (Fig. 2).

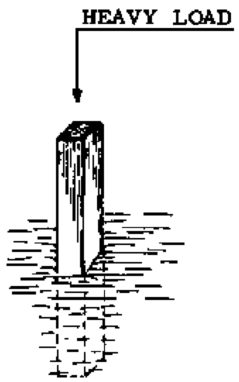

Fig. 2 POLE GIVES WAY AND SINKS DOWN

A possible solution to the problem is shown in Fig. 3: a board is laid flat on the ground and it now carries the pole with the load. In this way the total load is distributed over a larger area of ground and it is impossible for the pole to sink down.

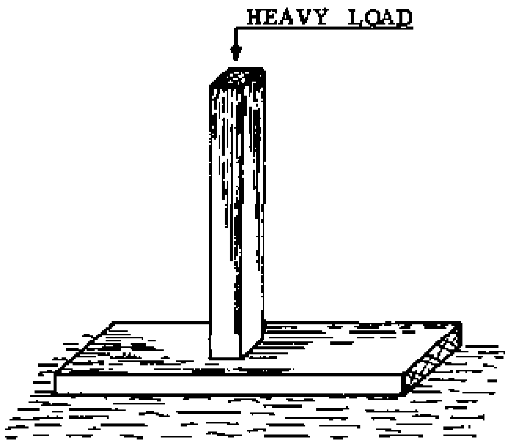

Fig. 3 LARGER AREA OF BOARD PREVENTS POLE FROM SINKING DOWN

If a wall is built up by simply placing blocks directly above each other, we say the wall is built without bond. If a heavy load is put on top of this wall (Fig. 4) the column of blocks immediately under the load tends to give way and sink down.

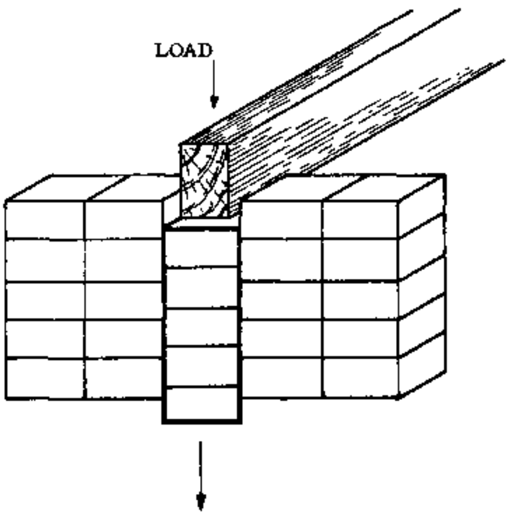

Fig. 4

In order to make the wall stronger in itself and able to distribute loads properly, the Rural Builder applies the so-called half-block bond.

A properly bonded wall which receives a heavy load will distribute the pressure over a large number of blocks and therefore over a much greater area (Fig. 5).

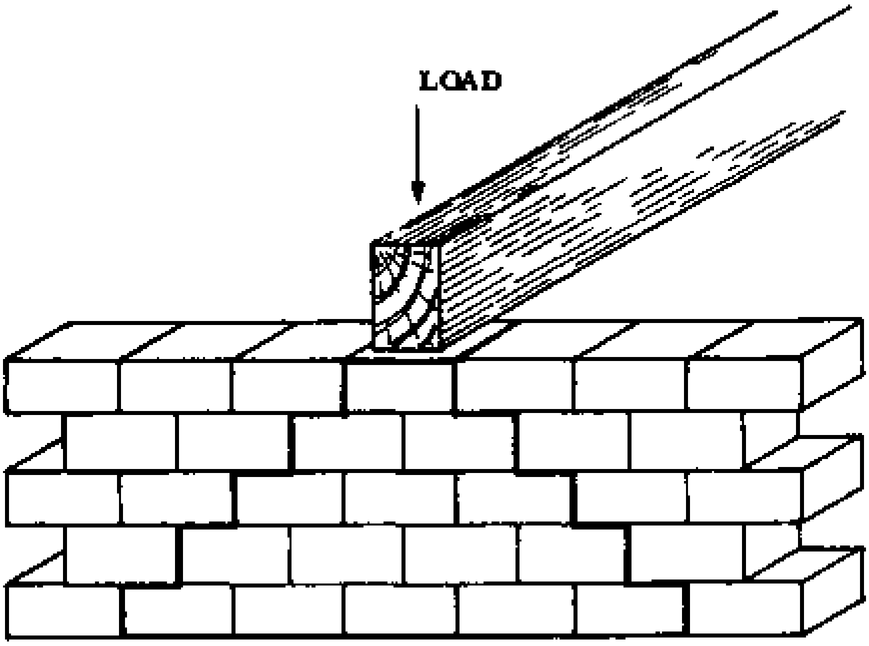

Fig. 5

NOTES:

Half-block bond

The simplest form of bonding is that where all the blocks are laid down as stretchers, each block overlapping the one below by half its length (Fig. 1).

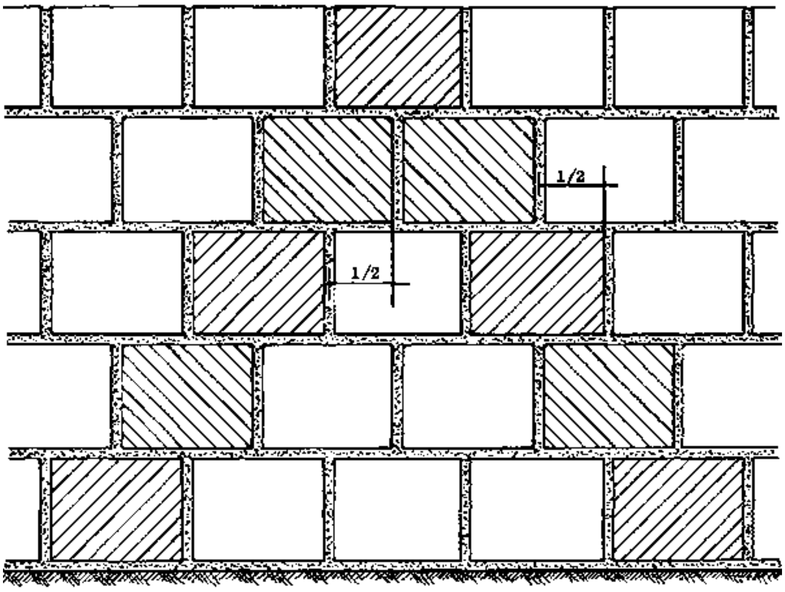

Fig. 1 HALF-BLOCK BONDING (LANDCRETE)

SCALE 1: 10 (cm)

This form of bonding is only suitable where a one-block thickness of the wall is sufficient. In Rural Building the most common wall thickness is 14 cm when landcrete blocks are used and 15 cm when using sandcrete blocks; provided that they are laid edgewise.

If for some reason a thicker wall is required, the blocks may be laid flatwise. By doing this the wall thickness will be increased to 23 cm, 29 cm or even 46 cm depending on the type of block and the way the blocks are laid.

Other types of bond

There are many types of bond in use, the two most common being the English Bond (Fig. 2) and the Flemish Bond (Fig. 3), both of which are used with bricks.

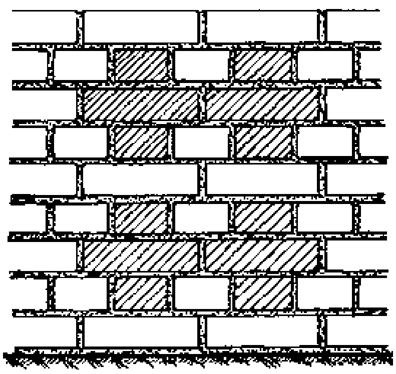

Fig. 2 ENGLISH BOND SCALE 1: 10 (cm)

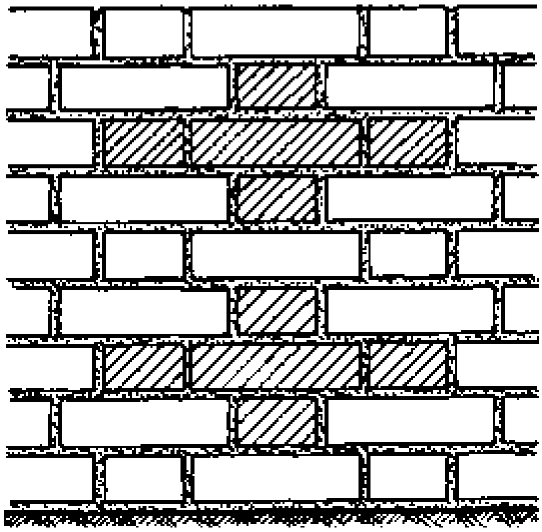

Fig. 3 FLEMISH BOND SCALE 1: 10 (cm)

Bricks are smaller blocks with approximate dimensions of 24 cm × 11, 5 cm × 7 cm.

- ENGLISH BOND: This bond consists of alternate courses of headers and stretchers. The centre of any stretcher is in line with the centre of the header in the courses above and below.

- FLEMISH BOND: This bond consists of alternate headers and stretchers in the same course. Again, the centre of any stretcher is in line with the centre of the header in the courses above and below.

NOTES:

HANDLING THE TROWEL

In the process of laying blocks, the brick trowel is used to perform a series of operations during which the trowel is seldom put down or changed from one hand to the other.

All operations require free and easy manipulation of the trowel from the wrist and it is therefore essential to master the correct handling of the trowel.

Fig. 1 illustrates the correct grip on the handle, with the thumb resting on the ferrule. The thumb must be in this position in order to manipulate the trowel skillfully.

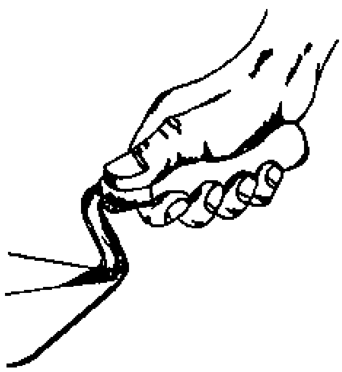

Fig. 1 CORRECT GRIP

The amount of mortar picked up from the headpan will depend on the nature of the job, but for the trainee it is advisable to pick up a sufficient amount to lay one training block, i.e. a heaped trowel. Later, when working with the common big blocks, it will become necessary to pick up two trowelfuls of mortar.

Preparing the bed joint

Place the mortar in the middle of the wall or the marked position of the first course and spread it out by a pushing movement with the back of your trowel, into a layer about 3 cm thick (Fig. 2).

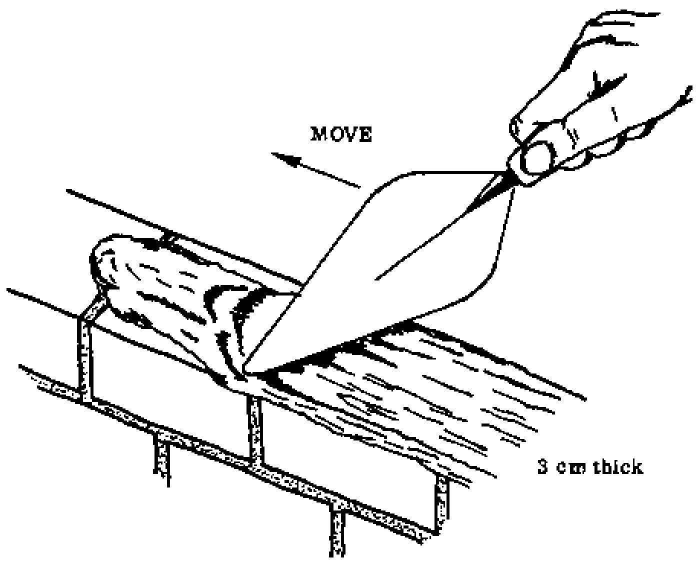

Fig. 2

Next draw the point of your trowel through the centre of the layer, making a mortar bed suitable for the block (Fig. 3).

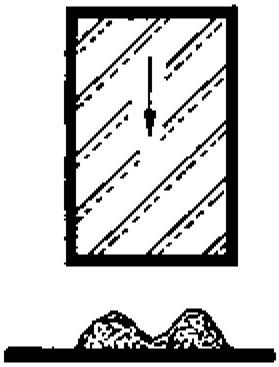

Fig. 3

A block laid on a bed prepared in this way will at first rest on the two outer edges, but when it is pressed down to its correct position it will not only squeeze mortar from the front and back of the block but will also squeeze it into the valley in the centre. In this way a solid bed is formed (Figs. 3, 4, & 5).

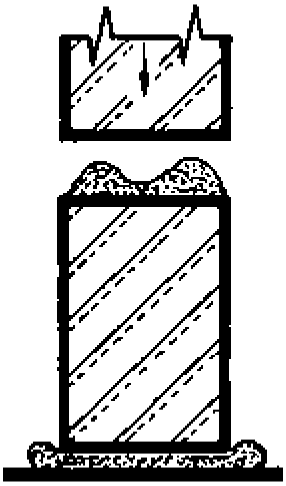

Fig. 4

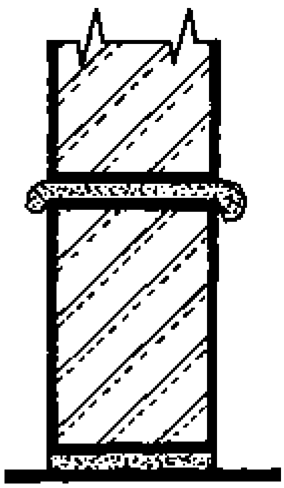

Fig. 5

- NOTE: All the tools mentioned in this section on masonry techniques are described in the Rural Building Reference Book, pages 3 to 15.

NOTES:

Removing surplus mortar

Before and after the block is layed, a certain amount of mortar will project from both sides of the wall. This must be removed before it drops down, as one of the most important principles of the Rural Builder is to work as economically as possible. This means saving materials. Fig. 1 shows the position of the trowel for these operations.

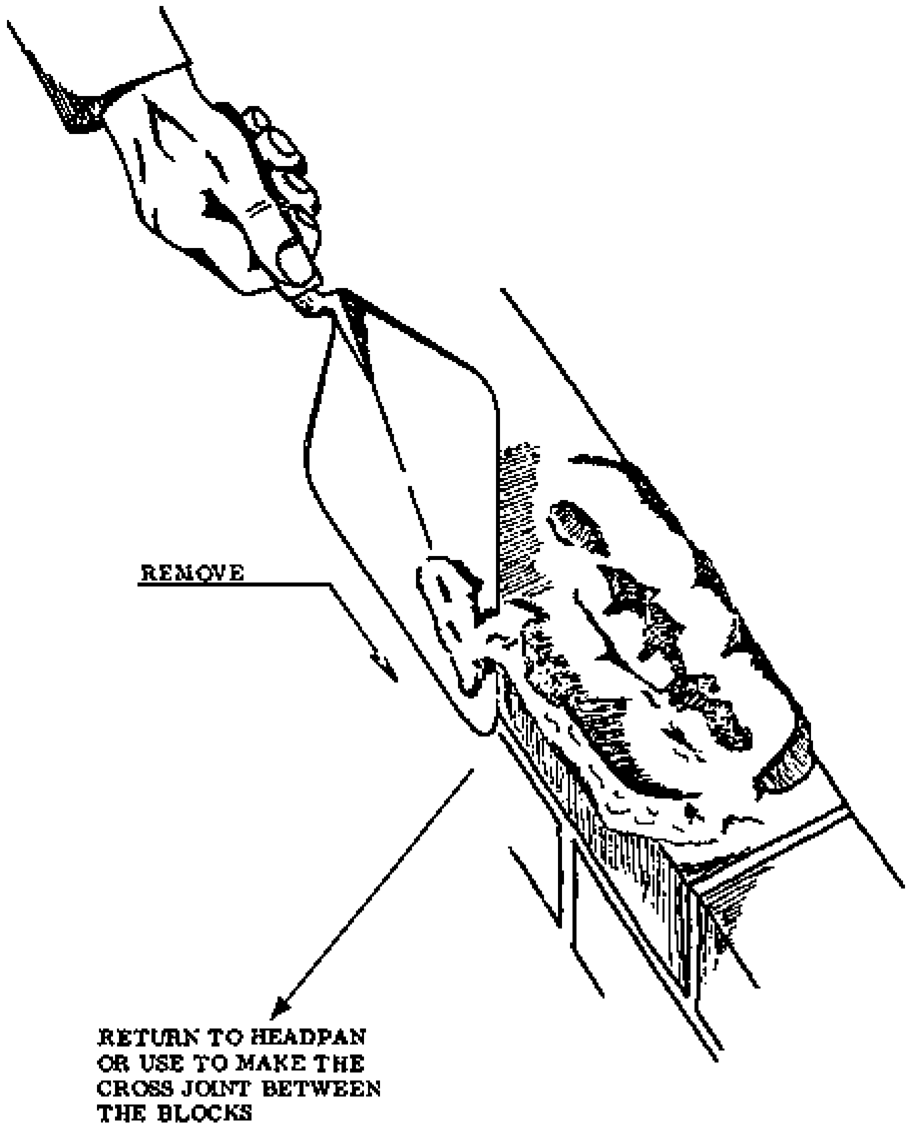

Fig. 1

The surplus mortar recovered on the trowel is usually taken to form the cross joint between the last laid block and the previous one, or it is returned to the headpan.

NOTES:

THE FIRST WALL

Setting out

Before actual building operations are started, you must know the correct position and dimensions of all the parts of the building.

This information is given in the plan or drawing of the building, which of course must have been already prepared and at hand.

The positions of the walls, for instance, have to be marked on the ground according to the measurements given on the plan before any building operation starts.

This operation is called “setting out” and we will deal with it repeatedly here, because it is one of the most important preparatory steps in building.

Organizing the work

The workplace has to be well organized in order to operate smoothly and safely.

Building materials such as blocks and mortar should be neither too close nor too far away from the wall being erected. A working space of about 90 cm will usually be all right. The blocks should be neatly stacked, not just thrown in a heap; and there should always be an adequate supply available, so that work is not delayed by waits for materials.

Keep your tools together and near your workplace so they are within easy reach. When you use a tool, put it back immediately afterwards so that it cannot fall off the wall etc. and injure you or other workers. Make a habit of putting your tools down in a way that prevents accidents.

- NOTE: You cannot expect to produce a good job with your tools and materials always scattered around. Neatness and orderliness show the professional.

Never throw, kick or drop tools as you might damage them.

Work on one side of the wall only. As the wall becomes higher, you won’t be able to move from side to side anyway.

NOTES:

Preventive measures

Almost all of the building in the Northern and Upper Regions of Ghana is done during the dry season, with its high temperatures and low humidity. These conditions are important and our building procedures must take them into consideration to prevent problems with drying out.

Before you put the mortar down and spread ft, thoroughly wet the top of the foundation or the already laid course.

Do the same thing with the block that you are going to lay next. This is to prevent the block from absorbing too much moisture from the mortar. The porous landcrete or sandcrete blocks quickly suck in any moisture they come into contact with. This process is known as absorption. If the blocks absorb too much moisture from the mortar, it will not be able to set properly, and the joints will be weak. By sprinkling sufficient water onto the blocks, we ensure that there will be enough moisture left in the mortar to allow it to harden properly.

It is also important to never spread too much mortar at one time. Some masons prepare the mortar bed in advance for five, six or even more blocks in order to speed up the work. This is wrong.

While the first blocks are placed, lined-out, and levelled, the rest of the mortar is exposed for too long to the sun and air.

Due to the high temperatures and the low humidity, the mortar dries out very fast. As a result the mortar becomes too stiff, making it difficult to lay the last blocks and weakening the grip between the mortar and the block. The end result is a weak wall.

The Rural Builder should always keep in mind the dry climate and never spread more mortar than is actually needed.

NOTES:

The first blocks

After you have wetted the block and the area where it is supposed to be set, spread the mortar according to the method described on page 12. Set the block immediately onto the mortar bed and press it down firmly and evenly (Fig. 1).

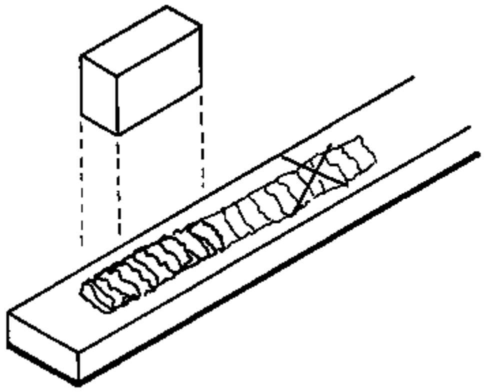

Fig. 1 SET THE BLOCK ON THE MORTAR

If the bed has been spread correctly, only a few taps with the handle of the trowel will be needed to adjust the height of the block. The height is checked by comparing the height of the block with the gauge marks on the straight edge (Fig. 2).

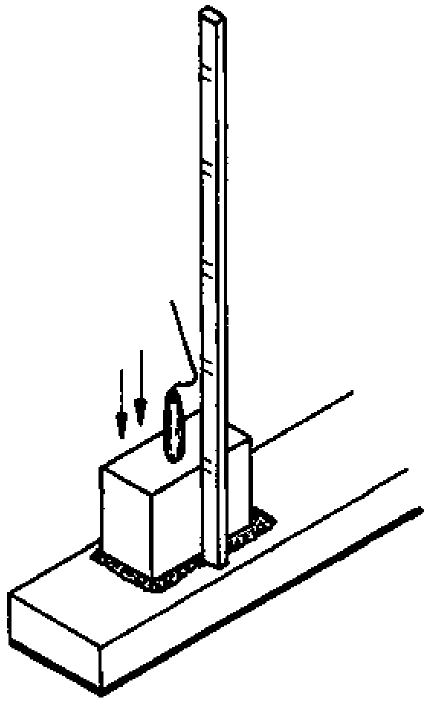

Fig. 2 CHECK THE HEIGHT

Next, plumb the block with the spirit level along the stretcher face and the header face as shown in Fig. 3. The pressure on the block will have squeezed out some of the mortar. Trim off this excess, collect it on the trowel and return it to the headpan.

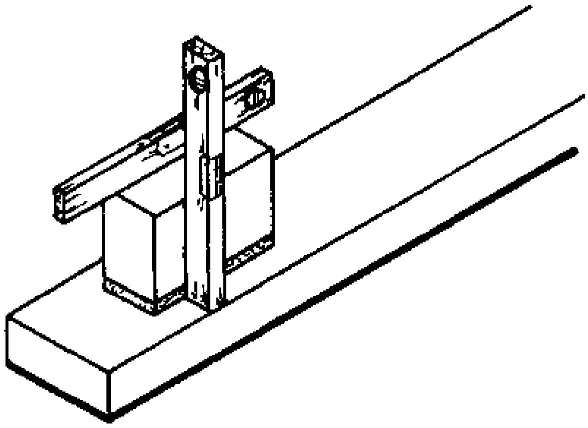

Fig. 3 PLUMB AND LEVEL THE BLOCK

If you don't use enough water to make the bed, the block will not come up to the required height; it will sit too low. If on the other hand too much mortar is used, the block will sit too high.

Do not try to correct problems like this by pushing some mortar from the edges towards the inside of the bed using your fingers; or by knocking hard on the top of the block to try and force it down. These are very poor practices. Instead, Simply remove the block and re-spread the mortar.

At the beginning of the training you will have to re-lay blocks quite often. As you gradually gain experience you will be able to spread just enough mortar to lay one block, without any of the problems mentioned above.

Lay the second block at a distance of four building units and one joint away from the first block (Fig. 4). Hold the straight edge against the stretcher faces of the two blocks to make sure that they are in line.

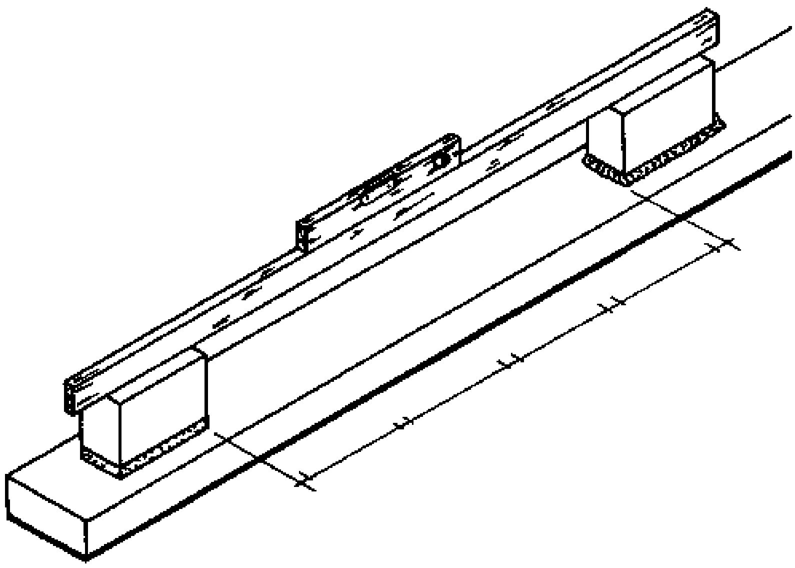

Fig. 4 LAY THE SECOND BLOCK MAINTAIN THE CORRECT DISTANCE OF 4 BUILDING UNITS PLUS 1 JOINT.

NOTES:

The first course

Because the first two blocks are in line and at the same height, we can complete the course without using the spirit level, only using the straight edge. Starting from either block (but still working on only one side of the wall) more blocks are inserted between the first two (Fig. 1).

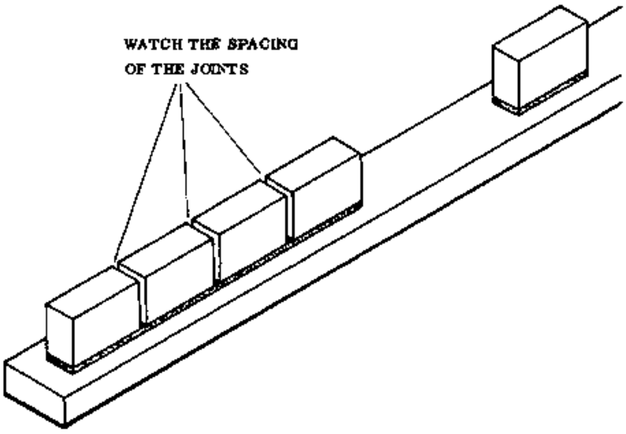

Fig. 1 LAYING THE FIRST COURSE

Their height is adjusted by placing the straight edge on top and pressing the blocks down until the top surfaces of all the blocks touch the straight edge equally, along their whole length.

Line out the course (make it perfectly straight) by holding the straight edge against the stretcher faces and moving the blocks until they touch it along their full length.

During these operations take care to maintain the proper distances between the blocks. The next step is to fill the remaining open gaps between the blocks with mortar, thus forming the cross joints. This job is done by closing the back of the gap with the aid of a small wood float while carefully pushing the mortar down into the joint with the trowel (Fig. 2).

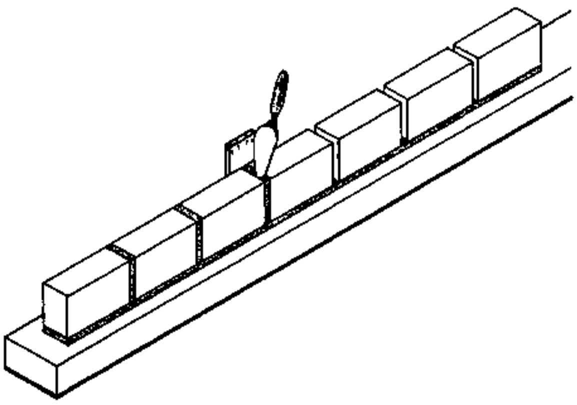

Fig. 2 FILLING UP THE CROSS JOINTS

REMEMBER: RETURN SURPLUS MORTAR TO THE HEADPAN!!

All cross joints must be completely filled up with mortar so that no holes are left, which would reduce the strength of the course and the whole wall.

All the excess mortar which has dropped down or was squeezed out of the bed must now be collected and returned to the headpan to be mixed with the rest of the mortar.

NOTES:

The second course

Lay the first block of the second course with its centre exactly above the first cross joint so that it overlaps both blocks below equally.

No matter what sort of wall-ending is desired, the first block of the second course is always a full block laid above the first cross joint between two stretchers. This is known as the 1-2-1 rule. By doing this you maintain the half-block bond throughout the wall (Fig. 1)

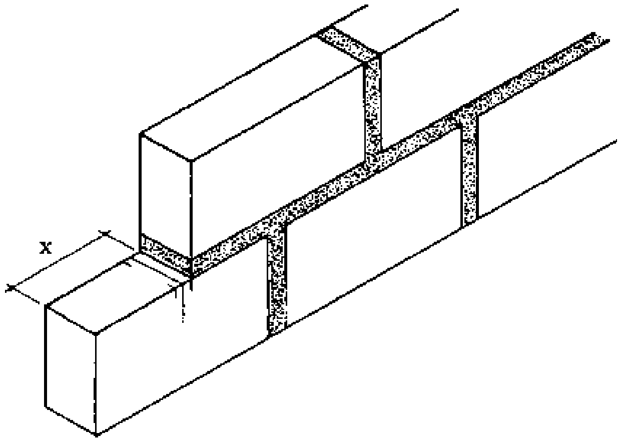

Fig. 1 SECOND COURSE X = HALF BLOCK PLUS HALF JOINT

After you check the height of this block, you must plumb its face. Hold the spirit level vertically along the face of the lower block with one hand, while with the other hand you move the upper block until its face is also in full contact with the spirit level, and the bubble is in the centre of the tube.

Follow the same operation with the second block, laying it above the last cross joint in the lower course. Insert the remaining blocks between them according to the method used for the first course.

The construction of any subsequent course is merely a repetition of the above operations and will result in a wall with racking back at both ends (Fig. 2).

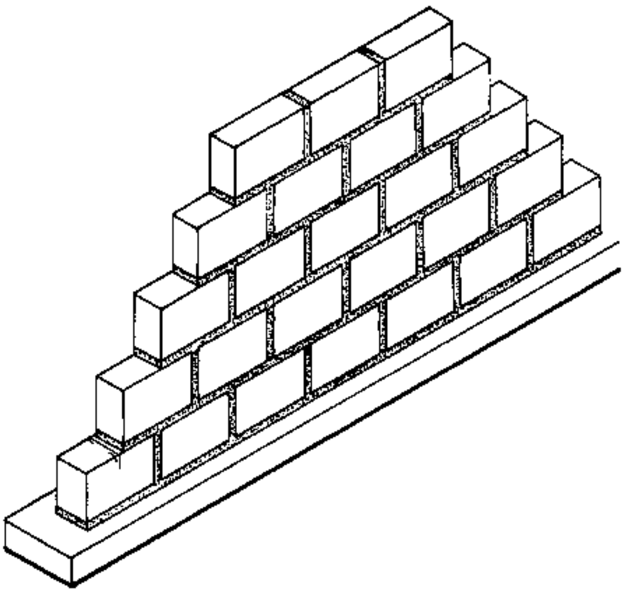

Fig. 2 RACKING BACK

- NOTE: If the Rural Builder has a choice between racking back and toothing, racking back should be the preferred method. This is because the joints used in toothing are difficult to fill properly when completing the wall, which often results in a weak grip all along the joints.

NOTES:

Toothed end

The construction of a wall with a toothed end starts with the same operations used for a wall with a racking back. After you lay the first block of the third course, the next block you lay forms the toothed end. As this block projects past the one below by more than half its own length, it should normally tip over on its projecting end. To prevent this, a temporary support must be provided until the block is overlapped by the first block of the fourth course and the mortar has set hard. This temporary support is preferably a short piece of board cut to the height of the block plus two bed joints. The upper and lower ends of the supporting board may be chamfered slightly to keep it from wedging between the blocks when it is removed (Fig. 1).

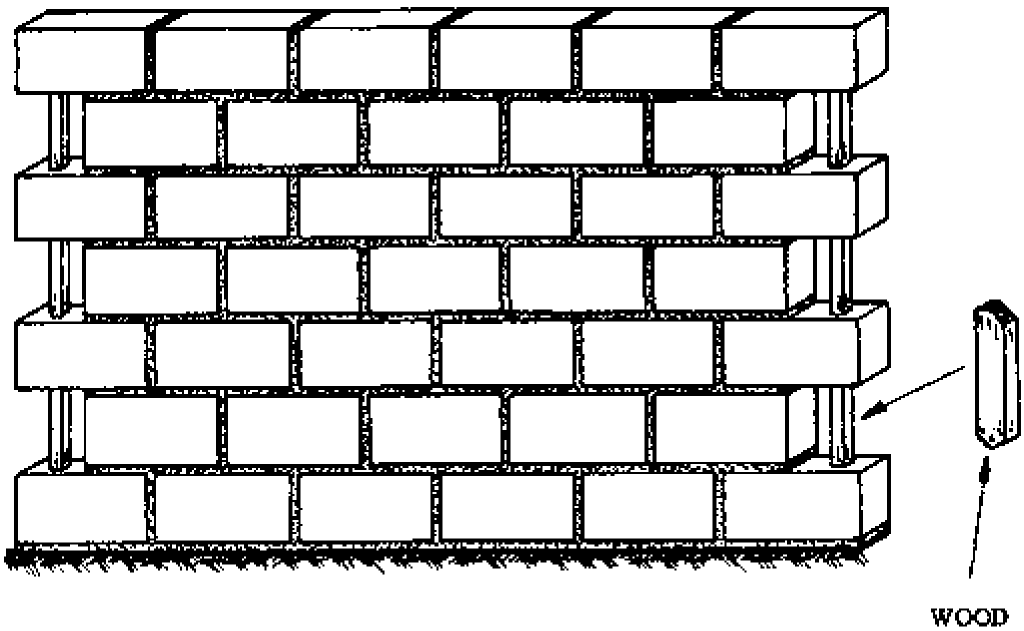

Fig. 1 TOOTHED END

This block must be exactly above the first block of the first course. To ensure this, hold the spirit level against both header faces and make any necessary corrections. It is not necessary to level the top face if the stretcher and header faces have been plumbed.

The construction of further courses is again only a repetition of these operations.

Stopped end

The construction of a wall with a stopped end is very similar to that with a toothed end. The sequence of operations is exactly the same except that instead of the supporting board, half a block is added at the end of the second course before the third course is laid (Fig. 2).

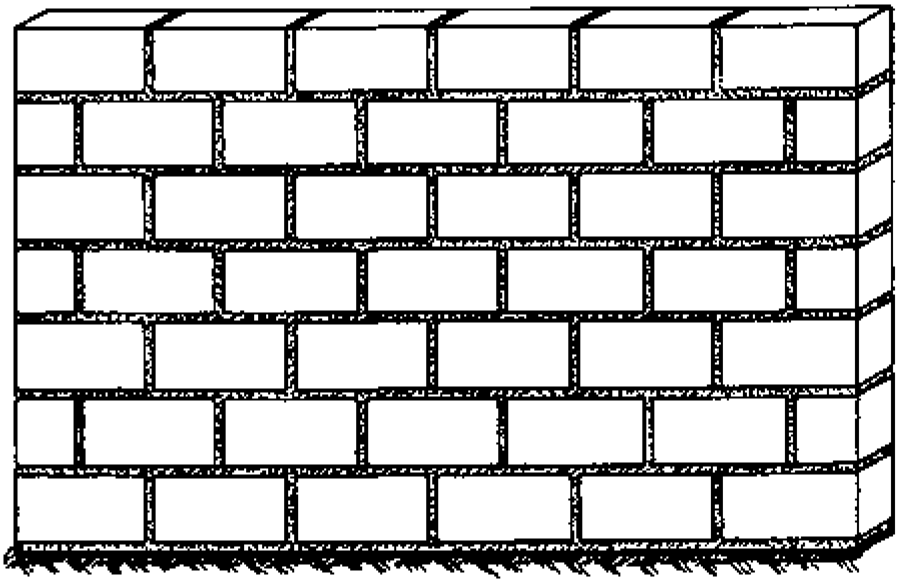

Fig. 2 STOPPED END

This means that there are no gaps left as in the toothed end, so it is called a stopped end.

NOTES:

Marking and cutting blocks

It is usually not possible to construct walls using only full blocks. In most cases 1/4, 1/2, and 3/4 blocks or intermediate sizes are also required. The previous description of the stopped end, for example, has shown the need for 1/2 blocks.

This does not mean that 1/2 blocks are obtained by simply cutting a full block into two identical halves. This is because the cross joint and its thickness must be considered.

Therefore, the 1/4, 1/2, and 3/4 blocks are actually that part of a full block minus half the thickness of the cross joint (Fig. 1).

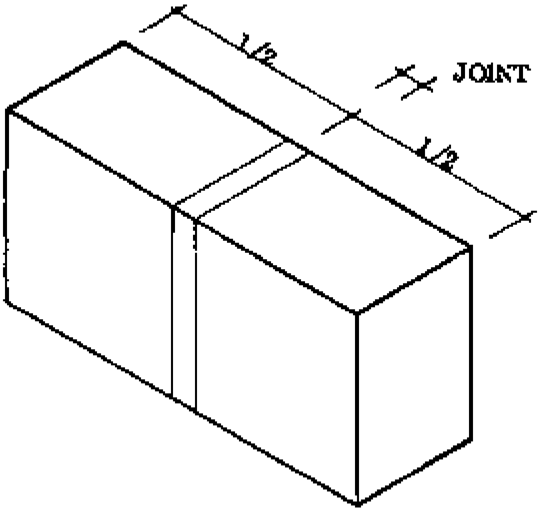

Fig. 1 MARKING THE BLOCK

Before cutting a block, mark the required size around all the faces. To prevent mistakes and to speed up the work, use a block gauge (see Rural Building Reference Book, Tools, page 12). Position the appropriate setting of the gauge against the block, then mark off the measurements on the block face using a pencil or a nail.

Set the marked block on a small heap of sand and then cut it with the block scutch by repeatedly and carefully knocking along the mark, making a groove in the surface. Direct the blows close to each other all around the four faces and continue until the block breaks apart along the groove (Fig. 2).

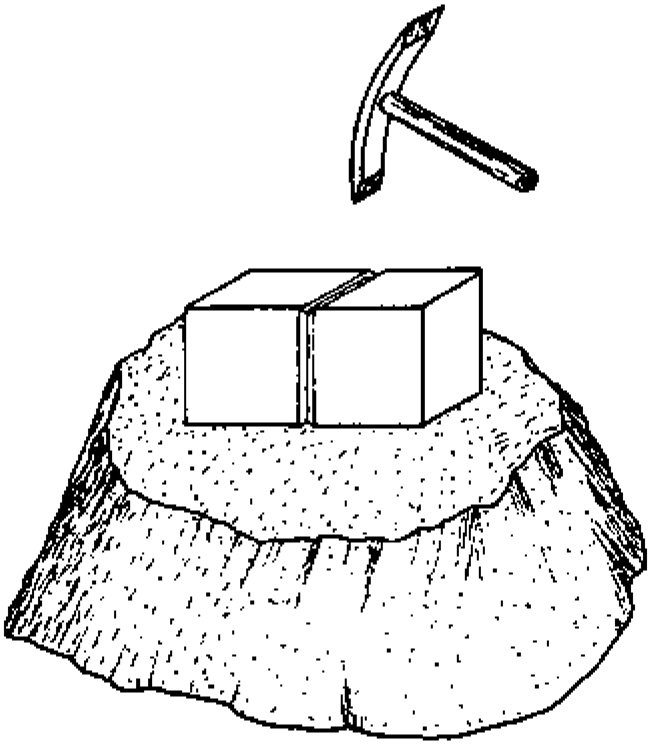

Fig. 2 CUTTING THE BLOCK INTO HALF BLOCKS

Trim the resultant rough header faces, if necessary, with the edge of your trowel blade (for landcrete blocks). When cutting sandcrete blocks, you should use the block scutch for trimming (Fig. 3).

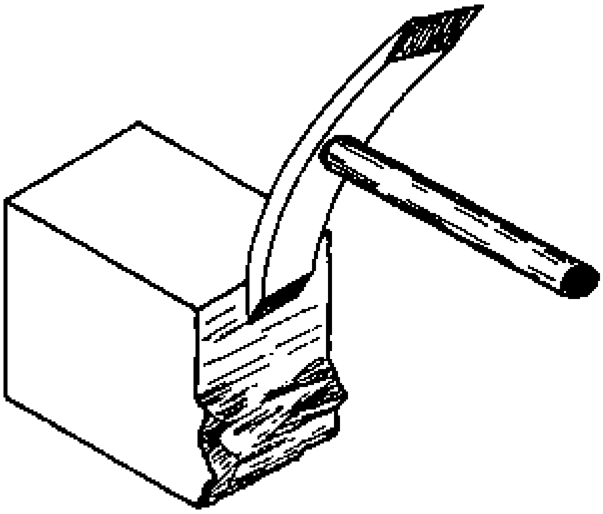

Fig. 3 TRIMMING OF HEADER FACE

- NOTE: Avoid cutting blocks on hard ground: they can easily break into irregular pieces and be wasted.

Never cut blocks on a scaffold for the same reason, also because they might fall and injure someone below.

It is always better to prepare in advance the number of blocks that you think will be needed that day.

Do not use blocks which are cracked; these must be replaced by good blocks or the wall will be weakened.

NOTES:

QUOINS

When external walls are constructed the corners or quoins are built first, to a height of several courses. Usually it is best to build six courses as this will reach to about 1,5 m high, the so-called scaffold height; and in most cases this will be half of the total height of the wall. The walling between the courses is completed later, course by course. The accuracy of the whole wall is determined by the corners, so great care must be taken to build them properly.

At the beginning of training, the positions of the quoins are determined by marking them out on the floor using the mason square.

A quoin is constructed in the following manner:

Blocks are sometimes not correctly shaped, so the first block or angle block must be chosen carefully so that all its faces are square to each other.

As you lay the angle block, stand close to the foundation with your head vertically over the block. You should be able to see that both outer faces of the block are aligned with the mark below (Fig. 1). After this the block has to be accurately levelled and plumbed.

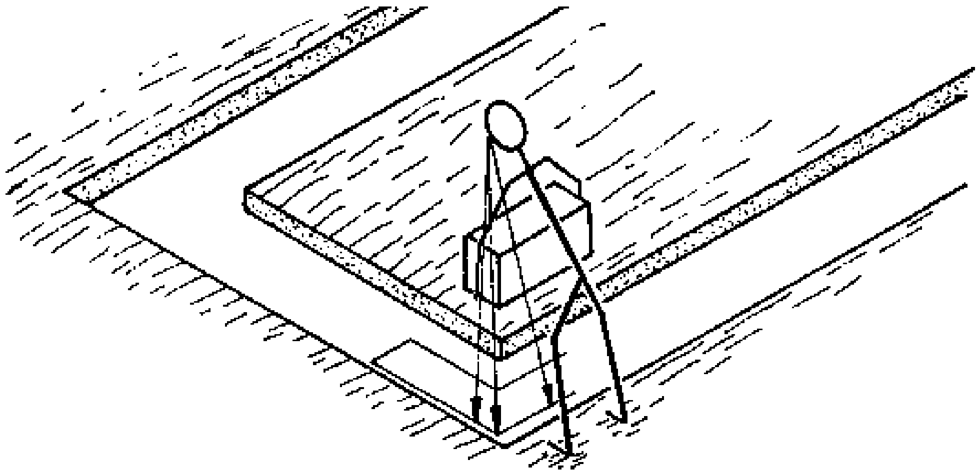

Fig. 1 ALIGN BLOCK WITH THE MARKS

Use the straight edge with gauge marks to ensure that the block is laid at the correct height. Hold the straight edge vertically against the block; the top edge of the block should correspond to the gauge mark (Fig. 2).

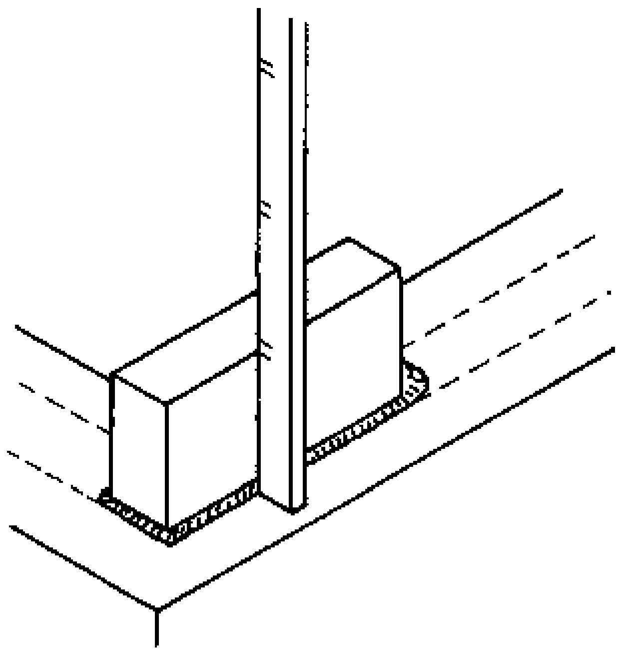

Fig. 2 CHECK CORRECT HEIGHT

Now you have to make certain that the header face and the stretcher face are truly vertical. To do this hold the spirit level against one face about 5 cm from the corner, keeping it in this position while with your other hand you move the block until the bubble in the tube is centered. This operation must be repeated with the other face of the block (Figs. 3 & 4).

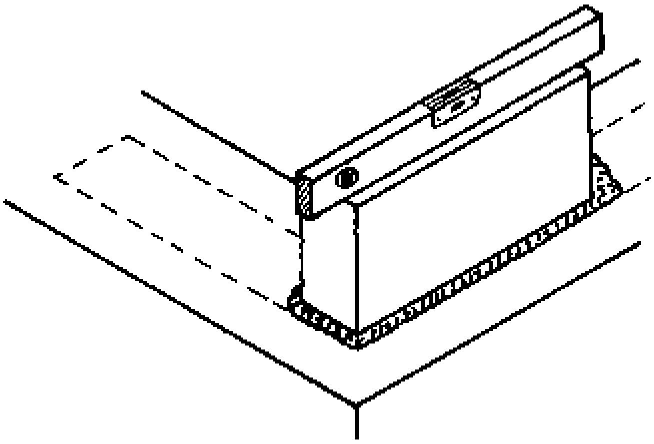

Fig. 3 LEVEL THE BLOCK

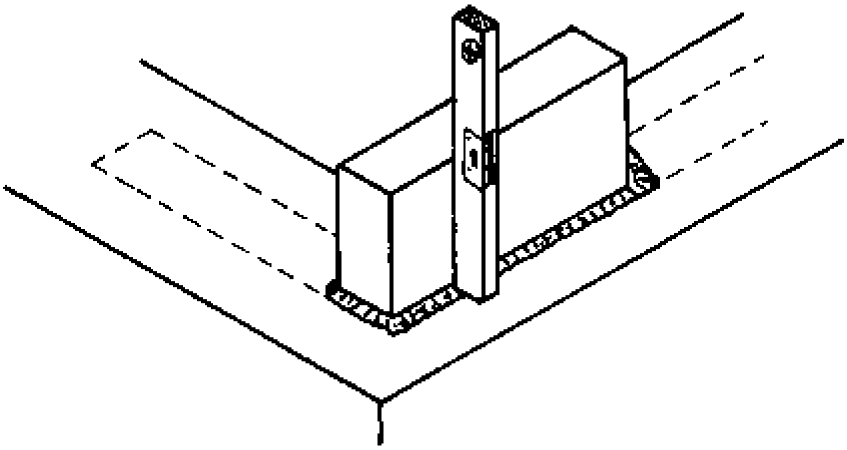

Fig. 4 PLUMB THE BLOCK

NOTES:

Now lay several blocks in each direction according to the method described before. On the quoin stretcher side three more blocks should be laid; followed by four on the header side of the quoin. This will be a sufficient base for building up a height of six courses with either a toothed end or racking back (Fig. 1).

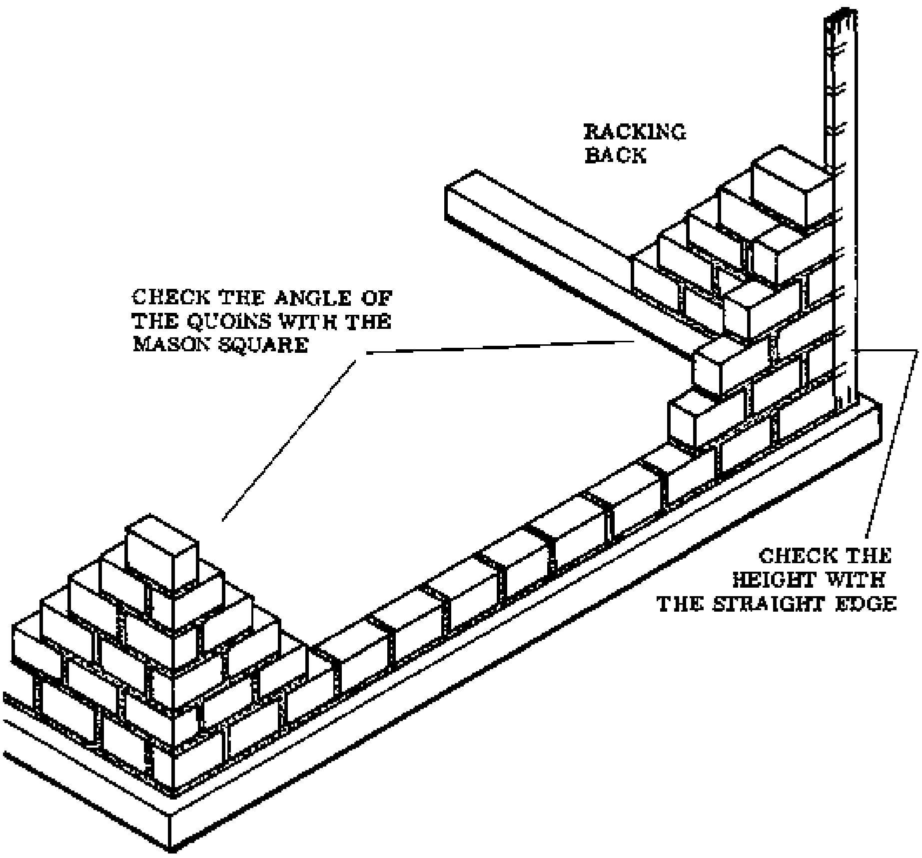

Fig. 1

Use the mason square to make sure that the quoin has an angle of 90 degrees. Hold it against the quoin so that both of the blades fully touch the faces of the blocks. Repeat this operation after turning the square around, so that the direction of the blades is reversed.

Second course

Following the 1-2-1 rule, the first block of the second course will not be the angle block; but the one covering the cross joint between the quoin stretcher and the adjoining stretcher. If the angle block were laid first it could get pushed out of position when the other blocks are laid. The correct method fixes the angle block in position by the cross joint between it and the first block. A further reason for this procedure is that the cross joint between the quoin headers and the adjoining stretchers has a different thickness than the other cross joints. This problem will be explained later when we come to bonding problems.

To complete the second course use the same method as described for the construction of the first course.

- NOTE: The arrangement in any course is repeated in the courses two above or two below it. Therefore only two alternating block arrangements are used.

Walling between quoins

When both corners of a wall have been built up to a height of six courses, it is necessary to fill in the blockwork between them. This is done with the aid of the mason line and either nails, pins, or line bobbins.

Fixing the mason line

If nails or pins are used, insert one of them in the bed joint at one corner so that the line will be level with the upper edge of the course (see Rural Building Reference Book, Tools, page 6). Fix the mason line to the nail or pin without using a knot, as shown in Fig. 2. This is so that later it can be easily removed.

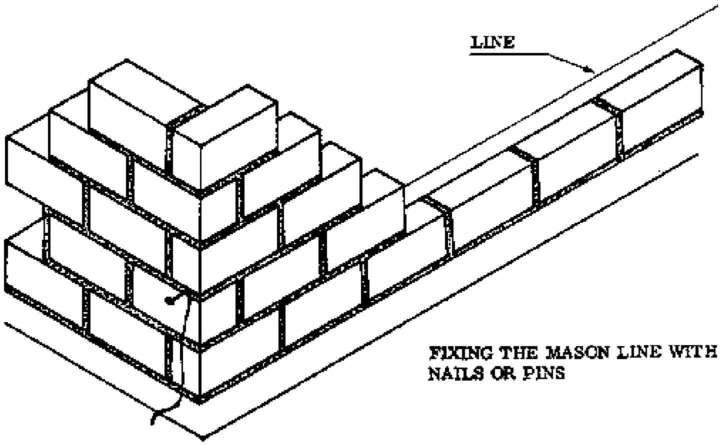

Fig. 2

Stretch the line taut to prevent any sagging, and push the second nail or pin into the corresponding bed joint in the opposite quoin. The line should now be level with the top of the course to be built; and about 2 mm or the thickness of a trowel blade away from the blockwork. Put a wedge of paper between the wall and the line to keep the distance of 2 mm. The line should be horizontal.

If you use line bobbins instead of pins, take one with the line fastened around the screws and engaged in the saw cut; and position it with the notch against the corner of the quoin so that the line is level with the top edge of the course to be built. At the opposite quoin insert the line in the saw-cut of the second bobbin and set it at the correct height against the corner. Stretch the line taut and secure it by winding around the screws (Fig. 1).

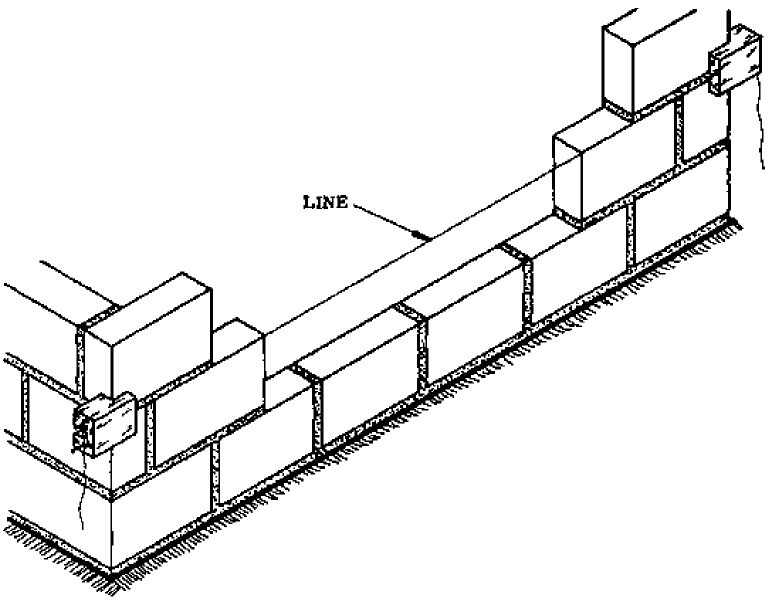

Fig. 1 LINE BOBBINS

The tight mason line holds the bobbins against the corners, keeping them in position. Once the line has been fixed in this manner no further adjustment is needed, unless the line starts to sag and needs tightening.

After one course is completed, simply slide the bobbins up the corners to the level of the next course.

Use of the tingle plate

If the line is stretched over a longer distance, it will tend to sag and will no longer provide a straight guide. In the case of a long wall where the distance between the bobbins exceeds 6 m, it becomes necessary to use one or more tingle plates (Fig. 2). This is done to keep the line from sagging. The tingle plate must be set on a so-called tingle block. Lay this block plumb, in position and at the correct height in the course to be built. This block keeps the tingle plate at the required height to support the mason line. Place the plate flat on the block, and weight it down with a half-block. The taut line is passed under the outer nibs and over the centre nib (Fig. 2).

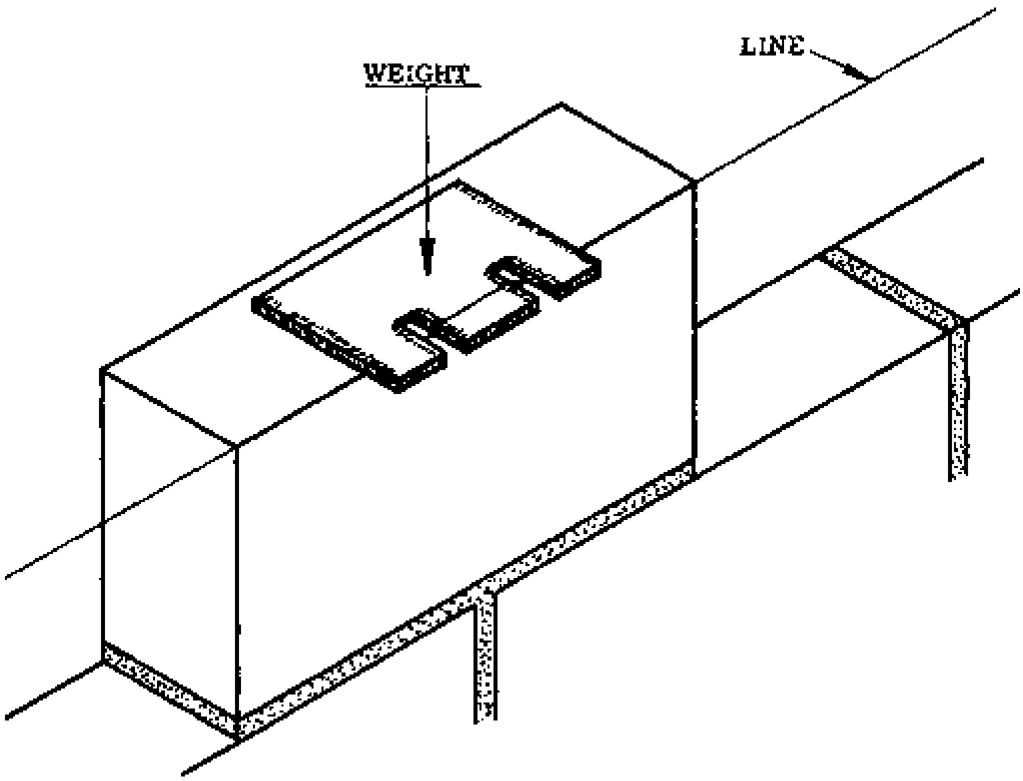

Fig. 2 TINGLE PLATE

Completing the course

Now lay the blocks to complete the course. Take care that the outer top face edge of each block is level with the line.

At the same time be sure to keep the lower stretcher face edge in line with the edge of the course below. Avoid the tendency to lay the blocks too close to the line; the 2 mm distance must be maintained and checked from time to time by sliding the trowel blade between the line and block.

If the blocks are laid correctly, plumbing and levelling are not necessary. It is advisable however to check the face of the wall for a possible overhang, using the straight edge.

After you have filled the cross joints, carefully rake out all the joints of the freshly laid courses to provide an additional grip for the plaster.

BONDING PROBLEMS

Problems arise when we use different types of blocks in the same wall. Usually in Rural Building we use sandcrete blocks for the lower courses of a wall to avoid problems with dampness, and landcrete blocks for the higher courses. Unfortunately the dimensions of sandcrete blocks and landcrete blocks do not match up well to each other. This means that it is not as easy to maintain a half-block bond as it is in a wall made up of only one kind of block.

For example, a sandcrete block has dimensions of 46 × 23 × 15 cm. A sandcrete half-block has the dimensions 22 × 23 × 15 cm. Even when the sandcrete blocks are cut in half they still will not match up exactly to the landcrete blocks (see the table below).

	Full block	**Half block**
Sandcrete	46 × 23 × 15	22 × 23 × 15
Landcrete	29 × 22 × 14	13,5 × 22 × 14

The dimensions of the 1/4 and 1/3 blocks also do not correspond, so in order to maintain the half-block bond between the sandcrete and landcrete courses we would have to make quite an adjustment.

Practically this means that although it would be better, we cannot maintain exactly a half-block bond between the sandcrete and landcrete. They must be considered as separate parts of the wall, properly bonded in themselves but not necessarily showing a half-block bond between them.

CORNER BONDS

Corner bond for footings

The materials used for footings are sandcrete blocks which must be laid flatwise, giving a wall thickness of 23 cm. Since this measurement exceeds the length of a half-block by 1 cm, the first cross joints following the quoin stretchers must be 3 cm wide instead of the normal 2 cm. All the other joints are still 2 cm thick. By doing this the half-block bond is maintained (Fig. 1).

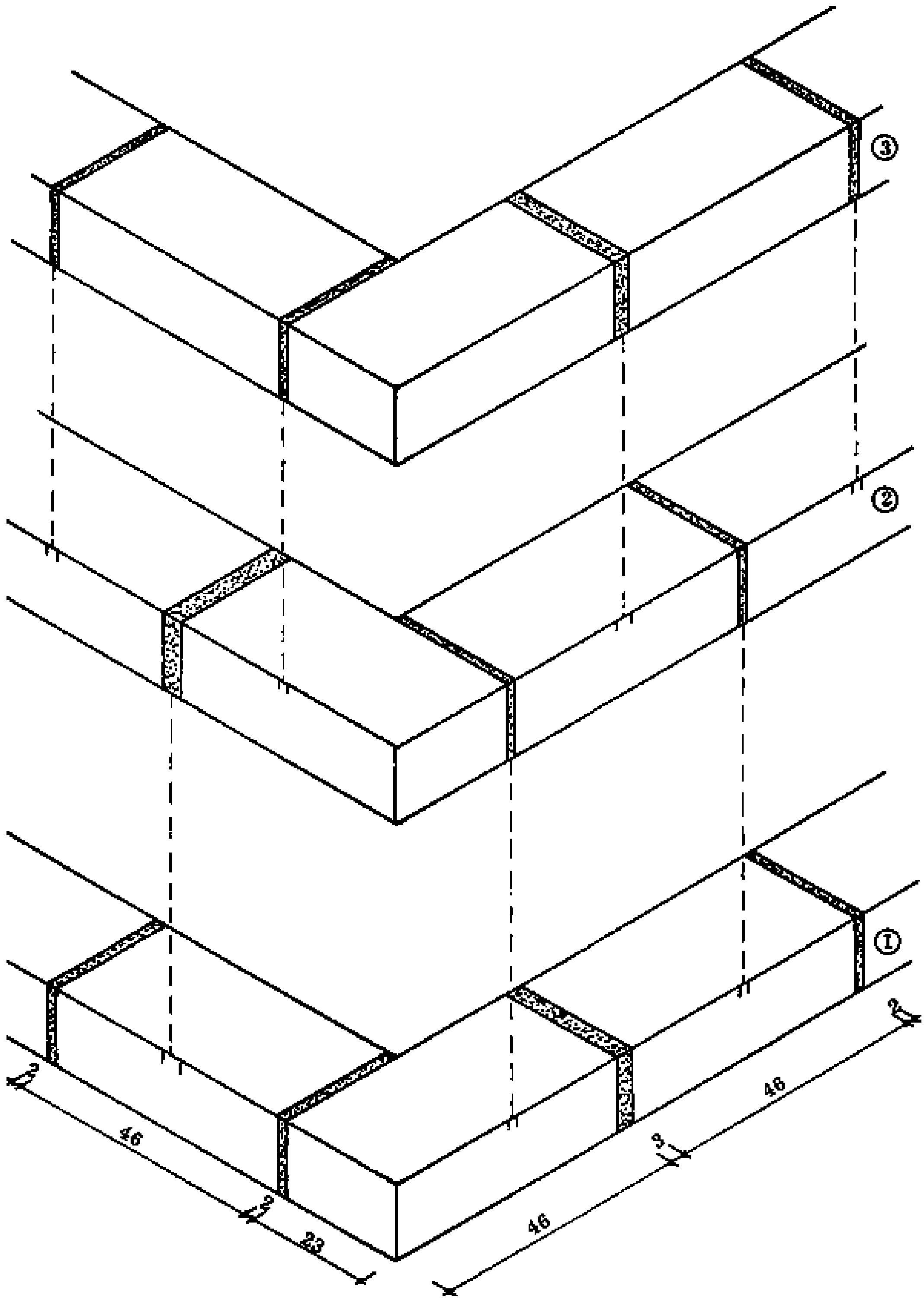

Fig. 1

There are of course two other ways to maintain the half-block bond:

- All the cross joints directly following the quoin header could be reduced to a thickness of only 1 cm. The effect would be the same but these joints would be difficult to fill properly, which could result in a weak quoin.

- All stretchers following the quoin headers could be cut to a length of 45 cm. This takes time and may damage the blocks.

In general, it is best not to use these last two methods.

Corner bond for a rising sandcrete wall

So-called wet rooms such as kitchens, showers and toilets must be built with sandcrete blocks. This is to avoid any damage to the walls caused by moisture.

If landcrete blocks are exposed to moisture for a long time the blocks will start to expand. This pushes the plaster off the walls and makes them weaker and weaker until finally they collapse under their own weight.

Rising walls in Rural Building are generally built by laying the blocks edgewise. When sandcrete blocks are used the wall has a thickness of 15 cm.

In order to avoid making too many cross joints within the quoin area, each quoin header as well as each quoin stretcher is followed by a full block.

To maintain the required half-block bond, a 7 cm lack of overlap has to be made up. This is done by inserting a 5 cm block between the first two stretchers that follow the quoin headers (5 cm plus 2 cm joint equals 7 cm). Almost every building project uses thin blocks for copings or rain gutters etc., and these specially made blocks can be simply cut in half and used to fill the gaps (Fig. 1).

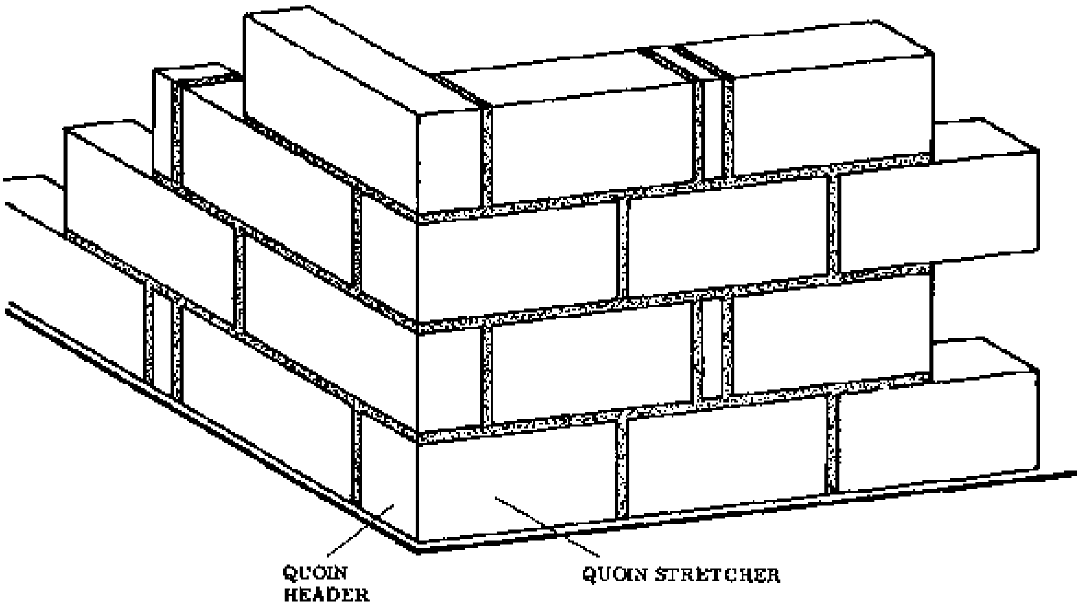

Fig. 1

NOTES:

Corner bond for rising landcrete wall

As far as bonding is concerned, the footings, the plinth course and the rising landcrete wall are all regarded separately. They are properly bonded in themselves but don't necessarily show a half-block bond, especially between the plinth course and the landcrete wall.

As Fig. 1 illustrates, a half-block bond between footings and plinth course (both sandcrete) is possible despite the 4 cm setting back (c) and should be maintained.

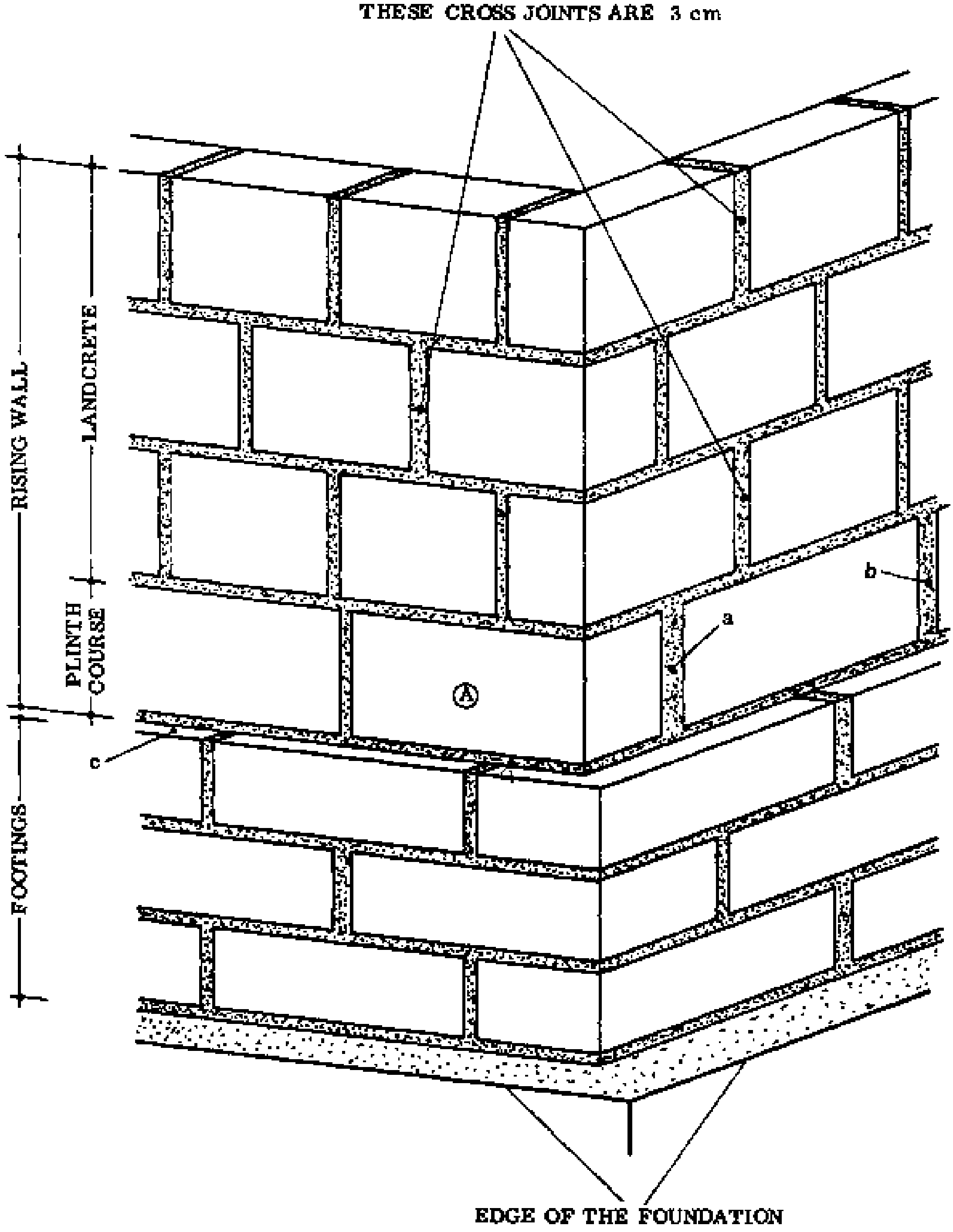

Fig. 1

- PLINTH COURSE: Since the rising wall is erected exactly in the middle of the footings, the plinth course has to be set back 4 cm from both faces: 23 cm (thick ness of footings) minus 15 cm (thickness of plinth course) divided by 2 equals 4 cm (at both sides).

The angle block (A) has to be shortened by 3 cm because of the setting back, thus we automatically make the correct half-block bond on the quoin stretcher side. The first two cross joints (a & b) following the quoin header must be widened to 4 cm each to overcome a lack of 4 cm in overlap. By doing this we distribute the lack of 4 cm over two joints equally.

- RISING LANDCRETE WALL: As already stated, the rising landcrete wall is regarded separately from the plinth course. This is because the dimensions of the landcrete and sandcrete blocks prevent the construction of a half-block bond between them.

However, one important rule must be observed: No matter what part of the construction or what material it consists of, each quoin header must be overlapped by a quoin stretcher; each quoin stretcher is automatically followed by a quoin header (Fig. 1).

To maintain the half-block bond within the landcrete wall, all the cross joints directly following the quoin stretchers must be widened to 3 cm. All other joints remain the same.

NOTES:

T-JUNCTION BONDS

The term T-junction is given to connections between walls which form a T shape, although it is not essential that the angles be right angles. This situation occurs most often where outside walls are met by inside walls.

T-junction bond for footings

Like quoins, the T-junctions are built first or at the same time as the quoins, and the walling between them is completed later.

The first block to be laid is the first block (A) of the inside wall: it will be seen as a header in the face of the outside wall (Figs. 1 & 2). This followed by a 1/4 block (B) at one side of it in the direction of the outside wall, and by a full block (C) on the other side (Fig. 2). This is followed by laying full blocks in all three directions.

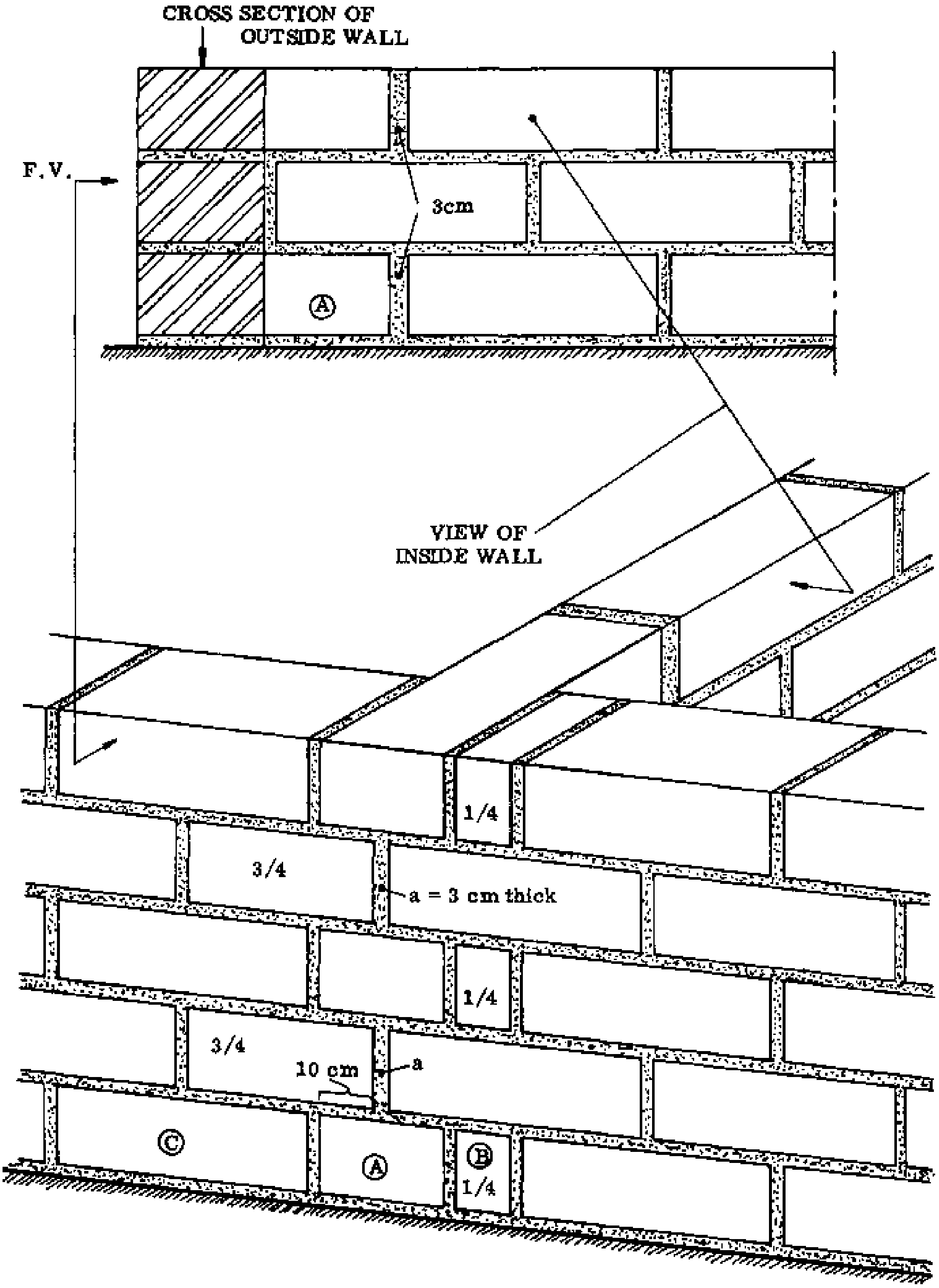

Fig. 1 & 2 COMBINED SECTION OF OUTSIDE WALL AND VIEW OF INSIDE WALL

The second course, and all the alternate courses, go through in the direction of the outside wall, that is, they do not share a block with the inside wall. Thus the inside wall is bonded to the outside wall only at alternating courses: at the 1st, 3rd, 5th etc. courses (Figs. 1 & 2).

The second course starts with a 3/4 block overlapping the header below by 10 cm but from the side opposite from the 1/4 block below. This is followed by full blocks in all three directions (Figs. 1 & 2).

The cross joints between the headers of the inside wall (a) are 3 cm thick and must be exactly in line with the centre of the headers (Fig. 1). The cross joints directly following the blocks which are bonded to the outside wall are also 3 cm thick (Fig. 2). All the other joints are 2 cm thick.

- NOTE: All courses with odd numbers (1st, 3rd, 5th etc.) share one block with the inside wall; these blocks are seen as headers in the face of the outside wall, each one next to a 1/4 block.

All courses with an even number (2nd, 4th, 6th, etc.) go through in the direction of the outside wall and contain a 3/4 block at the opposite side of the 1/4 block below and above.

NOTES:

The illustrations on the opposite page show three other possible constructions for T-junctions in footings, all of which maintain the half-block bond (Figs. 1, 2, & 3).

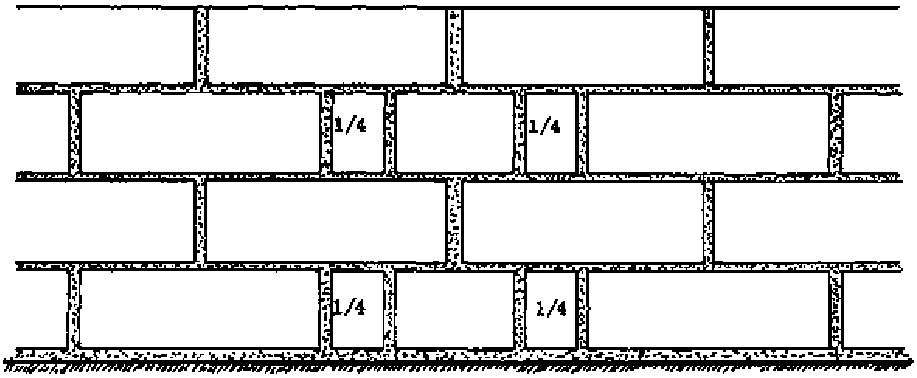

Fig. 1 2nd CONSTRUCTION

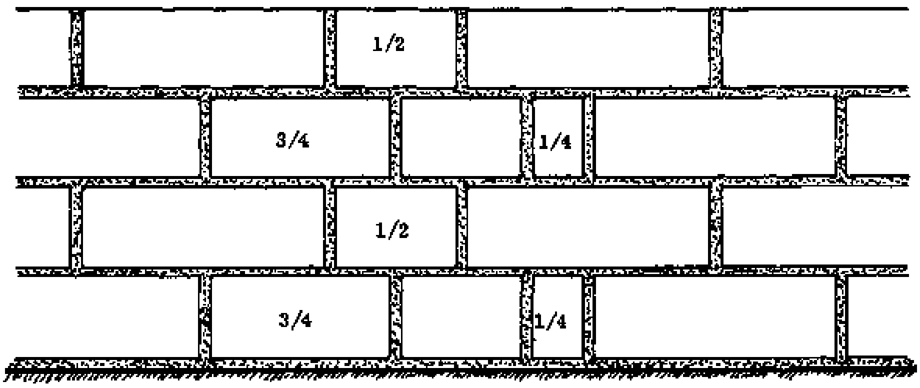

Fig. 2 3rd CONSTRUCTION

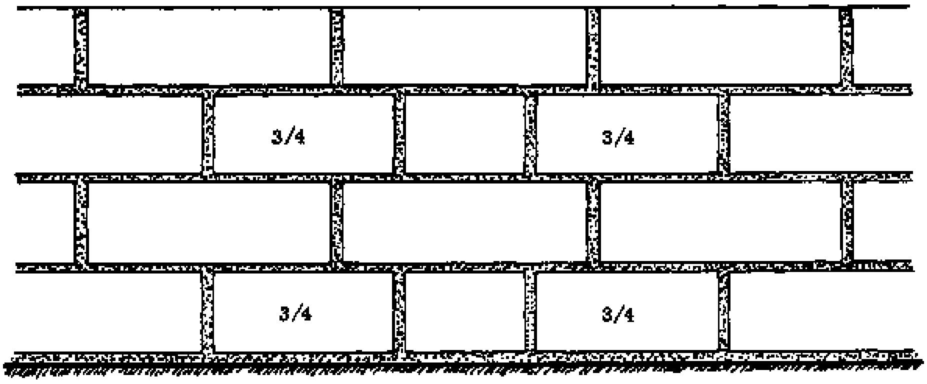

Fig. 3 4th CONSTRUCTION

Which method is used depends on factors such as the distance between the junction and the next quoin, or the next junction.

One way to find out the best choice is to lay out the first course of blocks without mortar, and try different arrangements. In this way the builder can decide what will be the best final arrangement.

If two or more constructions are possible the Rural Builder should chose the most efficient method. This is the method that wastes the least time and materials.

Specifically, the more blocks that have to be cut the more time will be needed; and if for example only 3/4 blocks are needed, the remaining 1/4 blocks are wasted unless there is a need for them somewhere else.

By comparing the four possible constructions (Figs. 1 & 2 on page 37, and Figs. 1, 2 & 3 at left) we see that the first three can be carried out without any waste of blocks while in the last case (Fig. 3) all the 1/4 blocks are left-over.

As far as efficient work is concerned, we see that for the first method (page 37) only one cut needs to be made for two courses as both parts of the block are used. The alternatives shown in Figs. 1, 2 and 3 need two cuts for two courses.

By considering carefully the advantages and disadvantages of the four, we see that the first construction is the best, the 2nd and 3rd constructions are less good and the 4th construction is the worst. Therefore the first type should be used whenever possible.

NOTES:

T-junction bond for rising sandcrete walls

Since the footings are normally 3 courses high, the third course of the footings contains the block which bonds the inside wall. Thus the first course of the rising sandcrete wall must go through in the direction of the outside wall to cover the header of the footings (see previous pages).

The first block of the rising wall is placed so that it extends past the header below by 12 cm on one side (Fig. 2, block A). Don't forget to set this block back from the face of the footings by 4 cm. This block is followed by full blocks on either side (Fig. 2, blocks B). The inside wall starts with a 1/4 block (Fig. 1, block C), this too is followed by full blocks.

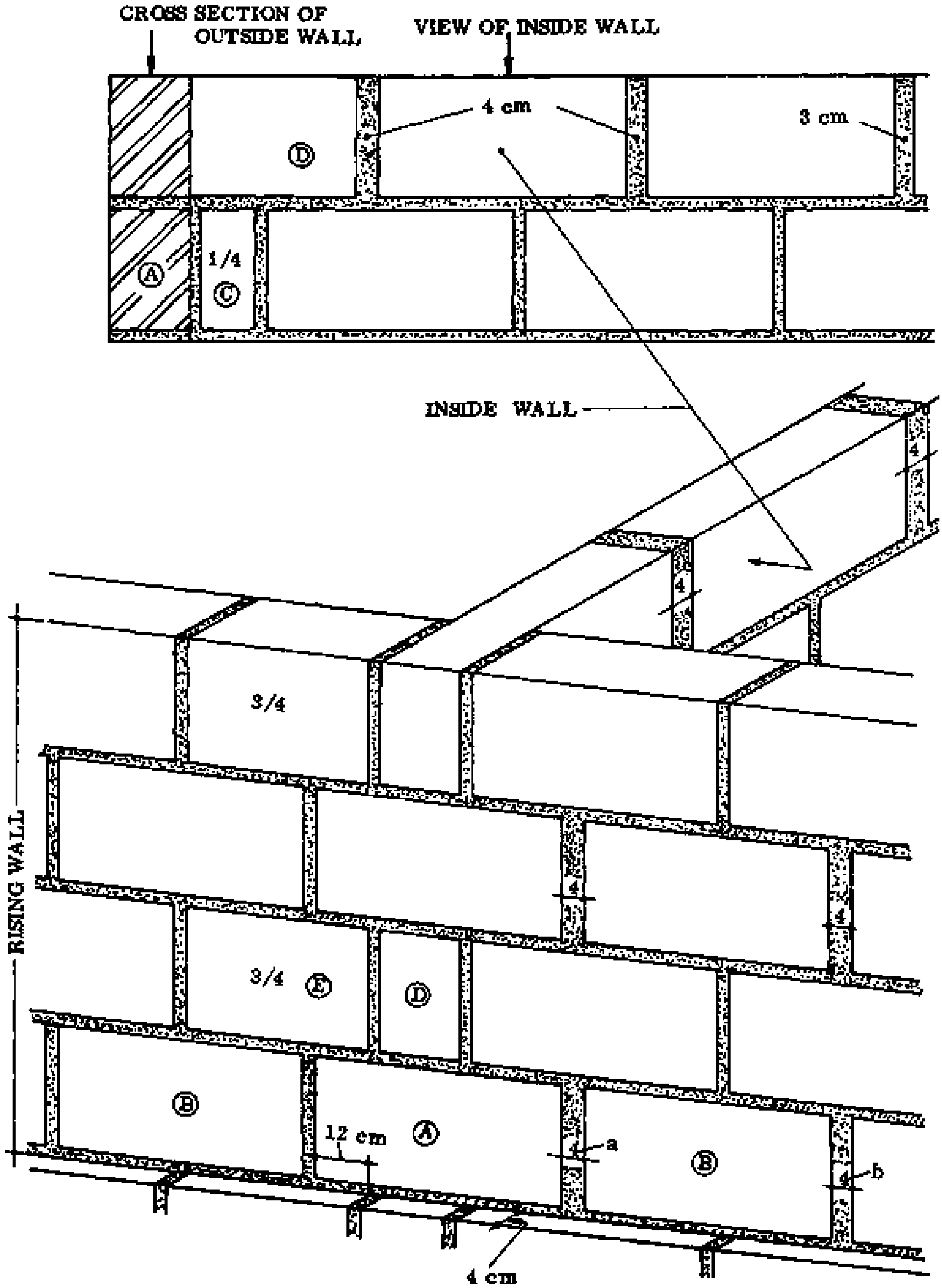

Fig. 1 & 2

The second course of the T-junction begins with the full block of the inside wall that is bonded into the outside wall (Figs. 1 & 2, block D). This is followed by a 3/4 block (Fig. 2, block E) on the same side of the header where the stretcher (block A) below projects by 12 cm. Continue with full blocks in all three directions.

The odd-numbered courses of the outside wall contain widened cross joints to catch up with the half-block bond. The first two cross joints opposite the 12 cm projection (Fig. 2, a & b) are 4 cm thick, followed by one more joint which is 3 cm thick (not shown). In this way the half-block bond is maintained.

The same must be done with the first three cross joints following the bonded block of the inside wall (Fig. 1).

NOTES:

T-junction bond for rising landcrete walls

- PLINTH COURSE: Except that the blocks are laid edgewise rather than flat, the plinth course is simply a repetition of the footing course two courses below (Fig. 1, blocks A & B).

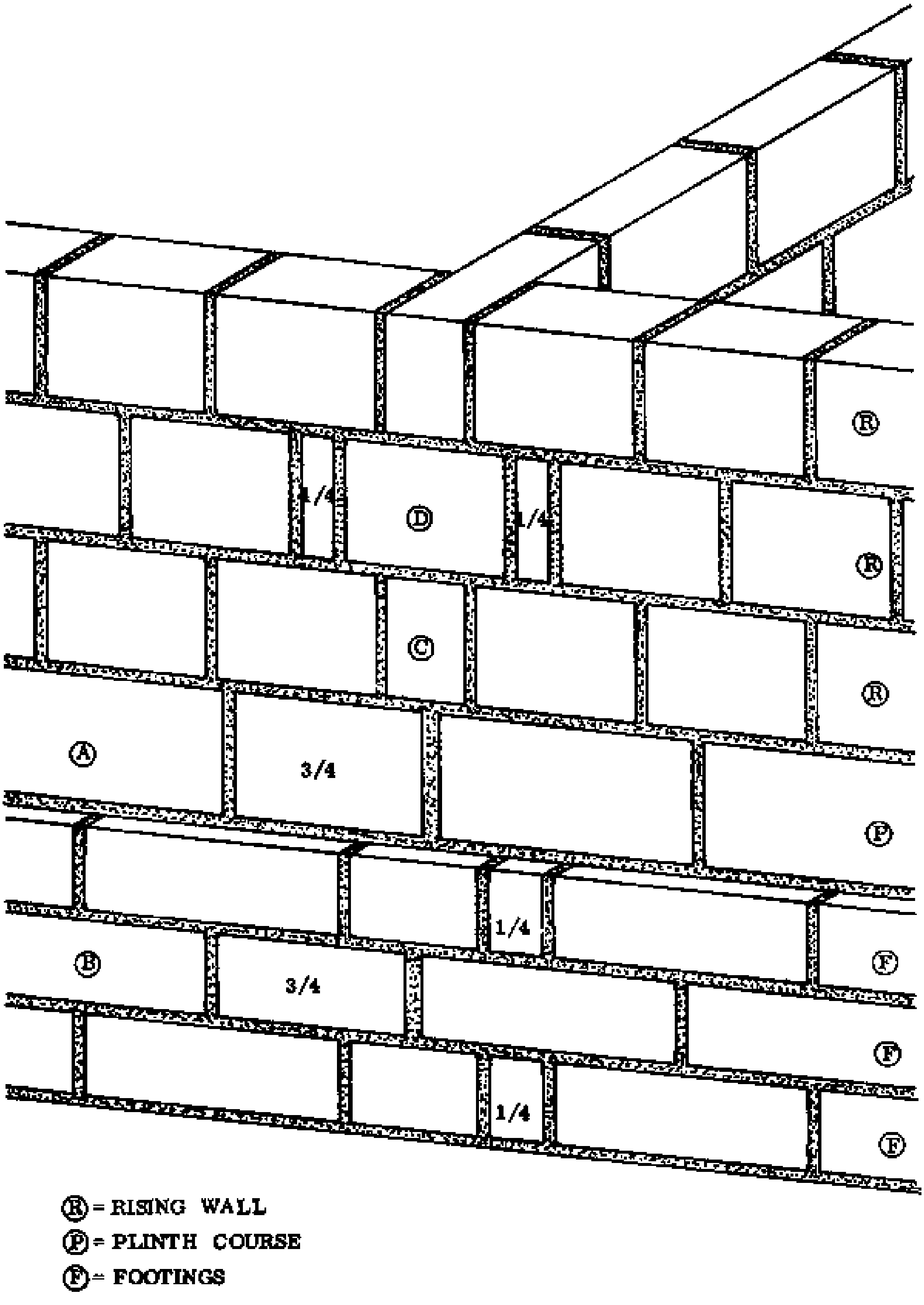

Fig. 1

The only difference is that the first two cross joints in the inside wall are widened to 4 cm each, in order to maintain the half-block bond in relation to the footings.

Do not forget to set the plinth course back from the face of the footings by 4 cm.

- RISING LANDCRETE WALL: Since the landcrete wall is 1 cm thinner than the plinth course, it is essential to continue the “good” face of the plinth by setting the landcrete blocks flush with the outside face of the plinth. The Rural Builder should choose one face of the inside wall to be the “good” face; where the surface of the plinth course is flush to that of the rising wall. This is the face from which the plumbing and levelling are done; the Rural Builder should always work from this face. On outside walls the “good” face is normally the outside face.

The first block of the landcrete wall is the one which is shared by the inside and outside walls and covers two cross joints (Fig. 1, block C). It is followed in all three directions by full blocks.

The second course of the rising landcrete wall begins with a full block centred exactly over the header below, with 1/4 blocks on either side (block D). All of the other courses in the rising wall are repetitions of these two courses.

NOTES:

CROSS JUNCTION BONDS

A cross junction, also called an intersection, consists of two continuous walls which intersect, or cross each other.

The following are only a few examples out of many methods for bonding at a cross junction. In actual practice the dimensions of the building will not always permit the use of these particular bonds. In such cases some adjustments must be made.

The essential requirements for a cross junction always remain the same:

- avoid making continuous cross joints; and
- try to use a minimum number of cut blocks.

Cross junction bond for footings

The first course consists entirely of full blocks (Fig. 1). The through-going block (A) projects equally from both sides of the crossing wall. This block has cross joints of 2, 5 cm on each end, but all the other joints are still 2 cm thick (Fig. 1).

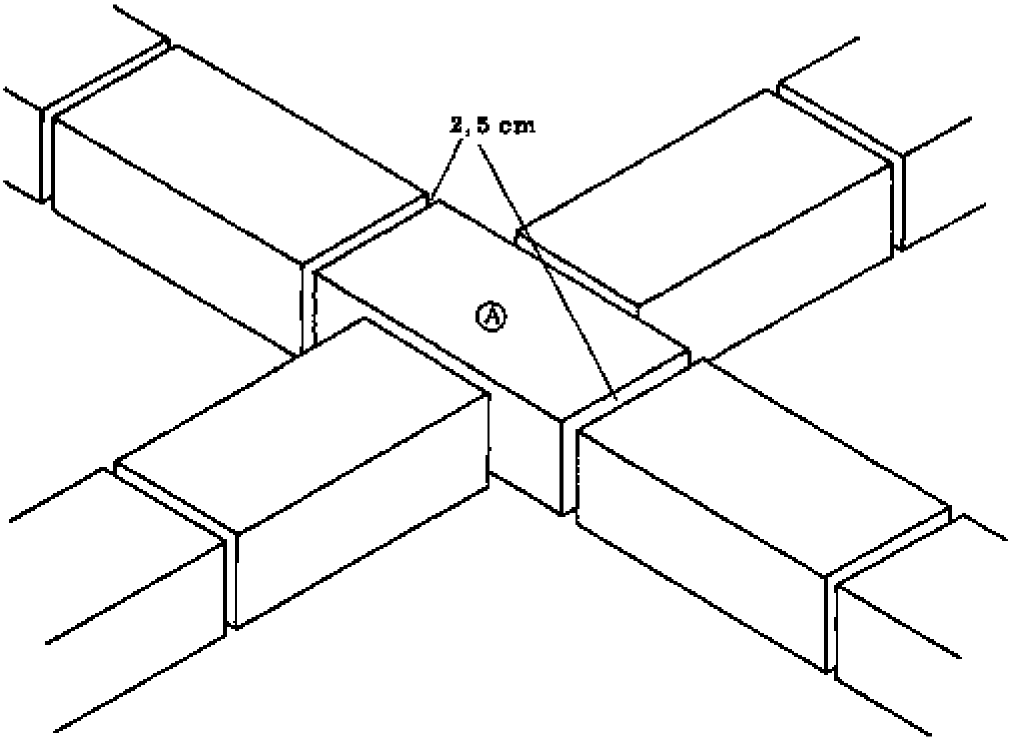

Fig. 1

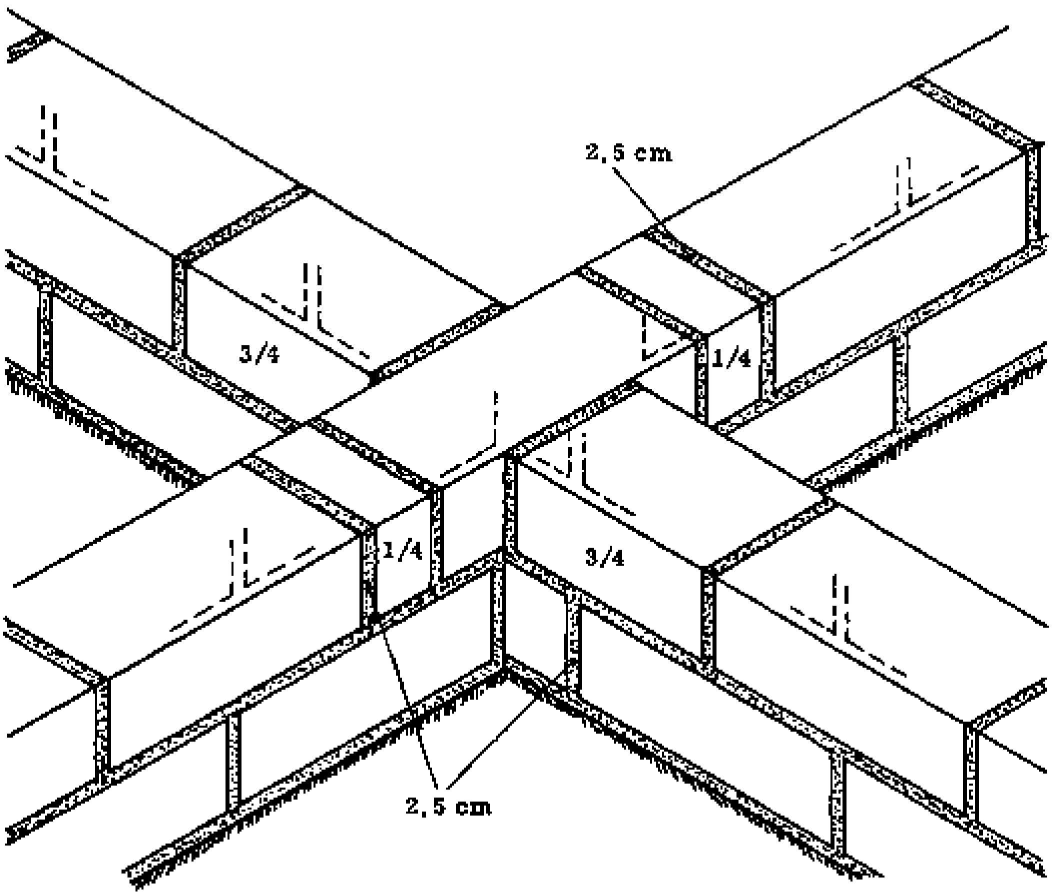

Fig. 2

The second course starts with a full block centred over the through-going block below. This block is followed by 1/4 blocks on either end. The 1/4 blocks each have one cross joint which is 2, 5 cm thick. All other joints are still 2 cm thick.

The second course of the crossing wall continues with 3/4 blocks on both sides. This is followed by full blocks in all four directions.

NOTES:

The second possible construction is where the crossing walls enclose a cross joint (Fig. 1, a). In this case two 3/4 blocks are used in the first course while the remaining 1/4 blocks are kept aside for the second course (Fig. 1).

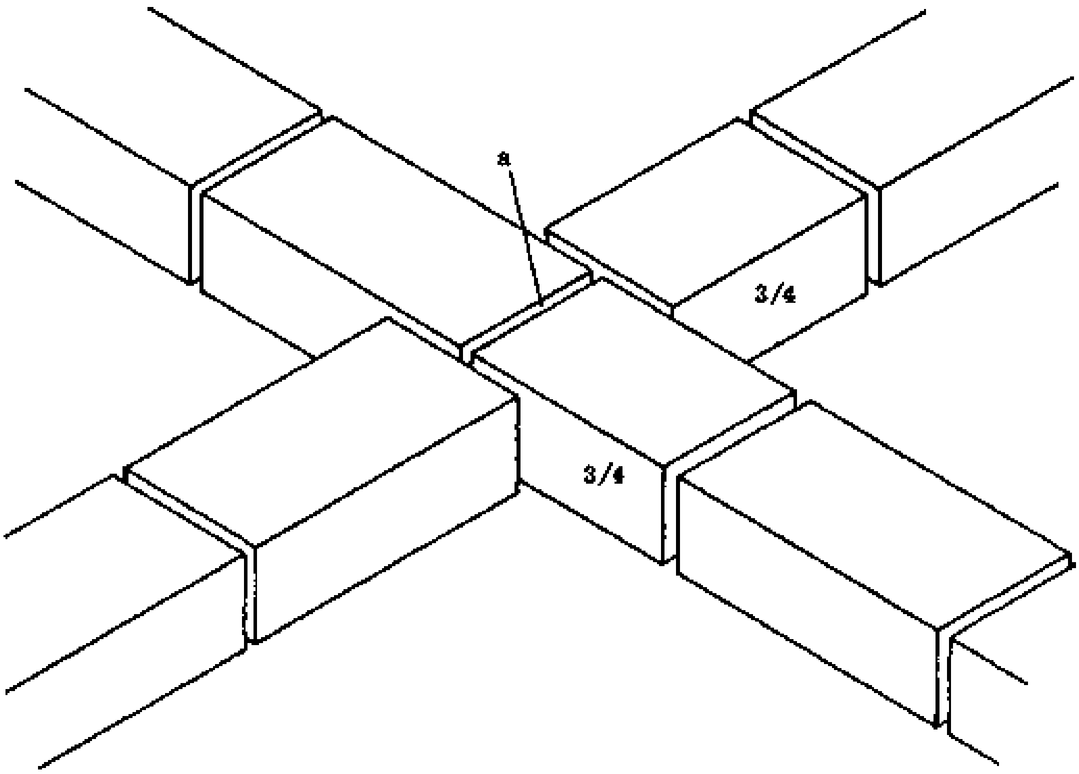

Fig. 1

The two 3/4 blocks of the first course are arranged so that they are at right angles to each other. One of the 3/4 blocks always starts from the middle of the crossing wall while the other is placed on either the right or left side of it. This is followed in all four directions by full blocks (Fig. 1).

The second course begins with a full block crossing the through-going wall below and overlapping equally at both sides. This block covers three cross joints at once instead of two as in the last method. The first block is followed by the 1/4 blocks placed on opposite sides from the 3/4 blocks below. The second course is continued with full blocks in all four directions (Fig. 2).

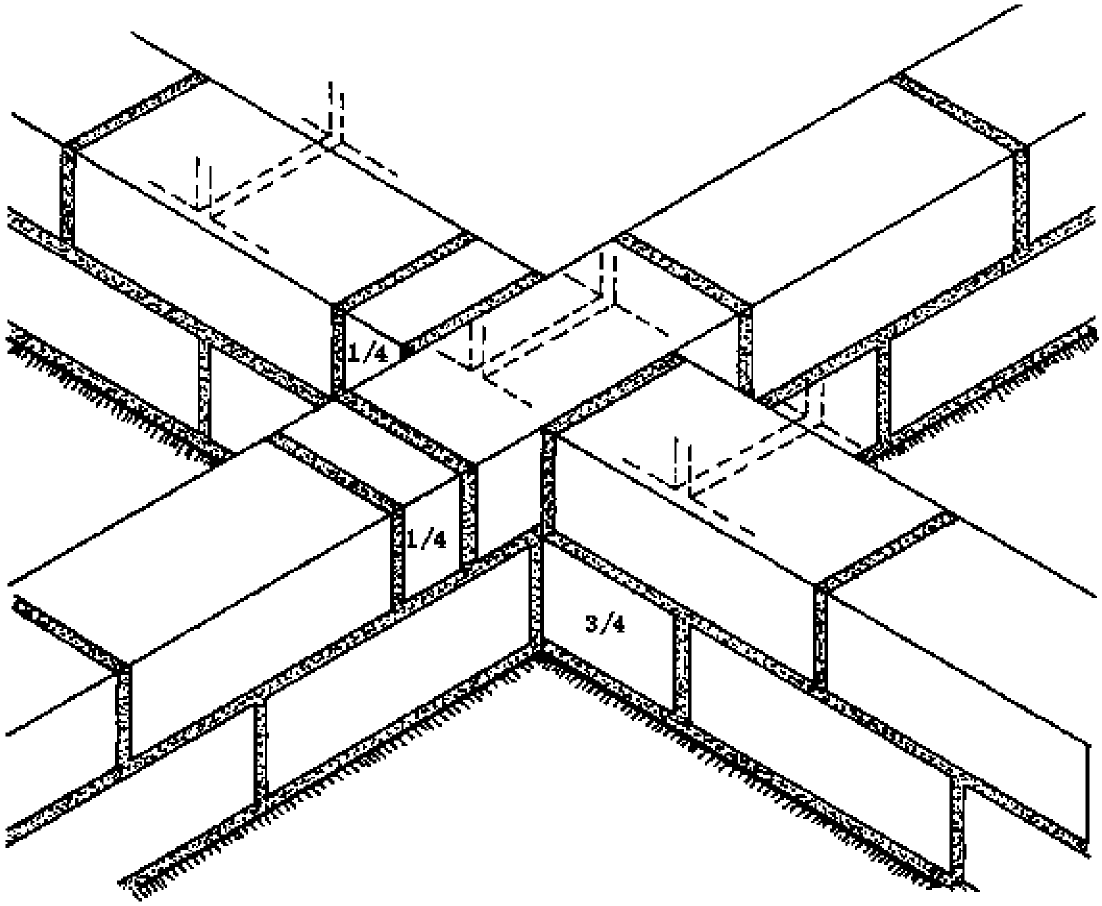

Fig. 2

Each 1/4 block must have one cross joint of 2,5 cm; all other joints remain the same, 2 cm thick.

Try to figure out more possible ways to do a cross junction bond, and discuss the results with your fellow trainees, your instructors, and your foreman on the building site.

NOTES:

Cross junction bond for rising sandcrete walls

The smaller wall thickness in relation to the block length makes it necessary that all cross junction bonds for rising sandcrete walls contain a block that is 5 cm thick (compare with corner bonds for rising sandcrete walls, page 34).

The opposite illustrations show the most economical method for constructing a cross junction. Apart from the one 1/2 block and one 5 cm block, both the first and second courses contain only full blocks.

Fig. 1 shows the first course. The through wall consists of only full blocks, while the crossed wall starts on one side with a 1/2 block combined with a 5 cm block. This is continued in all four directions with full blocks. The through-going block (A) must extend past the crossed wall by 24 cm, which is the length of a 1/2 block plus the joint.

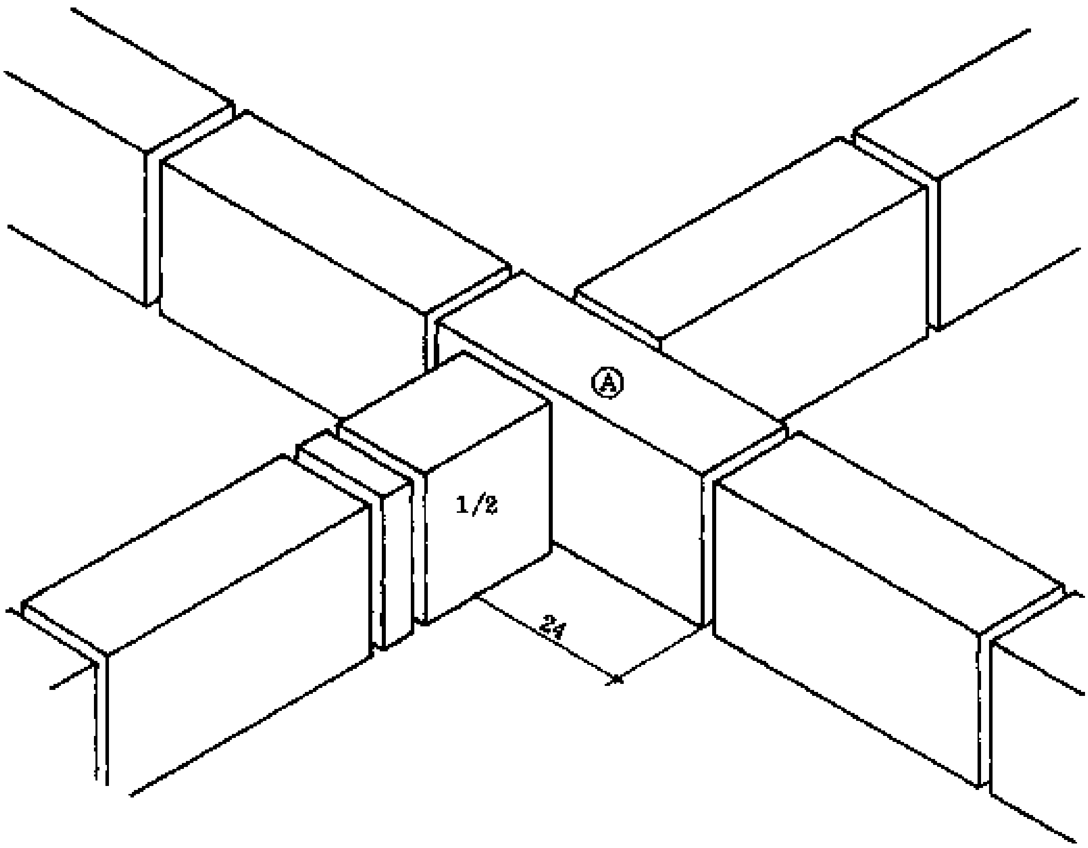

Fig. 1

In the second course, the wall which was crossed in the course below now goes through. The through block (B) again extends past the crossed wall by 24 cm, but on the side opposite from the 1/2 block in the course below. Block B is followed on its left-hand side by a 1/2 block (C) combined with a 5 cm block. This is continued in all four directions with full blocks (Fig. 2).

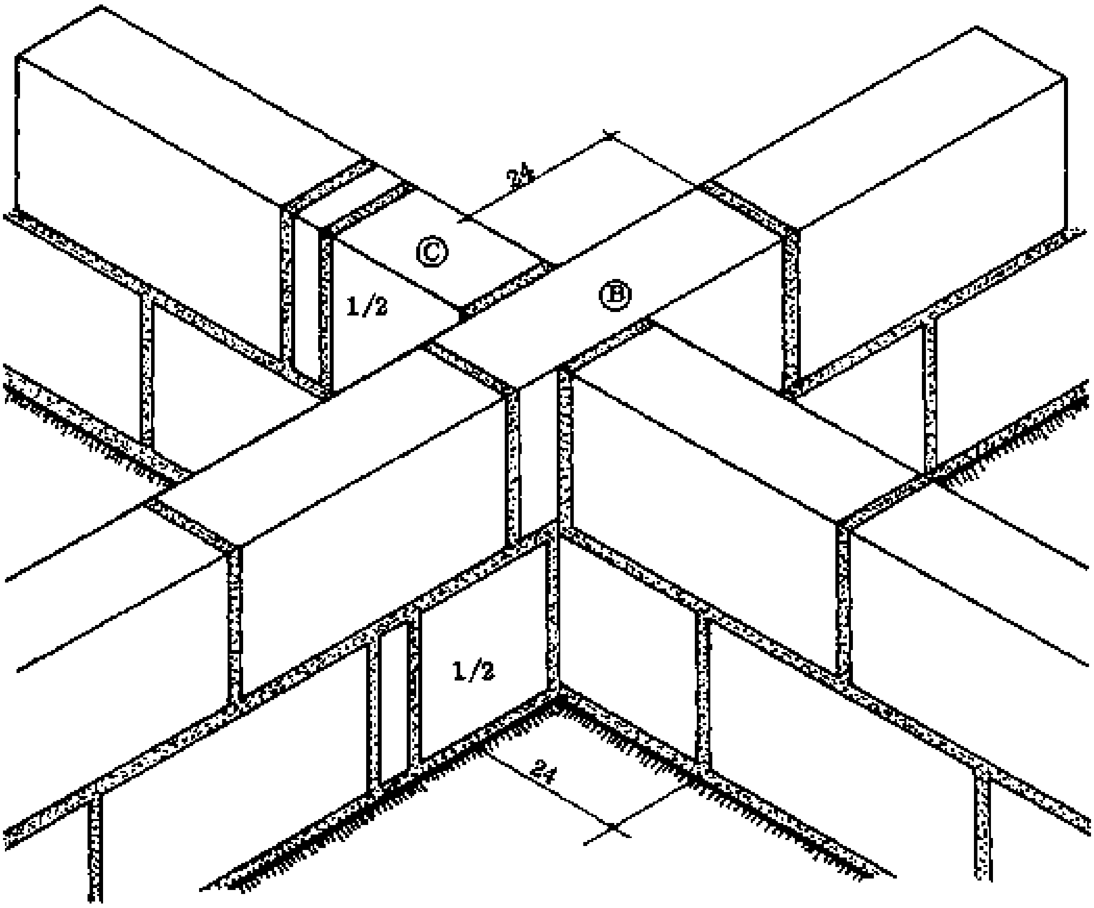

Fig. 2

In the first course the crossing block and the 1/2 block form a corner. This is also true in the second course but the corner is diagonally opposite from the one in the first course below.

- REMEMBER: All through courses in either wall consist of full blocks only. All crossed courses in either wall contain one 1/2 block combined with a 5 cm block.

NOTES:

The second method of making a cross junction in a sandcrete wall is different from the first method because 3/4 and 1/4 blocks are used instead of 1/2 blocks.

Because of this the rules for this bonding method are also different:

- All through blocks (Figs. 1 & 2, blocks A & B) project from the crossed wall by 12 cm at one end (12 cm is 1/4 block plus the joint). These blocks are followed by 1/4 blocks at the other end (Figs. 1 & 2).

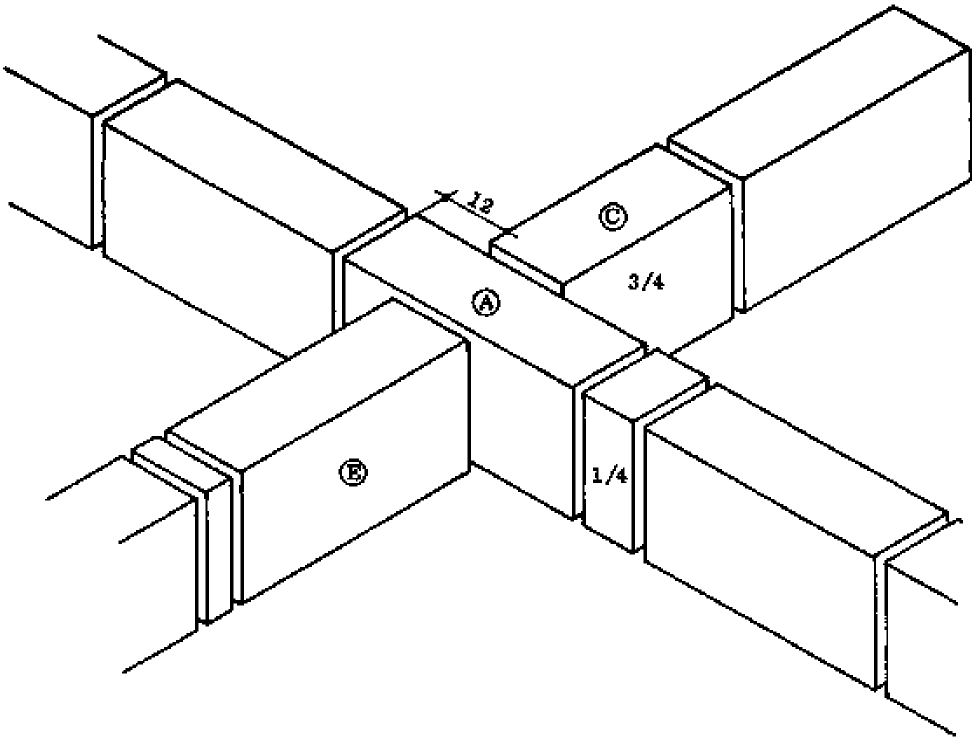

Fig. 1

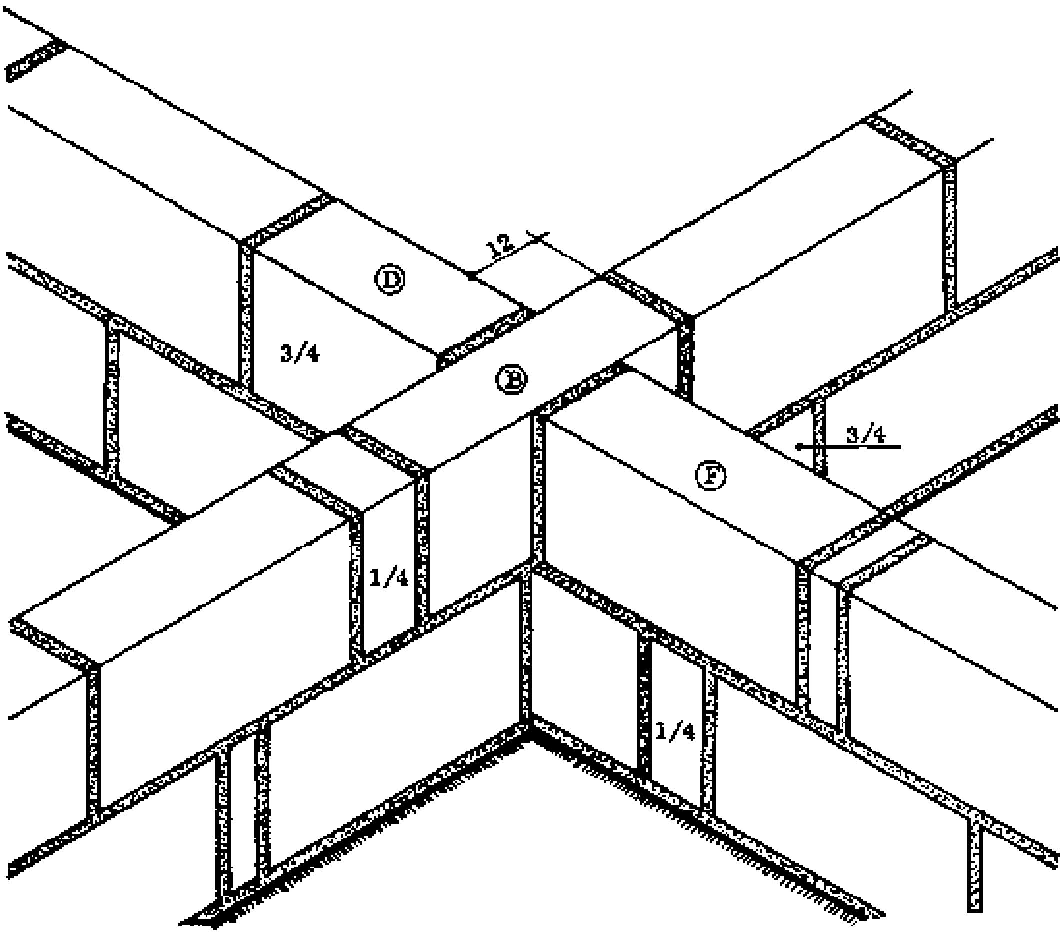

Fig. 2

- All crossed walls contain a 3/4 block (Figs. 1 & 2, blocks C & D) set directly against the through-going block. This 3/4 block is on the opposite side from the 1/4 blocks in the course below (Fig. 1). The crossed wall continues with a full block (Figs. 1 & 2, blocks E & F) and a 5 cm block, on the other side from the 3/4 block.

- NOTE: The above method involves a lot of block-cutting, which makes it less efficient than the other method.

Try to figure out more possibilities and discuss them with your fellow trainees, your instructors and your foreman on the building site.

NOTES:

Cross junction bond for rising landcrete walls

The arrangement of blocks to construct a cross junction with landcrete blocks is almost the same as for the footings (see previous pages).

Fig. 1 shows the bond for all courses with an odd number (1st, 3rd, 5th, etc.). These consist of full blocks only. The through block (A) is set exactly in the middle of the crossed wall.

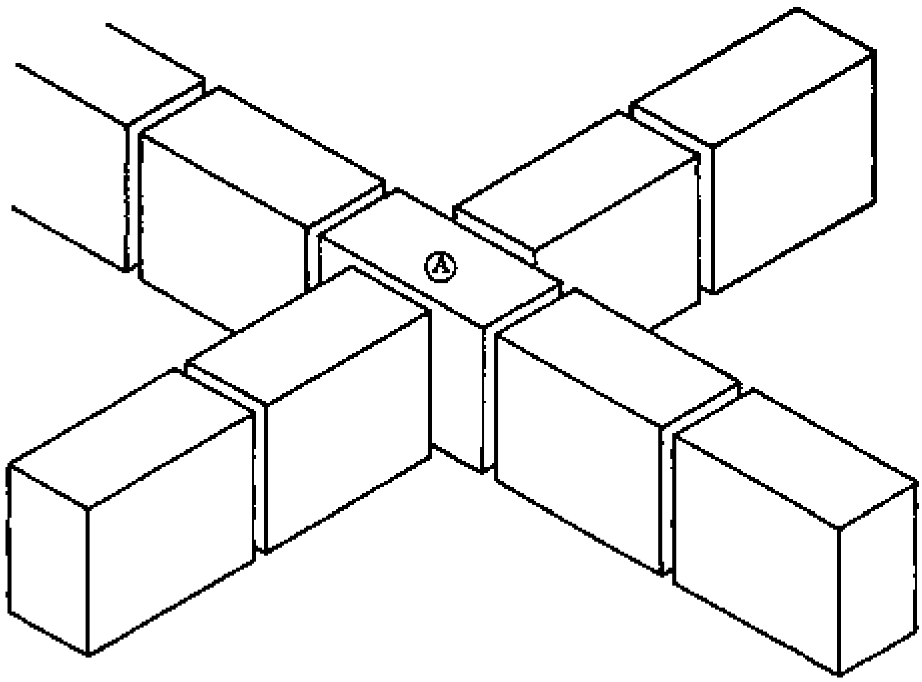

Fig. 1

The arrangement for courses with an even number (2nd, 4th, 6th, etc.) is shown in Fig. 2. These courses also start with a full block (B) set exactly across the middle of the through-going block below. This block is followed by 1/4 blocks on its ends and 3/4 blocks on its stretcher sides. This is continued in all four directions with full blocks.

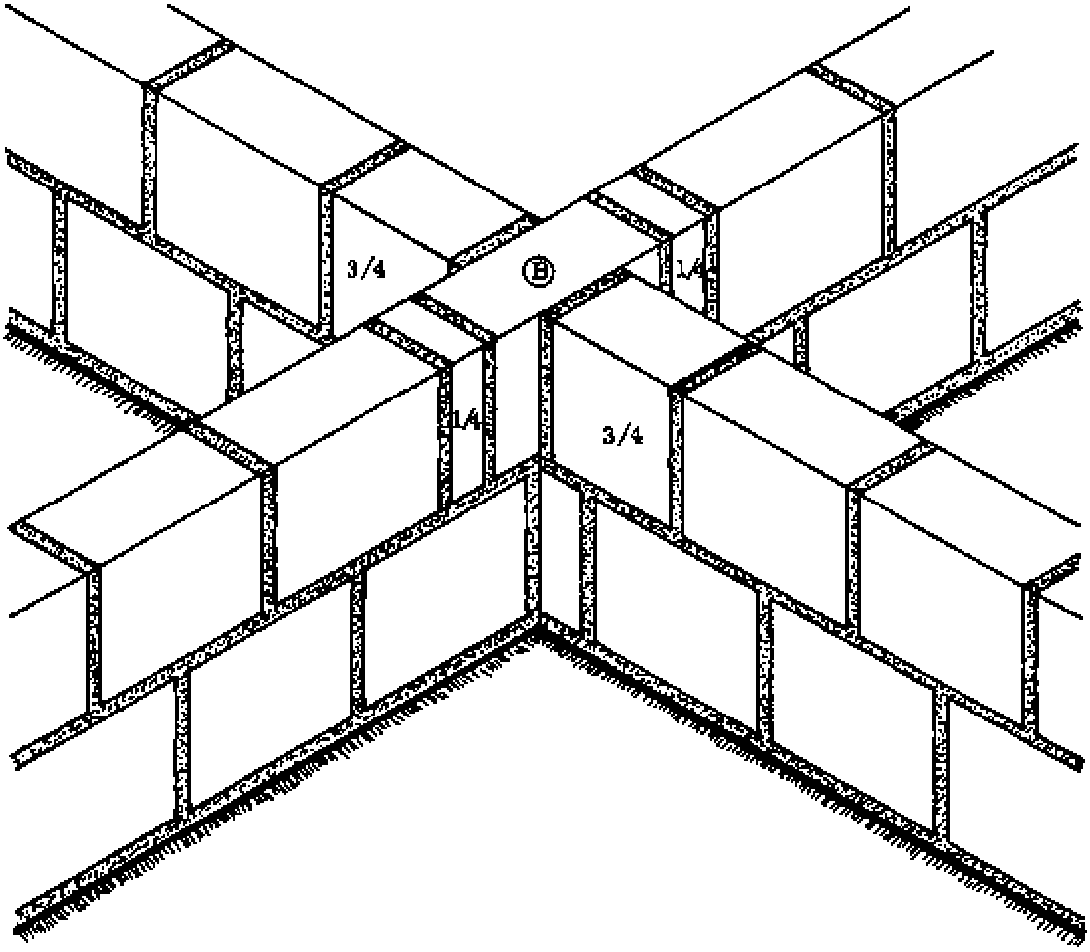

Fig. 2

NOTES:

Another method of bonding uses the cut blocks in alternate courses, unlike the last method which used all cut blocks in the same course. There is no waste in either method.

The first crossing (Fig. 1) is formed by two 3/4 blocks which project equally from the crossed wall, meaning that the joint between them is exactly in the centre of the crossed wall. The course is continued in all four directions with full blocks.

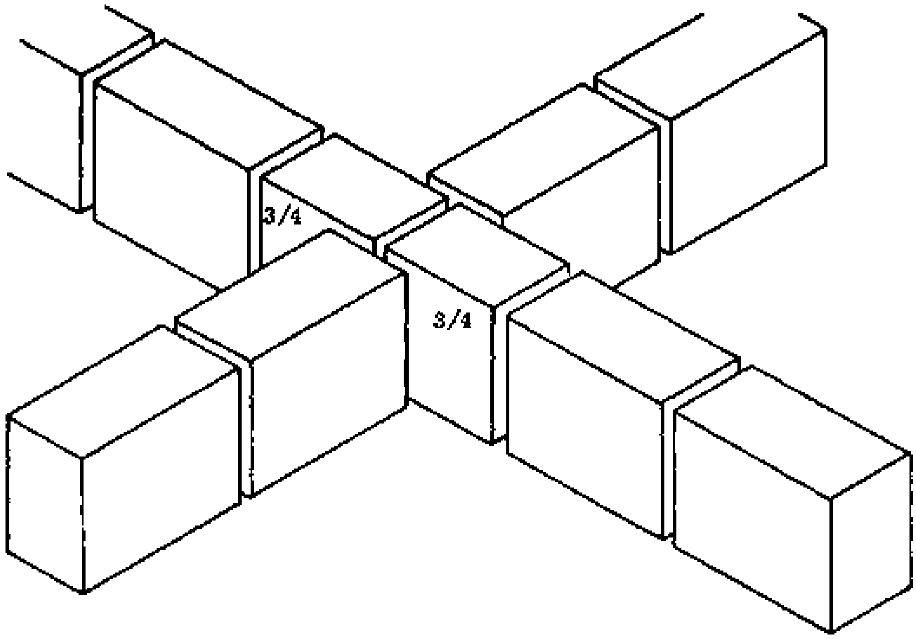

Fig. 1

The second course begins with a through-going block (Fig. 2, block A) set exactly in the middle of the crossed wall. In this way, three cross joints are covered by the block, instead of two as in the last method (Fig. 2).

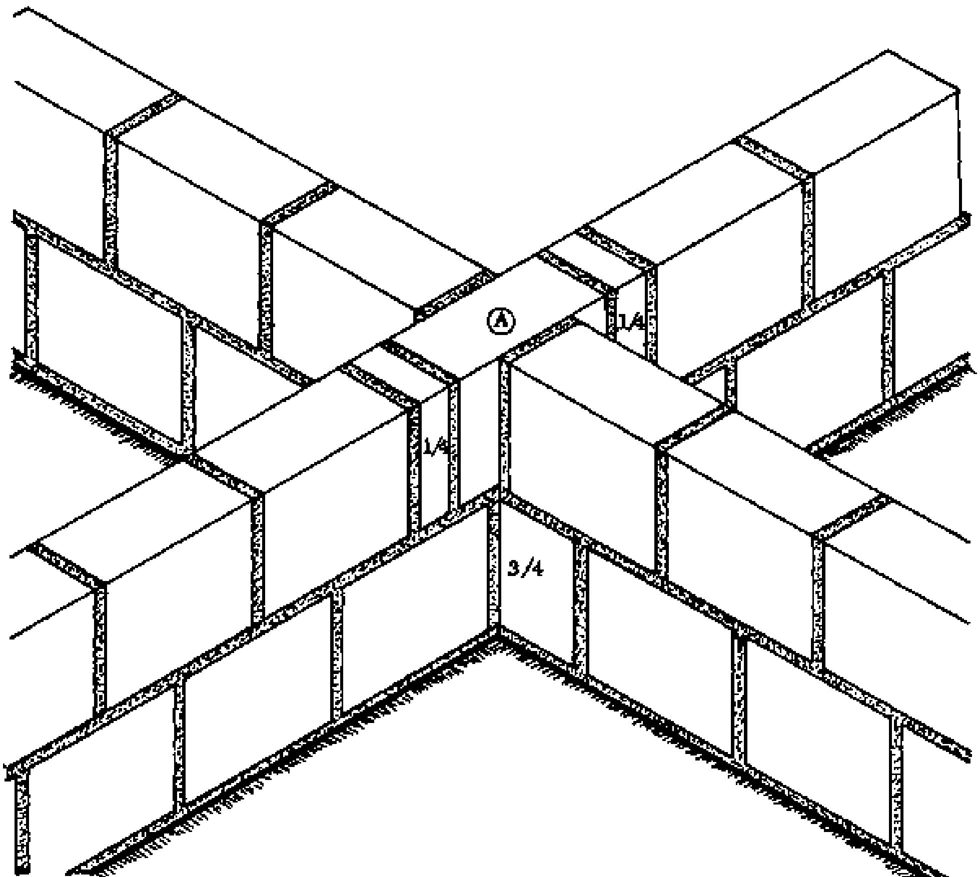

Fig. 2

The through-going block is followed by 1/4 blocks on its ends but then the course continues in all directions with full blocks.

Try to develop more possibilities but do not forget the requirements mentioned on page 46.

NOTES:

Footings - Plinth course - Rising landcrete wall

The illustration opposite shows what a cross junction will look like during the construction (Fig. 1).

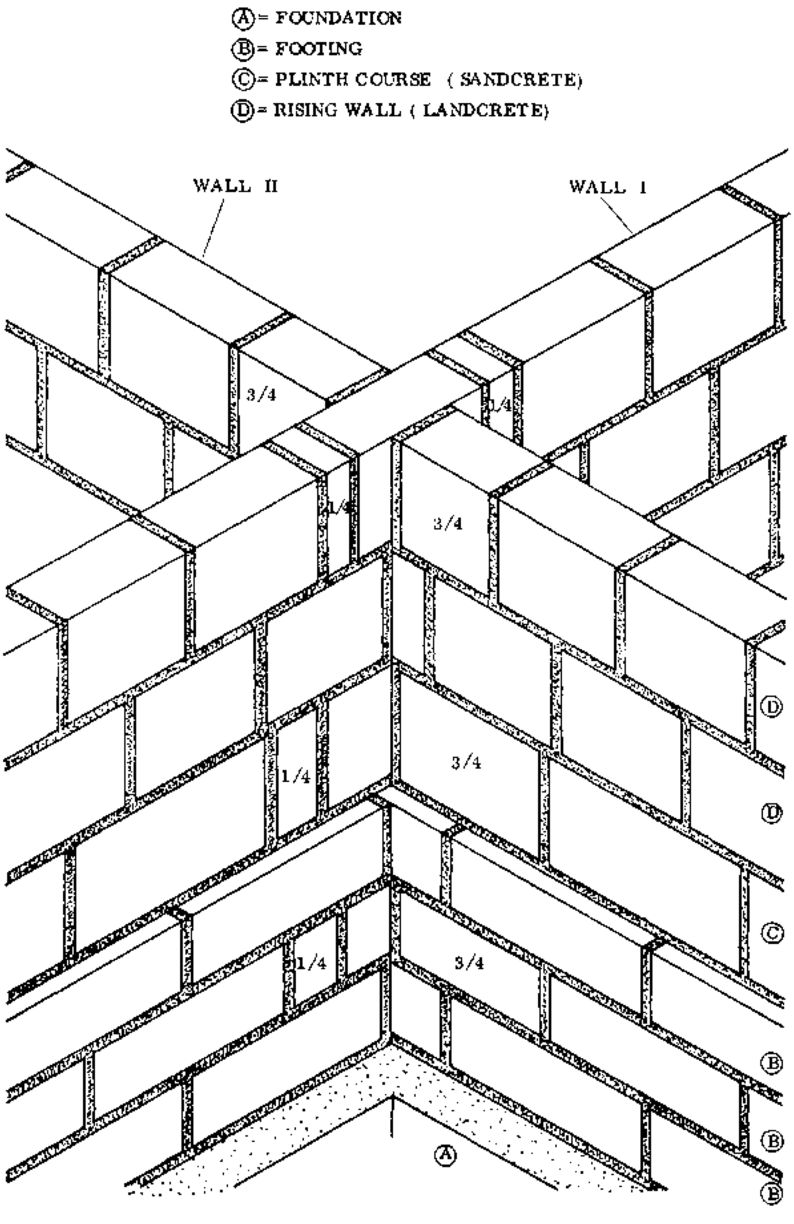

Fig. 1

Again, it is possible to maintain the half-block bond between the footings and the plinth course in wall I, as described on the previous pages. The bonding of the plinth course is a repetition of the bonding of the second footing course.

However, it can be seen that the half-block bond between the footings and the plinth course is not perfectly maintained in wall II. This is because of the 4 cm setting back on both sides as well as the reduced wall thickness.

The bond of the rising landcrete walls is the same as described on the previous pages. Only two courses are shown because the rest of the courses are repetitions of these two.

If you compare the bond of the rising landcrete wall with the plinth course, you will see that the half-block bond is not maintained between them. The only way it could be maintained is by cutting more blocks and changing the thicknesses of some of the joints. This would weaken the entire wall as well as wasting materials, so the Rural Builder should consider this bonding all right as it is shown here.

- REMEMBER: The rising landcrete wall is 1 cm thinner than the plinth course. Do not forget to maintain the "good" faces of the walls by laying the landcrete blocks flush with the plumbed faces of the plinth courses below.

NOTES:

PIERS

Attached piers

Attached piers; also called engaged piers, wall piers, blind piers or pilasters, are piers partly sunk into a wall and properly bonded into it.

Normally the visible part of a pier projects only slightly from the wall, but in Rural Building the projection may be as much as the thickness of the wall or even more.

Formerly, attached piers were most often used as decorative elements. The Rural Builder, however, uses attached piers chiefly to strengthen walls. At the same time he saves valuable materials such as cement, reinforcement bars and timber for formwork that would be needed for a reinforced concrete pillar.

The construction of an attached pier is very similiar to that of a T-junction. The only difference is that the wall which joins the front wall is very short, and with a stopped end, thus forming an attached pier (Fig. 1).

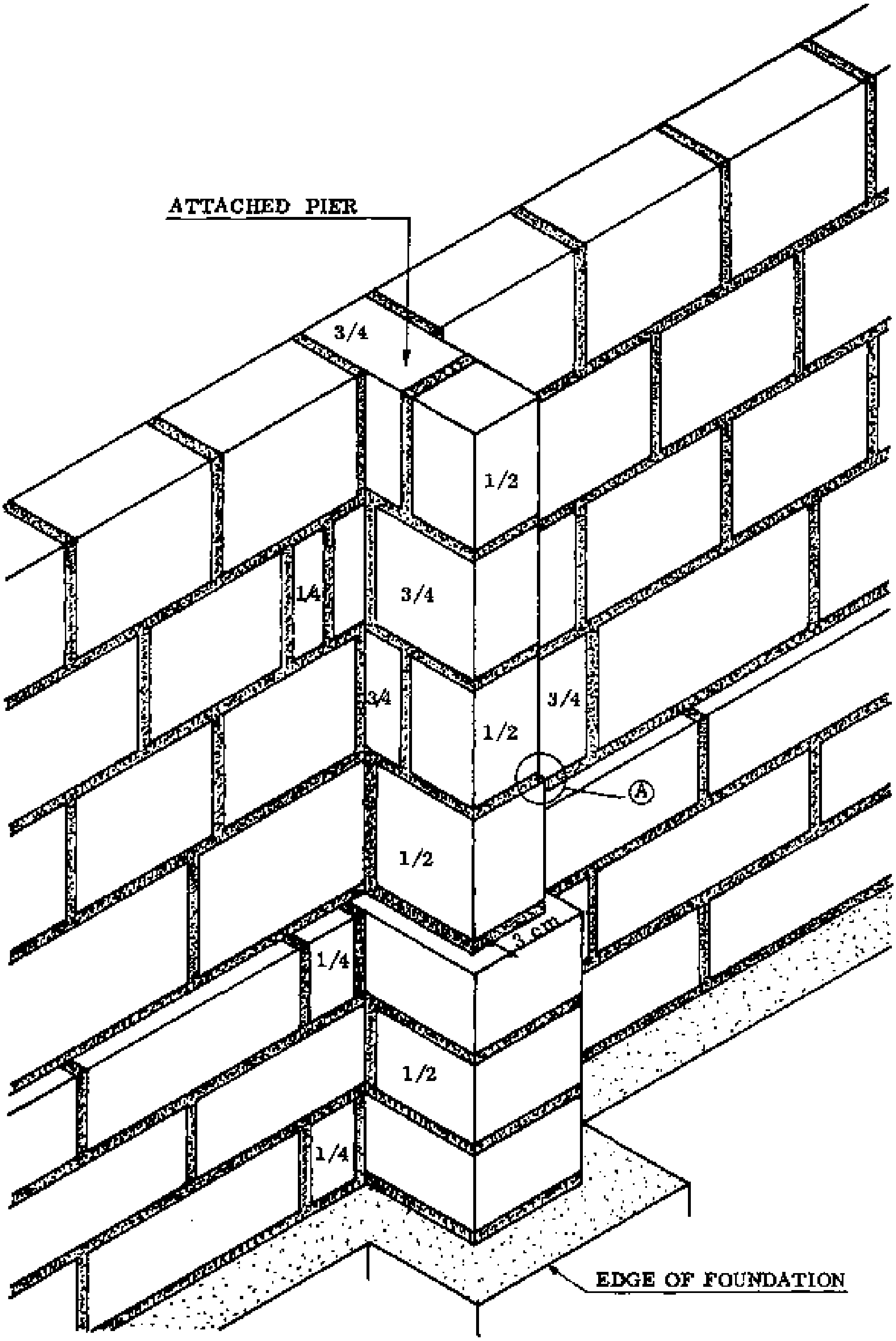

Fig. 1

The illustration shows that the bonds used to construct this pier are the same as those introduced in the chapter on T-junction bonds. Compare it with the text and illustrations from pages 38 to 44.

- NOTE: The plinth course is set back everywhere from the footings by 4 cm, except on the back side of the attached pier where it is set back only 3 cm (Fig. 1).

Do not forget to build the landcrete blocks flush with the plumbed (good) face of the plinth course. This means that on the other face of the wall there will be a 1 cm set-back caused by the 1 cm difference in size between the sandcrete blocks in the plinth course and the landcrete blocks in the rising wall (Fig. 1, point A).

NOTES:

Simple piers

A pier is a pillar-shape of brickwork, blockwork or stone which usually has a square or rectangular section, and supports a load. In Rural Building its mass also helps to anchor the roof structure.

The easiest way to construct a pier is by simply laying full blocks flatwise one above another (Figs. 1 & 2). This will be sufficient in situations where the pier does not have to carry a very heavy load.

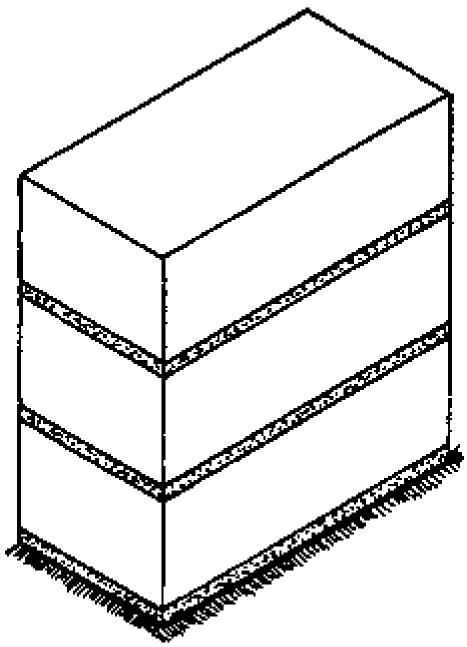

Fig. 1 SAND CRETE PIER

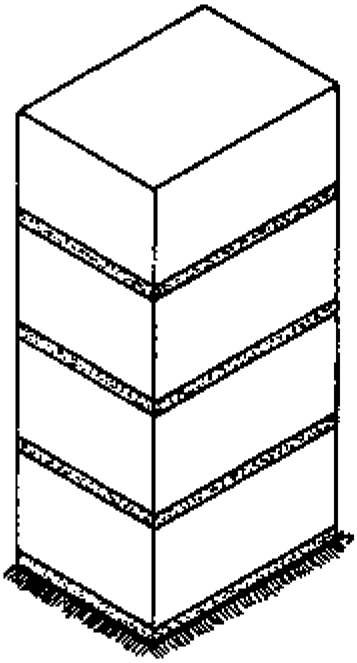

Fig. 2 LANDCRETE PIER

The disadvantage of this construction is that any roof anchorage must be fixed to the sides of the pier.

The best way to anchor a member of the structure to a pier is through the centre of the pier.

So-called perforated blocks can be made by using a specially made wooden mould (Fig. 3). In contrast to the common type of perforated block which has many smaller holes, this type has only one large hole through its centre. It is also called an open block.

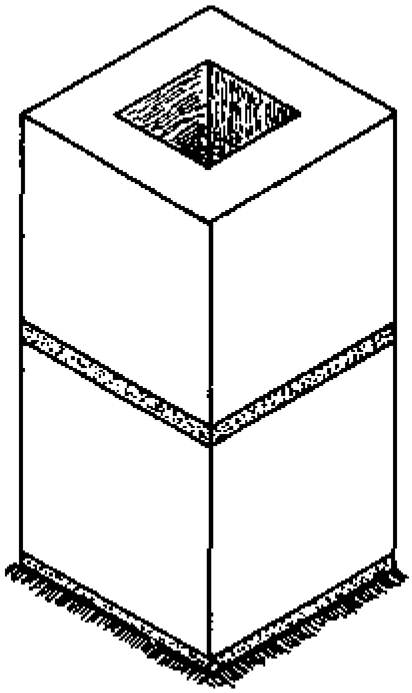

Fig. 3 PIER BUILT WITH OPEN BLOCKS

Open blocks are made by casting mortar between two frames (Fig. 4). The bigger frame is made similarly to the wooden mould described in the Reference Book, Tools section, page 29. The smaller frame is tapered and has a handle to make it easier to remove from the block.

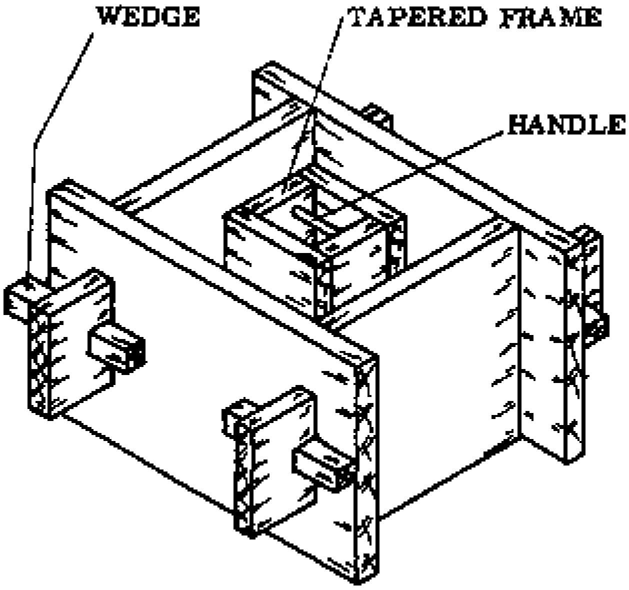

Fig. 4 WOODEN MOULD

After the pier is built, the anchoring bar is inserted in the hole and the remaining space is filled up with mortar or concrete.

NOTES:

Footings for piers

There are situations where piers are needed which not only have to carry heavy loads but also have to be very heavy in themselves. This is to anchor the roof against the suction of strong winds.

In order to save valuable building materials such as cement, reinforcement bars and timber, as well as to reduce the construction time, blockwork piers are often built.

There are several possible bonding arrangements. The bonds introduced in this chapter represent only a few types, but they will meet the requirements of the Rural Builder.

The type of bond which is used depends largely on which materials are available and on the size of pier which is desired.

The opposite illustrations show a bond for footings with sandcrete blocks laid flatwise. Refer to page 67 for another footing method. Both bonds can also be used to build up an entire pier, in case a heavy duty pier is desired.

All the courses in the illustration on the left consist of a pair of blocks which are set 2 cm out of line with each other at the header sides. You can see this 2 cm difference at points A, B, C, D in Figs. 1 and 2.

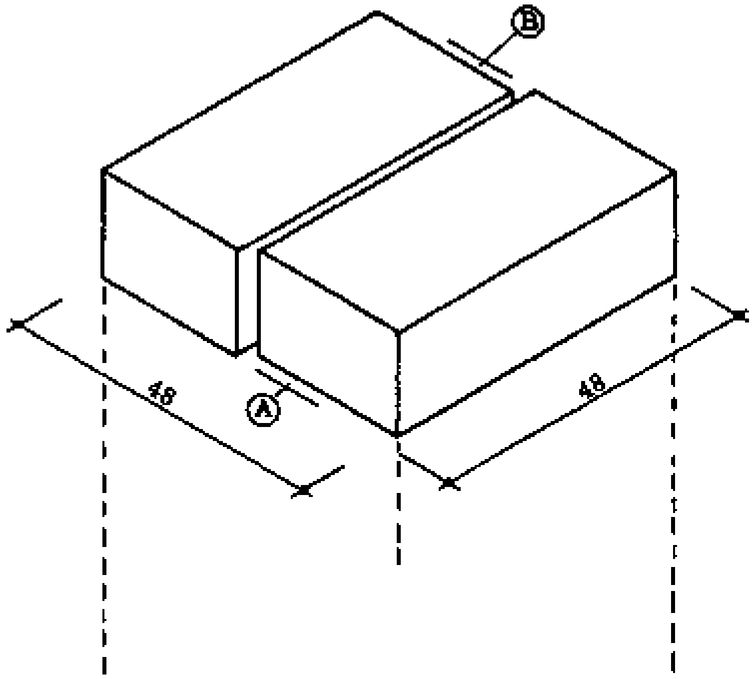

Fig. 1

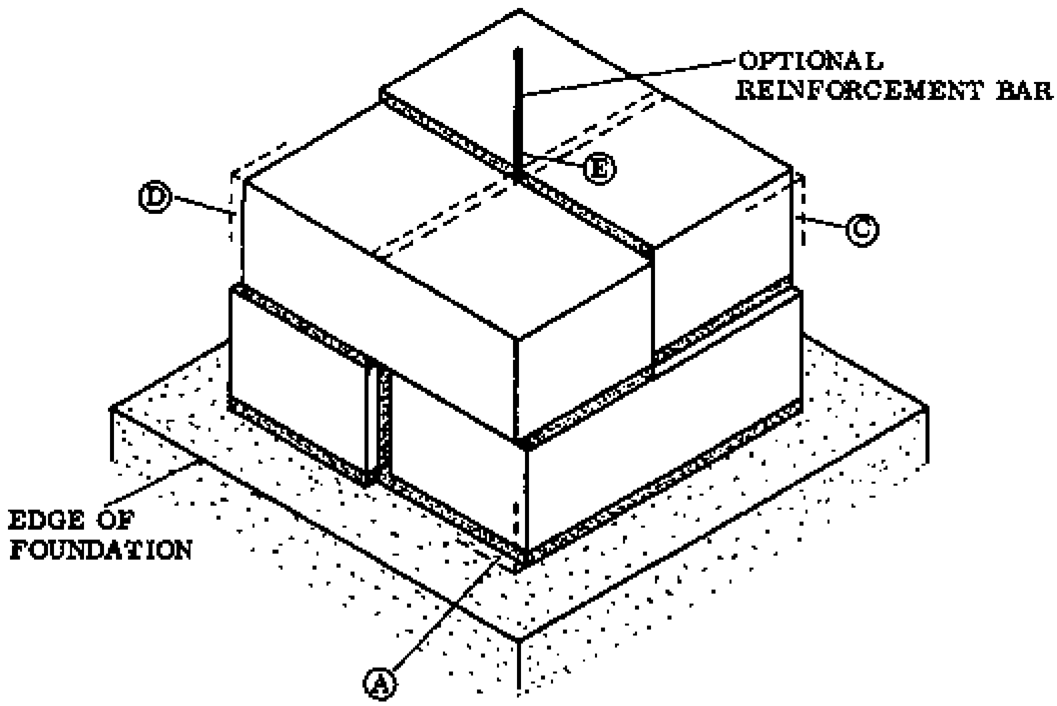

Fig. 2 FOOTING FOR PIER

This is done to maintain a square shape of 48 cm by 48 cm, since the width of the two blocks plus a joint is 48 cm, while the length of each block is only 46 cm. Since the courses cross each other, a reinforcement bar for anchorage could be built-in between the cross joints (Fig. 2, E).

NOTES:

Bonds for sandcrete piers

The following two bonds are also square-shaped but have shorter dimensions than the footing bonds: 34 cm by 34 cm.

Fig. 1 shows the best bond for a pier with the above measurements. This is because each course uses a total of 1 1/2 blocks, which means that there is no waste.

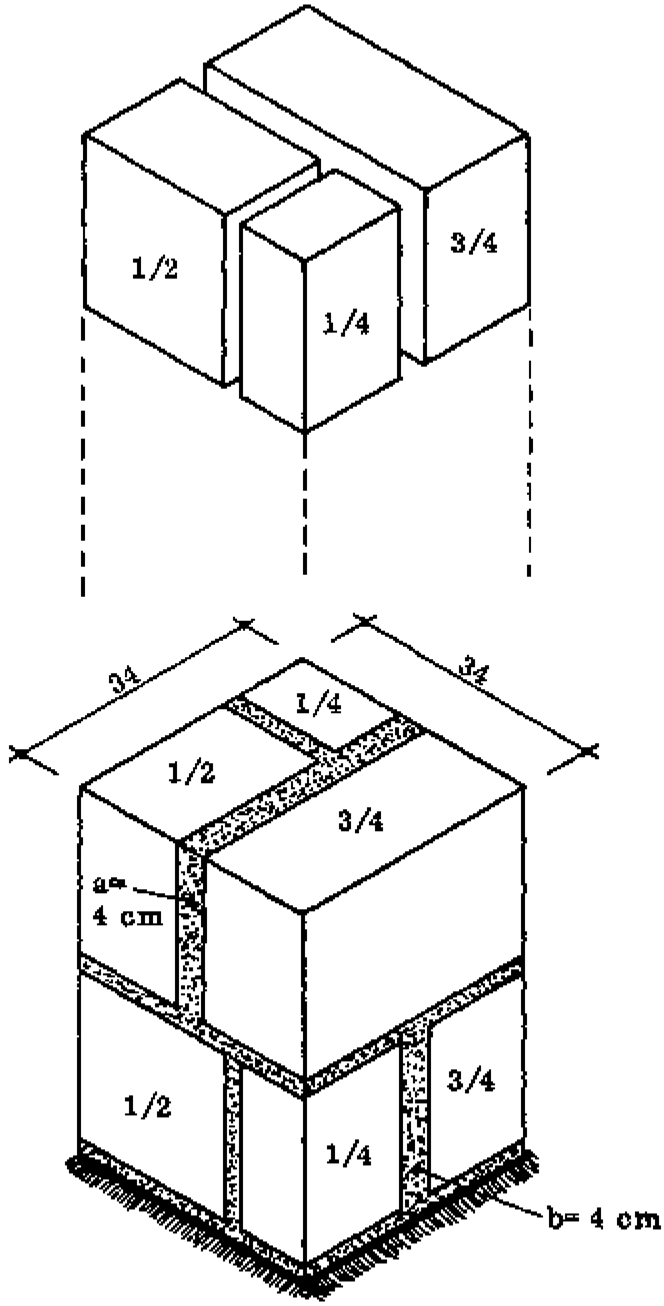

Fig. 1 SANDCRETE PIER EDGEWISE

The through-going cross joints in each course must be widened (Fig. 1, a & b) to 4 cm in order to obtain a width of 34 cm across the two blocks; 34 cm is the length of the 3/4 blocks.

The 3/4 block in each course is set over the 1/4 block below, and across the 4 cm joint, making an alternating arrangement as shown (Fig. 1).

Fig. 2 shows another bond for a sandcrete pier. The pier is built entirely of 3/4 blocks. The cross joints all go through and all have a 4 cm thickness.

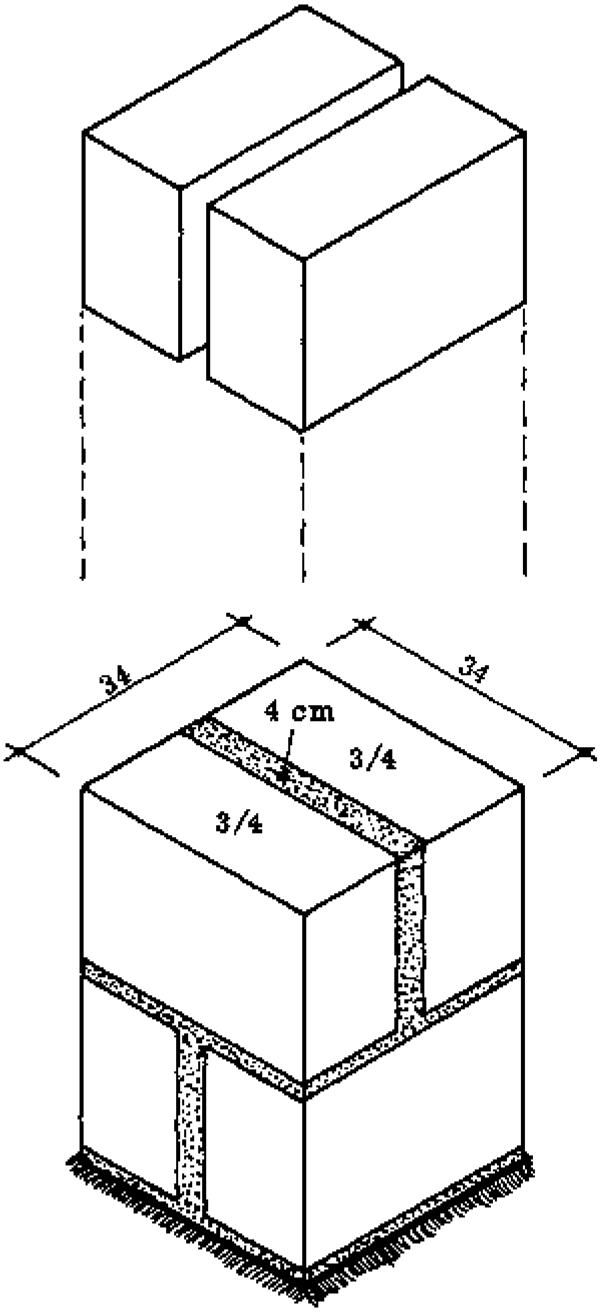

Fig. 2 SANDCRETE PIER EDGEWISE

It is obvious that this type of pier should be built only if there are a lot of 3/4 blocks left-over from another construction, because otherwise all the 1/4 blocks are left-over and wasted.

NOTES:

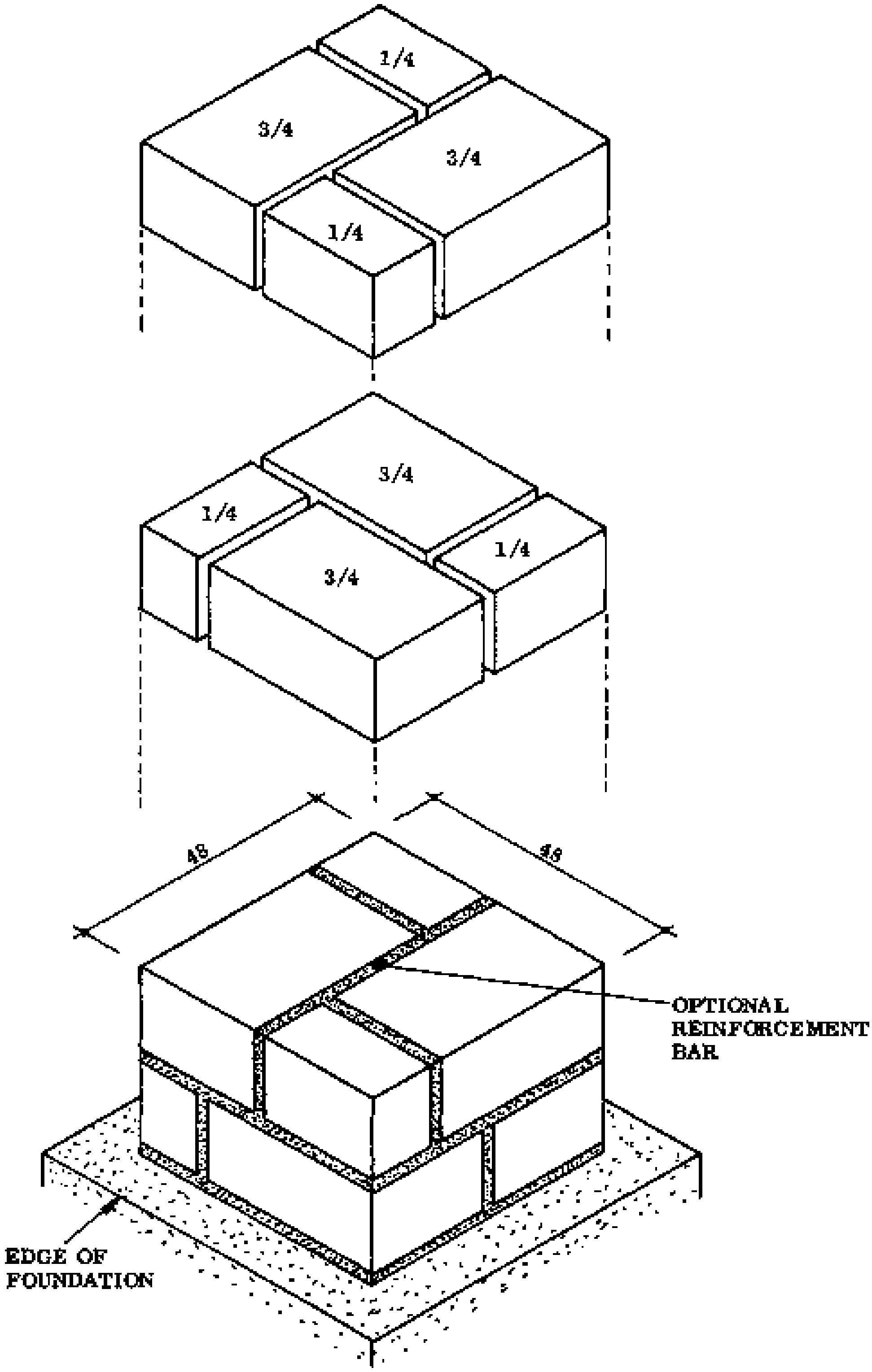

Fig. 1 SANDCRETE PIER FLATWISE

Bonds for landcrete piers

The examples of bonds for landcrete piers shown on pages 68 and 69 are similar to some of the bonds already explained. Fig. 1 shows a bond which is basically the same as the footing bond on page 63, except the blocks are laid edgewise.

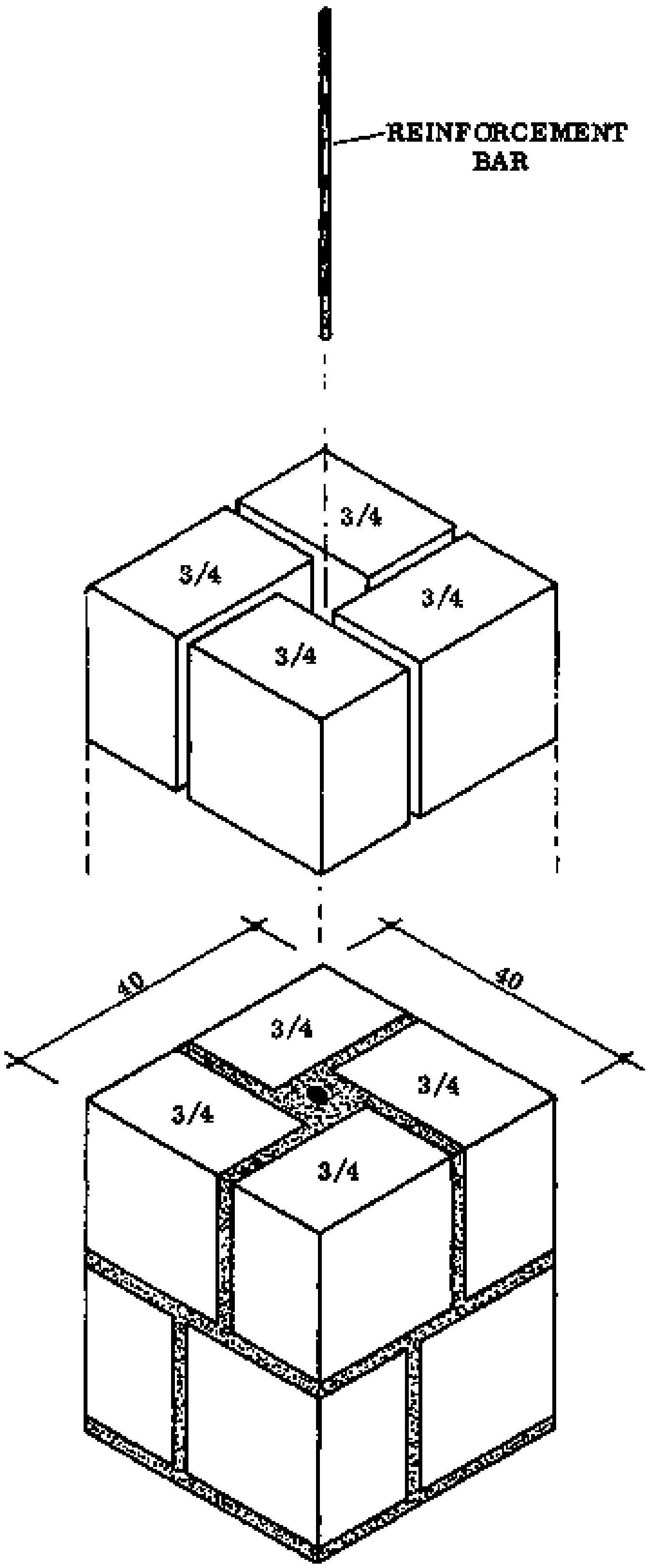

Fig. 1 LANDCRETE PIER EDGEWISE

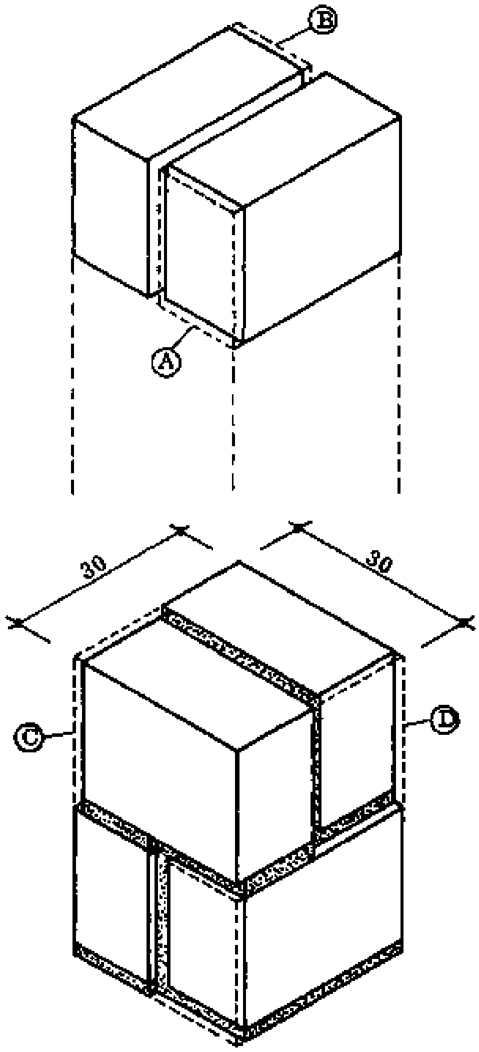

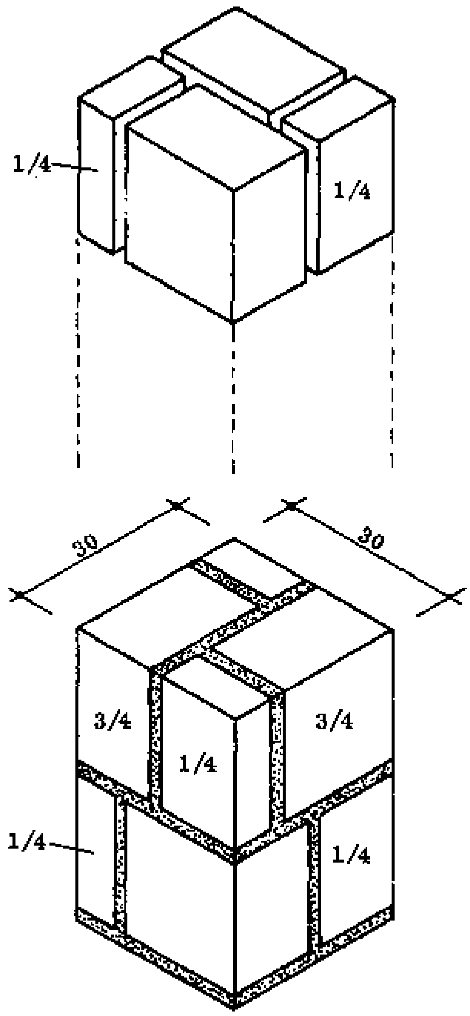

Fig. 1 LANDCRETE PIER EDGEWISE

Fig. 2 LANDCRETE PIER EDGEWISE

Each course consists of two full blocks laid edgewise and across the course below. In order to maintain a square shape of 30 cm by 30 cm, the blocks are set 1 cm out of line with each other at their header sides (see points A, B, C, & D).

The bonding method seen in Fig. 2 requires cutting two blocks per course and results in a rather weak bond. The Rural Builder should avoid making this type of pier except when he needs to use up some part-blocks left over from another construction.

Fig. 1 on page 68 shows another bonding method for landcrete piers with the blocks laid edgewise. This method has the advantage that an iron rod can be set into the centre of the blocks, either to reinforce the pier or to act as an anchor, or both.

- NOTE: Landcrete piers should not carry heavy loads such as a truss or a concrete beam, because they are too weak. They may be used to support and anchor overhanging rafters of a roof above a verandah.

If a landcrete pier has to carry heavy loads, its dimensions should be increased to a minimum of 55 cm by 55 cm.

NOTES:

PART 2: BASIC CARPENTRY TECHNIQUES

TECHNICAL TERMS

- GRAIN: This refers to the direction of the wood fibres. Length is measured along the direction of to grain. Width is measured across the grain at right angles to the length. When wood is cut across the grain, END GRAIN is exposed.

- WITH THE GRAIN: This term is used in connection with planing. If the fibres are cut cleanly and smoothed down by the cutting iron, the wood is said to be planed with the grain; like stroking a dog's coat so the hair lies down smoothly.

- AGAINST THE GRAIN: This means that the plane goes in the opposite direction, lifting and breaking the wood fibres and leaving a rough surface; as if a dog's coat were brushed the wrong way and roughened.

- STRAIGHT GRAIN: The wood fibres lie straight and parallel to the length of the piece of wood. Such wood planes smoothly and easily.

- CROSS GRAIN: The wood fibres do not lie parallel to the length of the piece.

This makes the wood hard to work.

- BEVEL: This is made by planing off the sharp edge to form a new surface which is not at right angles to the side of the piece of wood. A CHAMFER is a special bevel, cut at 45 degrees. A "through" chamfer or bevel runs the whole length of the edge (Fig. 1). A "stopped" chamfer or bevel is stopped at one or both ends (Fig. 2).

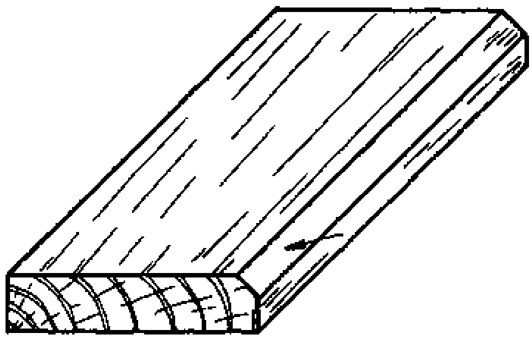

Fig. 1

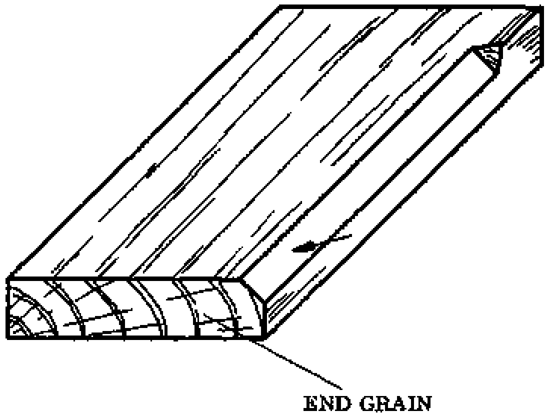

Fig. 2

- GROOVE: This is a recess cut along the grain. A “through” groove runs the whole length of the piece (Fig. 3, a); while a “stopped” groove is stopped at one or both ends (Fig. 3, b).

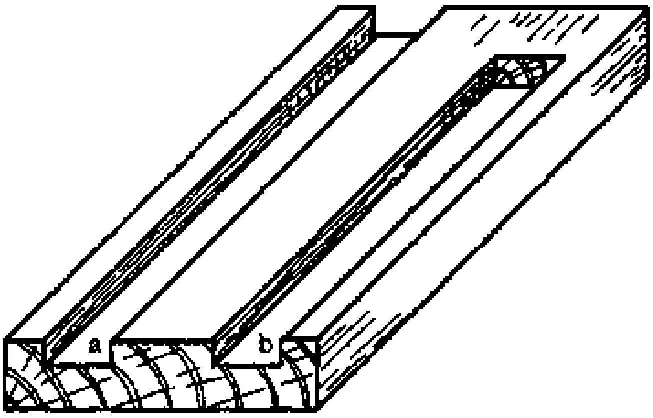

Fig. 3

- TRENCH: This is a recess cut along the grain. A trench can also be either through (Fig. 4, a) or stopped (Fig. 4, b).

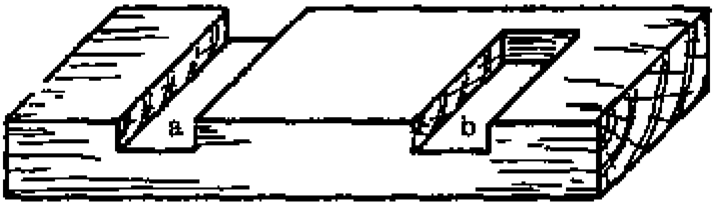

Fig. 4

- REBATE: This is a recess cut along the edge or across the end of a board as in Figs. 5 & 6.

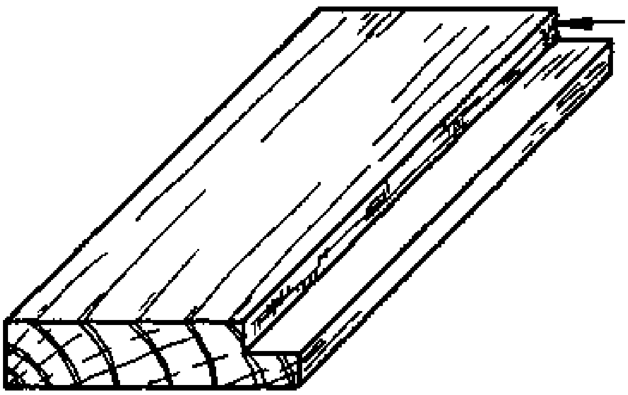

Fig. 5

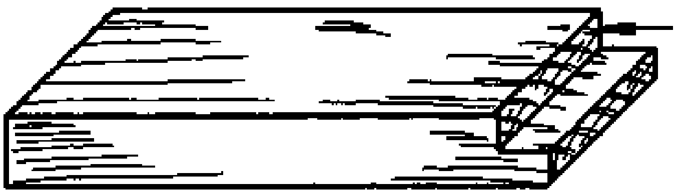

Fig. 6

- TRUE: In woodworking this indicates that a surface is flat and perfectly level.

- SQUARE: Square angles are exact 90 degree angles. “Square” is used to describe pieces in which all the corners and edges have 90 degree angles.

- SHOULDER: The vertical portion of a trench or rebate (arrows, Figs. 5 & 6).

TESTING BOARDS

When you prepare a board for use in some project, you must make certain tests on it to make sure that it is flat and true in all directions and that the angles and corners are all square. These tests are made during the actual preparation of the timber, but we describe them here separately because they are generally useful techniques which you will need again and again in your work.

Before you continue reading, look in your Rural Building Reference Book, Tools section, page 36, and read about the try square, which is one of the tools you will need for testing boards. You will also need winding strips (Fig. 2) and a straight edge (Fig. 1), which is usually a piece of wood with one long edge that you are sure is perfectly flat and straight.

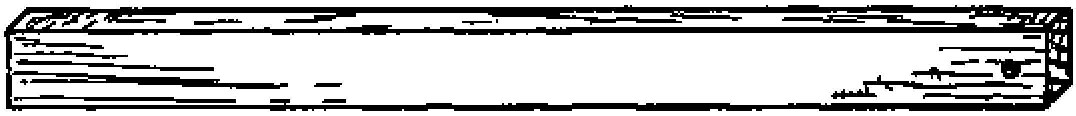

Fig. 1

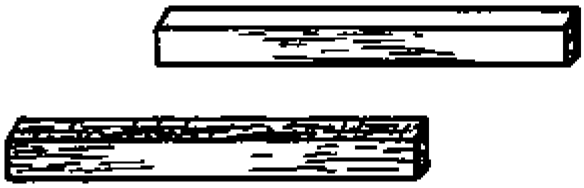

Fig. 2

Also look in the Reference Book, Materials section, page 132 and find out what is meant by the words: twisting; cupping; and bowing.

Winding strips

These are used as an aid to help you to see if a board twists or “winds”. They are two strips of wood about 35 cm long, 2,5 cm wide and 1, 5 cm thick. The top edge has a bevel and all the edges must be perfectly straight. One of the two strips may be made darker so that sighting along them is easier (Fig. 2).

How to test small work pieces

Test with the try square or the edge of a jack plane in different positions for flatness. Also test the squareness of the edges with a try square at a few different spots (Fig. 3).

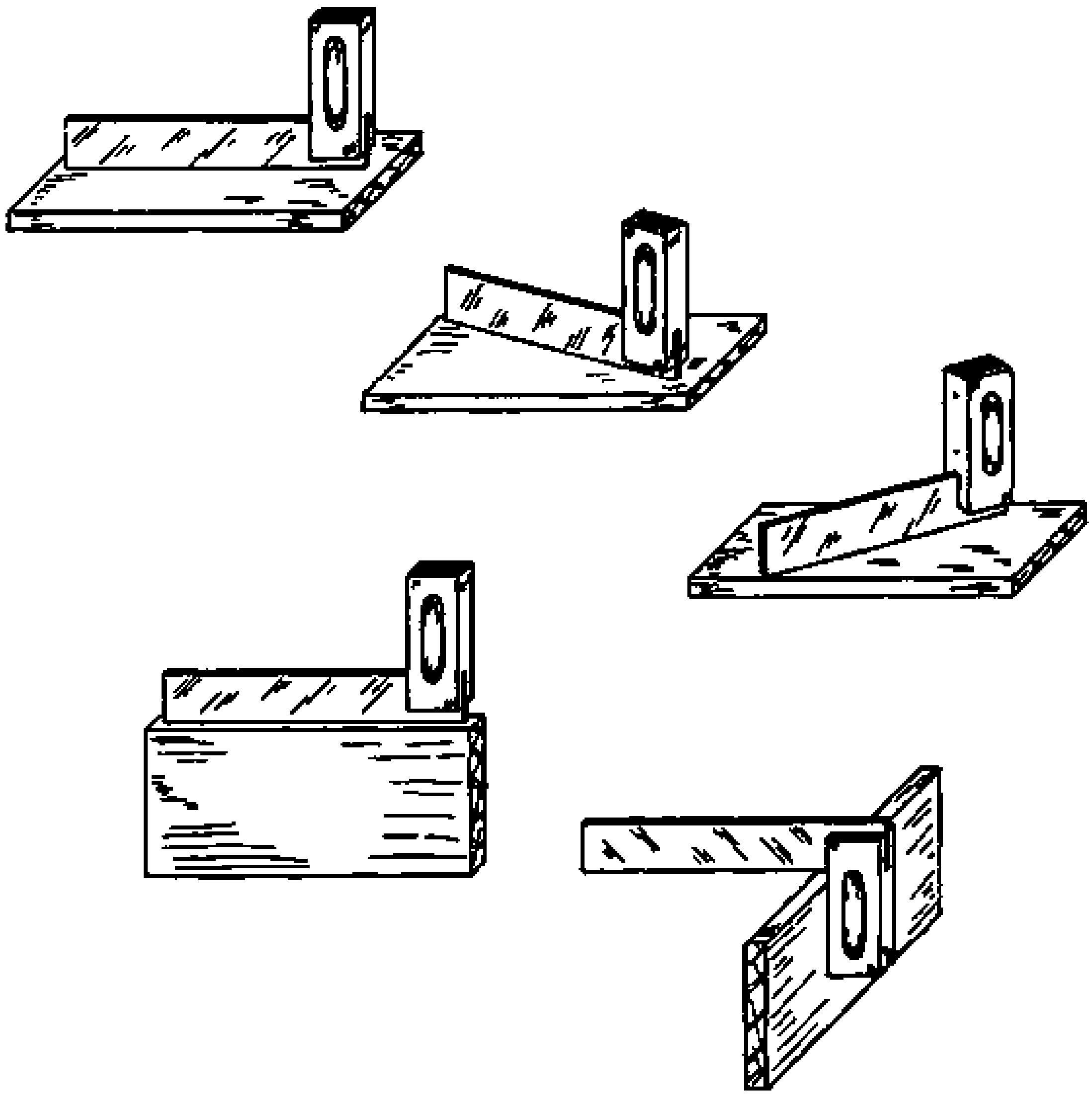

Fig. 3

NOTES:

How to test long work pieces

Test for winding (twisting) using the winding strips; one at each end of the board, across the grain. Go to the end of the board and look along the board, with your eye just at the same level as the strips (Fig. 1). When the top edges of the strips do not appear parallel (Fig. 1a), the board is not flat. Check with the winding strips at different spots, making sure that the strips are parallel (Fig. 1b).

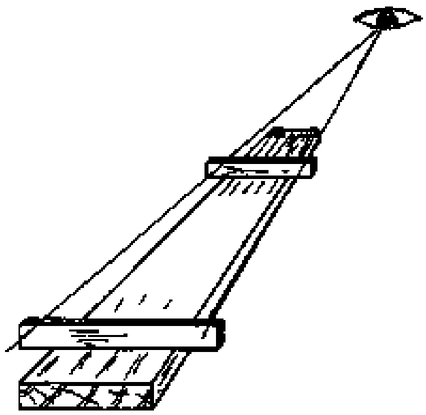

Fig. 1

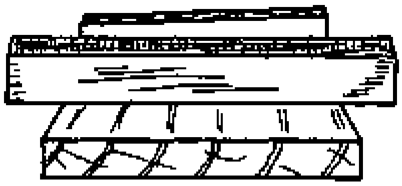

Fig. 1a

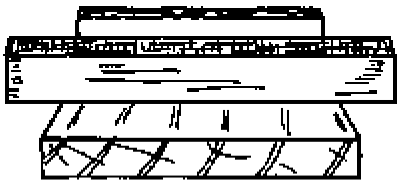

Fig. 1b

Test for cupping by putting a try square across the grain at different spots along the board. If you check this against the light, you will see all of the uneven places (Fig. 2).

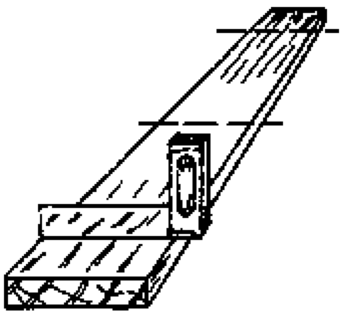

Fig. 2

To check for bowing you can do the same test, using a straight edge along the grain (Fig. 3).

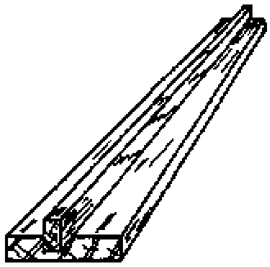

Fig. 3

For long boards you can sight along the boards with one eye closed, to see the places which are uneven (Fig. 3a).

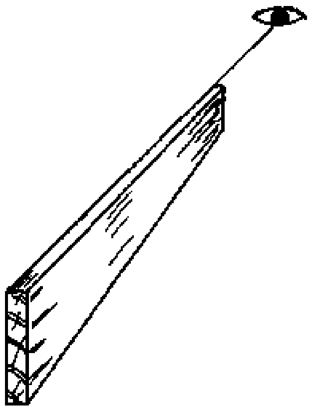

Fig. 3a

Using a try square, check whether the angle between the face side and the edge is exactly 90 degrees. Make this test at several places (Fig. 4).

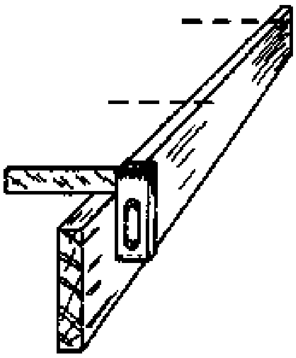

Fig. 4

When all these tests have been performed with satisfactory results, the board will be straight and true in all directions and it is ready to be used in a project.

NOTES:

MEASURING AND MARKING OUT TIMBER

Accurate measuring and marking out are the first requirements for success in the building trade. Common measuring and marking tools are the folding rule and zig-zag rule (Reference Book, page 11).

Measuring with a rule

To measure between two points, place the rule on one point and read the mark nearest to the other point (Fig. 1).

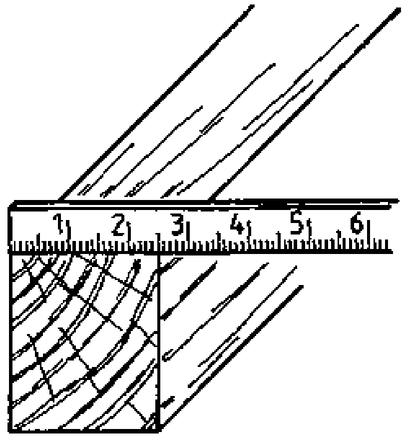

Fig. 1

When the end of the rule has become worn and inexact, you can still get an exact measurement. Place the 1 cm mark of the ruler at the first point and read at the second point. The true measurement is that reading minus 1 cm. For example, the measurement in Fig. 2 is: 3,5 cm minus 1 cm equals 2,5 cm.

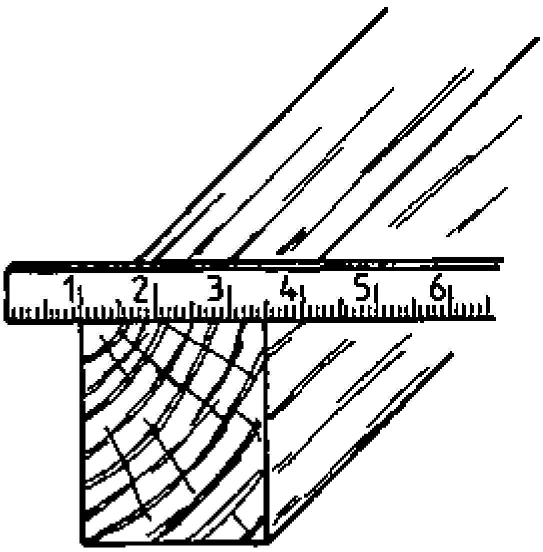

Fig. 2

Marking out with a rule

To mark out measurements with a rule, place the end of the rule (or the 1 cm mark) carefully at the start of the measurement and then make a fine mark with a pencil exactly even with the marking on the rule at the correct distance.

For very accurate marking and measuring, lay the rule on its edge so that the marks on the rule touch the work (Fig. 3).

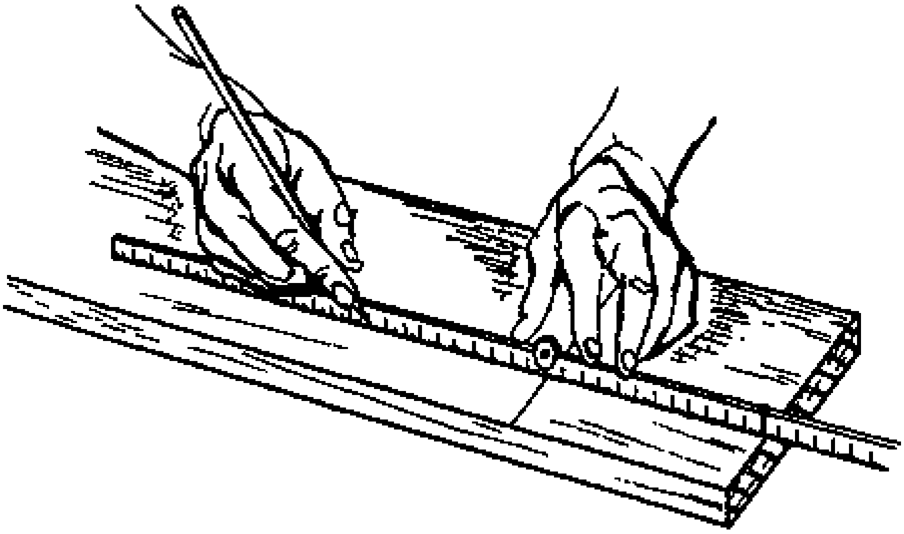

Fig. 3

To mark out several measurements on a line, it is best to mark all of the measurements without raising the rule or moving it. If the rule is moved and each measurement is made separately, there is a much greater possibility of error.

NOTES:

Marking with a pencil

When a marking gauge (Reference Book, Tools, page 39) is not available, straight lines can be gauged along timber by one of the following methods.

- Grasp the pencil lightly in your closed fist with the point protruding the desired distance. For example, to make a line 1 cm from the edge of the timber, the point of the pencil should stick out exactly 1 cm from your fist. Now pull the pencil along the board keeping your thumbnail pressed firmly to the edge of the board (Fig. 1).

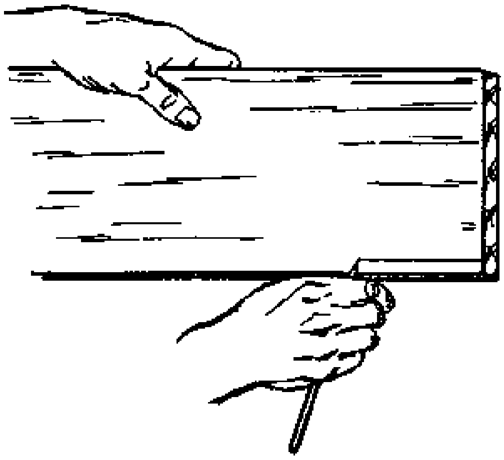

Fig. 1

- To gauge lines further from the edge of the board, use a rule and a pencil. Grasp the rule in one hand with your thumbnail at the desired marking. Then draw the rule along while keeping your thumbnail against the edge of the board. With your other hand hold a pencil at the end of the rule to make the line (Fig. 2).

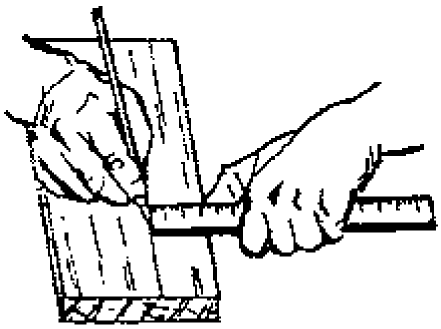

Fig. 2

With these methods you should be careful not to get splinters in your fingers.

- Another method of drawing lines parallel to an edge is with a small pencil gauge. This is simply a small, rebated wooden block which is pressed against the edge of the timber and used to guide the pencil, as shown in Fig. 3. The pencil gauge is often used to mark out the position of chamfers.

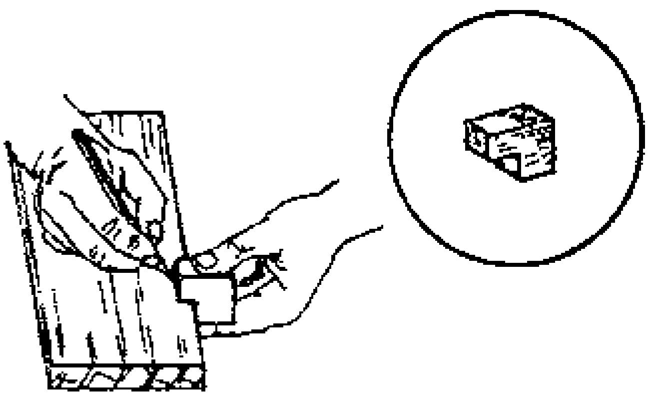

Fig. 3

- A straight edge can also be used in marking out longer lines.

Marking with a chalk line

A quick and simple way of marking out a straight line on any surface is with a chalk line. This is simply a piece of string that has been rubbed with chalk until it is coated in chalk dust (charcoal may also be used for this purpose).

To use the chalk line, stretch the line between two points which are the ends of the line you want to mark. Hold it in place by tying the ends to nails, or have a helper hold it for you.

Lift the line up in the middle and allow it to snap back (Fig. 4), making a straight chalk line on the surface.

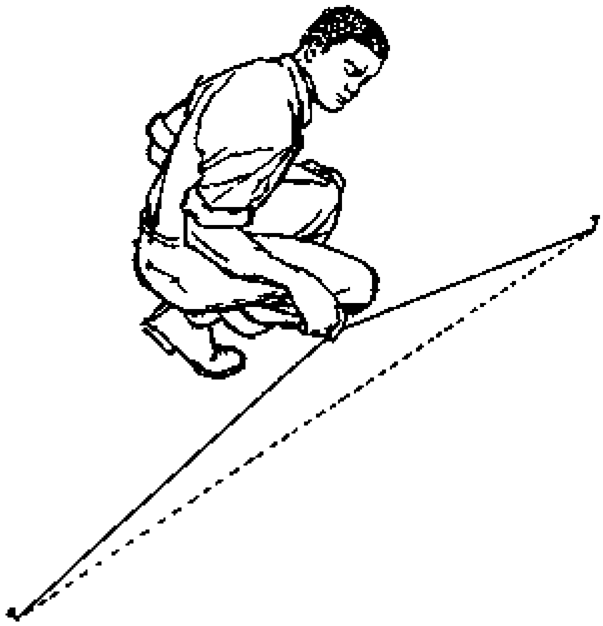

Fig. 4

NOTES:

TIMBER CONSTRUCTIONS

The last few lessons were about the very basic things you will need to know before you can actually make any construction of wood. Therefore we started with some technical terms which are important because you will see them again and again in the lessons and will use them in practical work.

The next sections include all the information you will need to prepare for a project: how to get the wood pieces to the right size and shape; how to mark the timber; and how to plan a project using a cutting list. Included here is a section on nailing and one on driving screws. Before you study those sections, look up nails and screws in the Reference Book, Products, pages 207 to 211, so that you are familiar with the parts of nails and screws and how they look.

Each section starts with a list of tools. Refer to the Reference Book, Tools section, and learn about each of these tools before you study the rest of the section.

NOTES:

PREPARATION OF TIMBER

In order to carry out the construction of any practical exercise or project, it is essential to have the wood pieces for the project prepared so that they have the correct size, true and flat surfaces, and square corners and angles.

There is of course a correct procedure to be followed for this preparation. It is important to carry out the following steps in their correct order on every piece of timber, whether large or small.

An easy way to remember the steps in their correct order is to keep the following word in mind: FEWTEL.

Face	Edge	Width	Thickness	End	Length
F	E	W	T	E	L

The tools which are required for this preparation are the bench, jack plane, straight edge, winding strips, pencil, try square, marking gauge, charcoal line, back saw, ruler and crosscut saw. Look these up in the Reference Book and make sure that you understand what they are and how they are used.

NOTES:

Sequence of operations for preparing timber

Step 1. Plane the face side (F)

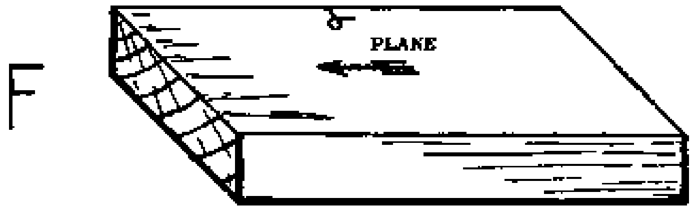

- Put your work on the bench with the better side up. If the board is not flat, put the hollow side down to keep it from rocking or moving around. In the case of very long or thin boards or twisted or deformed boards, put thin wedges of wood underneath where needed, to keep the work steady and keep it from bending in the middle during planing.

- Plane this side perfectly true.

- Test for flatness with the straight edge, winding strips and try square.

- Mark this side as the face side; the face mark should point to the edge which will be the face edge. The face edge will be the best edge of the board.

Step 2. Plane the face edge (E)

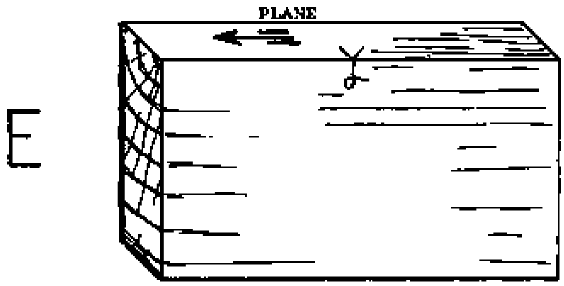

- Fasten your board to the side of the bench, with the face mark up. The planed side must be towards you and not against the bench, unless this would mean you would have to plane against the grain. In that case, you should turn the board so the other edge is up, keeping the face side towards you because the try square has to be set against the face side.

- Plane the face edge perfectly straight and square to the face side.

- Test for straightness with the straight edge and for squareness with the try square.

- Mark it with a face edge mark pointing to the face side.

Step 3. Plane the width (W)

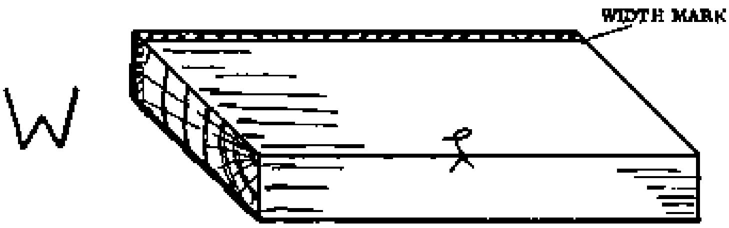

- With a marking gauge, mark the width of the board. Press the gauge against the face edge and mark on the face side.

- Plane down to the middle of the gauge line and be careful to get a square, straight edge when you reach the mark.

- Test for flatness with a straight edge and try square.

NOTES:

Step 4. Plane the thickness (T)

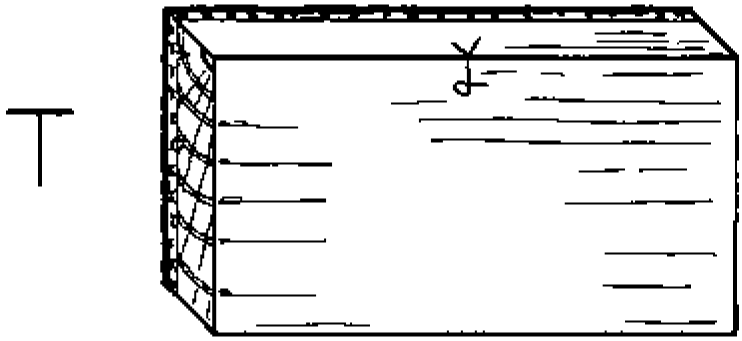

- Use a marking gauge to mark the thickness of your board. Press the gauge against the planed side and mark both edges.

- Plane down to the middle of the gauge lines.

- Test for flatness as you get near the two marked lines. Be sure to check for flatness across the board at several points. Check for winding with the winding strips.

Generally timber is not prepared to the exact length. Waste is left on each end to protect the corners from damage. If it is necessary to prepare it to the exact length, the procedure is as follows:

Step 5. Cut one end (E)

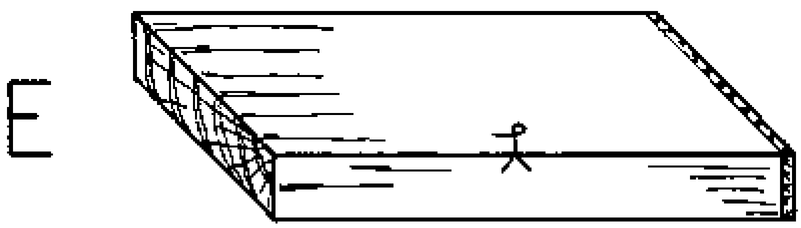

- With a try square, square the best end; with as little waste as possible.

- Cut that end perfectly square to the face side and face edge. Saw on the waste side of the line.

- Test for squareness in all directions.

- Mark the end with a cross, so that you know which is the prepared and tested end.

Step 6. Cut the length (L)

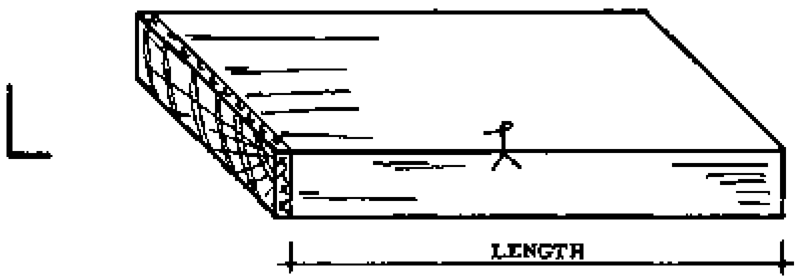

- Measure the required length from the prepared end and square with the try square.

- Cut that end perfectly square in all directions.

- Test it with a try square.

NOTES:

Timber marks

The purpose of face marks, as they are shown under preparation of timber, is to show clearly the prepared and tested sides and the edges which are square.

During all further marking, squaring and gauging we should try to work from these sides and edges.

Marking of frames

Making frames is an important part of Rural Building. We have to mark the members of a frame in a standard way so that we do not confuse their positions.

- Select and prepare the timber according to the sequence given in the section on preparation of timber. Lay out the various members as they will be when they are finally assembled into a frame (Fig. 1).

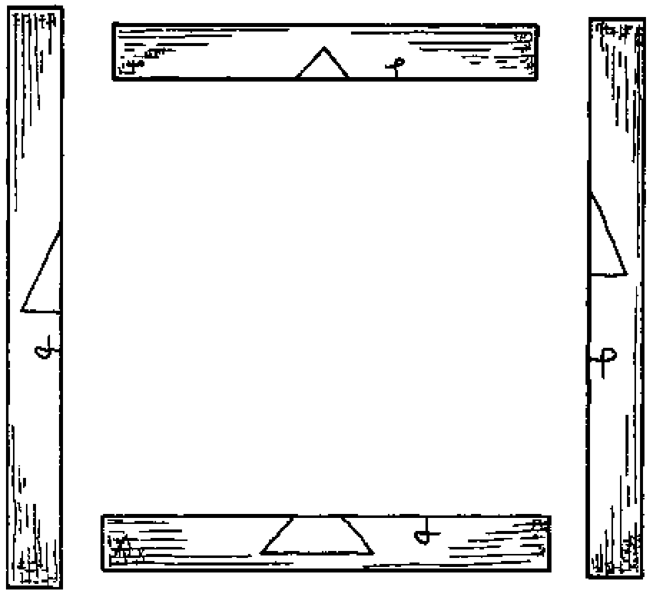

Fig. 1

- Take care that all surfaces which will be visible in the finished product are of good timber and without defects. Usually these will be the face sides and face edges. Always try to keep the face sides on one side, and the face edges all on the inside or all on the outside.

- Now put the inside edges of the horizontal members together, mark the length of the members and put the triangular mark as shown in Fig. 2. The triangle always should point up.

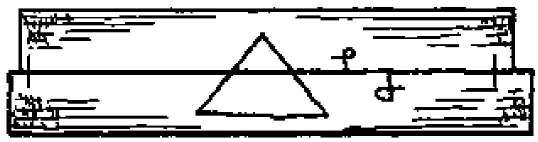

Fig. 2

- Now do the same thing for the vertical members. Put the inside edges together, mark the lengths and put the triangular sign, again pointing upwards (Fig. 3).

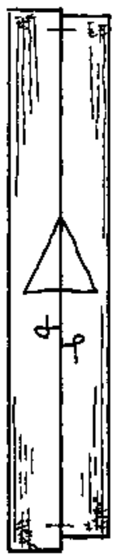

Fig. 3

- All further marking should be done using these sides as a reference.

NOTES:

Cutting list

After you design and make the drawing for a piece of work, you need to make a cutting list showing the length, width and thickness of all the parts. These will be the finished sizes. So that each part will be straight, true and smooth, we must begin with slightly bigger pieces to have an allowance for planing the sawn timber true.

The planing allowance for a board is:

3 mm extra in thickness
6 mm extra in width
12 mm extra in length

For square pieces the allowance is:

3 mm extra on each side
12 mm extra in length

An example is shown below of a cutting list for a simple box (Fig. 1). The list shows the parts of the box, the kind of wood, the number required of each part and the finished size of the part. In the last column we find the size of the timber that will be required when the planing allowance has been added.

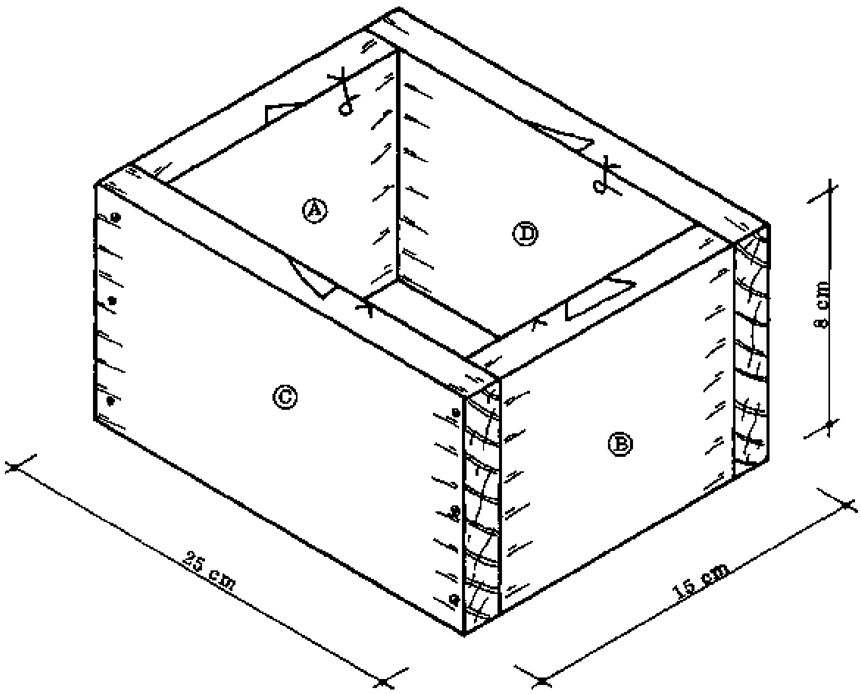

Fig. 1

NOTES:

Usually it is best to plan a project according to the sizes of timber you have available, subtracting the planing allowances first in order to prevent waste.

Cutting list:

			finished size (cm)			timber size (cm)		
part	wood	no.	L	W	T	L	W	T
A	Odum	1	10,6	8	2,2	11,8	8,6	2,5
B	Odum	1	10,6	8	2,2	11,8	8,6	2,5
C	Odum	1	25	8	2,2	26,2	8,6	2,5
D	Odum	1	25	8	2,2	26,2	8,6	2,5

When you are choosing timber for a piece, choose the best, straight boards for the long pieces. The crooked or defective boards can be used for the shorter pieces.

NOTES:

FASTENING WITH NAILS

Before you read this section, look up Nails in the Reference Book, Products section, page 207.

Driving nails

To start a nail, hold it steady between your thumb and fingers with one hand and strike one or two light blows with the hammer (Fig. 1).

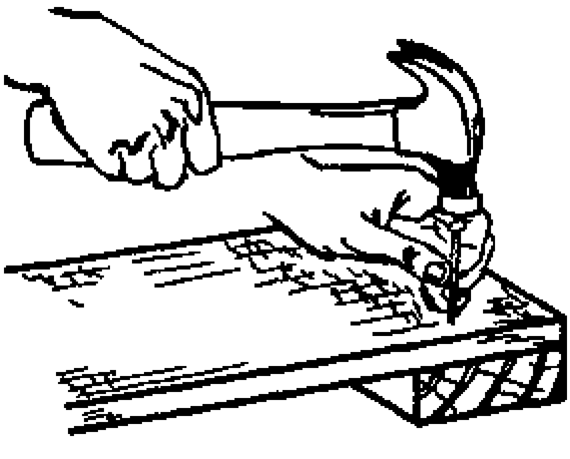

Fig. 1

After the nail is well started, drive it in with firm blows. Hold the handle of the hammer near the end and strike the nailhead straight.

When you drive a nail all the way in, be careful on the last blows not to hit the wood and leave a hammer mark on it.

Holding power

The holding power of the nail depends on the pressure of the wood fibres against the shank of the nail and also on the size of the nailhead (Fig. 2).

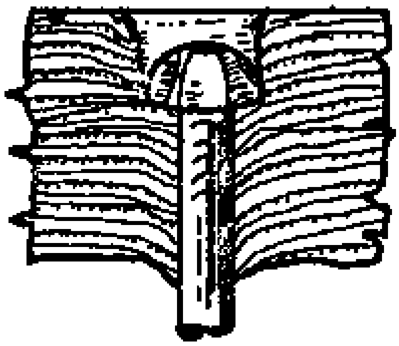

Fig. 2

Hard dry wood holds better than soft or wet wood. End grain doesn't hold nails very well. If the nail is driven across the fibres, the nail's length should be 2 1/2 times the thickness of the top piece (Fig. 3). If it is driven into end grain, the length should be 3 times the thickness of the top piece (Fig. 4).

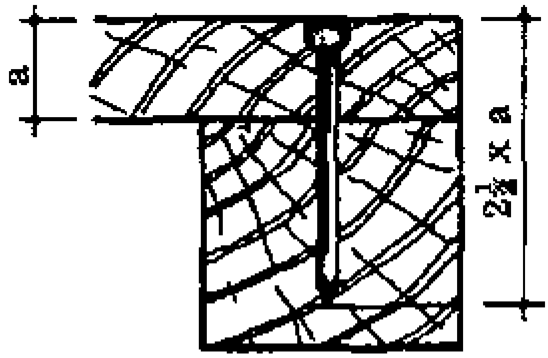

Fig. 3

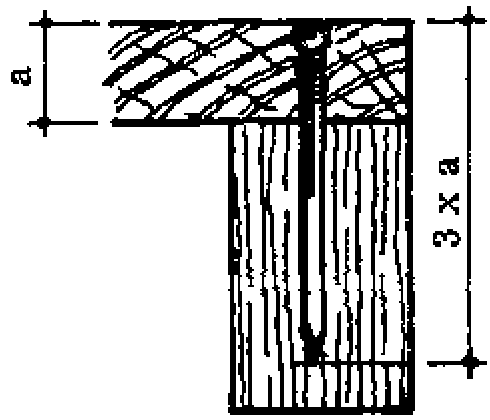

Fig. 4

The holding power of nails in end grain can be improved by dovetail nailing, which means the nails are inserted at slight angles (Fig. 5) instead of straight in (Fig. 6) which is the usual way.

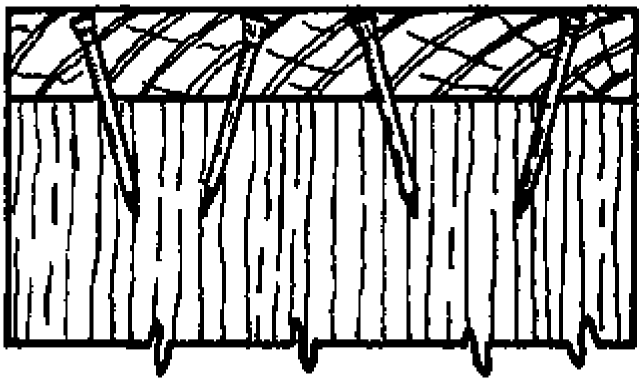

Fig. 5

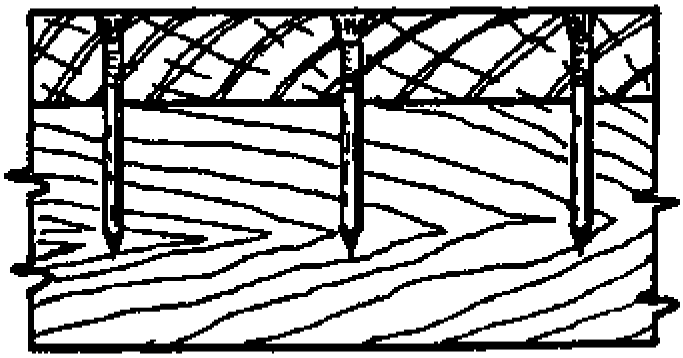

Fig. 6

If possible the nails should be inserted at right angles to the force that will be applied to the piece; so that any force tends to shear off the nail rather than pull it out.

The correct placing of the nails is important with respect to the strength of the finished piece.

NOTES:

__How to prevent splitting during nailing__

Nails can be staggered (inserted out of line) to prevent splitting along the fibres of the wood (Fig. 1).

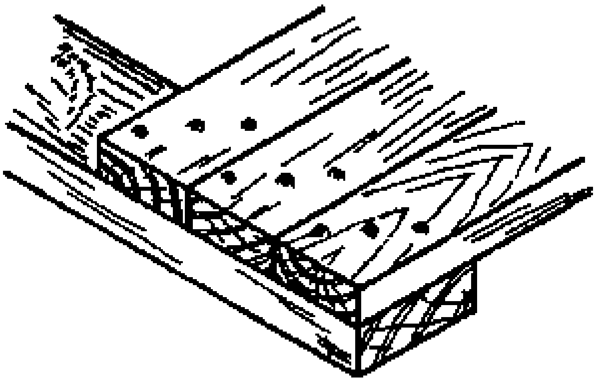

Fig. 1

Blunting the nail with one or two hammer blows on the tip also helps to prevent the nail from splitting the wood (Fig. 2).

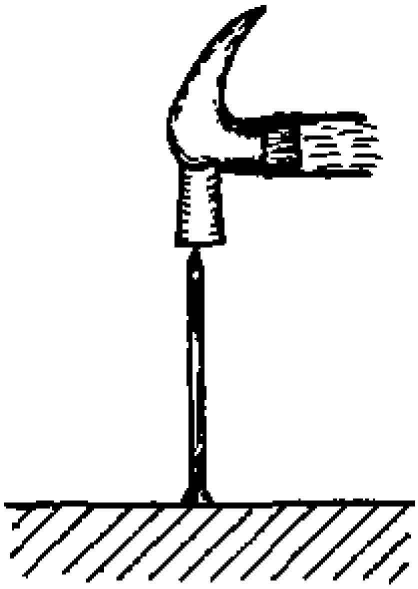

Fig. 2

If large nails are to be fixed, drill holes first to keep them from splitting the timber. The holes should be slightly smaller in diameter than the nails.

Finishing off

Lost head nails are punched (knocked below the surface of the wood) with a nail punch or a large blunt nail. The remaining hole can be filled with putty (Fig. 3).

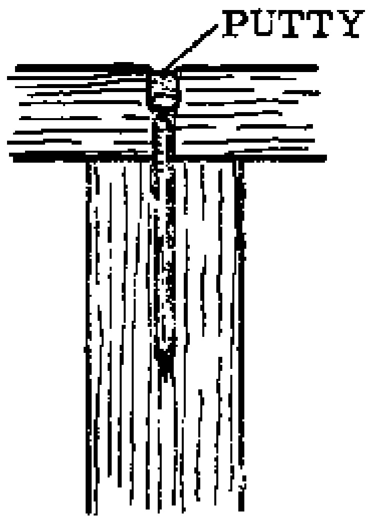

Fig. 3

When the sharp points of nails come all the way through the timber and out on the other side, they are clenched; that is the tips are bent over and flattened against the wood, out of the way. There are two ways of doing this:

- Knock the tip flat and punch it into the wood with a nail punch (Fig. 4).

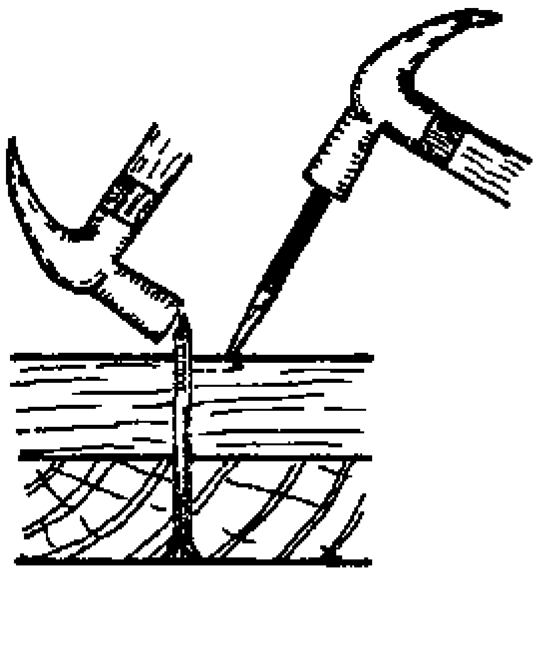

Fig. 4

- Bend the point at a right angle first, and then knock it back into the wood (Fig. 5; a, b, & c). This is done where the nail projects more than 1 cm.

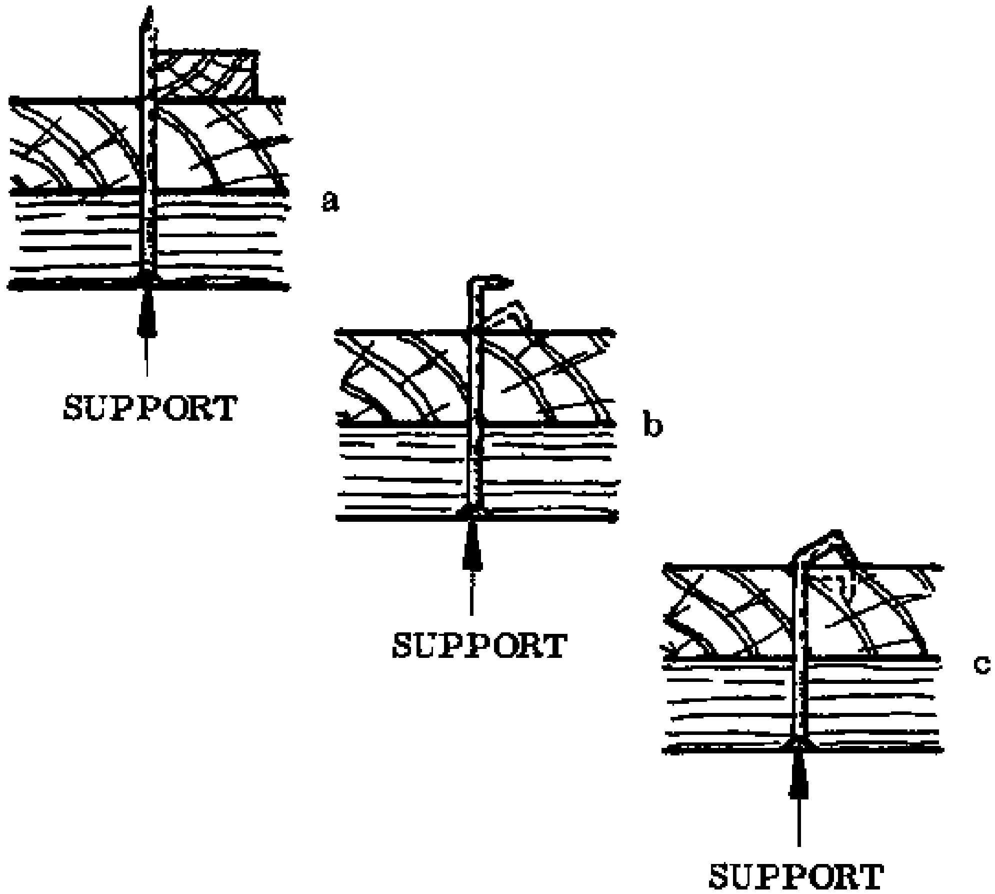

Fig. 5

The head of the nail should be supported during clenching to keep it from being pushed out again.

Bent nails can be straightened if you tighten one end in a vice and support the other end with a hammer while knocking out the bent part with another hammer (Fig. 6).

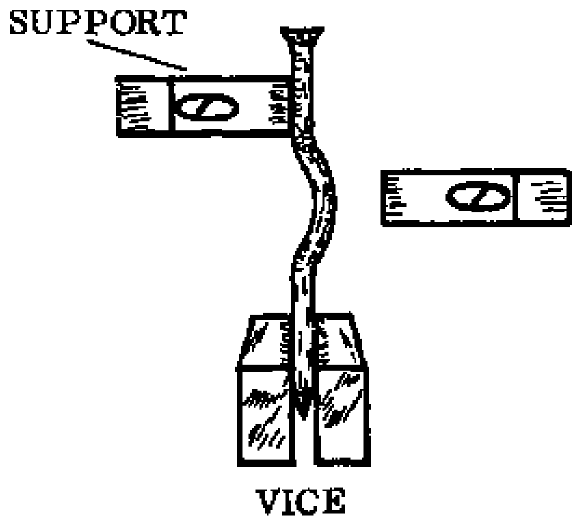

Fig. 6

NOTES:

FASTENING WITH SCREWS

Before you read this section, look up screws in the Reference Book, page 209; screwdrivers on page 77; and maintenance of screwdrivers on page 103.

Holding power

The holding power of a screw depends on how the thread embeds in the fibres, the length of the screw and the strength of the head which holds the top piece.

When a screw is driven across the grain, the screw's length should be about twice the thickness of the top piece (Fig. 1).

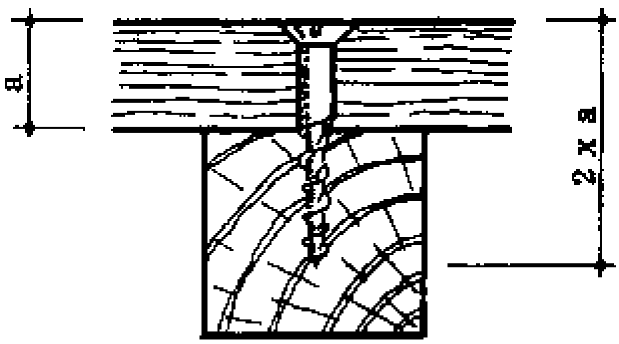

Fig. 1

Screws driven into the end grain should be longer, about 3 times the thickness of the top piece (Fig. 2).

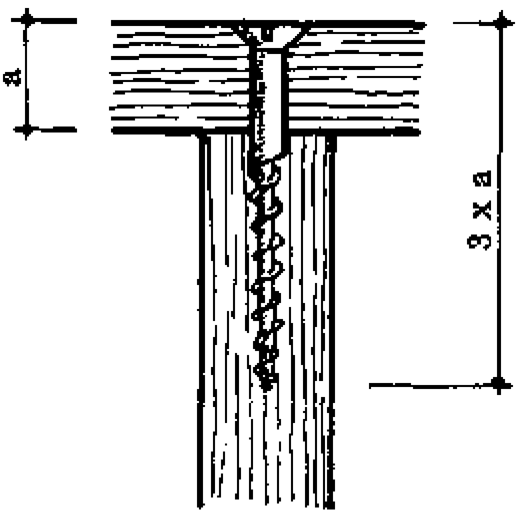

Fig. 2

Driving screws in soft wood

- Bore a hole in the top piece with the same diameter as the shank of the screw (Fig. 3a). The bottom piece may be punched with a large nail or awl (Reference Book, page 73).

- Countersink if necessary (Fig. 3b).

- Drive the screw (Fig. 3c).

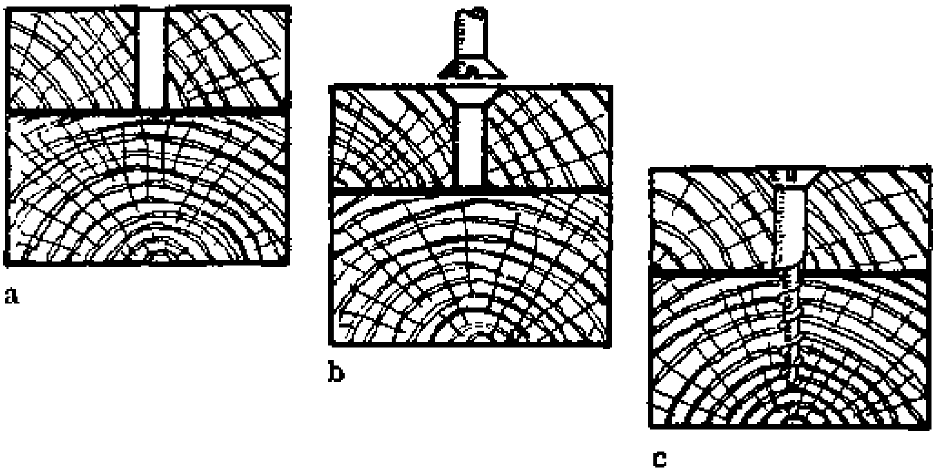

Fig. 3

Driving screws in hard wood

- Bore a hole in the top piece with the same diameter as the shank of the screw (Fig. 4a).

- Bore a hole in the bottom piece with the same diameter as the core of the screw (Fig. 4b).

- Countersink if necessary and drive the screw (Figs. 4c & 4d).

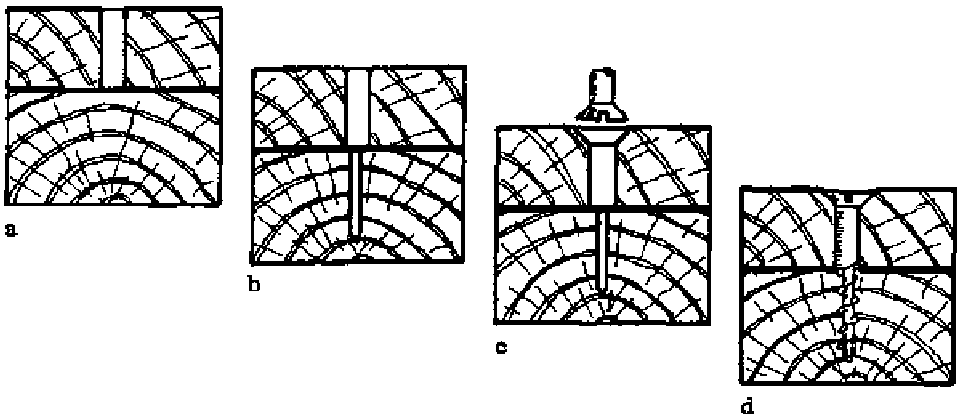

Fig. 4

Use a screwdriver with the correct tip only. If the screw turns too hard, the hole may be too small or not deep enough. Remove the screw and find out what the problem is so it can be corrected, otherwise the screw may break or split the board.

- Turn the screw down until the head is just seated. Overturning weakens the holding power and may break the screw.

- To make driving easier and to protect against rust, a bit of soap or oil may be put on the tip of the screw.

ANGLE JOINTS

Angle joints are joints where the sides of the pieces (the wide surfaces) meet at right angles to each other. Angle joints are used for box-like constructions such as small boxes, tool boxes etc. For an example of a box using angle joints, see the illustration for the Cutting List lesson, on page 89. In this chapter we will consider the most common types of angle joints and their construction.

Nailed butt joint

The simplest angle joint is the nailed butt joint. The end of one piece of wood is cut square, then butted against the face of the other piece. It is held in place with nails, or both nails and glue (Fig. 1).

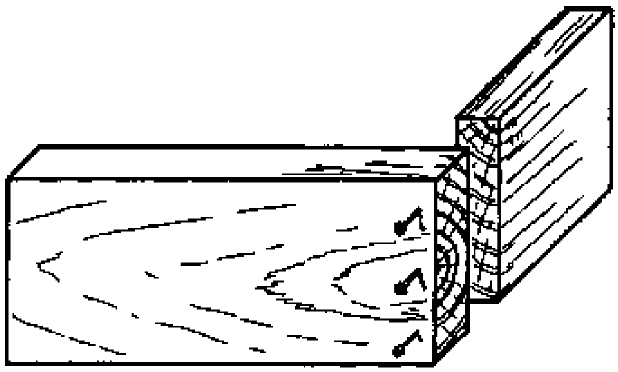

Fig. 1

Plain mitred joint

The ends of the pieces are mitred (cut at 45 degrees) across the thickness. The mitred ends are butted together and held in place with glue and nails (Fig. 2). This is a weak type of joint although it is stronger than the butt joint because it is nailed from two sides. Its advantage is that the end grain is not exposed to damage from water or insects, and it has a neater appearance.

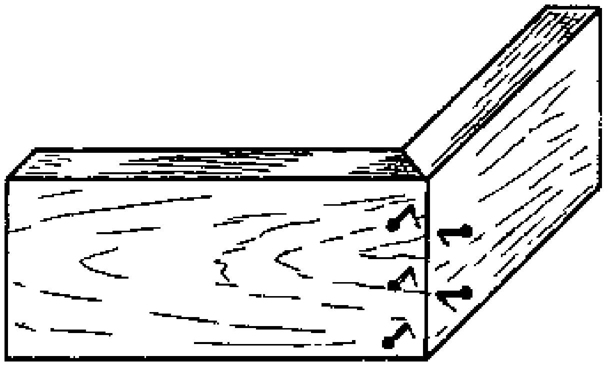

Fig. 2

Rebated butt joint

The end of one piece fits into a rebate at the end of the other piece. This joint is strong because two surfaces are available for nailing, and because the shoulder of the rebate supports and helps to hold the other piece (Fig. 3).

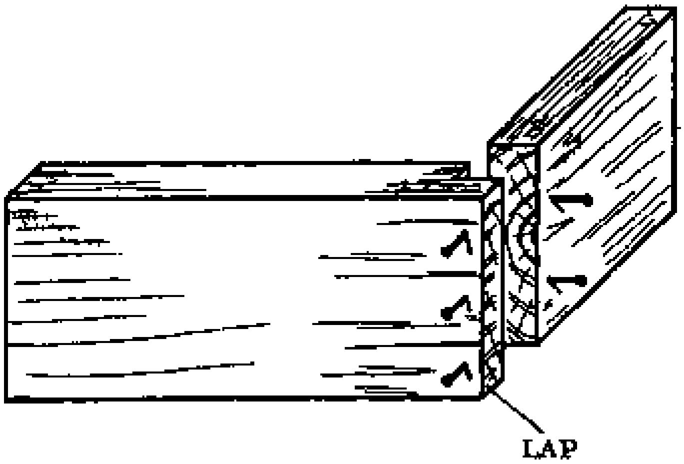

Fig. 3

The lap is the section of wood which is left projecting after the rebate is cut (Fig. 3). The lap is usually one-half of the thickness of the board. This lap will be important later when we are figuring out the length of our pieces for making a box.

The rebated butt joint is simple to construct. In the following sequence of operations we will describe how to make a simple box with this joint while also practising some techniques discussed earlier, like making a cutting list and preparing timber to size.

The tools required here will be the same ones we used for the preparation of timber; with the additions of a firmer chisel, a smoothing plane, and a backsaw. Make sure you know what these tools are and how to use them before you go on.

Sequence of operations for constructing a box with this joint

Step 1. Preparation of timber

- Make a cutting list. The end pieces can be cut to the required length, that is the outside width of the box minus the width of the two laps. Allow 3 mm extra at each end of the side pieces, for planing off after assembly (Fig. 2).

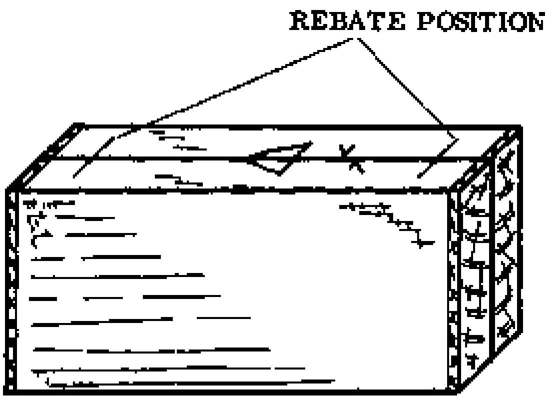

Fig. 2

- Prepare the pieces (see Preparation of Timber section, pages 84 to 86).

Step 2. Marking out

- Mark the sides and ends as shown in Fig. 1, on the face edges (Marking of frames, page 88). All further marking will be done from the sides with these marks.

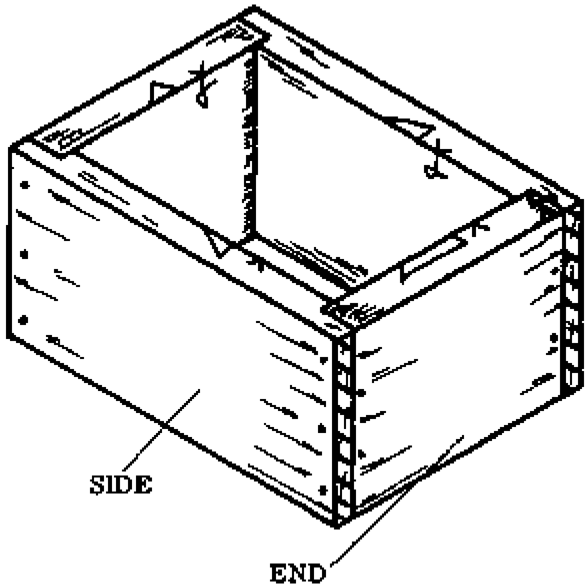

Fig. 1

- Place the two sides together and mark the position of the rebates, squaring with the try square (Fig. 2).

- Mark the shoulder lines of the rebate on the inside face of the piece, using the try square (Fig. 3).

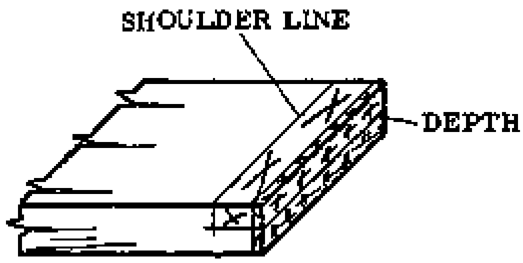

Fig. 3

- Mark the depth of the rebate on the end grain and the edge, using a marking gauge (Fig. 3). Show the waste with crosses.

Step 3. Cutting the rebate

- Saw the shoulders down to the gauge line. Cut on the waste side of the line. If the piece is very wide, nail or clamp a guide over the line to guide the saw. Use a backsaw (Fig. 4).

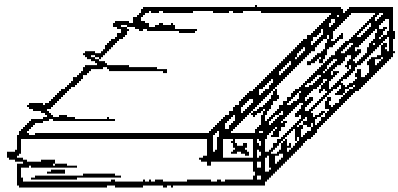

Fig. 4

- Remove the waste carefully to the gauge line with a firmer chisel (Fig. 5). Find out the direction of the grain by chiselling out small pieces first, so that you don't accidentally chisel too deep.

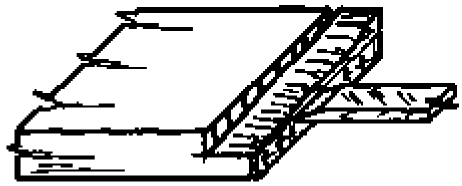

Fig. 5

Step 4. Assembling

- Clean up the inside faces with a smoothing plane (Fig. 6).

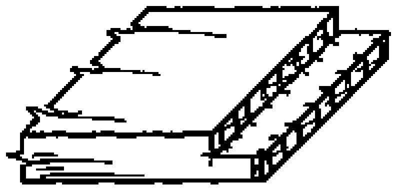

Fig. 6

- Assemble the box with glue and nails.

- Measure the diagonals to check for squareness.

- Clean up the face and bottom edges with a smoothing plane.

- Plane off the waste from the sides with the smoothing plane. Prevent splintering by working inwards from the ends (Fig. 7).

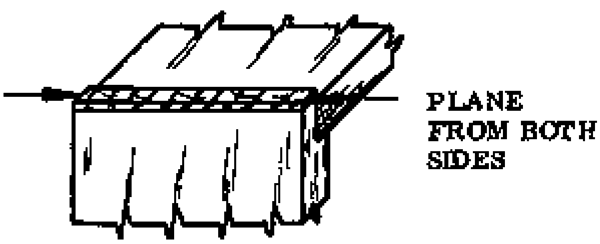

Fig. 7

NOTES:

Housed joint

These joints are another type of angle joint, also used in box-like constructions.

Housing consists of sinking the end of one piece into a trench which is cut into the face of another piece (Fig. 1).

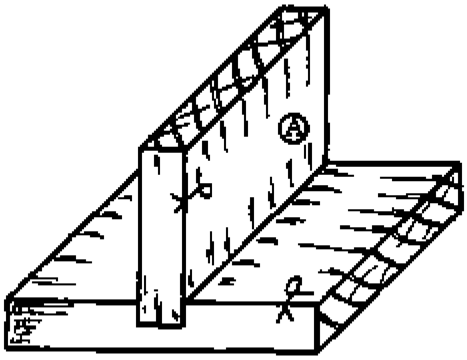

Fig. 1

The tools required for making this type of joint are the same ones used to make the rebated butt joint.

Sequence of operations for constructing the joint

Step 1. Preparation of the timber

- Make a cutting list.

- Prepare the timber (see Preparation of Timber section).

Step 2. Marking out

- Mark one edge of the trench with a try square and the other edge by using piece A as a guide (Fig. 2). (Smooth piece A before using it to mark the trench).

- Gauge the depth of the trench at each edge (Fig. 3).

- Show the waste with small crosses (Fig. 3).

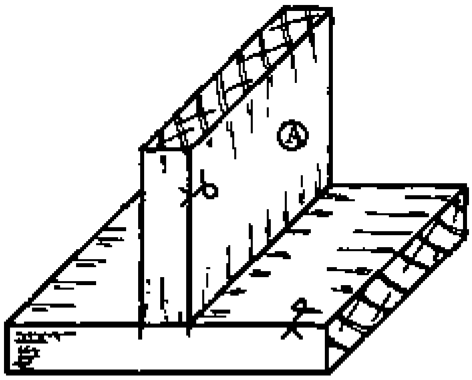

Fig. 2

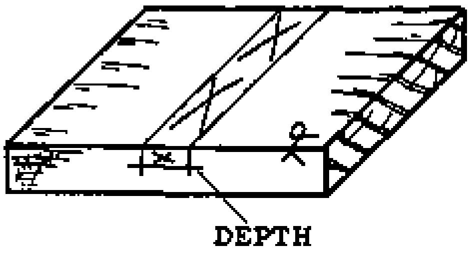

Fig. 3

Step 3. Cutting the trench

- Saw the sides of the trench (on the waste side of the lines) down to the gauge lines (Fig. 4).

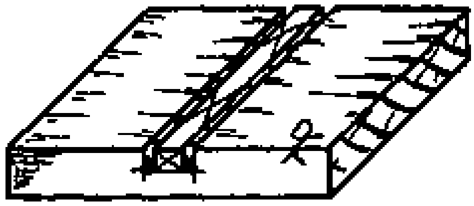

Fig. 4

- Chisel out the waste from the trench (Fig. 5).

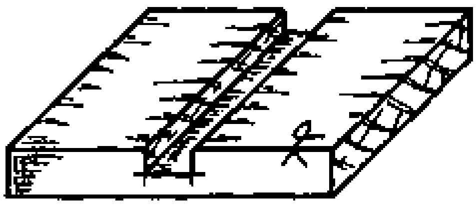

Fig. 5

Step 5. Assembling

- Assemble the two parts with nails and glue.

- Clean up the edges with a smoothing plane.

NOTES:

Common mortice and tenon joint for box-like constructions

This is one of the commonest and strongest joints. The two parts are (Fig. 1): the tenon (B) which is a projection on the end of one part and the mortice (A), the hole in the other part into which the tenon fits. The tenon is usually 1/3rd of the width of the board.

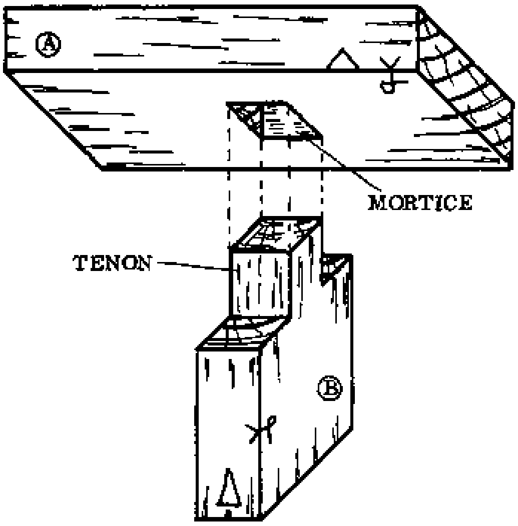

Fig. 1

The tools we need are ones we have discussed before, plus a mortice chisel, a brace and drilling bits.

Sequence of operations for constructing the joint

Step 1. Preparation of timber

- Make a cutting list.

- Prepare the timber to the required sizes. (In the following steps, the piece with the mortice is “piece A” and the one with the tenon is “piece B”.)

Step 2. Marking out

- Mark out the length of the tenon on piece B. Allow 3 mm waste in the length and make square lines all around with a try square and pencil (Fig. 2).

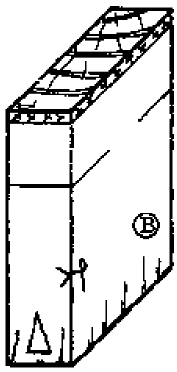

Fig. 2

- Take piece A and mark out the position of the mortice on the face edge and make square lines on the edges on both sides with the try square (Fig. 3).

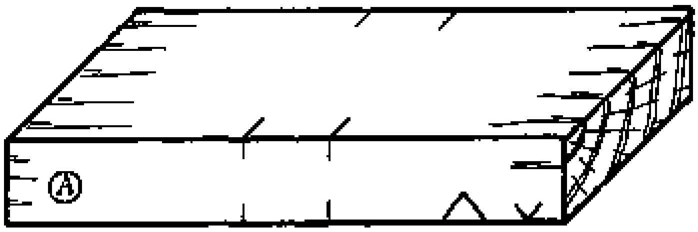

Fig. 3

- Set the marking gauge to the width of the tenon and mark the lines around piece B at the width. Mark the waste with small crosses (Fig. 4).

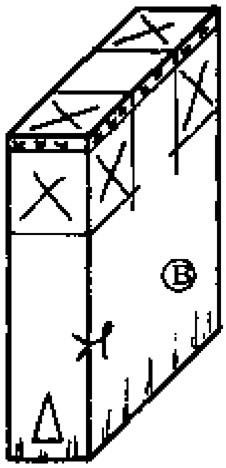

Fig. 4

- Use the same setting to mark both faces of piece A and use a try square and (already smoothed) piece B to mark the remaining two lines for the width of the mortice (Fig. 5). Mark the waste with a small cross.

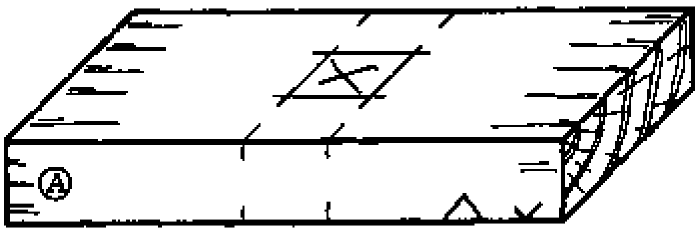

Fig. 5

If the marking gauge has two pins, set each at its correct measurement and mark both lines at once. If not, mark with the first setting on all the members, then change the setting and mark the other measurement on all the members.

- Always mark from the face edge. Check the marking by setting piece B against the marks on piece A to see if they fit. Piece B must be smoothed first.

NOTES:

Step 3. Cutting the mortice

- Bore out most of the waste, using a brace and bit (Fig. 6). Clamp a piece of wood to the underside to prevent splintering and damage to the bench.

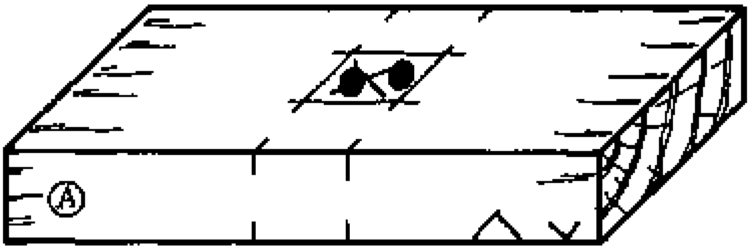

Fig. 6

- Chop out the remaining waste with a mortice chisel, chiselling halfway through from both sides. Leave about 2 mm extra waste on all sides to prevent damage to the sides. Keep the cutting edge of the chisel across the grain.

- Carefully chop out the rest of the mortice up to the lines (Fig. 7). Keep the bevel of the chisel towards the inside of the mortice. Do not use the mallet.

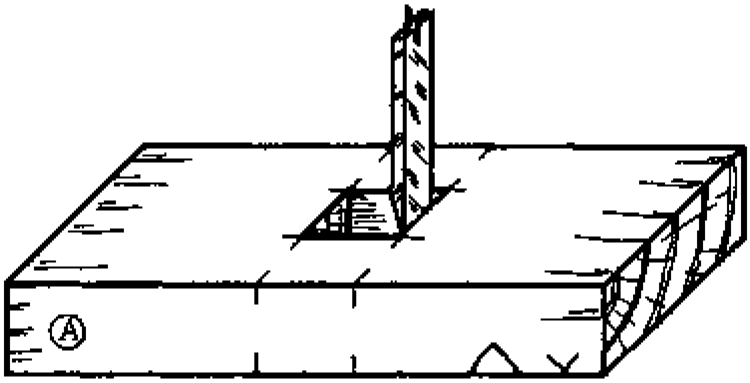

Fig. 7

Step 4. Cutting the tenon

- Rip the sides of the tenon, sawing on the waste side of the line (Fig. 8). Cut in stages as shown in (Fig. 11, a, b, c, & d).

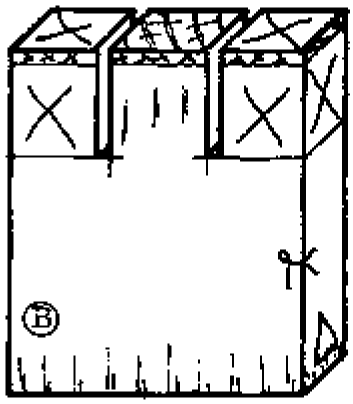

Fig. 8

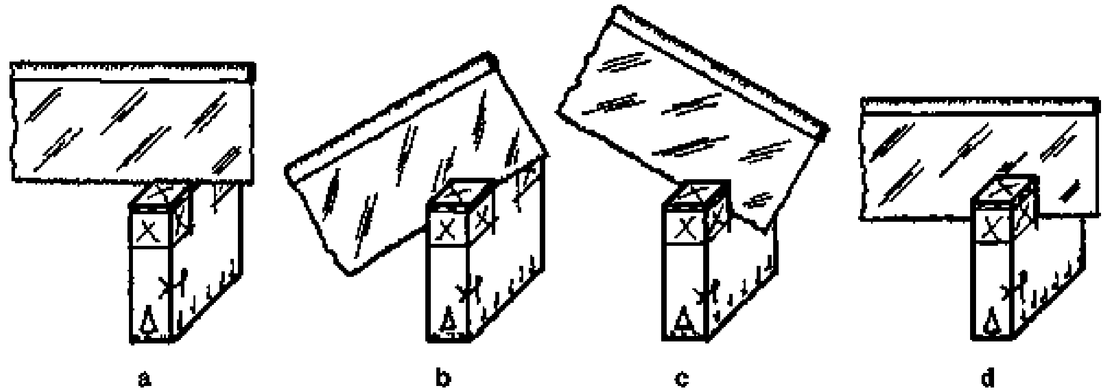

Fig. 11

- Carefully saw the shoulders, making sure to hold the saw straight. Keep on the waste side of the line (Figs. 9 & 10).

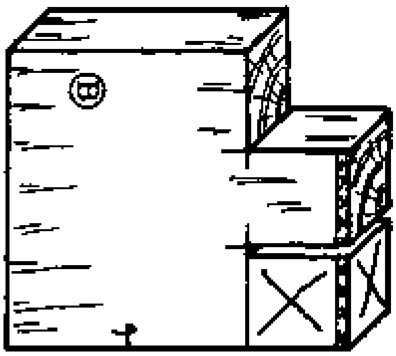

Fig. 9

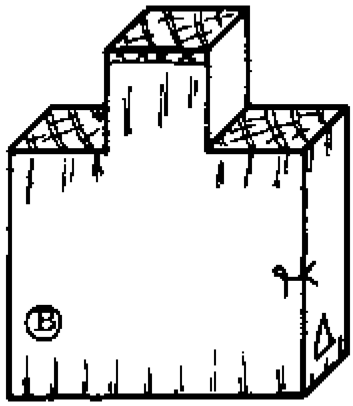

Fig. 10

Step 5. Assembling the joint

- Check the fit of the members. The tenon should fit tightly into the mortice without splitting the morticed piece. There should be no gap between the shoulders of the tenon and the morticed member. Don’t force the members together. If they don’t fit, find the problem and correct it.

- Clean up the inside of the joint where it can’t be reached after assembly with a smoothing plane. (Remember that the tenon should be smoothed before using it to mark out.)

- Assemble the joint.

- Plane off the waste end of the tenon, clean up all sides and edges with the smoothing plane.

NOTES:

__Cornerlocked joint__

The cornerlocked joint is similar to the mortice and tenon joint. It is an angle joint with a series of tenons on one member which correspond to slots on the other member (Fig. 1). The resulting joint is strong because it can be nailed from two sides, and the interlocking tenons and slots also help hold the pieces together.

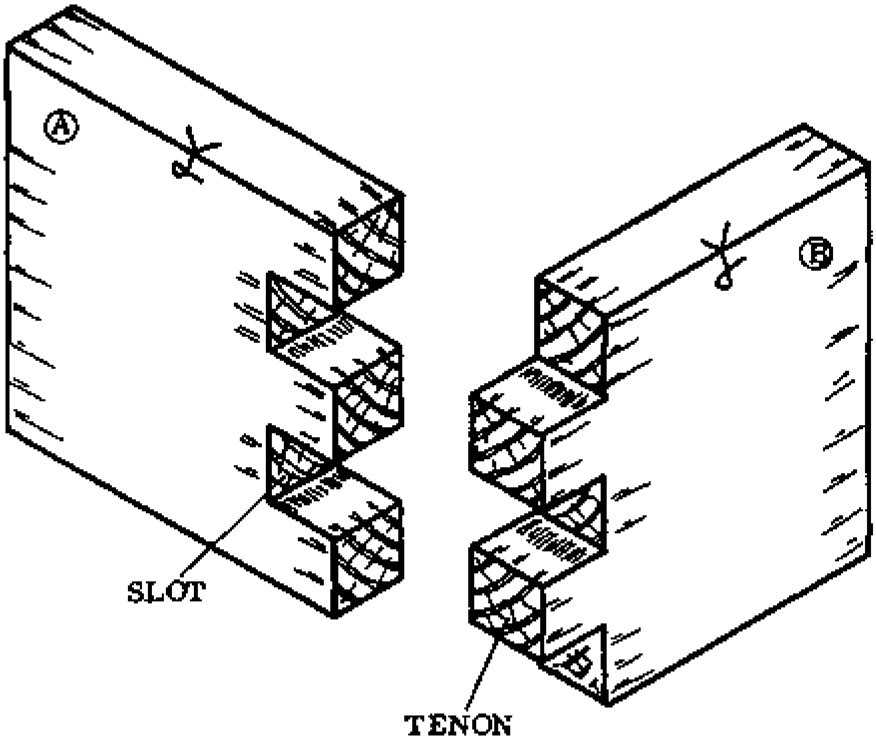

Fig. 1

The tools required to make this joint are the same ones used for the mortice and tenon joint.

__Sequence of operations for constructing the joint__

Step 1. Preparation of the timber

- Make a cutting list.

- Prepare the timber to the required sizes. (In the following steps, the member with the slots is piece “A” and the one which has the tenons is piece “B”.)

- If the members are to be used for a box where the external appearance is important, the face sides should be outside.

- In most cases the face edges are kept upwards.

Step 2. Marking out

- Mark out the position of the tenons and slots by gauging or squaring lines at the corners on the ends of the pieces: on piece A the depth should be equal to the thickness of piece B (Fig. 2); while on piece B the depth should be equal to the thickness of piece A (Fig. 3). Allow 2 mm waste for cleaning up after assembly.

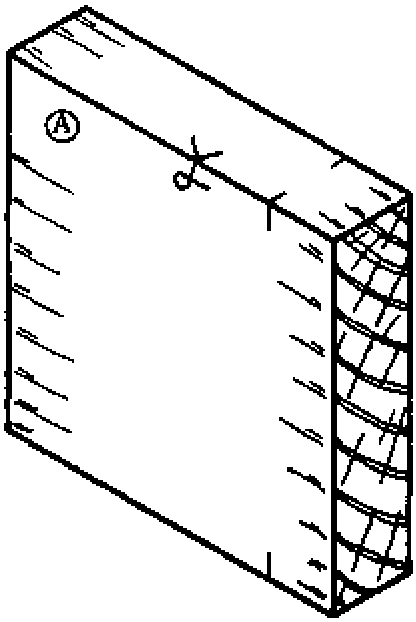

Fig. 2

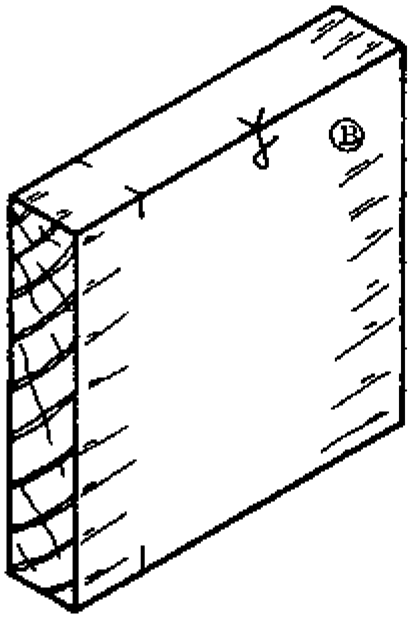

Fig. 3

- Mark out the shape of the tenons on piece B. Keep all tenons the same size (Fig. 4).

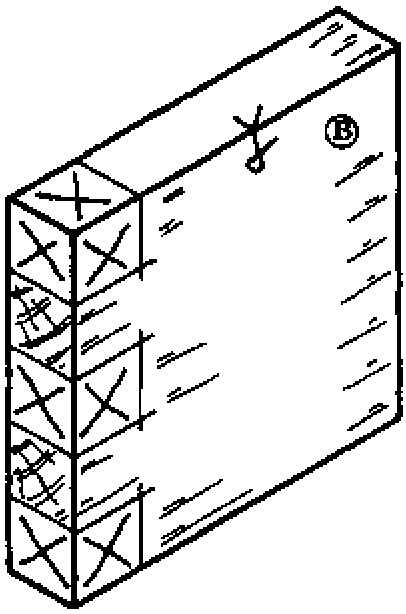

Fig. 4

- Immediately mark the waste between the tenons with crosses (Fig. 4).

NOTES:

Step 3. Cutting the tenons

- Rip the sides of the tenons down to the gauge line (Fig. 5). Saw on the waste side of the line.

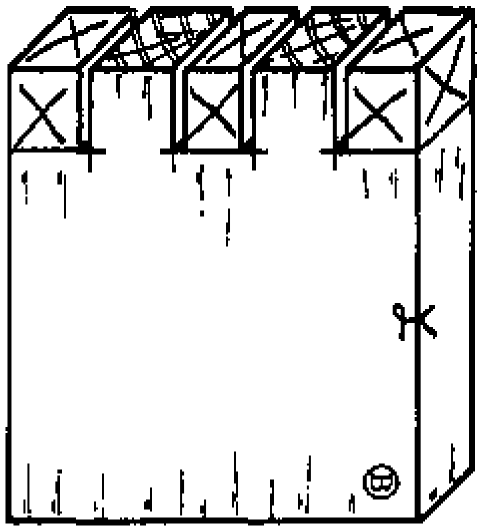

Fig. 5

- Chop out the waste by chiselling alternately vertically and then at an angle, making “V” cuts halfway through from each side (Figs. 6, 7, & 8).

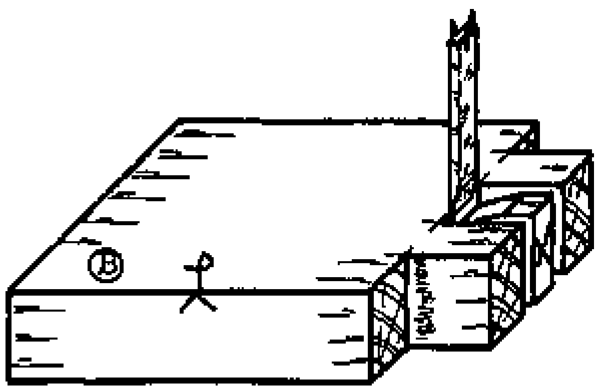

Fig. 6

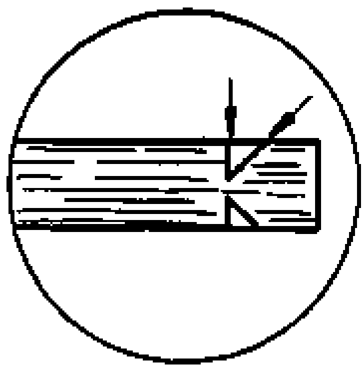

Fig. 7

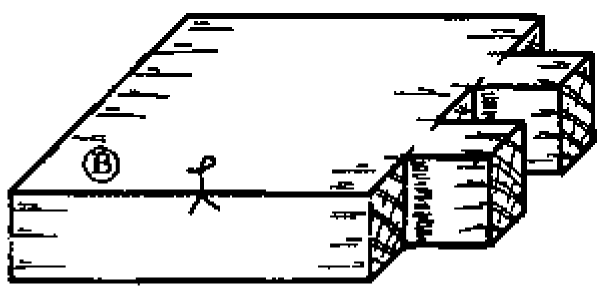

Fig. 8

Step 4. Cutting the slots

- Place piece B (with the tenons) over the end of piece A, with the face side to wards the outside as indicated in Fig. 9.

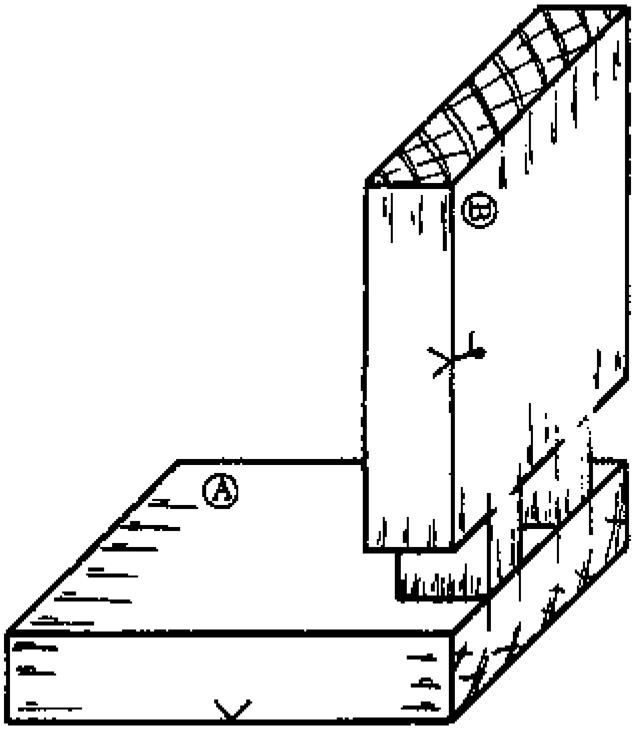

Fig. 9

- Mark the shape of the tenons onto piece A with a pencil (Fig. 9).

- Square the sides of the slots down both sides (Fig. 10).

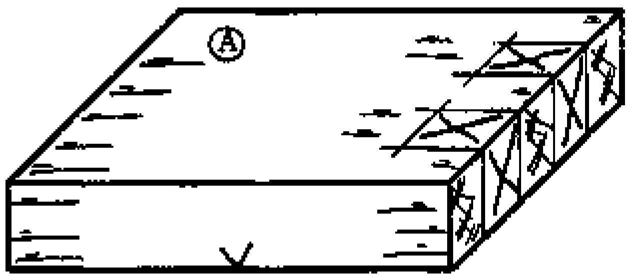

Fig. 10

- Mark the waste with small crosses (Fig. 10).

- Rip the sides of the slots, sawing on the waste side of the line.

- Chop out the waste from the slots, chiselling from both sides as explained in the previous step (Fig. 11).

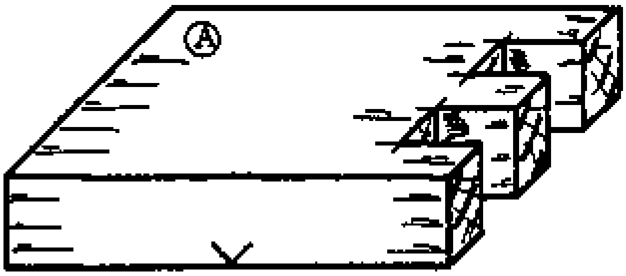

Fig. 11

Step 5. Assembling the joint

- Clean up the inside faces of the joint.

- Assemble the joint with glue and nails.

- When the glue is dry, clean up the waste of the tenons and slots with a smoothing plane. Make sure the nails are punched well below the surface to prevent damage to the sole of the plane.

- Clean up the outside faces and edges with a smoothing plane.

NOTES:

FRAMING JOINTS

Framing joints are those used in frame-like constructions. The members are usually constructed with their edges at right angles to each other; in contrast to the angle joints used in box-like constructions, where it is the sides which form the right angle (previous pages).

Halved joints

Halved joints are one type of framing joint. The name is applied to joints where the pieces of timber which meet or cross each other are halved; that is, at the place where they cross, each piece is 1/2 the thickness of the rest of the piece. The result is that in the assembled joint, the surfaces of both pieces are flush.

Halved joints are used for constructing simple frames.

In Rural Building, we deal with four different kinds of halved joints. Here we will cover the description and construction of the "tee-halved joint", since the construction of the other joints follows much the same procedures.

The tee-halved joint consists of a pin (a) on the end of one piece which fits into a socket (b) in the other piece (Fig. 1).

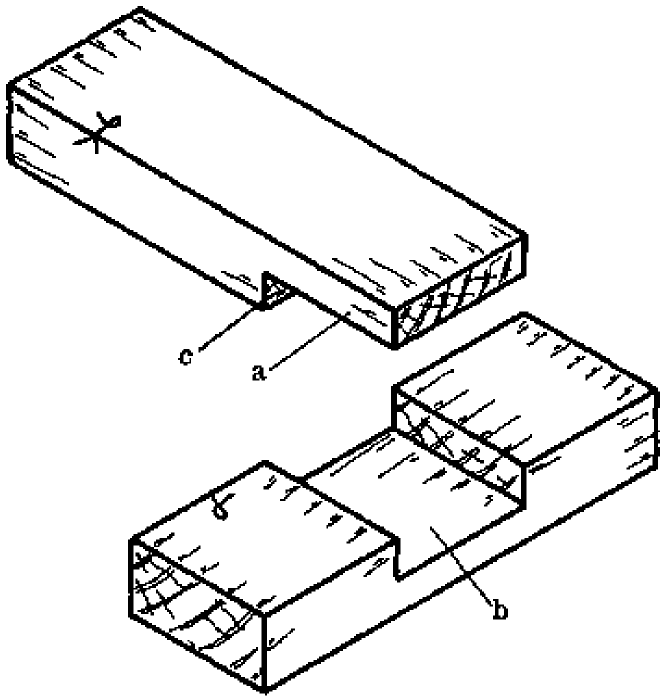

Fig. 1

The pin is half the thickness of the timber, and the depth of the socket equals the thickness of the pin. The shoulder of the pin (c) fits against the face edge of the socket (Fig. 1).

The tools required to make this joint are the same ones we used to make the mortice and tenon joint in the last chapter.

Sequence of operations for constructing the joint

Step 1. Preparation of timber

- Make a cutting list.

- Prepare the pieces to the required size.

Step 2. Marking out

- Mark the length of the pin by placing the socket piece on top of it and marking at the width. A small amount of waste can be left on the end of the pin, to be planed off after the joint is assembled.

- Make lines square at the shoulder of the pin, drawing them across the side and halfway down the edges, with a try square and pencil (Fig. 2). Mark the waste.

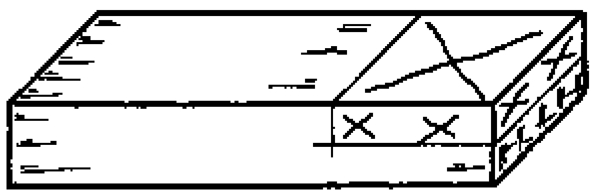

Fig. 2

- Mark the position of the socket, using the piece with the pin as a guide. Smooth the pin before using it to mark the socket.

- Square the lines across the side and halfway down the edges with a try square. Mark the waste (Fig. 3, previous page).

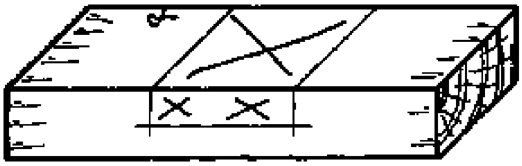

Fig. 3

- Gauge the thickness of the pin around its edges and mark the waste (Fig. 2, previous page).

- With the same setting, gauge the depth of the socket on both edges and mark the waste (Fig. 3, previous page).

- Both pin and socket should be gauged from the face side.

- Place the pin over the position of the socket and check the fitting (Fig. 4, previous page).

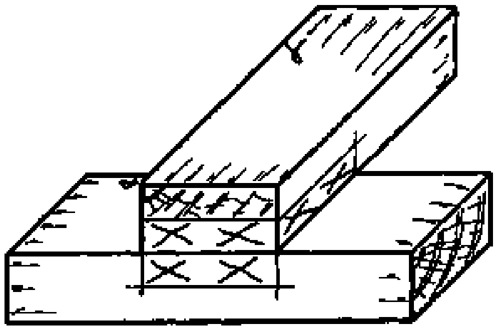

Fig. 4

Step 3. Cutting the pin

- Rip the thickness of the pin. Cut in stages as shown in Fig. 5, a through d. Take care to keep on the waste side of the line.

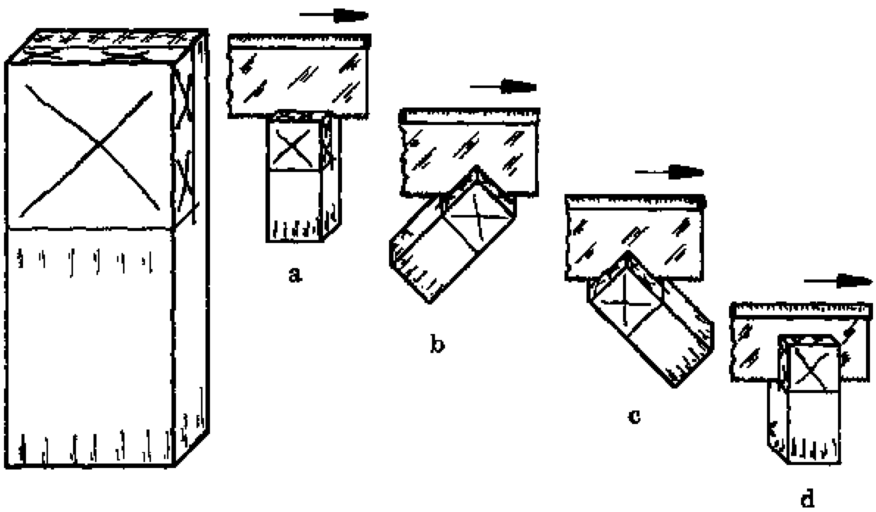

Fig. 5

- Saw the shoulder of the pin, keeping on the waste side of the line (Fig. 6).

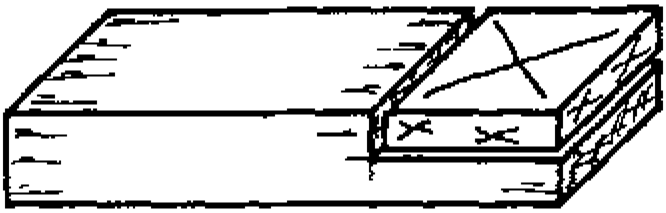

Fig. 6

Step 4. Cutting the socket

- Saw down to the gauge lines of the socket, keeping on the waste side of the lines (Fig. 7).

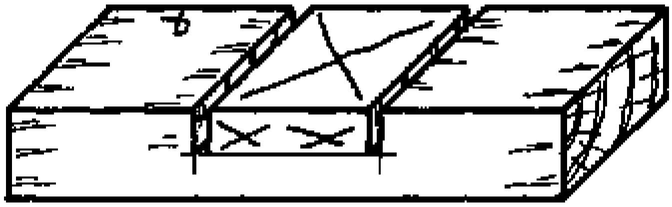

Fig. 7

- Chisel out the waste, chiselling halfway through from both edges (Figs. 8 & 9).

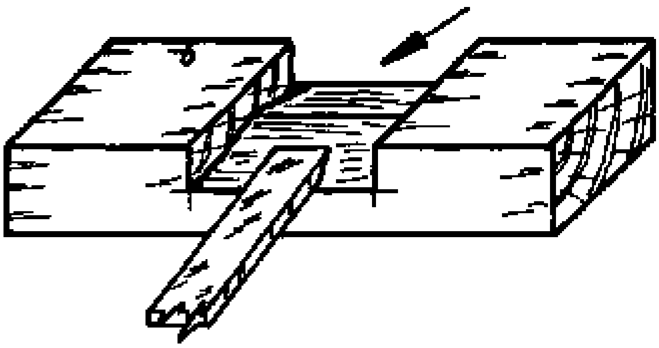

Fig. 8

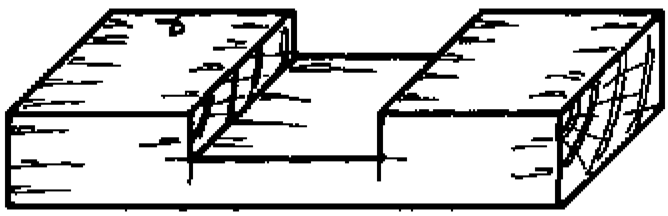

Fig. 9

- Test the flatness of the socket with the blade of the try square.

Step 5. Assembling the joint

- Clean up the inside edges with a smoothing plane.

- Assemble the joint with glue and nails.

- When the joint is dry, plane off the waste of the pin.

- Clean up all sides and edges with the smoothing plane.

NOTES:

Corner-halved joint

Another halved joint is the corner-halved joint (Fig. 1). It is used where the pieces meet at their ends to form a corner.

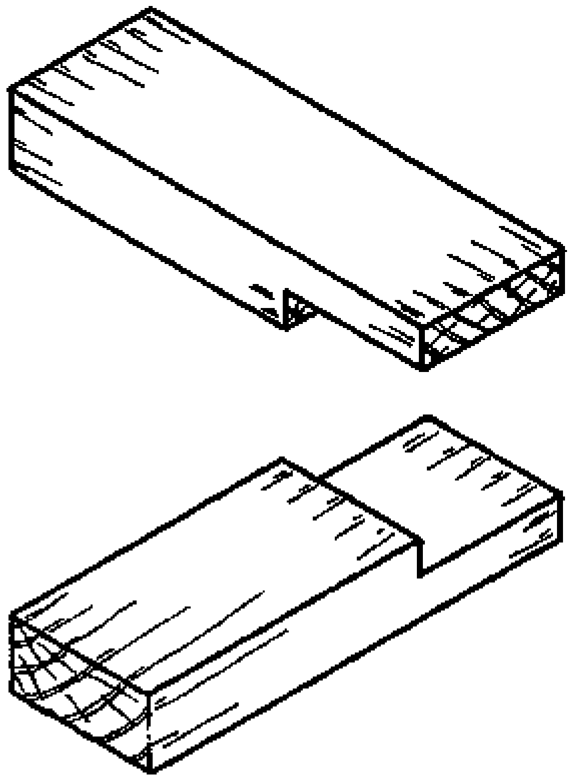

Fig. 1

The sequence of operations to construct this joint is similar to the one for the tee-halved joint, except that instead of a pin and a socket, two pins have to be marked and cut.

Cross-halved joint

The third halved joint we deal with is the cross-halved joint (Fig. 2). It is used where two members cross each other.

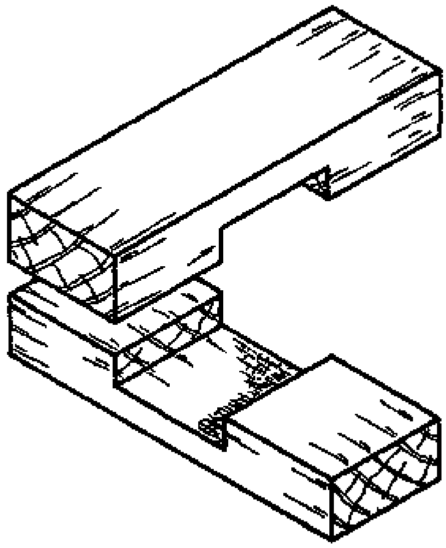

Fig. 2

The sequence of operations to construct this joint is similar to the tee-halved joint, but instead of a pin and a socket, two sockets have to be marked and cut.

Stopped tee-halved joint

In this joint the socket is stopped away from the edge and the pin is cut short, so that in the assembled joint the end grain of the piece is not seen (Fig. 3).

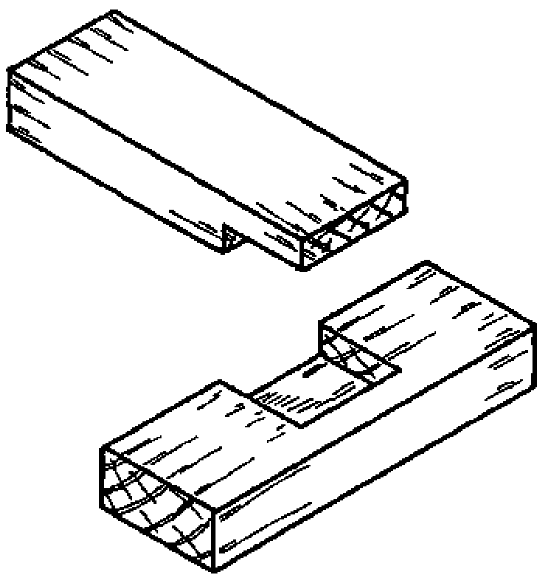

Fig. 3

Otherwise, the same sequence is followed as for the tee-halved joint.

NOTES:

__Common mortice and tenon joint for frame-like constructions__

One of the most common and strongest forms of framing joint is the mortice and tenon joint (Fig. 1).

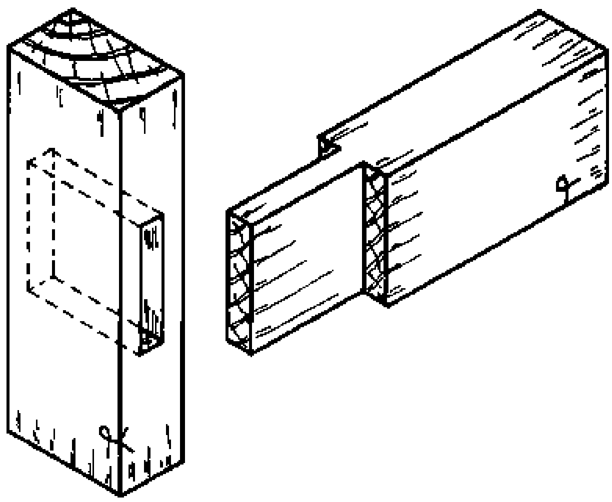

Fig. 1

The sequence of operations to construct a mortice and tenon joint for frame-like constructions is almost the same as for box-like constructions. Of the four types of mortice and tenon joints mentioned in this chapter, we will only go into detail about the construction of one of them, the common mortice and tenon. No new tools will be needed.

__Sequence of operations for constructing the joint__

Step 1. Preparation of timber

- Make a cutting list.

- Prepare the timber.

Step 2. Marking out

- Mark out the position of the mortice and square the lines across the face side and edges, using a try square and pencil (Fig. 2).

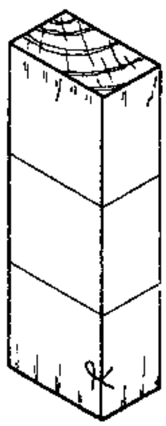

Fig. 2

- Mark out the length of the tenon on the other member. Allow 3 mm waste on the end.

- Square lines all around (Fig. 3).

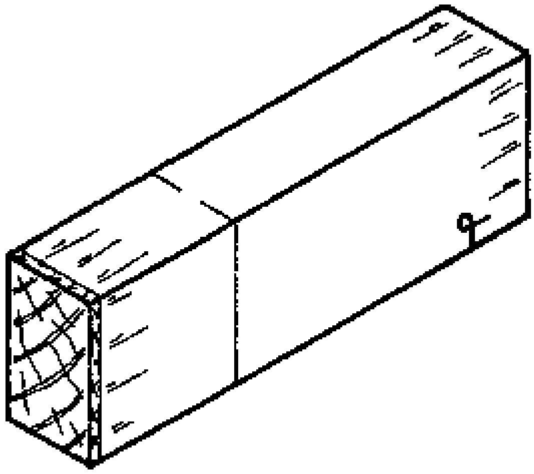

Fig. 3

- Set a marking gauge to the size of the tenon (one-third of the width of the piece) and mark around the end of the tenon (Fig. 5). Mark the waste.

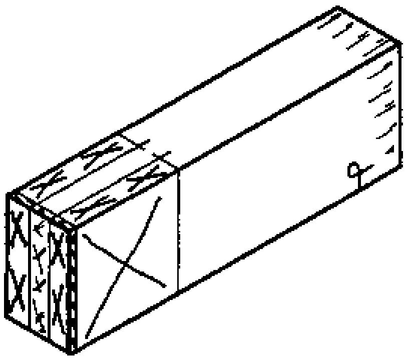

Fig. 5

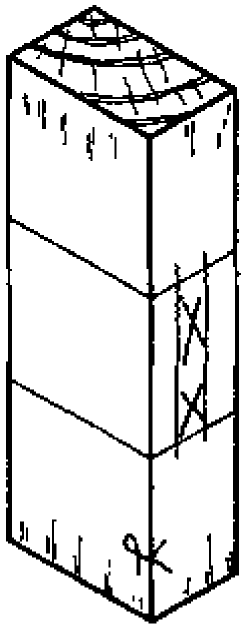

Fig. 4

- Use the same setting to mark both edges of the mortice and mark the waste (Fig. 4).

- Do all marking from the face side.

- Check the marking, using the pieces as a guide by placing them over the marks (compare this sequence to the mortice and tenon for box-like constructions, page 104).

NOTES:

Step 3. Cutting the mortice

- Most of the waste may be bored out (Fig. 6). Bore halfway through from both edges. Make sure you keep the brace at a 90 degree angle to the edge.

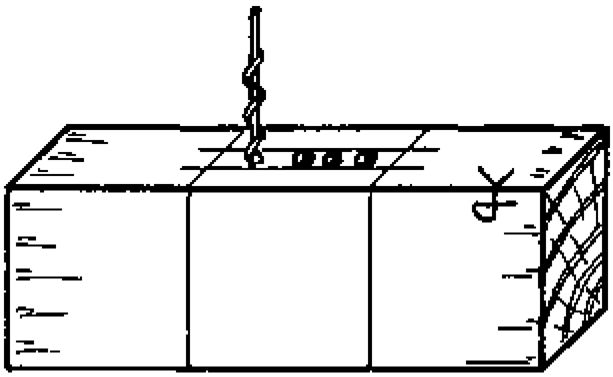

Fig. 6

- Chop out the remaining waste, chiselling halfway through from both edges. Leave about 2 mm extra to prevent damage to the sides of the mortice during chiselling (Fig. 7).

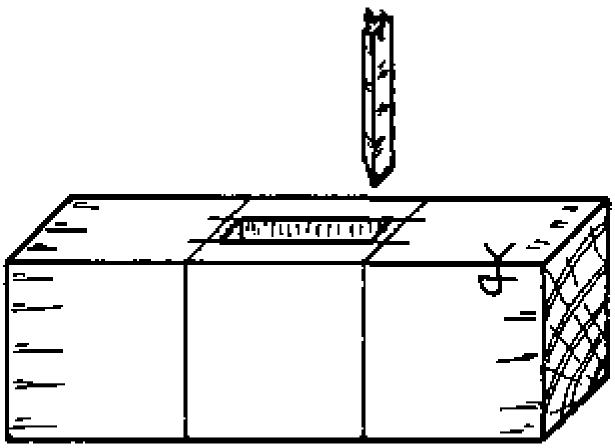

Fig. 7

- When most of the waste is out, chisel out the remainder to the line (Fig. 8).

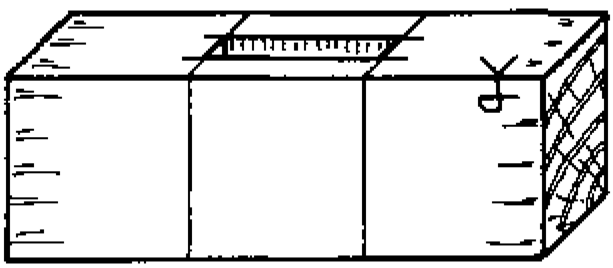

Fig. 8

- Keep the cutting edge of the chisel across the grain.

Step 4. Cutting the tenon

- Rip the sides of the tenon, sawing on the waste side of the lines (Fig. 9).

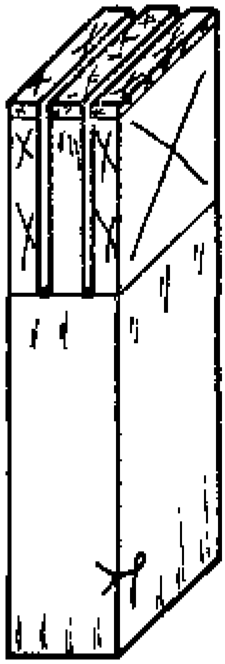

Fig. 9

- Saw in steps (see tee-halved joint).

- Carefully saw the shoulders, keeping the saw vertical and on the waste side of the line (Fig. 10 & 11).

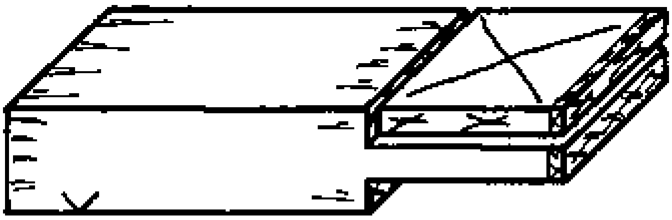

Fig. 10

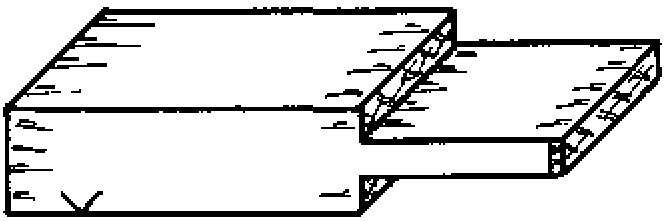

Fig. 11

Step 5. Assembling the joint

- Check whether the members fit together (see Assembly section for the mortice and tenon joint for box-like constructions).

- Clean up inside the joint where it cannot be reached after assembly.

- Assemble the joint with glue.

- When it is dry, plane off the waste of the tenon.

- Clean up the edges and sides with a smoothing plane.

Note the importance of marking the waste as you mark out the pieces. This cannot be over-emphasized. Most construction mistakes are made by cutting on the wrong side of the line, due to improper marking.

NOTES:

Haunched mortice and tenon joint

Another type of mortice and tenon for frame-like constructions is the haunched mortice and tenon (Fig. 1). This joint is used where one member meets another at a corner.

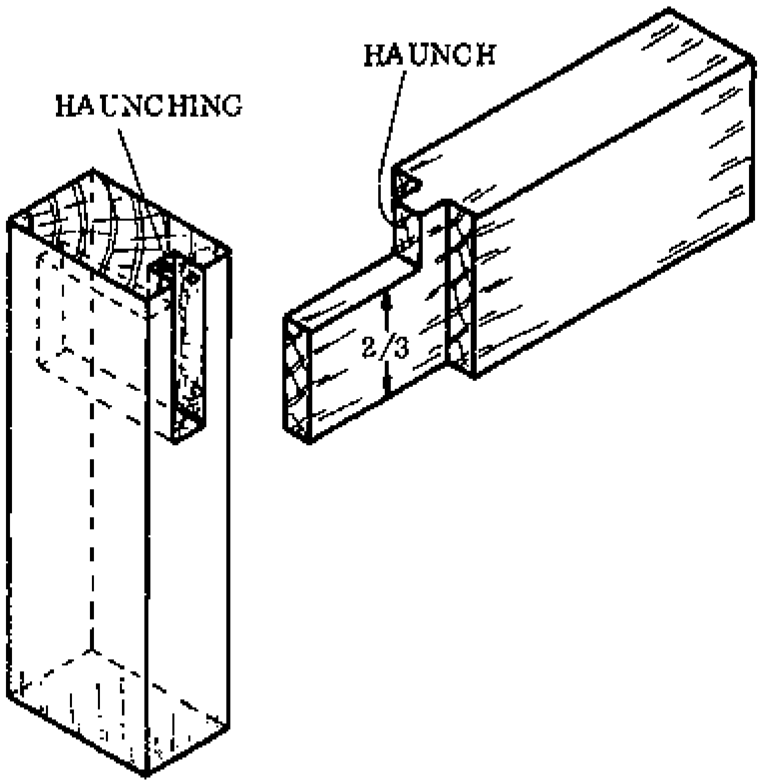

Fig. 1

The width of the tenon is reduced to 2/3rd of the width of the board and the mortice size is reduced to suit (Fig. 1).

A haunch is left on the tenon to prevent it from twisting in the mortice. The length of the haunch is equal to the thickness of the tenon and it fits into a recess above the mortice, called the haunching.

Otherwise, the sequence of operations for construction of this kind of joint is the same as for the common mortice and tenon joint.

When you make the cutting list for this type of joint, the allowance in length for the member with the mortice should be 25 mm instead of 12 mm to help prevent splitting of the haunching (see Cutting List, page 90).

Stub tenon joint

Where the end grain of the tenon and the opening of the mortice must be hidden, the stub tenon joint is chosen (Fig. 2). In this joint the tenon does not pass through the morticed member, but is stopped inside. The sequence of operations for constructing this joint is the same as for the common mortice and tenon joint. Stub tenons are also used for box-like constructions.

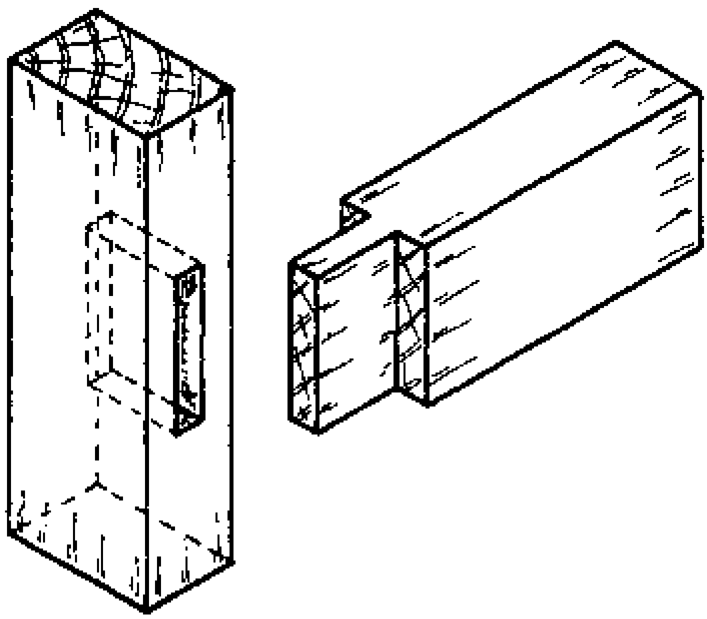

Fig. 2

At times a combination of the haunched and stub tenons is required. This is called a haunched stub mortice and tenon joint.

Twin tenon joint

Where the members to be joined are very thick, twin tenons are used (Fig. 3). Each tenon is then not 1/3rd, but 1/5th of the thickness of the members.

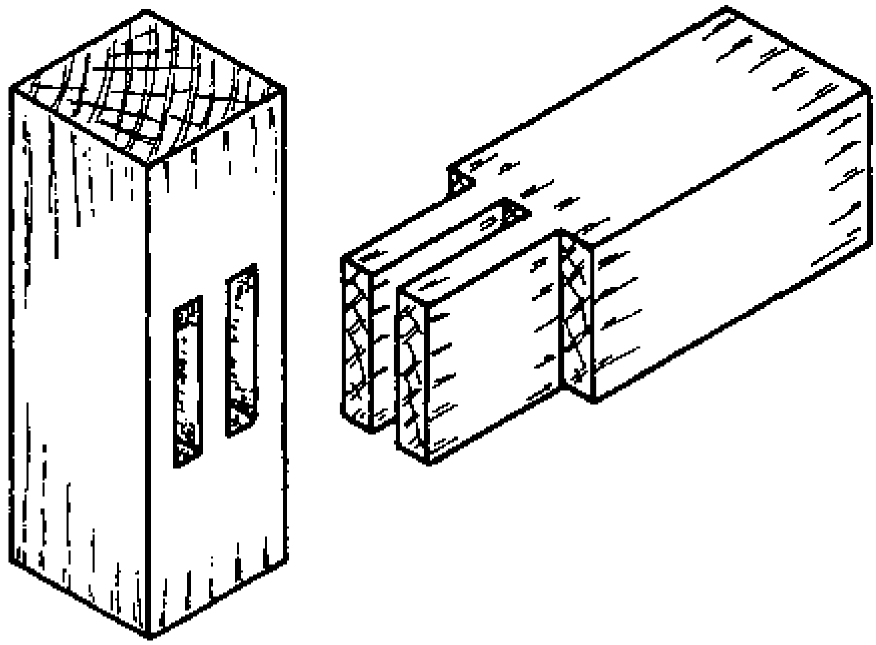

Fig. 3

The sequence of operations is almost the same as for the common mortice and tenon joint, with the only difference being that two mortices and tenons have to be marked and cut instead of only one.

This joint can be used for both frame-like and box-like constructions.

NOTES:

Securing the joints

Instead of nails to secure mortice and tenon joints, either pegs or wedges can be used.

One or two holes are drilled through the assembled joint and wooden dowels, or pegs, as they are called in this case, are inserted with glue to securely fix the joint (Fig. 1).

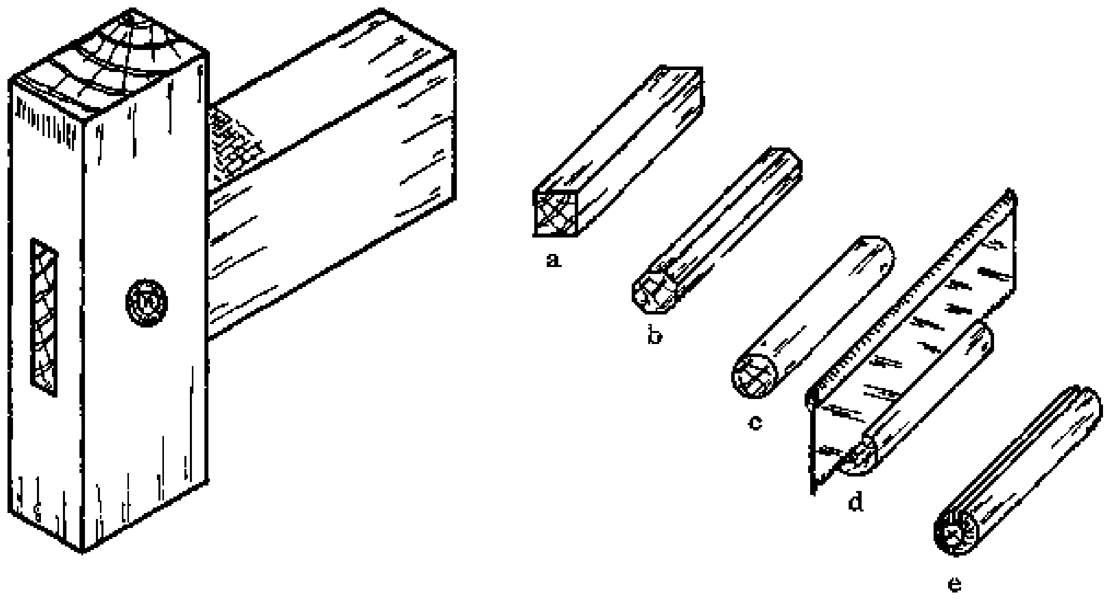

Fig. 1

- To make the dowels, plane off the corners of a square piece of hard wood, until the piece is round. When the dowel is cut to length, chamfer the ends and cut a groove along the length to permit air and excess glue to escape (Fig. 1, a - e).

Follow the steps below to secure a joint by means of wedges.

- Cut the mortice with an allowance of 2 mm in width, tapering from the outside edge to about 2/3rd of its depth (Fig. 2).

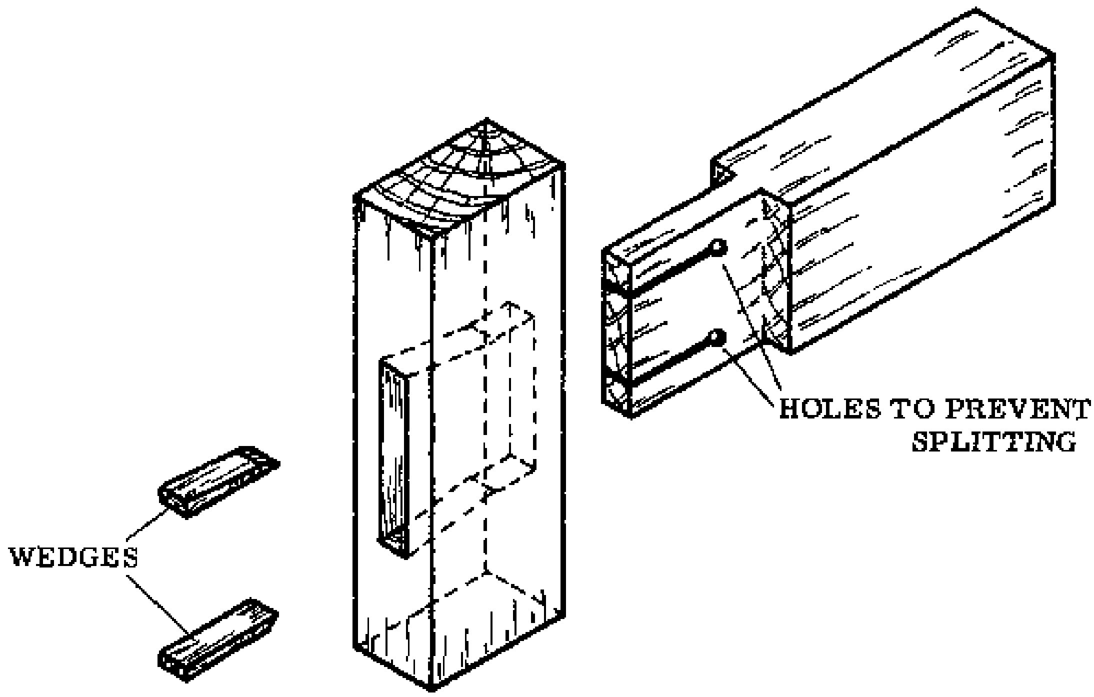

Fig. 2

- Make cuts in the tenon to receive the wedges.

- To prevent splitting of the tenon, drill small holes at the end of each cut.

- Cut the wedges from small pieces of waste wood; they should have the same length as the tenon.

Haunched mortice and tenon joints in frame-like constructions should not be wedged, because of the danger of breaking off the small haunch at the corner of the joint.

Both wedges and pegs can be used for securing mortice and tenon joints in box-like constructions.

NOTES:

Bridle joint

Bridle joints are similar to mortice and tenon joints. They consist of a pin and a socket (Fig. 1). The thickness of the pin is 1/3rd of the thickness of the member.

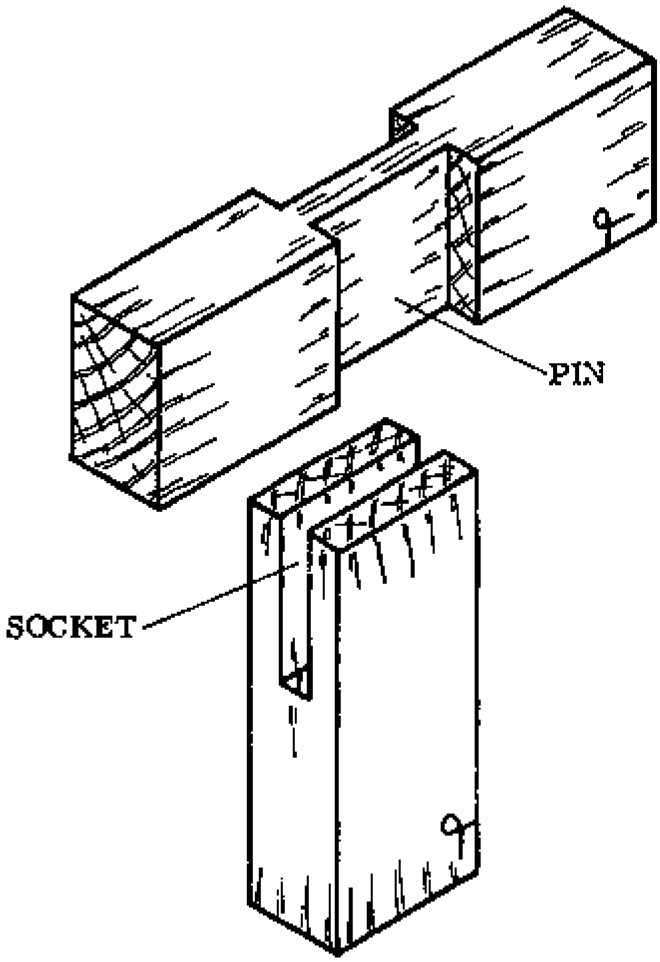

Fig. 1

The two types of bridle joint are the tee bridle (Fig. 1) and the corner bridle.

Here we will only go into detail about the tee bridle, since the construction of the corner bridle joint follows much the same procedure. .

Sequence of operations for constructing the joint

Step 1. Preparation of the timber

- Make a cutting list.

- Prepare the timber.

Step 2. Marking out

- Mark the position of the pin on one member, making the distance between the shoulders equal to the width of the other piece. Square the lines all around the piece with a try square and pencil (Fig. 2).

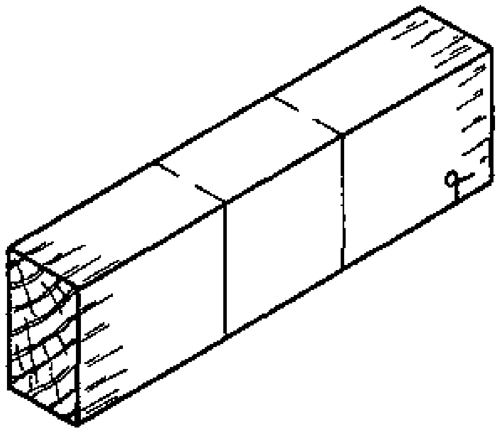

Fig. 2

- Mark the length of the socket (plus 2 mm waste) on the end of the other member, making the length equal to the width of the pin. Square the lines across the face side and on both edges (Fig. 3). Remember to smooth the pieces before using them to mark.

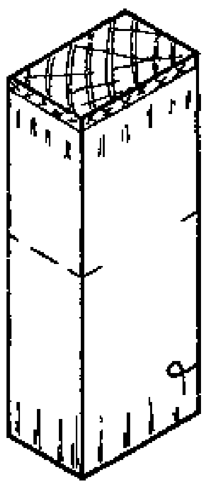

Fig. 3

- Set a marking gauge to 1/3rd of the thickness of the member and gauge along both edges of the pin. Use the gauge from the face side only. Mark the waste with small crosses (Fig. 4).

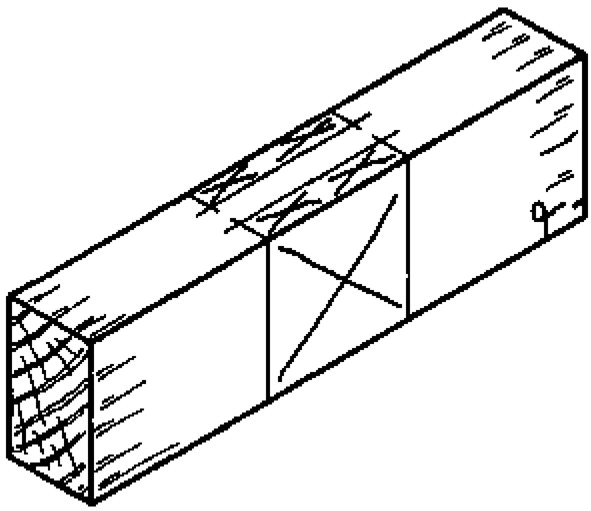

Fig. 4

- With the same setting on the gauge, mark around the end of the socket. Mark the waste (Fig. 5).

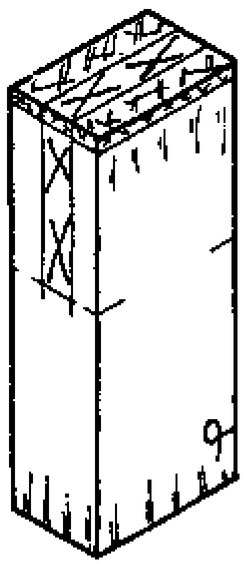

Fig. 5

- Mark the other side of the socket in the same manner, from the face side, with the gauge set at 2/3rds of the thickness of the piece. If you have a gauge with 2 pins, mark both lines at once.

- Check the fitting.

NOTES:

Step 3. Cutting the pin

- Carefully saw the shoulders down to the gauge line, sawing on the waste side of the line (Fig. 6).

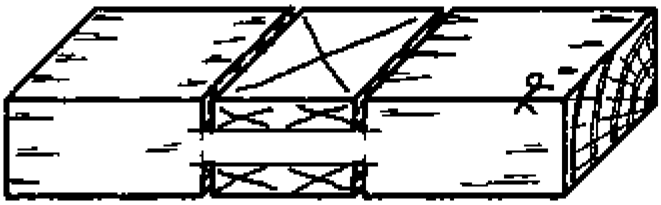

Fig. 6

- Chisel away the waste, chiselling halfway through from both edges (Fig. 7).

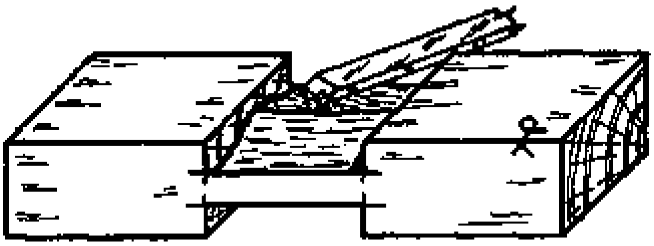

Fig. 7

Step 4. Cutting the socket

- Rip the sides of the socket down to the required depth, sawing on the waste side of the lines (Fig. 9). Saw in steps (see Tee-halved joint, Cutting the pin, page 114).

Fig. 8

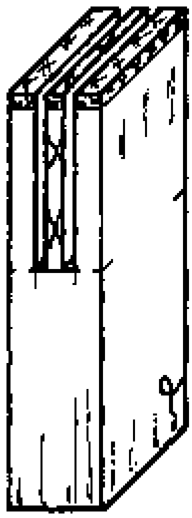

Fig. 9

- Chop out the waste with a mortice chisel, chiselling halfway through from both edges (Figs. 10 & 11).

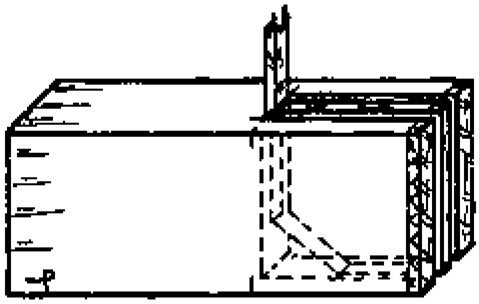

Fig. 10

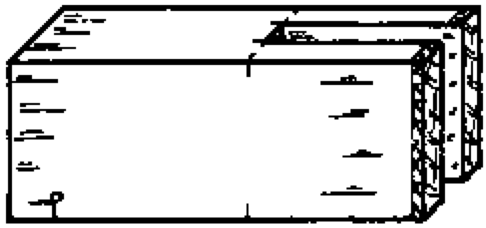

Fig. 11

Step 5. Assembling the joint

- Clean up the inside edges which cannot be reached after the joint is assembled.

- Assemble the joint with glue and nails.

- When the glue is dry, plane off the waste of the socket.

- Clean up the sides and edges with a smoothing plane.

Corner bridle joint

The corner bridle joint is used where members meet to form the corner of a frame. Like the tee bridle, it consists of a pin and a socket (Fig. 12).

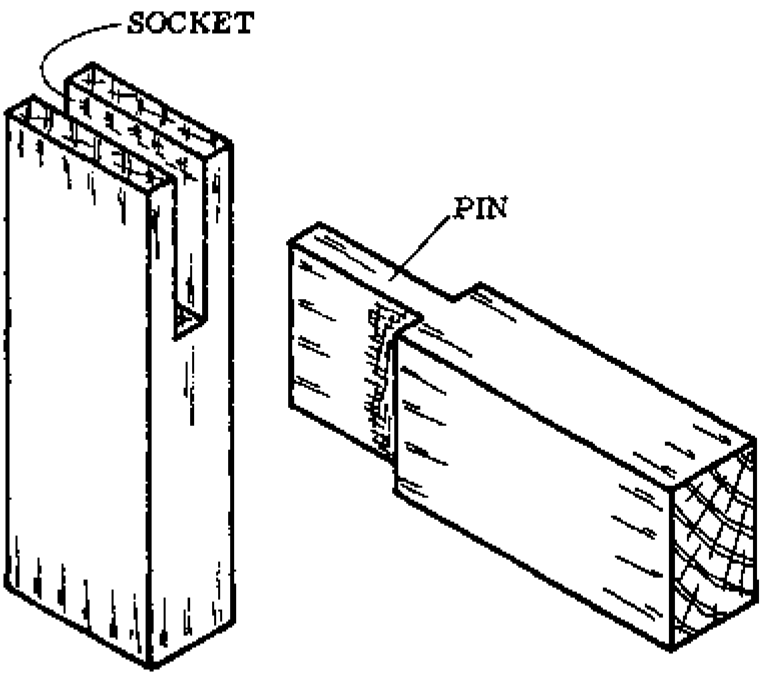

Fig. 12

The pin is constructed like the tenon in the sequence of operations for the mortice and tenon joint for frame-like constructions, pages 118 to 120.

The socket is constructed in the same way as the socket for the tee bridle joint, above.

NOTES:

WIDENING JOINTS

Widening joints are joints used to make a single, wide board by joining two or more narrow boards along their length, edge to edge (Fig. 1).

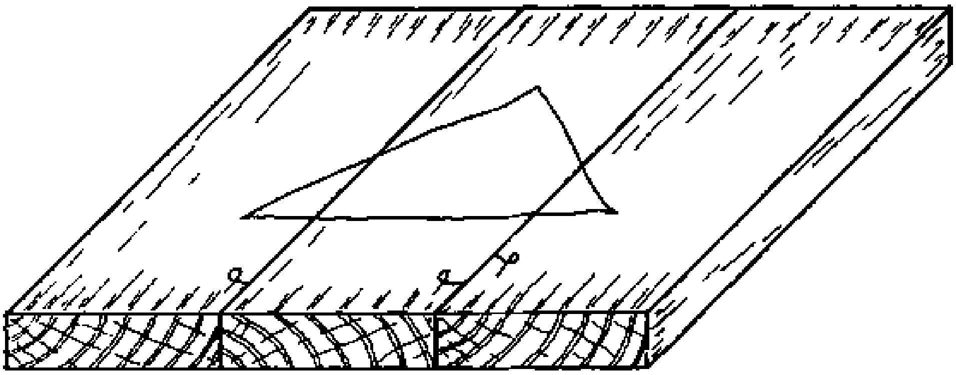

Fig. 1

The boards that will be joined must first be marked. Lay the boards out in the desired position and mark them with a triangular mark over all the boards (Fig. 1). The triangle should point upwards. This mark will help us to keep in mind the position of each board during the steps that follow.

Plain glued butt joint

This is the simplest widening joint (Fig. 2). The edges of the boards are planed perfectly straight and square, and then butted together. The joint is glued and clamped tightly to force out the surplus glue. For narrow pieces this is done with G-clamps. For wider pieces, wooden or metal sash clamps are used.

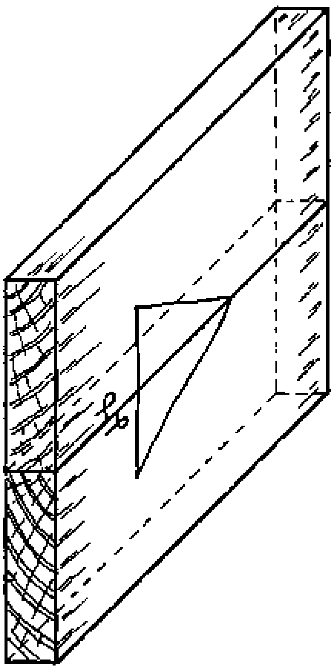

Fig. 2

Dowelled widening joint

This joint is similar to the plain glued butt joint, but strength is added by means of cylindrical wooden pins, called dowels. Dowels are made as explained in the section on securing joints. The dowels are then glued into holes in the edge of each board (Fig. 3). The diameter of the dowels should be about one-third of the thickness of the pieces that are being joined.

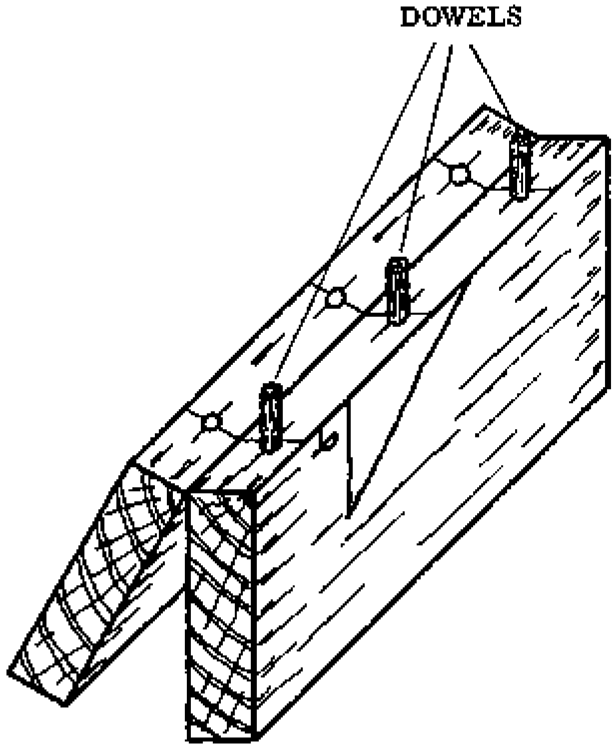

Fig. 3

The holes should be about as deep as the boards are thick, and they should be slightly countersunk (see Fastening with Screws, page 96).

Mark out the position of the dowels by putting the boards on top of each other, sides together and marking both edges at the same time. The centre can be marked with a marking gauge, marking from the face side.

Metal or wooden sash clamps are used to press the boards together during glueing.

NOTES:

Rebated joint

In this widening joint, the edges of the boards are rebated to match each other (Fig. 1). The rebating is done with either an ordinary rebate plane or an adjustable one. This joint is stronger than the plain glued butt joint.

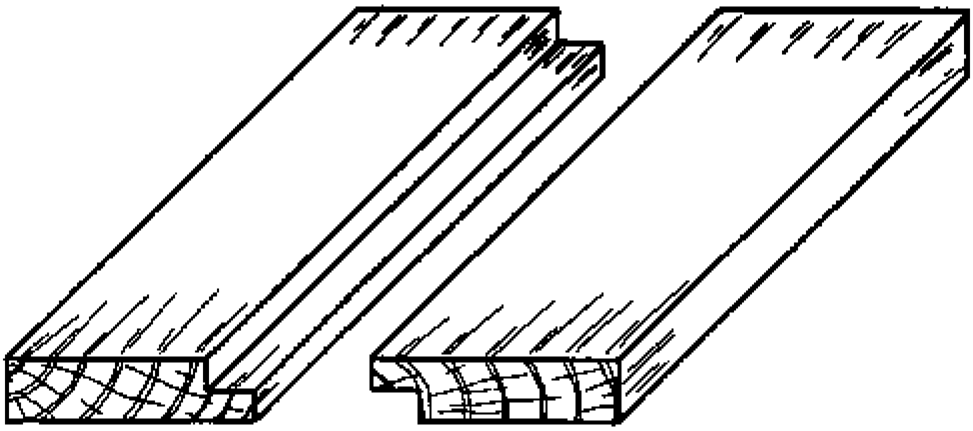

Fig. 1

How to plane a rebate with an ordinary rebate plane

Step 1.

- Mark the depth and width of the rebate with a marking gauge (Fig. 2).

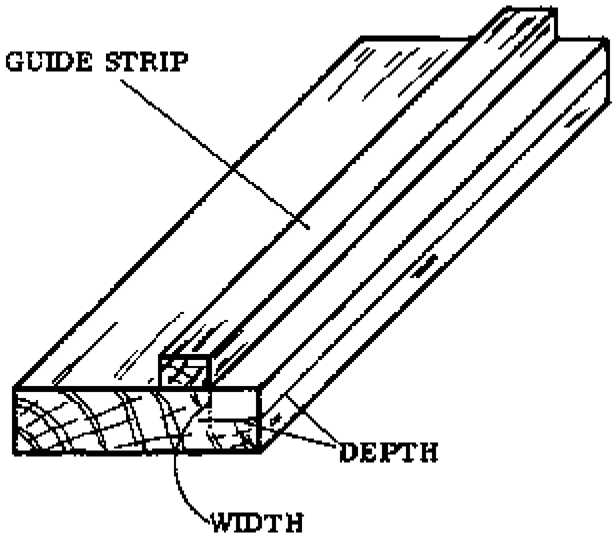

Fig. 2

Step 2.

- Fix a wooden guide strip along the line that marks the width of the rebate (Fig. 2).

The guide strip must be perfectly square and it should lie flat.

Step 3.

- Plane until you reach the line marking the depth of the rebate. Take care that the side of the plane is always against the guide strip, so that the width of the rebate is the same along the whole length.

- If you notice that you are planing against the grain, stop just before you reach the required depth and plane from the other direction. This will ensure that the surface of the rebate is smooth.

An important point in planing rebates is setting the plane correctly. The side of the cutting iron that faces the rebate must be set so it is exactly flush with or only slightly coming out at the side of the plane. If it projects too far it will damage the guide strip, and if it is set in from the side it will not plane true (Fig. 3).

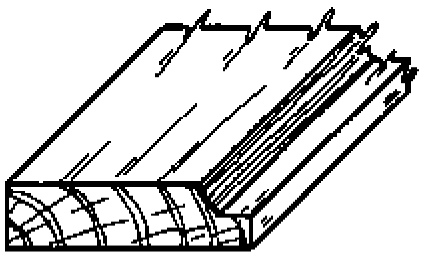

Fig. 3

When you set the cutting iron, do not knock on it with a steel hammer. This will damage the iron. Rather, loosen the wedge slightly and knock it with a mallet or a piece of wood.

When the rebate plane is not set well, it will tend to slip off the rebate and will not produce a good surface.

NOTES:

How to plane a rebate with an adjustable rebate plane

To make work simpler, we can fix guides onto the rebate plane itself. Thus, fixing guide strips on the boards is unnecessary (Fig. 1).

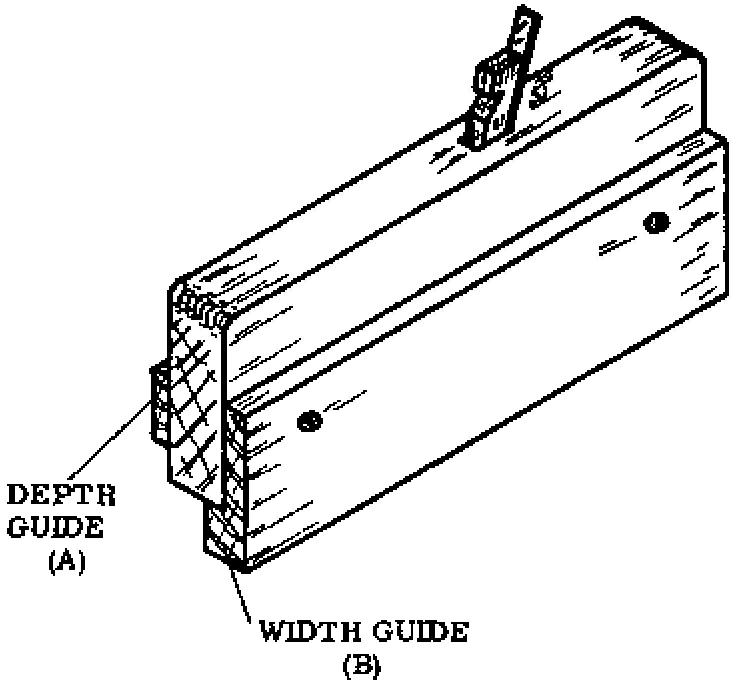

Fig. 1

One wooden piece is fixed on the sole of the plane (B) at the standard width for rebates and another piece is fixed on the side of the plane (A) and can be moved up or down to adjust the depth of the rebate. The width can also be adjusted, by using a wider or narrower wood guide (Fig. 2).

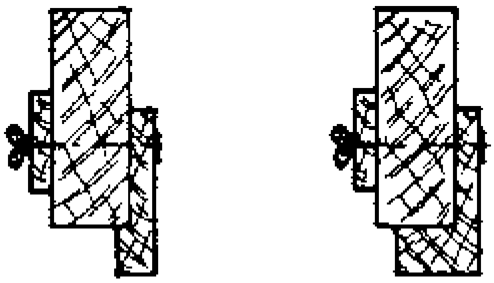

Fig. 2

The guides should not be nailed to the plane, since that would damage it. They should be fixed by bolts and nuts, so that they can be easily removed.

Plane until the depth guide just touches the work. Take care that the width guide is always firmly pressed to the side of the timber. If you notice that you are planing against the grain, stop just before you reach the required depth and finish planing with the guide strips removed, which enables you to plane in the other direction. This gives a good surface to the rebate.

See the section on the ordinary rebate plane for tips on how to set the cutting iron.

Loose tongued joint

This joint is used where a joint stronger than the plain glued or rebated joint is needed. The boards to be joined must be at least 2 cm thick (Fig. 3).

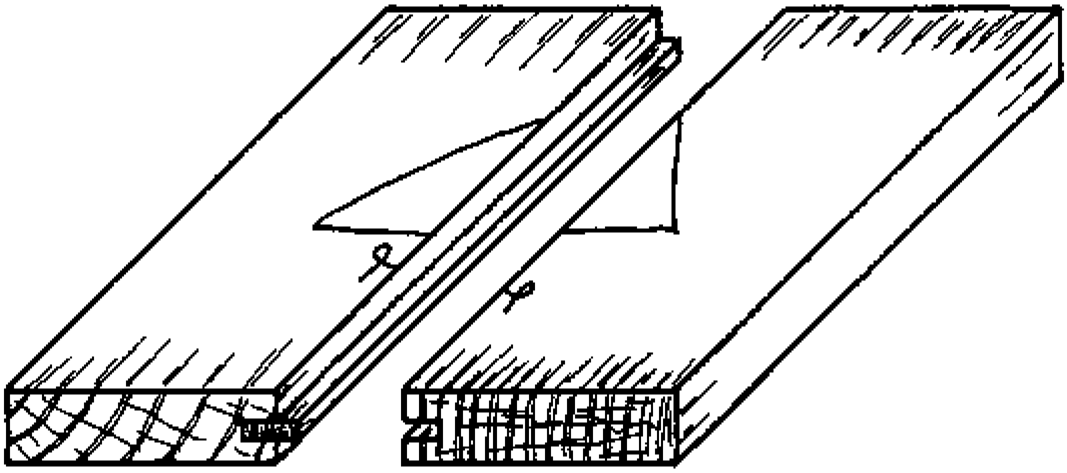

Fig. 3

The joining edges are grooved and a tongue is glued into the grooves. The depth of the groove is about 2/3rd of the thickness of the board. The width of the groove is equal to the thickness of the tongue. The groove should be slightly deeper than the projection of the tongue, to allow for expansion (Fig. 4).

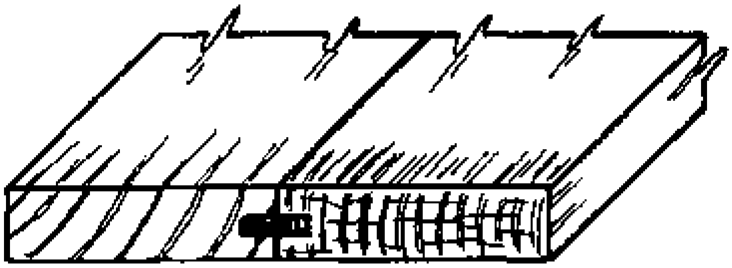

Fig. 4

Plywood makes a very strong tongue and it is frequently used for this purpose.

If solid wood is used as a tongue, care must be taken that it is always cut across the grain. A tongue cut with the grain will make a weak joint.

NOTES:

How to plane a groove for a loose tongued joint

Usually special planes called plough planes are used to plane grooves for this kind of joint. If a plough plane is not available, we can adapt our rebate plane for this purpose and make an improvised plough plane (Fig. 1).

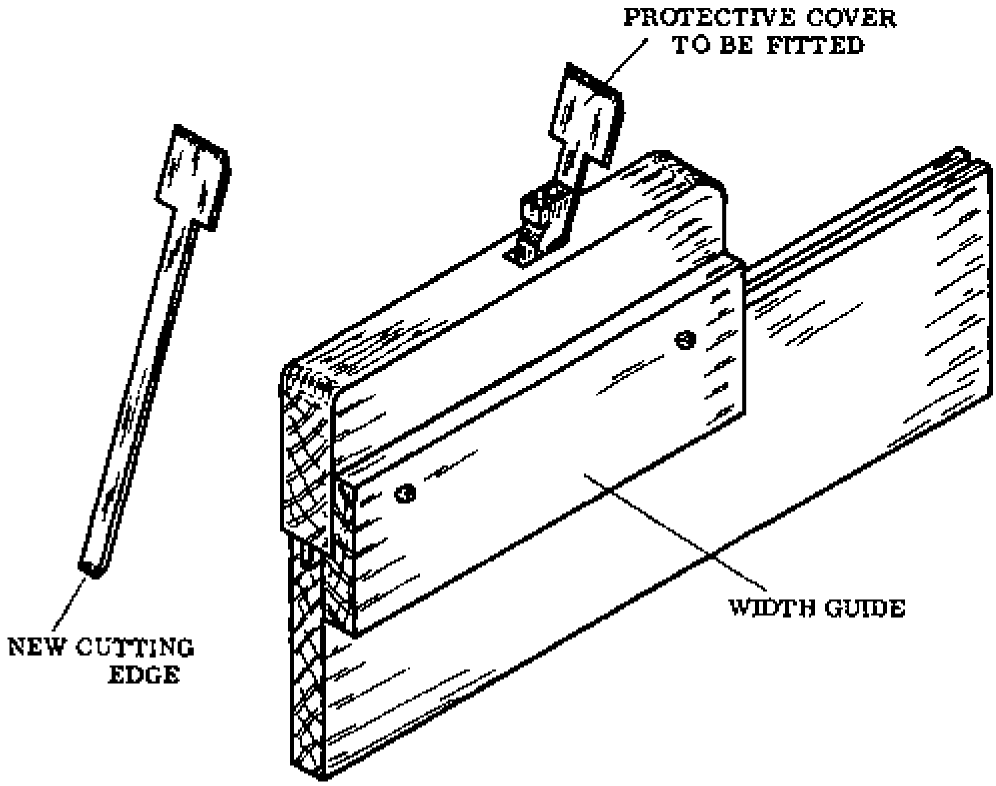

Fig. 1

To do this, grind and sharpen the narrow end of the rebate plane cutting iron to make a cutting edge. Grind the sides of the iron to the size of the most commonly used tongue, which is 6 mm plywood. The sides should be slightly bevelled to ensure free movement in the groove.

When the iron is fitted into the plane it is adjusted so that the cutting edge projects out of the sole by exactly the required depth of the groove.

A guide, similar to the one used for the adjustable rebate plane, is now fitted to the side of the plane. This guide keeps the cutting iron at the right distance from the face side of the boards. It should be adjusted according to the most common thickness of the boards, in this case it is about 22 mm for a planed board. For a tongue size of 6 mm then, the distance between the edge of the guide and the edge of the cutting iron will be 8 mm.

When planing press the guide firmly against the side of the wood and hold the plane exactly at a right angle to the edge of the board.

The most difficult part will be to start the groove, since the cutting iron will tend to slip off the edge and it requires some experience to keep it steady. Go slowly at first.

Work from the face side at all times.

To prevent injuries cover the cutting edge where it sticks out of the top of the plane.

NOTES:

MISCELLANEOUS CARPENTRY TECHNIQUES

Marking a board to fit an irregular surface

To mark the edge of a board which you want to fit against an irregular surface such as an unplastered wall, hold the board firmly and level to the wall and mark it with a compass or a similar device as shown in Fig. 1.

Fig. 1

As one leg of the compass moves along the wall, the other leg will mark on the board an exact copy of the irregularities of the wall surface. The legs of the compass have to be set apart by a distance a little greater than the width of the biggest gap between the wall and the board.

If no compass is available, a small wooden block can be used instead (Fig. 1a). The pencil is held in the notch at one end and the other end is moved along the surface of the wall.

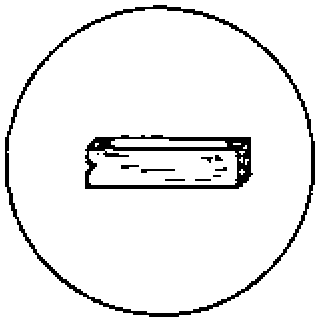

Fig. 1a

Measuring the width of openings

A convenient way to measure the width of openings such as doors and windows is to use two sticks as shown in the illustration (Fig. 2) to just span the opening. Then transfer the measurement to a single board by marking and measure it with a rule.

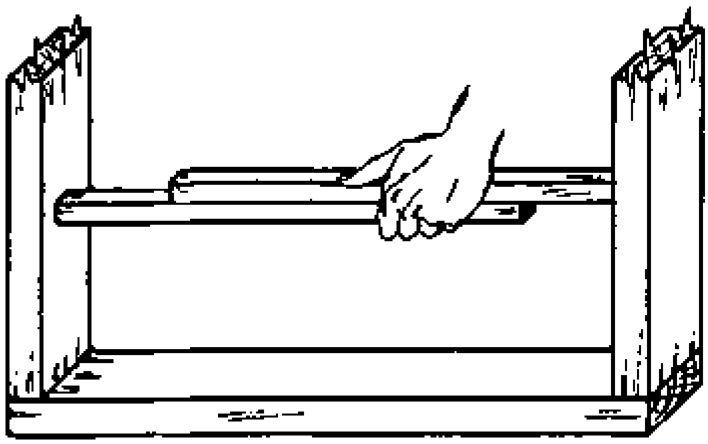

Fig. 2

Marking out irregular designs with templates

When you want to mark out several pieces with the same irregular shape, you can save time and ensure more accurate work by marking from a template (Fig. 3). Templates are thin pieces of cardboard or plywood onto which the required pattern is drawn and then cut out.

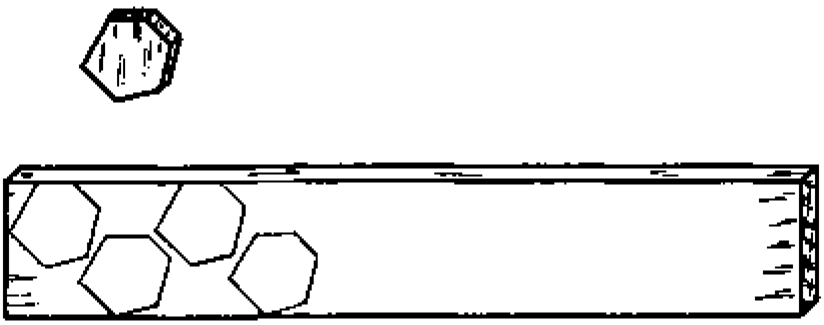

Fig. 3

The template is used by placing it on the material to be marked and holding it firmly in place while drawing around it.

NOTES:

PART 3: PREPARATION FOR ON-THE-JOB TRAINING

BUILDING PRELIMINARIES

Before anyone can actually start to erect a building, a number of preliminary steps must be completed. The very first step is the preparation of the plan.

Plan

The plan, also called the drawing, is a layout of a building drawn on paper. It contains all the information necessary to erect the house (see Drawing Book, page 55). The data and measurements given in the plan are essential for the builder to be able to construct the building so that it satisfies the customer's demands (Figs. 1 & 2).

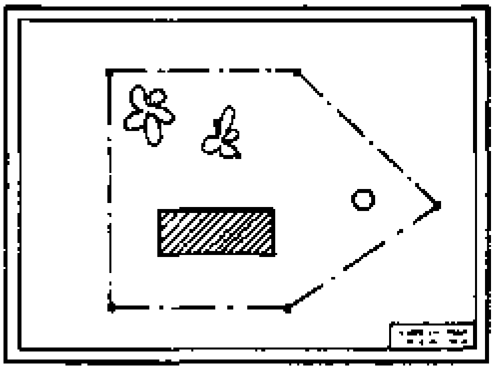

Fig. 1 LOCATION PLAN

Plot and site clearing

A plot is an area of land containing one or more sites. It is determined and limited by boundaries (Fig. 1).

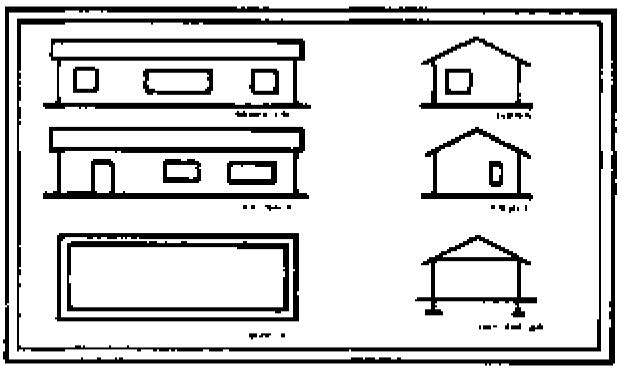

Fig. 2 BUILDING PLAN

The site is that area of land within the plot which is actually used for construction.

With the location plan in hand, the builder can prepare both plot and site for the construction of the building. The location plan tells him exactly where the trees and bushes have to be removed so that they don't interfere with the work. This preparation includes making a drive, cutting the grass, and levelling the surface of the ground.

The builder must pay special attention to the roots of trees which are on the site or very close to it. These must be completely removed. If some roots, such as those of the neem tree, remain in the ground, they can grow again and damage the structure.

Site organization

When the land clearing is completed, the building materials can be brought in to the building site.

Temporary work-sheds and stores may be erected in suitable places (Fig. 3).

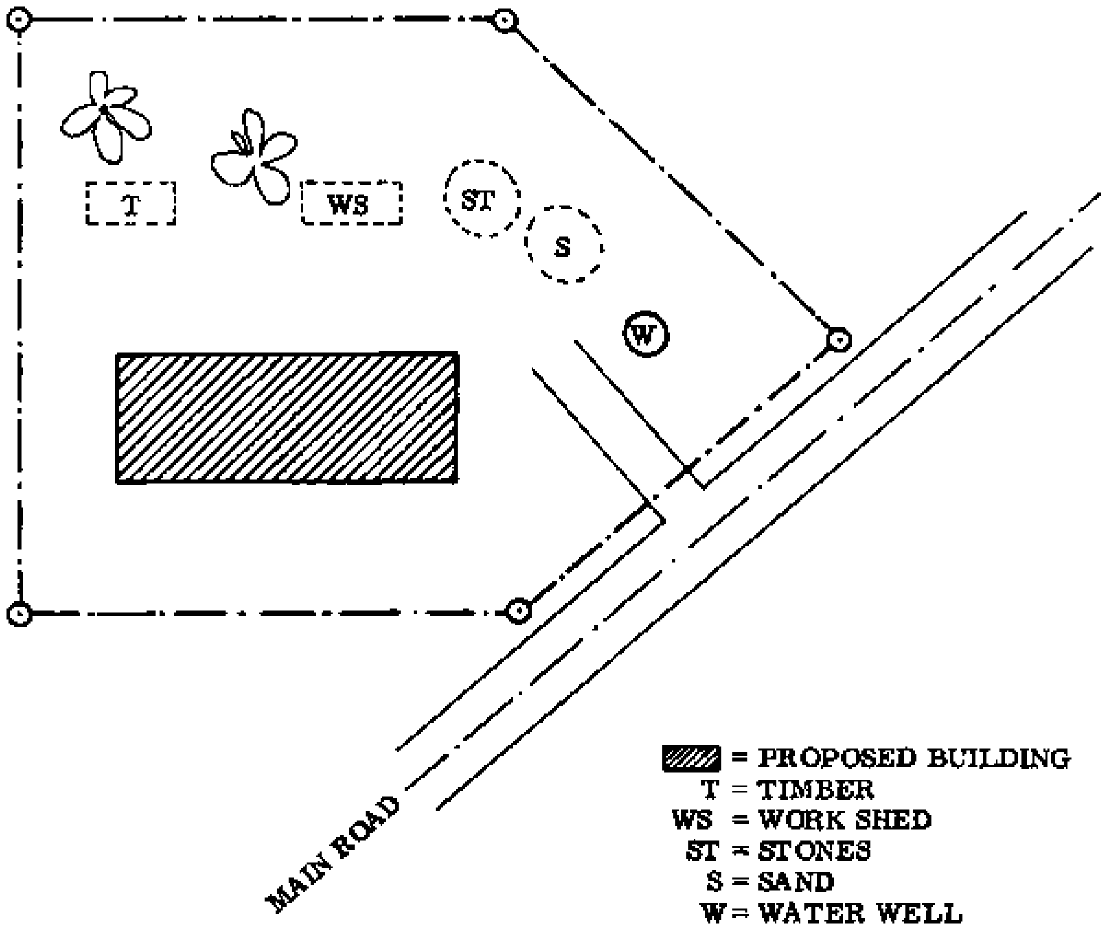

Fig. 3 SITE ORGANIZATION

The builder must ensure that there is an adequate supply of clean water. Without water no building can be constructed.

SETTING OUT

At the beginning of any construction activity the work must be carefully set out. This is also known as pegging out or lining out.

Setting out means to put pegs in the ground to mark out an excavation; or to mark on the floors to locate walls.

3-4-5 Method

The first line to be set out is the front line of the carcass (Fig. 1). A “carcass” is the building when it is structurally complete but otherwise unfinished. In this case we mean that the front line marks the position of the outside face of the (future) unplastered wall. The lines of all the other walls are measured from this front line. If the building is rectangular, right angles are set off from the front line by using the 3-4-5 method.

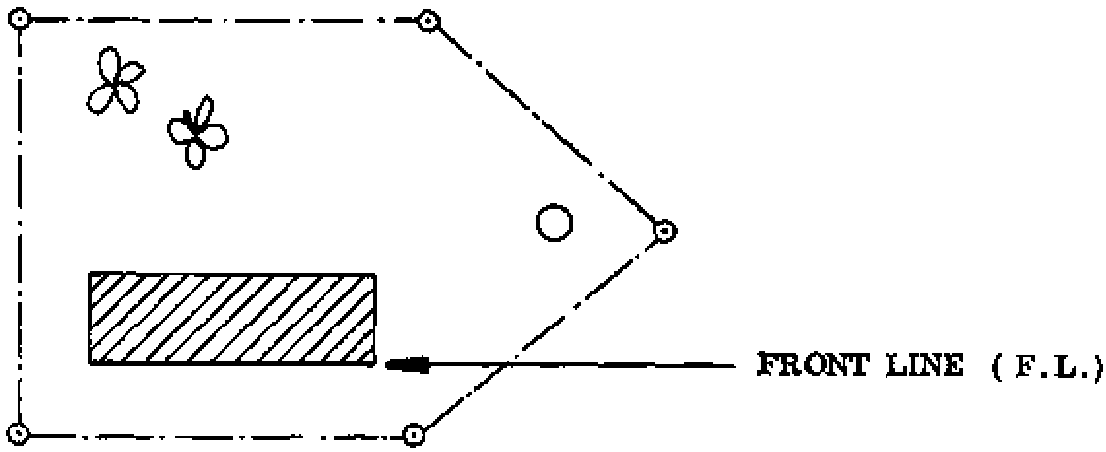

Fig. 1 LOCATION PLAN

The second line to be set out is the line of one of the side walls of the carcass. This line intersects the front line at the corner of the future building. To make sure that this corner is a right angle, we use the 3-4-5 method.

- Measure a distance of 4 m along the front line starting from point A, and mark this on the line (point B) (Fig. 2).

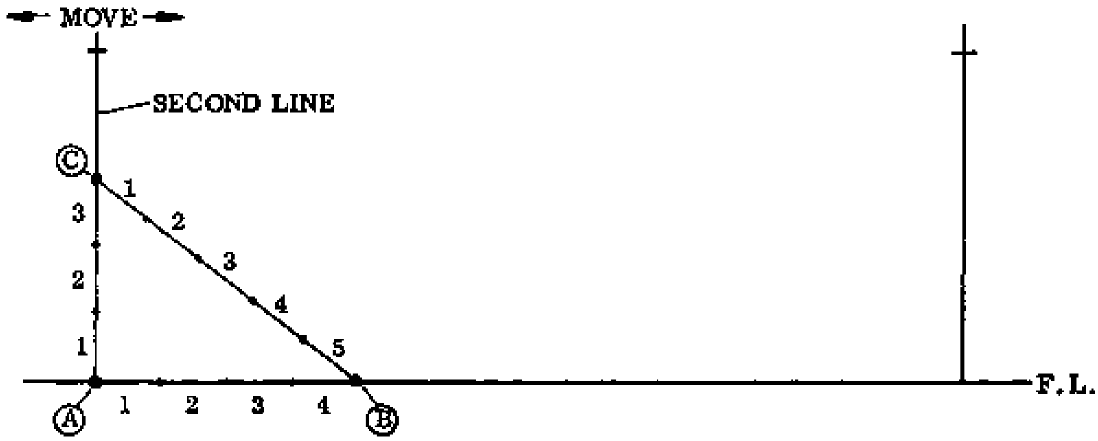

Fig. 2 3-4-5 METHOD

- Measure a distance of 3 m along the second line, starting from the corner (point A) and mark this distance (point C).

- Now take a line which is marked with a distance of 5 m, and stretch it taut from point B towards the line with point C. Keeping the end points of both lines steady (points A & B) and the lines taut; move the free ends of the side line and the 5 m line until the 5 m mark and the mark at point C meet each other. This is best done with two men, one at the end of each line.

- The corner angle must now be a right angle.

- Measure the required length of the side line and insert a peg at the end. Set out the opposite side line in the same way.

If the setting out has been done accurately, the length of the back line between the two pegs should be equal to that of the front line. Make a further check by measuring the diagonals, which must be equal (Fig. 3).

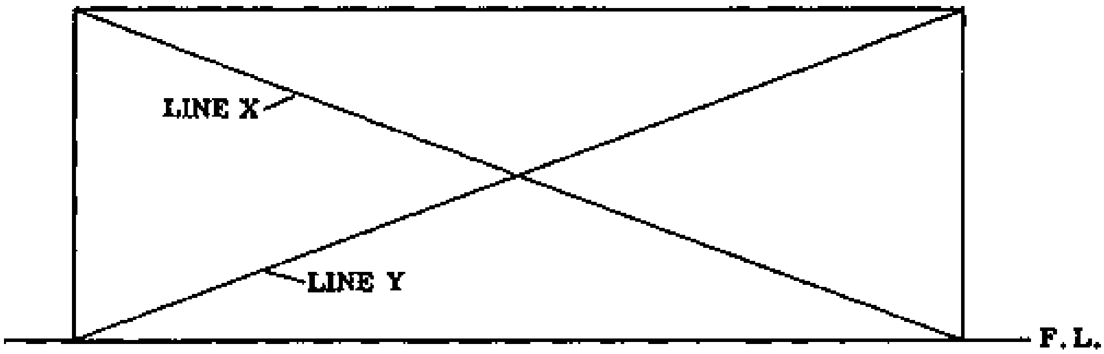

Fig. 3 LINES X AND Y ARE EQUAL IN LENGTH

NOTES:

Lining out

Once the positions of the corners and the distances between them are determined, the positions of the foundations, footings and walls as well as their thickness must be marked. A simple example of setting out and marking a foundation is shown in Fig. 1. The more complicated and permanent methods will be treated later.

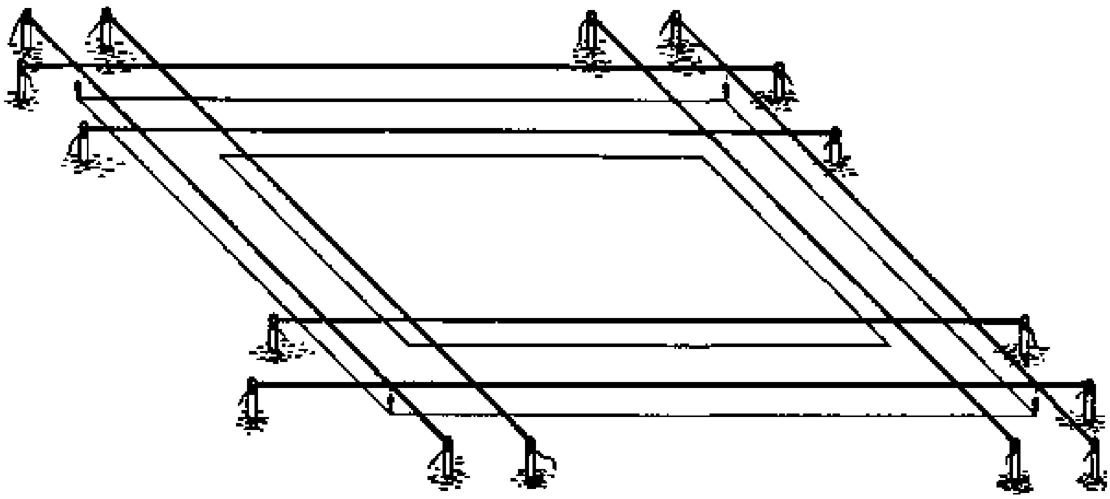

Fig. 1 SETTING OUT THE LINES & MARKING THE GROUND

These marks will be needed until the plinth course is completed, so they must be relatively durable, so that they remain accurate for a longer period and are not destroyed by rain or other influences.

Direct marking

Small buildings or small extensions of houses may be marked directly on the flat ground, provided that the excavation work can proceed immediately and can be quickly completed, so that the marking need not be repeated (Fig. 1).

In this procedure, the setting out must be done in stages.

- Mark the position and width of the foundation directly on the ground, and dig the trenches immediately.

- The next step is to level the bottom of the trenches and to peg off the foundation depth (Fig. 2).

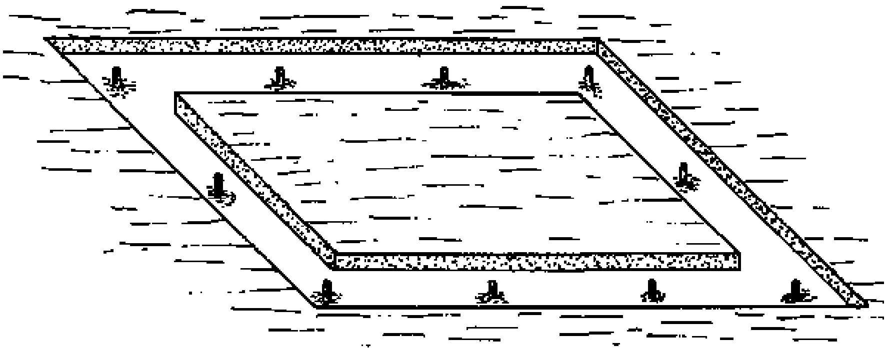

Fig. 2 PEGGING OFF THE FOUNDATION DEPTH

- After the foundation concrete is cast and set hard, set out the footings directly on the surface of the foundation (Fig. 3) and build them to the required height.

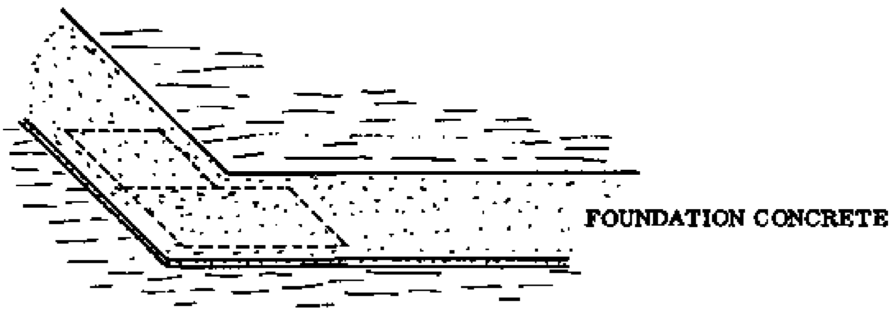

Fig. 3 SETTING OUT THE FOOTINGS (ENLARGED DETAIL)

- When the footings and hardcore filling are complete, set out the plinth course on the footings.

- NOTE: The information given in this section and in most of the following sections is not intended to be a detailed explanation. It is simply meant to give you, the trainee, an idea of the operations you can expect to encounter in your on-the-job training. Lining out, marking, etc. will be covered in detail in the Construction Book.

NOTES:

Using the plumb bob to mark the foundations

Hold the plumb bob with one hand by the suspending line so that the tip of the cylinder is just off the ground. Move it slowly until the suspending line just touches the intersection of the lines stretched between the pegs (see A & B, Fig. 1). When the swinging movement of the plumb bob has stopped, mark the point directly below the tip of the cylinder by inserting a peg.

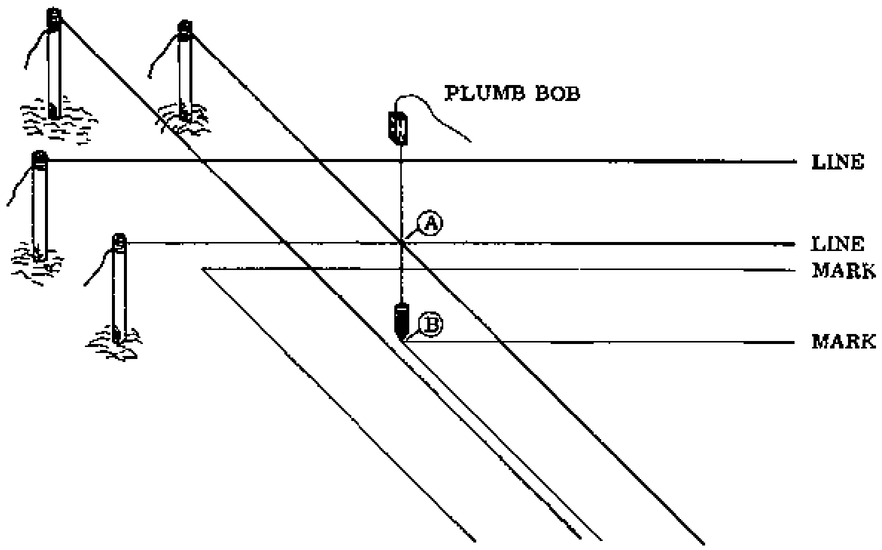

Fig. 1 USING THE PLUMB BOB

The peg is directly in line with the intersection of the lines above.

This procedure is repeated at all inside corners and outside corners, so that the edges of the foundation trenches can be marked on the ground.

Using the large square

The large square, described in the Reference Book, Tools, page 12, may be used to set out and mark off the positions of inside walls. This is less time-consuming than using the 3-4-5 method.

Place the large square on the ground with one side along an already determined line, and mark off the corner on the other side (Fig. 2).

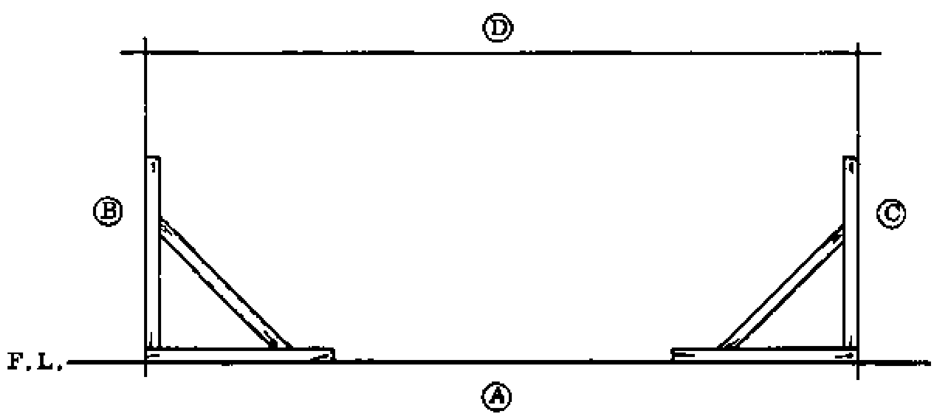

Fig. 2 USING THE LARGE SQUARE

PROCEDURE:

1 - FIX THE FRONT LINE; LINE A.
2 - MARK POINTS 1 AND 2.
3 - SET OUT LINE B SQUARE TO LINE A.
4 - SET OUT LINE C SQUARE TO LINE A.
5 - LINE D SHOULD BE THE SAME LENGTH AS LINE A.

Not only the whole building, but also each room in the building must be checked for squareness by comparing the diagonals, which have to be equal.

Using the mason square

Although it is less accurate than the large square because of its smaller size, the mason square can be used to mark off the corners of short set-backs such as niches designed to receive built-in wardrobes, etc. Follow the same procedure as with the large square (Fig. 2).

- NOTE: A niche, also called a blocked doorway, is a small recess in a wall, usually not extending to the ceiling. A set-back or return is the part which goes back, away from the front or direct line of the structure.

NOTES:

FOUNDATIONS

A foundation is the strong base of a building. It is the lowest part of the structure, the part which is in direct contact with the ground.

The purpose of the foundation is to receive the loads from the structure above and to spread them over a larger area of supporting soil or rock.

Excavating the foundation trenches

Once the setting out is completed and the position of the foundation is marked on the ground, the next step is to dig the trenches for the foundation concrete.

Remove the loose, soft topsoil to uncover the firm subsoil, preferably rocky soil. Dig the trenches to the required depth.

The soil which is taken out should be piled within or near to the area of the future building, so it can be used later for the hardcore filling. Take care to make the sides of the trenches vertical, and the bottom level. The corners should be sharp, not rounded (Figs. 1 & 2).

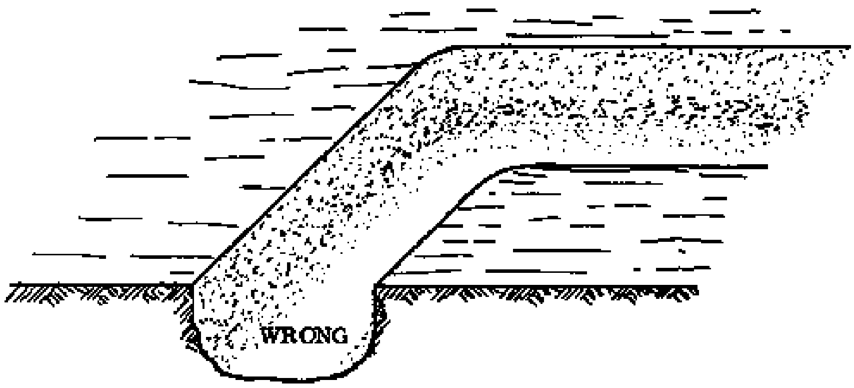

Fig. 1 CORNERS ARE NOT SHARP

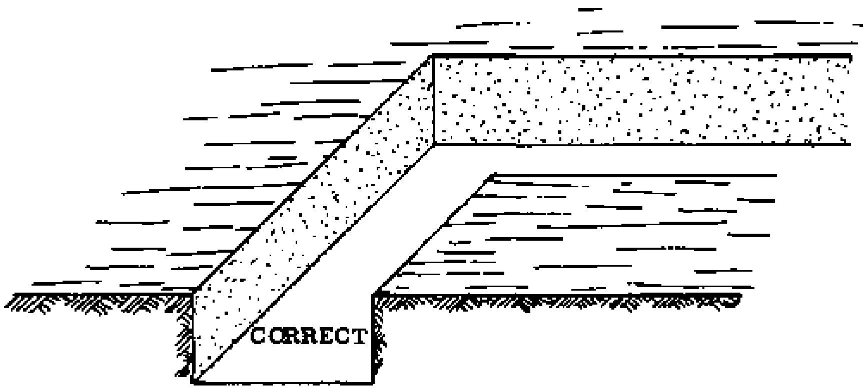

Fig. 2 CORNERS ARE SHARP

Marking the depth of the concrete and levelling the trench

When the trenches have been dug, the next step is to mark the depth of the foundation concrete. This is done by driving pegs in the bottom of the trench. The pegs are levelled across their tops, and their height above the trench bottom should be equal to the planned depth of the concrete bed (Fig. 3).

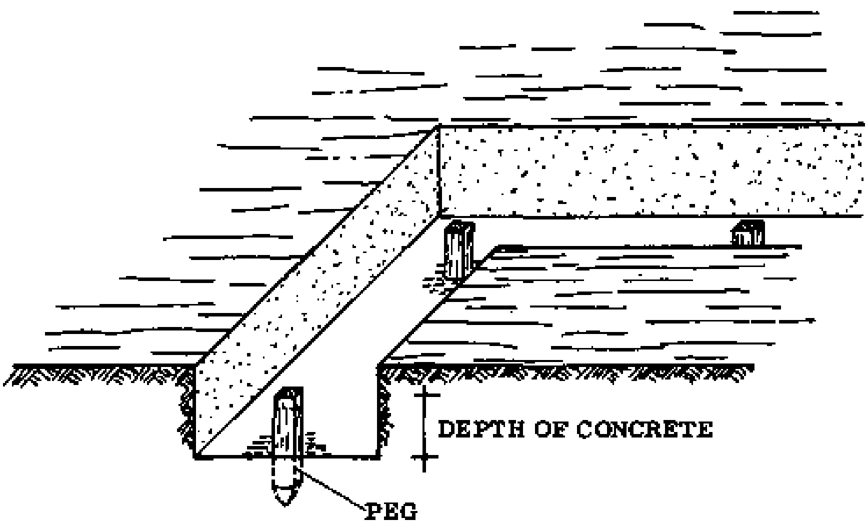

Fig. 3 HARKING THE DEPTH OF THE CONCRETE

If the exposed heights of the levelled pegs are not equal, that means the bottom of the trench is not level. The uneven spots have to be levelled by taking out some soil, until all the pegs project equally.

- NOTE: Never level the bottom of a trench by adding loose soil, as this might lead to uneven settlement which causes cracks in the structure. Trenches are always levelled by removing soil. If this means that the trench is deeper than planned, then either the foundation concrete has to be deeper or the height of the footings must be increased.

NOTES:

Foundation concrete

When the trenches are dug and the thickness of the concrete has been marked, the next step is to mix the foundation concrete. The proportions for the mix can be from 1:10 to 1: 15 (Reference Book, pages 166 to 170; and Tables of Figures, page 234).

Casting - Compacting - Levelling

If the work is done during the dry season, the sides and bottom of the trenches must be watered down before the ready-mixed concrete is cast. This keeps the soil from absorbing too much moisture from the concrete before it has set. The concrete is carefully poured into the trenches and compacted by tamping.

Rammers are used to compact the concrete (Reference Book, page 18). The heavy rammer is repeatedly lifted and dropped, compacting (packing together) the comparatively stiff concrete.

A strike-board (Reference Book, page 25) is used to level the concrete to the height of the pegs. A straight edge can also be used instead of the strike board.

If wooden trench pegs were used, remove them now and fill in the holes.

If iron pegs were used, they can be left in the concrete unless they are needed for another job.

Curing

Cover the top of the freshly cast foundation with empty cement bags or straw. This keeps it from drying out in the sun and air, and keeps the surface clean.

Once the concrete starts to harden, the top of the foundation should be kept wet.

NOTES:

FOOTINGS

The term footing is given to the courses of brickwork, stone or blockwork at the foot of a wall. The footing courses start immediately above the foundation and are laid flatwise. The rising wall is erected in the middle of the footing courses, so the footings, which are wider than the rising wall, project equally on both sides of the rising wall.

Purpose of footings

Two main functions must be fulfilled by the footings:

- They are the connecting link between walls and the foundation and act as an intermediate foundation for the walls, spreading the loads over a wider area of the concrete below.

- They raise the floor level high enough above ground level to keep water out during the wet season.

Height of footings

In Rural Building, the top of the foundations is usually at ground level, although they can be either above or below ground level depending on the subsoil.

When three footing courses are laid on top of the foundations, the soffit of the future floors will be 51 cm above ground level. This will meet the requirements of most situations.

If the building is in a valley, or in a place where the rain-water cannot run off quickly, the height of the footing courses must be increased.

NOTES:

HARDCORE FILLING

Hardcore filling is the compacted sub-base of floors; it consists of stones, broken sandcrete blocks or coarse gravel. It fills up the space between the subsoil and the soffit of the concrete floor.

Function of the hardcore filling

The hardcore filling has to carry most of the mass of the concrete floor, except for a small portion supported by the projecting inside edges of the footings. The filling must be well compacted to be firm enough to withstand the weight of the floors.

In addition, the hardcore filling must be built up in such a way that it prevents moisture from rising through it to penetrate the concrete floor.

Methods of filling and compaction

The topsoil is removed first (Figs. 1 & 2), then the hardcore filling is added in layers no more than 15 cm deep. Each layer is compacted very well before the next is added.

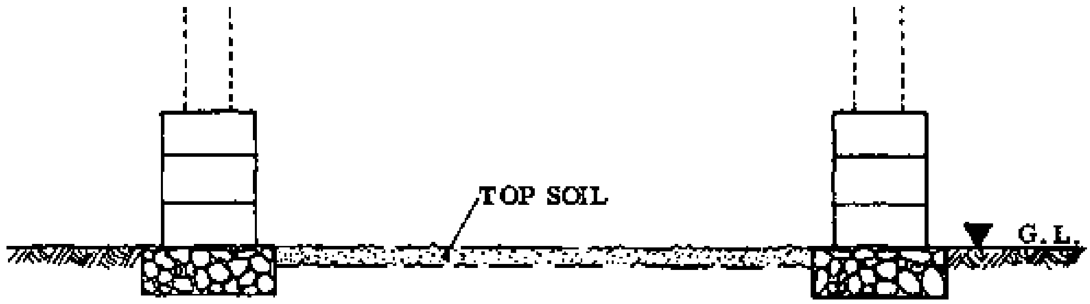

Fig. 1 FOOTING COMPLETED

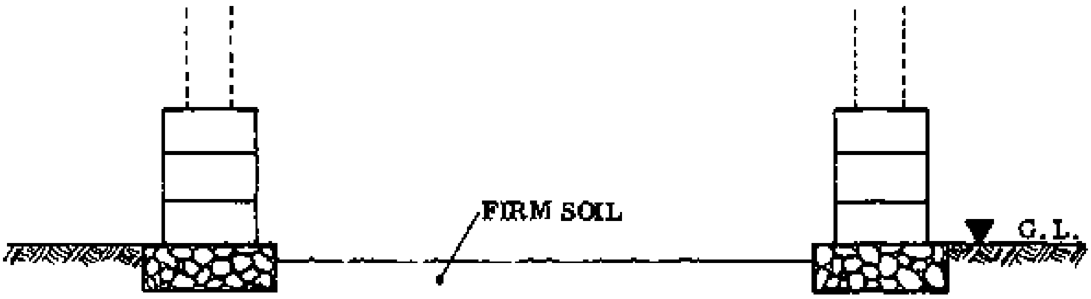

Fig. 2 TOP SOIL REMOVED

The bottom layer consists of small rocks, stones or broken sandcrete blocks. The second layer consists of smaller stones. Coarse gravel is used for all the remaining layers, up to about 6 cm below the tops of the footings. The last 6 cm or so is filled with fine sand, which seals off the surface so that no cement is wasted during the floor construction.

As can be seen in Fig. 3, the structure of the hardcore filling becomes denser and finer with each layer, starting from the bottom to the top. This is the correct way to protect the floor from the penetration of moisture.

Fig. 3 HARDCORE FILLING

All layers are compacted with rammers. The coarse gravel can be watered down to ensure proper compaction and to ease the work. If there is a tractor available, it may be used to move the fillings and to speed up the heavy work.

NOTES:

PLINTH COURSE

The plinth is a slightly thicker course at the base of a wall or a column; often made of a more durable material than the rest of the wall or column.

In Rural Building, the plinth commonly consists of only one sandcrete course. The plinth course forms the first course of the rising wall immediately above the footings, and it is 1 cm wider than the landcrete blocks (Fig. 1). This 1 cm difference is evident from the inside face of the wall, but it is covered when the wall is plastered.

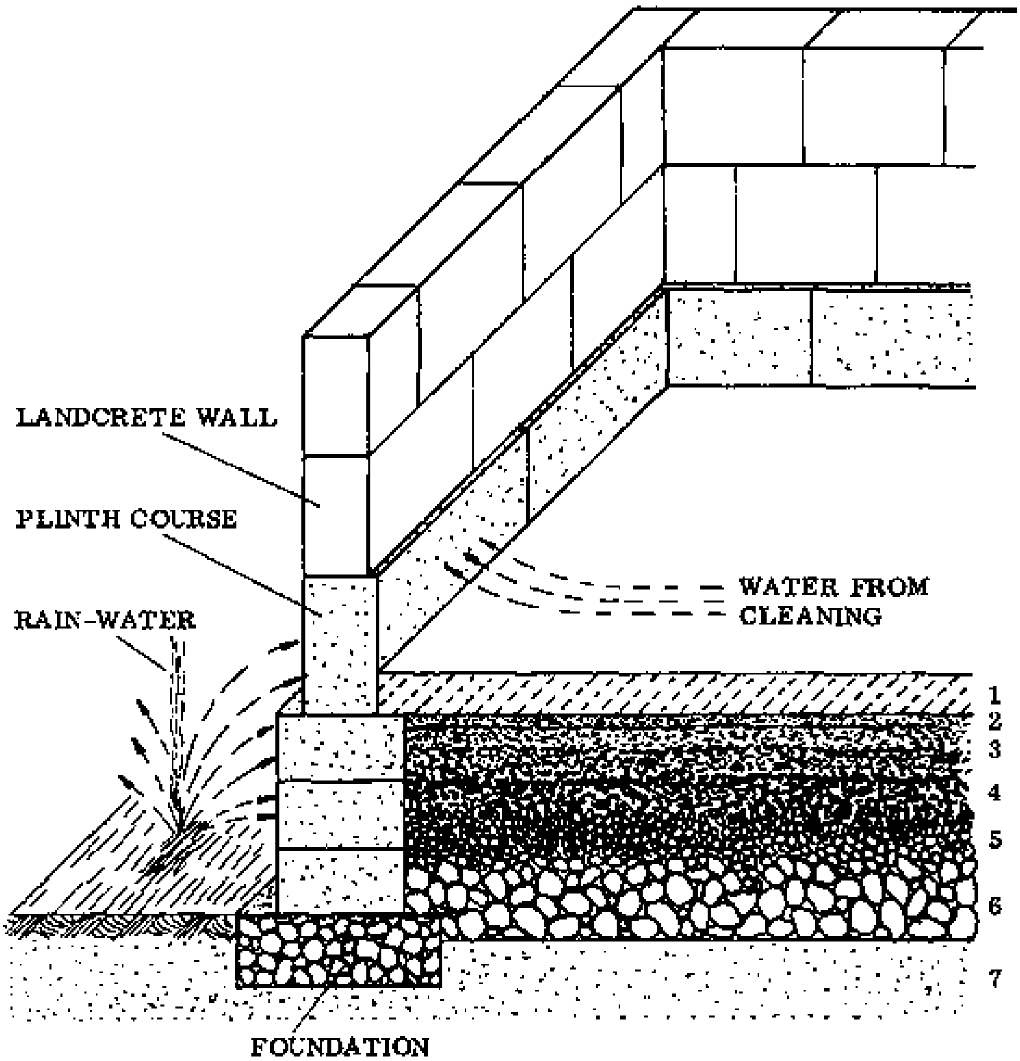

Fig. 1

1 - CONCRETE FLOOR
2 - FINE SAND
3 - FINE GRAVEL
4 - COARSE GRAVEL
5 - SMALL STONES
6 - ROCKS & STONES
7 - FIRM SOIL

Function of the plinth course

The plinth course raises the landcrete blocks above the finished floor level so that they cannot be penetrated by moisture (from outside by rain, from inside by water used for cleaning, etc.).

Although the landcrete blocks can withstand a skin-deep penetration of water for a short time, they must be protected against the long-lasting influences of the rainy season.

The most affected part of a building is always at the foot of the walls. Rain-water coming from the roof splashes up against the wall and creates a dirty strip about 60 cm in height, which is seen all along the footings. This area is more exposed to penetration by water than the rest of the wall, but the landcrete blocks are raised by the plinth course well above the endangered zone.

The illustration on the opposite page shows the possible paths which the water can take when penetrating the structure.

NOTES:

OPENINGS

An opening is a space in a wall left open for a door or a window. The first openings to be made in walls are the door openings.

Door openings

Before the plinth course is built, the door openings are marked in their correct positions on the footings.

In Rural Building, the door frames are usually made and set into place on the footings before the plinth course is built against the frames (Fig. 1).

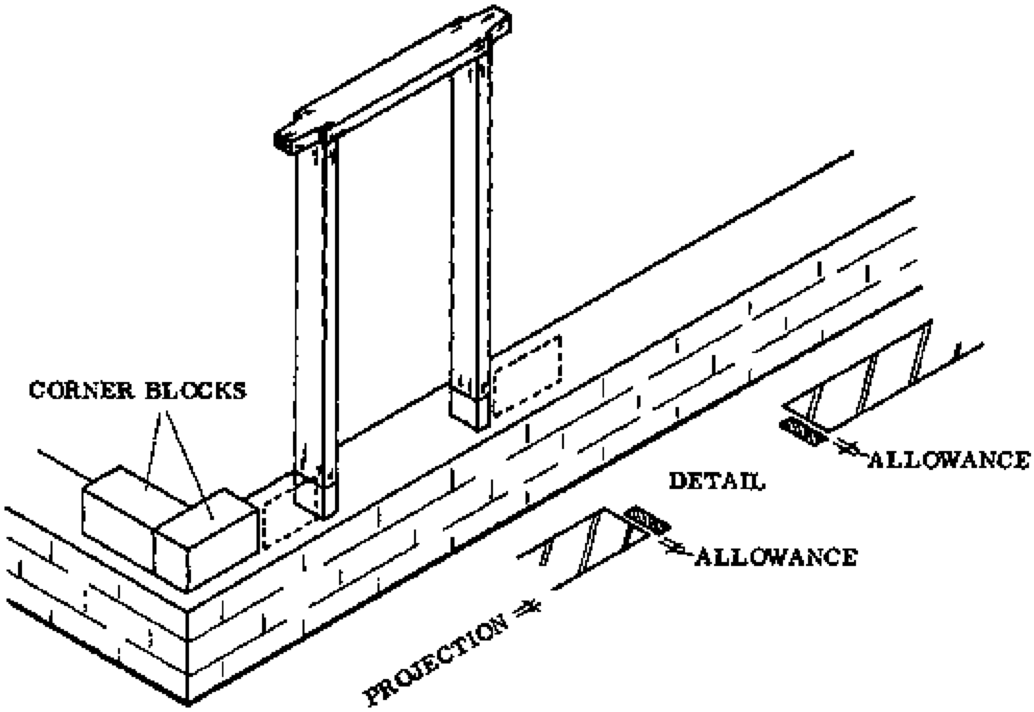

Fig. 1

If for some reason the door frames are to be installed later, the jambs of the openings (Fig. 2) are built up as described in the chapter on stopped ends, page 22.

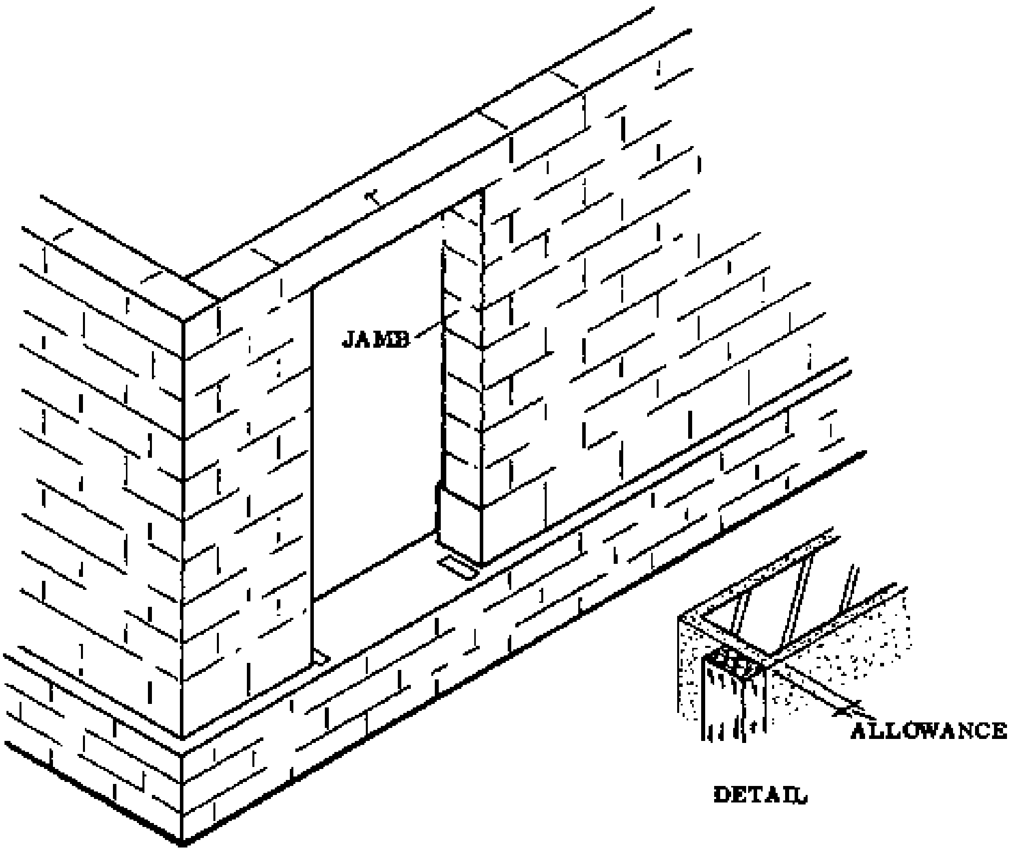

Fig. 2

A jamb is the portion of wall, or wall face, at the side of an opening. The jambs are built a little wider than the outside measurement of the frame (Fig. 2) so that the frame can fit into the wall opening.

Walling then continues until the window cill level is reached. This is the height where the window openings are set.

Window openings

The window frames are set and braced before the walling between them is completed. If the frames are to be set later, the window openings must also be built a little wider than the frames, so that the frames can be fitted in later.

In case the opening is to be filled with a decorative grille (Reference Book, page 193) or ventilation blocks (Reference Book, page 195), it is advisable to complete course by course including the special blocks.

This is done because it is easier than putting the decorative blocks into an opening later, and it provides the openwork screen blocks with more stability within the wall during construction.

NOTES:

SCAFFOLDING

A scaffold is a temporary structure which supports workers and materials during building and other work. It can be made of steel, aluminium, timber or bamboo.

According to their functions, there are three main types of scaffolds:

- Working scaffolds
- Protecting scaffolds
- Supporting scaffolds

Each type may be erected separately and serve only one purpose. Some situations however, require a combination of two or even all three types.

Working scaffolds

As the name indicates, the working scaffold is used for working from. It holds the worker at a height which enables him to comfortably complete walls etc. when the construction has proceeded to a level that makes it difficult to work from the ground. The following is a description of two simple scaffolds used to complete walling between door and window frames. Protecting scaffolds, supporting scaffolds and a number of more complicated scaffolds and their construction will be treated in the Construction Books.

- BLOCK SCAFFOLD: This is the lowest and simplest working scaffold. It is used to raise the worker a bit higher to make it easier to build the wall up to the actual scaffold height of 1,5 m. Set the sandcrete blocks on solid, level ground and lay one or two boards across them (Fig. 1).

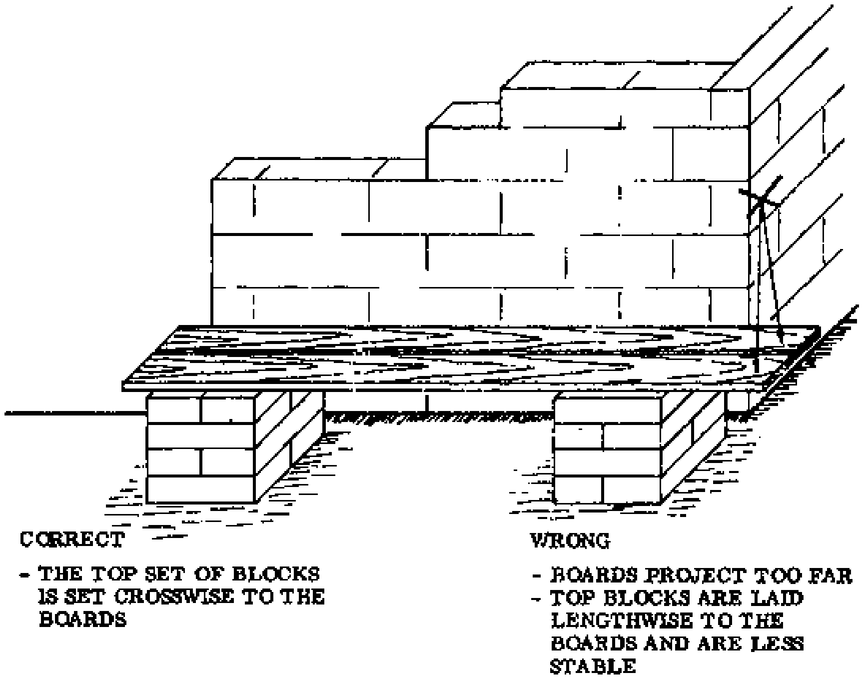

Fig. 1

- TRESTLE SCAFFOLD: This is a low-level scaffold, consisting of wooden trestles covered by two or three boards (Fig. 2). A trestle is a horizontal beam of wood with two legs on each end. Two or more of them are used to support the boards. Set them on firm, level ground, no further than 1,5 m apart. The height of the trestles can be from 75 to 100 cm. Small quantities of blocks and mortar can be kept on the platform. This scaffold enables the worker to continue walling up to lintel height, and to erect the formwork of the lintels.

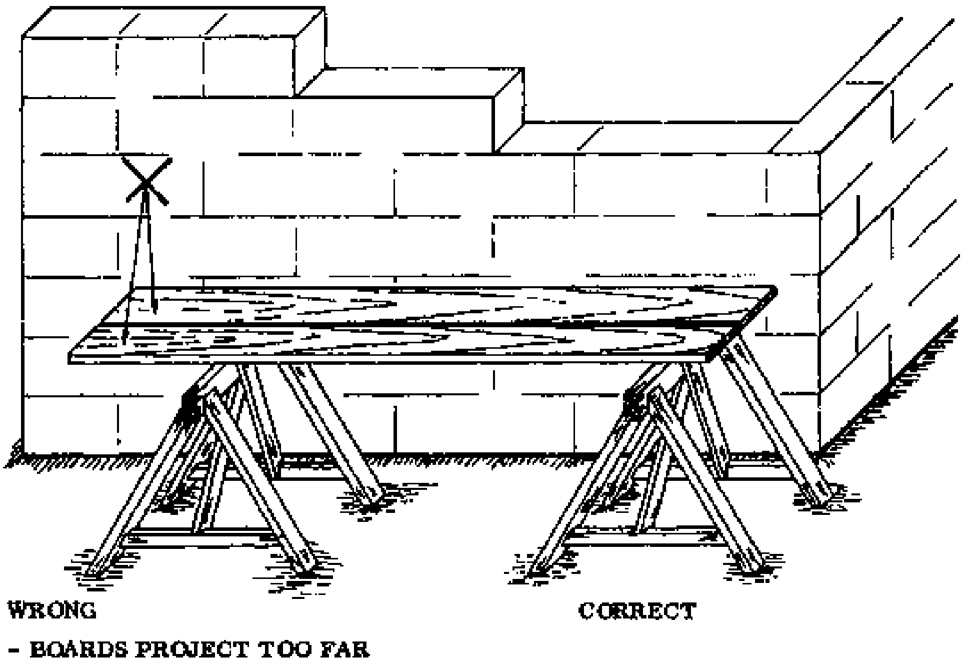

Fig. 2

NOTES:

Ladders

A ladder consists of two lengths of wood, metal or rope, called rails; which are connected at a certain distance from each other by rungs (Fig. 1).

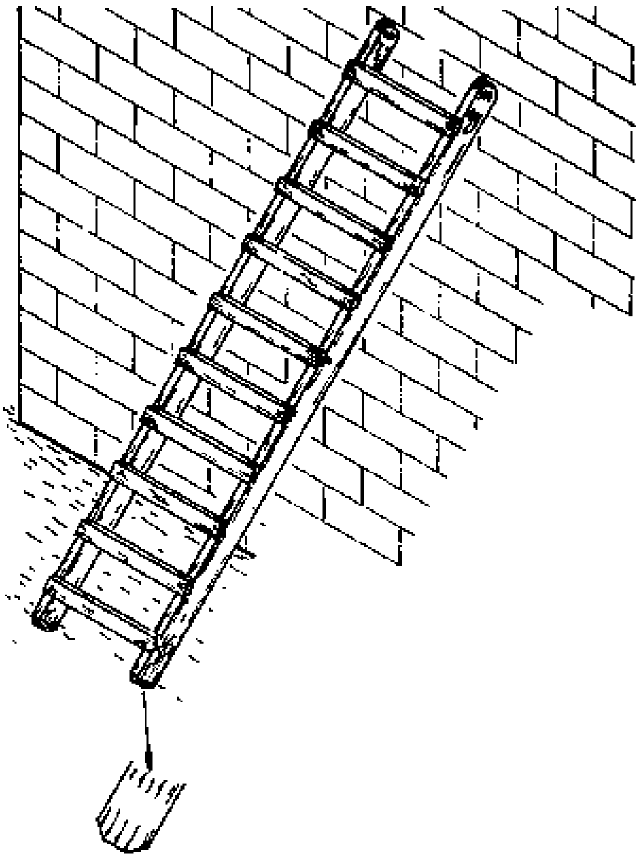

Fig. 1

Ladders are used to climb and descend scaffolds, walls, etc. during the construction of a building, and to do light maintenance work from later. Since such a piece of equipment is needed not only during the construction but also later in and around the house, it should be made from sound timber in a proper way so it can be used as a permanent ladder.

- CONSTRUCTING THE LADDER: Both the rails and rungs are made out of Odum. The dimensions of the two rails are 5 × 7,5 × 325 cm, while the ten rungs are 2,5 × 5 × 75 cm. The wood should be straight grained and planed to the above sizes.

Round the top ends of the rails where they touch the wall and cut off the foot ends as shown in Fig. 1, with a 45 degree bevel from each side. To prevent splinters and help the hands to move safely up and down the rails, round off all the edges. Incidentally, when climbing or descending ladders, keep your hands off the rungs. Grip the rear edge of the rails.

The over-all width of 75 cm gives an inside width of 65 cm which is wide enough to hold two scaffold boards on the rung. Later we will discuss making a ladder scaffold, in the Construction Book.

The distance of 30 cm between the rungs must not be exceeded, as a wider spacing would make it difficult to climb the ladder.

The rungs are inserted in notches cut in the rails, and fastened by using 75 cm nails as shown in Fig. 2.

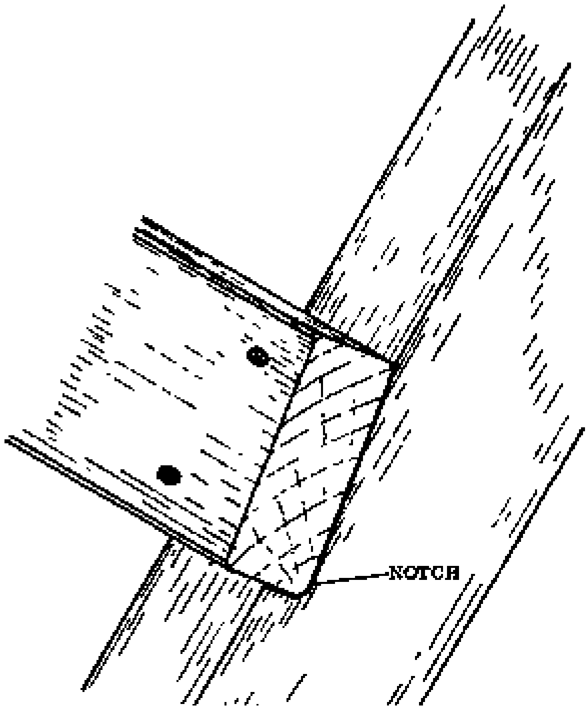

Fig. 2 ENLARGED DETAIL

Sometimes ladders are reinforced by fastening iron rods, threaded at both ends, through both rails behind the first, centre, and last rungs. The rods are held in place by nuts on the threaded ends.

- NOTE: A good ladder should be treated with oil or another preservative. Dried-out wood is the greatest threat to the safeness of the ladder. Always keep ladders in the shade when they are not in use.

NOTES:

BRIDGING OPENINGS

To bridge something means to connect the two sides or parts. This can be done in building with a structure of wood, stone, block work, steel or concrete. The essential thing is that the door and window openings must be safely bridged so that the walls above or other members of the structure cannot collapse and damage the house or the people inside.

Methods of bridging

There are various ways of bridging an opening. Which one of these is used depends on the distance to be bridged, the shape of the opening and the materials available.

One method which was common in former times was to make the openings so small that a single stone could be laid across them (Fig. 1). Openings which are low enough can also be bridged by inserting supporting blocks arranged like a “V” (Figs. 2, 3, & 4). This method is still common in the dry areas of Africa.

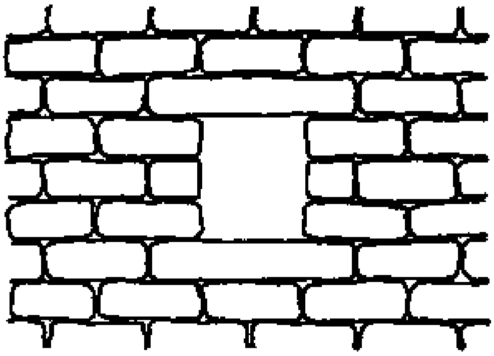

Fig. 1

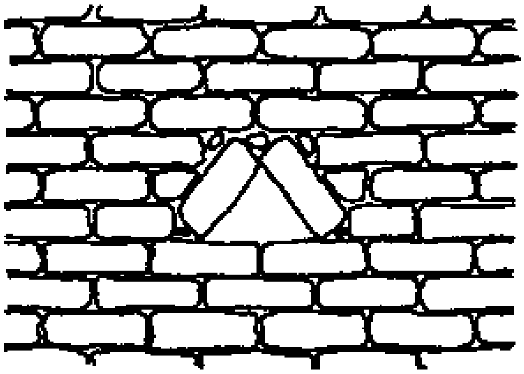

Fig. 2

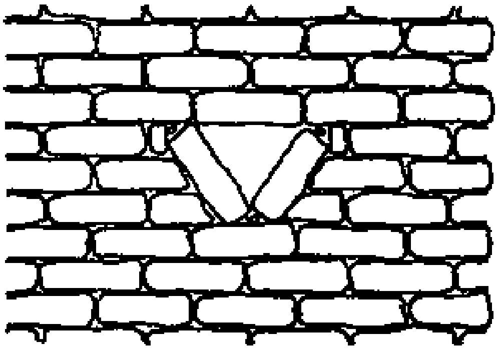

Fig. 3

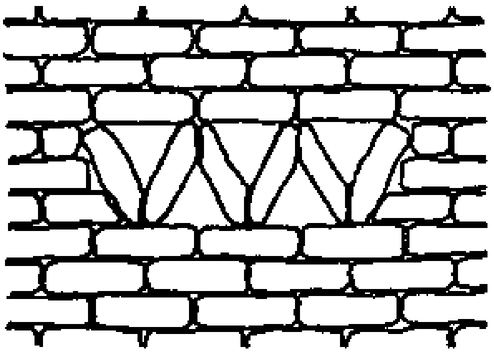

Fig. 4

The wider an opening becomes, the more difficult it is to bridge. Builders from many parts of the world eventually learned that if the blockwork remains closed above an opening, both sides of the wall will support each other, maintaining stability. This knowledge was often applied not only to bridge openings but also to construct roofs. The technique was to let each course overlap the one below until the blockwork met at the top and the two sides bonded into each other (Fig. 5).

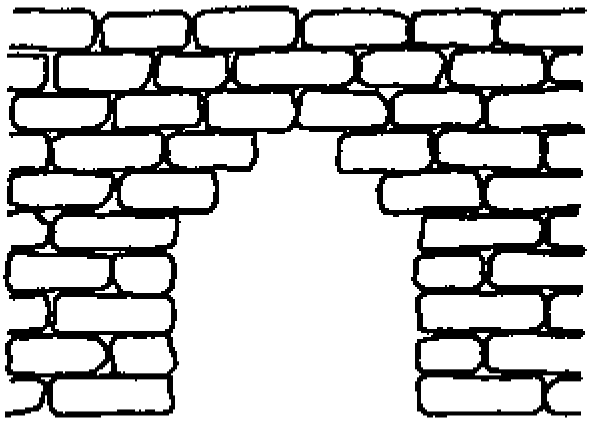

Fig. 5

From this simple method, arches were the next development. They are much stronger and have a more attractive appearance (Fig. 6).

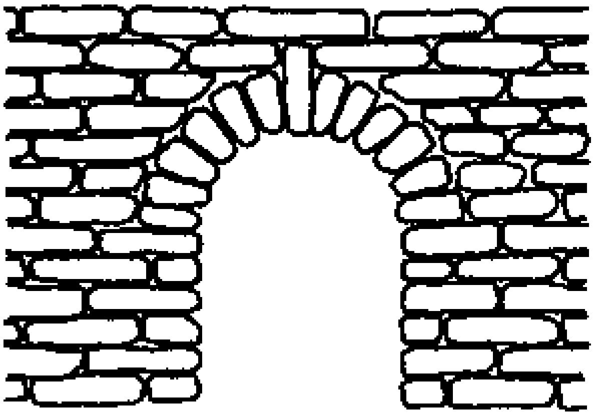

Fig. 6

Lintels were introduced in order to produce a square opening into which a frame could be fitted.

NOTES:

LINTELS

Built-up wooden lintel

A lintel, whatever material it is made from, is a horizontal member of the structure which bridges an opening (Fig. 1).

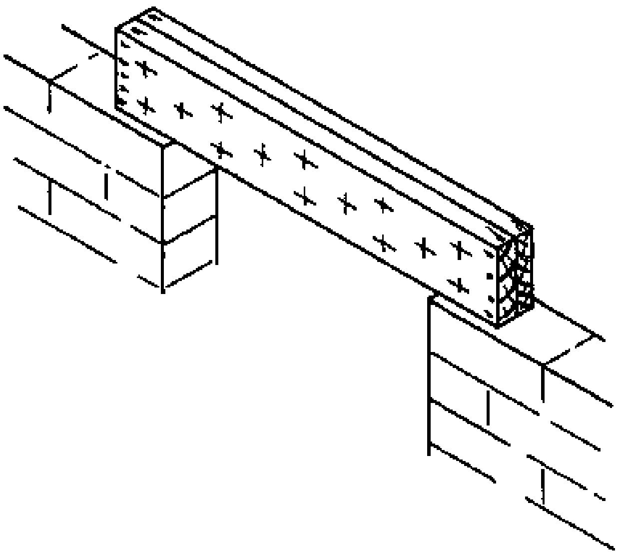

Fig. 1 BUILT-UP WOODEN LINTEL

Its function is to distribute the weight of the blockwork above and any other loads to the supporting walls. With a lintel the opening of the door or window can be lower than with an arch, and it is also easier to fit a frame into the opening.

For short-span openings such as doors and smaller windows which have no additional loads above, the wooden built-up lintel can be employed.

This lintel consists of two or more hardwood boards which are nailed, bolted or screwed together (Fig. 1). In order to save materials when a wider lintel is required, the boards are sometimes connected with spacers between them (Fig. 2).

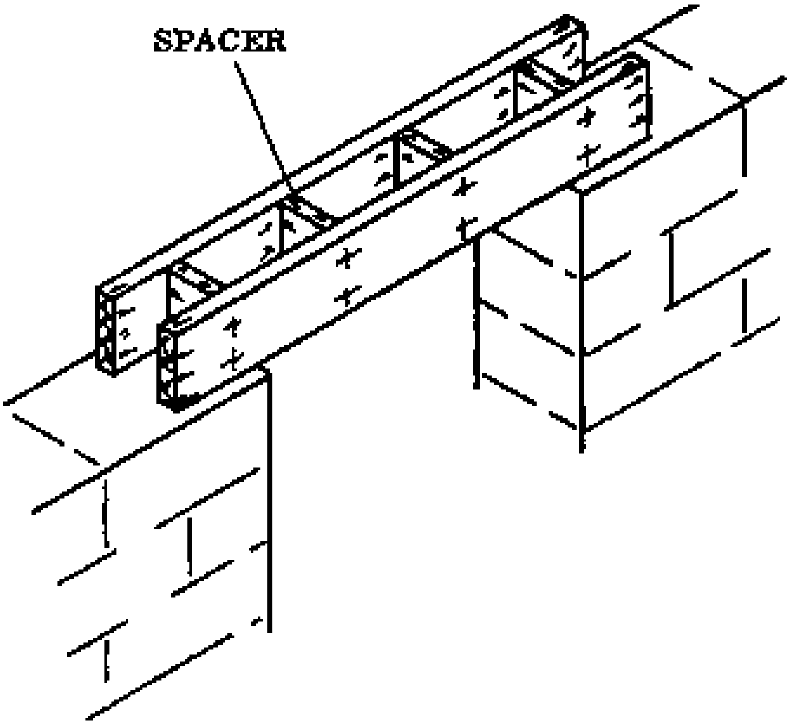

Fig. 2 WIDE BUILT-UP WOODEN LINTEL

For long-span openings and in situations where additional loads are present, arches or reinforced lintels are used.

Reinforced concrete lintel

Like the human body which is strengthened by bones, reinforced concrete is made stronger by the steel bars or metal netting embedded in it.

It is known that concrete alone can withstand enormous pressures, but if it is exposed to tensile stresses it will break (Reference Book, pages 168 & 169). Fig. 3 shows that a long board supported only on its ends will bend if weight is set on it. Similarly, a pure concrete lintel will try to bend under a heavy weight, but because the concrete is not flexible this will result in cracks forming across the soffit face, or even in collapse (Fig. 3).

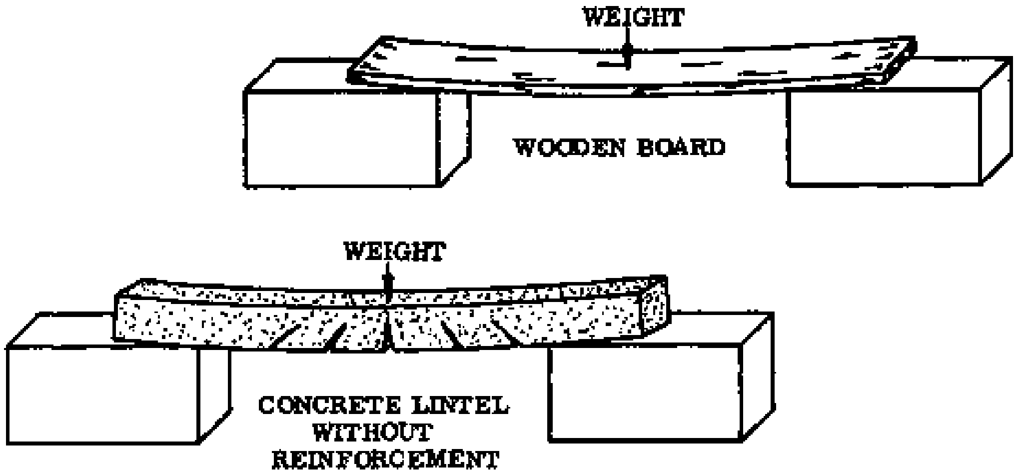

Fig. 3

To prevent this, reinforcement bars are embedded in the concrete if the lintel is expected to receive tensile stresses. The combination of concrete and steel does the job where one of them alone would not work: the concrete resists all pressure while the embedded steel resists all stresses.

The reinforcement for a lintel consists of several members with different diameters, shapes and functions. The members are often assembled beforehand in the form of so-called cages (see Fig. 1).

NOTES:

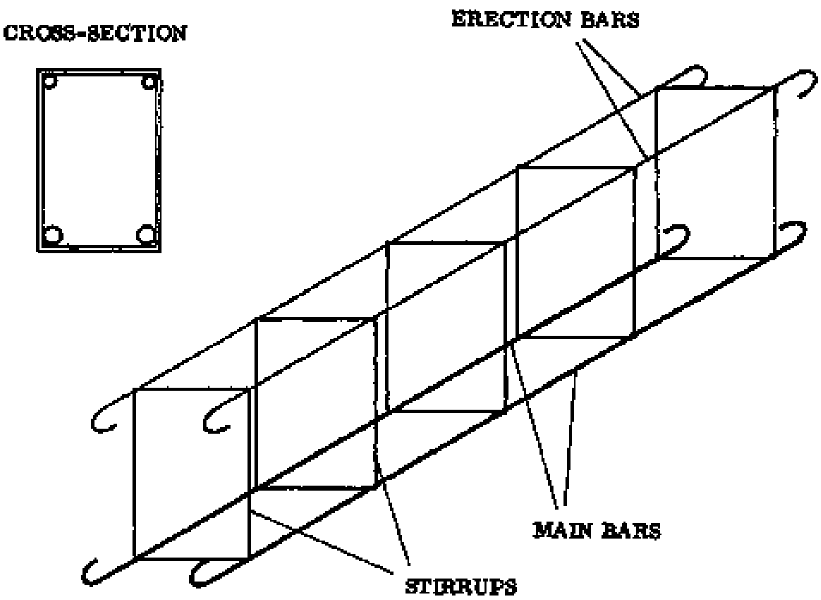

Fig. 1 REINFORCEMENT CAGE

- REINFORCEMENT CAGE: A typical reinforcement cage is shown in Fig. 1. The lower bars are the main bars. They are normally 12 mm in diameter be cause they do the actual strengthening of the lintel. The upper bars are thinner and are called erection bars. Since their main function is to hold the cage together, their diameter is only 6 mm. The square-shaped pieces are called the stirrups. They hold the main bars and the erection bars in position. All the different members are bound together with binding wire.

- CUTTING: All reinforcement bars have to be carefully measured and marked off before they are cut. A well equipped building site will have two different sized bolt cutters available. One is to cut the bars ranging from 4 to 10 mm in diameter and one is for bars up to 19 mm. If bolt cutters are not available, a hacksaw or a chisel may be used instead (Reference Book, page 19).

- BENDING: The bars are bent with the aid of the bending plate which is fixed on the work bench; and the bending bars (Reference Book, page 23). Each diameter of bar has to be bent with a specific size of bending bar.

- The bending is done according to a certain radius (this refers to the sharpness of the bend) in order to prevent overstraining and cracking of the bar (this will be explained in more detail later). The stirrups for the cages may be bent around a peg that has the same diameter as the main bars.

- BINDING: The members must be bound together in order to ensure that the bars remain in the correct positions while the concrete is being poured. Binding wire is bound around pieces at the connections (Figs. 2a & 2b). The wire should be stretched taut and then twisted tight with the pincers.

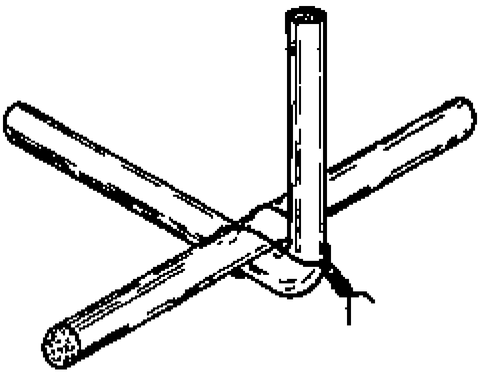

Fig. 2a STIRRUP TO MAIN BAR

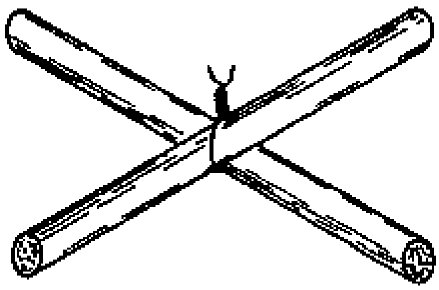

Fig. 2b BINDING OF CROSSING BARS

- NOTE: Examine the bars before you use them to make sure that they are free from paint, grease, loose scale or mud. Slight rusting will do no harm, but any loose rust should be removed.

For additional information on concrete and reinforcement steel, see the Reference Book, Materials and Products sections.

NOTES:

Formwork for a reinforced concrete lintel

The form is simply a temporary box into which the freshly mixed concrete is cast and kept until it has hardened. The inside shape of the box will be the outside shape of the concrete member.

All parts and members of a formwork used for casting reinforced concrete lintels are shown in Fig. 1 on the opposite page. The parts are nailed together in such a way that they can easily be taken apart after the concrete has hardened.

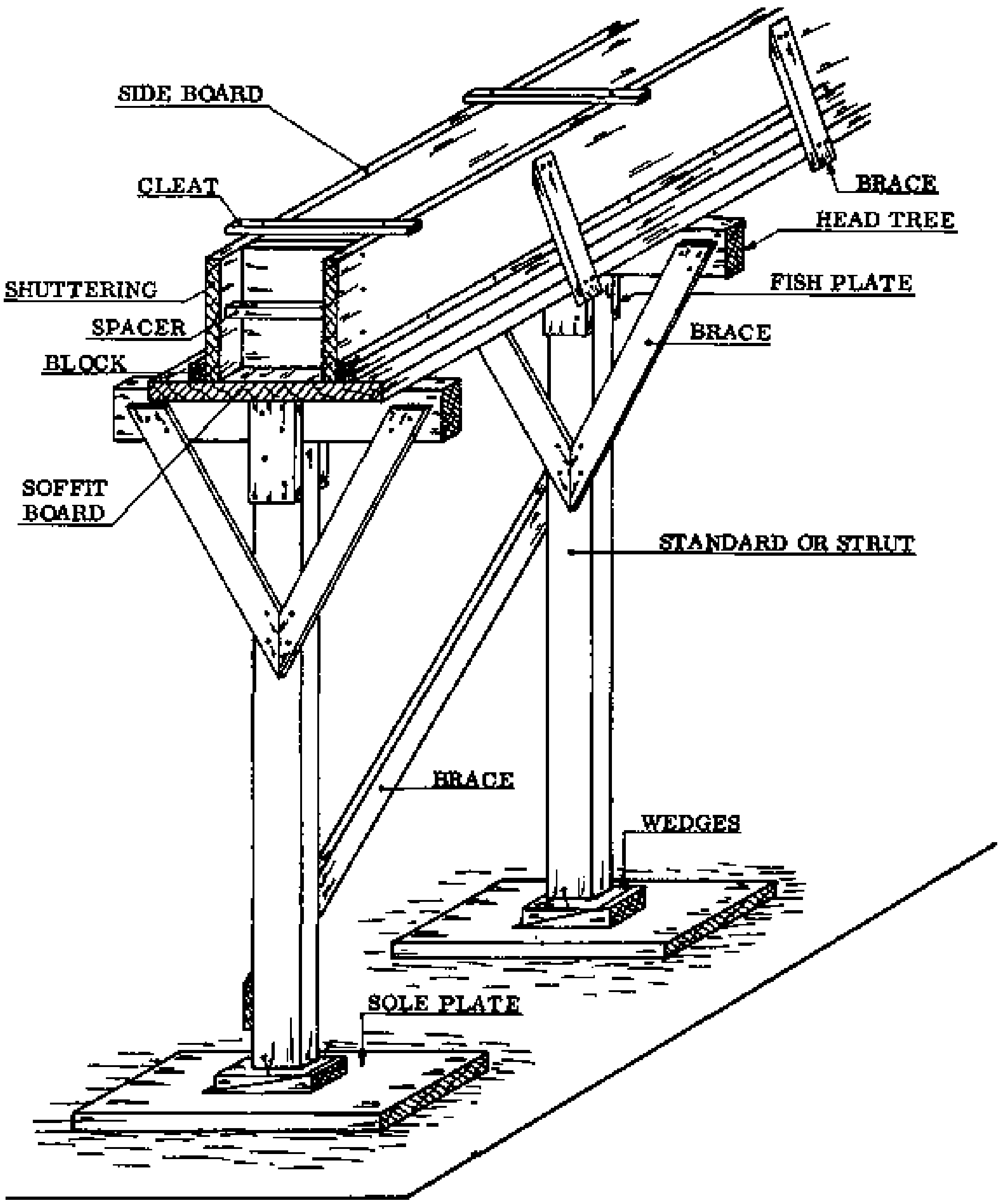

Fig. 1

Formwork is made of wood or metal and consists of two structural parts: the shuttering and the strutting.

- SHUTTERING: The shuttering is the actual shaping part of the formwork which is in direct contact with the concrete. Usually Wawa boards are used for shuttering because they are soft and light-weight, thus easy to work with.

- STRUTTING: The strutting is the supporting and bracing part of the formwork. It keeps the shuttering in position and supports both the shuttering and the concrete inside it until the concrete has set hard. Odum boards are usually used for the strutting because they are harder and stronger than the Wawa.

- CONCRETE COVER: Concrete cover, also called clear cover, is the thickness of concrete between the surface of the concrete and the nearest reinforcement bar enclosed in the concrete (Fig. 2).

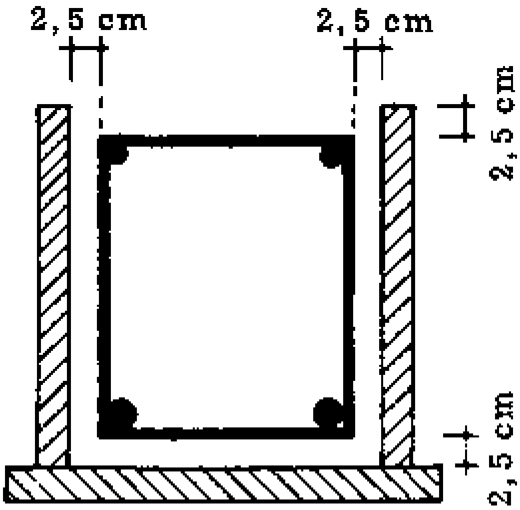

Fig. 2 CLEAR COVER

When the formwork is ready, the reinforcement cage is set into it. Spacers are attached to the bottom side of the stirrups (Fig. 3). These ensure that the reinforcement bars are correctly positioned within the concrete. The spacers are made beforehand out of cement mortar to the dimensions specified for the concrete cover thickness. A short piece of binding wire should be pressed into the fresh mortar of the spacer, so that it can be fixed properly on the rod.

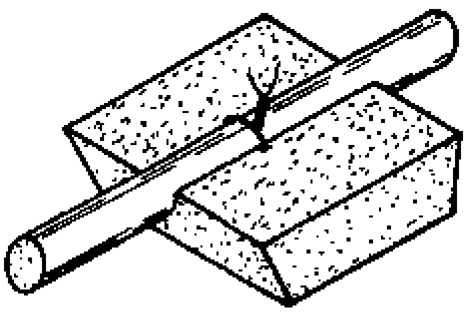

Fig. 3 DOVETAILED SPACER

There must also be spacers on the sides of the cage, to hold the stirrups away from the side boards of the shuttering.

- NOTE: When casting concrete, take care that the cage remains in position and that the concrete is well compacted around the reinforcement bars.

NOTES:

Casting reinforced concrete lintels

Concrete lintels are made in two ways. They are either cast-in-situ or they are precast.

- CAST-IN-SITU: This method is the most common one in Rural Building. The lintel is cast in situation; in the place where it is needed (Fig. 1). The advantage of this method is that no soffit board is needed for the form, because the head of the door frame acts as the bottom of the form, provided that the frame has been installed already. A further advantage is that any roof anchorage, if needed here, can easily be inserted into the reinforcement cage at the correct position.

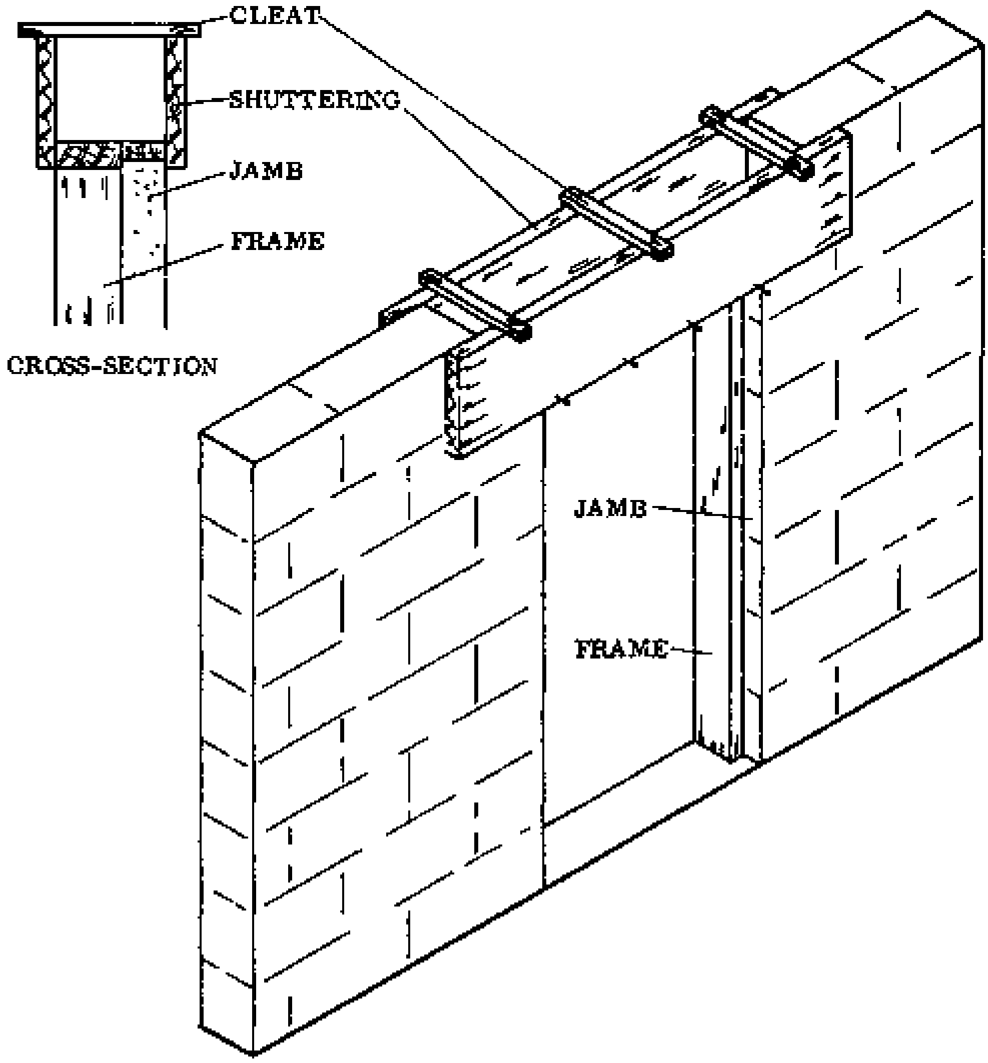

Fig. 1 CAST-IN-SITU

- PRECAST: A precast concrete lintel is a lintel which is made in advance. The formwork is on the ground and the concrete is cast there. When the construction reaches lintel height, the concrete lintel has set hard and can be set into position. The advantage of this method is that it saves time, since the wall above can be completed immediately after the lintel has been laid (Reference Book, page 137).

If several lintels have to be made, a form like the one shown in Fig. 2 can be used.

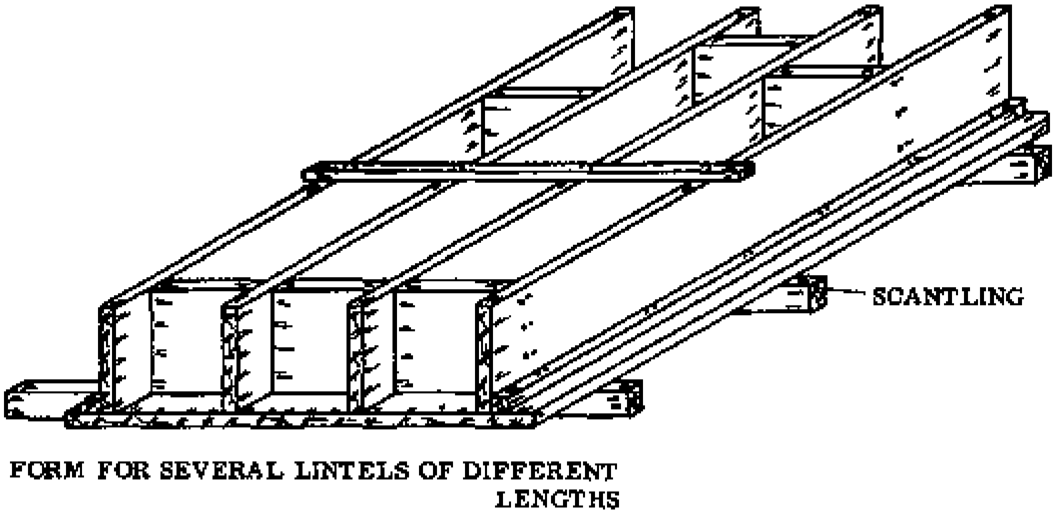

Fig. 2 PRECAST

- NOTE: Precast concrete lintels must be marked on their top face with the letter “T” to ensure that they are placed in the correct position and not upside-down.

- PREPARATION OF THE FORMWORK: No matter which of the above methods is used, the formwork has to be prepared before the concrete is cast. This involves cleaning dirt and dust from the surfaces which will be in contact with the concrete, and watering or oiling them.

The formwork must be completely sealed so that no gaps remain for the cement paste to escape. This would result in voids and weak concrete.

- COMPACTION: The concrete is filled into the formwork in layers, and compacted by tamping with an iron rod or the trowel. Tapping lightly on the formwork with a hammer also helps to consolidate the concrete.

- CURING: When the concrete is starting to get hard, the lintel must be kept wet and covered. This process is called curing and must be continued until the concrete is completely set and the formwork can be removed.

NOTES:

- STRIPPING: Stripping refers to the removal of the formwork; this has to be done carefully to avoid causing shocks or vibrations.

After the formwork is removed, clean all the parts of it and remove the nails. Stack the different parts neatly to keep them from getting bent or warped.

- STRIPPING TIME: This is the period between the casting of the concrete and the time the formwork can be stripped off. During this time the formwork containing the fresh concrete must not be disturbed, so that the concrete can set hard without any cracks forming in it.

Depending on the size, shape and position of the concrete member, the stripping time varies from 4 to 28 days.

NOTES:

ROOFS

Anchor beam

When the walling above the lintels is completed, the top of the wall may be covered with a strip of reinforced concrete, all around the outside walls of the house. This is the anchor beam, where the roof construction is anchored. It is also known as the ring beam or concrete belt.

Wall plate

For smaller spans, the Rural Builder can install a wooden wall plate instead of an anchor beam. Both of these are explained further in the section on roofs in the Construction Book.

Terms

On this page and the next page, most of the parts and members of the roof construction are mentioned. The details of roof construction are dealt with in the Construction Book.

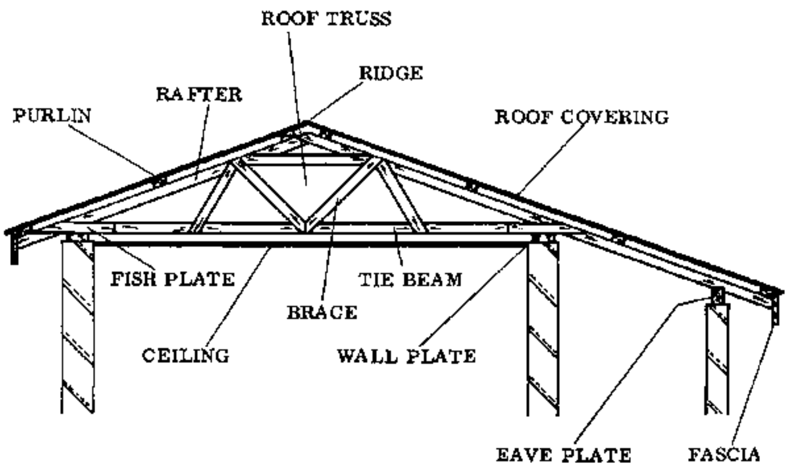

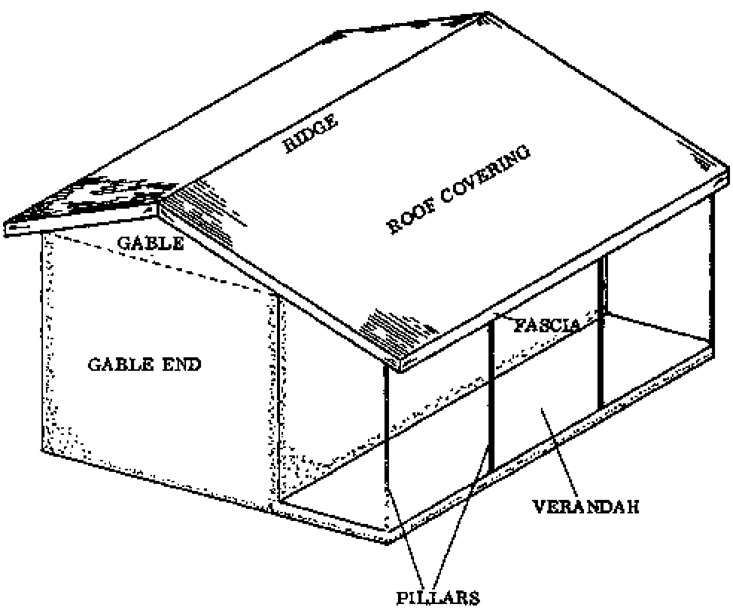

NOTES:

PLASTER - RENDER

Plaster and render are mortars with different mix proportions; they are applied to walls to protect the blocks from weather etc.

Internal surfaces are plastered; the mortar used is called plaster. External surfaces are rendered; the mortar is called render.

Functions of plaster and render

Since most of the wall consists of landcrete blocks, it has to be rendered to make it weatherproof, and to protect the blocks against rain which otherwise quickly damages them. The ideal rendering will prevent water from penetrating, will be free from cracks and will stick tightly to the wall. At the same time, the appearance of the building is improved.

The function of plaster is to give the inside walls a smooth, plain finish so that the rooms both look nice and are easily cleaned. No gaps or holes should remain for insects, spiders, etc. to find shelter in. Wet areas such as bathrooms, showers, kitchens and toilets, are plastered to protect the landcrete blocks from moisture penetration. In addition, the plaster serves as a protection against fire in buildings which are made out of a wood skeleton covered with mud (a common construction in southern Ghana).

Application

The application of the plaster can be done with one coat or two coats. Generally one coat work is done, but two coats may sometimes be required, for example when the wall is very uneven and a thick plaster coat is needed to cover the irregularities.

Sometimes a spatterdash coat is applied to the wall before the plaster, to give a good grip to the plaster. This is discussed on page 176; see also the Reference Book, page 29.

NOTES:

Plastering or rendering

Before the plaster or render is applied, the wall should be thoroughly checked to make sure that it is plumb and its surface flat. Holes and hollow parts should be filled in, and single projecting blocks must be chiselled off. The latter problem can often occur on the inside of walls due to irregularly made blocks.

The face of the wall should be free from loose dirt and dust, and it must be well dampened to reduce the absorption of moisture from the mortar.

On outside corners, so-called edge boards are fixed so that they project past the edge by a distance equal to the thickness of the coat to be applied (Fig. 1).

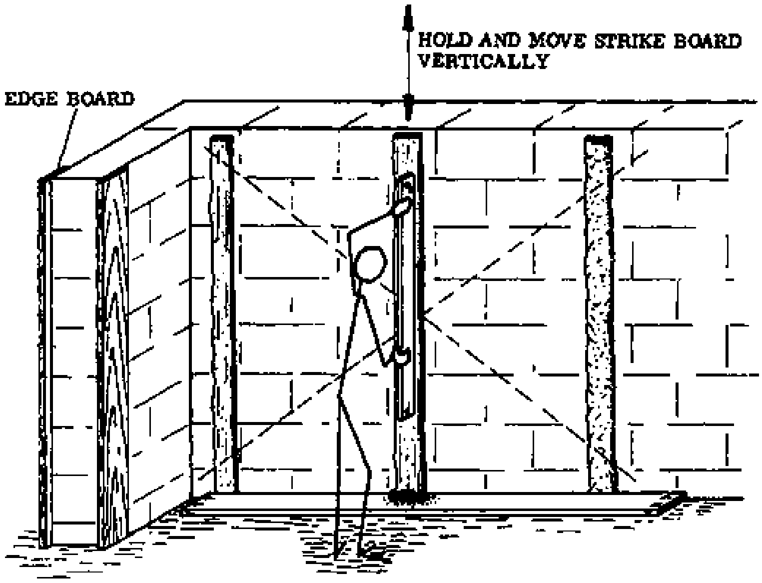

Fig. 1 PREPARATION OF SCREEDS

On inside walls and between edge boards, screeds are prepared according to the required thickness; they are situated as wide apart as the strike board (Reference Book, page 25) can readily bridge.

A screed is a strip of plaster or render which is carefully applied to the correct thickness to act as a guide for the strike board. In making the screeds, hold the strike board vertically and give it an up and down motion as you move it across, smoothing the screed (Fig. 1). The screeds will be flush with the finished surface and must be carefully plumbed and lined out (Fig. 1).

A board can be laid close along the bottom of the wall so that any mortar which is dropped can be picked up again, to avoid wasting material.

When the screeds are ready, the plaster can be applied as shown in Fig. 2. For this step the strike board is held horizontally and moved from side to side as it is pushed up the wall, smoothing the plaster.

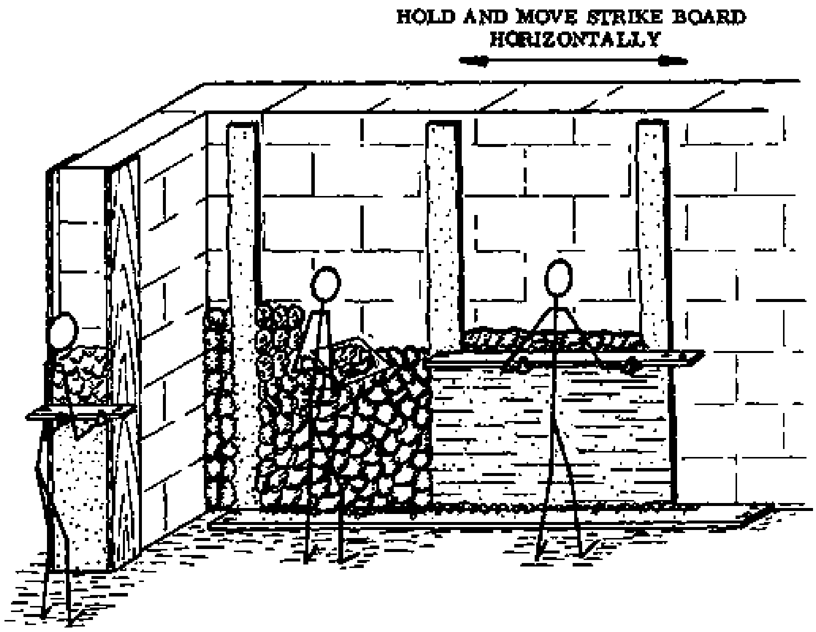

Fig. 2 APPLYING PLASTER

The aggregates

Regardless of where the sand for the plaster or render comes from, it must be clean and suitably graded (Reference Book, page 159, and pages 147 to 151).

Sand for rendering should be sharp and well graded, from fine to very coarse. The mortar may be difficult to apply, but nevertheless this is the best way to get a rendering that will not crack and let water in.

Sand for plastering should be well graded, from fine to fairly coarse; and for a finishing coat from fine to medium. Well graded sand reduces the drying shrinkage and cuts down the danger of cracking and crazing. Crazing means the formation of hairline cracks on the surface of concrete, plaster or render; usually it is caused by too much water in the mix, or by a too rich mix.

Mix proportions

In Rural Building, most of the mortars used for plaster and render are cement mortars, because lime is not always available.

The mix proportion for plaster ranges from 1:8 to 1:12, depending on the condition and grading of the sand. Both coats should have the same strength as far as possible if two coats are applied.

The mix proportion for render can vary from 1:6 to 1:10. It is generally agreed that the sides of the house which are exposed to rain should have a better mix. However, the mix proportion should never be better than 1:6, and should be adapted if possible to the strength of the background (Reference Book, pages 158 to 165).

Additional protective measures

When the plaster or render has set hard and has dried, it is advisable to paint the whole surface with emulsion paint (Reference Book, page 201).

If lime is available (Reference Book, page 152 and page 200) the walls are first white-washed to fill up the tiny holes in the surface. After this the emulsion paint is applied in two coats. The paint prevents water from penetrating into the plaster or render; reflects light and thus keeps the walls cooler, and gives the house an attractive appearance.

When emulsion paint has dried, it will not dissolve in water, so it can easily be cleaned with water and a soft brush.

- REMEMBER: Sand for plaster and render should be clean, properly graded and as coarse as is appropriate for the particular application.

Joints should be carefully raked out while the mortar is still fresh, so that the plaster or render can grip well. Another method is to apply a spatterdash to the wall to give a good grip to the plaster or render.

No coat should be richer than the coat underneath it. If you have to make two of different strengths, then the undercoat should be stronger than the finishing coat. Try to avoid making two coats of plaster or render, because it is difficult to get a good connection between the two coats. The spatterdash is not a coat, it is a background for the plaster or render.

NOTES:

__Spatterdash__

Spatterdash can be used to produce an attractive appearance, or it can be applied before plastering in order to make a good surface for the plaster or render.

Spatterdash is a wet, rich mix of cement and sand, called a slurry. This sand and cement is mixed to a proportion of 1:1,5 or 1:3. This slurry is thrown hard, or spattered, against the smooth block or concrete surface, and then allowed to harden (Fig. 1).

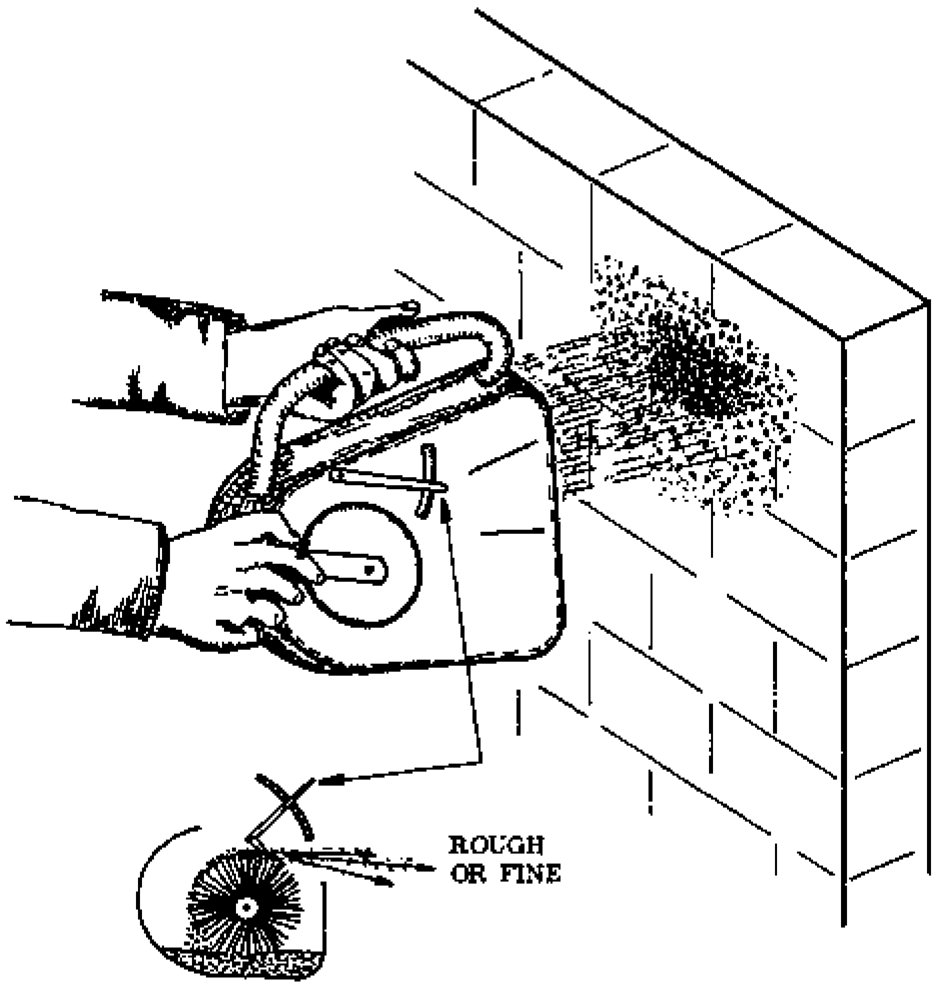

Fig. 1 & Fig. 2 FLICKER BAR

When you work with this hand operated machine (Reference Book, page 29), do not overload the machine with material. It is better to use small quantities at frequent intervals. All of the slurry must be used within 1 hour of the time it is mixed.

Do not set the flicker bar adjuster beyond the second notch when the machine is new. Only when the bar wears out should it be set to a lower notch (Fig. 2).

FLOOR CONSTRUCTION

The dry climate in the north of Ghana makes it advisable to construct the floor after the roof covering has been completed. This makes it easier to cure the concrete, and to make sure that the floor sets hard without cracking due to excessive drying. There are various methods to construct floors. In Rural Building the main ones are: one-course work, and two-course work.

One - course work

This means that the final surface finish is completed before the base layer has set hard. The result is a monolithic floor construction; which means that the floor throughout can be considered as one solid mass (Fig. 1). The advantage of this method is the short construction time, using a minimum of materials, and no separation between the top layer (screed layer) and the base layer.

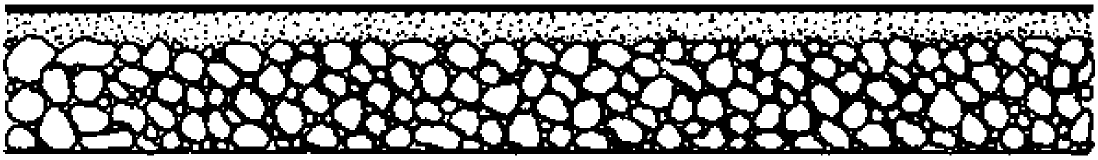

Fig. 1 ONE - COURSE WORK

Two - course work

This means that the base layer and the finish layer are constructed separately. After the base layer has set hard, a floor screed is applied. This is a fine-grained mortar layer, about 2 cm thick, laid to finish the floor surface (Fig. 2).

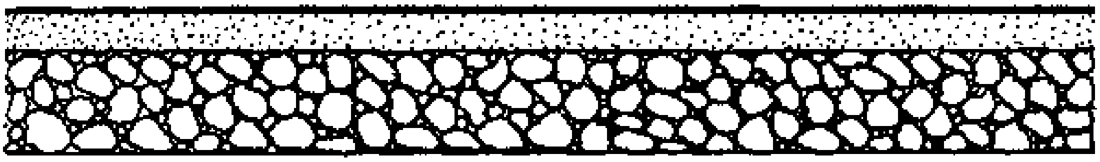

Fig. 2 TWO - COURSE WORK

The advantage of this method is that any faults in the base layer, such as cracks, can be covered. However, it takes longer to construct and requires more cement. Another disadvantage is that it can be difficult to get a good connection between the base layer and the floor screed. The base layer should be carefully treated with cement and water to form a good connection between the floor screed and the base layer.

Casting methods

If a floor area is larger than approximately 10 square meters, the area should be divided into bays for concreting. A bay is one of several uniform divisions of a concrete floor which are cast at any one time.

The bays are separated by edge boards, which are laid and levelled to the required floor thickness. The edge boards act as a guide for the strikeboard to level off the concrete surface, therefore they must be laid and levelled with great care.

On the drawing below you can see the positions of the edge boards when the floor is divided into six bays. The boards should be arranged as shown so that the corners of the concrete bays will match each other when the floor is complete.

The division of the floor into bays helps to prevent the development of cracks due to shrinkage during the hardening process. The smaller the area, the less the shrinkage, and the fewer cracks will appear. Square-shaped bays are the best because all the sides will shrink by the same amount.

Bays also make the construction process easier. The bays are small enough to be cast, levelled and finished within a manageable time. The work can be interrupted to allow the already completed bays to harden. Then the edge boards are removed and the empty bays are cast, using the completed ones as a guide. Once you start casting a bay, it must be completed. Never interrupt a concreting process, as this can result in a faulty bond and the joint will always be visible. For the sequence of operations for casting a floor see Figs. 1 to 8 on the following two pages.

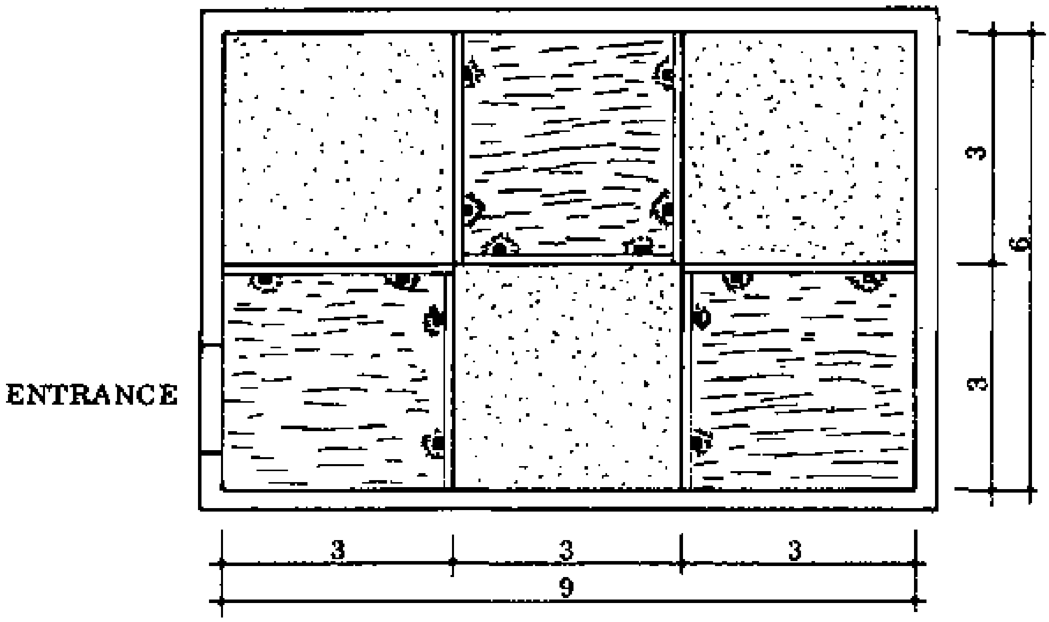

DIVISION INTO BAYS

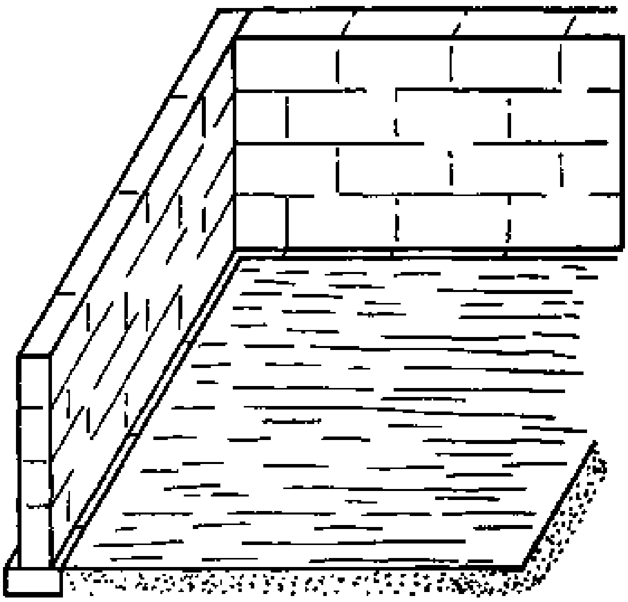

Fig. 1

- CLEAN THE AREA

- CLEAN THE EDGES OF THE FOOTINGS

- LEVEL THE AREA WITH A SHOVEL

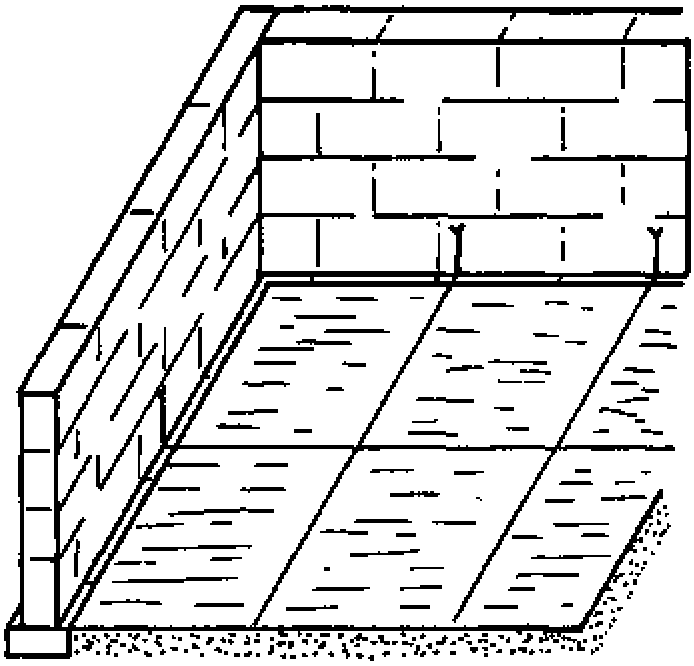

Fig. 2

- MARK THE BAYS ON THE WALLS

- SET OUT THE POSITIONS OF THE EDGE BOARDS ON THE GROUND

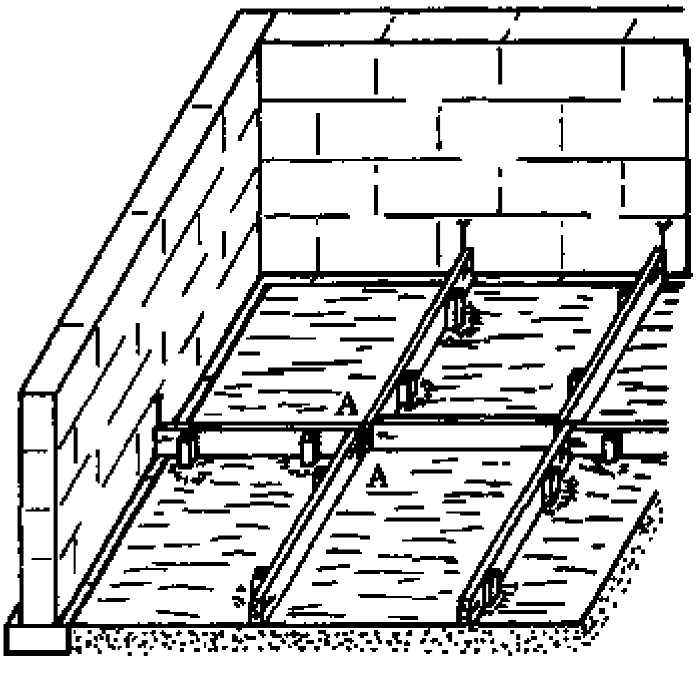

Fig. 3

- FIX THE EDGE BOARDS WITH PEGS

- LEVEL THE TOPS OF THE EDGE BOARDS

- THE CORNERS SHOULD MATCH (A to A)

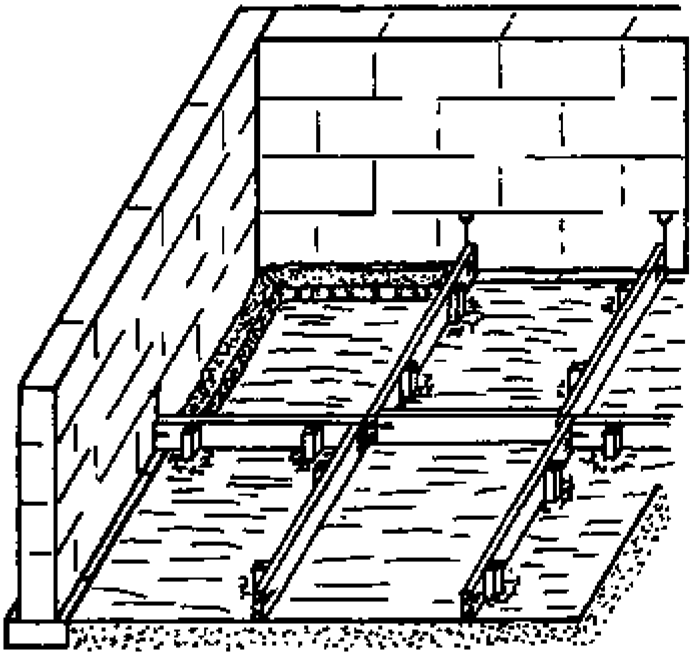

Fig. 4

- POUR GUIDE STRIPS TO THE HEIGHT OF THE BASELAYER

- LEVEL THE GUIDE STRIPS

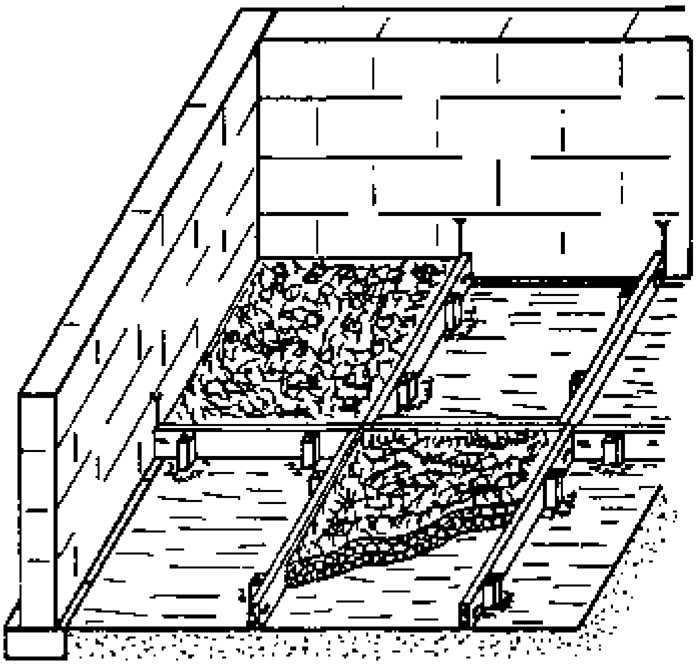

Fig. 5

- POUR THE BASE LAYER AND TAMP IT DOWN WITH THE RAMMER TO THE REQUIRED LEVEL

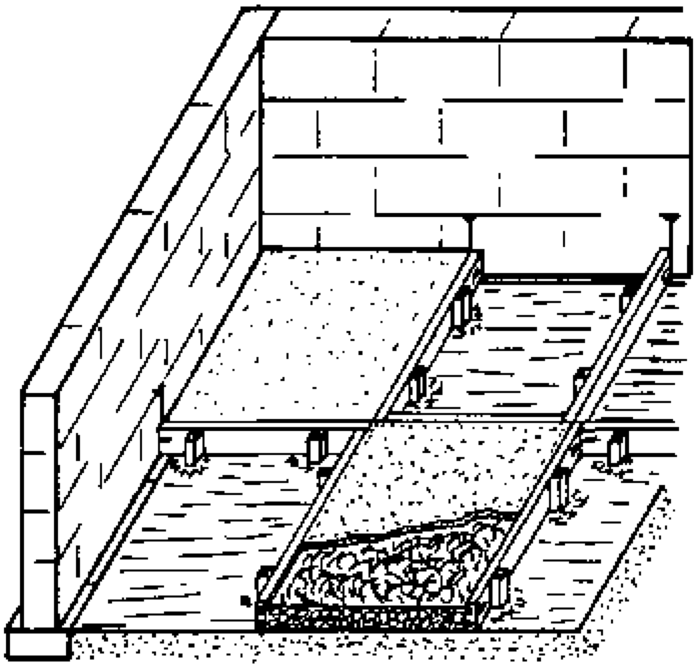

Fig. 6

- LAY THE FLOOR SCREED LAYER (FAIRLY DRY MIX) AND TAMP IT DOWN WITH THE WOOD FLOAT UNTIL MOISTURE COMES THROUGH

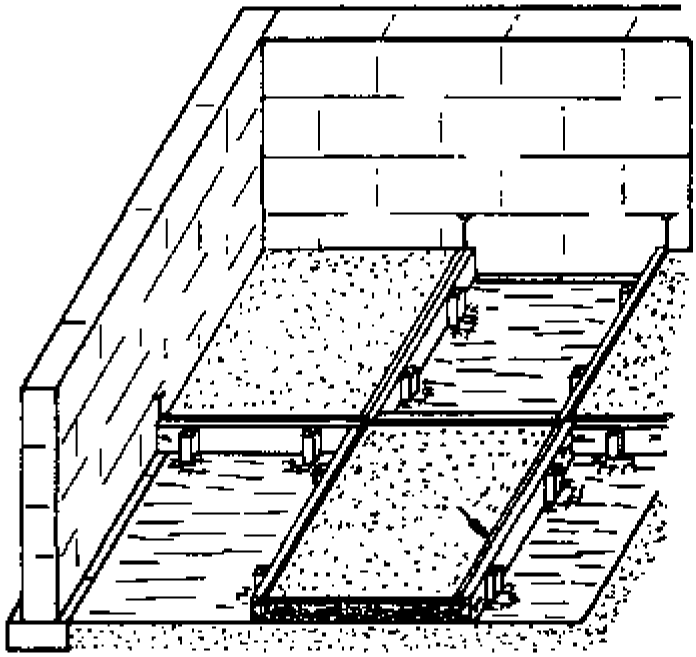

Fig. 7

- FINISH OFF THE TOP WITH THE TROWEL OR STEEL FLOAT

- MAKE A BEVEL ALONG THE EDGES FOR THE SHRINKAGE JOINTS (ARROW)

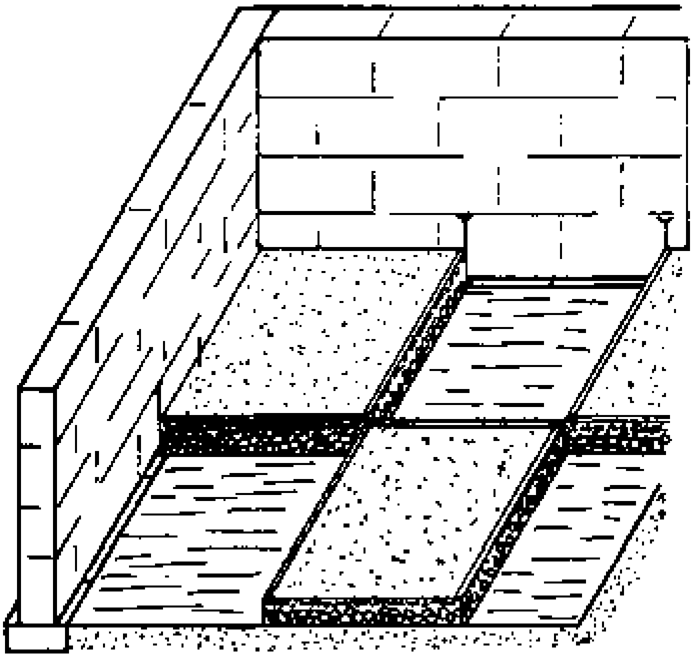

Fig. 8

- TAKE AWAY THE EDGE BOARDS AND PUT SAND ON TOP OF THE FLOOR

- WATER THE FLOOR REGULARLY

Shrinkage gaps

When one set of bays has hardened, the edge boards are carefully removed and the remaining bays can be cast. Shrinkage gaps are made between the adjoining bays. This is done by placing plastic or paper between the bays when the second set of bays is cast, so that the bays are kept separate from each other.

The shrinkage gaps allow the concrete bays to shrink a bit as they harden without cracking. This type of gap is used where the floor is not exposed to the sun or to great temperature changes; usually only for inside floors. Shrinkage gaps can be made in either one-course work or two-course work. A “V” is made along the top edges of the gap to improve the appearance of the floor (Fig. 1).

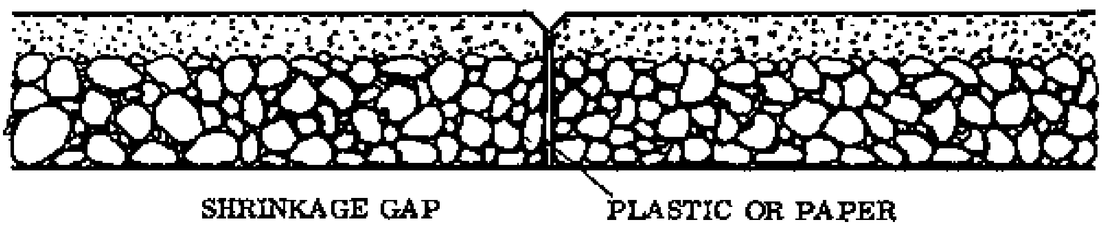

Fig. 1 SHRINKAGE GAP

Expansion gaps

Where the floor is exposed to the sun, as in a verandah floor or any concreted area outside the house itself, expansion gaps have to be made. In this case the edge boards are not removed until all the bays have been cast and hardened. The boards are then removed and the gap between the bays is filled with wet sand, and the floor screed is applied over the top

(Fig. 2). Expansion gaps can only be made in two-course work.

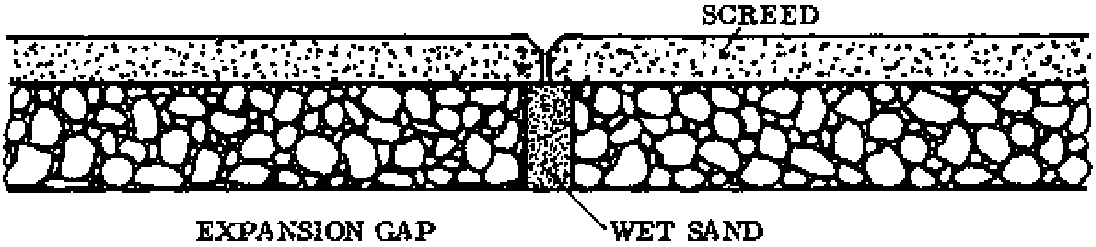

Fig. 2 EXPANSION GAP

The expansion gap allows the floor to expand and contract with the temperature changes without forming cracks. Expansion occurs when the floor is heated by the sun during the day, and shrinkage occurs at night when it cools down. Floors exposed to the sun should be divided into bays of no more than 5 square metres, and expansion gaps should be made in them. The floor screed must also be provided with a shrinkage gap; this should be located directly above the expansion gap in the base layer (Fig. 2).

A WORD FOR THE TRAINEE BEFORE ON-THE-JOB TRAINING

With the basic knowledge you have gained in this part of the course, you should now be prepared to go to a building site for on-the-job training.

Remember that so far you have covered only the first part of the course. You will still need to acquire much more knowledge and many more skills before you can be called a Rural Builder.

While you are working at the building site, remember that this time is also supposed to be a learning experience. If you want to learn, you have to ask questions about how and why certain things are done. If you can’t get your questions answered at the time, write them down and bring them to your instructors for explanation. It is a good idea to keep a notebook; writing down in it the methods you applied at the building site, the time that a certain operation required, the materials used and how much was needed, and any ideas you have about how it could have been done differently.

You should occasionally review the information in this book, especially as it comes up on the job. Don’t be afraid to use the book and to write notes in it; the notes which you make at this time can be very helpful to you later on, when you have finished the course and are working as a builder.

NPVC

RURAL BUILDING

REFERENCE BOOK

PREFACE

This official text book is designed purposely to meet the needs of trainees who are pursuing rural building courses in various training centres administered by the National Vocational Training Institute.

The main aim of this book is to provide much needed trade information in simple language and with illustrations suited to the understanding of the average trainee.

It is the outcome of many years of experiment conducted by the Catholic F. I. C. brothers of the Netherlands, and the German Volunteer Service instructors, in simple building techniques required for a rural community.

The National Vocational Training Centre is very grateful to Brothers John v. Winden and Marcel de Keijzer of F.I.C. and Messrs. Fritz Hohnerlein and Wolfram Pforte for their devoted service in preparing the necessary materials for the book; we are also grateful to the German Volunteer Service and the German Foundation For International Development (DSE) - AUT, who sponsored the publication of this book.

We are confident that the book will be of immense value to the instructors and trainees in our training centres.

DIRECTOR: National Vocational Training
Institute, Accra

INTRODUCTION TO A RURAL BUILDING COURSE

Vocational training in Rural Building started in the Nandom Practical Vocational Centre in 1970. Since then this training has developed into an official four year course with a programme emphasis on realistic vocational training.

At the end of 1972 the Rural Building Course was officially recognised by the National Vocational Training Institute. This institute guides and controls all the vocational training in Ghana, supervises the development of crafts, and sets the examinations that are taken at the end of the training periods.

The Rural Building programme combines carpentry and masonry, especially the techniques required for constructing housing and building sanitary and washing facilities, and storage facilities. The course is adapted to suit conditions in the rural areas and will be useful to those interested in rural development, and to farmers and agricultural workers.

While following this course, the instructor should try to foster in the trainee a sense of pride in his traditional way of building and design which is influenced by customs, climate and belief. The trainee should also be aware of the requirements of modern society, the links between the old and new techniques, between traditional and modern designs - and how best to strike a happy medium between the two with regard to considerations like health protection, storage space, sewage and the water supply. The trainee should be encouraged to judge situations in the light of his own knowledge gained from the course, and to find his own solutions to problems; that is why this course does not provide fixed solutions but rather gives basic technical information. The instructor can adapt the course to the particular situation with which he and the trainee are faced.

This course is the result of many years of work and experimentation with different techniques. The text has been frequently revised to serve all those interested in Rural Development, and it is hoped that this course will be used in many vocational centres and communities. It is also the sincere wish of the founders of this course that the trainees should feel at the completion of their training that they are able to contribute personally to the development of the rural areas, which is of such vital importance to any other general development.

We are grateful to the Brothers F.I.C., the National Vocational Training Institute and the German Volunteer Service for their assistance and support during the preparation of this course.

Bro. John v. Winden (F.I.C.)
Wolfram Pforte (G. V. S.)
Fritz Hohnerlein (G.V.S.)

LAY-OUT OF THE RURAL BUILDING COURSE

The Rural Building Course is a block-release-system course, which means that the trainee will be trained in turn at the vocational centre and at the building site. The period of training at the centre is called "off-the-job" training, and the period on the building site is called "on-the-job" training. Each will last for two years, so that the whole course will take four years and will end with the final test for the National Craftsmanship Certificate.

<u>BLOCK RELEASE SYSTEM</u>

YEAR	TERM 1	TERM 2	TERM 3
1	X	X	X
2	O	O	O
3	O	X	O
4	X	O	X

X = OFF-THE-JOB TRAINING
O = ON-THE-JOB TRAINING

The total "off-the-job" training period is approximately 76 weeks, each week 35 hours. During this training about 80% of the time is spent on practical training in the workshop. The remaining 20% of the time is devoted to theoretical instruction.

The total "on-the-job" training period is approximately 95 weeks, each week 40 hours. During this period the trainee does full-time practical work related to his course work. In addition some "homework" is assigned by the centre and checked by the instructors.

A set of books has been prepared as an aid to the theoretical training:

A - Rural Building, Basic Knowledge (Form 1)
B - Rural Building, Construction (Forms 2, 3, 4)
C - Rural Building, Drawing Book (Forms 1, 2, 3, 4)
D - Rural Building, Reference Book

All these books are related to each other and should be used together. The whole set covers the syllabus for Rural Building and will be used in the preparation for the Grade EL, Grade I, and the National Craftsmanship Certificate in Rural Building.

CONTENTS

BOOK INTRODUCTION

Rural Building Tools, Maintenance of Tools, Materials and Products is a reference book. This means that you should not read it through at once like a textbook, but use it when you need to look up information about certain tools, about the maintenance of a tool, or about a kind of building material or building product.

This book is divided into 4 parts:

PART 1: RURAL BUILDING TOOLS

This part of the book covers the basic tools needed in Rural Building and how to use them. It also treats a variety of site tools, site equipment and some optional tools.

PART 2: MAINTENANCE OF TOOLS

This section is about how to maintain the tools, so that they work better and last longer,

PART 3: RURAL BUILDING MATERIALS

This part deals with building materials; both the traditional ones and modern ones, that are used in Rural Building.

PART 4: RURAL BUILDING PRODUCTS

This part of the book covers the products such as reinforcement steel, blocks, paint, sheet materials, roofing sheets etc. used in Rural Building.

It is very important that you know all the technical terms, so if you come across a word or term that you don't understand you should look it up in the glossary at the end of this book, where most of the technical terms are explained. If you can't find the word in the glossary, write it down and ask your instructor to explain it.

The Tables of Figures in Appendix I are intended to help you to figure out the amounts of building materials that will be required for the planned building.

GENERAL RULES FOR SAFETY

1. Give all your attention to the job and don't distract others.

2. Be sensible in your behavior, don't play with tools or run about the building site or workshed.

3. Be alert, watch out for any dangerous situations, warn your colleagues, and report it to the person in charge.

4. If you are not sure of the correct way to use a tool, ask your instructor.

5. Make sure that your workpiece is safe and securely fastened in place before you start cutting or any work.

6. When cutting wood, guide the cutting tool in the correct way and keep your hands away from the cutting edge. Always cut away from yourself.

7. Wear safety goggles when cutting blocks, breaking concrete or grinding tools.

8. Carry tools with the pointed ends down.

9. When you finish working with a tool, clean it and return it to the toolbox.

10. Never throw or drop tools.

11. Keep the place tidy. A workplace scattered with tools is dangerous.

12. Maintain your tools, work only with clean and sharp tools.

13. A good quality, well maintained tool can do half the work for you.......

NOTES:

PART 1: RURAL BUILDING TOOLS

During thousands of years of development, people became aware that making certain things and doing certain jobs requires the use of special tools. Technical tasks could not be done with bare hands alone.

To make the things that they wanted, people were forced to design and make different tools for different jobs. For example, without tools like the plough, the farmer would not be able to feed his family. The plough was invented to make his work easier and to make sure that he could harvest a surplus of food for the benefit of the whole society. The plough was invented step by step and adapted to serve under different conditions.

In the same way, tools are very important in building. They enable people to shape all kinds of materials into useful articles and to make improved shelters to protect them from the weather and from enemies.

Early tools were the axe and the cutlass, which allowed men to cut wood for building instead of breaking it, and to make things like ladders, wheels and stools.

Now the Rural Builder uses more advanced tools and it is necessary for him to learn how to use and treat these tools well, because they are valuable. Even the most skilled craftsman can do little or nothing without the proper tools.

Since the Rural Building trade combines the crafts of carpentry and masonry, the Rural Builder's set of tools must also be a combination of masonry and carpentry tools.

This combined set of tools is limited and adapted for building in rural areas. It will enable the Rural Builder to construct perfectly well the kind of living quarters that are needed in the Northern and Upper regions of Ghana, starting from the foundation to the last nail of the roof construction.

Due to the structure of this course it is convenient to introduce the masonry tools first.

NOTES:

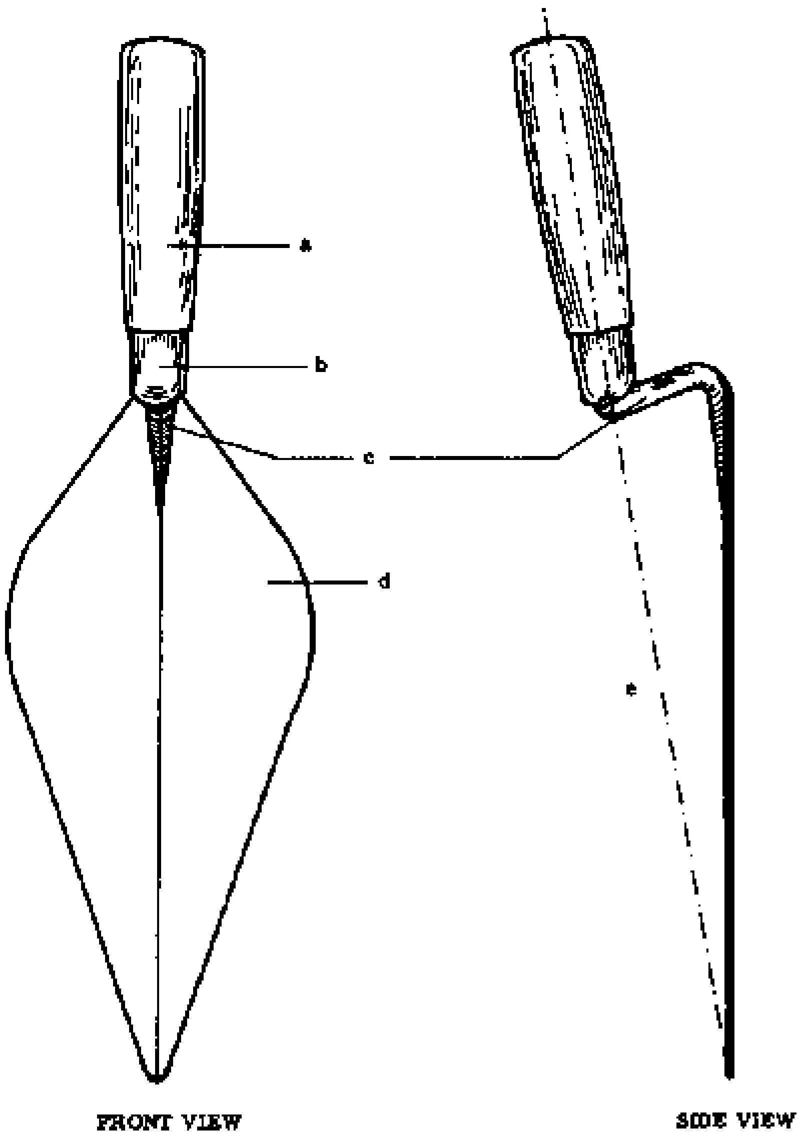

Fig. 1

NEVER CUT SANDCRETE BLOCKS WITH A TROWEL, AS THIS WILL DENT THE EDGE OF THE BLADE.

LAYING TOOLS

THE TROWEL

Of all the tools that a blocklayer uses, the brick trowel is by far the most important one, for it is almost continuously needed during the building construction.

Its main function is to pick up the mortar and to spread it to an even thickness in preparation for laying the blocks. Apart from its use in the trimming of landcrete blocks, the trowel is needed for any work where mortar or concrete is worked up.

NOTE: Never cut sandcrete blocks with a trowel, as this will dent the edge of the blade.

The long narrow-bladed trowel shown in Fig. 1 is very popular in this country and it is most frequently used for laying blocks and trowelling floorscreeds.

This trowel consists of a wooden handle (a) connected by a ferrule (b) to the shank (c) which joins the steel blade (d). The size of the blade ranges from 23 to 36 cm in length; this dimension being measured from the back of the shank to the tip of the blade, while the width varies from 9 to 13 cm.

The extended axle line of the handle (e) should line up with the tip of the blade in order to provide the best handling. This applies to all types of brick trowels.

When you buy a trowel, make sure that the blade is of a good quality steel. You can judge this quality by knocking your fingernail on the blade. The higher the sound the harder the steel.

The blade should also be able to bend slightly and return to its original position. If not, the blade is too soft.

NOTES:

WOODEN SPIRIT LEVEL

Fig. 1

METAL SPIRIT LEVEL

Fig. 2

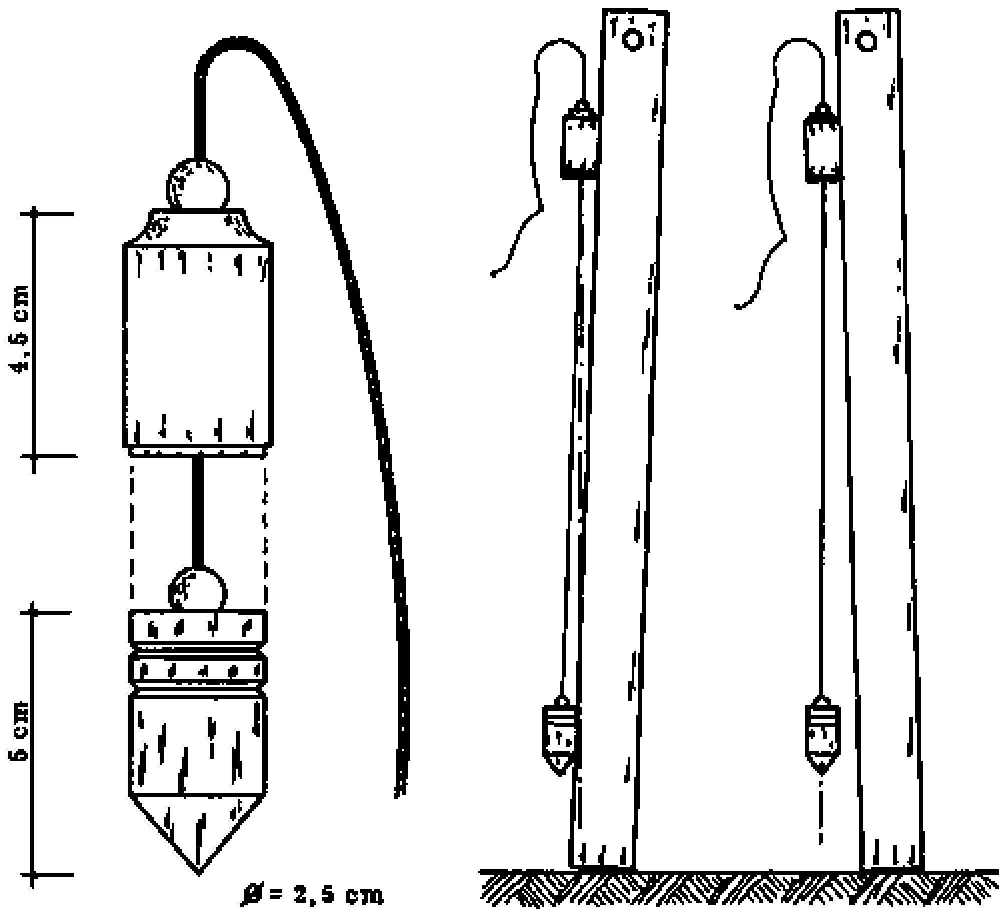

PLUMB BOB TOUCHING FLYING

STRAIGHTENING TOOLS

There are four main straightening tools.

SPIRIT LEVEL

These are wooden or metal straight edges specially fitted with plastic tubes containing spirit and a bubble of air.

These tubes are set into the straight edge so that when it is placed across two points which are level to each other, the air bubble will be exactly in the centre of the tube. This position is clearly marked with lines inside the tube (Figs. 1 & 2).

In a similar way, a tube is set in the straight edge to read with the level held vertically, which enables you to plumb members over short distances. If the level is used in conjunction with a straight edge you can plumb or level over a longer distance.

To level a longer horizontal distance you cannot use a straight edge with a level. Instead you have to use a water level which will be explained later. To level a vertical distance which is longer than your straight edge you can use your plumb bob.

PLUMB BOB

This tool consists of a solid brass or metal cylinder with a pointed end, which is attached to a suspending line so that its tip is always pointing vertically down. Its upper part is a small wooden block with a hole drilled in its centre so that the line with the cylinder on it can be pulled up or lowered down through the hole.

The diameter of the wooden block is slightly greater than the diameter of the cylinder, so that the cylinder can move freely up and down without touching the workpiece. The dimensions of the plumb bob are shown in Fig. 3.

The main use of the plumb bob is as a more accurate replacement for the vertical spirit level and also to transfer points down vertically in marking. Both methods will be described later.

NOTES:

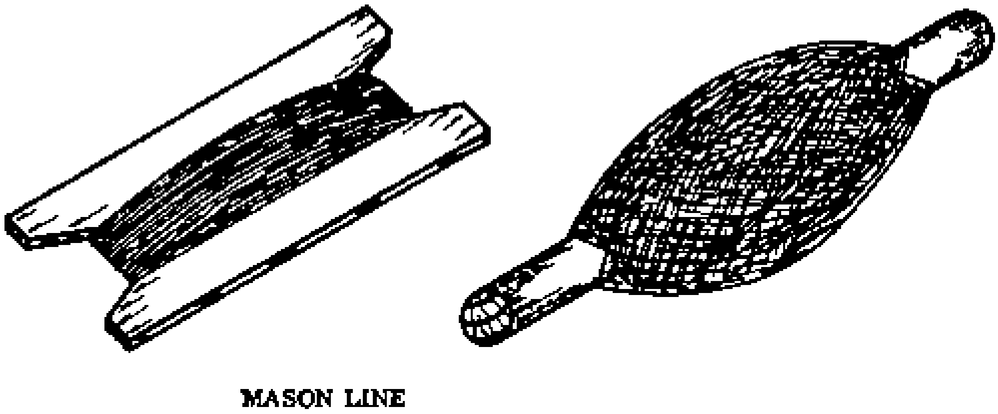

Fig. 1

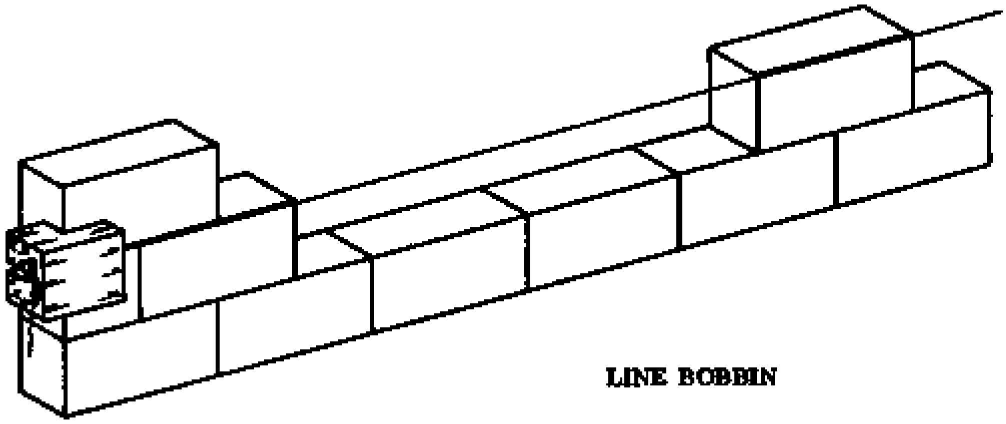

Fig. 2

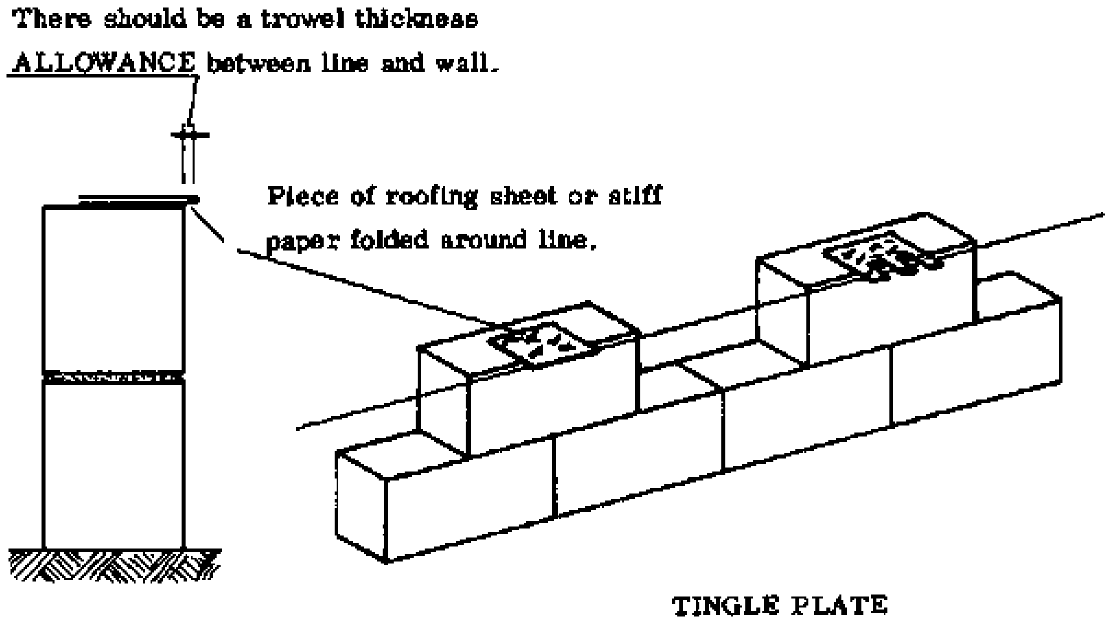

Fig. 3

MASON LINE

When building up walls between two quoins we employ the mason line, which is approximately 30 metres long, to ensure that the courses are straight and at the correct height (Fig. 1).

The line is tightened between two nails driven into the bed joints.

Mason lines are also used for setting out buildings, lining out frames for doors and windows and many other purposes where a straight line is needed for a guide over longer distances.

Instead of nails, so-called line bobbins may be used. These are hard wood blocks made to the size and shape indicated in Fig. 2. The line is stretched between opposite quoins, passed through the sawcut of each bobbin and wrapped around the projecting screws. Their uses will be explained later.

Line bobbins are preferred to nails, as they are easily adjusted to the required level and no holes need to be made in the bed joints.

In addition to the mason line, a tingle plate must be used if the distance between the quoins becomes too great and the line starts to sag. A tingle plate is made from thin metal and it is used to support the line in the middle to prevent sagging. The tingle plate must of course be set at the correct height (Fig. 3).

A tingle plate can easily be made from a piece of roofing sheet or any other sheet metal. Sometimes a piece of stiff paper is used for the purpose.

If the line breaks, it should be spliced and not tied with a knot, because a line full of knots will not be straight.

NOTES:

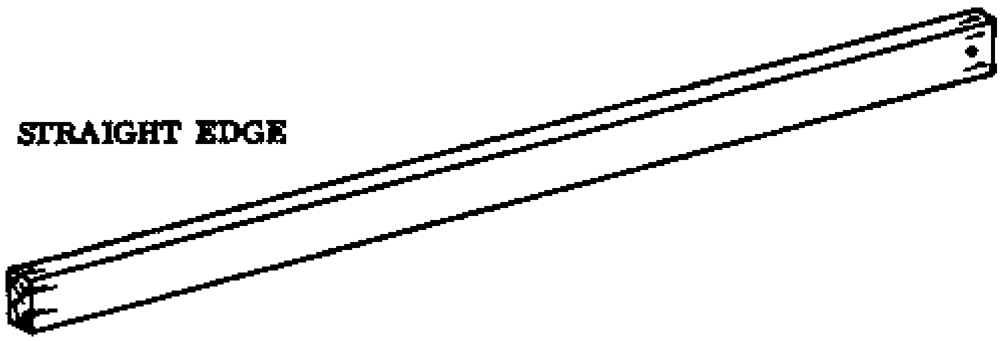

Fig. 1

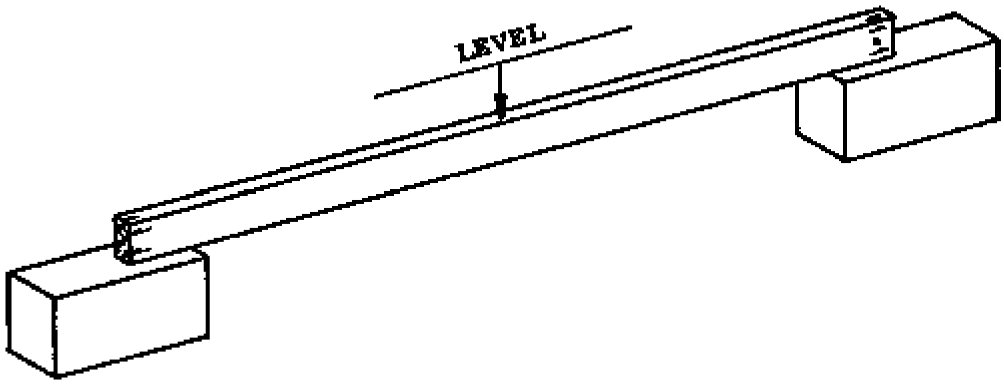

Fig. 2

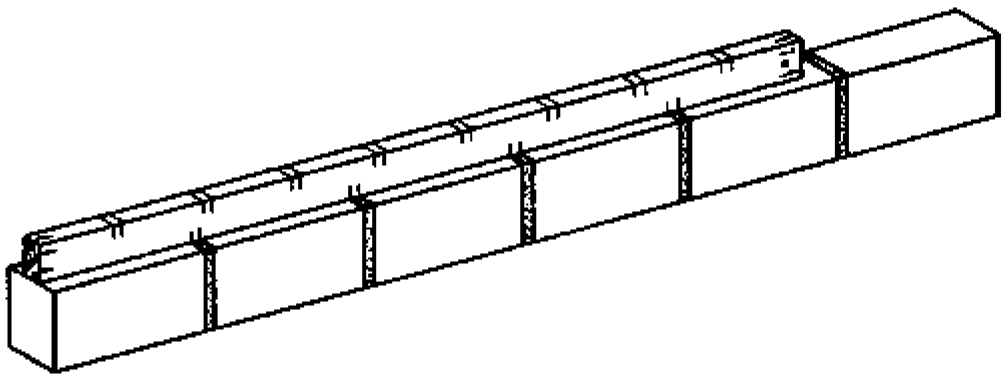

Fig. 3

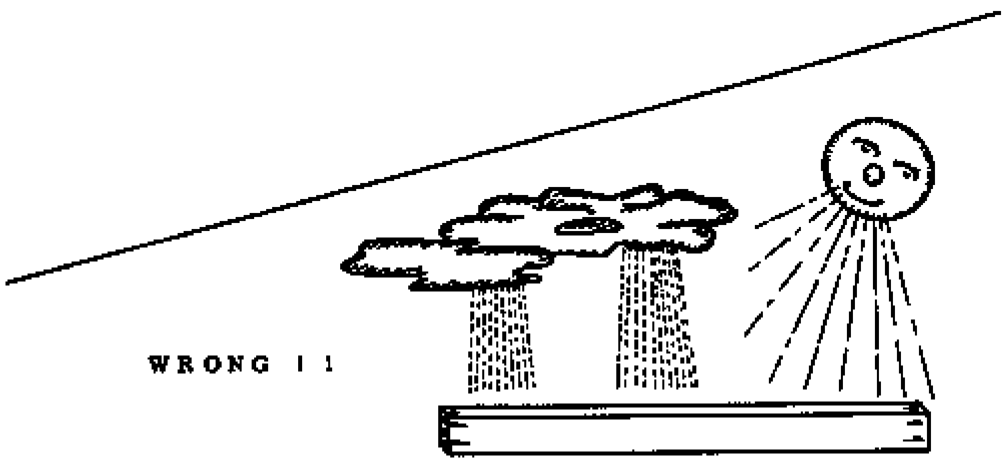

STRAIGHT EDGE

This is a planed piece of wood which should be well seasoned and dry to prevent it from bending and twisting. The dimensions of a straight edge are usually 2 to 2,50 m long, 7,5 cm wide and 2,5 cm thick; both edges must be perfectly straight and parallel (Fig. 1).

The straight edge is employed for testing masonry work either alone or in conjunction with the spirit level (Fig. 2).

Some straight edges are marked off with saw cuts to the required gauge; that is, one division is equal to the height of a block plus the joint; and, on the other edge, the length of a block plus the joint (Fig. 3).

Its wide range of further applications will be described as it is needed for certain constructions.

Do not allow a straight edge to dry out in the sun or to be soaked in water as this may cause it to bend or twist (Fig. 4). When you are finished using it, hang the straight edge in a protected place to keep it straight.

NOTES:

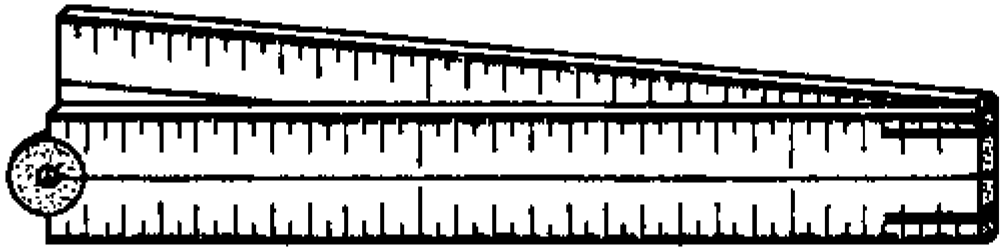

FOLDING RULE

Fig. 1

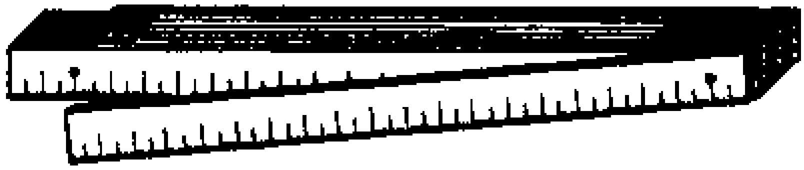

ZIG-ZAG RULE

Fig. 2

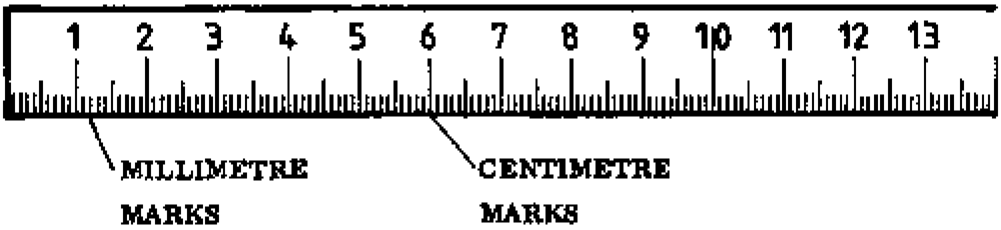

Fig. 3

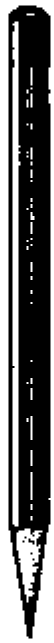

Fig. 4

PENCIL

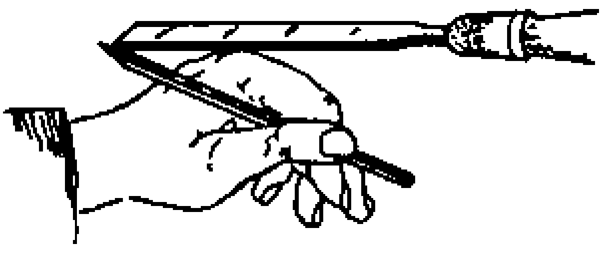

Fig. 5

MEASURING AND MARKING TOOLS

FOLDING RULE

The four-fold rule shown in Fig. 1 is made of four wooden, plastic or metal pieces which are held together by special hinges. It is one metre long and divided on both sides into millimetres and centimetres. It is used to find and check measurements as well as to mark out the work.

To make the rule operate more smoothly and last longer, put a drop of machine oil in the joints.

ZIG-ZAG RULE

A zig-zag rule is similar to a folding rule (Fig. 2). It is made out of the same materials but from pieces which are 20 cm long. As the hinges are different from those of the folding rule, be careful not to break it when opening and closing it. They come in lengths of 100 and 200 cm.

HOW TO READ RULES

The marks on a rule are of different lengths to make it easier to read accurately (look at the rule you use in class). The marks at each centimetre are the longest, the marks for 5 mm (1/2 cm) are medium long, while the millimetre marks are shortest (Fig. 3).

When measuring with the folding rule or the zig-zag rule, one must make sure that the rule is completely opened and straight. It is then held parallel to an edge, or at right angles to a face. If this is not done, the measurements you get will always be a little different from the correct ones.

PENCILS

For marking on wood, a hard lead pencil (H or 2H) is best (Fig. 4). The point should always be kept sharp, because using a blunt pencil can result in an inaccuracy of up to 2 mm.

Fig. 5 shows how to hold a pencil while sharpening it.

NOTES:

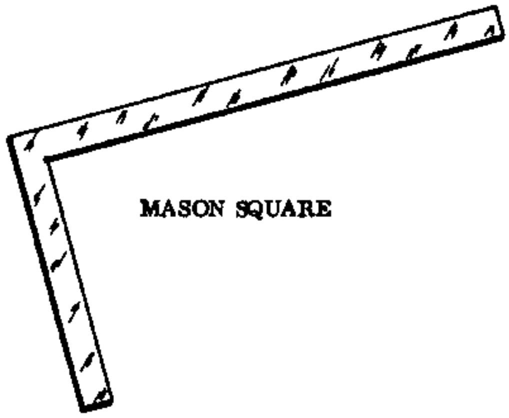

Fig. 1

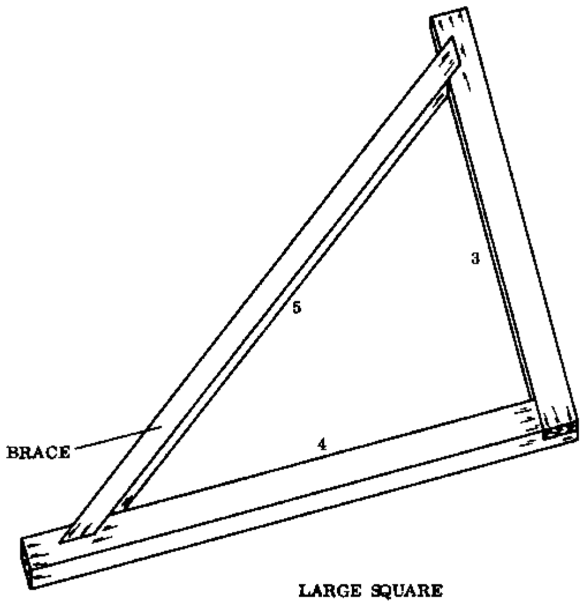

Fig. 2

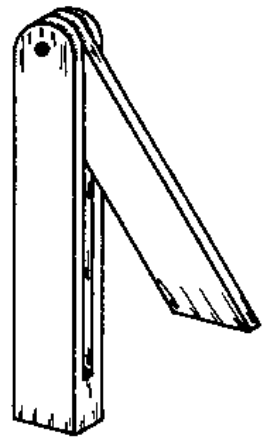

Fig. 3

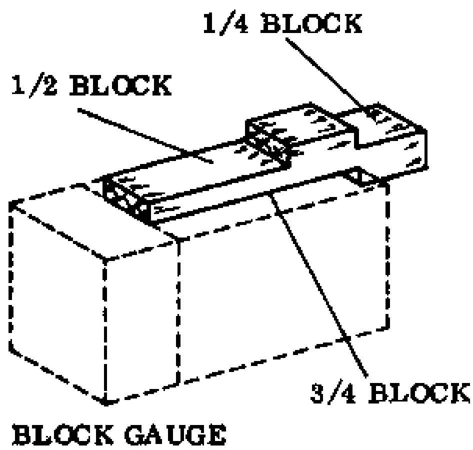

Fig. 4

THE MASON SQUARE

The mason square is made from steel (Fig. 1). Measured along the outer edge, the short blade is 33 cm long and the long blade is 60 cm long. The blades are sometimes marked with millimetres, centimetres, and decimetres.

The mason square is used for setting out right angles as at quoins, and for testing corners during plastering.

When using the square, hold it either horizontally or vertically (not at an angle) to be sure of getting the correct angles.

THE LARGE SQUARE

This square is made entirely from wood (Fig. 2). To construct this large square which is made at the building site, use the 3-4-5 method and nail the boards together securely. A brace over the two legs ensures that the square remains at the correct angle. The square is used to test larger right angles.

THE SLIDING BEVEL

A sliding bevel (Fig. 3) can be made out of wood by the Rural Builder. The two legs are adjustable and held together by a small bolt with a wingnut to make it easy to adjust the bevel. It is used when you have to mark many blocks at a certain angle (also see page 78).

BLOCK GAUGES

These are pieces of wood cut to the size and shape indicated in Fig. 4. Block gauges may be used to mark off the sizes of 1/4, 1/2, or 3/4 blocks. Since the dimensions of landcrete blocks are different from sandcrete blocks, the trainee will make two different block gauges.

The gauges help the Rural Builder to work more efficiently when he is measuring blocks for cutting.

- NOTE: More tools for measuring and marking are included in the following sections with the carpentry tools.

NOTES:

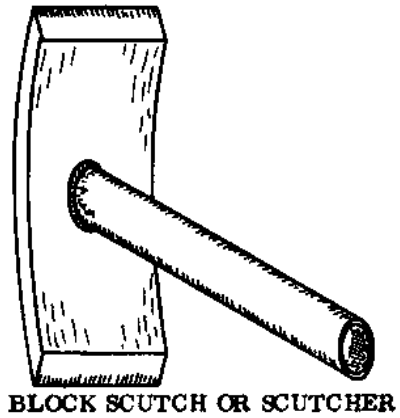

Fig. 1

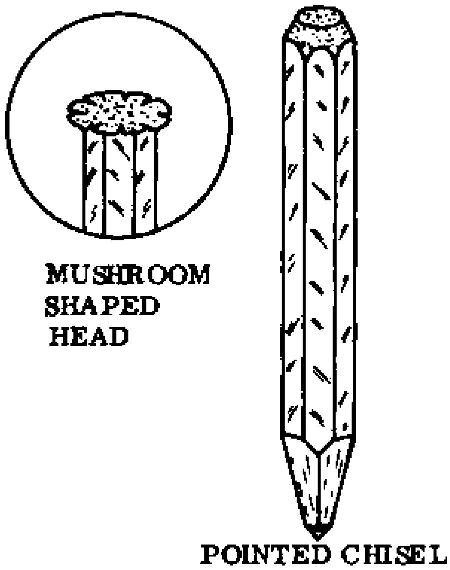

Fig. 2

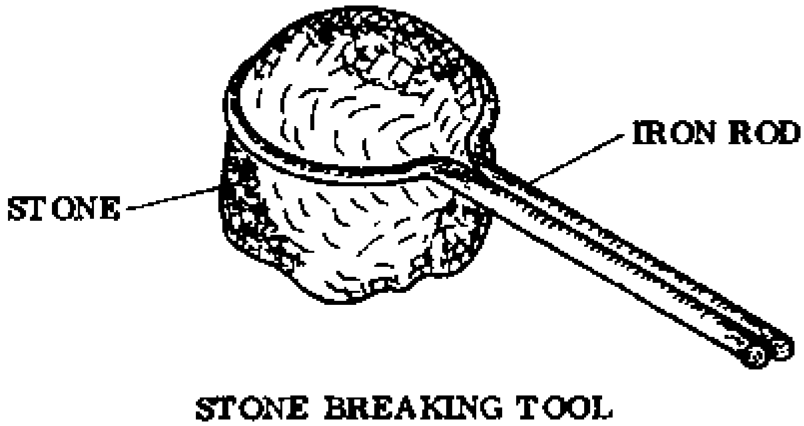

Fig. 3

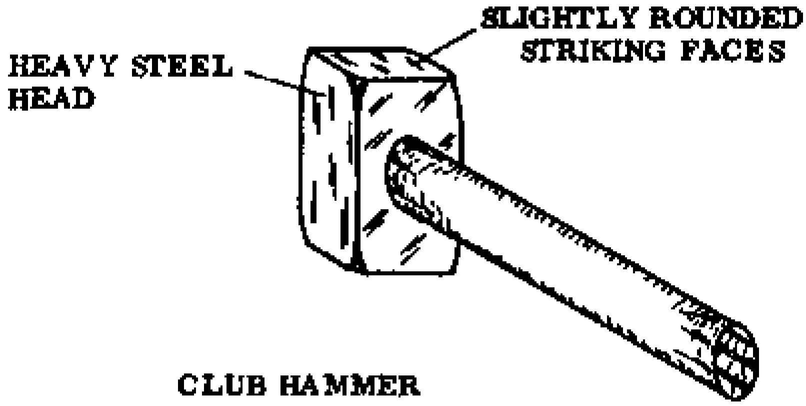

Fig. 4

CUTTING TOOLS

THE BLOCK SCUTCH

This tool consists of a hard steel blade with two cutting edges, welded to the handle which is made of iron pipe (Fig. 1). It is used for cutting all sorts of blocks and dressing cut surfaces. The angle between the blade and handle should be 75 to 80 degrees, which increases the effectiveness of the blow. The handle is oval shaped to provide a better grip.

THE POINTED CHISEL (COLD CHISEL)

This is a forged steel rod with a hardened cutting tip and striking end. It is octagonally shaped to provide a better grip for the hand (Fig. 2). Cold chisels are available in different sizes and are used together with a club hammer.

The head of the cold chisel should never be allowed to become mushroom shaped, as this may result in badly cut hands or in a piece of steel breaking off and piercing someone's eye. Always wear your safety goggles when you use the chisel.

THE STONE BREAKING TOOL

A device like the one in Fig. 3 is a useful tool on the building site. It can be made locally and is used to break stones into smaller pieces needed for concrete work. Place the device on top of the piece of stone and press it down during the hammer blow.

THE CLUB HAMMER

This hammer has a heavy steel head with slightly rounded striking faces and it can weigh from 1 to 2 kg.

The head is fixed on a wooden handle which is 15 to 20 cm in length. The hammer is used to strike cold chisels and to break stones into smaller sizes. When using the hammer, make sure that the wedge that holds the handle in the head is firmly in position (Fig. 4).

NOTES:

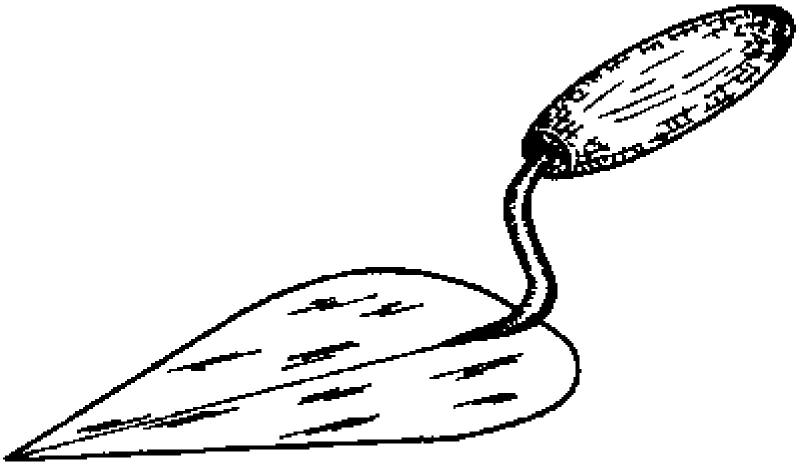

POINTING TROWEL

Fig. 1

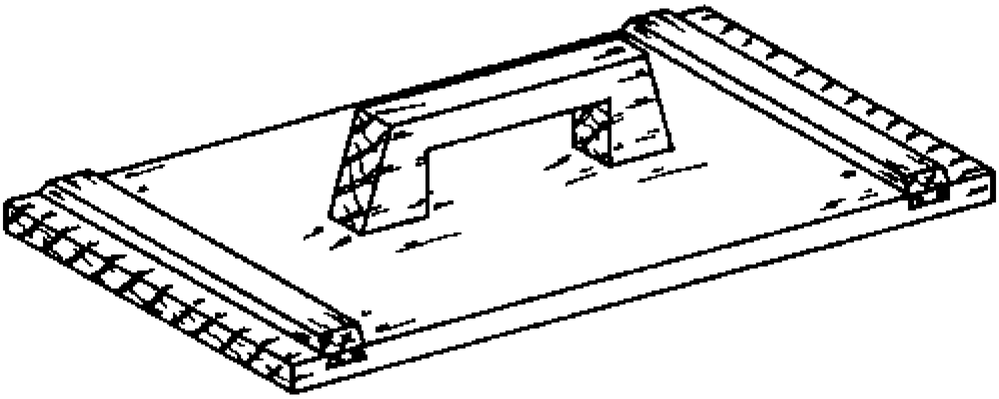

BIG WOOD FLOAT

Fig. 2

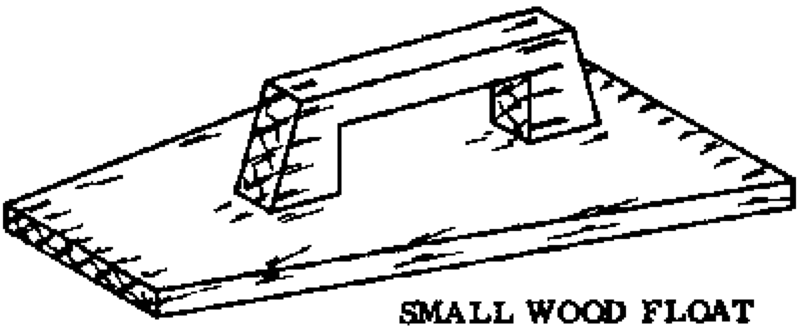

SMALL WOOD FLOAT

Fig. 3

FINISHING TOOLS

THE POINTING TROWEL

Fig. 1 shows a trowel of almost the same shape as the brick trowel mentioned earlier, but smaller in its dimensions.

This pointing trowel is chiefly used for precision work such as finishing in general and the dressing of corners and edges in particular.

THE BIG WOOD FLOAT

This tool has a blade made of a soft wood like Wawa. It measures approximately 40 cm long and 25 cm wide. A handle made from hard wood is fixed to it with screws so that the blade can be replaced when necessary (Fig. 2).

Its main uses are to distribute an even thickness of mortar during plastering and to flatten concrete surfaces during floor construction.

THE SMALL WOOD FLOAT

The small wood float is constructed in the same way as the big one but with smaller dimensions, being approximately 25 cm in length and 15 cm in width.

As it is used mainly to give the plaster and floor surfaces a smoother finish, its blade may be made from hard wood (Fig. 3).

Because the wood float is made from wood it absorbs water from the wet mortar or cement during use, and it tends to warp. To prevent it from warping, keep the float under water when it is not in use so that all the sides are wet and the wood swells evenly.

NOTES:

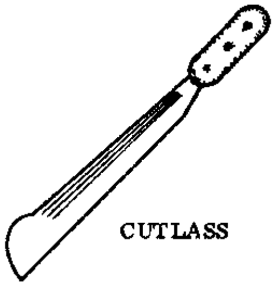

Fig. 1

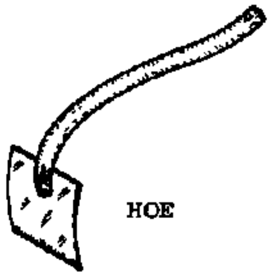

Fig. 2

Fig. 3

Fig. 4

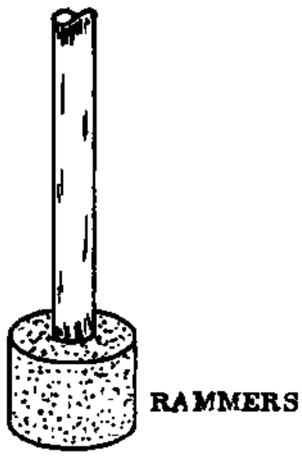

Fig. 5

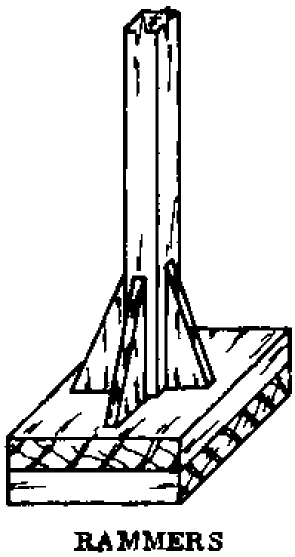

Fig. 6

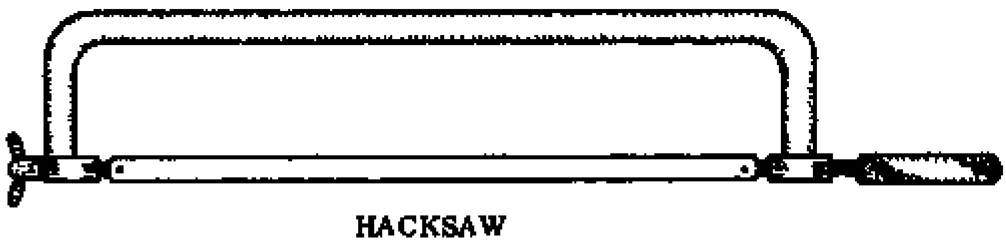

Fig. 7

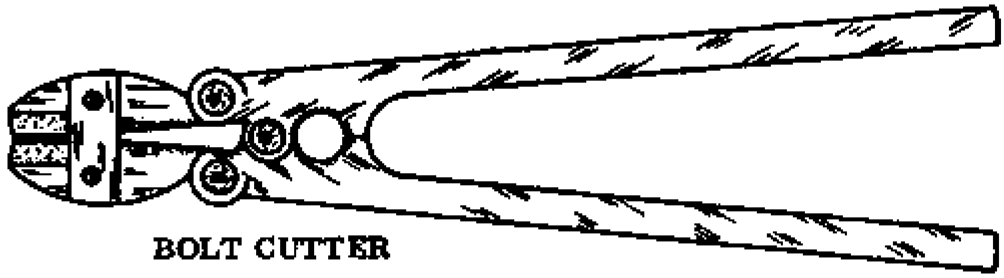

Fig. 8

SITE TOOLS

CUTLASS

The cutlass (Fig. 1) is used for clearing the site and other general cutting work.

HOE

This farming tool is often used in Rural Building to excavate top soil (Fig. 2).

SHOVEL

There are various types of shovel-like tools. The most common type is the one with a round-nosed steel blade of about 25 by 30 cm, connected to a short wooden shaft that has a "D" or "Y" shaped handle at the end (Fig. 3).

Whether the shovel has a short or a long handle is a matter of personal preference or local custom. It has been observed that the short-handled one is more suitable for filling purposes and for moving light soil, while the long-handled shovel with a square steel blade is better for loading sand and for mixing.

PICK-AXE

This digging tool consists of a heavy steel head with one pointed end and one end with a chisel edge. The head is connected to a wooden shaft (Fig. 4). The pickaxe is used during excavation to break up hard rocky soils or loosen laterite etc.

RAMMER

Rammers are either made entirely out of wood or they have a wooden handle attached to a metal or concrete head (Figs. 5 & 6). They are used to compact soil or concrete.

HACKSAW

A hacksaw is a handsaw used for cutting metal. It consists of a steel blade tightly stretched in a metal frame. The blade is removable and other blades can be fixed in the frame for cutting asbestos-cement or other materials (Fig. 7).

BOLT CUTTER

The bolt cutter is a tool which is used to cut steel reinforcing rods up to 19 mm in diameter (Fig. 8).

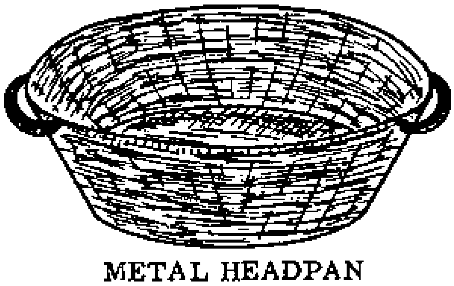

Fig. 1

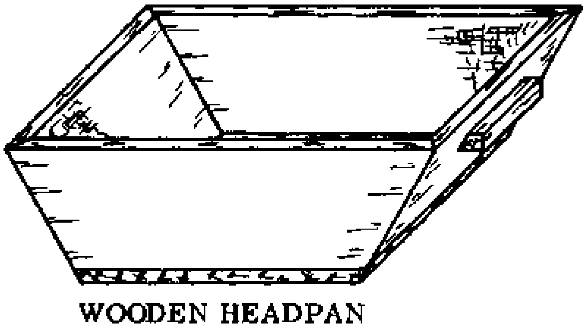

Fig. 2

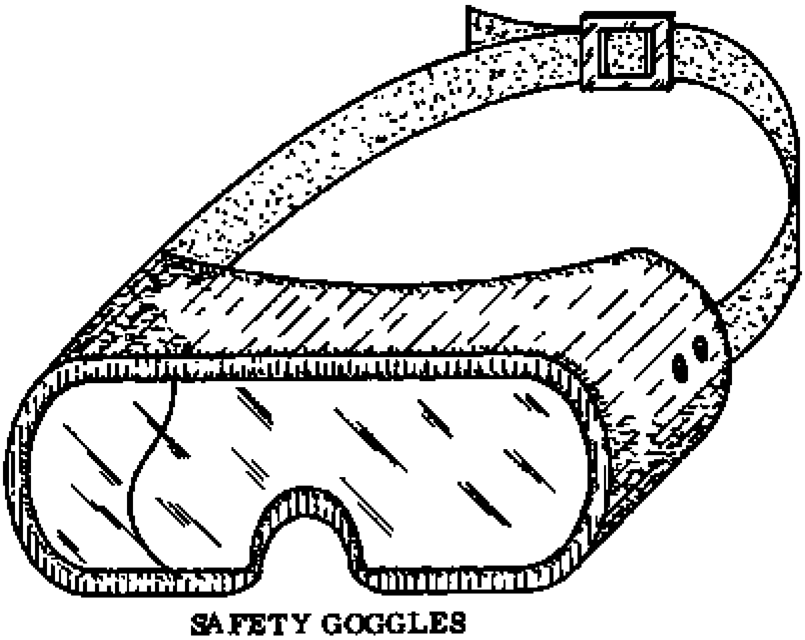

Fig. 3

HEADPAN

Smaller quantities of mortar and concrete are kept and transported in headpans. These are round containers shaped like bowls and made from mild steel or sheet metal (Fig. 1).

If made locally from wood, the headpan will be square with slanting sides (Fig. 2).

The common headpan has a holding capacity of about 15 litres for liquids, or half a bag of cement (slightly heaped up). These figures indicate that the headpan can also be used as a measure.

If you make your own headpan from wood or metal, be sure that it has the same capacity as other headpans so that you can measure accurately with it.

SAFETY GEAR

SAFETY GOGGLES

These are made from plastic and are designed to protect the eyes during all kinds of cutting or grinding operations and where there is a lot of dust in the air (Fig. 3).

NOTES:

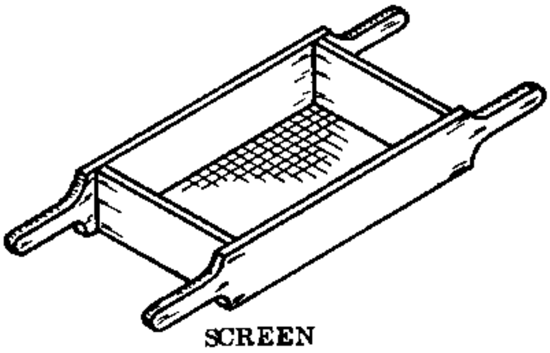

Fig. 1

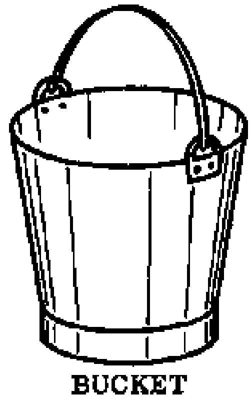

Fig. 2

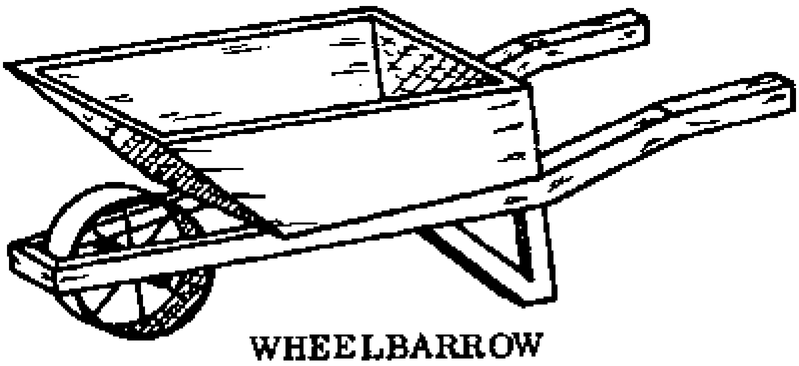

Fig. 3

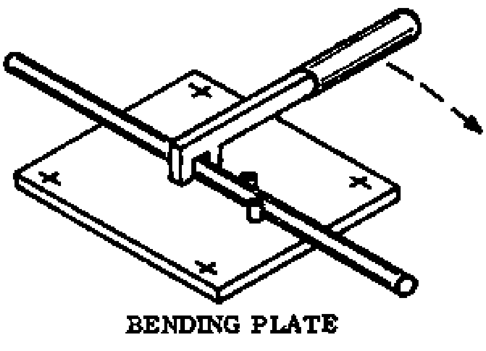

Fig. 4

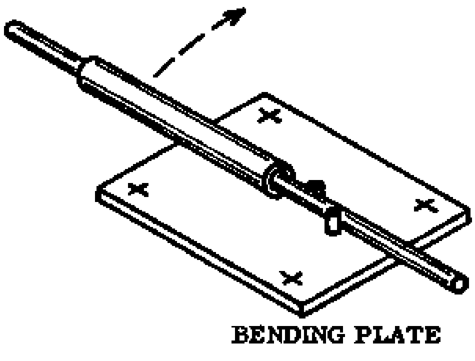

Fig. 5

SITE EQUIPMENT

SCREEN

A screen is a rectangular frame with a wire mesh built into it for separating impurities or stones from sand (Fig. 1). A well-equipped building site will have two different screens: a larger mesh to separate out stones of a convenient size; and a smaller one to sieve sand that will be used for plastering.

BUCKET

Buckets are open containers that can be made from different materials like rubber, plastic, or galvanized iron (Fig. 2). The average bucket (size no. 28) has a volume of 10 litres and is used mainly for carrying water.

ROPE

Ropes used on the building site are usually made from hemp or nylon. Nylon ropes have a tendency to stretch when they are under strain, and this must be taken into consideration when you use this kind of rope during construction work.

WHEELBARROW

The wheelbarrow is a steel or wooden container with a single steel or rubber-tyred wheel in front. It is lifted and pushed forward by means of two hand-holds attached to the frame (Fig. 3).

BENDING PLATE

Our Rural Building equipment for bending iron rods simply consists of a base-plate with two steel pegs which are spaced according to the diameter of the rod to be bent, and a bending bar (Fig. 4). The bending bar is used to do the actual bending. This is a key-shaped tool with a slot in one side into which the rod fits. Each different diameter of rod needs its own bending bar. If a suitable bending bar is not available, a pipe can be used to do the job (Fig. 5).

WATERING CAN

The watering can (not illustrated here) is a container with a pouring spout, used for watering plants. On the building site it is often used to wet down newly poured concrete or freshly made sandcrete blocks.

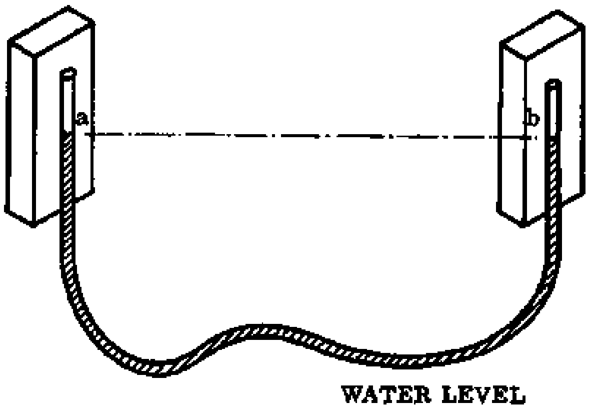

Fig. 1

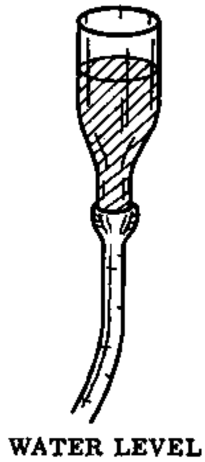

Fig. 2

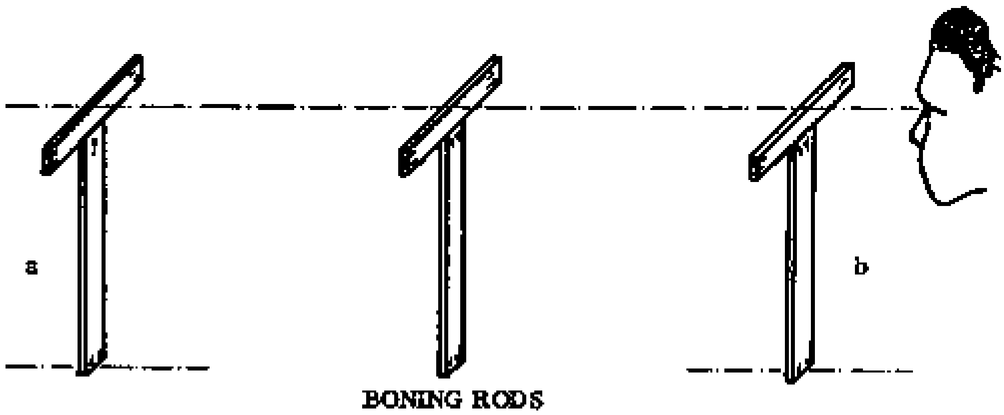

Fig. 3

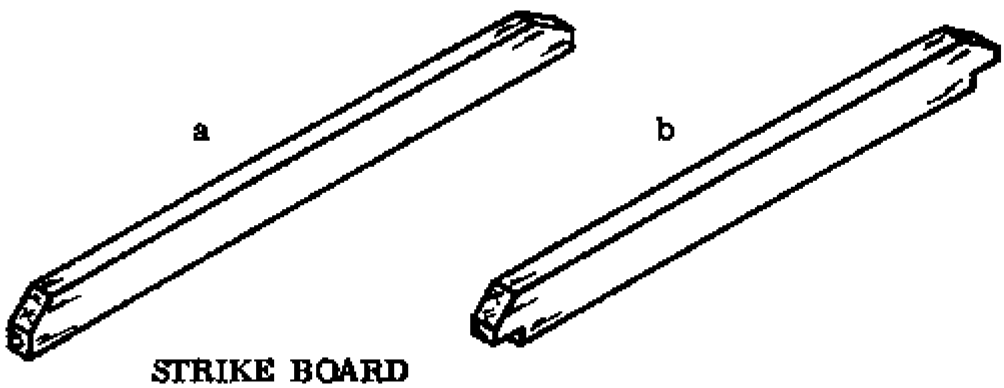

Fig. 4

WATER LEVEL

This instrument is used for setting out levels on the site as well as to transfer and control levels over large distances. It consists of a transparent plastic tube filled with water (Fig. 1). The level of the water at one end of the tube (a) will be at exactly the same height as the level at the other end (b), provided that there is no air bubble in the tube and it is not buckled.

The water level enables us to level over large distances with a high degree of accuracy.

If there is no transparent plastic tube available and some rubber hose can be found, the Rural Builder can take two glass bottles, knock out the bottoms and fit the bottle necks to each end of the hose. This apparatus is then filled with water until the water is seen in the bottles. Levels can be read as easily with this device as with any other water level (Fig. 2).

BONING RODS

Boning rods are T-shaped wooden tools, usually 120 cm high and 20 cm wide at the top. They are used in sets of three to help the Rural Builder to level between two given points (Fig. 3).

Points a and b are marked with the water level and any point in between them can be obtained by using the third boning rod and sighting along the rods (Fig. 3).

STRIKE BOARD

Strike boards are made from well seasoned wood. They are similar to straight edges except that they are usually longer (Fig. 4).

Strike boards (a) are used to level off the screed on floors, or in the case of notched strike boards (b) to level off concrete before the screed is layed.

NOTES:

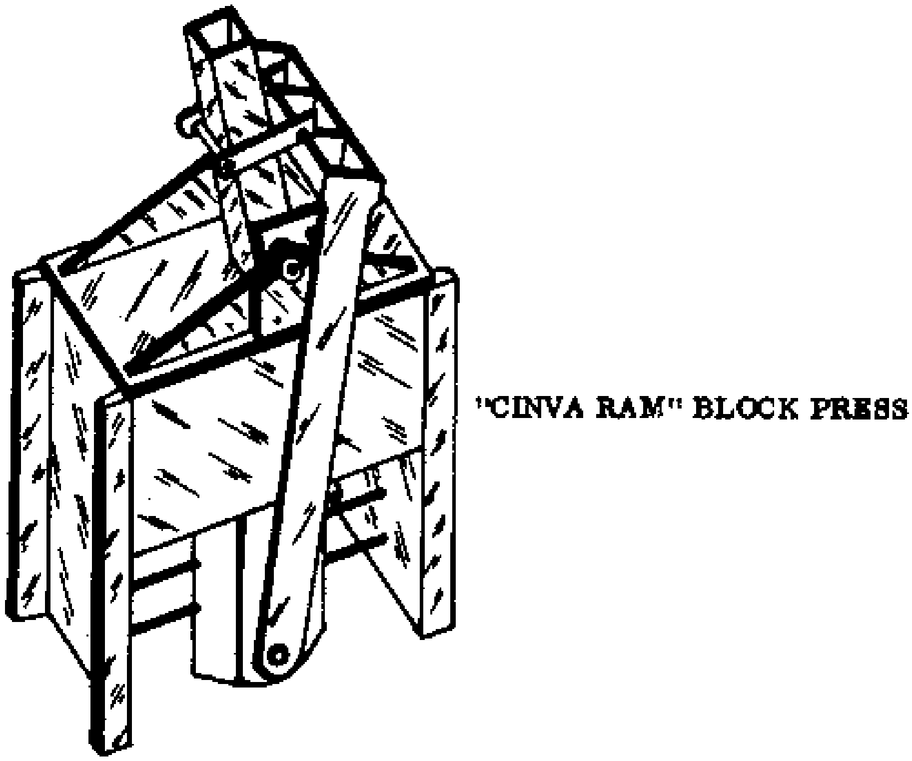

Fig. 1

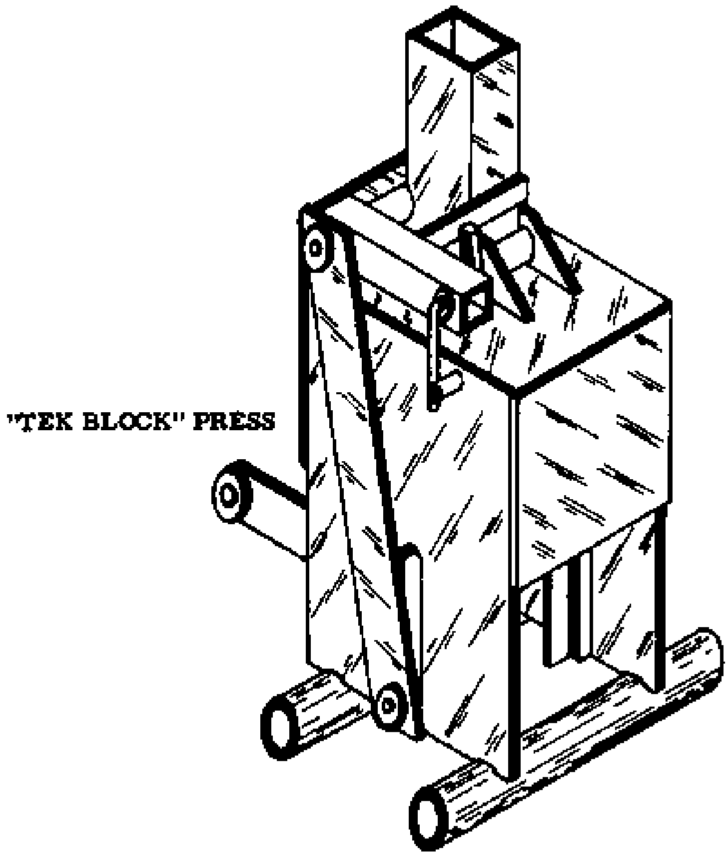

Fig. 2

"CINVA RAM" BLOCK PRESS

The Cinva Ram block press is a simple low-cost machine which produces building blocks from common laterite. It consists of a mould in which a slightly moist soil/cement mixture is compressed (packed down) by a hand operated piston and lever system (Fig. 1).

Unlike sand-cement blocks made with a similar press, these blocks can be removed immediately from the press and stacked for curing without the use of a pallet underneath.

The machine is made from steel and it is tough, durable and will stand up to long and hard use. Little maintenance is needed except for oiling.

- SPECIFICATIONS:	Size of blocks	--	10 × 15 × 30 cm
	Building unit	--	12 × 17 × 32 cm (2 cm joints).

"TEK" BLOCK PRESS

The Tek block press is similar to the Cinva Ram, except that this press produces blocks of larger dimensions (Fig. 2).

The Tek block press was designed at U. S.T. Kumasi and has been used successfully in the field for many years. The Tek block press can make blocks in any area where good laterite is available.

A moist soil/cement mixture is put into the steel mould box, pressed into a block and ejected (pushed out).

With the wooden handle, one man can put a lot of pressure on the block, so the blocks are very hard and long-lasting.

- SPECIFICATIONS:	Size of blocks	--	14 × 22 × 29 cm
	Building unit	--	16 × 24 × 31 cm (2 cm joints).

- MAINTENANCE: Oiling the machine will make it work better and last longer. Oil or grease the moving parts at least twice a day when the machine is in use.

Wipe the inside of the mould box with oil about every 10 blocks. This will make it easier to remove the blocks.

If more than one man presses on the handle of the machine, the handle should break. If the handle is too big and strong, the machine will break instead of the handle. A broken machine is far more difficult to repair than a broken handle, therefore do not use any handle which is longer than 2,5 m.

When the machine is not in use, paint it with oil to prevent rust.

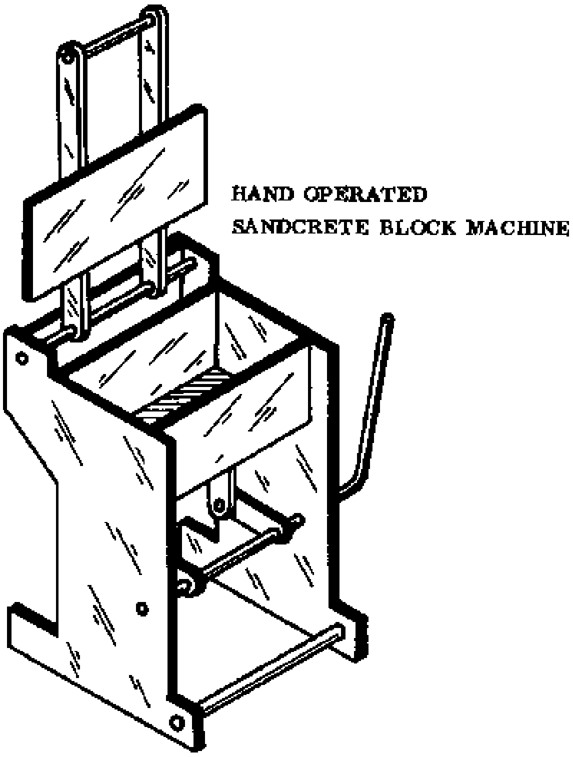

Fig. 1

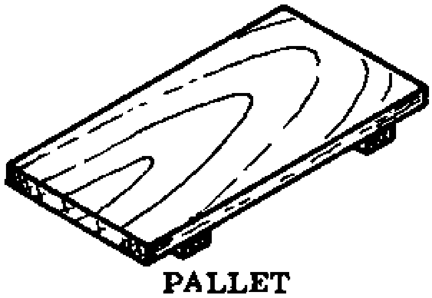

Fig. 2

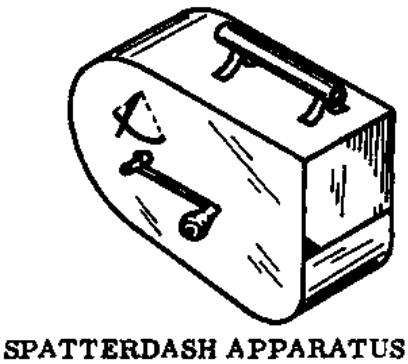

Fig. 3

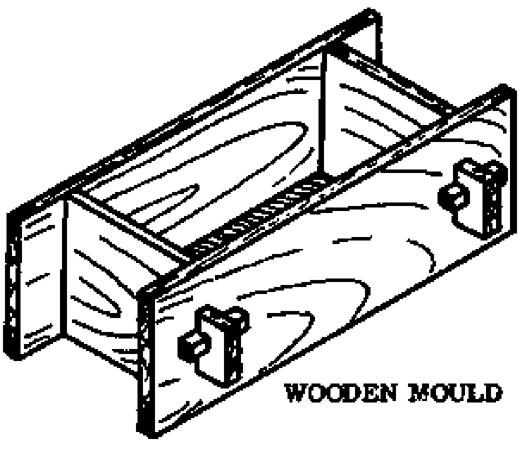

Fig. 4

HAND OPERATED SANDCRETE BLOCK MACHINE

This type of block machine consists mainly of a mould box with a movable bottom plate mounted into a supporting frame. The bottom plate is connected to a handle so that it can be raised (Fig. 1).

The lid is made of heavy material so that it presses down to compact the sandcrete. Sometimes additional weights are attached to the top of the lid to make it press harder.

After it is compacted, the block is pushed out by means of the handle at the side of the machine.

Unlike landcrete blocks, sandcrete blocks must be made on pallets, as they are too soft to be carried when they are freshly made (Fig. 2).

The inside measurements of the mould box are approximately: 46 cm in the length, 23 cm in the width, and 28 cm deep. Blocks of various shapes can be made with this machine by changing the height of the pallet or by using inserts.

SPATTERDASH APPARATUS

The spatterdash apparatus is used to give plaster or concrete an attractive appearance without the use of paint.

A slurry of sand and cement is placed in the apparatus (Fig. 3); when the handle is turned, the mixture is thrown against the wall, giving the surface a textured effect. Another handle adjusts the texture of the spatterdash from rough to fine.

WOODEN MOULD

A specially made wooden mould can be used when unusual blocks such as arch-blocks are needed or when there is no block-making machine available.

To make work easier and more accurate, the wooden mould should be made so that the sides of the mould can be removed easily and fixed back together by using wedges through tenons (Fig. 4).

NOTES:

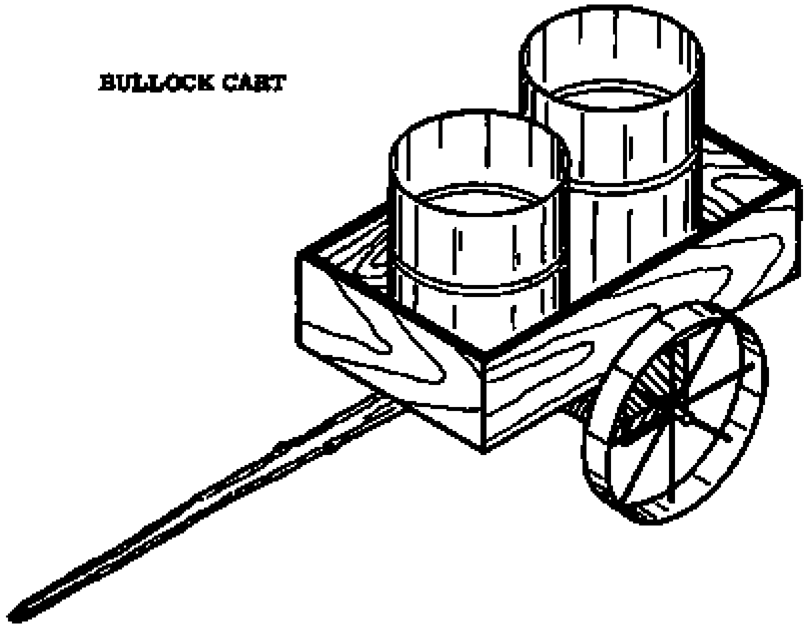

Fig. 1

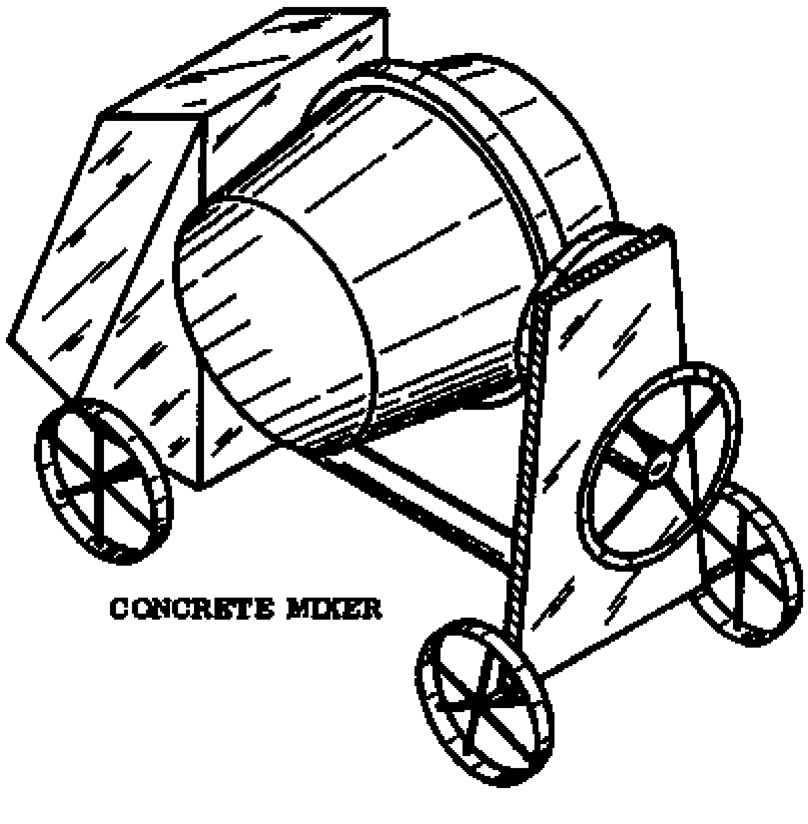

Fig. 2

BULLOCK CART

A bullock cart can transport water and limited quantities of building materials and it is therefore particularly useful at a Rural Building site. Bullock carts are made locally from wood and have steel rimmed wheels. The steel axles turn In wooden bearings which are soaked in oil. These bearings should be inspected and oiled regularly (Fig. 1).

CONCRETE MIXER

If there are few labourers and it is necessary to mix large amounts of concrete, a concrete mixer can be hired to do some of the work (Fig. 2).

The Rural Builder should know how to load the machine, in the right sequence and make sure that the concrete is well mixed and has the correct content of water.

After the job is done the machine should be cleaned thoroughly with water and all sand and cement should be washed off from the drum and the frame of the machine.

A maintenance card will tell you how to maintain the machine and how often this needs to be done.

The engine needs special care and the Rural Builder should learn as much as he can about caring for it.

NOTES:

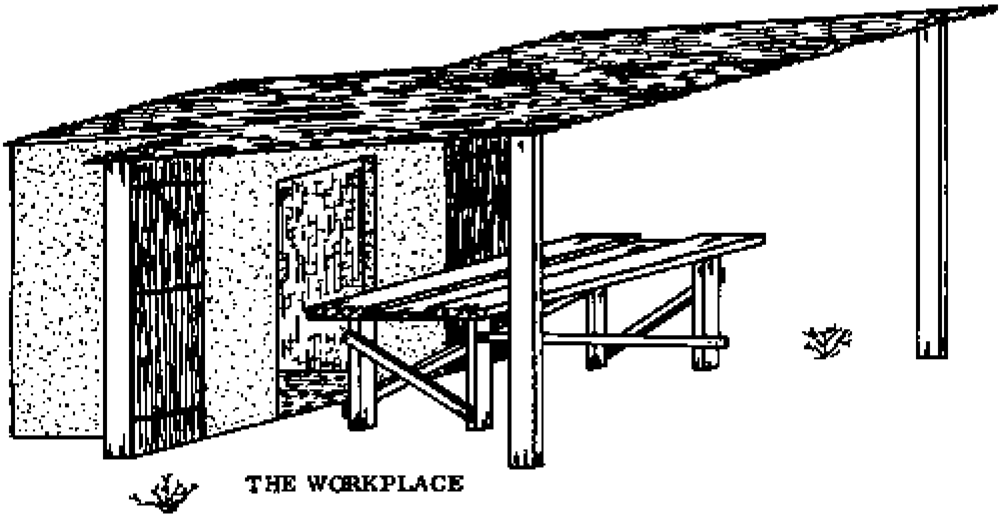

Fig. 1

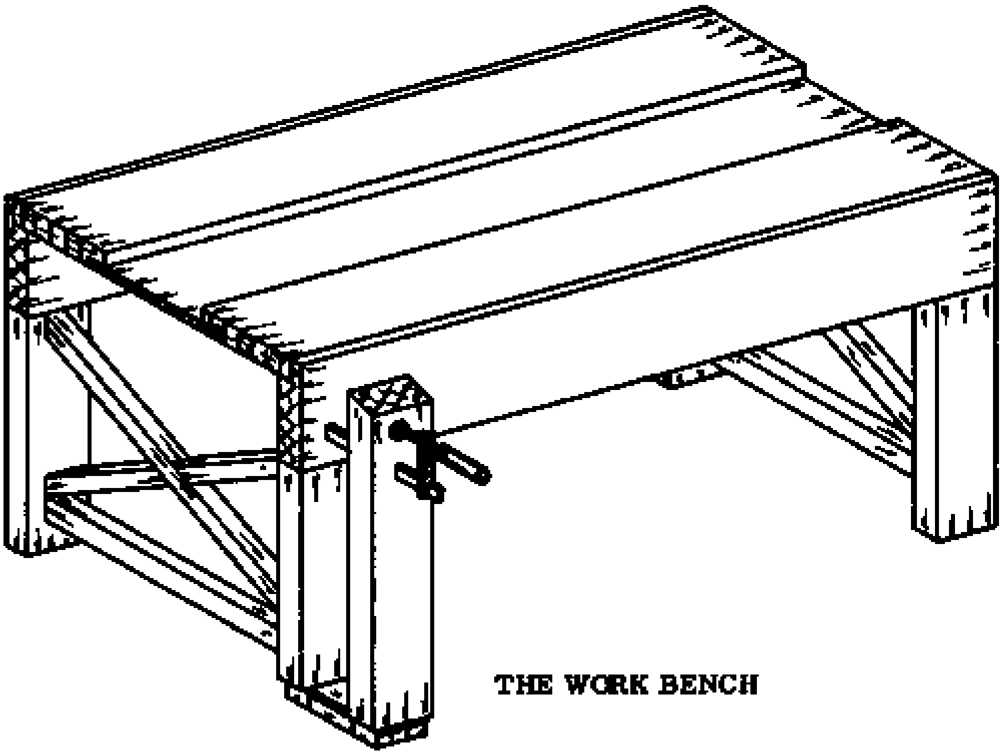

Fig. 2

THE WORKPLACE

The ideal workplace (Fig. 1) will have a waterproof shed which is open on three sides. The fourth side should be arranged for laying out the tools and toolboxes. If possible there should be a lockable store for tools and materials next to the workshed. The workshed should be close to the timber pile.

THE WORK BENCH

The bench is used for supporting the workpiece while it is being marked and during the various operations of its construction. Therefore, the bench must be strong, rigid and made from good wood.

The top must be flat and it is constructed out of planks which are 5 cm thick and 30 cm wide. The length of the bench can be from 2 to 4 metres. The height of the bench can vary between 80 and 90 cm. The legs should be well braced.

There are single and double width work benches. The last type is commonly used at the building site. It must be wide enough to handle door and window frames and long enough (a full board length of 4 metres) to be used for bending concrete iron.

If the bench is built on the building site, it is not necessary to use extra timber. The timber used in the bench can be reused for some other workpiece after the carpentry work is finished.

Permanent work benches (Fig. 2) used in a workshop will be constructed slightly different from the types used at a construction site (Fig. 1). A wooden vice is used to hold the timber, with the help of a G-clamp (Fig. 2).

NOTES:

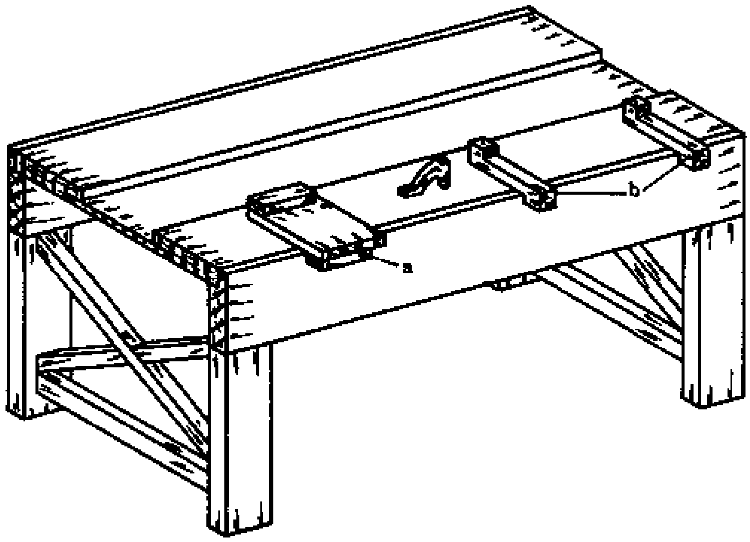

Fig. 1

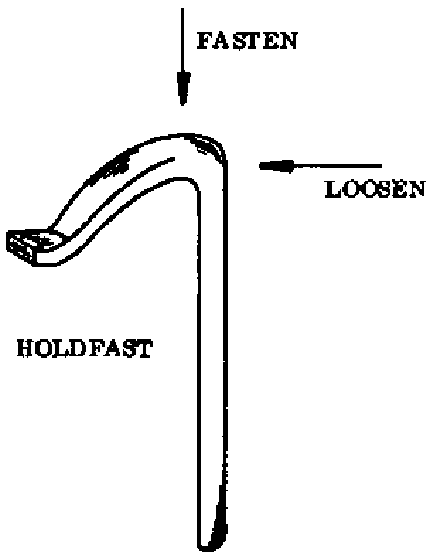

Fig. 2

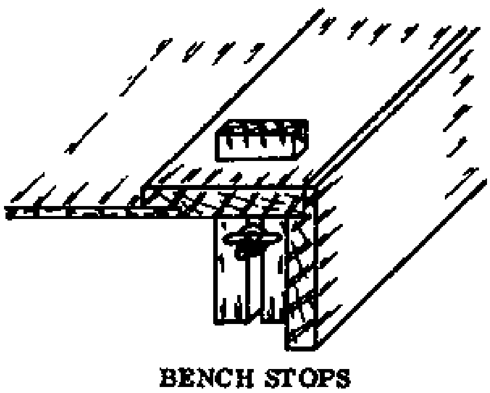

Fig. 3

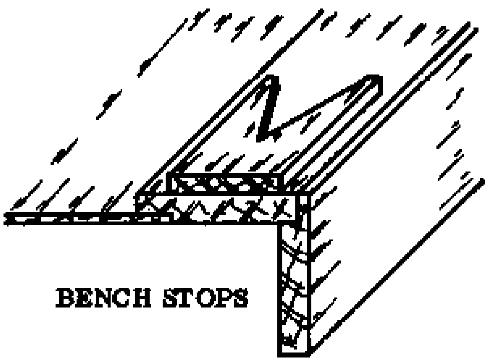

Fig. 4

BENCH HOOKS

When we have to cut a short piece of timber across the grain, we use a wide bench hook to support it. The bottom batten of the hook is held against the side of the bench and the work is pressed against the upper batten (Fig. la).

For long pieces of timber, we use small bench hooks for support (Fig. 1b).

Wide bench hooks measure approximately 15 × 25 cm; small ones about 5 × 25 cm.

THE HOLDFAST

A holdfast can be used to fasten wood firmly to the top of the bench. It is made tight or loosened by knocking it with a hammer (Fig. 2).

Holdfasts can be made locally from a piece of concrete iron, 2,5 cm in diameter, with a piece of a car spring welded to the top.

THE BENCH STOP

On the left side of the bench there is a bench stop made from hard wood, to support the timber during planing.

Some bench stops can be moved up or down. These are called adjustable bench stops (Fig. 3). Other bench stops are stationary (Fig. 4).

NOTES:

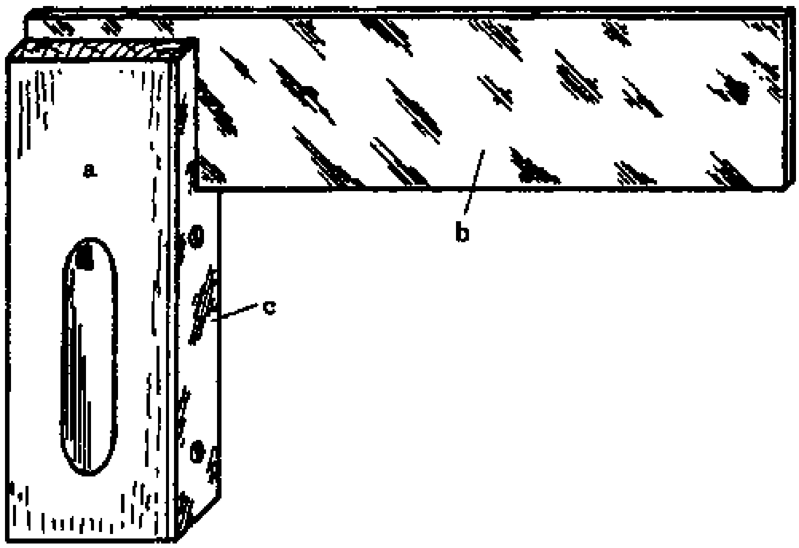

Fig. 1

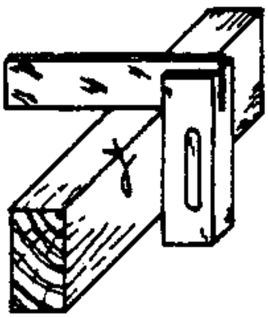

Fig. 2

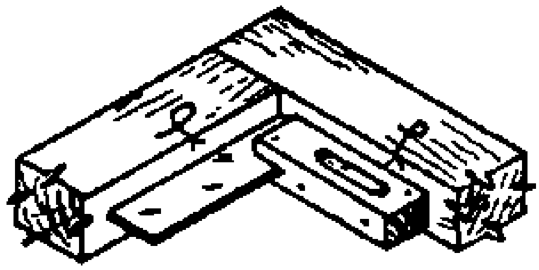

Fig. 3

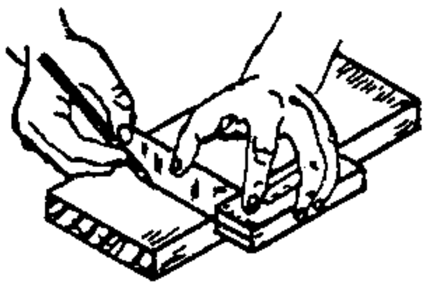

Fig. 4

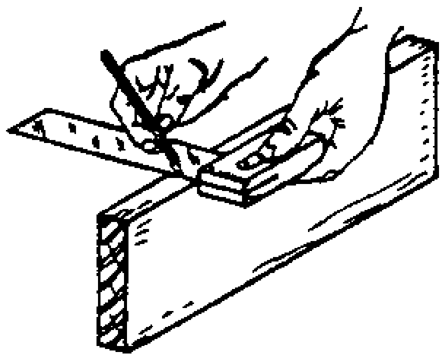

Fig. 5

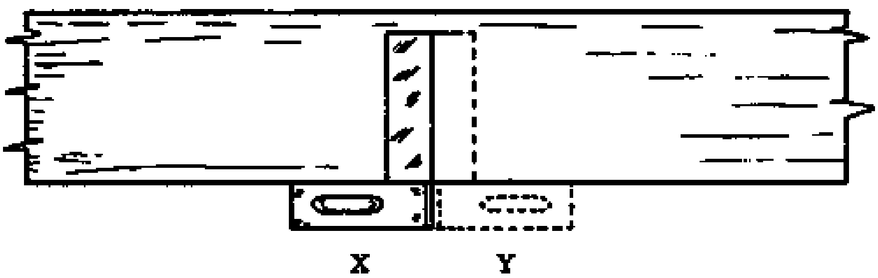

Fig. 6

THE TRY SQUARE

The try square is used for marking timber, and for testing right angles to make sure that they are correct.

Its parts are (Fig. 1): the stock (a), the blade (b) and the stockface (c). The stock can be all metal or it can be made of hard wood with a brass stockface. The blade is made of steel. The angle between the stockface and blade is exactly 90 degrees.

HOW TO USE THE TRY SQUARE

- To test the angles of workpieces and boards, place it as shown in the figures on the left (Figs. 2 & 3). Always use the try square with the stock against the face edge or the face side of the workpiece when you are squaring or testing angles.

- For marking timber, press the stockface against one edge or side of the work-piece and use the blade to guide your pencil (Figs. 4 & 5).

- Keep the pencil pressed to the blade, to avoid making double lines.

- Be careful not to drop the try square or use it carelessly. Any small movement of the blade will make it inaccurate.

HOW TO TEST THE TRY SQUARE

1. Select a board with a true edge.

2. Lay the blade in position "X" and draw a line along the blade (Fig. 6).

3. Turn the square over as shown by the dotted lines (position "Y"). If the line and the blade come together exactly, the angle of 90 degrees is true.

NOTES:

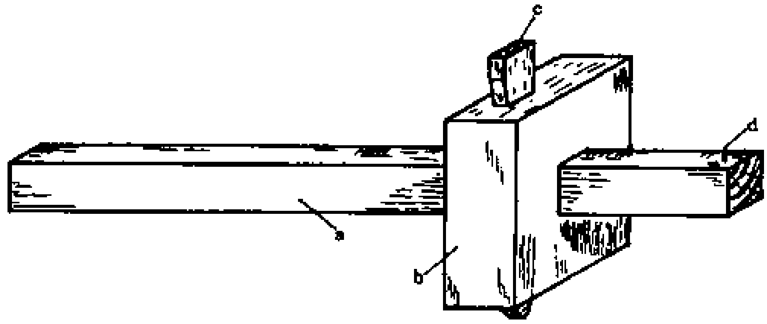

Fig. 1

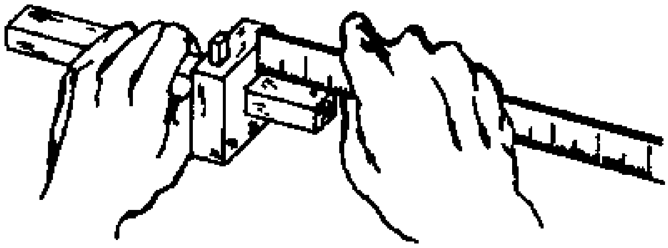

Fig. 2

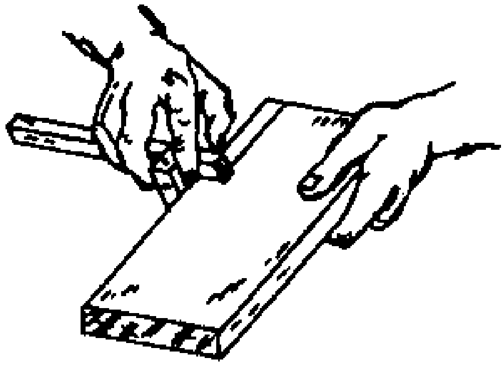

Fig. 3

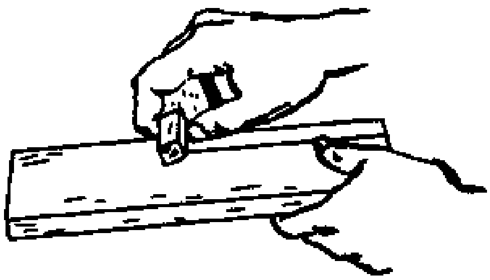

Fig. 4

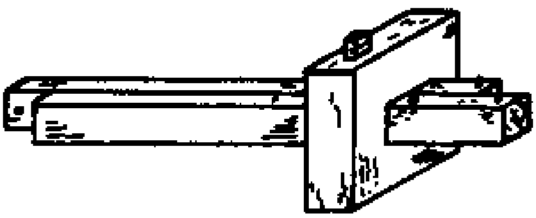

Fig. 5

THE MARKING GAUGE

The marking gauge (Fig. 1) is used to make lines on timber, parallel to the edge of the timber; that is, the lines always continue at the same distance from the edge.

The parts of the marking gauge are: the stem (a), the stock(b), the wedge (c) and the spur or pin (d). Sometimes a screw is used instead of a wedge.

HOW TO SET THE GAUGE

1. Use a rule to measure and slide the stock along the stem until the stockface is at the required distance from the pin (Fig. 2).

2. Slightly tighten the wedge or screw.

3. Check the size once more and make any necessary adjustments by tapping the end of the stem on the work bench.

4. Finally, properly tighten the wedge or screw.

HOW TO USE THE GAUGE

- Hold it in your right hand, with the face side of the stock pressed against the edge of the wood (Fig. 3).

- Keep it tilted slightly forward, so that the pin drags lightly along the wood. Don't try to make a deep mark with the pin (Fig. 4).

- Push it away from you. The pin will trace a line on the wood (Fig. 4) parallel to the edge of the wood. The stock must be held firmly against the timber edge as you move the gauge along.

- The pin may be forced out of line by grooves in the wood structure; if that occurs, mark from the other direction.

- If the gauge is hard to use at first, steady it by holding one end of the wood against the bench stop or hook.

Sometimes, marking gauges with two stems are used for marking out mortices. They are called Mortice gauges (Fig. 5).

NOTES:

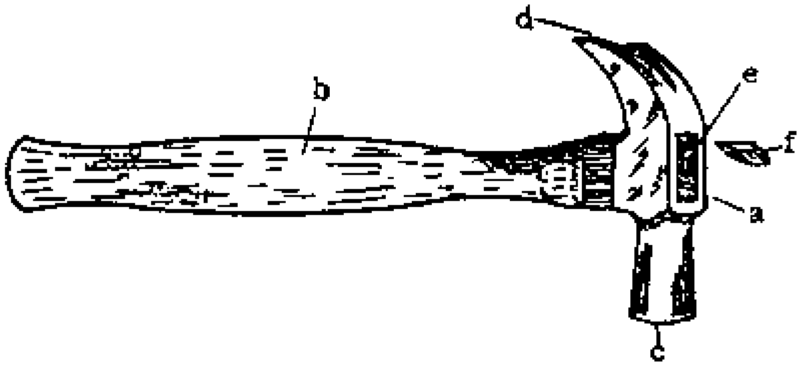

Fig. 1

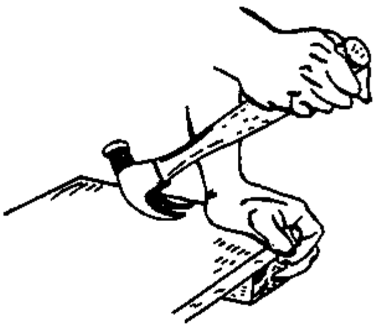

Fig. 2

Fig. 3

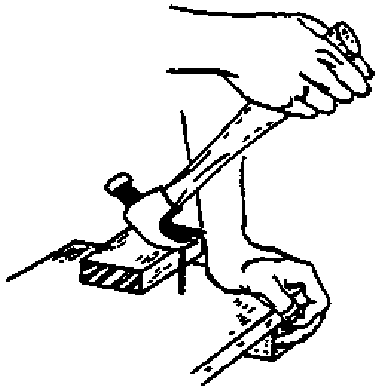

Fig. 4

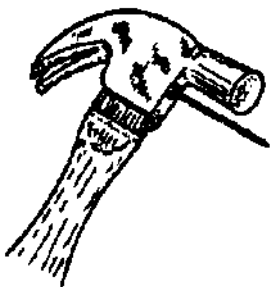

Fig. 5

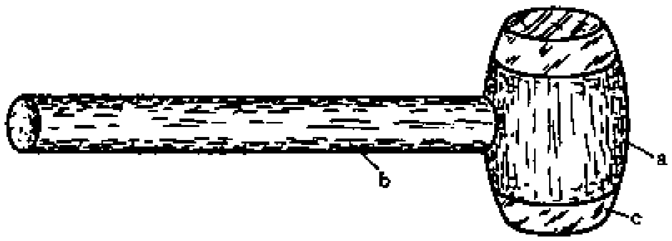

Fig. 6

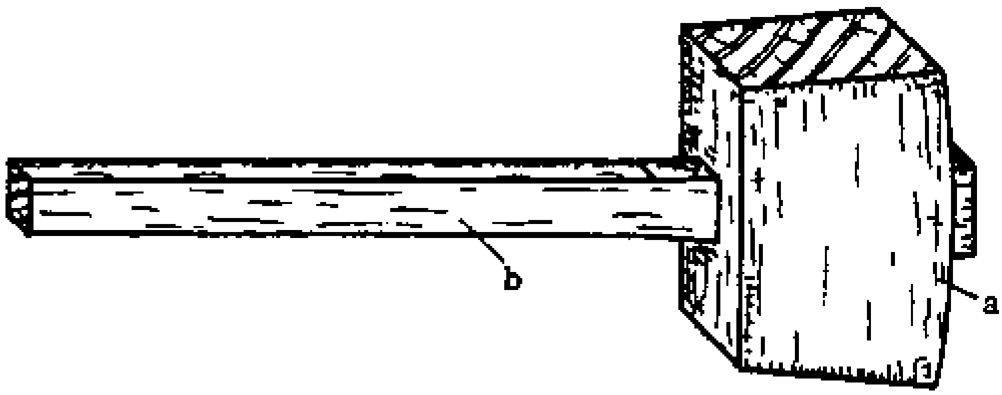

Fig. 7

THE CLAWHAMMER

The clawhammer (Fig. 1) is used in light or heavy carpentry work, for driving and extracting nails. Its size, determined by the weight of the head, can be from 350 to 650 gr.

A hammer has two main parts: the head (a) and the handle (b). The head is made of steel, with a hardened face (c) and a claw (d) for extracting nails. The wooden handle is held in the eye (e) by metal wedges (f). The handle is usually made of hard wood, which absorbs shock better than metal and keeps the arm from getting tired so quickly.

HOW TO PULL NAILS

To pull a nail, slip the claws under the nailhead and pull up and back on the hammer handle (Figs. 2 & 3). When the handle reaches the vertical position and the nail is not yet all the way out, use a block of wood under the hammer (Fig. 4) to help. Pulling the handle back too far may overstrain or possibly break it.

HOW TO DRIVE NAILS

Nailing is covered in detail in the Basic Knowledge book, pages 92 to 94.

- To drive nails when you have only one hand free, hold the nail on the hammer as shown in Fig. 5 and start it in the wood with one sharp blow.

THE MALLET

The mallet is used for driving chisels, assembling joints and knocking together pieces where the hammer would damage the wood or the chisel handle. The mallet (Figs. 6 & 7) has two parts: the head (a) and the handle (b), which passes through a tapered mortice in the head.

The head can be square or round in shape. The round type can be strengthened with a metal collar (c) to prevent it from splitting. This can be made from an old shock absorber mantle.

NOTES:

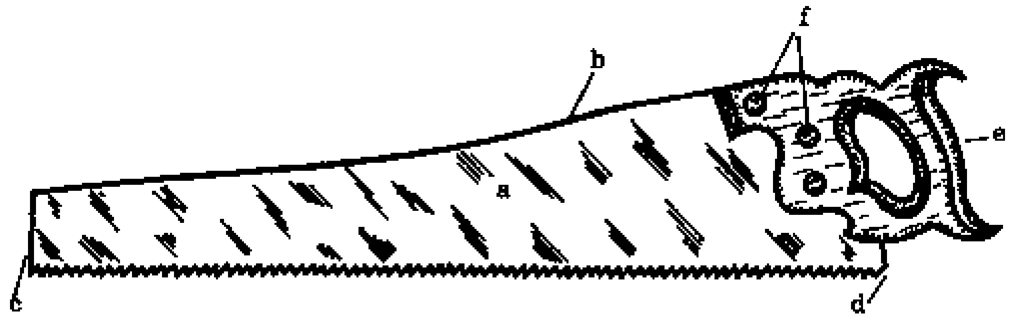

Fig. 1

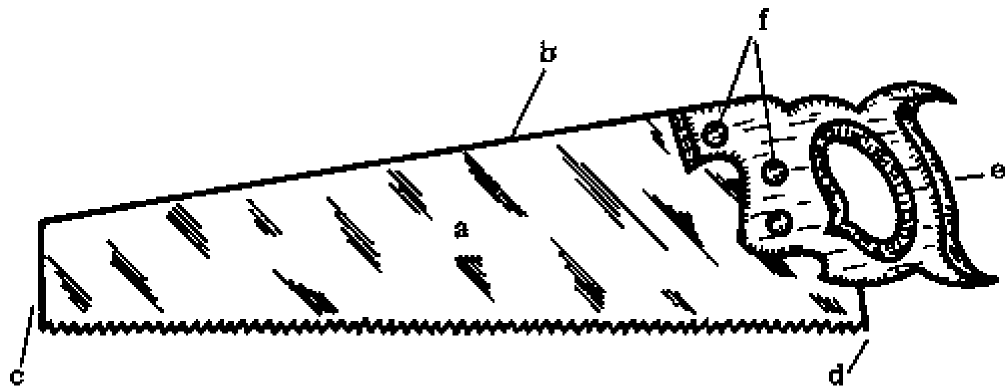

Fig. 2

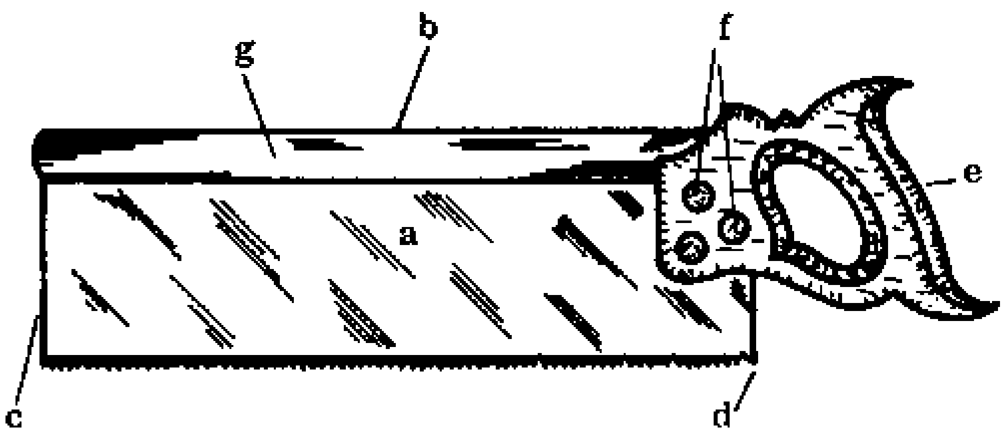

Fig. 3

HANDSAWS

Saws are used for cutting timber to the required size and shape with a minimum of waste in materials and labour. The principal types used in Rural Building are handsaws.

The parts of the saw are (Fig. 1): the blade (a) which has a back (b), toe (c) and heel (d), the handle (e) and the sawscrews (f) which hold the handle to the blade.

Better quality saws are taper ground, that is, they are thinner towards the back of the blade than at the cutting edge. Such saws can run (move) more freely in the kerf (the saw cut).

A good sawblade makes a clear sound when it is slightly bent and struck on the back with a fingernail. The handle should be made of good hard wood and have a comfortable grip.

Manufacturers make saws in various grades, of hard or soft steel, regular or light weight to suit any need. Depending on the kind of work we want to do, we use one of three types of handsaw: a ripsaw, a crosscut saw or a backsaw.

THE RIPSAW

The ripsaw (Fig. 1), because of the special shape of its teeth, is used only to cut with the grain of the wood. The length of the saw can vary from 66 to 71 cm. A long saw can cut faster, but it is harder to control.

THE CROSSCUT SAW

The crosscut saw (Fig. 2) is designed for cutting across the grain. Its length can vary from 51 to 66 cm.

THE BACKSAW

The backsaw (Fig. 3) is used to make fine and finished cuts. In general, the blade of the backsaw is thinner than that of a ripsaw or crosscut saw. The fold of steel that sits on the back of the blade (g) makes it stiff and it can be removed if necessary to make deep cuts.

NOTES:

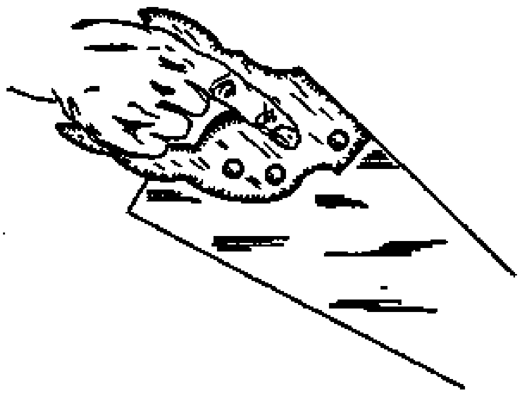

Fig. 1

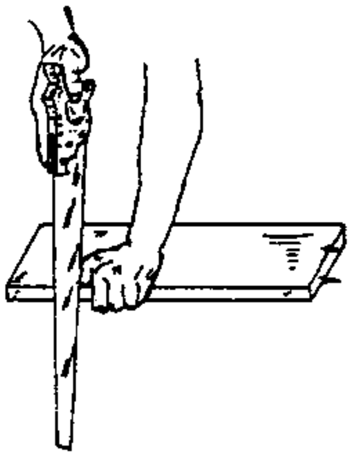

Fig. 2

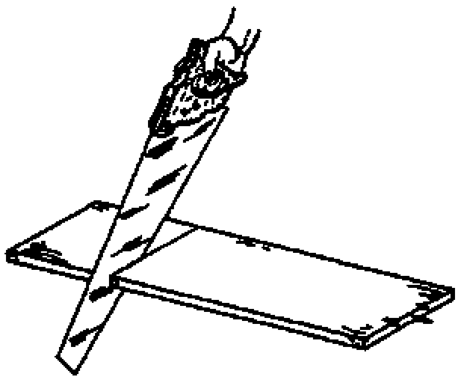

Fig. 3

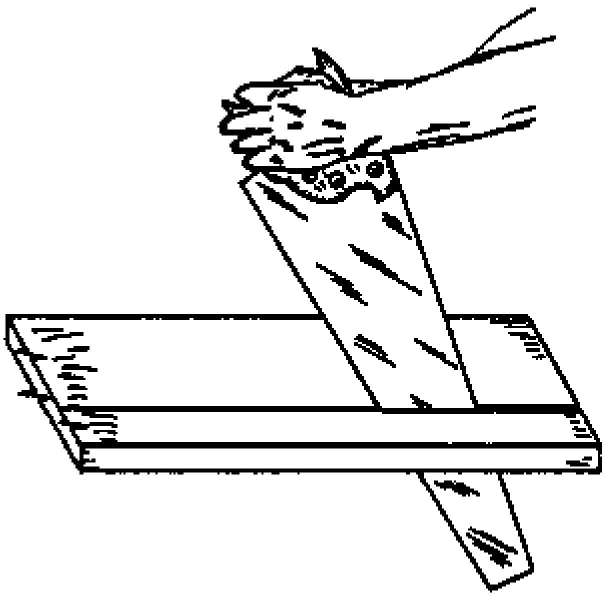

Fig. 4

HOW TO USE A HANDSAW

- Grasp the handle of the saw firmly. Your index finger should point along the blade (Fig. 1). This gives maximum control of the saw and it is the rule for holding all the different kinds of handsaws.

- To start a sawcut, grasp the far edge of the wood with your left hand, using the thumb to guide the saw while starting the cut (Fig. 2). Make two or three backstrokes, lifting the saw on the forward strokes. Draw the saw slowly and carefully, exactly along the cutting line (Fig. 3).

- After the saw is started, push it forward and pull it back, using Long, easy strokes and light pressure.

- Hold the saw at an angle of about 30 degrees to the board for rough work and almost flat to the board for fine cuts.

- If the saw tends to go to one side of the line, twist the handle slightly and gently to make it come back to the line gradually, as the sawing proceeds.

HOW TO RIP BOARDS

For ripping boards (cutting with the grain), you can use different methods. The most common method used in Ghana is known as overhand ripping.

- To do overhand ripping, hold the saw in both hands as shown in Fig. 4.

When cutting timber take care that you always watch the edge of the work bench, to avoid sawing into it.

NOTES:

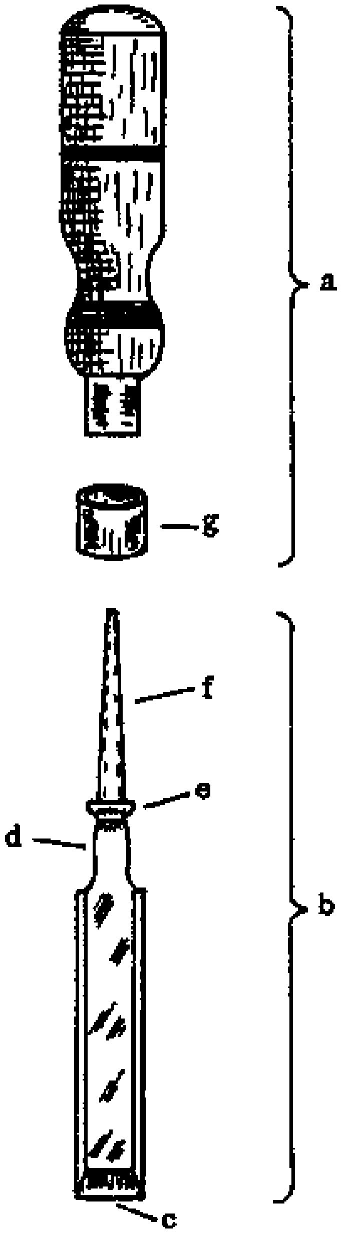

Fig. 1

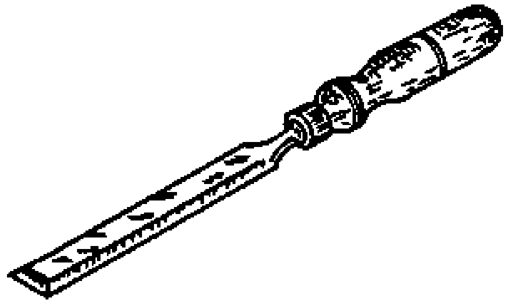

Fig. 2

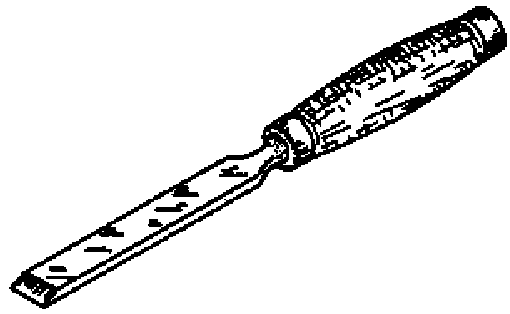

Fig. 3

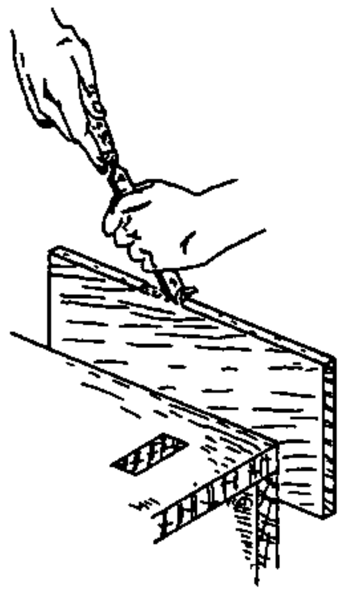

Fig. 4

THE CHISEL

Chisels are used for shaping wood in places where the plane cannot be used.

They have two main parts (Fig. 1): the blade (a) and the handle (b). The blade is made of steel, with a cutting edge (c) which is 3 to 32 mm wide and ground at an angle of 25 degrees. The neck (d) is the narrow part at the top of the blade. The shoulder above the neck (e) is to prevent the blade from being driven too far into the handle and splitting it. The tang (f) is the end of the blade which fits into the. handle and holds the two parts together.

The ferrule (g) at the bottom of the handle keeps the wood from splitting where the blade enters the handle. The handle itself is made from hard wood or plastic and it is slightly rounded on top to prevent splitting.

For the various tasks of carpentry work in Rural Building, there are different kinds of chisels. The two most common ones are the firmer chisel and the mortice chisel.

THE FIRMER CHISEL

Most of the firmer chisels (Fig. 2) are the type with a bevelled edge. The firmer chisel is normally driven into the wood by hand and is used only for light cutting and shaping work.

THE MORTICE CHISEL

The blade of the mortice chisel (Fig. 3) is thicker and stronger than that of the firmer chisel, as it is used for heavy work. This chisel is driven into the wood with a mallet (never with a steel hammer), so it is usually fitted with two ferrules, at the top and bottom of the handle, to prevent splitting.

NOTES:

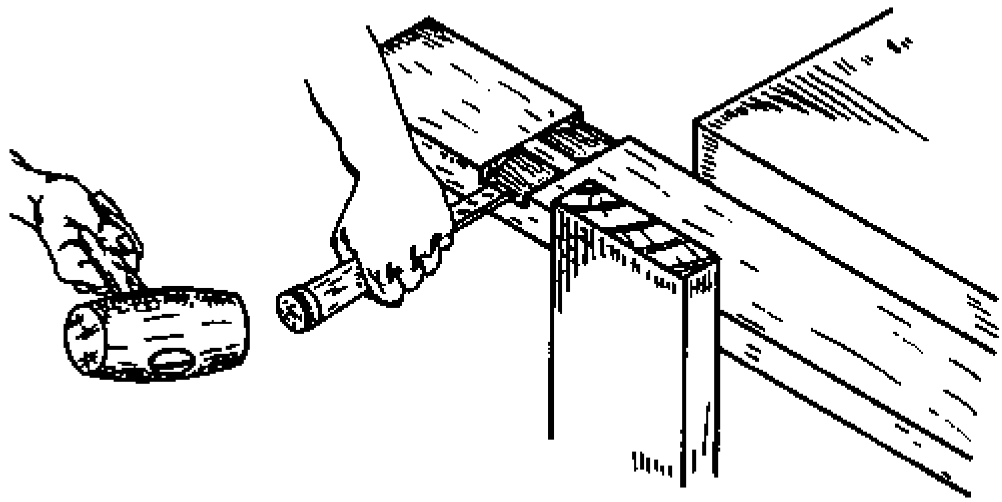

Fig. 1

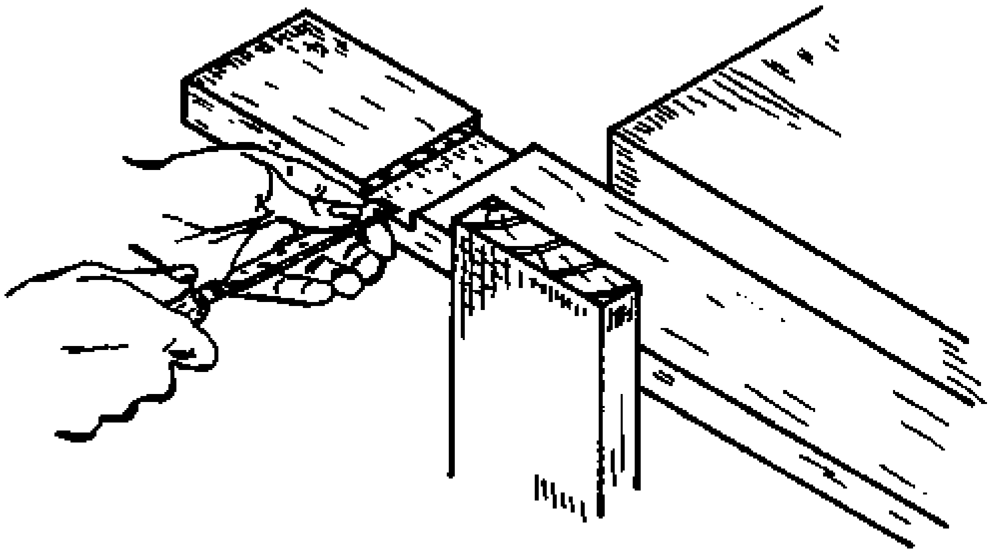

Fig. 2

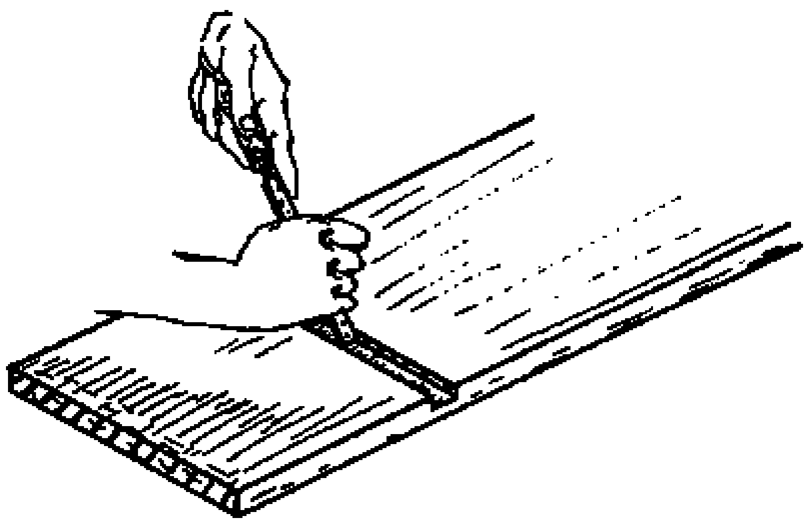

Fig. 3

HOW TO USE THE CHISEL

To do good work, you need a sharp chisel. A dull chisel is hard to force through the wood and it is also hard to guide and control, making the resulting work rough and inaccurate. The time you use to stop and sharpen a dull chisel will soon be regained by better and faster work.

To prevent dulling the chisel, do not allow the cutting edge to touch other tools or the bench top. Always lay the chisel on the bench with the bevel side down.

CHISELLING WITH THE GRAIN

When chiselling with the grain, observe the following points (see Fig. 4 on the previous page):

- Always work with the grain, to avoid splintering or splitting the wood.

- Fasten the work securely so your hands are both free for the chisel.

- Always push the chisel away from yourself, keeping both hands behind the cutting edge.

- Use your left hand to guide the chisel, and your right hand to push on the handle.

CHISELLING ACROSS A BOARD

When chiselling across the grain, observe the following:

- Grasp the blade of the chisel between the thumb and forefinger of your left hand, to guide it and act as a brake, while the pushing is done with your right hand (Fig. 2).

- Cut with the bevel side up, raising the handle just enough to make the chisel cut. For heavier chiselling and for rough cuts, the mallet may be used as is shown in Fig. 1.

- When chiselling across wide boards, where the chisel cannot reach to the center of the board, work with the bevel side down (Fig. 3).

NOTES:

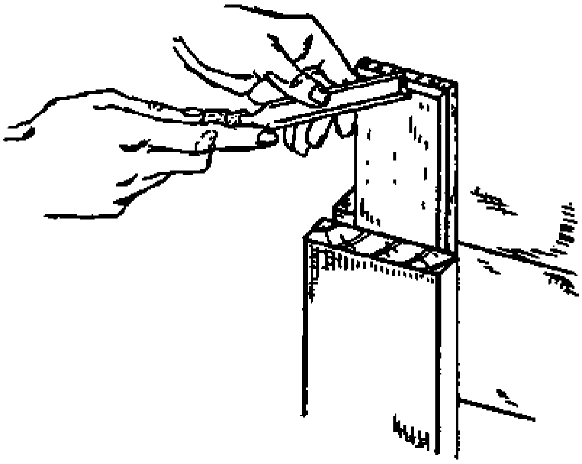

Fig. 1

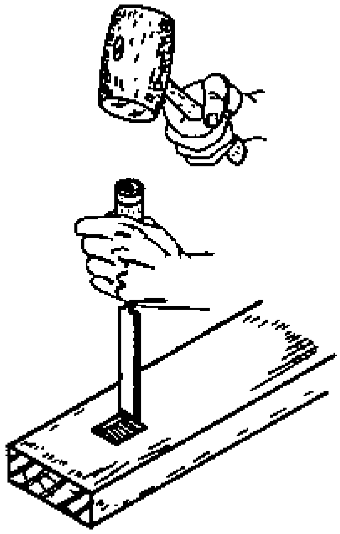

Fig. 2

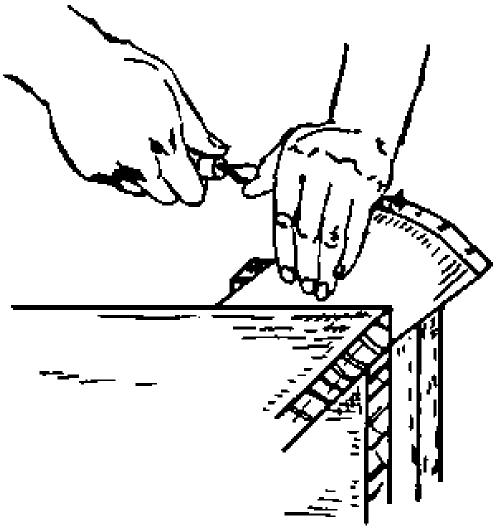

Fig. 3

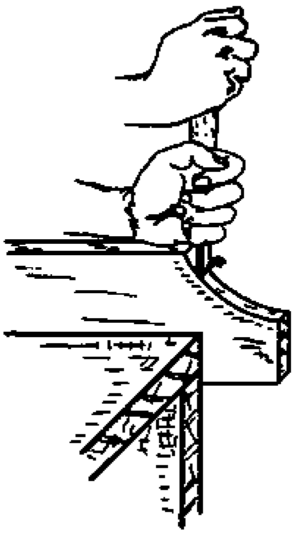

Fig. 4

USING THE MALLET

Use a mallet to drive the chisel when force is required to make deep, rough cuts. Never use a steel hammer, it will soon damage the chisel handle.

- Make a series of light taps with the mallet instead of heavy blows, as light taps will give you better control.

CHAMFERING

The chisel may be used to make chamfers or bevels, with or across the grain.

- Keep the bevel up. As you push the chisel forward, move the handle slightly from side to side, so that the cutting edge works obliquely (at an angle) (Fig. 1).

- Prevent splintering in cutting end chamfers or bevels by working part way from one edge and part way from the other.

MORTICING

Morticing is done as shown in Fig. 2 on the left page.

CUTTING CURVES WITH THE CHISEL

Convex curves can be shaped with the chisel as shown in Fig. 3.

- Use the chisel with the bevel side up. Hold and guide it with your left hand while you push it forward with your right hand.

Concave or inside curves may also be finished with the chisel, as in Fig. 4.

- Use the chisel with the bevel side down.

- Guide it with your left hand, while your right hand pushes down and pulls backward at the same time.

NOTES:

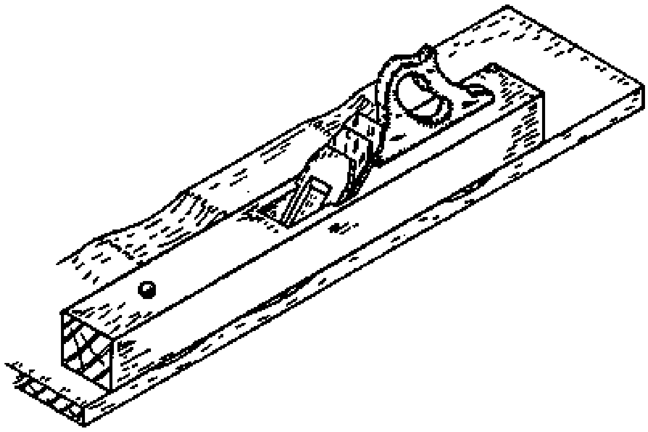

Fig. 1

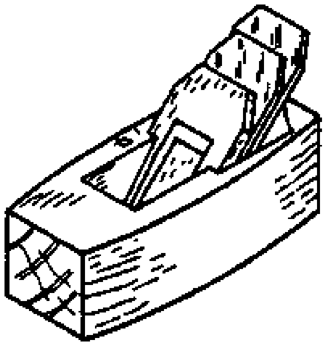

Fig. 2

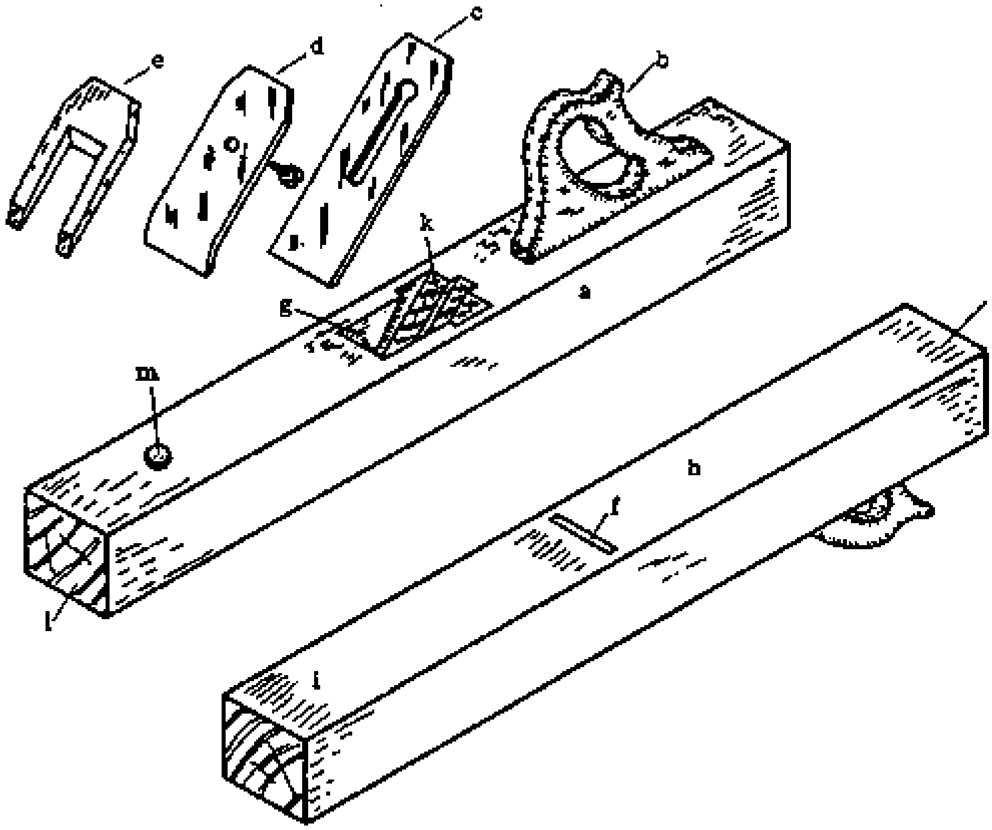

Fig. 3

PLANES

Together with the hammer, saw, try square and chisel, the plane is one of the principal tools used for carpentry work.

When timber comes from the sawmill, it is rough from the saw. Before rough-sawn timber or boards can be used for any finished work, they must be prepared so that all their sides and edges are square, flat and smooth. This preparation is done by planing them first and later smoothing them.

The tool used for the rough part of this work is called a jack plane (Fig. 1). It is used for planing the wood true and to reduce it to the correct size. The jack plane is used for general planing purposes, which is why it is called "jack", meaning generally useful.

After the board has been planed to a true surface, we use the smoothing plane (Fig. 2) to remove the rough marks of the jack plane, making a smooth surface on the board.

Other planes, used for special purposes, are discussed later in this book.

THE JACK PLANE

The jack plane (Fig. 3) consists of five main parts: the stock or body (a), the handle (b), the cutting iron (c), the cap iron (d) and the wedge (e).

The stock of the plane is made of hard wood which wears uniformly (doesn't get more worn out in some areas than in others), is tough, straight grained and keeps its shape. It is about 40 cm long. This long length lets the plane go over the low spots in the wood without cutting (Fig. 1), while it removes the high spots.

The stock holds the cutting iron, which takes off the shavings. The cutting iron sticks out through the mouth (f) on the bottom of the stock and the shavings leave the plane through the escapement (g) on top of the stock.

The bottom of the stock, which rubs along the wood during planing, is called the sole (h). The front part of the sole is called the toe (i) and the back part is the heel (j).

The cutting iron rests on the bed (k), at a 45 degree angle to the sole.

The front end of the stock is called the nose (1). To remove the cutting iron or to reduce the cut, the top of the nose is struck sharply with a hammer. In order to prevent the wood from being bruised, some planes have a small piece of metal let into the nose, to take the blows of the hammer. This is called the striking button (Fig. 3, m, previous page).

The handle is morticed into the stock behind the escapement. It should have a comfortable grip to protect the hand.

The cutting iron is made out of steel. It has a slot in the centre which ends in a screw hole. The cutting edge is ground at an angle of 25 to 30 degrees (see Maintenance of Tools, pages 92 to 99). If there is any imperfection in the cutting edge you will see a mark from it on the wood after planing.

The cap iron is made from mild steel and is secured to the cutting iron by a cheese-head screw (holding screw) which passes through the slot in the cutting iron. The cap iron helps the cutting edge to plane smoothly, by breaking up the shavings before they split ahead and tear up the fibres of the wood.

It is essential that the back of the cap iron should bed perfectly on the face of the cutting iron when they are fitted together, for even the slightest gap between the two will allow a shaving to enter and the mouth of the plane will immediately become blocked (see Maintenance of Tools, page 104).

The wedge is made of hard wood and its function is to hold the irons in place. It fits into special grooves in the sides of the escapement.

It is a good idea to keep the wooden parts of the plane in good condition by occasionally rubbing some vegetable oil, like groundnut oil (not machine oil) on them.

NOTES:

THE SMOOTHING PLANE

The smoothing plane is constructed similarly to the jack plane. It is used to finish the surface of the wood.

The smoothing plane is about 20 cm long, so it is the smallest plane that a builder uses (Fig. 2, page 54).

The smoothing plane is not used to remove large quantities of wood or to plane the wood flat and true. It is set to remove only rather fine shavings, so we use it only to make a smooth surface on the wood.

The smoothing plane has a handguard rather than a handle like the jack plane and it has the striking button on the back end of the plane instead of on the nose.

NOTES:

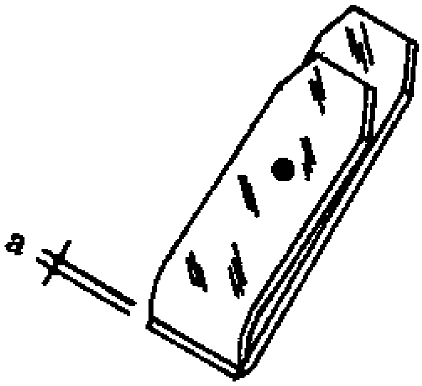

Fig. 1

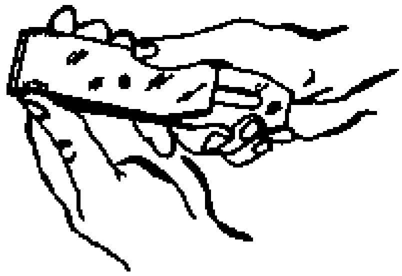

Fig. 2

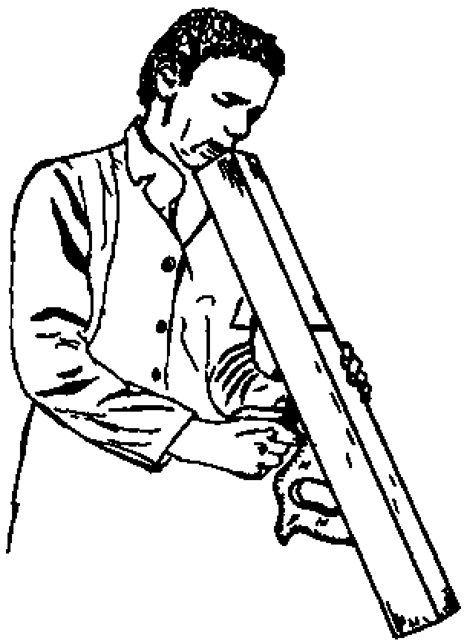

Fig. 3

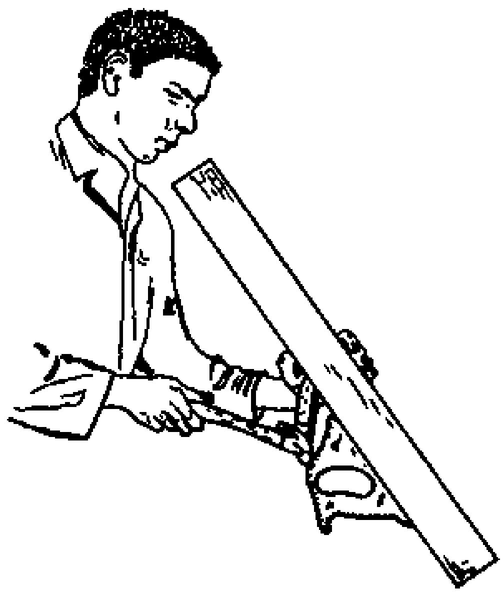

Fig. 4

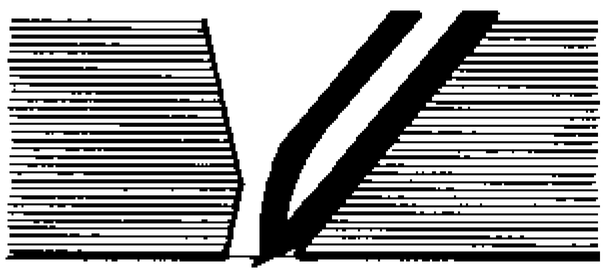

Fig. 5

HOW TO SET THE CAP IRON

The distance from the edge of the cap iron to the cutting edge is called the set (Fig. 1, a).

- The set for the jack plane should be:

  2 mm, when planing hard woods;
  3 mm, when planing soft woods.

- The set for the smoothing plane should be:

  1 mm or less.

In order to set the cap iron, first loosen the cheesehead screw which holds the two irons together; until the cap iron can move. Hold the irons as shown in Fig. 2 and be very careful that the cap iron does not touch the cutting edge as this will make it dull. Adjust the irons to the proper set and tighten the screw.

HOW TO SET THE CUTTING IRON

1. Hold the plane in your left hand and look along the sole while putting the irons in it (Fig. 3). Fix the wedge so that they are held in place lightly. Adjust them to roughly the correct position.

2. Adjust the cutting iron exactly by tapping with the clawhammer either on top of the iron (Fig. 4), so that it comes out more and takes off thicker shavings; or on the striking button to get thinner shavings.

3. After every adjustment, tighten the wedge slightly. Don't hit it too hard or you will damage the wedge.

The cutting iron should project as shown in Fig. 5 on the left page. It is important that the cutting iron projects evenly. For rough work, you will want the cutting iron to project more so as to take off thicker shavings. For fine work, where only a little wood will be planed off, the cutting iron should project less.

- After you finish using the plane, knock the cutting iron back so that it doesn't project out of the sole at all. This is to prevent damage to the cutting edge when the tool is not in use.

NOTES:

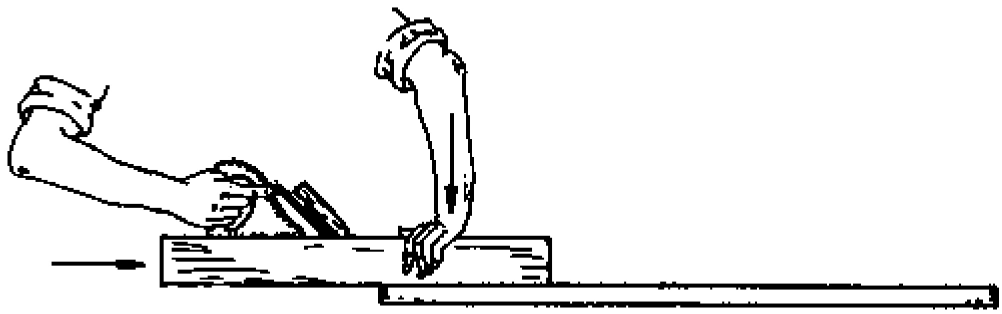

Fig. 1

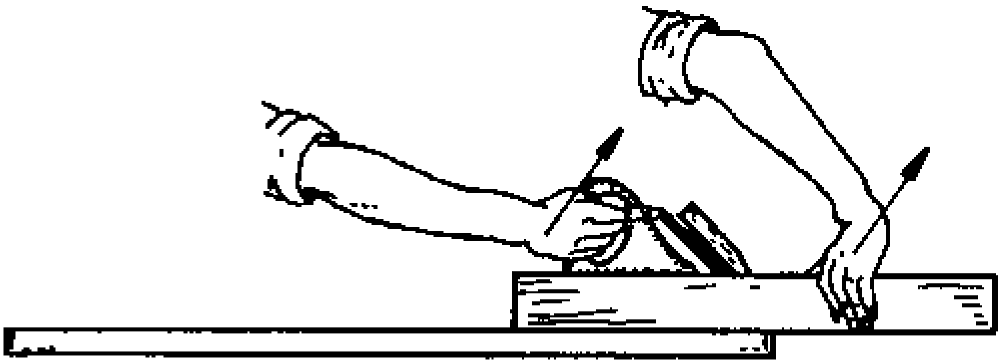

Fig. 2

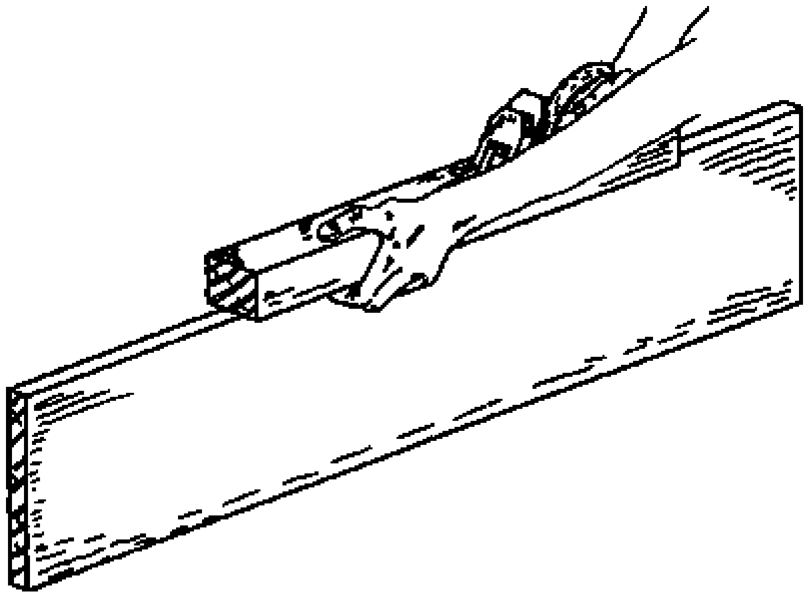

Fig. 3

PLANING

- When you use the plane, try to put pressure on it in such a way that the part of the sole which is in contact with the wood is pressed firmly to the wood surface. At the start of the stroke when the cutting iron does not yet touch the wood, put pressure on the front part of the plane (Fig. 1). When the cutting iron comes to the end of the board, press down more on the heel of the plane (Fig. 2).

- Guide the plane when you plane on edges, by curling your fingers under the plane so that they contact the board (Fig. 3).

- To obtain a good surface, always plane with the grain. If the wood is cross-grained, it is best to hold the plane at an angle to the direction of the stroke.

STUFFING

Sometimes the plane won't take off shavings anymore, but just slips over the wood without cutting it. This happens when shavings have blocked up the plane: the plane is stuffed with shavings.

- The plane may stuff when the cap iron is not fitted well to the cutting iron. Shavings can enter the gap between the irons and block the mouth of the plane (see Maintenance of Tools, page 104).

- Another cause of stuffing may be an incorrectly made plane. If you make your plane by hand, be sure to make the mouth and the escapement large enough. The mouth must not be too big however, because then it will not give a good surface when it is used to plane.

- Make sure that the ends of the wedge are not projecting over the cap iron and blocking the shavings.

NOTES:

Fig. 1

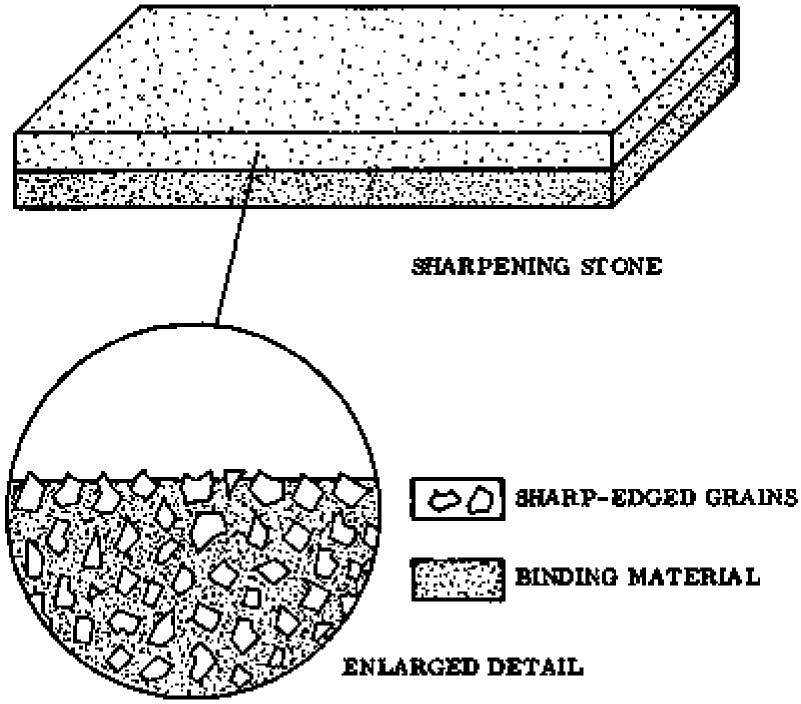

Fig. 2

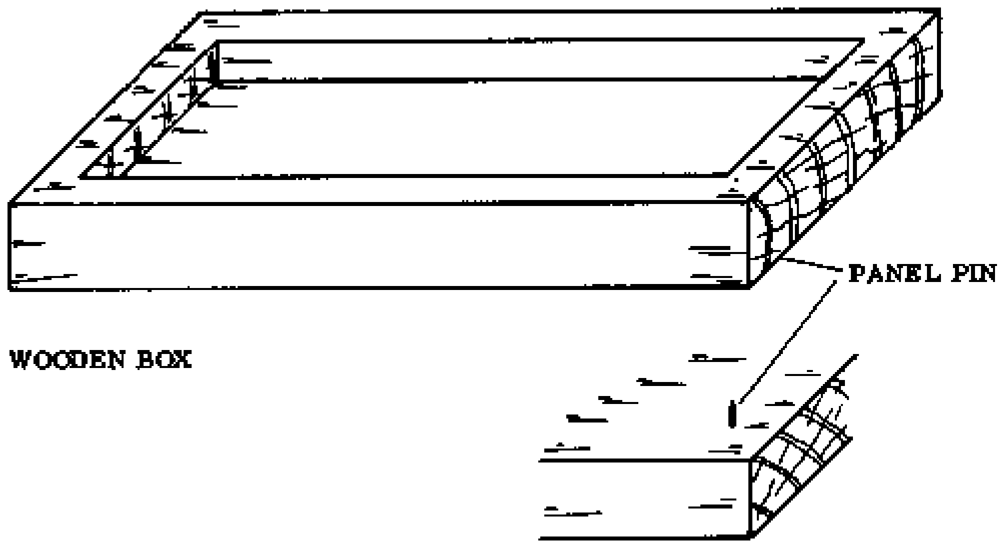

Fig. 3

THE SHARPENING STONE

The sharp edges of plane irons and chisels are made with sharpening stones. The stone acts like a file to wear away the portion of the tool that is rubbed on it.

There are natural and artificial (man-made) stones. Nowadays we use mostly the artificial ones. The grit (rough surface) of the stone consists of hard, sharp-edged grains, embedded in a binding material (Fig. 2). The bigger the grains, the coarser the stone. Stones can be coarse, medium, or fine; in Rural Building we use a combination stone, one side of which is coarse and the other fine (Fig. 1). The coarse side cuts quickly, but does not give a very keen (sharp) edge. The fine grit cuts slowly and gives a keen edge.

Take very good care of your sharpening stone. House it in a solid wooden box. On each corner of the box, drive a panel pin almost home and file the heads to sharp points (Fig. 3). The pins will anchor the box and the stone to the bench when you are sharpening tools.

HOW TO USE THE STONE

- Before using the stone, soak it in water for a few minutes. Use water during the sharpening to wash away the metal particles. After use, clean the stone with water. The water keeps the stone from glazing (becoming clogged with small metal particles between the grains, which makes it smoother and less efficient to use).

- Try to keep the stone worn down evenly and flat by using the entire surface, not rubbing just in the centre.

- The end nearest you is less easy to use, so turn the stone around occasionally to let both ends wear down equally.

- If a stone is worn hollow, it can be made flat again by rubbing it on a flat stone or cement surface, using sand and water to grind it.

NOTES:

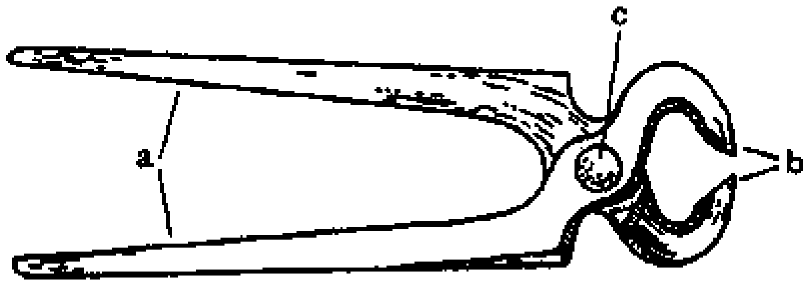

Fig. 1

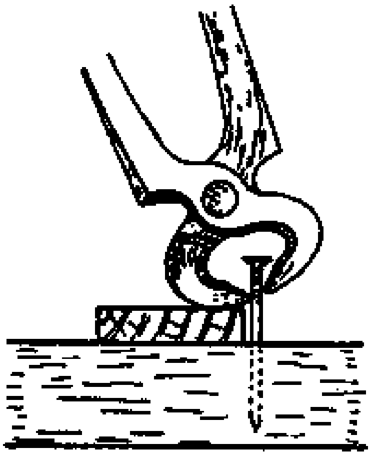
Fig. 2

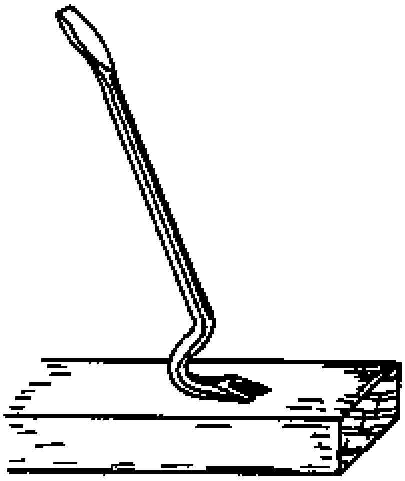
Fig. 3

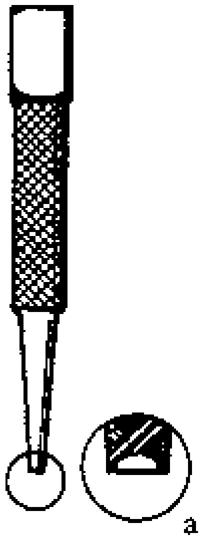

Fig. 4

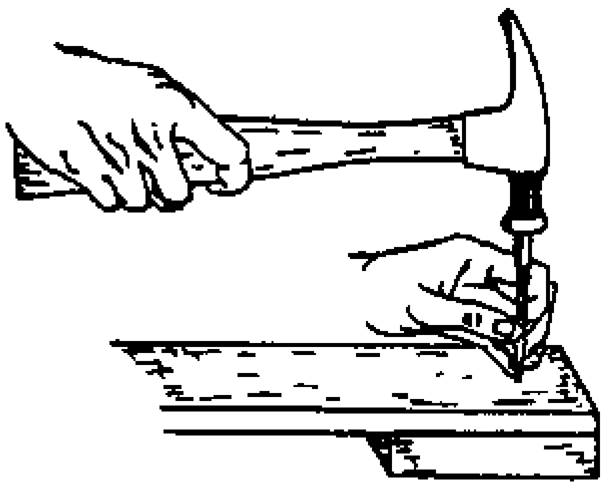
Fig. 5

OTHER TOOLS FOR EXTRACTING AND PUNCHING NAILS

PINCERS

Pincers (Fig. 1) are used chiefly for extracting nails which have become bent in driving. When using the pincers, protect the wood surface from bruising by using a small piece of wood underneath (Fig. 2).

Pincers have three main parts: the arms (a), made of steel, the jaws (b), made of hardened steel and sharpened to grip nails etc. and the rivet (c) which connects the two arms.

THE CROWBAR

This is an iron bar with a forged end (Fig. 3) used for pulling big nails out of timber and as a lever to move heavy objects. Other uses are: to open crates, or to loosen boards of concrete forms.

When a lot of force is needed to get out a nail, you use a crowbar so as not to break the handle of your hammer.

For lifting very heavy objects, an iron bar should be used in place of the smaller crowbar.

THE NAIL PUNCH

The nail punch (Fig. 4) is used along with the hammer to drive the heads of nails below the surface of the wood and to clench nails that go through to the other side of the board and stick out.

Nail punches are generally cylindrical in shape, with concave points to keep the punch from slipping off the nailhead (Fig. 4a). If no punch is available, a large blunt nail can be used instead.

- To punch a nail under the surface of the wood, hold the punch in place on the nailhead, steadying your hand on the board (Fig. 5), and hit it with the hammer.

NOTES:

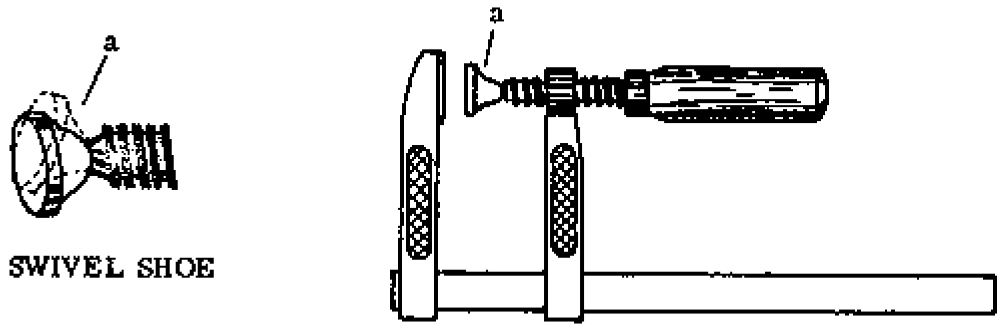

Fig. 1

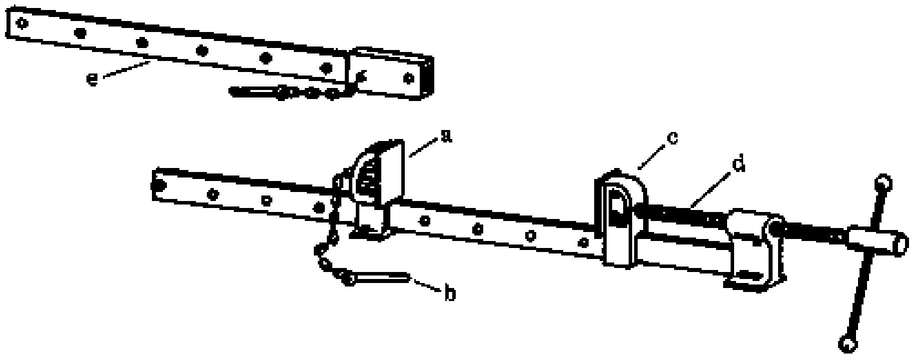

Fig. 2

Fig. 3

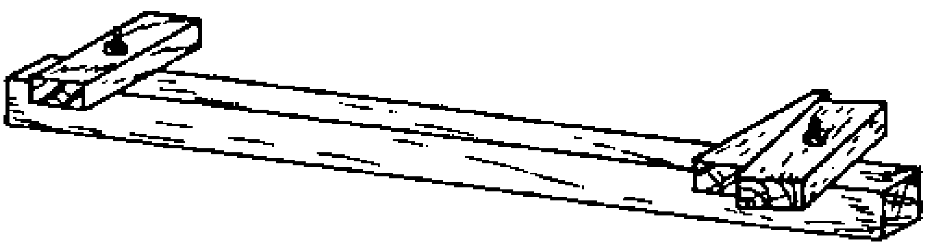

Fig. 4

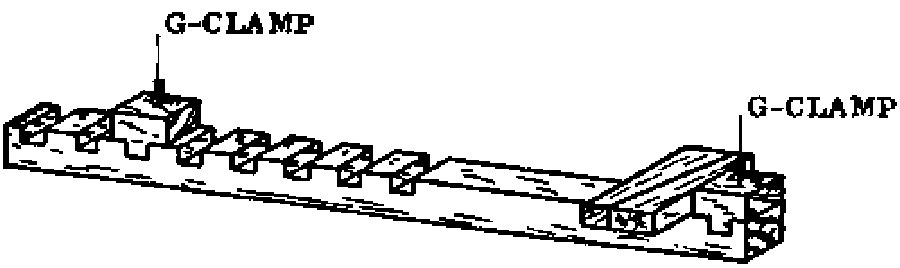

Fig. 5

CLAMPS

THE G-CLAMP

The G-clamp (Fig. 1) is used to hold the job under control while it is worked upon. It is used in the workshop as well as on the building site and can be used for holding small pieces together while they are being glued.

Except for the handle, which is made of wood, the parts are all steel. The shoe (a) is set on a swivel, which allows it to move and adapt to the surface of the job. These clamps are available in different sizes, up to 240 cm.

THE METAL SASH CLAMP

Sash clamps (Fig. 2) are used for pushing together joints and holding parts for glueing or nailing, or holding wood when making rebates.

The adjustable shoe (a) is fixed on the bar by the pin (b). The clamping shoe (c) is tightened against the job by the screw (d).

The length of the clamps can be between 100 and 200 cm, and they can be made longer by an extension bar (e).

- If more than one clamp is used on a piece, take care that they are set in line, so that they don't twist the piece.

THE WOODEN SASH CLAMP

Homemade clamps (Figs. 3, 4 & 5) can serve the same purposes as a metal one. The job is tightened by means of a wedge.

For quick jobs, a clamp can be made as shown in Fig. 3. Here the different members are nailed together according to the required size of the sash clamp.

If a more permanent, adjustable clamp is required, it can be made as shown in Figs. 4 or 5.

NOTES:

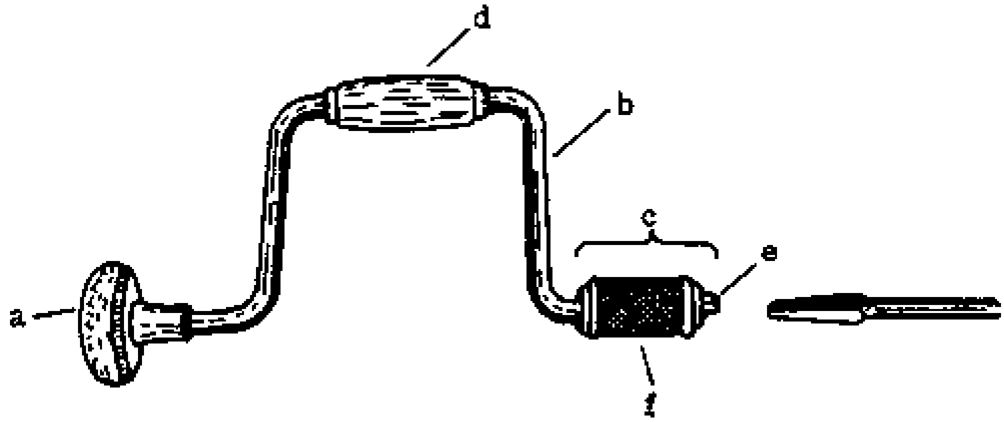

Fig. 1

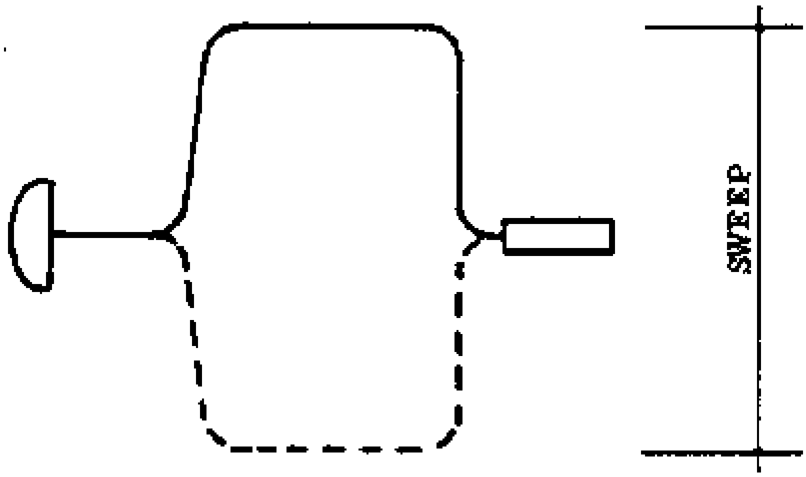

Fig. 2

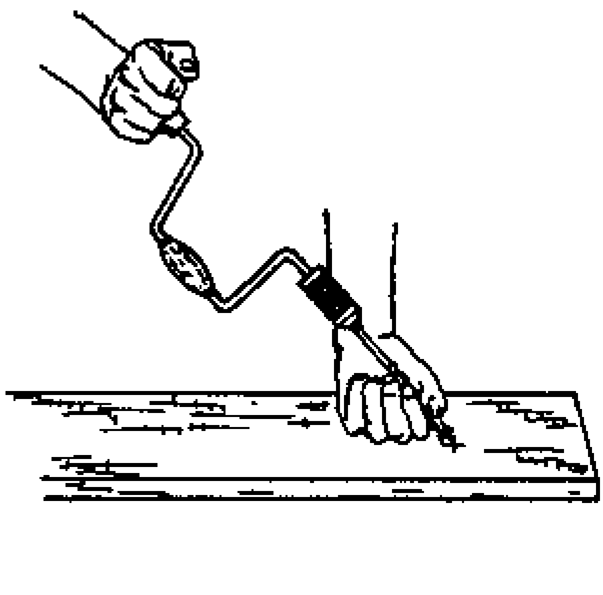

Fig. 3

THE BRACE (PLAIN AND RATCHET)

This is a cranked tool used to turn drill bits and countersinks, thus making holes in wood.

Its parts are (Fig. 1): the head (a), the crank or bow (b), and the chuck (c).

The head is a hard wooden or plastic knob, which is fixed to the bow and turns on a ball bearing.

The crank, which is formed by the rectangular bend, can be 10 to 20 cm in width giving a sweep of 20 to 40 cm, which determines the size of the brace (Fig. 2).

The wider the brace, the more force you can apply with it, but also, the distance your arm must travel is longer and more tiring and the bit may be broken more easily.

A handle (d) is attached to the crank by steel collars. It should revolve freely.

The chuck holds the various bits (the drilling parts). The bits are gripped by jaws (e). There are different kinds of jaws. The square shank of the bit fits into the square opening of the chuck. When the socket (f) is turned, it tightens the jaws over the shank of the bit.

There is a more advanced type of brace available, which is the ratchet brace. The ratchet makes it possible to use the brace in places where it is impossible to make a complete turn of the crank with an ordinary brace.

HOW TO USE THE BRACE

1. For accurate boring, first mark the location of the centre of the hole with two lines crossing each other, or by making a small hole with a sharp tool (Fig. 3).

2. With the knuckles of one hand down against the board, guide the point of the bit carefully into place, while with your other hand you exert a slight pressure on the head of the brace (Fig. 3).

3. As the bit starts boring, be careful to keep it perpendicular to the surface (unless you want the hole to be bored at an angle).

NOTES:

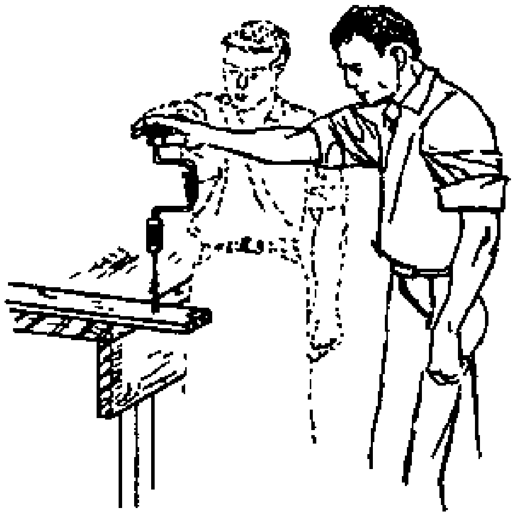

Fig. 1

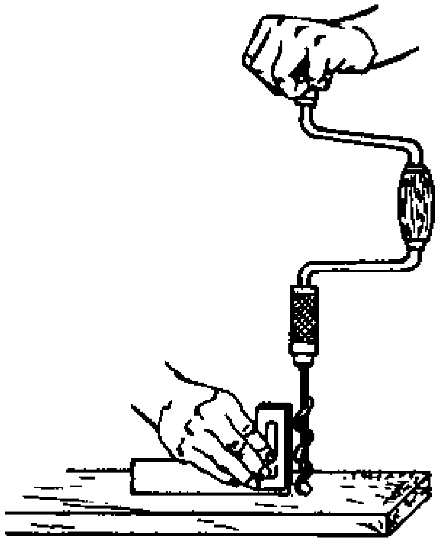

Fig. 2

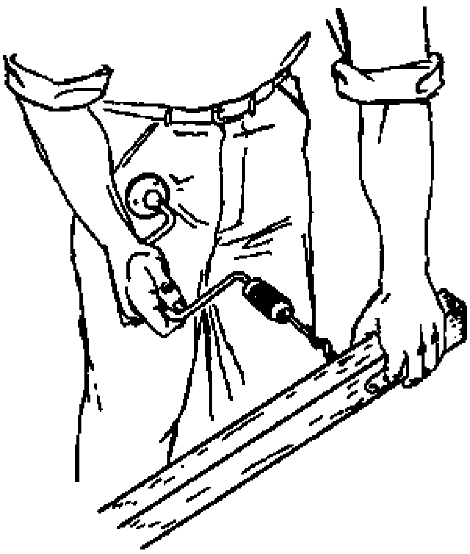

Fig. 3

It is fairly easy to tell if the brace is leaning to the right or left, but difficult to know if it is leaning away from you or towards you.

- For jobs where this is important, it is best to ask another person to stand to one side and tell you whether you are holding the brace upright.

- Another way to see whether the brace is boring square to the surface is to step. back a little, steadying the brace with one hand, and sight. Then move around and sight in the other direction, at about right angles to the first sighting (Fig. 1).

- A square can be used to check if the bit is boring straight (Fig. 2).

- If a hole is to be bored completely through a board, bore until the point of the bit can be felt on the other side (Fig. 3), then turn the board over and bore from the other side. This prevents splintering around the edge of the hole where the drill comes out.

- You can also prevent splintering by clamping a piece of waste wood on the other side of the board where the drill will come out. The drilling can then be done from one side only with no danger of splintering the wood.

NOTES:

Fig. 1

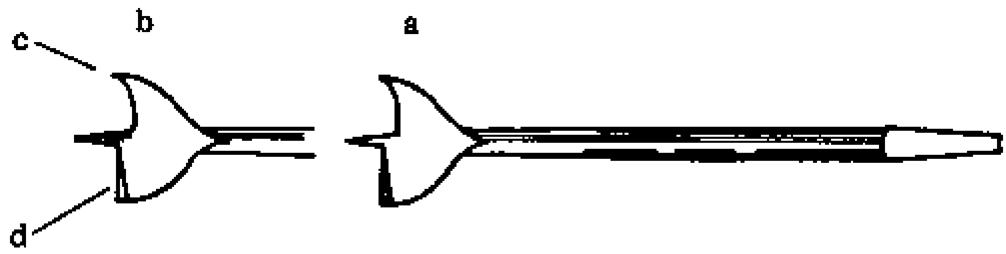

Fig. 2

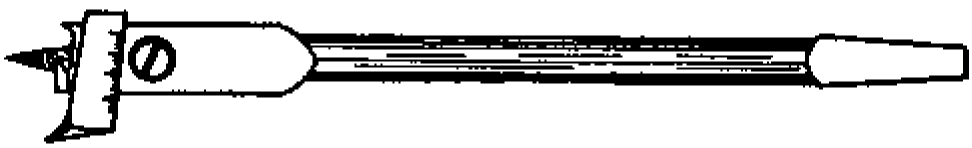

Fig. 3

Fig. 4

BITS AND DRILLS

Boring bits are used with a brace to bore holes in wood. They have a square-head shank, which fits the chuck of the brace. The shank below the head is cylindrical.

Boring drills usually have a cylindrical shank which fits into a special kind of hand operated drilling machine.

The size of the bit or drill is stamped on the shank, in mm.

AUGER BITS

The twisted part of the auger bit (Fig. 1) guides it and removes the waste. The screw-nose (a) draws the bit into the wood, the two spurs (b) scribe the diameter of the hole, and the cutter (c) cuts it.

Auger bits are used to drill deep holes. They come in sizes from 4 to 40 mm.

CENTRE BITS

The centre bit is used for boring holes in thin timber only, because it doesn't guide itself as the auger bit does.

Centre bits are available with either a point or a screw-nose (Fig. 2a or b). The screw-nose type is preferred over the type with a point, because it draws the bit into the wood.

The spur (c) cuts the rim of the hole and the router (d) removes the waste.

EXPANSION BITS

These bits are used for drilling large holes. The cutter is adjustable with a screw (Fig. 3). The size of the hole can range from 13 to 40 mm in diameter. Special types can expand up to 80 mm and more.

TWIST DRILLS

These drills have twisted flutes (Fig. 4) to bore clean holes in hard or soft woods. One of the main advantages of the twist drill is that it is available in sizes from 1 mm and up.

Besides the drill for wood, there are harder types which can drill holes in metal, stone and concrete. Even though they may look the same, you should never use woodworking drills for metal work.

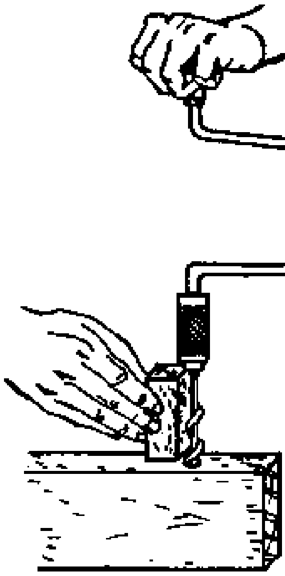

Fig. 1

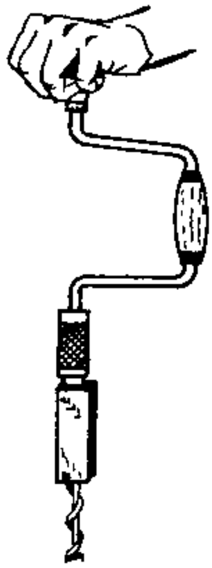

Fig. 2

Fig. 3

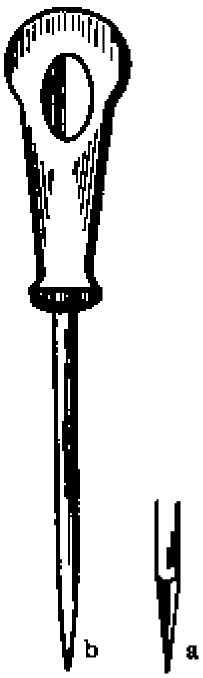

Fig. 4

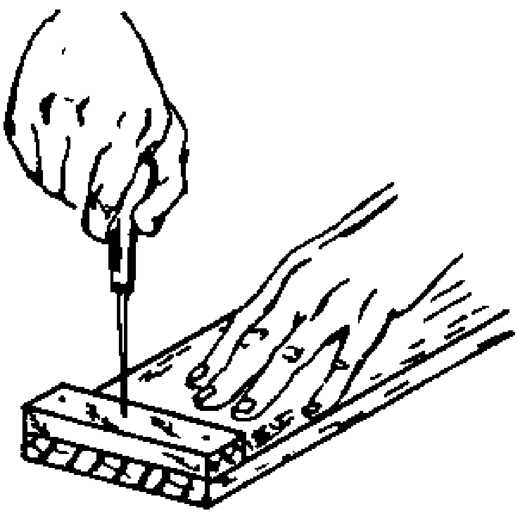

Fig. 5

DEPTH STOPS

If you are drilling a number of holes at the same depth, you can save time by cutting a wooden block to the correct size and using it as a gauge (Fig. 1), or boring a hole through the block and fitting it on the bit as shown in Fig. 2.

COUNTERSINKS

Countersinks are used to enlarge the top of a screw hole so that the screw head can fit below the surface of the wood. The most common type is the rosehead countersink (Fig. 3).

AWLS

An awl is a thin, pointed steel rod, which is fitted with a wooden or plastic handle.

Awls are used for marking or piercing holes in wood. The tip can be either square or rounded (Fig. 4a or b). Awls with square shaped tips are preferred for piercing holes for small screws or nails.

- Force the awl into the wood with a turning motion, left and right, so that it cuts its way through the wood (Fig. 5).

- An awl can easily be made from a thin steel rod, by hammering one end to a square shape and sharpening it, then fitting a handle to the other end.

NOTES:

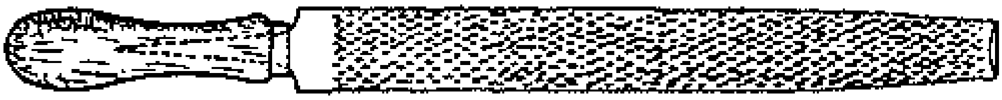

Fig. 1

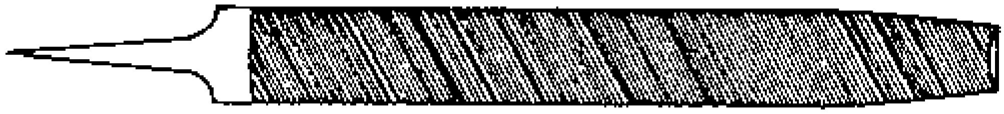

Fig. 2

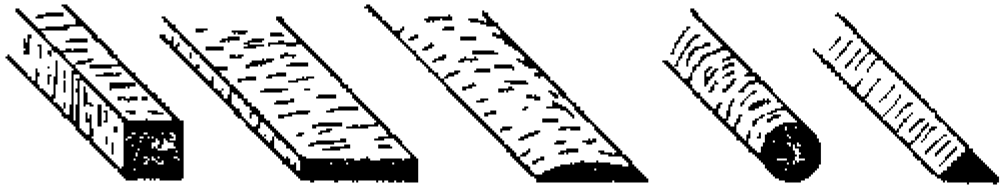

Fig. 3

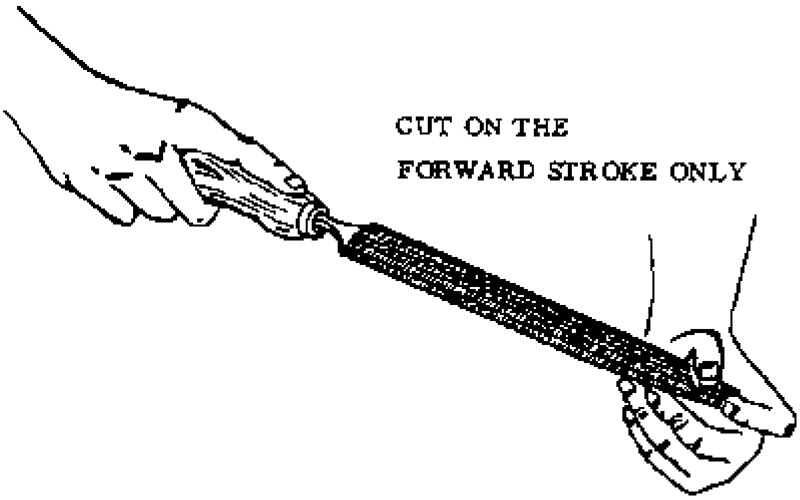

Fig. 4

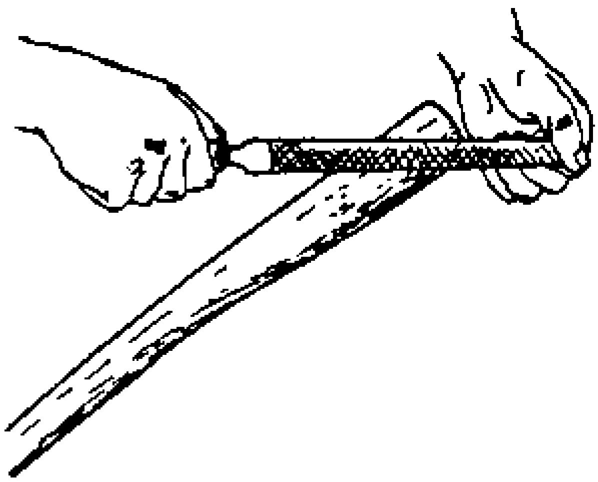

Fig. 5

RASPS AND FILES

Rasps (Fig. 1) and files (Fig. 2) are used in woodwork for smoothing wood which cannot be worked easily with any other kind of cutting tool.

- NOTE: Special metalworking files are used to work metal and sharpen tools. Never use woodworking files on metal.

The difference between the rasp and file is in the cut. Files have a series of chisel cuts across their surface, while rasps have many separate small teeth. The rasp is more coarse and cuts faster and rougher than the file.

The handles on both rasps and files must be firmly seated.

Files and rasps are available in different grades of coarseness and in different shapes. Some common shapes for files are (Fig. 3): square, flat, half-round, round and triangular (sawfiles). Rasps are usually half-round or round in section.

HOW TO USE RASPS AND FILES

- Hold the tool at a slight angle to the direction of filing (Fig. 4). By doing this, you file over a wider area and avoid making a hollow spot in one place.

- The actual cutting is done on the forward stroke only.

- When you are filing a curved piece, give the file a sideways sliding motion at the same time as you move it forwards. This is so that the file follows the curve better and doesn't produce flat spots (Fig. 5).

- The rasp is used first, to get the rough shape as quickly as possible. Then the file is used to remove the coarse marks left by the rasp.

- Do not clean rasps or files with sharp tools or steel brushes. To clean them, scrub them with a hard-bristled brush.

NOTES:

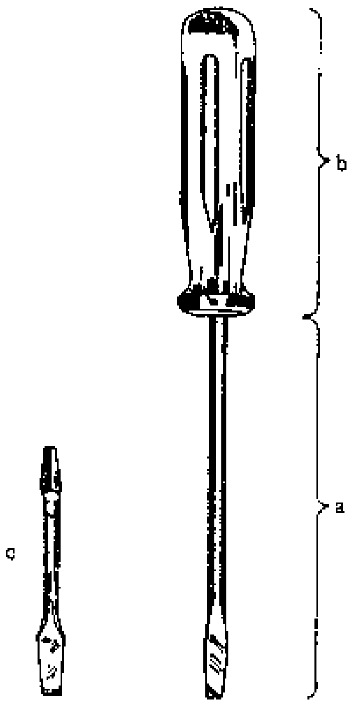

Fig. 1

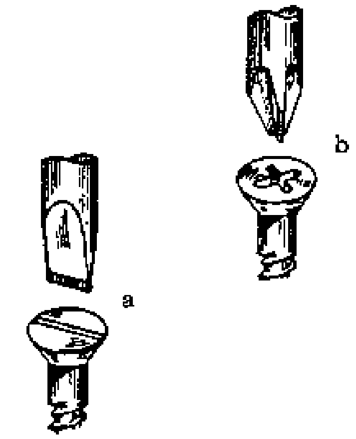

Fig. 2

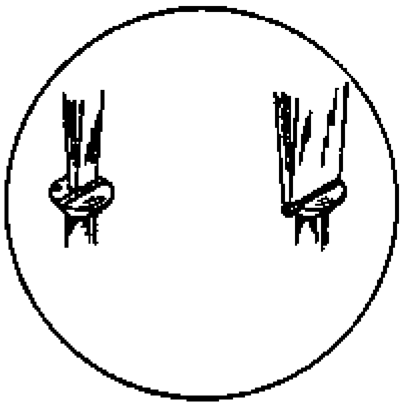

Fig. 3

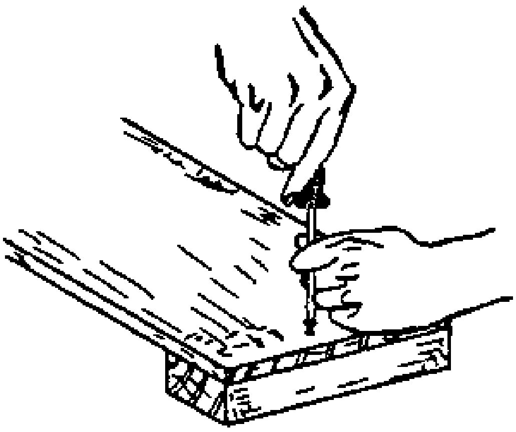

Fig. 4

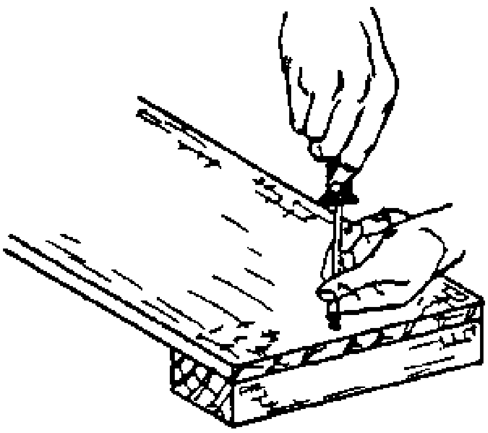

Fig. 5

THE SCREWDRIVER

Screwdrivers are used for inserting and removing screws. Many different types of screwdrivers are available. There are also screwdriver bits (Fig. 1, c) to be used with a brace.

The parts of the screwdriver are (Fig. 1): the blade (a) and the handle (b). The blade is either flat or cylindrical and the tip is either ground to a flat straight edge (Fig. 2a) or has a Philips shape (Fig. 2b) to fit different screws. The other end of the blade is shaped to a tang to fit into the handle.

The handle is made out of tough wood or plastic and is sometimes fitted with a ferrule to prevent splintering and keep the blade from turning in the handle.

The size of the screwdriver is determined by the length of the blade from the tip to the handle and by the diameter of the blade.

In order to work efficiently and not damage the slots of the screwheads, select a screwdriver with a tip that is the same width as the slot of the screw. A tip which is too small can slip and damage the slot, while one which is wider than the screwhead can scrape and damage the workface around the screw (Fig. 3).

The screwdriver tip must be properly formed (see Maintenance of Tools). A badly formed tip will cause the screwdriver to slip out of the slot and damage it.

HOW TO USE THE SCREWDRIVER

- Grasp the handle firmly in your right hand with your palm resting on the end of the handle; the thumb and forefinger extend along the handle.

- While the right hand changes grips to turn the handle, the left hand steadies the tool and keeps it in the slot. Figs. 4 and 5 show two methods of using a screwdriver.

NOTES:

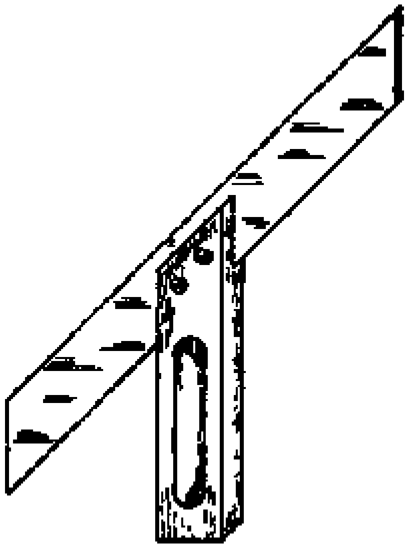

Fig. 1

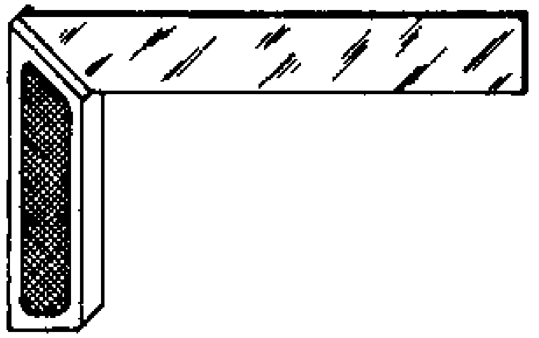

Fig. 2

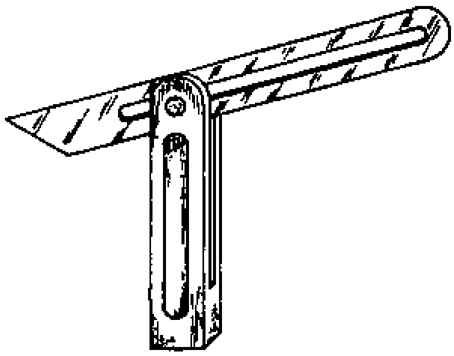

Fig. 3

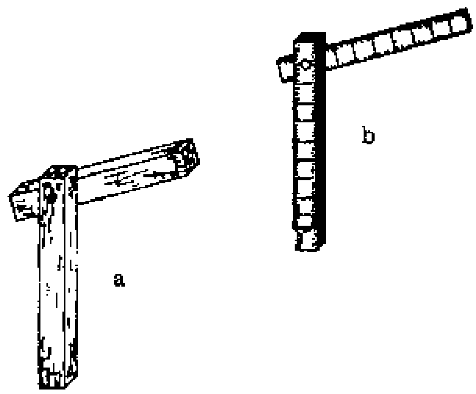

Fig. 4

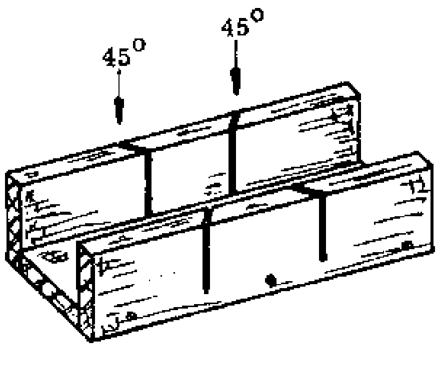

Fig. 5

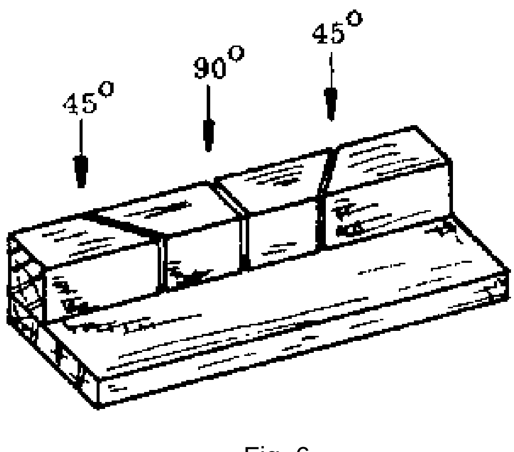

Fig. 6

TOOLS FOR MEASURING AND MITRING ANGLES

THE MITRE SQUARE

This is used to mark and test angles of 45 and 135 degrees. The blade is fixed at 45 degrees to the stock (Fig. 1).

THE TRY AND MITRE SQUARE

This is a combination of a try square and a mitre square. The end of the stock where it meets the blade is cut at 45 degrees (Fig. 2), so the square can be used for setting out and testing angles of 45 and 135 degrees, as well as 90 degrees.

THE SLIDING BEVEL

This is an adjustable square for marking out, testing and duplicating angles from 0 to 180 degrees. It has a stock and a slotted blade which can be adjusted to any angle and is held in place by a screw or a wing nut (Fig. 3).

A simple sliding bevel can be made by fixing two pieces of wood together with a nail or screw (Fig. 4a). Another method is to use the first section of a folding rule (Fig. 4b).

THE MITRE BOX

The mitre box (Fig. 5) is built of three pieces of wood, one forming the base and two parallel sides. It has saw kerfs in the sides at 45 degrees to the left and right to guide the saw in cutting mitres (cutting at a 45 degree angle).

THE MITRE BLOCK

This is used to mitre small sections of wood accurately. It is made of two pieces of wood with three cuts in the top piece; 45 degree cuts left and right and a 90 degree cut in the centre to help in sawing accurately square (Fig. 6).

- Mitre boxes and mitre blocks should be made of very hard wood and the saw cuts should be made with the same saw which will be used in them.

NOTES:

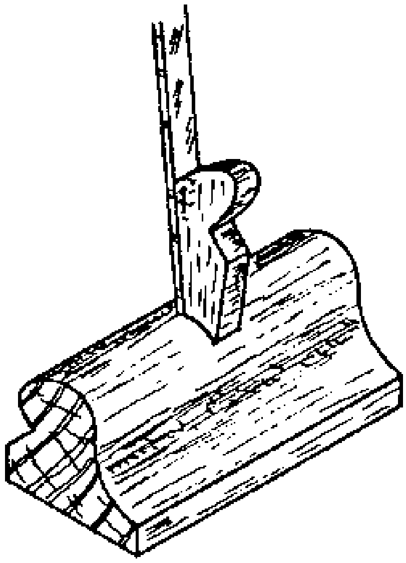

Fig. 1

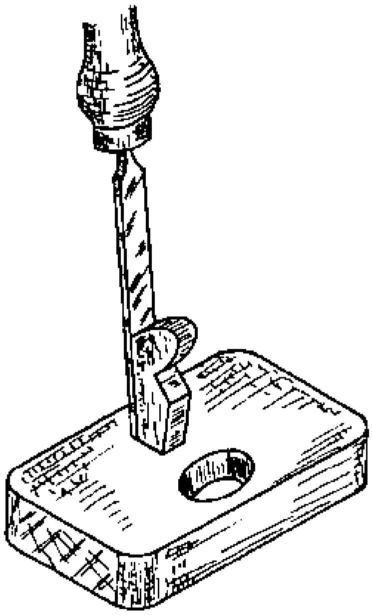

Fig. 2

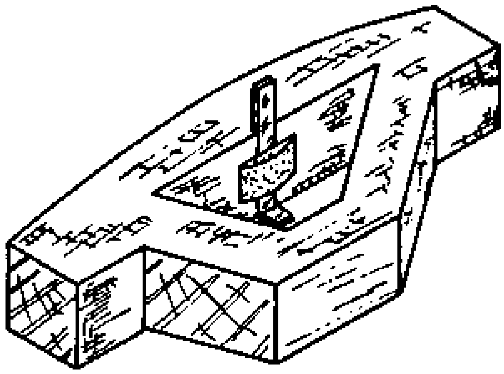

Fig. 3

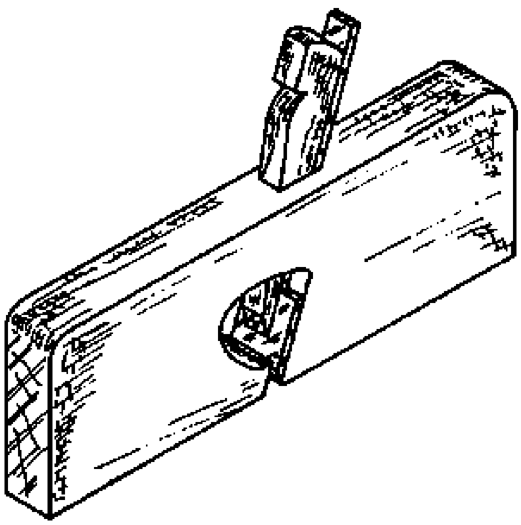

Fig. 4

ADDITIONAL PLANES FOR THE RURAL BUILDER

THE ROUTER PLANE

This is a tool adapted from the "old woman's tooth" (Fig. 1) shown on the left page. It is used for planing the bottoms of grooves, trenches, etc. after they have been chopped out with a chisel and mallet.

There is a wooden type as well as a metal type. The wooden type has the advantage that it can be made locally (Fig. 3).

For our Rural Building course, the old woman's tooth has the advantage that an ordinary chisel can be used as a cutting iron (Fig. 2), making it unnecessary to obtain a special iron.

THE REBATE PLANE

The rebate plane is used for working along the edge of timber. It is used for making rebates as well as for cleaning them up.

The use of the rebate plane is described in the section on Rebated Butt Joints, in Rural Building, Basic Knowledge, page 132).

NOTES:

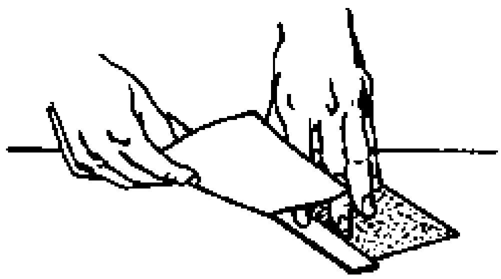

Fig. 1

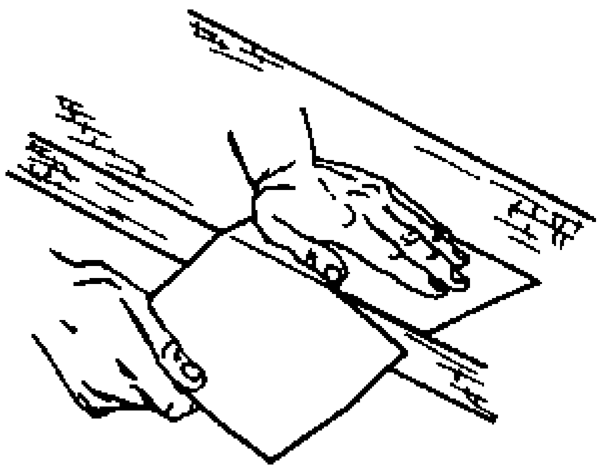

Fig. 2

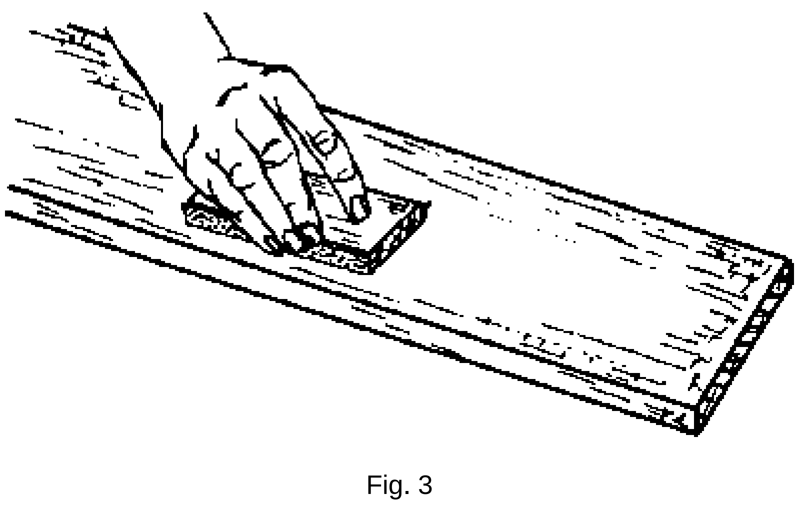

Fig. 3

SANDPAPER

Sandpaper is used to smooth wood surfaces, remove old paint, etc. It is used after all the planing work is done; sandpaper cannot be used instead of the smoothing plane.

Sandpaper is made from grains of very hard material glued to paper. The sharp edges of the grains are what cut into the surface of the wood. The sharper the grains, the better the sanding effect.

Sandpaper is graded according to the space between the grains: the more widely spaced the coarser the grade. Use coarse grades for rough surfaces or for the first sanding and finer grades for the final sanding. The commonly used grades are from No. 00 (fine) to No. 2 (coarse). Usually No. 1/2 or No. 1 is satisfactory for coarse sanding on wood and No. 0 for the final or finished sanding.

HOW TO USE SANDPAPER

- Tear the paper to the right size by creasing it and then tearing it over the edge of a bench or ruler (Figs. 1 & 2).

- Wrap it part way around a flat block of wood (Fig. 3).

- For ordinary sanding, move the block back and forth with the grain; not in a circular motion or across the grain, which will roughen and scratch the wood instead of smoothing it (Fig. 3).

- If you are sanding off old paint, this may be done across the grain.

- Keep the block flat to the wood surface, particularly on narrow edges and be careful not to round the corners.

- Use only moderate pressure on the sandpaper block. Too much pressure may cause the paper to wrinkle or tear. Keep the sandpaper free of dust by knocking and shaking it out often.

NOTES:

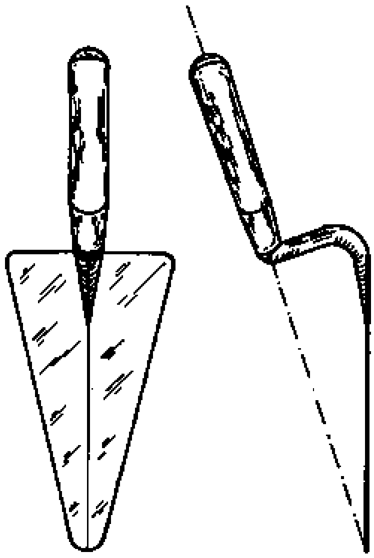

TRIANGULAR TROWEL

Fig. 1

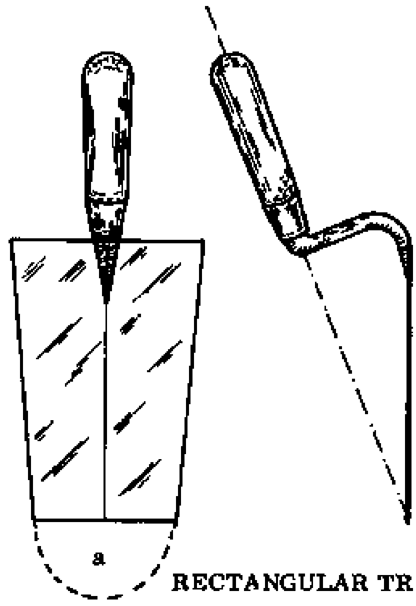

RECTANGULAR TROWEL

Fig. 2

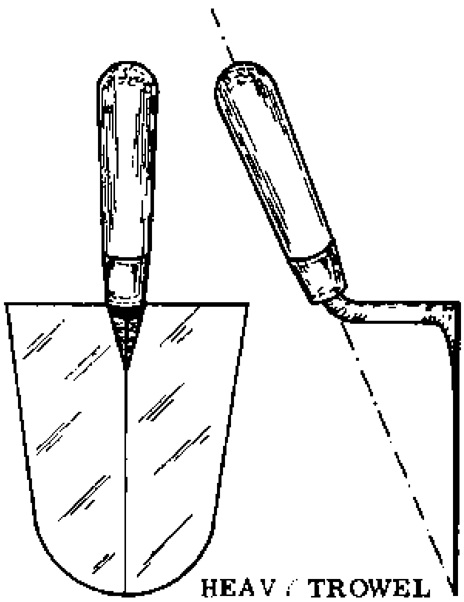

HEAV / TROWEL

Fig. 3

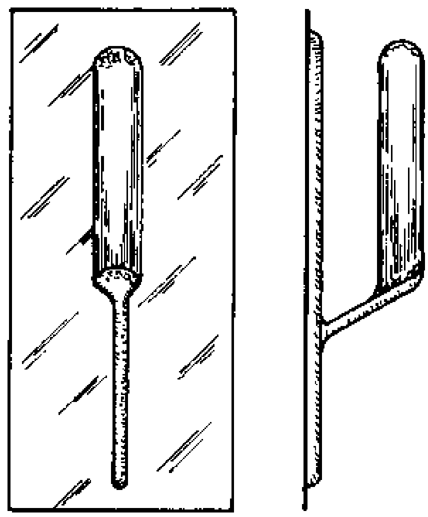

STEEL FLOAT

Fig. 4

OPTIONAL TOOLS

There are many useful tools which the apprentice will eventually come into contact with and which perhaps he would like to purchase.

Although the set of tools supplied to the Rural Builder will be adequate to do the work, a good craftsman will always try to improve upon his tool set.

Therefore, the purpose of the following introduction to some additional tools is simply to round out the apprentice's general knowledge about tools.

OTHER TYPES OF TROWELS

Fig. 1 shows a triangular trowel, while the one in Fig. 2 is almost rectangular. The rectangular type of trowel is also available with a rounded tip (Fig. 2a). All three types of trowel are useful in Rural Building and the decision of which one to use depends merely upon their availability and the Builder's personal preference.

Fig. 3 shows a heavier trowel designed specially for concrete work. The head is rounded to make it easier to pick up concrete. The blade is rather thick compared to other trowels and the straight shank is connected to the blade at a 90 degree angle to reduce the flexibility of the trowel.

STEEL FLOAT

The steel float consists of a thin rectangular blade about 12 cm wide by 28 cm long. There is a handle fitted to the back side of the blade (Fig. 4).

This is a finishing tool used for smoothing surfaces such as floors and plaster.

NOTES:

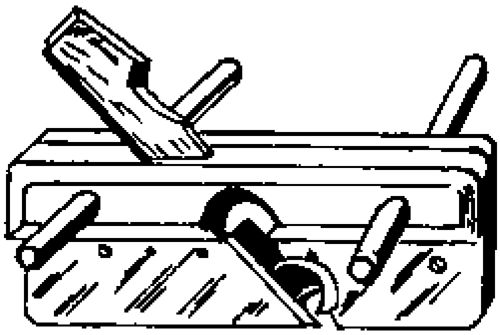

PLOUGH PLANE

Fig. 1

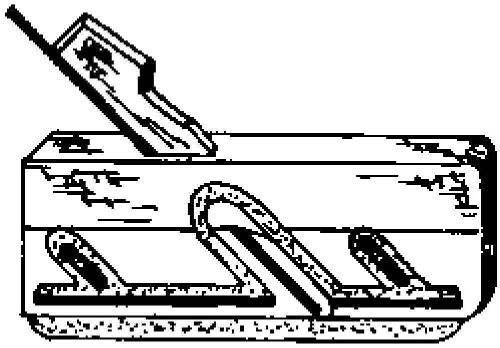

FILLISTER PLANE

Fig. 2

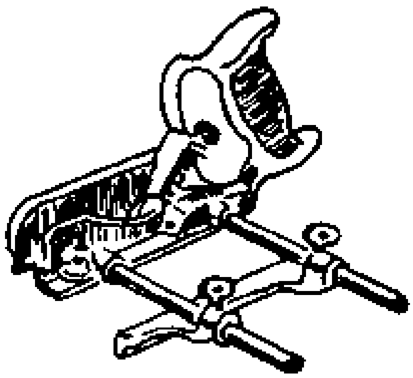

COMBINATION PLANE

Fig. 3

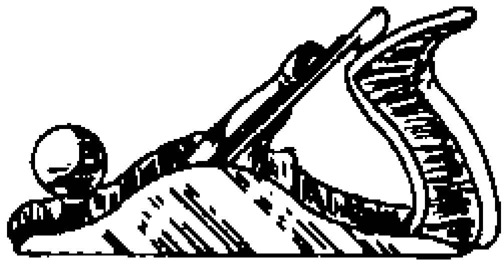

METAL PLANE

Fig. 4

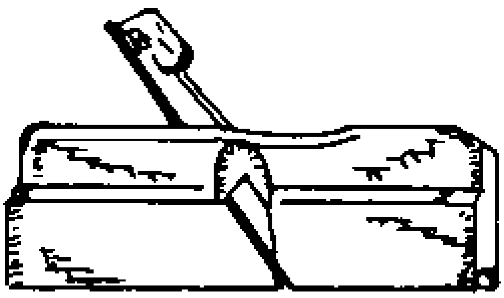

MOULDING PLANE

Fig. 5

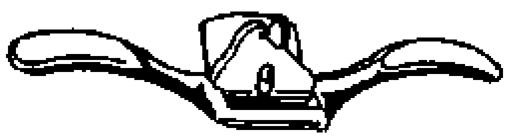

SPOKE SHAVE

Fig. 6

OTHER PLANES

There are many varieties of planes available for different jobs. However, in Rural Building, we can do a good job with the four different planes we have and we will leave it to the future craftsman to decide if it is necessary to obtain any other plane in addition.

Below we describe briefly some other planes which might be a choice for the future builder. They are shown on the left page.

The plough plane (Fig. 1) is used to make grooves in wood.

The fillister plane (Fig. 2) is used for making rebates.

The combination plane (Fig. 3) is a combination of the fillister plane, plough plane and moulding plane.

There are various types of metal planes (Fig. 4) used for different purposes in furniture making.

The moulding plane (Fig. 5) resembles a rebate plane and it is used for making profiles.

The spoke shave (Fig. 6) is used to true and smooth edges after sawing. NOTES:

NOTES:

PART 2: MAINTENANCE OF TOOLS

The importance of good tool maintenance is something which is readily appreciated by everyone; the beginner will quickly realize that without maintenance, the finest tools are no more useful than the most inferior ones.

Apart from their general maintenance in terms of cleanliness, rust prevention and avoidance of damage from rough handling, the most important aspect of maintaining tools is in the preparation and preservation of good cutting edges.

Until one has some experience in tool maintenance, one easily overlooks the fact that from the moment that a fine cutting edge is formed, it becomes the most delicate and easily damaged part of the tool. Even the lightest touch of another piece of metal can spoil the edge, wasting the work which has gone into making it.

Such damage can be avoided in commonsense ways such as:

- By keeping the bench clear of tools which are not in use.

- By laying planes down on their sides or keeping the toe raised on a wood support so that the plane iron does not touch the bench top.

- By keeping chisels and saws in the box when they are not in use.

- By keeping the bench clear of ironmongery such as nails, screws, hinges, etc.

- And by putting tools down on wooden surfaces only.

NOTES:

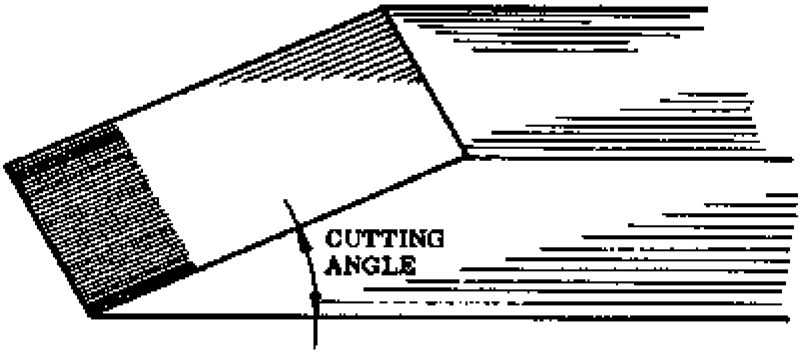

Fig. 1

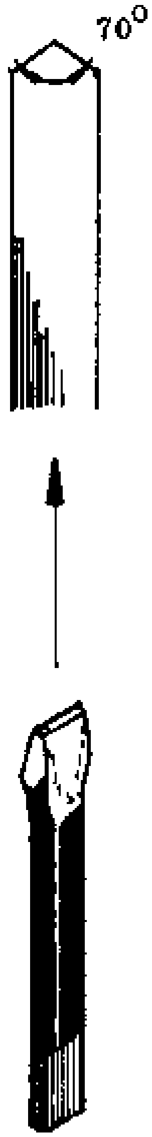

Fig. 2

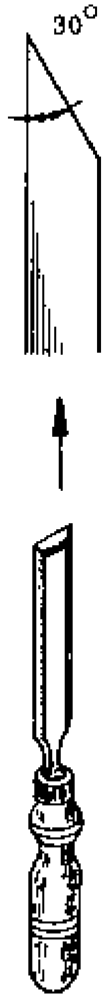

Fig. 3

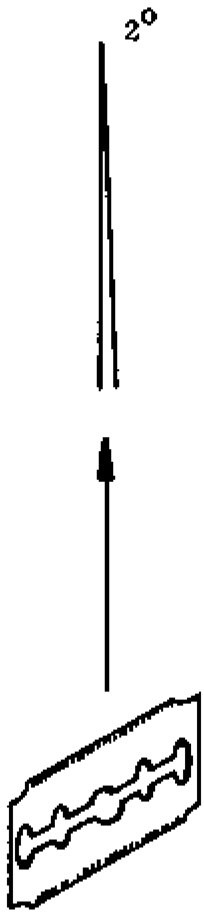

Fig. 4

CUTTING ANGLES

Before you can properly maintain your tools, you need to know something about the shape of the cutting edges on tools like plane irons and chisels. A cutting edge is formed where the two faces of a wedge come together at an angle, which is the cutting angle (Fig. 1).

In general, the harder the material that you want to cut, the larger the cutting angle you need. For example, to cut steel or stone you need a tool with a cutting angle of about 70 degrees, like the cold chisel (Fig. 2). To cut a soft material like leather, a knife or a razor blade with a cutting angle of only a few degrees (Fig. 4) will work efficiently. Of course, you would not be able to cut steel with a razor blade.

In both these cases, it is important that the cutting edge of the tools is sharp, although they have different cutting angles.

For cutting wood, we generally have one standard cutting angle for the tools like plane irons and chisels, although different kinds of wood can vary quite a bit in hardness. This standard angle of between 25 and 35 degrees is more or less suitable for all types of wood (Fig. 3). The craftsman will find with experience the right cutting angle for his needs.

Note that the smaller the cutting angle, the more easily the tool will cut and also the sooner it will become dull.

NOTES:

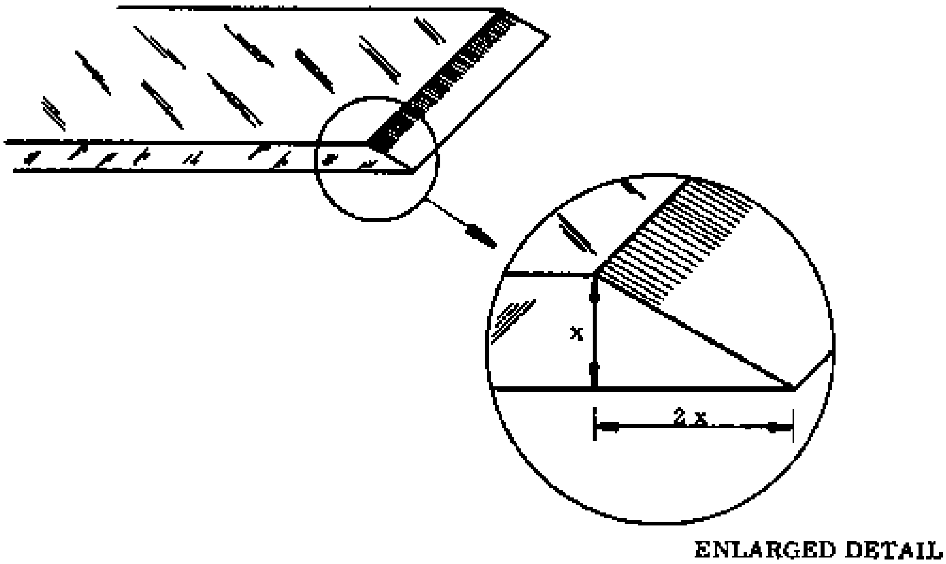

Fig. 1

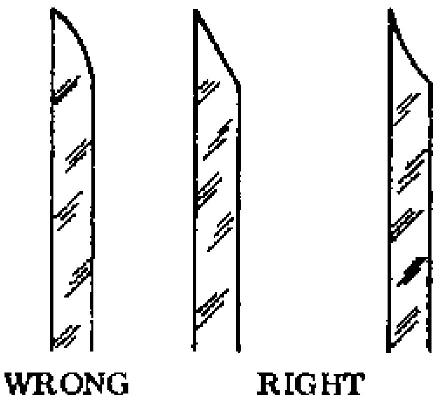

Fig. 2

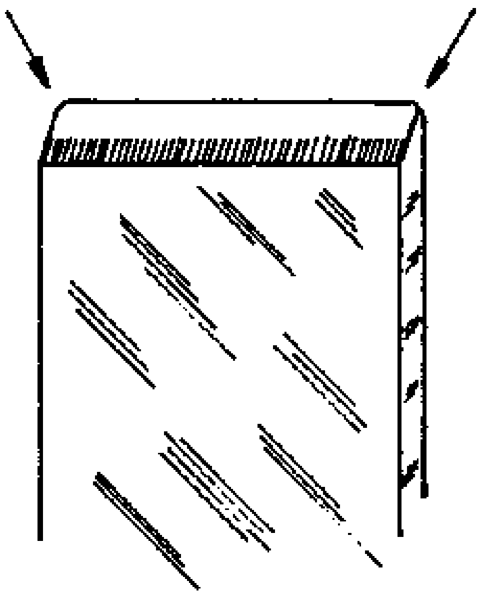

Fig. 3

SHARPENING PLANE IRONS AND CHISELS

Two different operations may be needed to produce a keen edge on these tools: grinding and honing.

Simply honing tools on a sharpening stone is all that is needed to sharpen them if they are dull but undamaged.

If the edges have been damaged, or worn down by many honings, they will need to be ground first and then honed. The grinding step is done on the rough side of the sharpening stone, or if the damage is very bad, on the grinding wheel.

ANGLE AND SHAPE OF THE CUTTING EDGE

- For normal work, grind plane irons and chisels so that the length of the bevel is a little more than twice the thickness of the blade (Fig. 1). This gives an angle of 25 to 30 degrees.

- The bevel should be ground straight or slightly concave, not rounded or convex (Fig. 2).

- For jack planes it is desirable to grind the corners of the blade slightly rounded as shown in Fig. 3. This lets the iron cut thicker shavings without causing deep grooves or plane marks in the wood surface.

- The cutting irons of smoothing planes, rebate planes and chisels should not be rounded.

- When you sharpen the cutting iron of a plane, always remove the cap iron first.

NOTES:

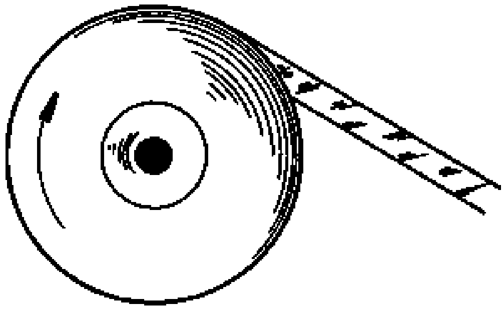

Fig. 1

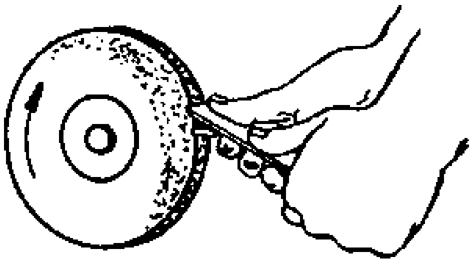

Fig. 2

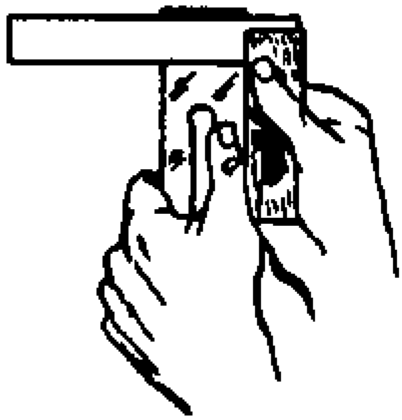

Fig. 3

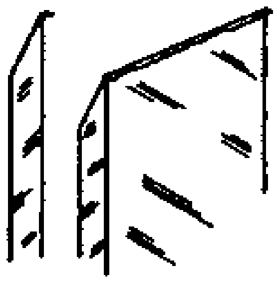

Fig. 4

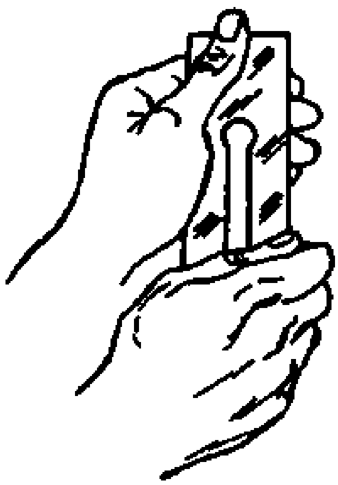

Fig. 5

HOW TO GRIND PLANE IRONS AND CHISELS ON THE GRINDING WHEEL

When the cutting edge of a tool is badly damaged, it is ground on the grinding wheel. This is done by holding the tool at a constant angle to the rotating edge of the wheel (Figs. 1 & 2).

Each grinding makes the tool a bit shorter, and thus shortens its life. Use your tools carefully so that they don't need to be reground as often.

When you grind a plane iron or chisel on the grinding wheel, the following points are important to keep in mind:

- Before grinding, test the cutting edge for squareness. Put a try square on top of the chisel or plane iron, with the cutting edge projecting slightly past the try square blade (Fig. 3). Be careful not to touch the cutting edge with the square.

- Hold the tool against the wheel in a manner that will produce a smooth, even bevel, with the desired angle.

- If possible, adjust the work rest of the grinding wheel, so that when the tool is held firmly against the rest it will come into contact with the wheel at the correct angle (Fig. 2).

- Grasp the tool so that your first finger is against the work rest; this will enable you to replace the tool in the proper position after removing it for inspection or to dip it in water (Fig. 5).

- During grinding, a wire edge or burr is formed on the tool. You can feel this burr if you run your thumb across the edge at the back (Fig. 4).

- It is important that the grinding wheel always turns towards you (Fig. 1), so that the burr that is formed remains on the blade. If the wheel were rotating away from you the burr would tear off, leaving an uneven edge.

- Turn at a moderately fast speed, not so fast that the gears whine or the grinder vibrates.

- Always work with another person on the grinding wheel, so that he can turn the wheel while you do the grinding.

- Hold the tool against the wheel with a medium firm pressure.

- Move the tool from side to side across the face of the wheel.

- Take care that the cutting edge does not become overheated and thus softened during grinding. Prevent overheating by frequently dipping the cutting edge into a tin of water.

- Inspect the edge often, to see if the tool is being ground to the proper shape and angle.

- With a bit of practice, you can check the cutting angle by eye, remembering that the length of the bevel should be a little more than twice the thickness of the blade. Use a rule at first to check the length of the bevel and the thickness of the blade.

- Continue grinding until the dull edge is removed, all the marks are removed, the edge is straight and square and the bevel has the required angle. If the edge is not square, correct it during the grinding by pressing carefully more on one side than on the other.

- Remove the burr or wire edge left by the grinding wheel by honing the tool on a sharpening stone.

NOTES:

GRINDING ON THE COARSE SIDE OF THE SHARPENING STONE

If the tool has a cutting edge with only a few marks in it and no serious damage, it can be ground on the coarse side of the sharpening stone, instead of using the grinding wheel.

- Soak the stone in water and grind the bevel of the tool on the coarse side of the stone, until a slight burr or wire edge is formed.

- When grinding, place the cutting iron on the stone so that the bevel lies flat (Fig. 1) and rub it with circular movements. Do not rub it just back and forth, as this makes the stone wear unevenly.

- Be particularly careful to move your hands parallel to the surface of the stone and do not allow them to make a dipping movement, as this will round the cutting edge.

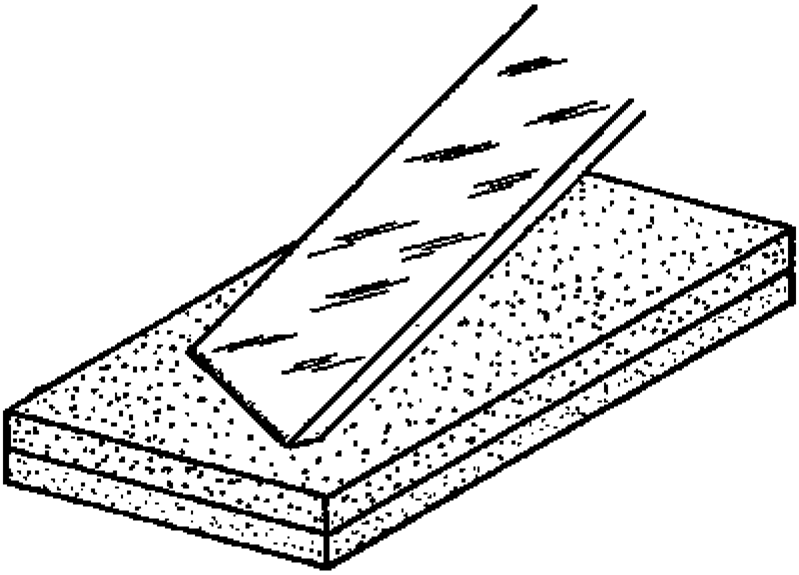

Fig. 1

NOTES:

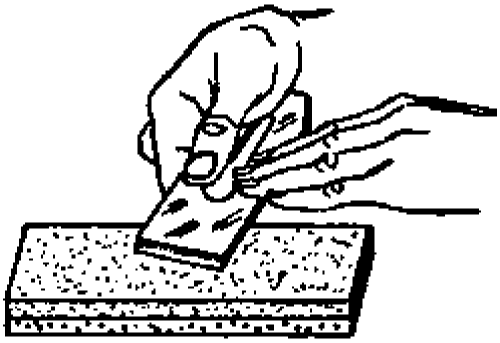

Fig. 1

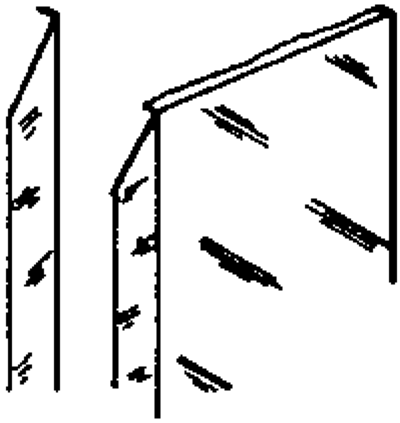

Fig. 2

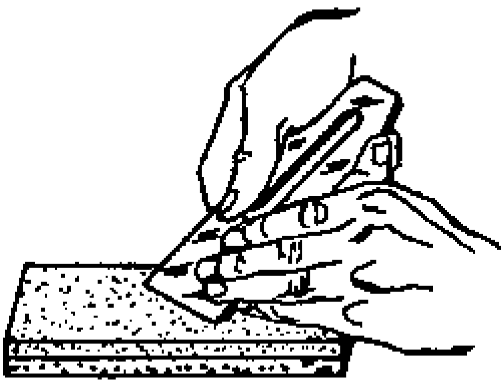

Fig. 3

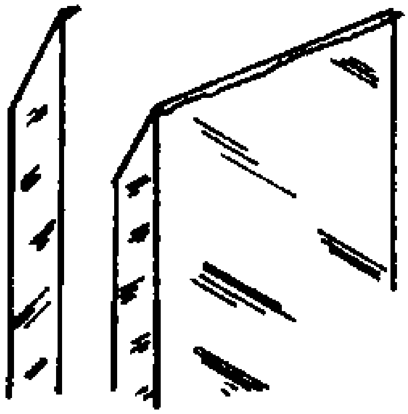

Fig. 4

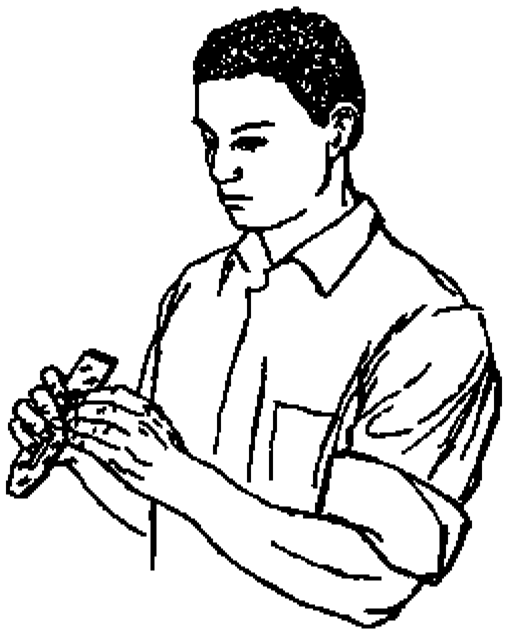

Fig. 5

HOW TO HONE PLANE IRONS AND CHISELS

Honing is done on the fine side of the sharpening stone. Honing produces a keen edge.

After a slight wire edge has been produced on the coarse side of the sharpening stone, or on the grinding wheel, it is removed by honing on the fine side of the stone.

- First, soak the stone in water. Place the tool perfectly flat on the stone with the bevel up and push it forward (Fig. 1). A few strokes will turn the burr from the flat side of the tool to the side with the bevel (Fig. 2).

- When the wire edge turns, turn the tool over so the bevel is flat on the stone and hone lightly on the bevel (Fig. 3).

- Then reverse the tool again and hone on the flat side.

If the honing is properly done, the wire edge will quickly become smaller and smaller (Fig. 4) and eventually disappear. The tool will then be sharp.

To check whether the tool is sharp, draw the nail of your thumb across the edge of the tool.

Marks, such as may have been caused by a nail, can be detected by holding the iron to the light. A sharp edge cannot be seen, while a dull one will show up in the light and appears as a narrow, shiny surface (Fig. 5).

If the tool is not held perfectly flat when the flat side is honed, a small bevel may be produced on the flat side and it will then be impossible to put the edge in good condition without regrinding it.

- In alternately honing the flat and bevelled sides, make sure that the wire edge is actually turned from the flat to the bevelled side before you reverse the tool for honing on the bevelled side (Figs. 2 & 4).

- To hone a slightly dull edge without grinding it, rub it on the sharpening stone in the same way, but only on the bevel side, not on the flat side.

Chisels are sharpened in the same way as cutting irons. Keep in mind that they are narrow and they should not be worked all the time in the centre of the stone, as this will quickly cause the centre of the stone to become hollow.

NOTES:

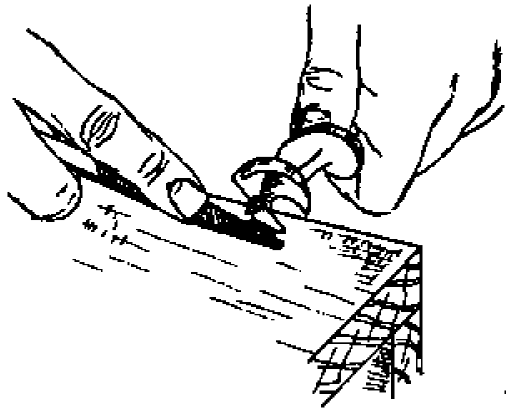

Fig. 1

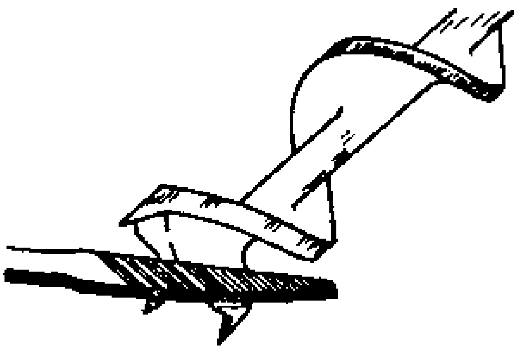

Fig. 2

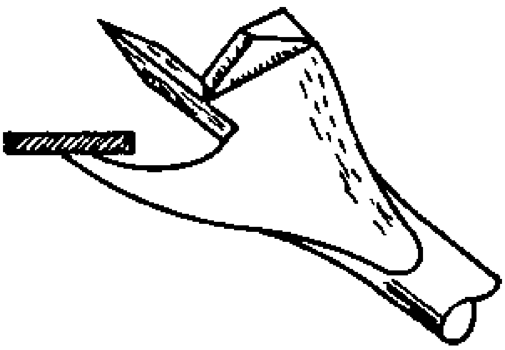

Fig. 3

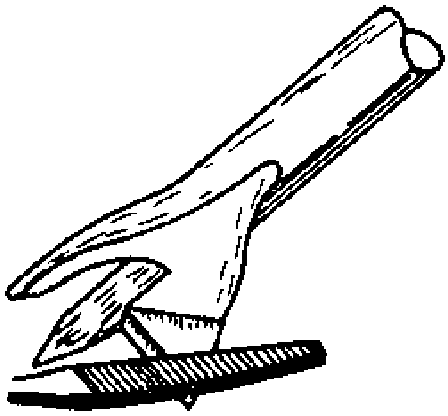

Fig. 4

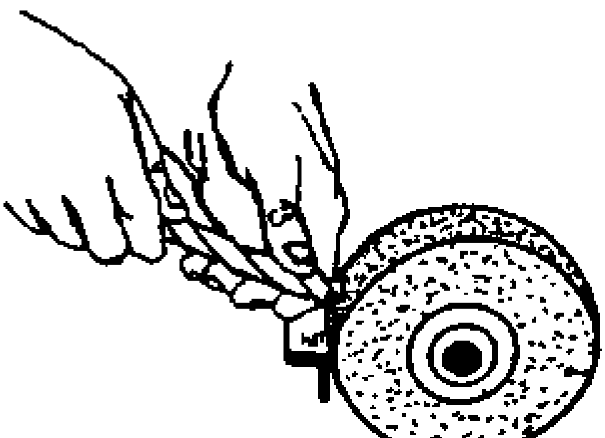

Fig. 5

SHARPENING BITS AND DRILLS

Manual wood bits are usually sharpened with a small file. It is best to avoid too much sharpening. Your tools will last longer if you use them carefully and keep them in a good case, so they won't need sharpening so often.

SHARPENING THE AUGER BIT

Auger bits are sharpened as shown on the left (Figs. 1 & 2).

- For the spurs, use a small file and sharpen from the inside face only (Fig. 1). The spurs are never sharpened on the outer faces, as this would change their diameter.

- For the cutters, file from the top side (Fig. 2). Retain the original bevel and remove about the same amount of material from each side.

- Hold the bit firmly to the edge of the bench during filing.

HOW TO SHARPEN THE CENTRE BIT

- To sharpen the spur, file from the inside (Fig. 3). To sharpen the router, file the bevel from the top side (Fig. 4).

- When sharpening the centre point, take care that the point remains exactly in the middle between the spur and the outside of the router.

HOW TO SHARPEN THE TWIST DRILL

- Grind the nose from the bottom (Fig. 5). Keep the original shape and angles and remove the same amount from each side.

- Never file the flutes as this would change the diameter of the drill. If the drill is really out of shape, contact someone with metalworking experience.

HOW TO SHARPEN AWLS

- To sharpen an awl you can use the sharpening stone, or if it is damaged rub it down with a file. Pointed awls can be sharpened on a grinding wheel.

NOTES:

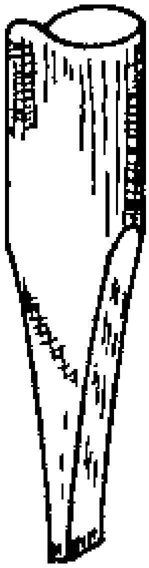

Fig. 1

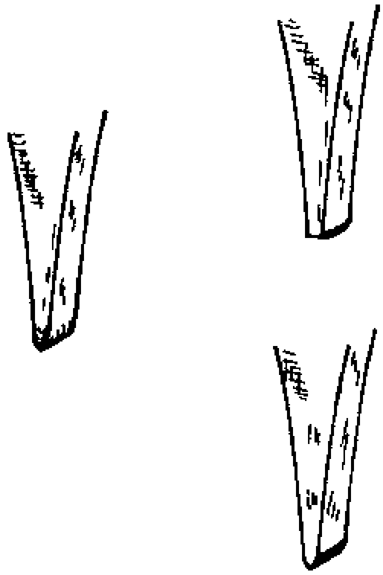

Fig. 2

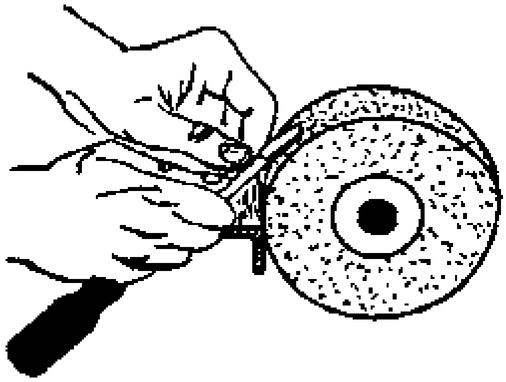

Fig. 3

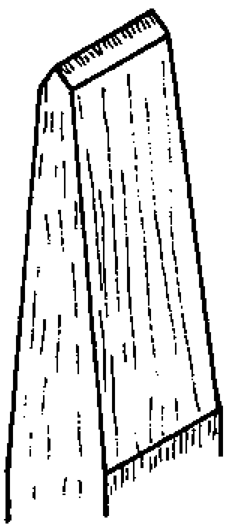

Fig. 4

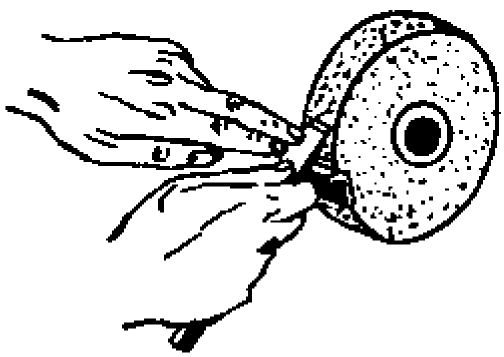

Fig. 5

SHAPING SCREWDRIVERS

A screwdriver should be ground or filed to a very blunt end (Fig. 3). The two flat surfaces should be straight and parallel near the tip. The end should be square to the flat sides, and should be "a little less thick than the width of a screw slot (Fig. 1).

If the end is rounded or sharpened to a knife edge, it will easily slip out of the screw slot and damage the slot (see Screwdrivers, page 77). In Fig. 2 there are some examples of badly shaped screwdriver tips.

SHAPING COLD CHISELS

Cold chisels should be ground or filed with the bevels on the cutting edge making an angle of about 70 degrees to each other (Figs. 4 & 5).

SHAPING BLOCK SCUTCHES

A block scutch should be shaped and filed to an angle of 70 degrees. Unlike the cold chisel, it is filed only from the inside (Fig. 6).

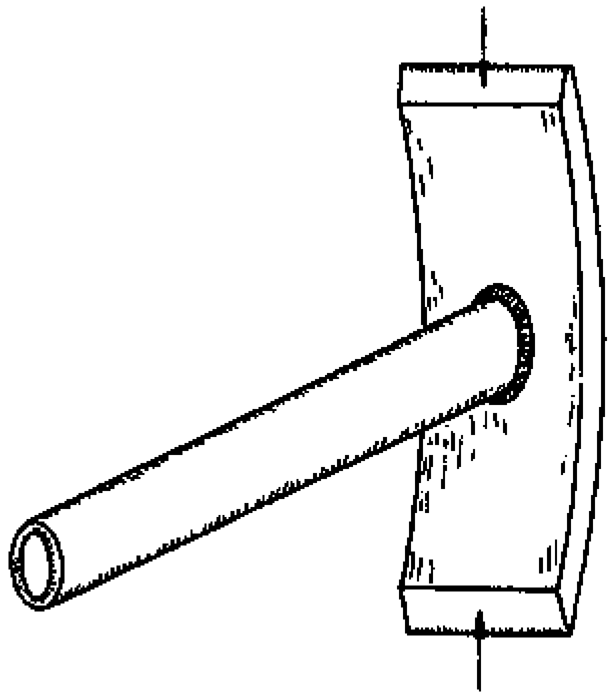

Fig. 6

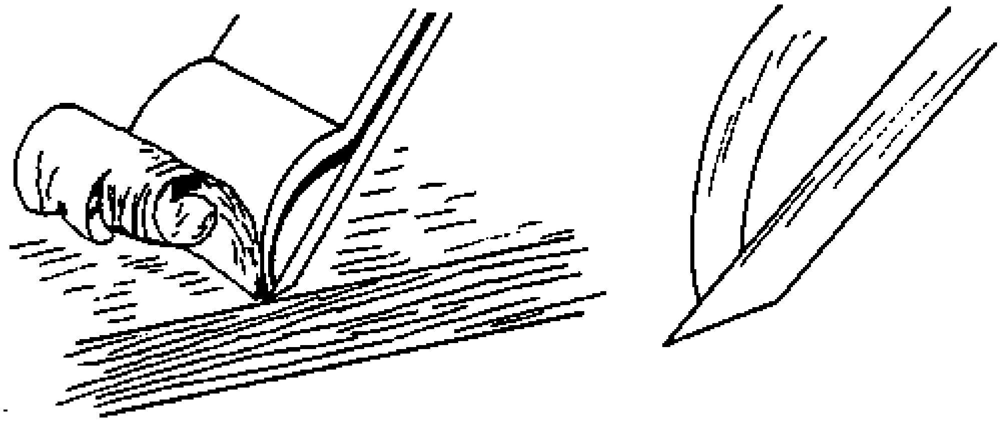

Fig. 1

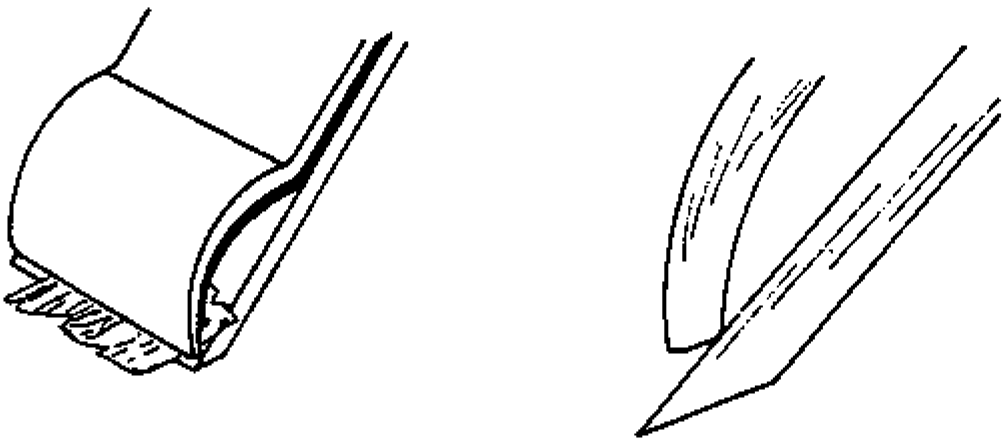

Fig. 2

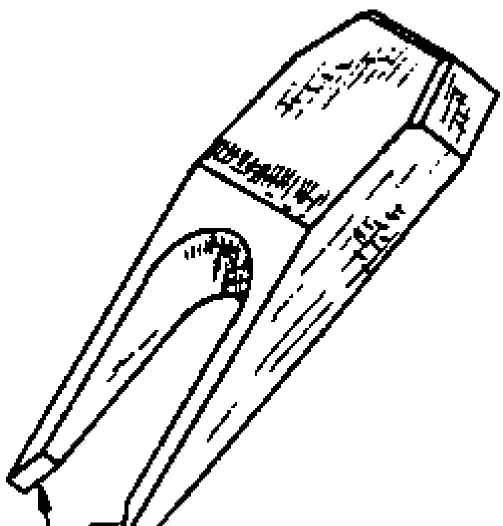

Fig. 3

MAINTAINING WOODEN PLANES

HOW TO REFACE THE SOLE

Whatever the quality of the wood stock, the soles of all wooden planes eventually wear and require refacing.

Refacing can be done on a large sheet of sandpaper, which is fastened to a true flat surface. The cutting iron of the worn plane is pulled inside the mouth, not removed, for it is best to have the stock held in the usual pressure by the wedge.

- Sand the surface down, test it with a straight edge and winding strips and oil the wood lightly.

ABOUT THE BEDDING OF THE CAP IRON

It is essential that the edge of the cap iron should bed perfectly on the face of the cutting iron when they are screwed together (Fig. 1). Even the slightest gap between the two will allow a shaving to enter and block the mouth of the plane (Fig. 2).

Usually this problem is caused by a fault in the cap iron. The cap iron should be rubbed on a sharpening stone or filed to restore the true edge. Keep the cap iron clean and shiny.

FITTING THE WEDGE

After much use, the wedge may no longer fit well into the stock. Heavy use of the hammer when knocking it in may cause the wedge to become misshapen because of the pressure.

When it becomes difficult to remove the wedge in the usual way (by hitting sharply on the striking button), the wedge should be removed, cleaned and filed or sandpapered to the correct fit again.

The ends of the wedge can become worn and cause the plane to stuff because they are too far inside the plane. If this happens, recut the ends of the wedge (Fig. 3).

NOTES:

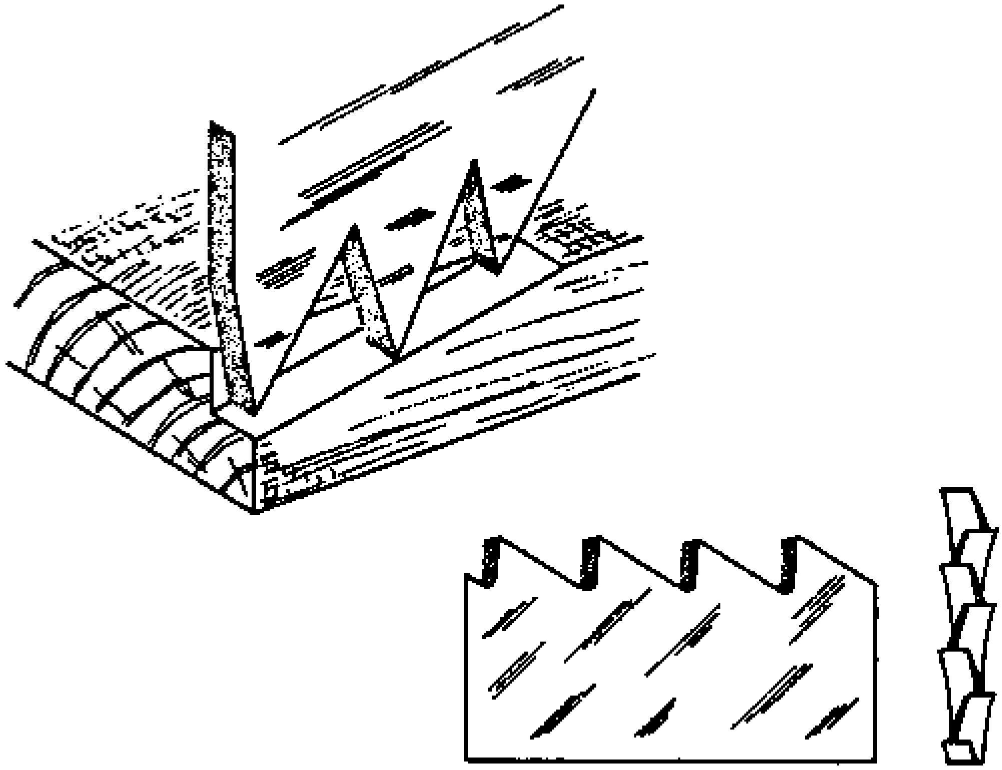

Fig. 1

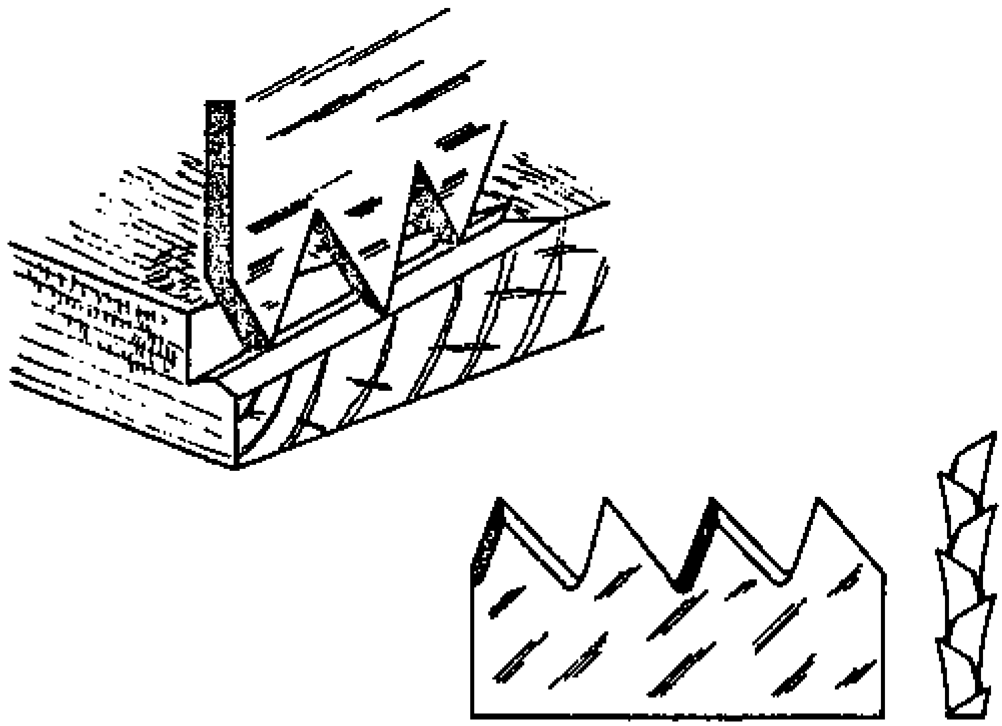

Fig. 2

MAINTENANCE OF SAWS

GENERAL MAINTENANCE

- Frequently give the saw a light coat of oil on the blade, to prevent rust. Keep the saw away from water.

- Keep the saw in the toolbox and be careful not to damage the blade by putting other tools on top of it.

- Keep the workbench uncluttered and be careful where you put the saw down.

- If the blade gets bent or buckled, straighten it at once.

THE ACTION OF THE TEETH

In order to properly maintain saws, it is necessary to understand how the teeth should look and how they work.

The ripsaw tooth resembles the cutting edge of the chisel. Its cutting edge strikes at practically a right angle to the wood fibres and the effect is as if a series of small chisels were set one behind another. Each tooth cuts out the full width of its edge and carries away the shaving (Fig. 1).

The teeth of the crosscut saw and the backsaw have a different shape, size and action from those of the ripsaw.

The form of the teeth is more like a series of knives that cut alternately on the two sides of the kerf (Fig. 2).

In sawing across the grain of the wood, the wood fibres must be cut on each side of the kerf so that a clean cut can be made. The teeth are therefore formed into sharp points on the outer side, so that they cut the fibres accurately.

The cut is started as the teeth make fine cuts, similar to the cuts of a knife, across the wood surface. Then as pressure is applied, the teeth go deeper and deeper, gradually bringing into action the full cutting edge of the teeth.

NOTES:

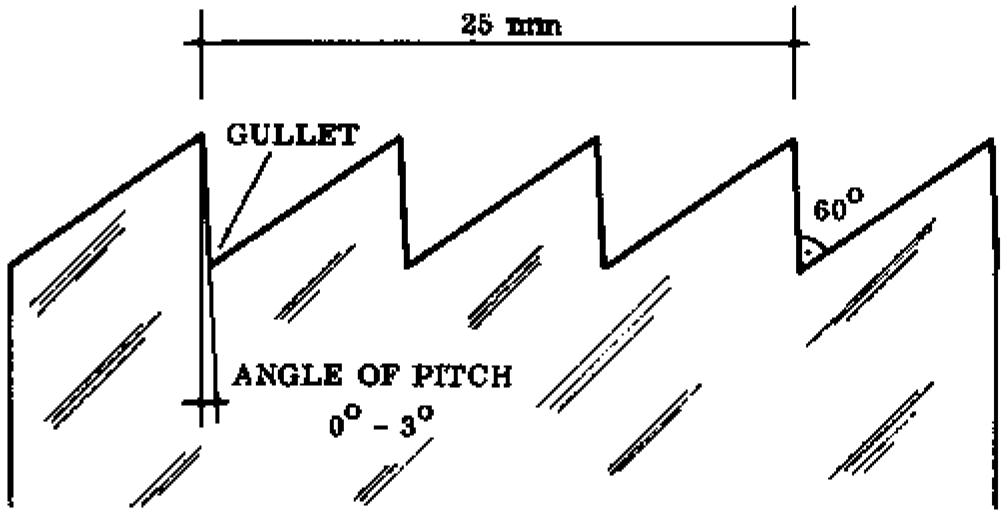

Fig. 1

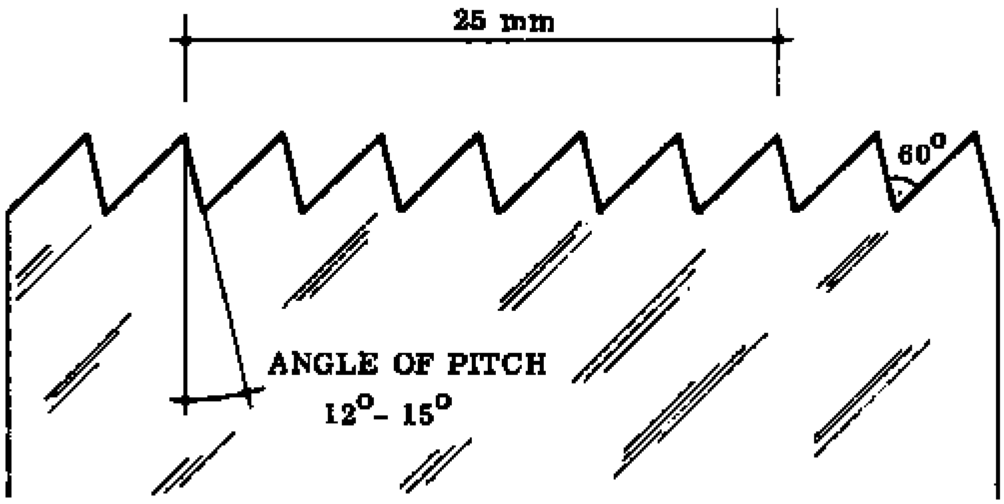

Fig. 2

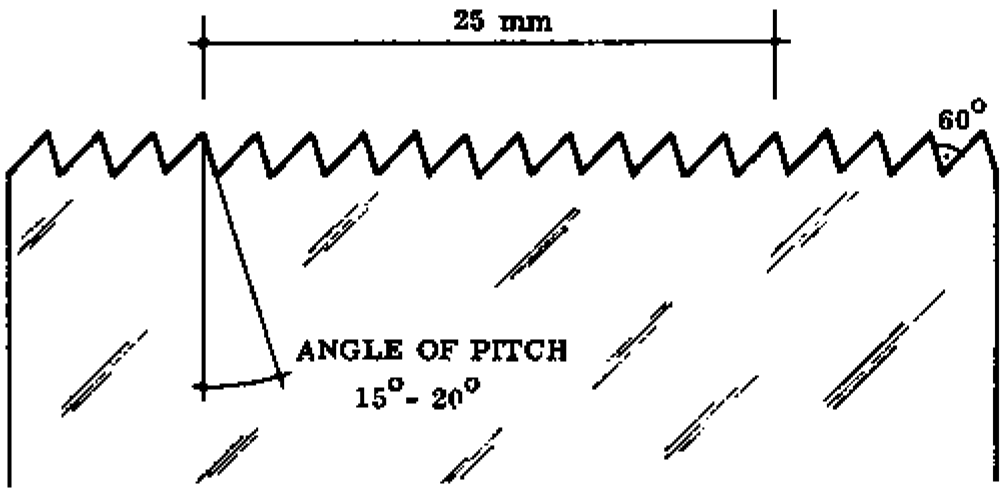

Fig. 3

ANGLE OF PITCH. SHAPE AND NUMBER OF SAW TEETH

The angle of pitch of the saw teeth is important in the maintenance of the saw. This angle is the measure of how far the face of the tooth is leaning from the vertical. The angle of pitch for the different saws is shown on the left page.

The smaller the angle of pitch, the faster the saw will cut and the more often it will need re sharpening. A large angle of pitch means a longer life for the blade, while a small angle means more frequent re sharpening and thus a shorter life.

THE RIPSAW

The blade of the ripsaw has 4 points (teeth) per 25 mm. The teeth of the ripsaw are rather big (Fig. 1).

The angle of pitch of these teeth is very small, from 0 to 3 degrees. This small angle means that the ripsaw will not cut properly across the grain, because the teeth will tend to tear the fibres. This saw is used only for cutting with the grain, where there is not any danger of tearing the fibres.

THE CROSSCUT SAW

The blade of this saw has 6 to 8 points per 25 mm, so' its teeth are smaller than those of the ripsaw. The angle of pitch of the teeth is greater in order to get cleaner cuts; this also makes the work slower. The angle is between 12 and 15 degrees for this kind of saw (Fig. 2).

Do not use this saw for cutting along the grain; it is not designed for that and it will not guide as well as the ripsaw.

THE BACKSAW

The blade of the backsaw has 10 to 15 points per 25 mm, so the teeth are still smaller than those of the crosscut saw. The angle of pitch is between 15 and 20 degrees (Fig. 3).

NOTES:

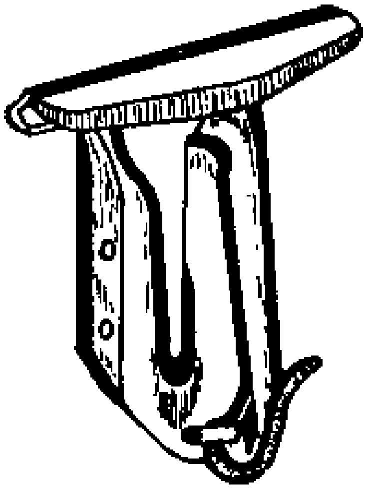

Fig. 1

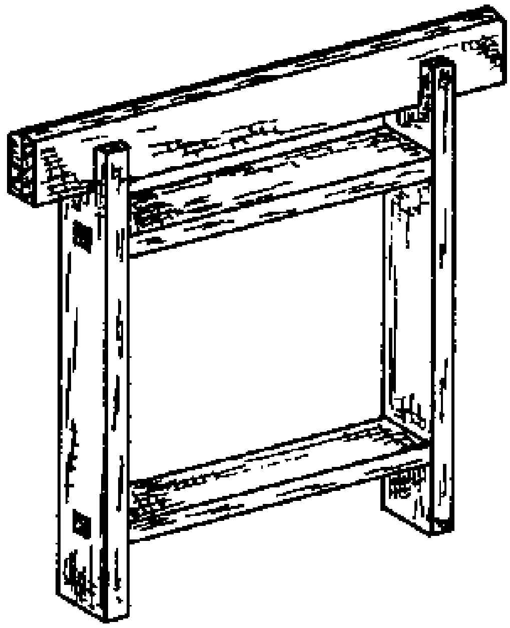

Fig. 2

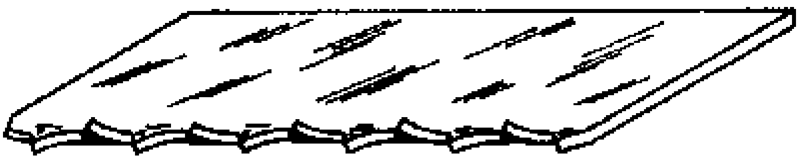

Fig. 3

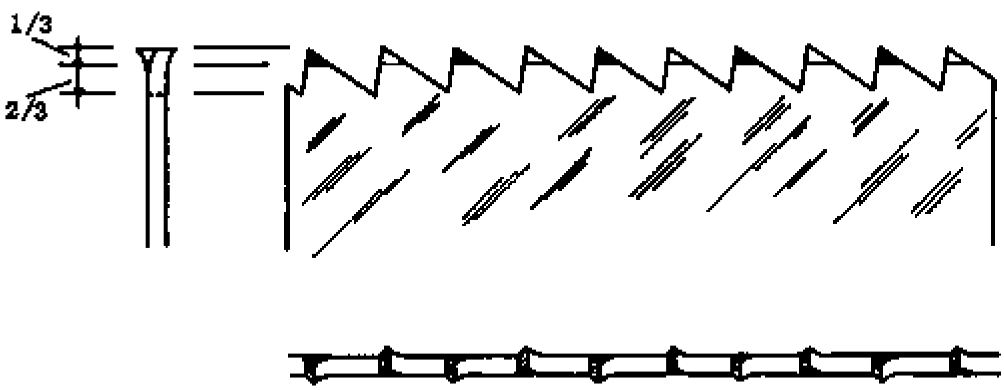

Fig. 4

SETTING HANDSAWS

There are two main operations involved in sharpening a handsaw:

a. Setting
b. Filing

In order to make sure that the saw blade moves freely in the saw cut without any side friction, the saw teeth must be set. This is done by slightly bending the teeth at their tips (Fig. 3) to give more clearance in the kerf (saw cut). A saw should never be given more set than is necessary for the blade to move easily in its kerf. Too much set will cause the blade to wander out of line, too little set can cause the saw blade to buckle.

Only the tips of the teeth are set, never more than about 1/3 rd of the length of the tooth (Fig. 4). If you set the saw deeper than that you will buckle or crack the blade.

A saw need not be set every time it is filed, particularly if only a light filing is required. A saw can sometimes be filed two or three times before it needs to be reset and filed again.

- SAW VICE: During the maintenance of a saw, it must be securely fixed in position. A saw vice is used to hold it; either the wooden type (Fig. 2) called a horse, or the metal type (Fig. 1) which grips the blade more strongly but does not grip the whole length of the blade.

Another type of wooden saw vice can be made by fixing the two wooden jaws to the handle of your toolbox.

NOTES:

Fig. 1

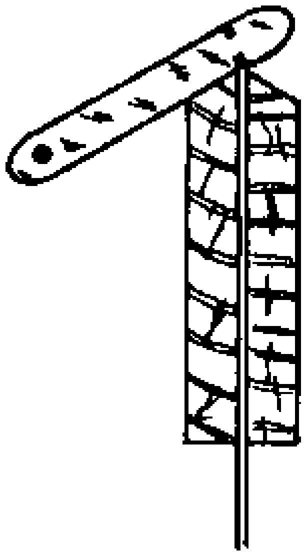

Fig. 2

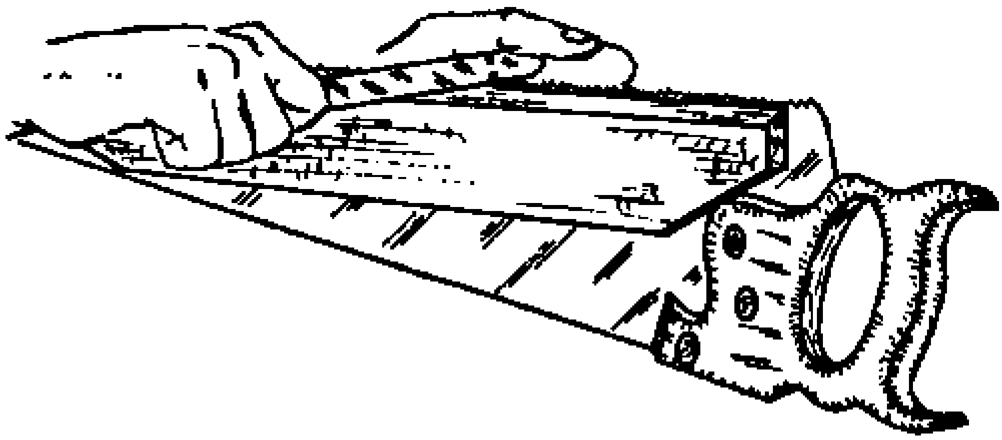

Fig. 3

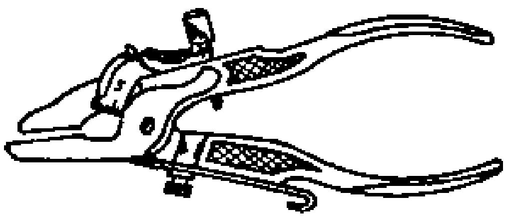

Fig. 4

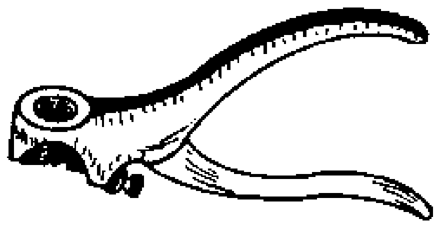

Fig. 5

HOW TO SET A SAW

To do the setting, we use a setting tool. This can be a strip of metal with some cuts in it, the cuts being the thickness of the different saw blades (Fig. 1). Setting has to be done by eye, and practice is needed to get the right bend. The top of the saw vice can be bevelled to act as a guide for the setting tool (Fig. 2).

- Hold the saw firmly in a good position. When setting the first tooth, take care that you bend it to the same side that it was bent before.

- Start at the heel of the blade and bend every second tooth. When you finish one side, turn the blade around and do the other teeth (Fig. 3).

- It is important that the set is exactly the same on each side, otherwise the saw will run (saw out of line).

Instead of the setting tool mentioned above, pincer type sawsets (Figs. 4 & 5) are often used. You simply place the set over the tooth and squeeze the handles. These sawsets are adjustable, so when you use an unfamiliar one, it is best to set a few teeth and examine them before you set the whole saw. If the teeth are set too much or not enough, you can then adjust the sawset accordingly.

SETTING THE RIPSAW

When the saw cuts with the grain, like the ripsaw, the fibres of the wood don't tend to move back into the cut, so the ripsaw doesn't need a big set to have enough clearance between the blade and the kerf.

SETTING CROSSCUT AND BACKSAWS

Crosscut fibres tend to move back into the kerf, so these saws need a bigger set to get enough clearance.

It is important to note that the wider setting of these saws makes them unsuitable for cutting with the grain, because the kerf will be too wide to guide the saw.

NOTES:

Fig. 1

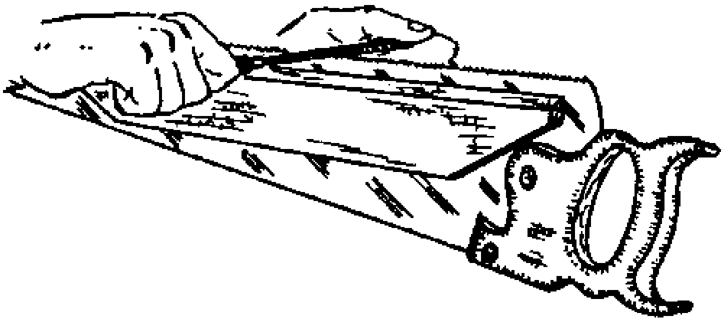

Fig. 2

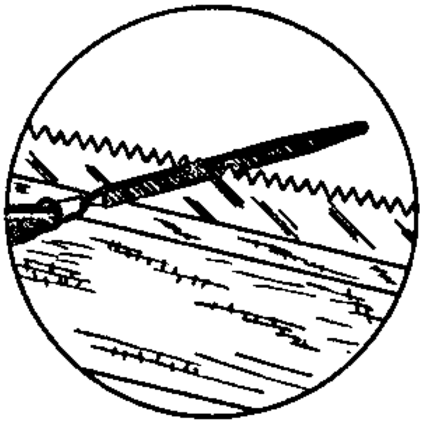

Fig. 3

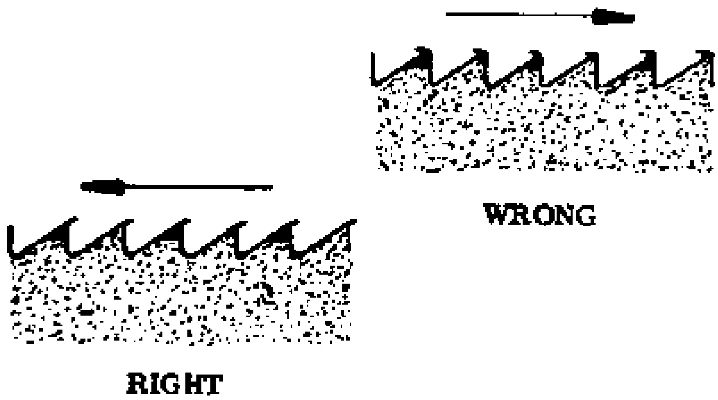

Fig. 4

FILING HANDSAWS

After the saw has been set it can be filed.

Secure the saw in a saw vice, with the teeth sticking out just a little way from the vice jaws. If the teeth stick out too far, the filing will cause a screeching sound.

The top of the saw vice should be at about the level of your armpits, or slightly below (Fig. 1). While filing, you must be able to constantly check the shape of the teeth and this rather high position enables you to see them properly.

In order to avoid eyestrain and ensure a good job of filing, it is essential to have good light. Work in front of an open window if possible, so that the light shines on the saw teeth.

USING THE SAWFILE

Small metalworking files with a triangular cross section are used for filing saws. The following points are important to remember in using the saw file:

- Hold the file handle in your right hand (Fig. 2).
- Hold the tip of the file gently between your thumb and forefinger of the left hand (Fig. 2).
- Exert pressure on the forward stroke only.
- Make long slow cutting strokes, not short fast ones.
- Keep the file level (Fig. 3).
- Use enough pressure to make the file cut, but no more.

During filing, a small burr is formed at the tip of the teeth. This burr can improve the cutting action of the saw when it is filed in the right direction. Therefore the saw must always be filed from toe to heel (Fig. 4).

NOTES:

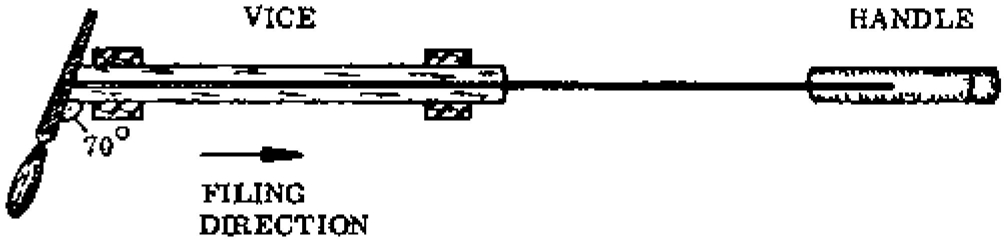

Fig. 1

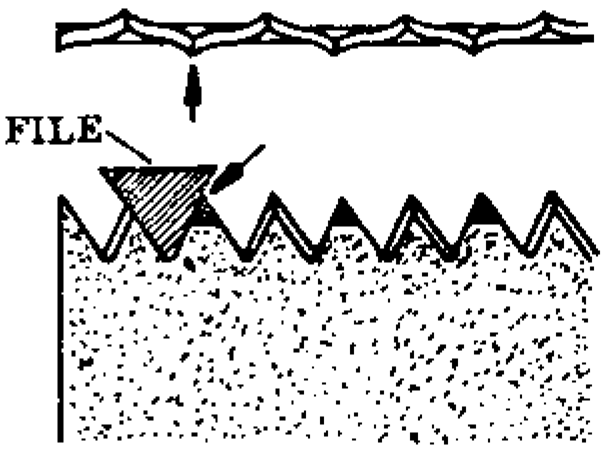

Fig. 2

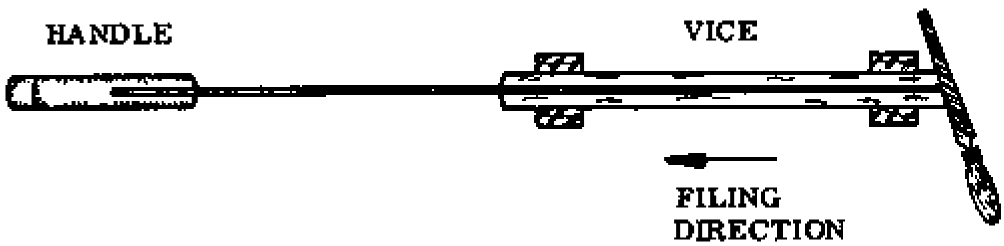

Fig. 3

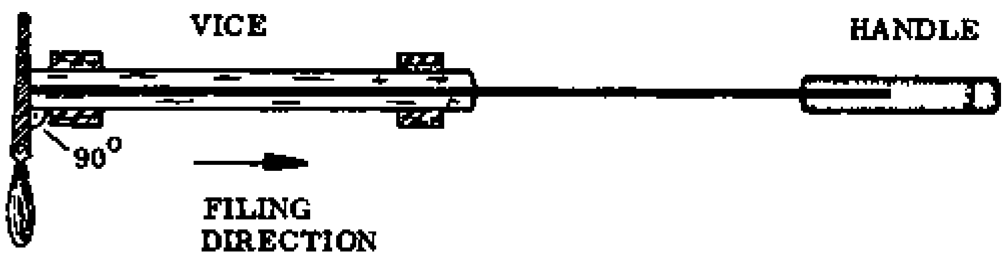

Fig. 4

HOW TO FILE THE CROSSCUT SAW

Study Fig. 1 very carefully to understand the proper starting position for filing this saw. Work according to the following sequence:

1. Place the toe of the saw in the saw vice with the handle to your right.

2. Find the first tooth in the toe that is bent towards you. Place the file in the first gullet (V-notch between the teeth) to the left of that tooth (Fig. 2, arrow).

3. Hold the file across the saw blade at an angle of about 70 degrees, with the point towards the saw handle.

4. If the teeth are of the proper shape (see section on Angles of Pitch) press the file gently into the gullet and let it find its own placement against the two teeth (Fig. 2). Remember to keep the file level.

5. Push the file forward, cutting the front surface of one tooth and the back surface of another.

6. Release the pressure on the file during the backstroke.

7. File every other gullet until you are about halfway through the saw, then make a pencil mark at this point.

8. Shift the blade in the vice until the head end is held more securely and continue filing every other gullet until you reach the handle.

9. When every other gullet has been filed from one side, turn the saw around in the saw vice so the handle is to the left (Fig. 3).

10. Find the first tooth in the toe of the saw that is bent towards you and put your file into the gullet to the right of that tooth.

11. Hold the file at an angle of about 70 degrees across the blade, with the point towards the saw handle.

12. File every other gullet as before, until you reach the saw handle.

- REMEMBER:

    - Inspect your work frequently to make sure that you are getting the teeth properly shaped. Remember that the angle of pitch must be correct.

    - Throughout the filing, give each tooth the same number of strokes with the file. This helps keep the teeth all the same size and shape.

    - If you get one tooth out of shape, don't be too concerned; it can be left as it is.

    - Turn the file occasionally, so that it is used evenly.

    - If you think you have lost your place or skipped a gullet, look for the last shiny tooth in the light.

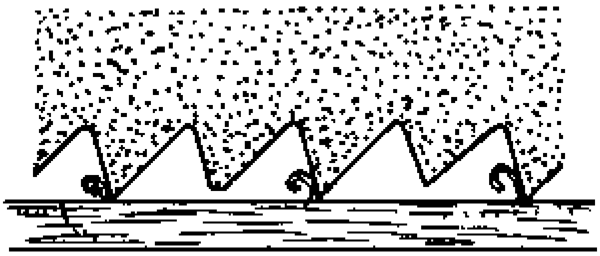

Fig. 1

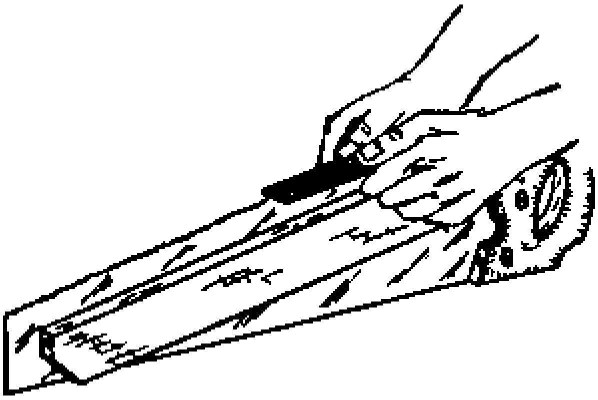

Fig. 2

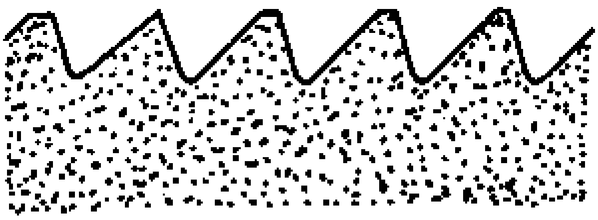

Fig. 3

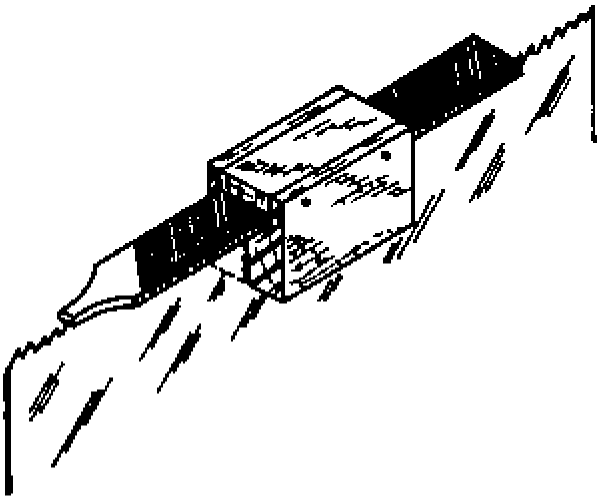

Fig. 4

HOW TO FILE THE BACKSAW

This saw is filed in the same way as the crosscut saw, except that the angle of pitch is different.

Be careful with the pressure you apply with the file, because the teeth are very small and are easily filed out of shape.

HOW TO FILE THE RIPSAW

The same general procedure is used for filing ripsaws as for crosscut saws. There are two important differences:

1. The angle of pitch is different.

2. The file is held at 90 degrees, not 70 degrees, to the blade (Fig. 4, previous page).

(Some people file the ripsaw from one direction only, filing all the teeth at once instead of filing every other tooth and reversing the saw).

TOPPING A HANDSAW

If you always file the saw correctly, without twisting the file or filing some teeth more than others, the teeth will always have the correct form and equal height.

When you make small mistakes in filing, or use the saw carelessly, the teeth will become out of line, different in height and irregular in shape. The result is that only some of the saw teeth can cut; the others don't touch the wood (Fig. 1). Topping is done to correct this problem.

WELL KEPT AND MAINTAINED SAWS NEVER NEED TOPPING!

HOW TO TOP A SAW

Topping must always be done before you set or file the saw.

- To top a saw, you run a flat metalworking file over the ends of the teeth, moving along the length of the saw. Be very careful to keep the file square to the saw blade and flat.

- One way to do this is to grasp the file in both hands by the edges, thumbs on top and the fingers under, touching the saw blade and guiding the file (Fig. 2, previous page).

- A wooden block may also be used to hold the file in the proper position (Fig. 4, previous page).

- File until there is a small shiny point on each tooth. When you have made two or three light strokes and there are still some teeth that have not been touched (Fig. 3, previous page), don't keep on filing. Too much topping will make it difficult to reshape the teeth.

- Next, file the teeth to the correct form again. This is called reshaping the teeth. When all the teeth have the same height and shape they are ready to be set and filed again after setting, to sharpen them.

NOTES:

PART 3: RURAL BUILDING MATERIALS

Man learned early to protect himself from the weather as well as from his enemies by making shelters of various kinds.

The type of structure he made depended on the locally available building materials, and on whether the shelter was meant to be permanent or not. Compare the sketches below, for example.

The extreme northwest of Ghana provides the inhabitants with such universally used building materials as sand, mud, stone, laterite, timber, grass and straw. However, the traditional way of building with these materials does not always produce a very permanent structure; with the result that almost every dry season the houses must be thoroughly maintained, repaired and even rebuilt. In order to make more durable structures, the Rural Builder should include in his technical knowledge the uses of local and modern materials, and of binding materials such as lime or cement. Building materials are described in the following chapters.

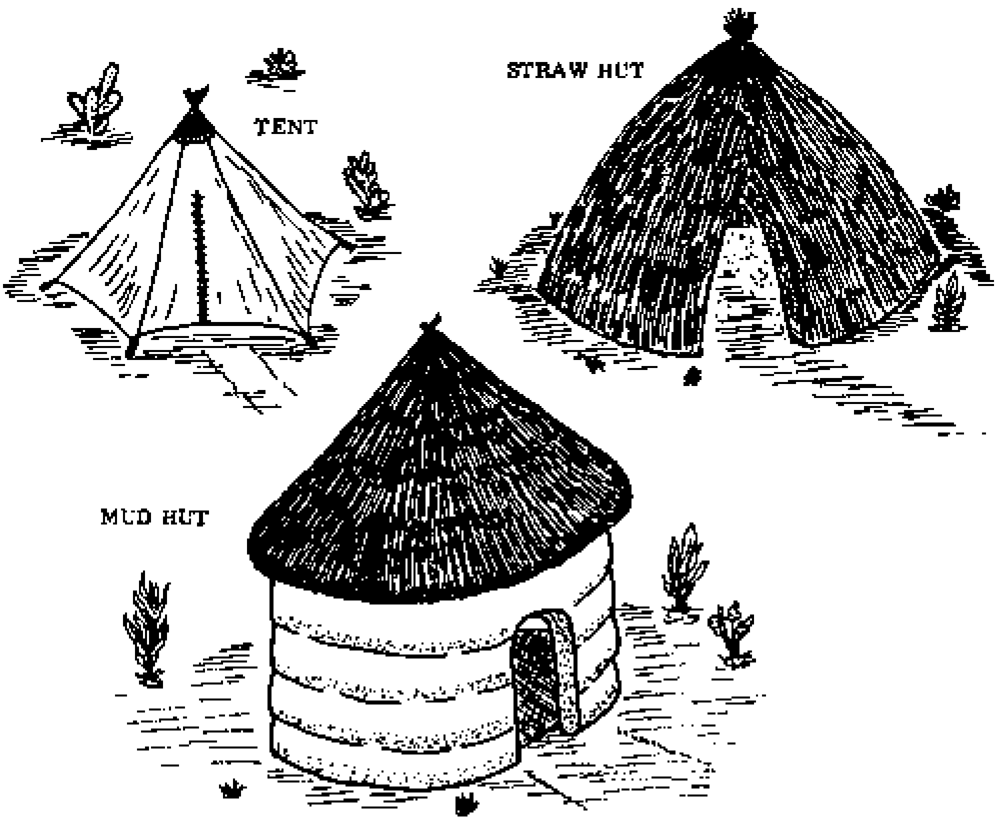

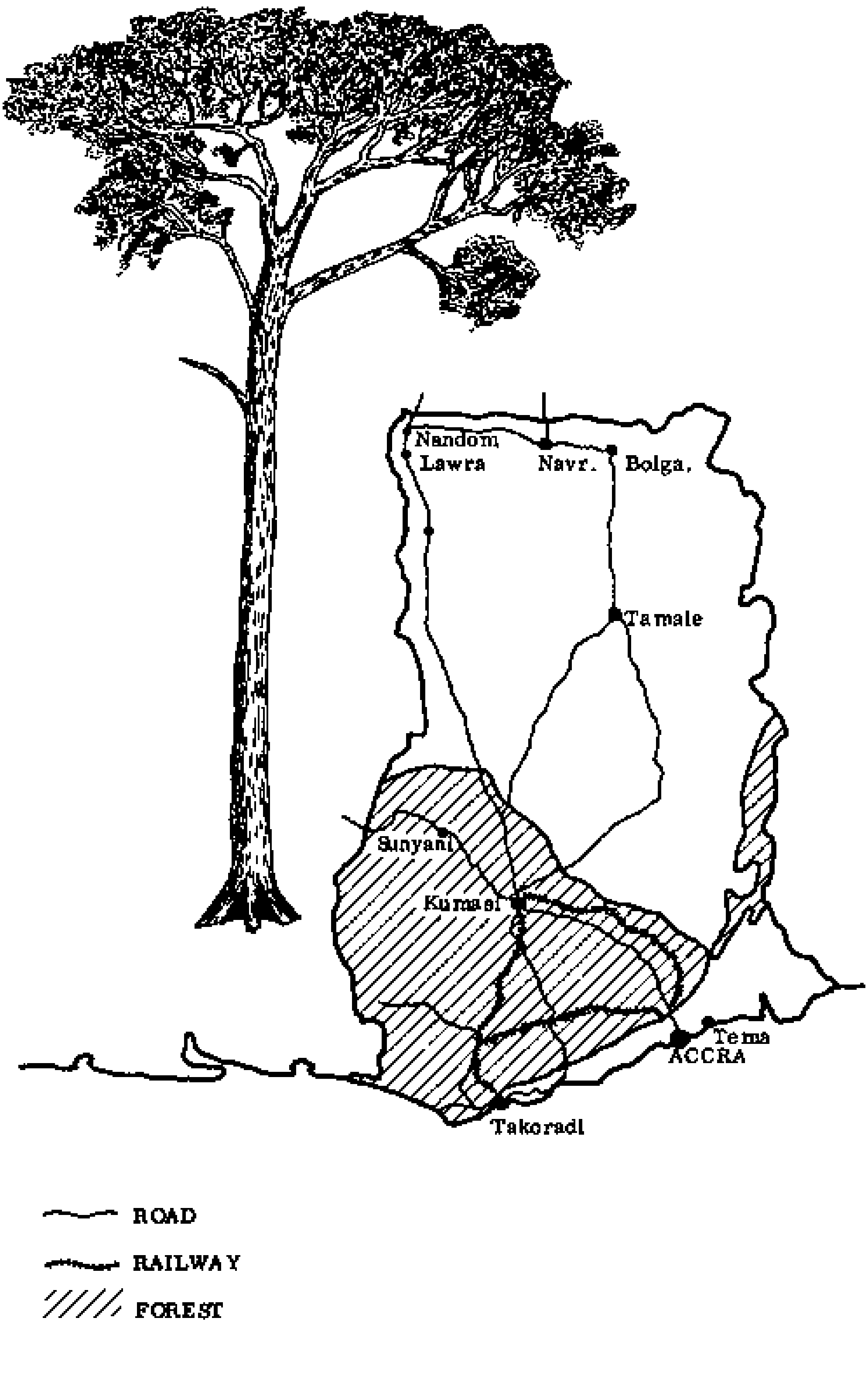
Nandom
Lawra
Navr.
Bolga.
Tamale
Sunyani
Kumasi
Tema
ACCRA
Takoradi
ROAD
RAILWAY
FOREST

ABOUT WOOD IN GENERAL

In Rural Building we work a great deal with wood. Wood has always served man for many different purposes: for tools (handles of hoes, knives and axes), for weapons (bows and arrows), for housing (ladders, doors and windows), furniture and firewood.

For traditional building purposes, nearby trees and bushes are cut and the branches as well as the trunks are used.

In Rural Building, we work with sawn timber. Sawn timber is cut from the trunks of very tall trees. Such trees are not common in the northern parts of Ghana. They are found in the rainforest areas of the south, where they are felled (cut down), sawn into boards and transported to the north and elsewhere.

The most common woods we use in northern Ghana are Wawa and Odum. Others, like Emire or Mahogany, are sometimes used.

There are 85. 000 square kilometres of forest in Ghana, from which comes more than 200 different species of wood. Most of the wood that is cut is not used in Ghana but is sold to other countries to bring in money. It is one of the largest sources of income for Ghana. The principal kinds of wood that Ghana exports are Afromosia, Wawa, Utile, Sapele, Odum and Mahogany.

To make sure that these woods are available in the future, the cutting is controlled by Forestry Acts and efforts are made to reforest the cut areas. These new trees will not be ready to cut for a long time.

The map on the left page shows the areas where the trees are cut, the locations of the roads and railways that bring the wood into the harbours at Takoradi and Tema and the roads by which wood is exported to neighbouring countries. It is transported either as whole logs or as sawn timber and also as timber products made from waste wood or wood chips, like chip board or plywood. The mills that convert logs to sawn timber and timber products are located all over the forest.

THE STRUCTURE AND GROWTH OF THE TREE

A tree has three main sections: the Toots, the trunk and the crown. The crown is made up of the branches, twigs and leaves (Fig. 1, next page).

In order to grow, the tree must have water and minerals from the soil. The water and minerals are taken out of the soil by the roots and brought to the leaves through the outer layers of the sapwood (Fig. 2).

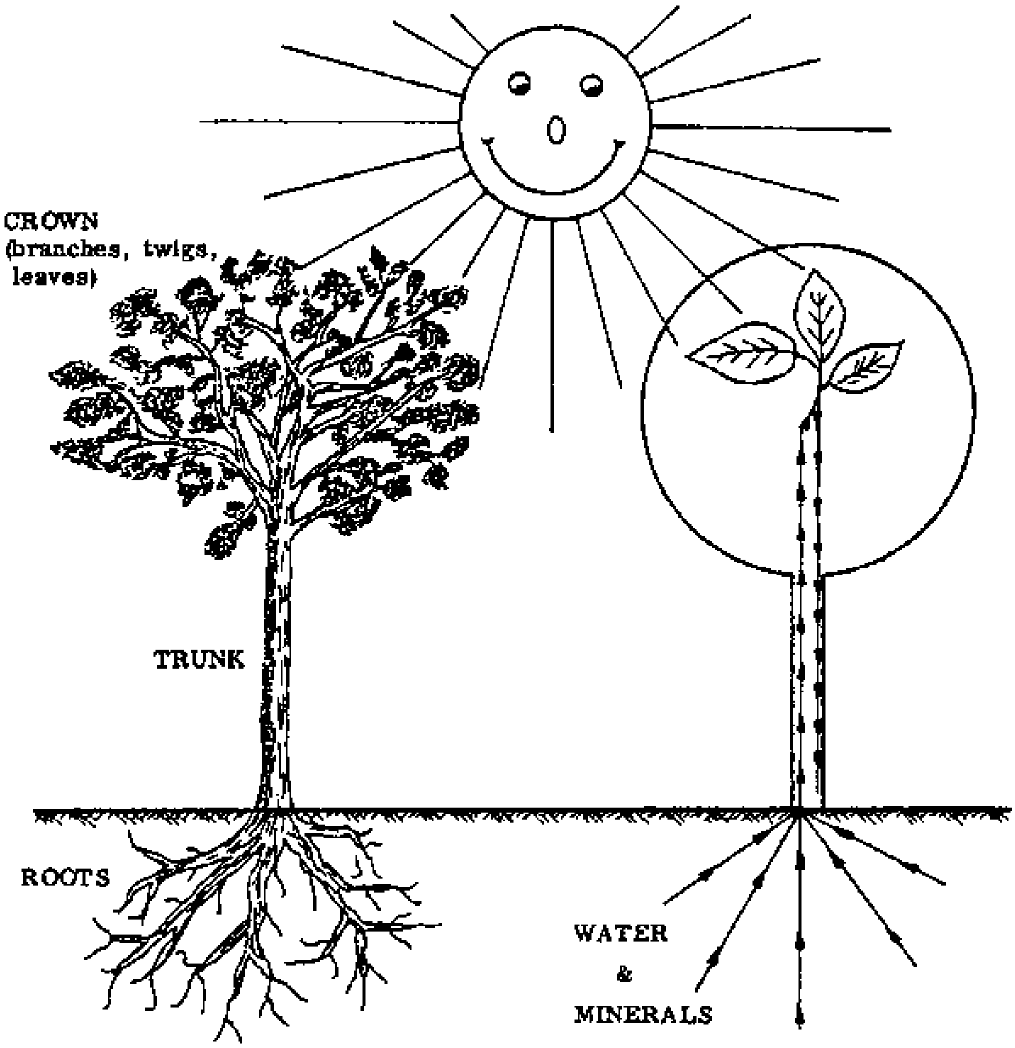

Fig. 1

Fig. 2

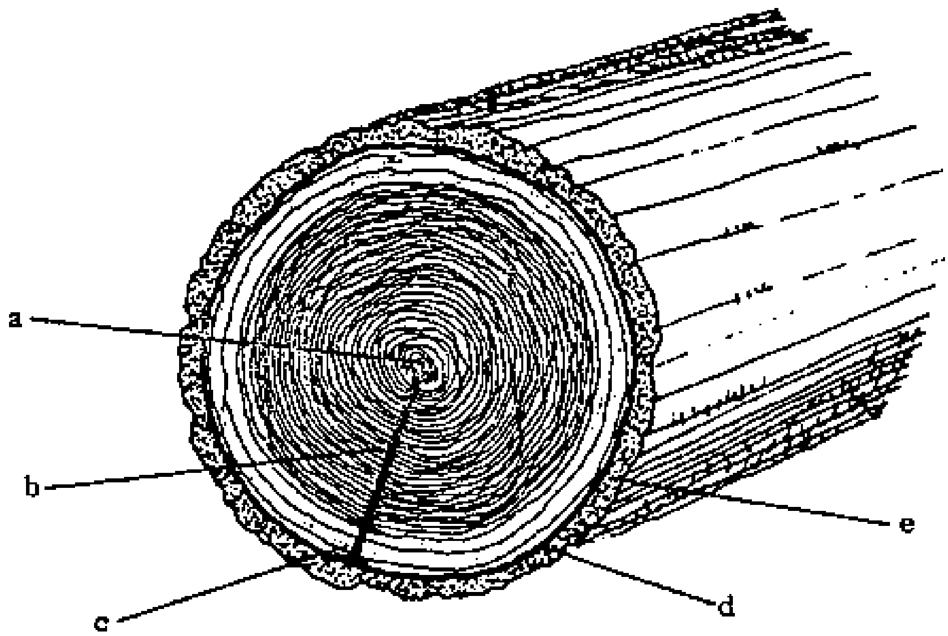

Fig. 3

In the leaves, the sunlight acts on the water, minerals and air to make the materials that the tree uses to build new roots, wood and leaves.

The material made by the leaves is brought down to the roots and growing parts of the tree by the inner layers of the bark. If the bark is damaged by cutting or bush fire, the sap can't move up and down and the tree might die.

HARD AND SOFT WOOD

We talk about two main categories of wood: hardwoods and softwoods. These categories are only trade terms, they do not indicate that the wood itself is either hard or soft. The difference comes from the way of growth of the tree. Almost all the trees that grow in Ghana are hardwoods, but the actual wood itself may be hard or soft in character. For example Wawa, which is classed as a hardwood, is actually very soft in character and easily worked.

THE STRUCTURE OF WOOD

The tree trunk is made up of five layers (Fig. 3).

The pith (a) is the centre or heart of the tree.

The heartwood (b) is the fully developed mature wood which surrounds the pith. It is usually dark in colour and hard. The heartwood does not play an active part in the growth of the tree; it is only for strength, to support the tree.

The sapwood (c) is the layer around the heartwood which is lighter in colour and softer. Sapwood is immature wood, it will harden and darken and become heartwood as the tree grows. A new ring of sapwood is added every year on the outside of the older wood.

Sapwood should not be used for construction purposes, because it is soft and easily attacked by termites. It is always removed when wood is cut for construction purposes.

The cambium (d) is a soft, greenish layer between the sapwood and the bark. It is the "factory" of the tree, making new wood at the inside and new bark at the outer side. The cambium is fed by materials brought from the leaves by the inner layers of the bark.

The bark (e) protects the cambium from cold, fires, insects and animals, and it also transports food material from the leaves to the cambium and to the roots.

The annual rings are the rings you see (Fig. 3) in the heartwood and sapwood.

These are formed by the growth of the tree, by the layer of new wood that is added each year.

The tree grows all year long but in the rainy season, when it gets more water, it grows faster than in the dry season. The new wood formed in the rainy season is lighter in colour than the wood formed in the dry season, so they appear as light and dark rings in the wood. One light ring and one dark ring are formed each year; together they make an annual ring (annual means every year).

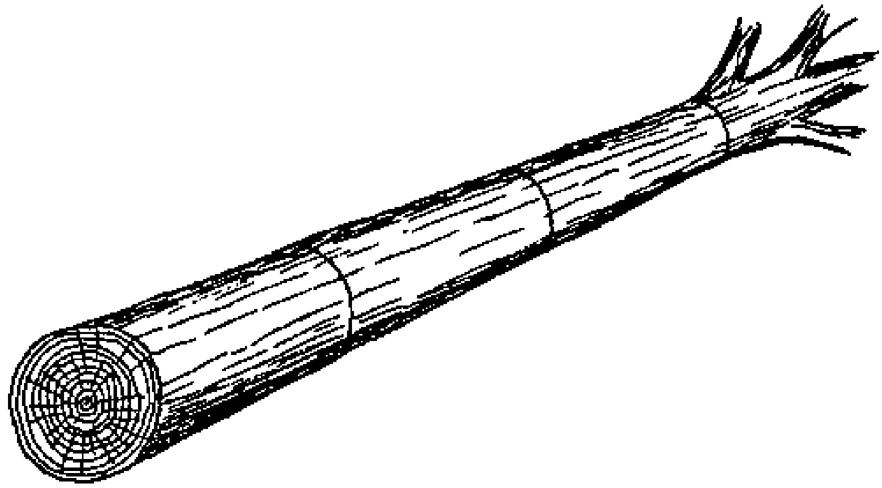

Fig. 1

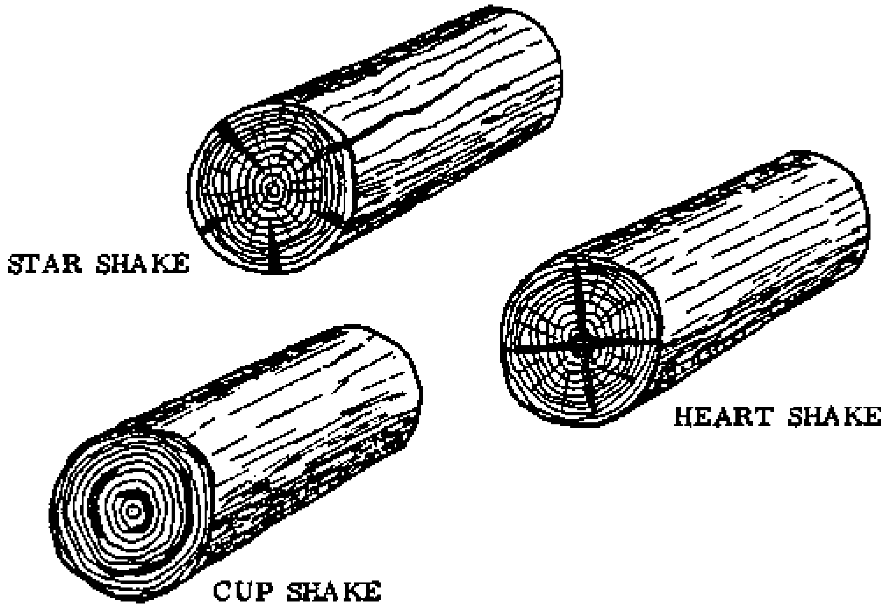

Fig. 2

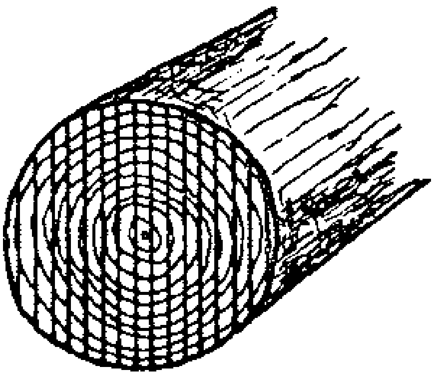

Fig. 3

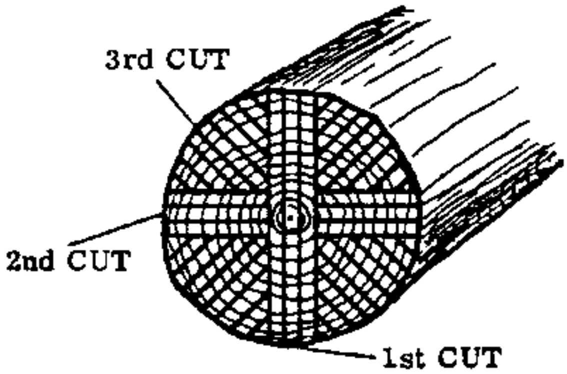

Fig. 4

Don't forget: HARD WOOD is not the same as HARDWOOD is not the same as HEARTWOOD; they all mean different things.

THE PATH FROM STANDING TREE TO SAWN TIMBER

After the tree is felled, the crown is removed and the bark is taken off so no insects can hide in it. The trunk is cut into logs up to 12 metres long (Fig. 1) for transport and handling purposes. These logs are brought to the sawmill where they are converted to sawn timber. Converting the logs to timber means sawing them into boards, planks etc., which can be used for construction purposes.

If the logs cannot be converted immediately, they are kept in water to prevent the formation of shakes. These are long cracks in the unsawn log (Fig. 2). The most common ones are: cup shakes, which occur when the annual rings fail to grow together and star and heart shakes, which can occur in the growing tree or in the cut log as it dries.

There are different ways of converting logs. The method which is chosen depends on the thickness and species of the tree, and the quality of the wood that is needed.

Plain sawing is the easiest, cheapest and most common way of converting tropical woods. It is also called the "through and through" method.

The log saw starts cutting from one side and continues, cutting off one board after another until the whole log is converted to timber (Fig. 3).

The second method, quarter sawing, requires better equipment and more work than plain sawing. With this method, almost ail of the annual rings will be square to the surface of the board, which we will see later is an advantage over plain sawn boards (Fig. 4).

There are still other methods of conversion, but they are not important for us in this course.

CONVERSION TERMS FOR SOLID TIMBER

- Scantlings are pieces about 75 mm wide by 50 mm thick.

- Boards are pieces more than 150 mm wide and less than 50 mm thick.

- Planks are pieces above 200 mm wide and between 38 and 100 mm thick.

- Baulks are more square shaped pieces, about 100 mm wide and 50 mm or more thick.

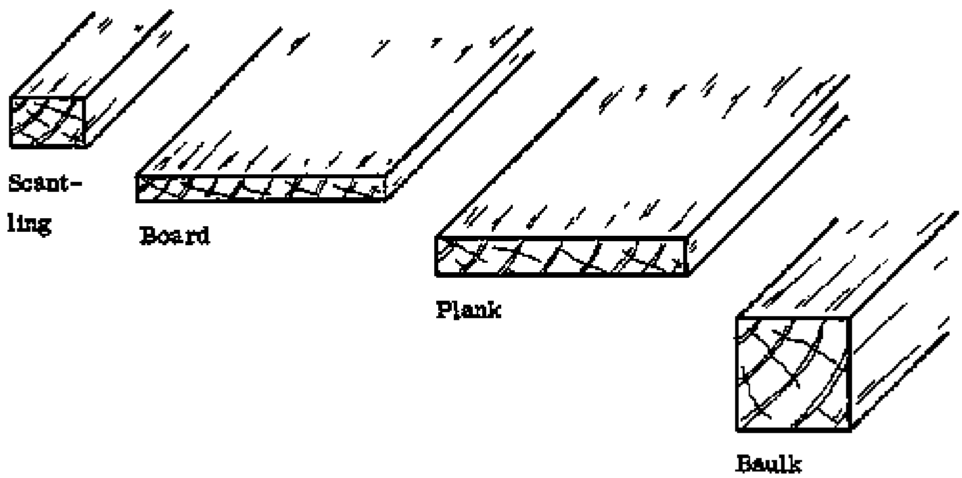

HOW TO ORDER TIMBER

Before you place an order for wood, make sure that you list the correct sizes, quantities and kinds of wood.

Boards are sold in different measurements. Very often the sizes are still given in the imperial system, but the metric system is becoming more common everywhere.

The surface of sawn timber is still rough, so you have to allow for planing the boards when you order timber (refer to Rural Building, Basic Knowledge, p. 90).

Example:

		Size		
No.	Kind of wood	Thickness	Width	Length
50	Odum	2,5 cm	30 cm	2,5 m up
40	Wawa	3,8 cm	30 cm	3,0 m up

If a minimum length of sawn timber is required, the word "up" is added. So "3,0 m up" would mean 3,0 m and longer.

THE PROPERTIES OF WOOD

To be able to use timber properly and store it in the correct way we need to have some knowledge about:

- the moisture content of wood, and
- wood shrinkage.

THE MOISTURE CONTENT OF WOOD

When a tree is cut down, the trunk still contains a large amount of water which has been stopped on its path through the trunk and remains trapped there. The weight of the water at this time is between l/3rd to 1/2 the weight of the tree.

Thus the moisture content (amount of water remaining in the wood) is very high when the tree is freshly cut. Some of the water evaporates (dries off) as the logs are brought to the mill and more will evaporate after the logs are sawn into timber. Each time the moisture content changes, the size of the timber also changes.

SHRINKAGE

As the wood dries, it becomes smaller in size. This is what we mean by shrinkage. Because of the wood structure, it does not shrink equally in each dimension; shrinkage will be up to 10% along the annual rings, about 5% at right angles to the rings and no more than 0, 5% in the length of the board.

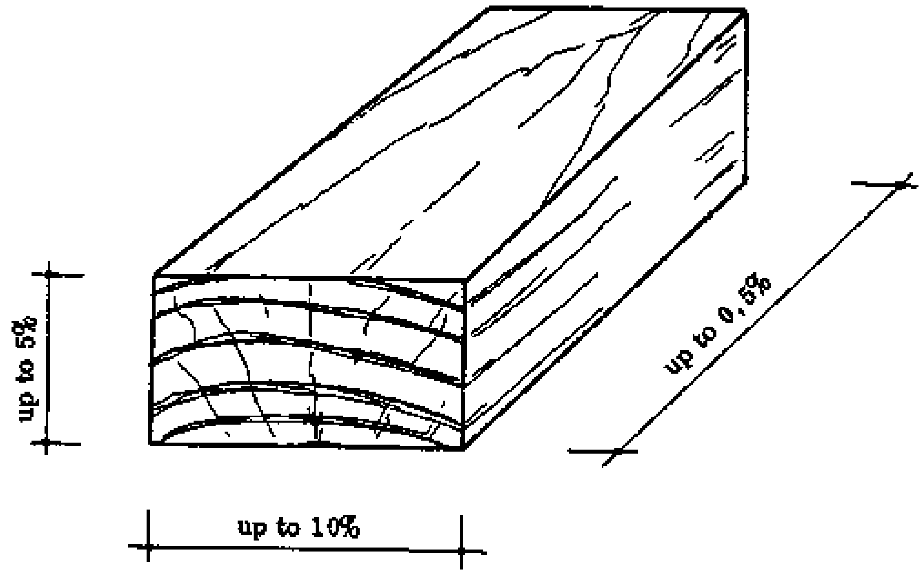

Here we can see the advantage of quarter-sawn timber, in which the annual rings are mostly at right angles to the width of the board. The biggest size change (10%) will be in the thickness of the board, where it usually doesn't matter so much. The shrinkage in the width will however still be up to 5%.

In plain-sawn boards, the rings lie mostly across the width of the board and the board will shrink more and also tend to get out of shape as it dries, because the rings change directions within the board.

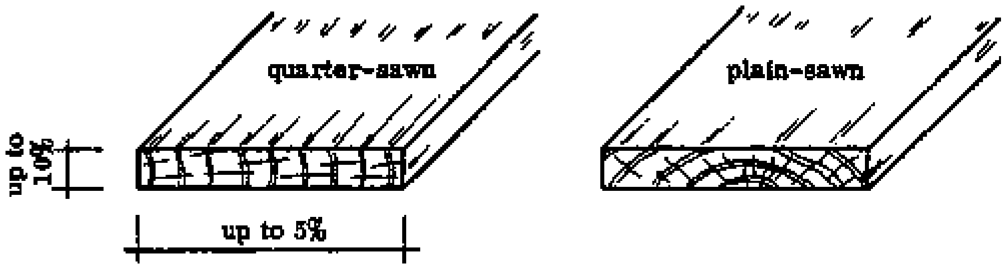

Shrinkage in the length of the timber can almost be ignored, and will only matter when you join boards together end to end over longer distances.

You should know that different woods shrink differently, for example Odum will shrink more than Wawa.

The weather has a great effect on the size of wood. In northern Ghana especially, the very great changes in the humidity (the moisture in the air) between the dry and rainy seasons result in a lot of problems for the builder.

The very dry air of the dry season and especially that of the harmattan causes wood to dry out too much and shrink. You will find that the boards easily crack or split when you work on them.

During the rainy season the humidity is very high and this results in a higher wood moisture content. This means that the wood actually expands quite a bit. The wood may feel wet to the touch. You might plane a board straight and true one day, and find the next day that it is bent again.

Keep the effects of the weather in mind when you construct anything out of wood. For instance, you want to build a solid door out of Odum. If you build it in the dry season it should not fit tightly into the door frame, so that it can still open when it swells in the wet season. If you build it in the wet season it should fit well, so that the gap between it and the frame is not too wide when it shrinks in the dry season.

NATURAL SEASONING

The builder should know that he must never use freshly sawn timber. The timber must first be seasoned, which means that it is dried to a certain moisture content which is most suitable for building work, so that it changes its size as little as possible after it is used in a piece of work.

The kind of seasoning we do in Rural Building is "natural seasoning", and it is done by storing the wood for some months.

After seasoning, the moisture content of the wood should be low enough to use it for building work. However, even well seasoned timber will still be affected due to the changes in humidity from the dry to rainy seasons.

Well seasoned timber will still shrink or expand up to 6% in the direction of the annual rings. For example, a board which is sawn in such a way that the annual rings are along the width (see plain sawing) might have a width of 30 cm during the dry season, while in the rainy season it can expand up to 31 1/2 cm wide. This means that whenever possible you should choose your boards in such a way that the changes in size don't cause problems in the finished piece.

NOTES:

WARPING

Seasoning can cause boards to bend. This happens because the moisture content differs from one part of the board to another, especially if one part gets more sun or rain, when it is stored improperly. The boards should be stored in such a way that air can reach every side of them and all sides are equally dry.

Wood that is not straight grained also tends to warp as it dries.

There are four different kinds of warping: bowing, cupping, springing and twisting. These are illustrated below.

Warping of boards can be partly avoided by proper storage of the wood, which we will discuss in the next section. To prevent warping of finished workpieces such as door and window frames, they should be installed as soon as possible after they are completed.

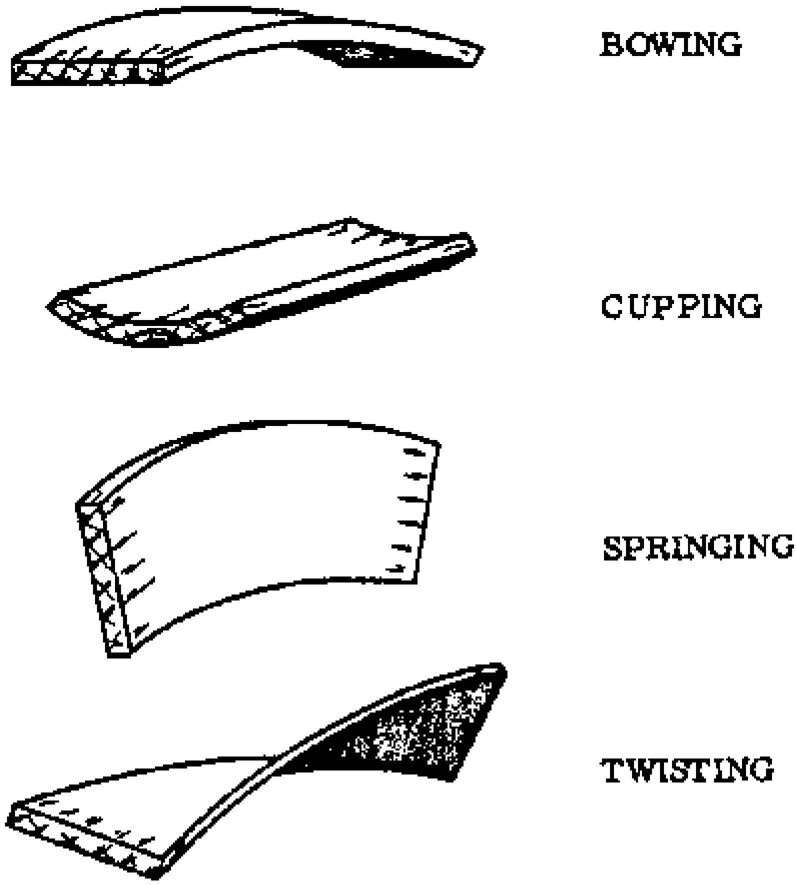

TIMBER PILING

In previous lessons, we learned about why seasoning is important to reduce shrinkage. Seasoning also helps to prevent decay and attack by insects and fungi. In natural or air seasoning, the wood is kept protected from sun, rain, and insects, but air is permitted to circulate freely around the wood.

The site where we put the wood to season is very important. It must be open and well drained; all weeds and grass should be removed and the base should be covered with gravel, or even better, with concrete, to prevent growth of new weeds under the stack. Ashes can also be spread around to keep away termites.

Strict cleanliness should be observed around the stacks. Sawdust and short pieces of wood left lying around can start rotting and attract termites or fungi, or they might even catch fire during the dry season and destroy the entire stock of wood. Take extra care with Wawa, as it is easily attacked by insects or fungi.

The entire pile should be shaded from the sun, to keep the timber from drying out too rapidly. The stack should be oriented with the length in the east-west direction, to minimize the effects of rain and sun.

LAYOUT OF THE WOOD STACK

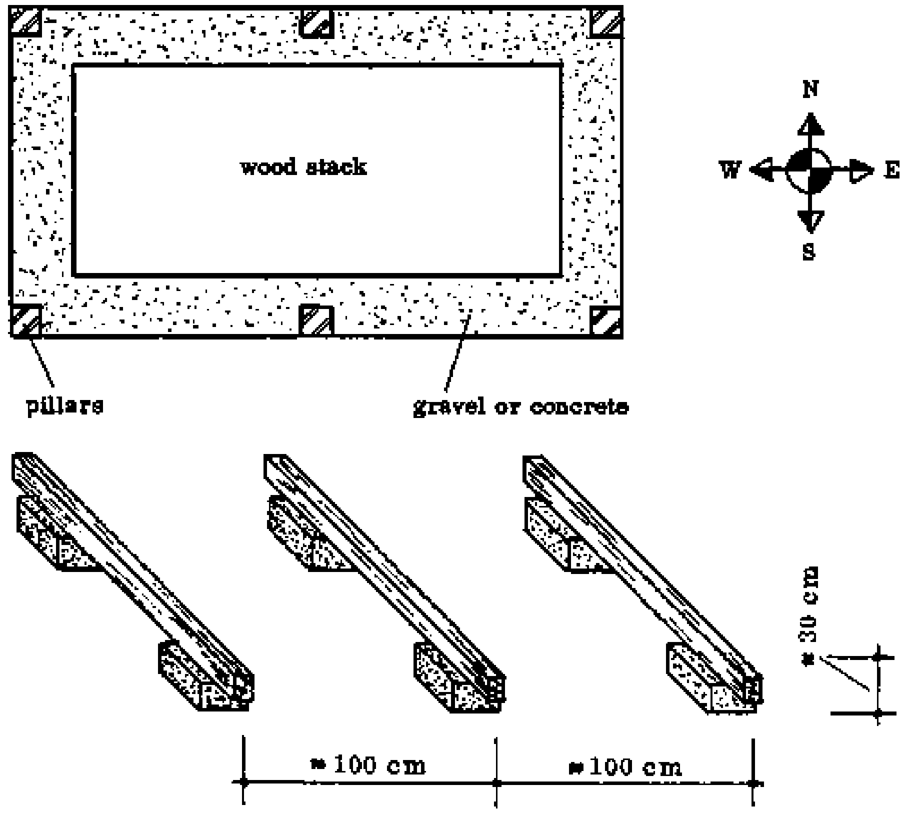

Fig. 1

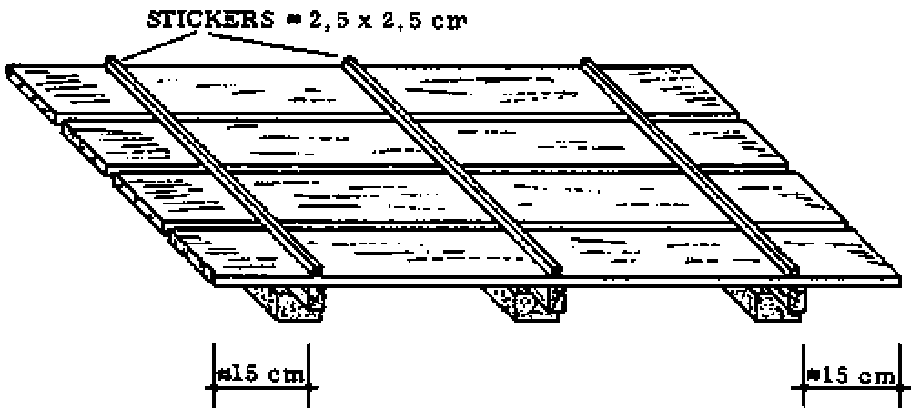

Fig. 2

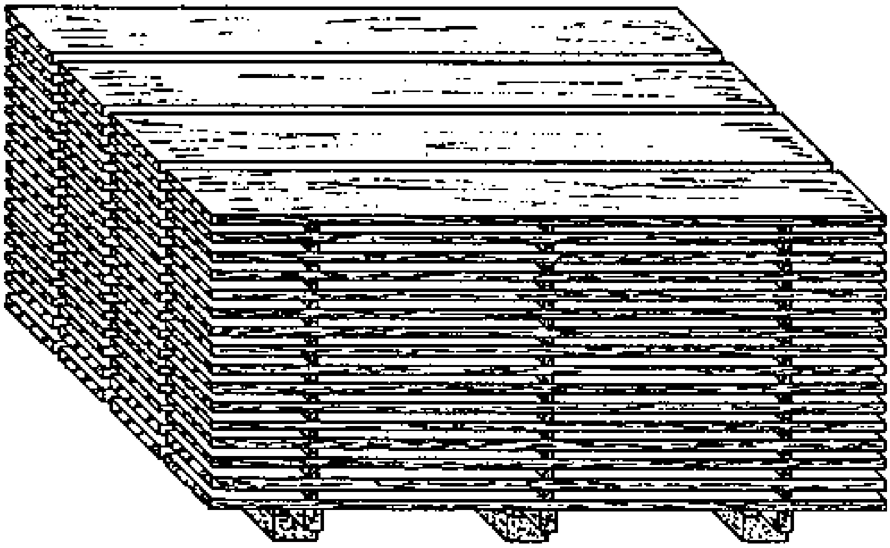

Fig. 3

MAKING THE STACKS

The bases of the stacks are sandcrete blocks (not wood, which might be attacked by termites). On these blocks we set the cross pieces, which are straight baulks without any twisting, because they must carry the whole weight of the stack. The length of the cross pieces will be the width of the stack. They should be perfectly in line on top of the bases (Fig. 1).

The pile should be level from side to side, but may slope a bit lengthwise. Place the cross pieces about 100 cm apart. The end pieces should be about 15 cm from the ends of the boards (Fig. 2).

On top of the cross pieces, put the first layer of boards. Between the layers of boards, put wood strips (stickers) to allow air to flow between the layers (Fig. 2). The stickers should be all exactly above the cross pieces and each other as we build up the stack (Fig. 3). If this is not done correctly the boards may start bending.

The stickers should be square in section so you don't have to take care to put them all flat or all edgeways. They should be around 25 mm thick. All the stickers should have the same thickness, or they may cause the boards to bend or the stack to collapse.

Always stack the wood in such a way that the pieces you will need first are on top.

If you have some wood that you want to reserve for a special purpose, it may be secured by tacking a short stick across the end of the pile.

The stack should always be covered. Make sure that you leave the stack covered and in order after you take out wood.

NOTES:

SPECIFICATIONS OF WOODS WIDELY USED IN NORTHERN GHANA

ODUM

Local trade name: Odum

Standard (international) trade name: Iroko

The tree is up to 60 m high and 7 m in girth (circumference).

Wood characteristics:

The wood is hard and of medium weight.

It is variable in colour, from yellow to dark brown. When freshly felled, it is yellowish green.

The sapwood is paler, about 2,5 to 7,5 cm wide and it is quite distinct from the heartwood.

Durability:

Odum is very resistant to decay when kept dry but it is liable to be attacked by fungi in damp situations. The sapwood is often attacked by pin-hole borers and termites.

Seasoning:

It is easily naturally seasoned.

Working qualities:

It can be worked with moderate ease by most hand tools and it finishes well. Stonelike deposits are sometimes present and these may cause damage to cutting edges. The wood can be nailed, screwed or glued with no problems. When very dry it can be difficult to nail.

Uses:

Odum is probably the most generally useful tropical African hardwood and it is widely used locally for all kinds of construction work and carpentry.

WAWA

Local trade name: Wawa

Standard trade name: Obeche

The tree is up to 55 m high and 5,5 m in girth.

Wood characteristics:

The wood is soft and light in weight. It is nearly white to pale yellow in colour and there is no clear distinction between the sapwood and heartwood. The sapwood is about 7,5 to 10 cm wide.

Durability:

Wawa is not resistant to decay. Seasoned timber is liable to be attacked by powder post beetles and termites.

Seasoning:

Natural seasoning is rapid and satisfactory, with only very little warping and little inclination to split.

Working qualities:

It works easily with all hand tools. To avoid roughening the surface, use very sharp tools. The wood is rather soft and takes nails and screws easily, but it does not hold them well under hard use.

Uses:

It is used for formwork, scaffolding and furniture, where it is not exposed to attack by termites. It can be used only where it will be protected against moisture and rain.

NOTES:

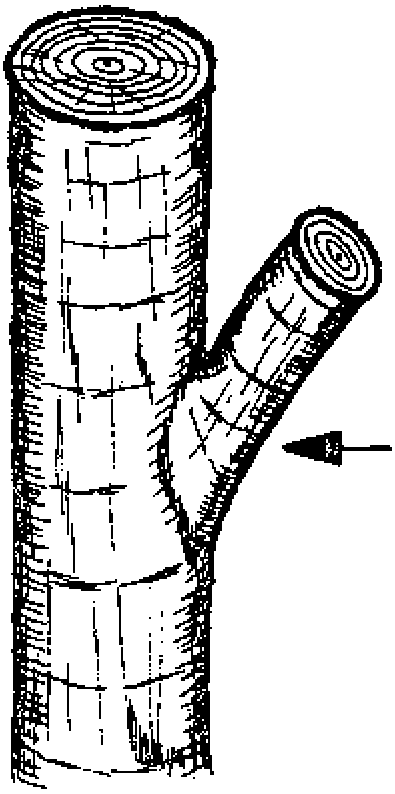

Fig. 1

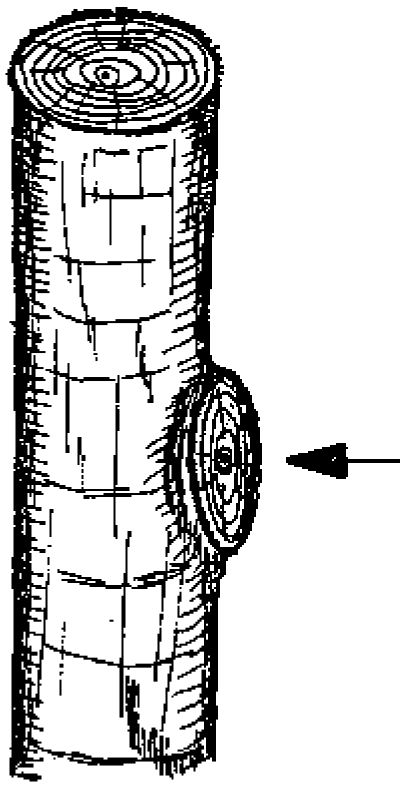

Fig. 2

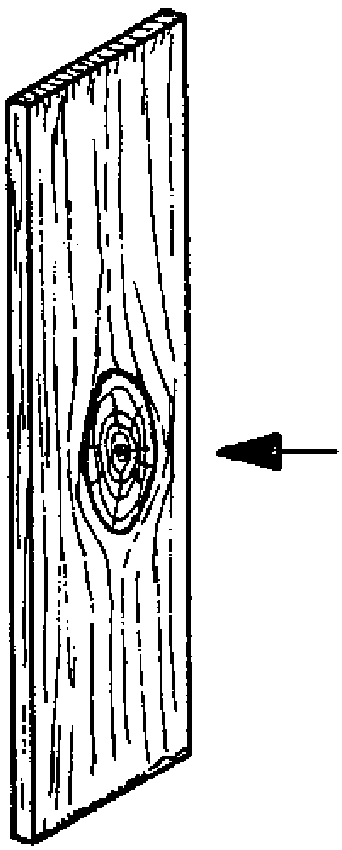

Fig. 3

DEFECTS IN TIMBER

In order to choose the right timber for the work, we need to have some knowledge about defects and diseases in timber. A defect is an irregularity or weakness in the wood which reduces its usefulness and suitability.

The common defects in timber are: knots, twisted grain, checks, wane or waney edge and deadwood.

KNOTS

The place in a tree trunk from which a branch has grown out is called a knot. Each knot marks the junction of a branch with the stem.

There are "live" and "dead" knots.

When a branch is broken off or damaged, a small piece is left attached to the tree. The tree continues to grow around the branch piece, eventually burying it in new wood. These dead pieces of branches are known as dead knots. They have no connection to the living wood, but they occupy a place in the tree, with living wood surrounding them. When the tree is converted to timber, these knots often fall out.

When a tree is felled, all the branches along the stem will be cut off (Figs. 1 & 2). They will leave a knot which is called a live knot (Fig. 3), because it comes from a living branch. Live knots are sound, healthy knots and are always firmly fixed in the wood.

Knots are more or less common in all timber. As long as they remain in place, the presence of a few knots will not harm a piece of timber. However, knots also weaken the wood in some ways and pieces with many knots should not be used for parts which carry heavy loads.

Trees grown in the forest are usually tall, with all the branches at the crown and not along the stem where they could leave knots. Trees which stand apart from other trees tend to have more branches lower on the stem, forming knots which appear when the log is converted.

NOTES:

TWISTED GRAIN

This defect occurs when the tree grows crookedly. The sawn timber tends to twist and it is difficult to plane and chisel because of the changing direction of the grain.

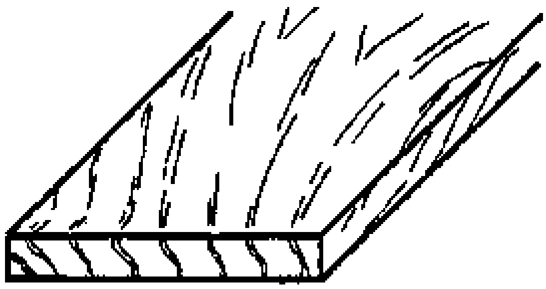

Twisted grain

CHECKS

Splits which occur during the seasoning of the wood are known as checks.

Checks

WANE OR WANEY EDGE

This defect is due to a lack of wood on the edge of the timber, from whatever cause.

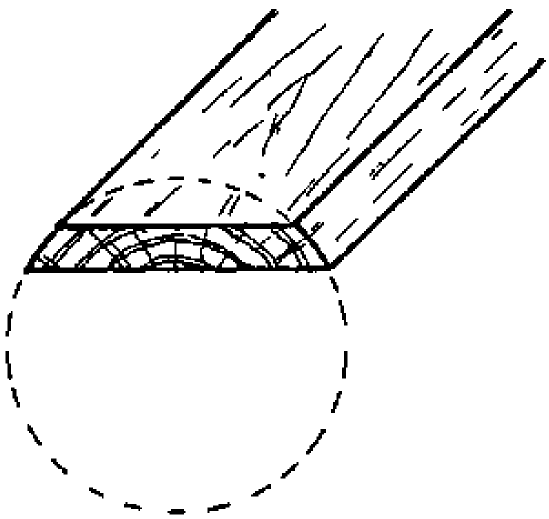

Wane or waney edge

DEADWOOD

Timber made from dead standing trees is called deadwood.

DISEASES IN TIMBER

Diseases in building timber are caused mainly by attacks from fungi and insects

FUNGAL DISEASES

A fungus is a kind of plant which is not able to make its own food from sunlight, air and water, as most plants make theirs. Instead, it must get food by breaking down dead matter such as wood.

The best places for fungi to grow are dark, damp, warm places with little air movement.

There are many kinds of fungal attack on wood. We will only deal with the most common ones, dry rot and blue stain.

Dry rot is the most common fungal disease of building timber. It spreads easily and since the fungus actually feeds on the wood, it can cause a tremendous amount of damage. Dry rot is especially a problem with built-in work such as frames or cupboards where the wood is in direct contact with masonry work, because there; it is often damp.

The appearance of the Infected timber depends on the age and the extent of the disease. In the early stages, it looks as if pieces of thread are hanging from the wood. These quickly develop into a network that looks like a spiderweb, gray in colour. If the wood is very damp, clumps like cotton wool may form and turn into brown or dark red sponge-like growths that often are greater than 30 cm in diameter. On the surface of the sponge-like mass, seeds are produced which spread the disease to the other parts of the building.

Blue stain is one of a few relatively harmless fungi which cause stains on wood. It appears as a light blue discolouration, usually in lighter coloured wood such as Wawa, in sapwood and sometimes in unseasoned timber. The strength of the timber is not affected by this stain.

NOTES:

PREVENTION OF FUNGAL DISEASES

It is always better to prevent disease in healthy wood than to wait until disease is present and then try to treat it. Infection of timber can be prevented by following some simple precautions:

- It is important to ensure that fungi cannot find the conditions that they need to live, namely warmth, dampness and poor air circulation. Therefore the places where timber is built-in should always be dry and well ventilated.

- Use only healthy, well seasoned timber.

- Workpieces should be designed and constructed so that water drains quickly away from the wood.

- Use paint or preservatives on the wood if possible.

- Wood should not be in direct contact with concrete or masonry. If that cannot be avoided, the wood must be treated with a preservative. It is best to also use tarred paper to separate the wood from the concrete or plaster.

- Good storage, especially of unseasoned timber, helps to prevent attack by fungi (see Timber Piling).

REMEDIES FOR FUNGAL ATTACKS

Dry rot is very difficult and expensive to get rid of, once the timber is infected.

- First find if the timber is still strong enough to serve its purpose, if not replace it.

- Cut off and burn the affected parts.

- Find the cause of the dampness and provide good ventilation to the area (for example, repair defective roofs). Repair the damaged areas with new timber.

- Apply preservative to the timber.

- For blue stain, simply remedy the damp conditions, and provide good ventilation to the wood.

NOTES:

INSECT ATTACK

Most damage to wood by insects is caused by members of the beetle family and by termites.

BEETLES

The eggs of the beetles are laid in cracks on the wood surface and they develop into grubs or larvae. The larvae damage the wood by making small holes in the surface and then digging tunnels into it. They chew the wood and convert it into powder. Small piles of wood powder are pushed out of the holes and these are the sign that the wood is infested. When the larvae have eaten their way through the wood, they will leave it and fly away as fully developed beetles.

PREVENTION OF BEETLE ATTACK

It is quite difficult to prevent attack by beetles, especially in Wawa wood, since most beetles can fly. Some simple precautions can help.

- Paint, varnish, wax or wood preservative should be applied on all surfaces. The smell often keeps insects away. Chemicals are available which protect the wood; you should always follow the manufacturer's directions in using these.

- Beetles usually attack the sapwood first, because it is softer than the heartwood. This is why the sapwood should always be cut off.

- If whole logs, poles or sticks are to be stored, remove the bark first. Insects quickly multiply in wood from which the bark is not removed.

REMEDY FOR BEETLE ATTACK

When you suspect an attack, immediately inspect the wood for beetles. Check whether the wood is still strong enough to serve its function. There are chemicals available to kill the insects. Use them carefully and follow the manufacturer's instructions, as most of them are poisonous.

TERMITES

The greatest damage to wood here in Ghana is done by termites. They build their tunnels from the soil into the timber, leaving the surface of the timber untouched, which makes it very difficult to detect an attack in the early stages.

PREVENTION OF TERMITE ATTACK

The best way to prevent termites from attacking wood is to make sure that they cannot reach the wood.

- The wood should never be in contact with the soil, it should always rest on concrete etc.

- All sapwood should be cut off, because that will be attacked first.

- Protect the wood with wood preservatives.

- Do not use Wawa for construction wood, because it is very likely to be attacked.

- When wood must be in contact with the ground, for example with fence posts, it can be partly protected by scorching it over a fire, or by adding ashes around it when you set it in the hole. Termites do not like scorched wood or ashes.

- When wood is stored for seasoning etc., the ground under the stack should be covered with ashes.

REMEDIES FOR TERMITE ATTACK

- Destroy the path of the termites from the soil to the wood.

- Check if the wood is still strong enough for its function.

- Apply a wood preservative or a chemical to kill the termites.

PRESERVATION AND PROTECTION OF TIMBER AND MASONRY

It is important for the Rural Builder to protect timber and masonry in some way, to make them last longer. There are two basic types of protection we use:

- timber preservatives
- protective finishes

Timber preservatives are used only for wood, and they penetrate into the wood. The deeper they penetrate the wood, the better they work.

Protective finishes are used for both timber and masonry. They work by covering the surface with a protective "skin". Protective finishes are discussed on pages 200 and 201.

NOTES:

TIMBER PRESERVATIVES

Wood used in construction is often destroyed by fungal diseases or insects, especially termites. It is very important for a builder to find ways to protect wood from these dangers.

Some methods of protection have already been discussed in the sections on fungal and insect attack. There we mentioned the uses of wood preservatives. Wood is food for fungi and insects. This food can be poisoned for them by wood preservatives. The wood absorbs these preservatives easily and the fungi and insects that try to eat the treated wood will die.

There are two classes of preservatives: waterborne preservatives and oil preservatives. The type we choose will be determined by the intended use of the wood and by what further surface treatment (painting, etc.) will be done.

- WATERBORNE PRESERVATIVES: These are usually available as powders which are dissolved in water and applied to the wood. Since water is the base the preservative can also be washed out again by water. This can happen if rain should reach the wood. For this reason use waterborne preservatives only under dry conditions and not for outside work where the rain can wash them out.

Kinds of waterborne preservatives:

- Aldrex 40 (mix 1 part of Aldrex 40 with 40 parts of water; use 1½ Ideal milk tins of the powder in a No. 28 bucket of water, which will give the correct proportions)

- Any other chemical preservative which is mixed with water.

- OIL PRESERVATIVES: These have an oil base. They not only kill insects and fungi, but also keep water from penetrating the wood. They do not wash out with water, so they are useful for outside work.

The most common oil preservatives are:

- solignum
- creosote
- used engine oil
- Aldrex 40 mixed with engine oil or kerosene; 1 part Aldrex to 40 parts oil or kerosene.

- NOTE: While it is possible to apply an oil preservative over wood that has already been treated with a waterborne type, paint or waterborne preservatives cannot be applied over oil preservatives because they cannot penetrate.

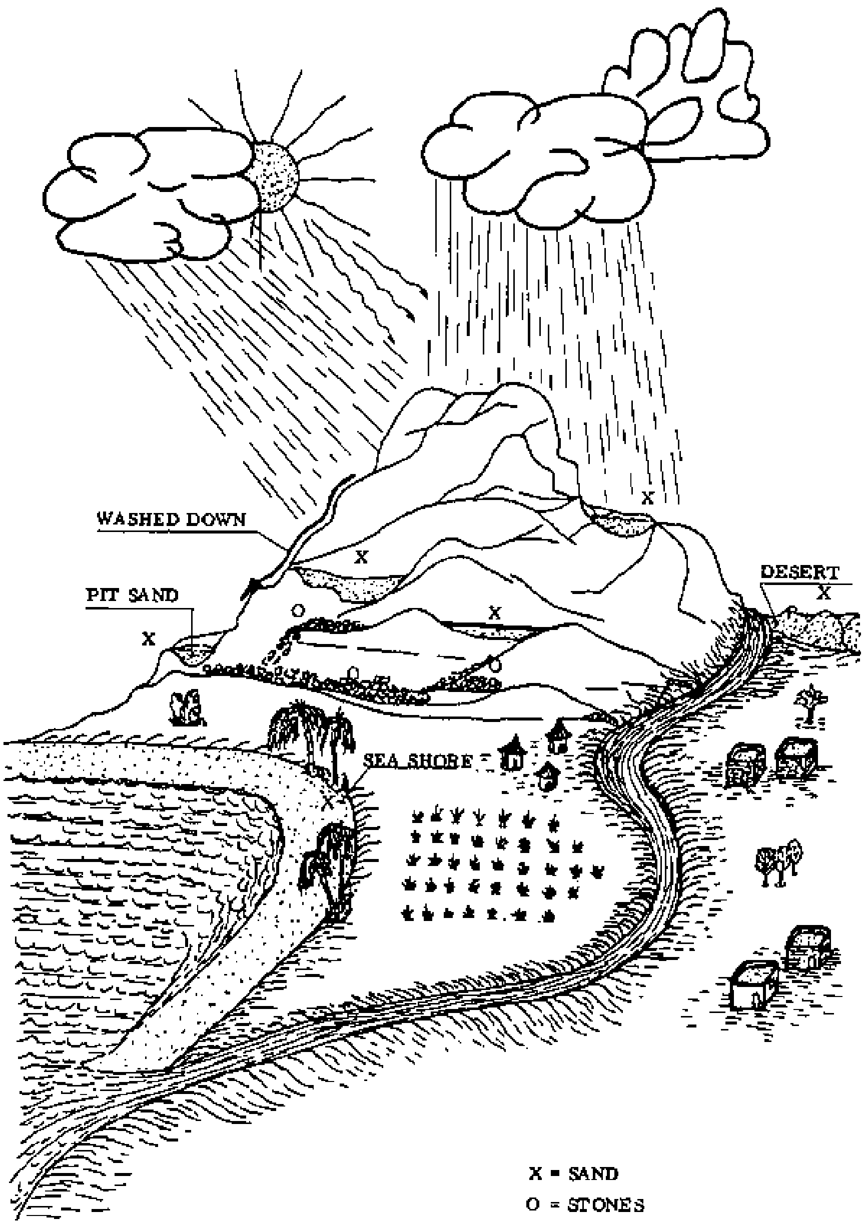

Fig. 1

AGGREGATES

"Aggregate" is the term used for the mixture of different sized stones that form the body of mortars and concrete. Ideally the stone should be graded so that the smaller sizes of stone fit exactly into the spaces between the larger ones and no gaps or holes are left in the mass of mortar or concrete.

SAND

Sand is a mass of finely crushed rock. It is either crushed naturally as seen on the sea shore, in river beds, or in deserts (Fig. 1); or it is artificially produced in crusher plants near rock quarries (where rock is dug out of the earth).

Sand is classified according to the shape of its particles (which differs depending on where the sand came from originally). It is also graded according to the size of its grains (the individual particles of sand).

GRAVEL

"Gravel" is the term commonly used for the larger sized stones of the aggregate. Originally, gravel meant an "all-in-one" aggregate, a mixture of sand and stones of all sizes which can sometimes be found all together in a natural deposit. The individual particles are rounded by the natural action of water and weather.

BROKEN STONES

These are the largest stones of the aggregate, they make up the bulk of concrete. They are found either in natural deposits or scattered on the ground surface; or they are artificially produced in crusher plants. The Rural Builder often must break up large stones with hammers, to make them a convenient size (see Tools, page 14).

- NOTE: These aggregates are the most common ones used for building in the Northern and Upper Regions of Ghana. Of course there are many other types of aggregates (chips, pebbles, rubble etc.), but as far as the Rural Builder is concerned they are of little importance.

NOTES:

QUALITY AND PROPERTIES OF AGGREGATES

Good mortar and concrete can never be made with poor materials. The cement, sand and stones must all be good quality and the correct types. Sand and stone (the fine and coarse aggregate) together make up more than four-fifths of the concrete mass, so there can be no doubt about their importance. It is not safe to take for granted that every load of sand or gravel brought to the site will be up to standard. Remember that aggregates are either dug from a pit or river bed or they are quarried, and although they may look the same there is a possibility of variation in the quality of different loads.

Particle sizes, the shape and texture of the particles and their surface areas are all important factors in the strength and durability of the concrete or mortar.

- GRADING: A graded aggregate is one that is made up of stones or particles of different sizes, ranging from large to very small. It sometimes happens that a load of sand will have too many coarse particles to make a good mortar, while another load will have too many fine particles. Depending on the job to be done, you might have to mix the two sands together in different proportions to get a suitable aggregate. If the sand contains too many bigger particles it may be necessary to sift these out before using the sand to make mortar, but it could work well for concrete.

The idea is to come up with a "well graded" aggregate; which means that the smaller grains will fit in between the larger ones, leaving only small spaces to be filled with the cement paste. The result will be a good workable mix of adequate strength, using a minimum amount of cement (see sketches below).

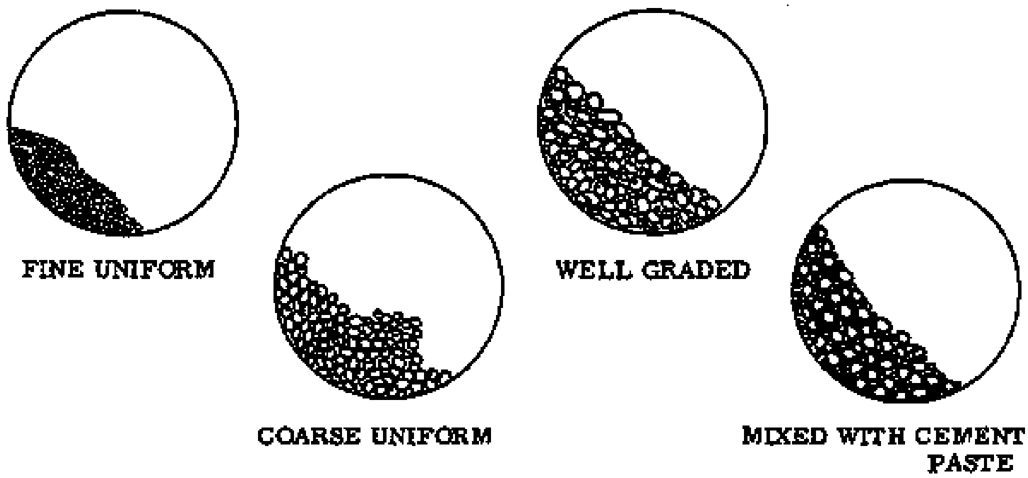

- CLASSIFICATION OF AGGREGATES; For making concrete and mortar, the Rural Builder has two types of aggregate: the fine one which is sand; and the coarse one which is broken stones. Both aggregates are classified according to their grain size and are each divided into two main groups:

Fine sand - from 0-1 mm	Fine broken stones - from 5-25 mm
Coarse sand - from 1-5 mm	Coarse broken stones - from 25-50 mm

Another classification is made according to the shape and texture of the single particles. Some sands and stones have particles which are rounded, with relatively smooth surfaces. This sort of aggregate is found mainly in river beds, along the shores of lakes and coasts, and in deserts. This weather- and water-worn sand is called "river sand" or, because of its properties and workability, "soft sand" (Fig. 1).

The other type of sand has a fairly rough surface and it is found mainly in deposits close to hills and mountains. Artificially made sand made from crushed rock also comes under this classification. It is known as "pit sand" or else "sharp sand" (Fig. 2).

Whether the sand is soft river sand, or sharp pit sand; it will have various grain sizes and is classified as fine or coarse, as in the table above.

- NOTE: In the Northern and Upper Regions of Ghana, most sand is dug from river beds. This does not necessarily mean that the sand will be "soft". Often it is a sharp sand or between soft and sharp, because the particles don't get exposed long enough to weather and water to become rounded and smooth.

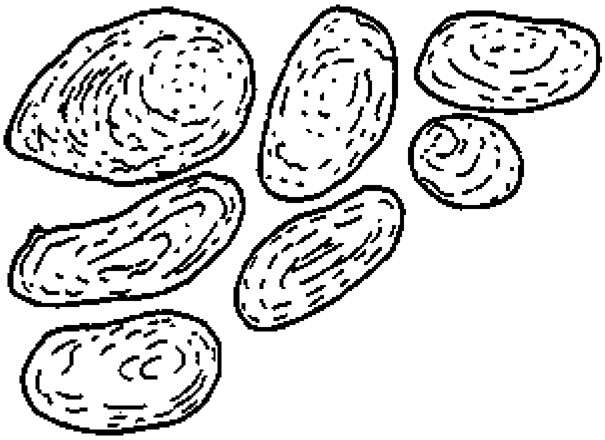

Fig. 1: SOFT SAND (SMOOTH SURFACE)

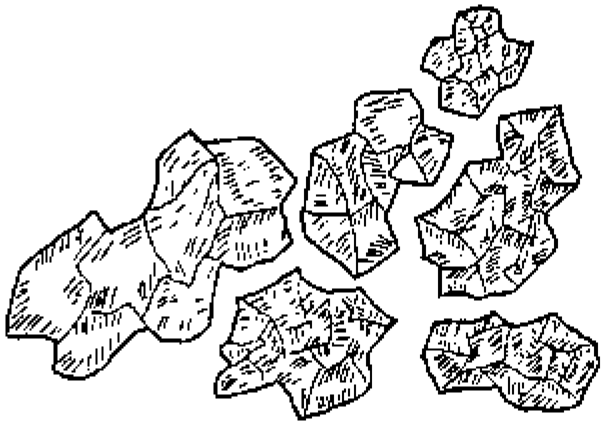

Fig. 2: SHARP SAND (ROUGH SURFACE)

An important factor in the quality of an aggregate is its cleanliness. Clay, mud, or fine dust (known as silt) in the aggregate will weaken the concrete or mortar; while any rotting vegetable matter (organic impurities) like leaves, grass or roots may interfere with the setting of the cement.

- THE HAND TEST FOR SAND: As a first test for cleanliness, simply pick up a little sand and rub it between your hands. If your palms stay clean, the sand is clean enough. If not, the sand may contain too much silt.

- THE SILT TEST FOR SAND: You yourself can carry out a simple test to get an idea of the amount of silt in a natural sand (though not in an artificially crushed rock sand).

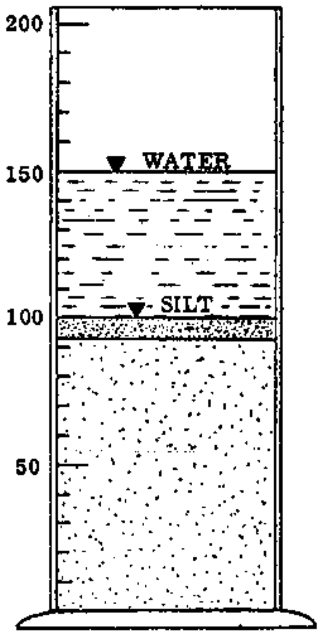

To test accurately you should have a measuring cylinder which is marked in millilitres, shown as "ml", usually up to 200 ml.

First make a salt-water solution by putting one teaspoon of salt into 1/2 litre of water. Fill this solution into the measuring cylinder, up to the 50 ml mark.

Next pour in the sand until the level of the sand is up to the 100 ml mark. Add more salt water until the water reaches the 150 ml mark, cover the cylinder and shake it well.

Stand the cylinder on a level surface and tap it gently until the top surface of the sand is level. Leave it to settle for 3 hours and then measure the height of the silt layer on top of the sand. This should be no more than about 6 ml, or about 6% of the total amount of sand.

- NOTE: If the sand contains more than 6% silt, you would have to use more cement and the concrete would shrink more during the hardening process, causing cracks in the product.

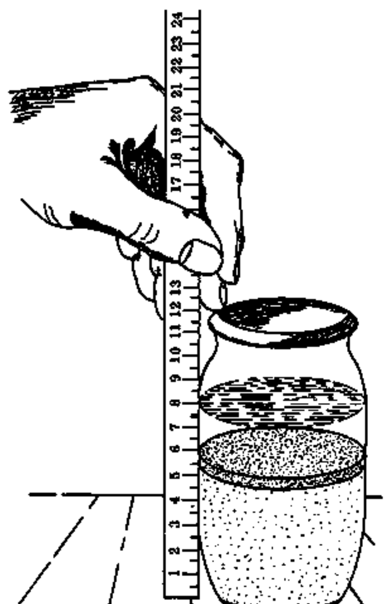

If you have no measuring cylinder, you can use a 0,5 kg jam jar, though this may not be quite accurate.

Put about 5 cm of sand loosely into the jar and pour some salt water on it until you have about 2, 5 cm. of water above the sand. Now cover and shake the jar, and leave it to stand for about 3 hours.

You will see a layer of silt on top of the sand. Measure the depth of the layer, and measure the sand below it. There should be no more than about 3 mm of silt, or about 6% of the amount of sand.

- ORGANIC IMPURITIES: The Rural Builder can carry out a test for organic impurities using a glass jar. Put sand into the jar and fill up the rest of the jar with water. Cover and shake the jar and leave it standing for some minutes. If the water above the sand is brown or very dirty, the sand contains organic impurities and cannot be used.

Better sand can be found by simply removing the top layer of sand, about 5 cm deep, before taking sand from a dry river bed. This top layer consists mainly of excessive silt as well as organic impurities such as vegetable matter and cow dung. None of this is wanted, because it would cause problems with the concrete or mortar.

- REMEMBER: Wherever your sand comes from, it must be clean and suitably graded. If you use dirty sand, you may find that it mixes very nicely, but you will find problems before the job is finished. The impurities in it may affect the rate of setting and hardening of the concrete or mortar, and decrease the final strength of the work. The fine appearance of the just finished work may be spoiled by cracking and flaking as it dries.

BINDING MATERIALS

LIME

Litre is a very fine white powder, used in mixes for mortar, plaster and render. It is made from limestone or chalk which is burnt in a kiln and becomes quicklime.

The quicklime is usually passed through a machine called a hydrator, where it combines with water and becomes hydrated lime. This is dried, crushed to a fine powder, then bagged and sold. Below is a diagram of the whole process.

Sometimes the lime is sold as quicklime, and the builder adds the water to it himself. This process is called "slaking" the lime or "running it to putty", and it is not described here.

Slaked lime and hydrated lime are chemically the same, but slaked lime has more water in it.

Hydraulic lime is made from limestone or chalk containing clay. It hardens when combined with water; and it also hardens well in damp places or even under water. It is stronger than other limes, although weaker than Portland cement.

Non-hydraulic lime comes from the purest limestones and chalks. It hardens by drying out and then slowly combining with the carbon dioxide in the air.

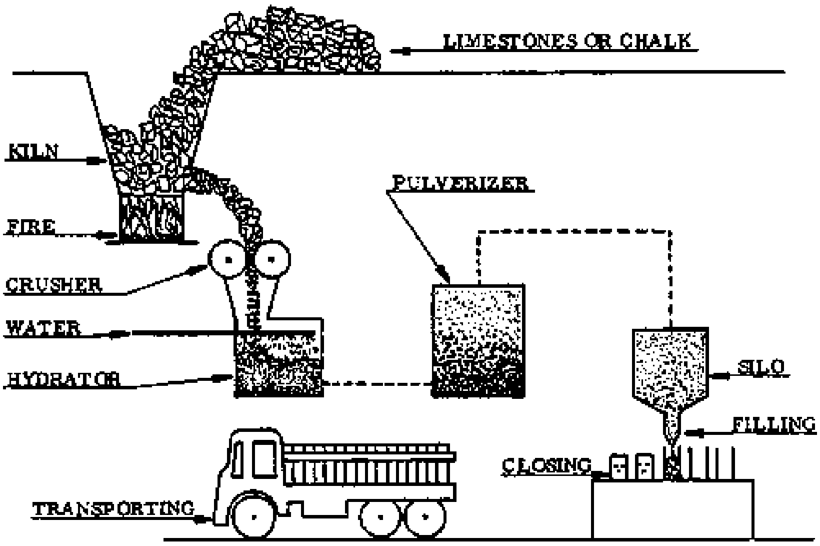

PORTLAND CEMENT

Portland cement is a fine grey powder. Among the various kinds of cements, it is the most commonly used as binding material. It is made of a mixture of chalk or limestone and clay.

The following description of the manufacturing process is illustrated below.

The limestone or chalk and the clay, in appropriate proportions, are fed into a "wet grinding mill" and reduced to a creamy substance known as slurry. The slurry is pumped to a large cylindrical "kiln" which is about 90 m long and 3 m in diameter. The slurry enters the kiln at its upper end while pulverized (crushed) coal, gas or other fuel is blown in at the other end. The temperature inside the kiln at the lower end is very intense, approximately 1500 degrees C; gradually decreasing towards the top end. So the slurry as it moves down the kiln is first dried, then heated, and then finally burnt. It leaves the kiln in the form of very hard "clinkers" shaped like small balls and of a dark brown to black in color. The clinkers are ground up to an extremely fine grey powder, which is the cement. The cement is packed in paper bags of 50 kg capacity.

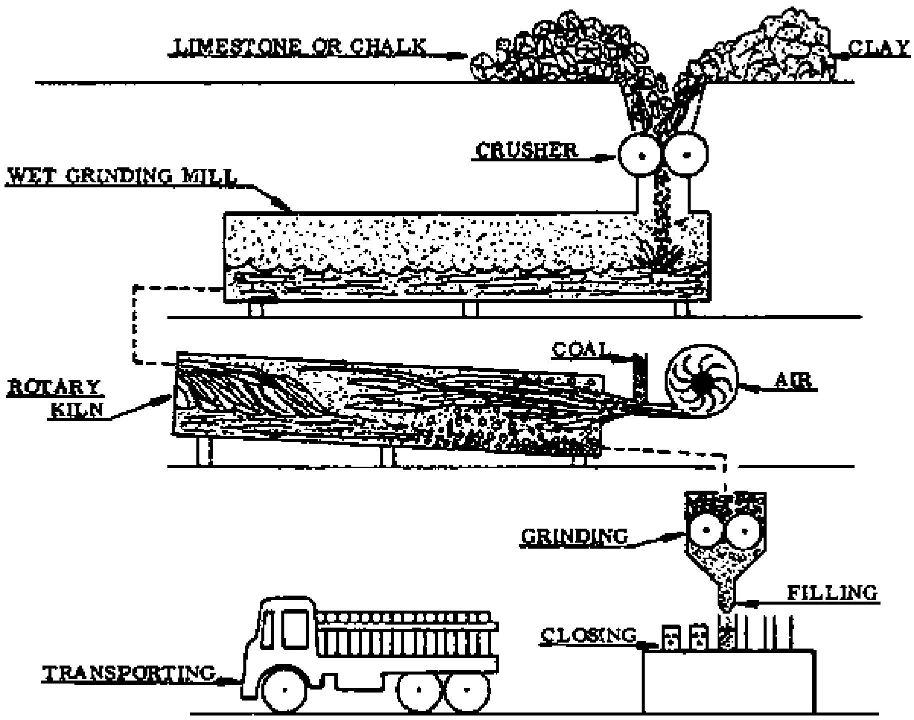

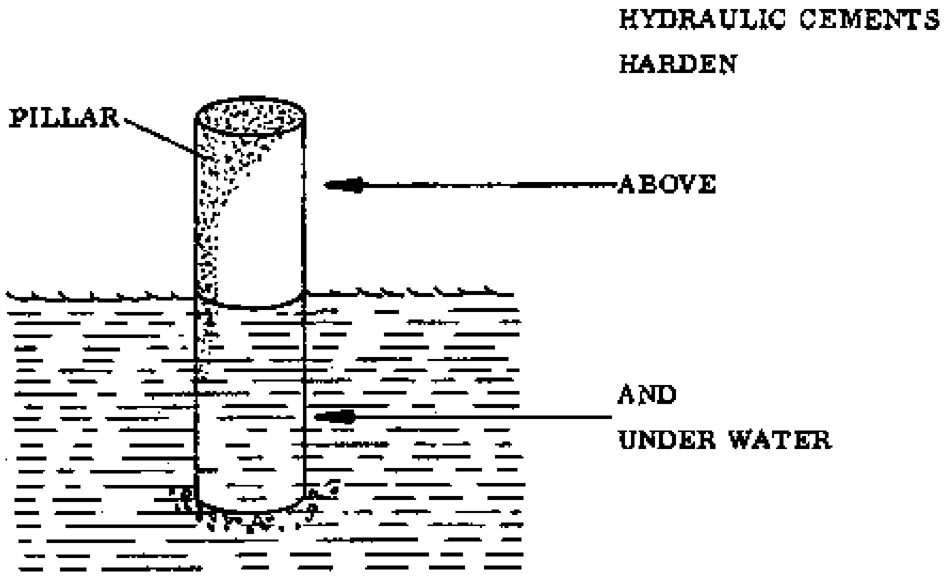

Fig. 1

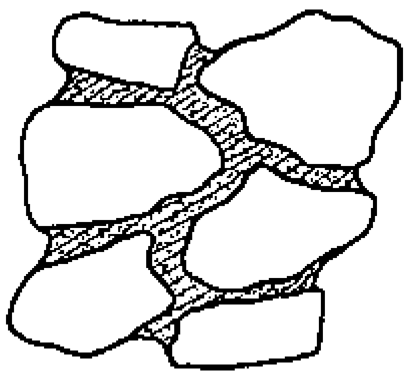

Fig. 2a: HARDENED CEMENT PASTE BINDS STONES TOGETHER AND FORMS A SOLID MASS

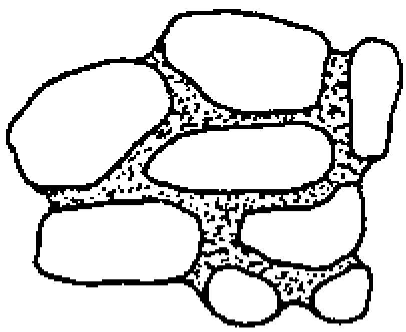

Fig. 2b: BITUMEN OR TAR ALSO BINDS STONES TOGETHER BUT REMAINS A BIT SOFT (WATCH FOR EXAMPLE TARRED ROADS IN THE HEAT)

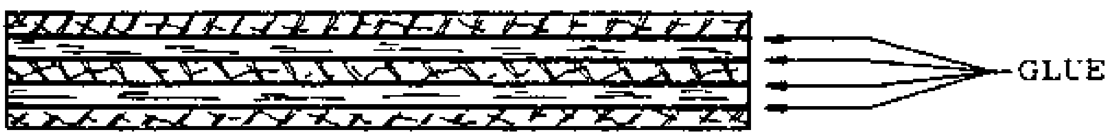

Fig. 2c GLUE HOLDS WOOD, PLASTIC, ETC. TOGETHER TO MAKE JOINTS OR SOLID PIECES, FOR EXAMPLE PLYWOOD

HISTORY OF CEMENT

Some sort of binding substance has been used since ancient times to hold together the stones, bricks etc. used in building. The earliest building cement was probably clay or ordinary mud. The Romans were master builders in brick and stone, and a large part of their success was because of their discovery of a cement that was made by mixing a volcanic ash with burned lime. The Romans also made pure lime mortars and gypsum plasters. These materials were the only building cements until modern times.

The modern era of building cements began about 1760, when an English engineer discovered the most suitable composition for hydraulic cements. These are cements which will harden even under water (Fig. 1). A few years later, in 1824, another Englishman invented Portland cement. He named it because of its similarity in appearance to a natural stone from Portland in England.

- DEFINITION: A cement is any material which attaches or unites two surfaces, or serves to combine particles into a whole.

- TYPES OF CEMENTS (Fig. 2):

a - Building cements (eg. Portland cement and lime)
b - Bituminous cements (eg. tar and asphalt)
c - Adhesives (eg. animal glues and synthetic resins)

NOTES:

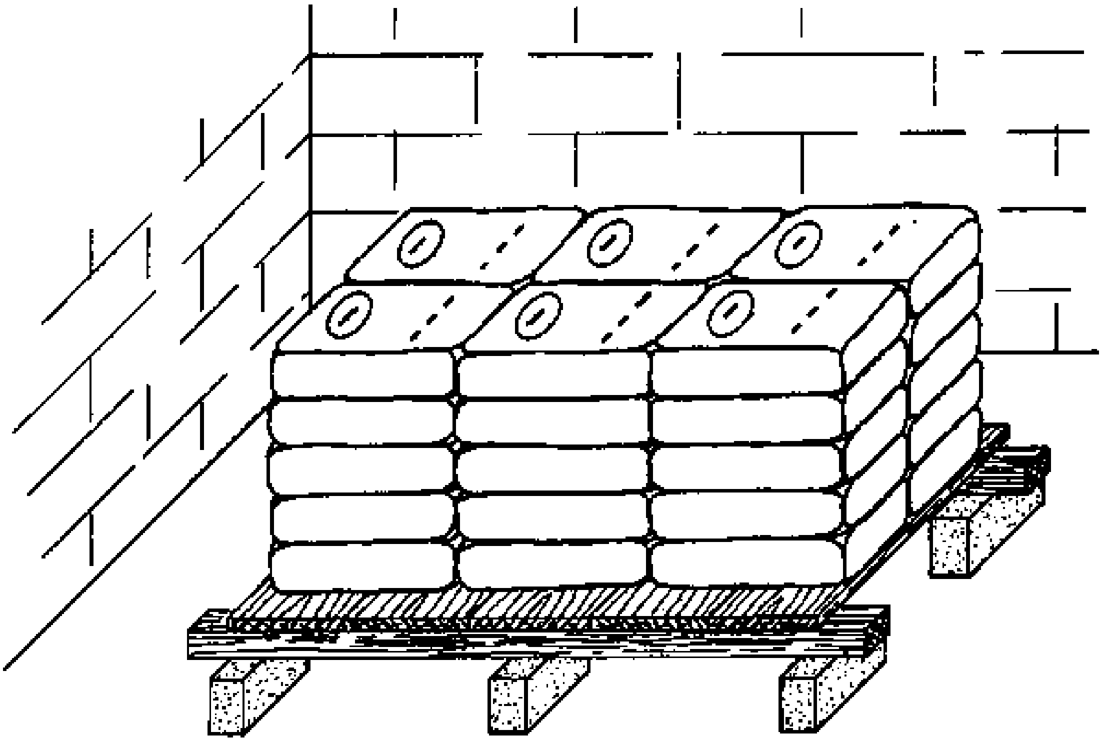

HOW TO STACK BAGS OF CEMENT IN A STORE

Fig. 1

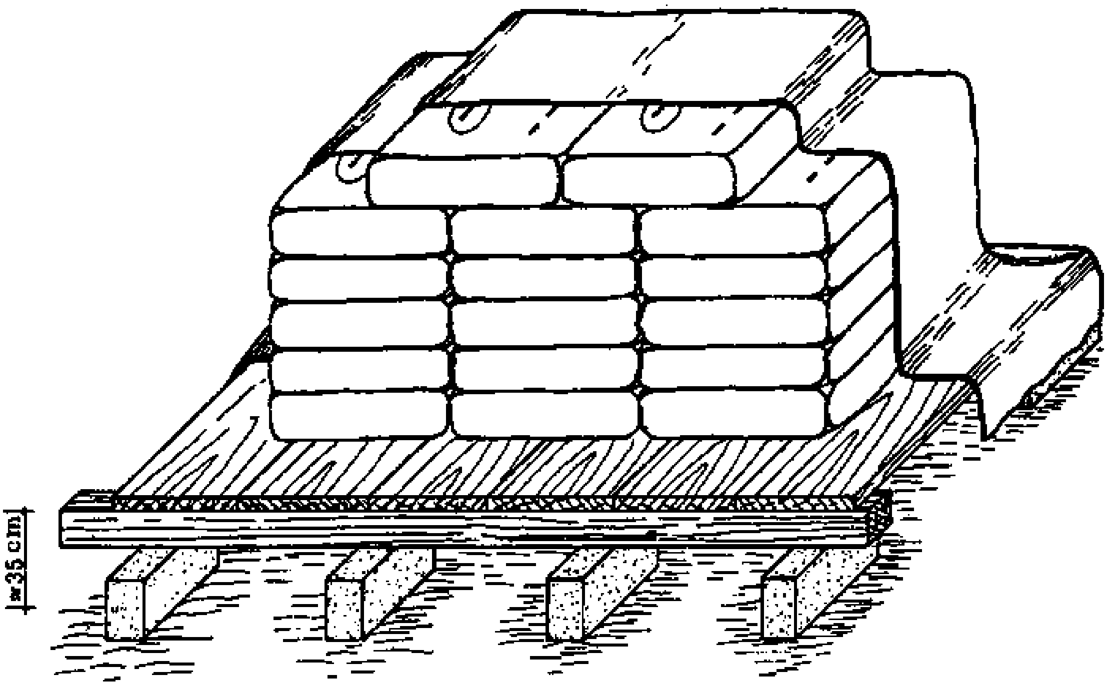

HOW TO STACK BAGS OF CEMENT IN THE OPEN

Fig. 2

STORING BINDING MATERIALS

The quality of mortar and concrete depends on so many factors, but one of the most important of these is the cement. Cement must be stored properly, to prevent it from setting (hardening) before it is used. If the cement gets damp, it will become unusable. Everyone knows that cement should be kept dry, but they don't always realize that contact with damp air can do as much harm as direct contact with water. On all jobs where bagged cement is used, there should be a shed or room to store it.

- STORING IN A SHED: Make sure that the shed or room is water-tight and has a sound, dry floor. If the floor is not dry, make a platform out of boards set on blocks and timber, to raise the bags off the ground (Fig. 1). Stack the bags closely together to keep out air, and away from the walls so that they are not in contact with any dampness on the walls. In very large sheds it is better to cover the bags with plastic sheeting to keep out damp air, especially during the rainy season.

Check the bags from time to time for termites: these may damage the bags and with them the cement. Check also that the roof doesn't leak and that the walls are waterproof.

- STORING IN THE OPEN: On some jobs, bags of cement may have to be stored in the open, with no more protection than a dry base and a covering of tarpaulins or plastic sheets. The sheeting must be properly overlapped to keep out the rain; and the top sheet should lay over all the ones below like a roof, so that the rain can run straight off without getting into the tarpaulin "tent" and wetting the cement.

Even if the cement is to be stored in the open for only an hour or so, there must be a dry platform raised about 35 cm above the ground for the bags to lie upon (Fig. 2).

Whether the cement is stored indoors or out, arrange the bags so that the first batch brought in can be the first ones used, and the old bags don't get left at the bottom of the stack and never used. Prevent accidents by keeping the piles to a height of about 1, 20 m, and never stack them more than 10 bags high.

- REMEMBER: The important thing with cement is to always KEEP IT DRY! Cement starts to set about 30 minutes after mixing or coming into contact with water or moisture.

MORTAR

Mortar consists of the body or aggregate, which is fine sand; and the binding material, which is cement mixed thoroughly with water.

Mortar is used to bed blocks as well as for plastering. A good mortar should be easy to use and should harden fast enough that it does not cause delays in the construction. It must be strong enough, long lasting and weatherproof.

TYPES OF MORTAR

The best mortar for a particular job is not necessarily the strongest one. Other properties like workability, plasticity or faster hardening can be more important, though the strength of the mortar must of course be sufficient for the job.

Mortar should neither be much stronger or much weaker than the blocks with which it is used.

- CEMENT MORTAR: This sets quickly and develops great strength. It is used in proportions of one part cement to three parts sand (1: 3), which makes quite a strong and workable mix; down to a 1:12 mix, a lean mix which will be rather harsh and difficult to use.

- LIME MORTAR: This is usually very workable and does not easily lose water to the blocks, but it is weaker than cement mortar and hardens slower. Lime mortars are nowadays largely replaced by cement mortars or combinations of lime and cement.

- CEMENT-LIME MORTAR: This combines the properties of cement and lime to give a workable and strong mortar. The cement makes the mortar stronger, denser, and faster setting; while the lime makes the mortar workable and reduces the shrinkage during drying, because it retains the water better.

In some areas, lime is not always available, so in this book we will concentrate on the use of cement mortars.

NOTES:

SELECTING THE RIGHT KIND OF SAND

Sand for plaster, mortar and renderings must always be chosen with care. The sand used to make mortar for blocklaying should be well graded, sharp and must not be too fine if a strong mortar is needed (eg. for footings).

The more fine particles the sand contains, the better its workability in the mix, but more cement paste will be needed to cover the surfaces of the particles. This means that in order to improve the workability while maintaining the same strength, more cement must be added which results in higher costs.

The Rural Builder is always faced with this problem and it takes a lot of experience to be able to find a good compromise.

If the sand is found to be too sharp so that it makes a mortar with poor workability, we suggest replacing about 1/3 of it with fine soft sand; but don't replace more than about 1/2 unless you add more cement.

We can do this because the common mix proportion of our mortar is 1:6, while the sandcrete blocks are mixed in a proportion of 1: 8 (cement: sand). When the fine sand is added, the strength of the mortar is reduced to about the same as the strength of the blocks, which is acceptable.

The information above is meant to show the problems concerning the selection of the right sort of sand for a particular job. This book will address these problems repeatedly as we introduce the different kinds of blocks as well as the different jobs.

- REMEMBER: A good mortar should:

a - be easy to work with
b - harden fast enough not to delay the construction
c - stick well to the blocks
d - be long lasting and weatherproof
e - if possible, be as strong as the blocks.

NOTES:

Fig. 1

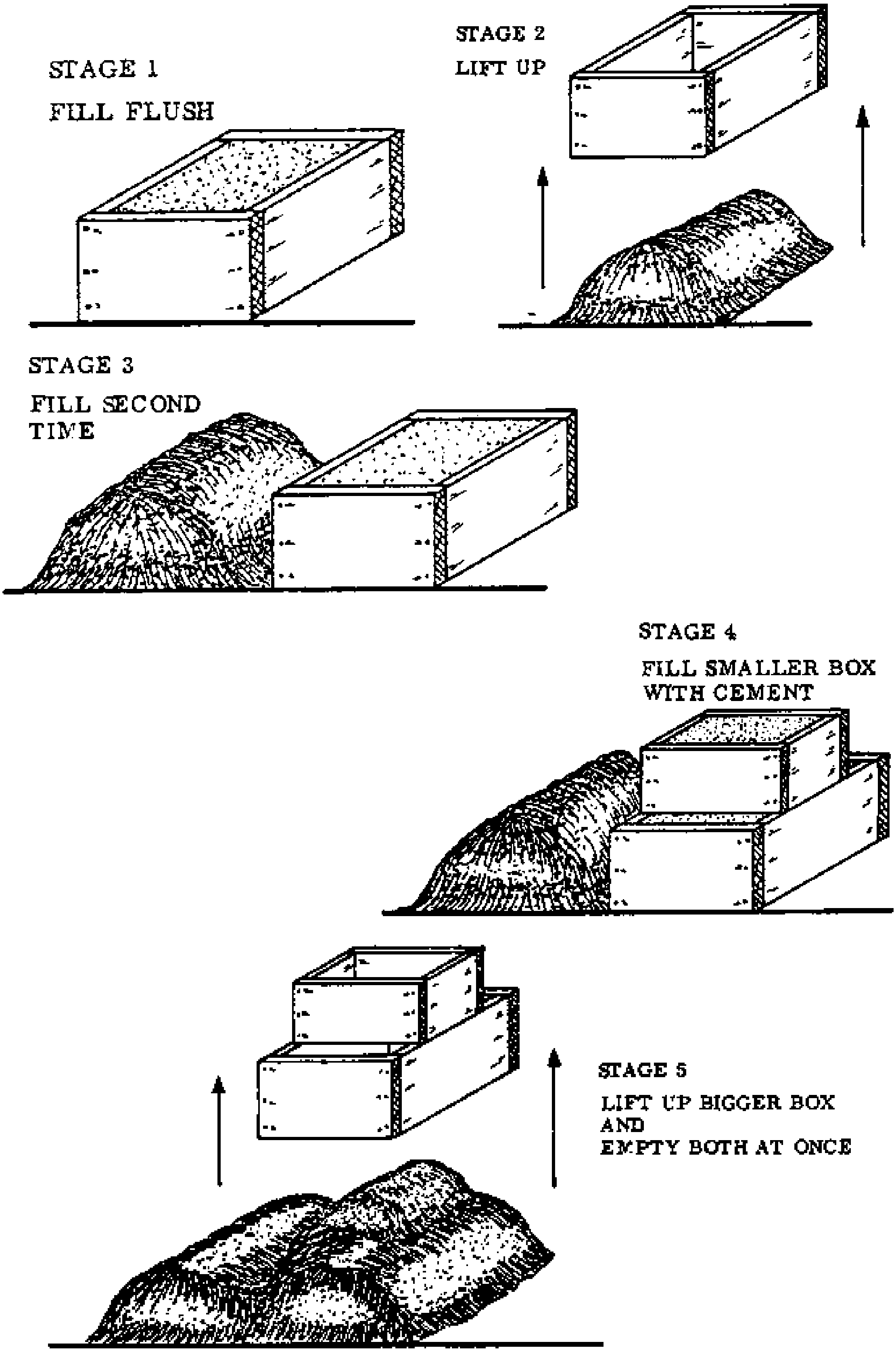
STAGE 1
FILL FLUSH
STAGE 2
LIFT UP
STAGE 3
FILL SECOND TIME
STAGE 4
FILL SMALLER BOX WITH CEMENT
STAGE 5
LIFT UP BIGGER BOX AND
EMPTY BOTH AT ONCE

BATCHING

By the term "batching" we mean that we measure the proportions of the various ingredients of a mix. We already know that the ingredients for a mortar should be mixed in certain proportions. To help us to obtain the correct amounts we can make boxes with the appropriate sizes; this method is known as "batching by volume".

Since a common mix proportion is 1:6 and some special jobs require a mix of 1:3, two batching boxes are made with corresponding measurements. The smaller one for cement measures 15 cm high, 30 cm wide and 38 cm long (inside measurements) giving a volume of 17,1 litres, which is about half a bag of cement or one slightly heaped headpanful (one bag of cement contains 34,1 litres or two slightly heaped headpans).

For the sand, a bigger box is made which must hold exactly three times as much as the smaller one. Therefore its inside measurements are: 30 cm high, 30 cm wide, and 57 cm long. This gives a volume of 51,3 litres, which is 3 x 17,1.

Both boxes are bottomless; they are only frames in order to make it easier to work.

- PROCEDURE: Before you start batching and mixing, it is advisable to make a mixing platform out of lean concrete for all future mortar and concrete work. This provides a firm and clean place so that your mix will not become dirty, no cement paste will be lost, and shovelling will be easier.

For small jobs, the mixing platform can measure approximately 1,5 m by 2 m and may be 5 to 7 cm thick.

For a 1: 6 mix, place the bigger box on the platform and fill it with sand flush to the top edge. Then lift it up and set it down again next to the first pile and refill it in the same way (Fig. 1, stages 1 to 3).

Now put the small box on top of the sand-filled big one, and fill it with cement. It must be filled flush to the top edge in order to get the right proportions (Fig. 1, stage 4).

Now lift up the lower box, taking the smaller one with it and emptying both at once. The result is a heap of sand (6 parts) covered with cement (1 part), ready to be mixed (Fig. 1, stage 5).

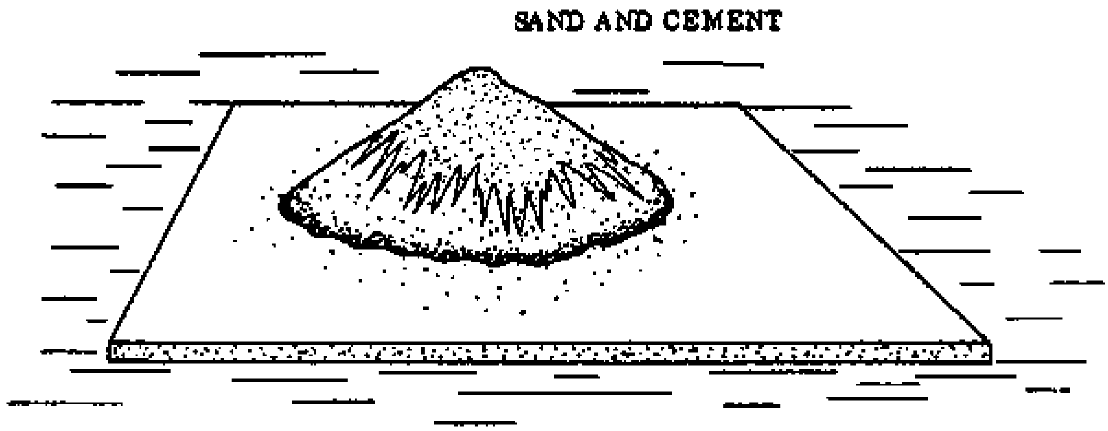

Fig. 1

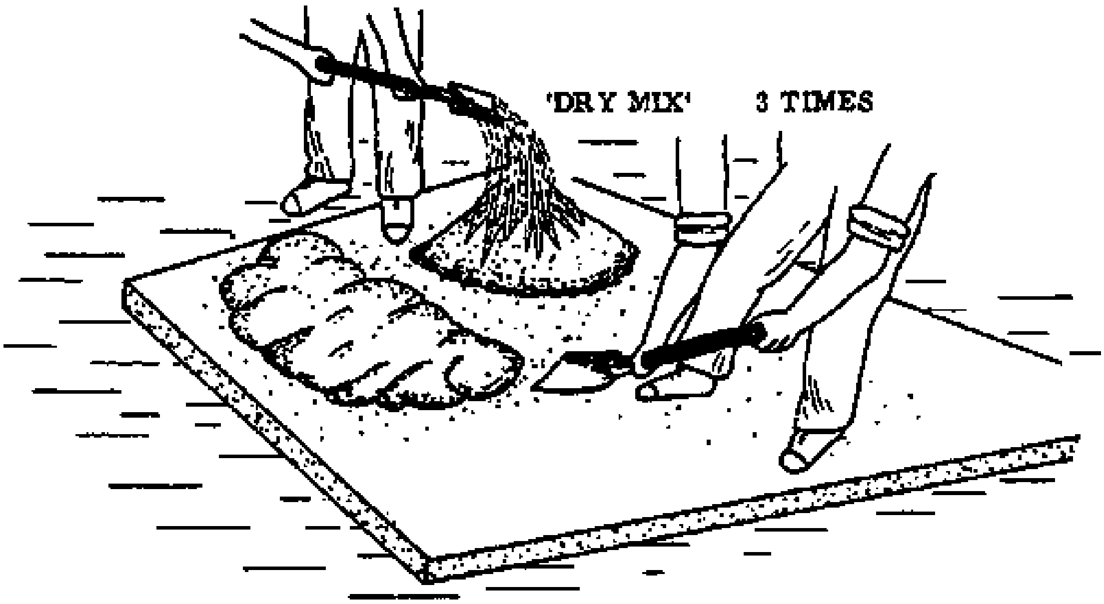

Fig. 2

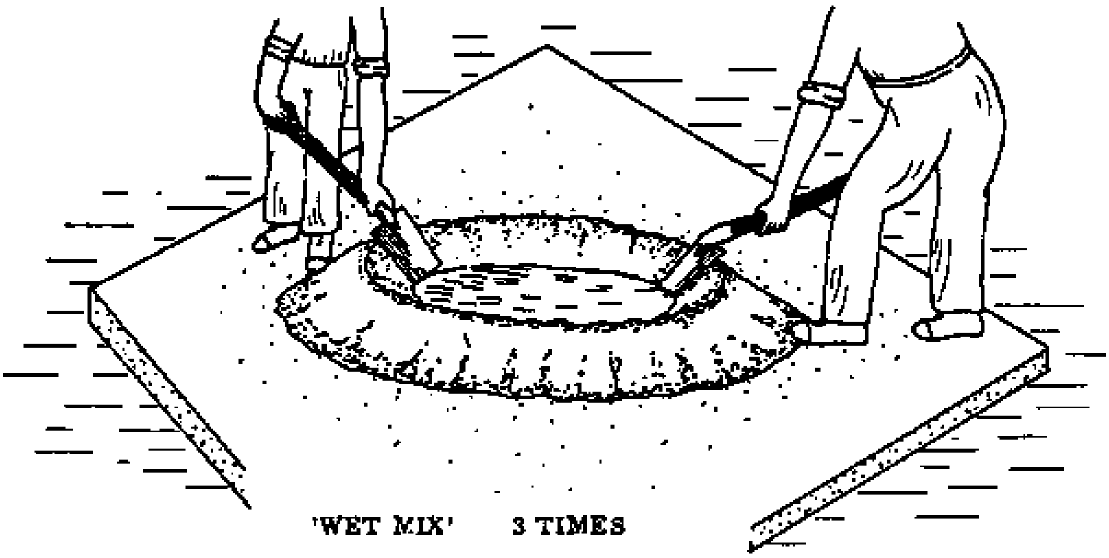

Fig. 3.

MIXING THE MORTAR

Mixing is one of the most important stages in the process of making mortar because the workability and strength of mortar depend so much on the way it is mixed and on the amount of water added to the mix.

- WHAT WATER DOES: Water in the mix does two things: it makes the mortar workable and it combines chemically with the cement to cause hardening. However, only about half the water is required for the chemical reaction and the rest will remain or evaporate slowly as the mortar hardens, leaving small holes or "voids" in the cement.

Obviously, the more water there is in the mix, the greater will be the number of voids and the weaker the mortar.

For your 1:6 mixture, a maximum of 15 litres of water should be added (almost one headpanful); never any more than this even if the mix appears to be too dry, as sometimes happens in the first stage of mixing.

- THREE TIMES DRY: The sand and cement is measured on one end of the mixing platform. With two men facing each other across the pile and working their shovels together, turn the whole heap over once to form a pile at the other end of the slab (Figs. 1 & 2). This turning must be repeated twice and results in a so-called "dry mix".

The correct method for turning over is to slide the shovel along the top of the platform, pick up a load and spill the load over the top of the new pile. The main point is that each shovelful runs evenly down the sides of the cone. This is the best and easiest way of mixing dry mortar and all other motions should be eliminated. When the dry mix is a uniform colour throughout, it is considered to be well mixed.

- THREE TIMES WET: Form the heap of dry mix into a crater or pool, with the sides drawn out towards the edges of the mixing platform. There should be no mixture left in the centre of the pool.

Now gently pour about 3/4 of the total required water into the crater. Turn the shovel over and with the edge scraping along the platform, push some of the dry mix into the pool in such a way that it spreads out, without separating the sand and cement. Handle the shovel carefully so that no water can, escape by breaking through the ring (Fig. 3).

When all of the dry mix has been heaped up in the centre of the platform, it should have taken up all the free water and have a rather stiff consistency (earth-moist).

Now make a second pool, add the remaining water and repeat the rest of the mixing procedure. This will result in a mortar of a plastic consistency. To make sure the mixing is thoroughly done, turn the mortar over a third time,

- CONSISTENCY TEST: You can carry out a simple test to get a rough idea whether the consistency of the mortar is correct (this means the water content).

Fill a headpan with mortar and smooth the surface (Fig. 1). With the blade of your trowel, make a straight cut clear through the mortar to the bottom of the headpan (Fig. 2). Now push the trowel flat under the mortar along the bottom of the headpan, so that the cut in the mortar centres the length of the trowel.

When the trowel is lifted up 2 or 3 cm, the gap in the mortar must open into an oval shape along the outer edge but remain closed along the bottom (Fig. 3).

- NOTE: If you want to improve the workability of the mortar by adding water, remember that this will also decrease its strength. You are therefore strongly advised to add both cement and water in equal quantities (for example 1/2 bucket of water plus 1/2 bucket of cement).

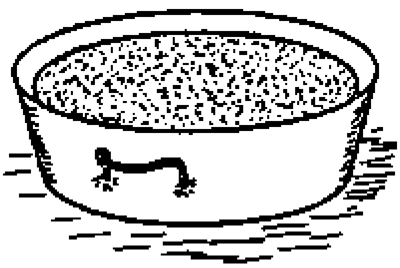

Fig. 1: FILL HEADPAN HALF FULL AND SMOOTH THE SURFACE

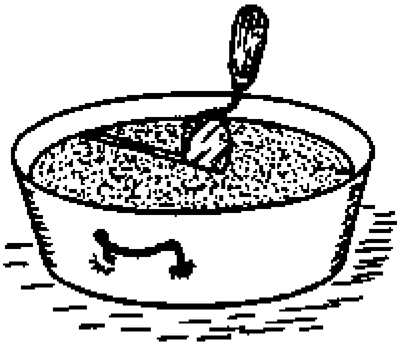

Fig. 2: MAKE A CUT WITH THE TROWEL

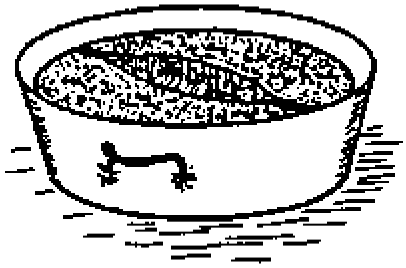

Fig. 3

- REMEMBER: Ready mixed mortar starts setting after only 30 minutes! Never prepare more mortar than you can use within this time.

It is certainly better to mix smaller amounts more often than to allow mortar to spoil; or to do the work very quickly (and sloppily) in order to get rid of the mortar.

Always cover freshly mixed mortar with empty cement bags to keep it from drying out.

NOTES:

CONCRETE

To concrete something means to form it into a mass, or to solidify it.

As far as building is concerned, the term concrete means an artificial stone made by mixing sand, stone, Portland cement and water. This mixture, cast into a form of the desired shape and size, hardens into a stone-like mass: the concrete.

There are basically three materials we start with to make concrete:

- The aggregate, which is made up of the fine and coarse aggregates together, ie. the sand and broken stones. The aggregate makes up the main mass of the concrete; its function is mostly just to add bulk.

- The water.

- The binding material, which is usually Portland cement.

When the three materials are mixed together, the cement and water combine chemically to make a cement paste, which surrounds the particles of the aggregate and holds them together.

NOTES:

CEMENT PASTE

The cement paste component of concrete is what causes it to harden, the aggregate simply remains passive (inactive).

Thus the cement paste must completely cover the surface of every single particle of the aggregate. This means that each stone, no matter whether tiny or big, must be covered all over by a thin layer of cement paste.

This is achieved by mixing all three components very thoroughly and in the correct proportions (see Batching, and Mixing The Mortar, pages 160 to 163).

The cement paste fills up all the spaces between the particles of the aggregate and bonds them firmly together as it hardens.

The hardening process requires a certain amount of water; how much depends on how much cement is added to the mix. The correct proportions can be found in the Tables of Figures, page 234.

After it is set, the hardened cement paste cannot be dissolved again (except by the use of certain acids).

An undesirable further reaction of the cement paste is the drying shrinkage as it hardens. Because of the evaporation of the extra water, the volume of the concrete is gradually reduced. The concrete shrinks and develops cracks.

This reaction can be effectively reduced, if not prevented, by correct curing; as will be discussed later in this book.

Also to prevent cracking, large areas that are covered with concrete; such as floors, should be divided up into bays.

PROPERTIES OF CONCRETE

Concrete has many properties, but most of them are of little interest to the Rural Builder. Therefore this chapter deals only with the three most important properties:

- a - Compression strength
- b - Tensile strength
- c - Protection against corrosion.

NOTES:

- COMPRESSION STRENGTH: It is commonly known that concrete becomes very hard and can withstand enormous pressures; a property which is called compression strength.

This compression strength depends mainly on the properties and quality of the cement paste and the aggregate.

- If the aggregate consists of a soft or weak material, the concrete will be weak also.

- If the aggregate is so dirty that there is no direct contact between the surface of the particles and the cement paste, the concrete will again be weak.

Provided that all the rules for producing a good concrete are observed, the strength of the concrete can be controlled by choosing the mix proportions. For example, a mix proportion of 1:10 is weaker than a 1:3 mix. This is because in a 1:10 mix the particles of aggregate are not completely coated with cement paste, but in the 1:3 mix they are fully embedded in it.

- If not enough water was added to the mix, the cement paste remains too dry and stiff and the concrete will be weak.

- If too much water was added, making the cement paste too thin, the concrete will again be weak.

Therefore the Rural Builder must always carefully follow the correct concrete recipe.

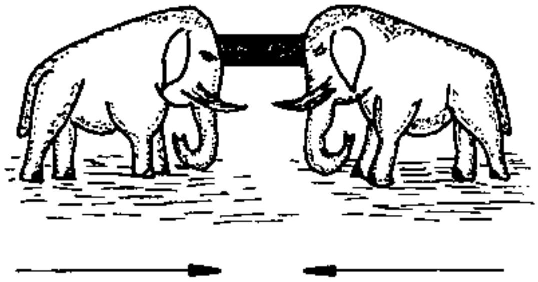

COMPRESSION STRENGTH

- TENSILE STRENGTH: The tensile strength of a material means its capability of being stretched to a certain extent without breaking.

Although concrete becomes very hard, its tensile strength is very limited. It is so low that in practice, the tensile strength of concrete is regarded as being nonexistent. This is why sometimes concrete members of a structure must be reinforced by steel bars embedded in them.

Some types of wood, while they are softer and have a much lower compression strength than concrete, have a far higher tensile strength because of their fiber structure. The wood fibres act in a way like the reinforcement iron embedded in concrete.

Wood is a good building material because of its tensile strength. However, its flexibility makes it subject to bending under loads. Because of this problem, short-span constructions are chosen; or, among other possibilities, reinforced concrete can be used instead of wood.

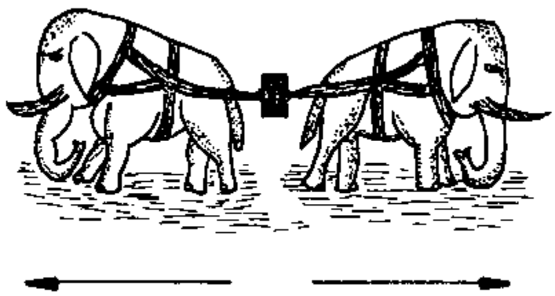

TENSILE STRENGTH

NOTES:

- PROTECTION AGAINST CORROSION: Corrosion means a wearing away, a slow destruction caused by a reaction with air, water or chemicals.

Reinforcement iron which is left unprotected and exposed to air and humidity will eventually start to corrode on the surface and become rusty.

If this process is not halted in time, the rust goes into the bar and it becomes too weak to be used.

In order to maintain the strength of steel-reinforced concrete, the steel has to be protected from rust. This is partly done by the hardened cement paste and partly by structural means.

Ideally, the hardened cement paste hermetically seals the iron so that direct contact with air and humidity is cut off. Even slight rust stains on the iron cannot do any harm because the cement paste protects it against further corrosion.

The protection will not be enough however, unless the builder observes the following rules:

- The reinforcement bars must be completely covered by concrete which is well compacted and without voids.

- The concrete cover must be sufficiently thick, and without cracks.

- In most cases ordinary Portland cement is used and the mix proportion should be no less than 1: 5 for reinforced concrete. (see Tables of Figures, page 234).

Apart from these, all the other rules for producing a good concrete must be observed.

- NOTE: Quality concrete is not a brand. It does not have a trademark on it to say "This is quality concrete". Sometimes the concrete does not even look different from poor concrete, but it is different. This depends not only on the mix proportion, but on the awareness and skill of the builder.

NOTES:

PART 4: RURAL BUILDING PRODUCTS

REINFORCEMENT STEEL

To reinforce a material means to add something to it, in order to make it stronger.

One of the strongest reinforcement materials available is steel or iron. In reinforced concrete, a concrete member is strengthened with steel bars or metal netting embedded in it.

TYPES OF REINFORCEMENT STEEL

There are various types of reinforcement steel; how they are used depends on the function, shape and dimensions of the reinforced concrete member as well as on the required strength.

Reinforcement steel is classified according to its shape and surface texture. The most common reinforcement is single round bars which can have either a smooth or a ribbed surface.

- CIRCULAR BARS: Round, smooth bars are called circular bars and are available in diameters ranging from 5 mm to 28 mm (Fig. 1, next page). The four sizes most often used in Rural Building have diameters of 6 mm (1/4"), 10 mm (3/8"), 12 mm (1/2") and 18 mm (3/4").

- RIBBED BARS: The round bars with a ribbed surface are called ribbed bars and are available in diameters ranging from 6 mm to 40 mm, if the bar is cross-ribbed (Fig. 2, next page). For obliquely ribbed bars, the diameters range from 6 mm to 28 mm (Fig. 3, next page). This last type of reinforcement is also called "tentor bar" and it is the strongest reinforcement steel available.

The standard length of reinforcement bars is 9 m.

- ADVANTAGES / DISADVANTAGES: Although the strength of circular bars is sufficient for all Rural Building purposes, it is advisable to purchase ribbed bars if they are available in the market. Ribbed bars are preferred because their rough surface texture provides a better grip to the concrete. This, along with their greater strength, allows the Rural Builder to space the ribbed bars wider apart, thus saving materials and reducing the total weight of the member.

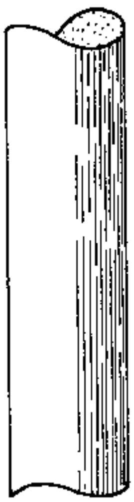

Fig. 1

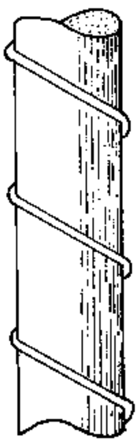

Fig. 2

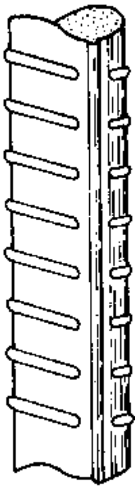

Fig. 3

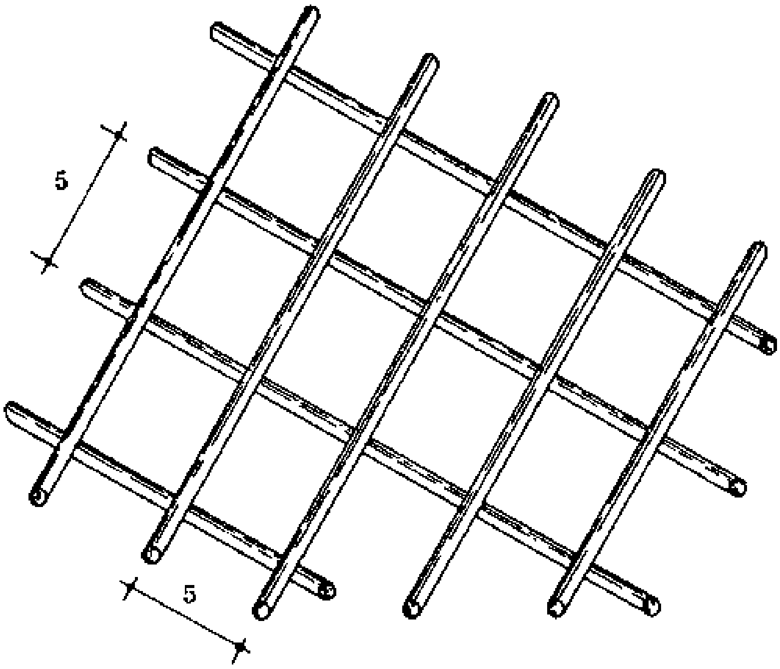

Fig. 4

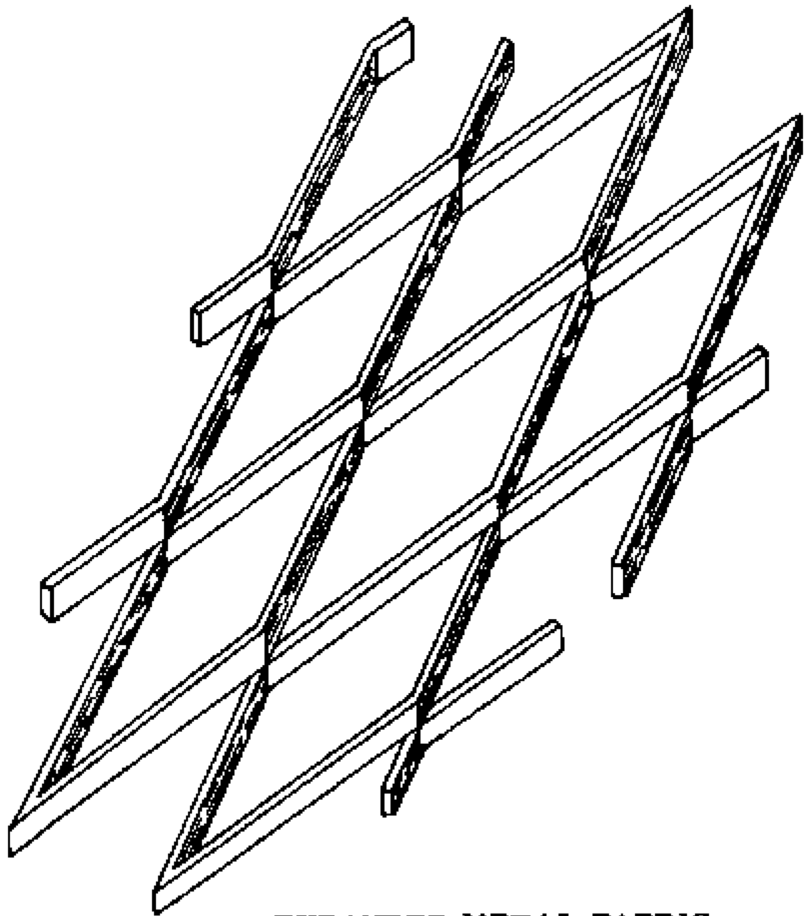

Fig. 5

REINFORCEMENT MATS

A variety of reinforcement mats are available. They are usually made out of two layers of reinforcement bars laid across each other and secured together by welding.

The mats are either square or oblong in shape. They reduce the work needed to reinforce large members of the structure such as floors, walls, slabs, etc.

Regular reinforcement mats are hardly necessary in Rural Building, but two special kinds are frequently used for burglar proofing and to reinforce thin concrete slabs like manhole covers, draining boards in kitchens, and coping slabs.

These two are "expanded metal fabric" and "steel wire netting".

- STEEL WIRE NETTING: The most common steel wire netting (Fig. 4) has square meshes measuring 5 by 5 cm and is manufactured in the same way as reinforcement mats. The same kind of wire mesh can also have oblong meshes.

- EXPANDED METAL FABRIC: This is made by slitting metal sheets and then stretching them to form a diamond-shaped mesh (Fig. 5). Always wear leather gloves when working with expanded metal fabric, as the edges are very sharp.

Reinforcement mats are sold in sheets approximately 2,15 m wide and 5 m long.

Expanded metal fabric and steel wire netting can be purchased in sheets of about 1,5 m wide and 2,5 m long.

BINDING WIRE

This is a soft steel wire about 1 mm in diameter, used for binding reinforcement bars at the points where they cross each other. It is bought in rolls and may also be called lashing wire, annealed wire or tying wire.

NOTES:

LANDCRETE BLOCKS

One of the smallest but most important members of the structure is the block. Almost all walls in Rural Building are erected with blocks, preferable landcrete blocks.

-LANDCRETE: This word comes from the words laterite, land, and concrete.

The land on which we live provides us with the laterite; the first syllable is a combination of the first two letters of laterite and the last two letters of land.

Concrete as well as landcrete contains cement. In order to show this, the last syllable of the word concrete is used, making the word LANDCRETE.

Landcrete is a low cost, long-lasting and attractive building product. This chapter is about making landcrete blocks using a hand operated block press.

- LATERITE: This type of soil is found throughout the tropics. Its colour can vary from white-grey to a dark red, depending on the iron content. Laterite consists mainly of fine and coarse sand mixed with clay.

Laterite has been used to make houses for a long time, but such walls break down easily and get washed away by rain. Pressing the soil into blocks makes it easier to build the walls, and they are stronger and more resistant to rain. By adding some cement to the laterite it is stabilized and makes even better blocks. The basic material, laterite, costs nothing and is usually found on the building site. It is easy to find good soil for building or to mix it with sand or clay to make it good.

The basic steps of the operation to make landcrete blocks are fairly simple: first good soil is found and tested; then it is prepared for the block press, with the addition of cement or lime if available. The soil or soil-cement is put into the press and compacted, raised out and removed for curing.

- NOTE: If the blocks do not contain cement they are not called landcrete; they are simply called "laterite blocks".

REQUIRED MATERIALS

a - Laterite soil: composed of sands, silt and clay
b - Water: to wet the soil; it should be clean
c - Cement: to stabilize the soil.

- NOTE: If you have no cement you can use lime (twice as much as the amount of cement recommended) or else just make plain laterite blocks.

REQUIRED EQUIPMENT

a - Block press with proper mounting rails and a wooden handle (2,5 m long)
b - Box for shrinkage test
c - Headpan, box or bucket for batching
d - Pick-axes and shovels for digging, mixing and filling.

TESTING AND CHOOSING THE SOIL

Most soil is suitable for making blocks, but it must be tested first to find out how much sand, silt and clay it contains.

Dig a small pit for testing. First remove and set aside the top soil where plants or grass may be growing (25 to 50 cm deep). This soil should not be used for blocks. Dig out the soil under the top soil. The deeper soil may be sandier, which is usually better for making blocks.

Now make three tests: a - Drop test b- Jar test c - Box test.

- DROP TEST: Take a handful of soil which is wet enough to form a ball, and squeeze it in your hand, but not so tightly that the water is squeezed out.

Drop the ball from about one meter high onto hard ground. If it breaks up into only a few pieces, the block-making quality is good. If it breaks completely up, there is either not enough water in it or not enough clay, and the quality is bad.

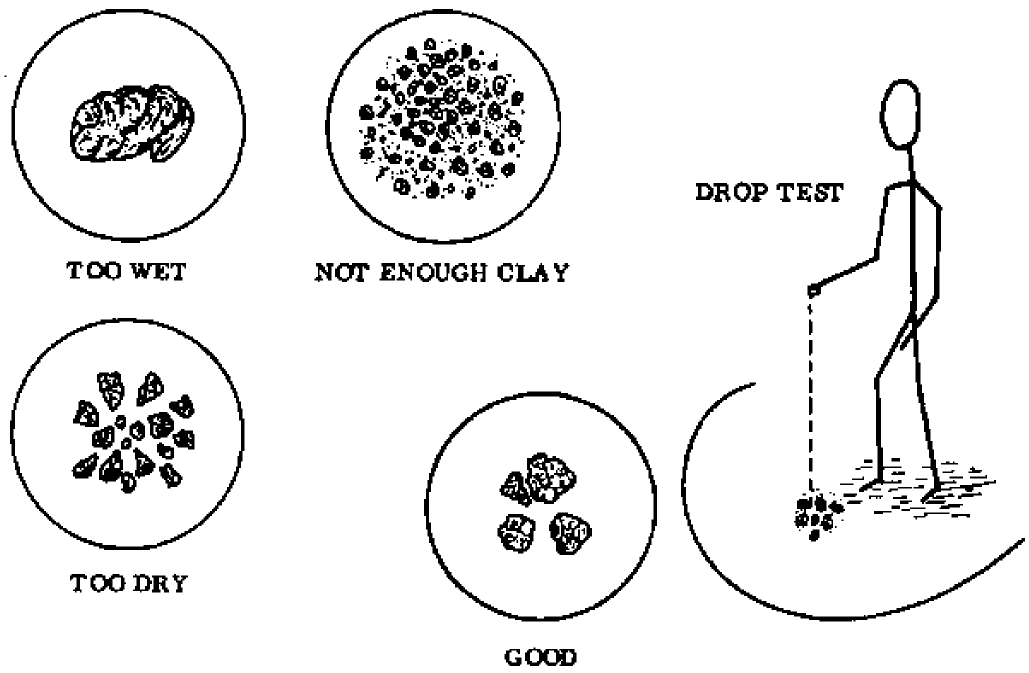

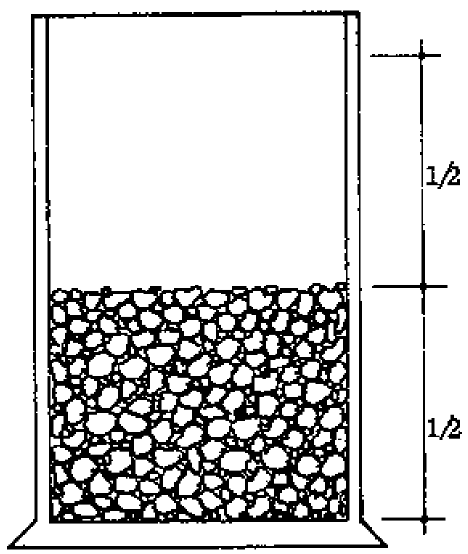

FILL GLASS JAR HALF FULL WITH LATERITE SOIL

Fig. 1

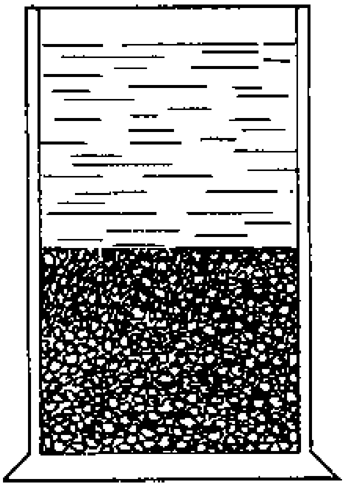

Fig. 2

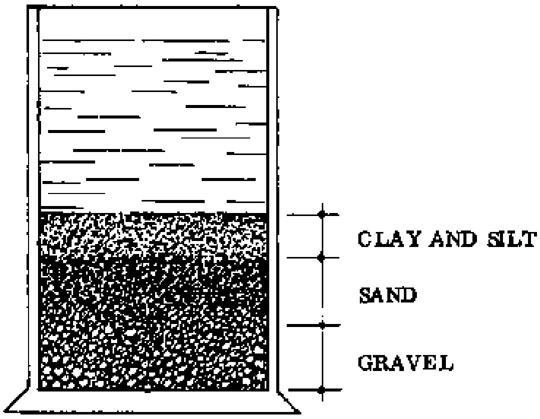

Fig. 3

- JAR TEST: This test separates the sand from the clay and silt, so that we can measure the quantity of each.

First dig out some soil (not top soil). Fill a glass jar half-full with the soil (Fig. 1).

Fill the jar up with water and add two teaspoons full of salt, to make the particles settle faster (Fig. 2).

Cover and shake or stir the jar for two minutes to mix the water thoroughly with the soil.

Set the jar on a level surface and leave the soil to settle for several hours. Sand and gravel will settle to the bottom, leaving the silt and clay on top (Fig. 3).

Measure the height of each layer to find the total amount of sand and the amount of clay and silt, compared to the total amount of soil.

The soil you use should contain at least 30% sand (about 1/3), and between 5% and 30% clay and silt. If there is not enough clay add more or else find some better soil. You can also add sand if necessary.

NOTES:

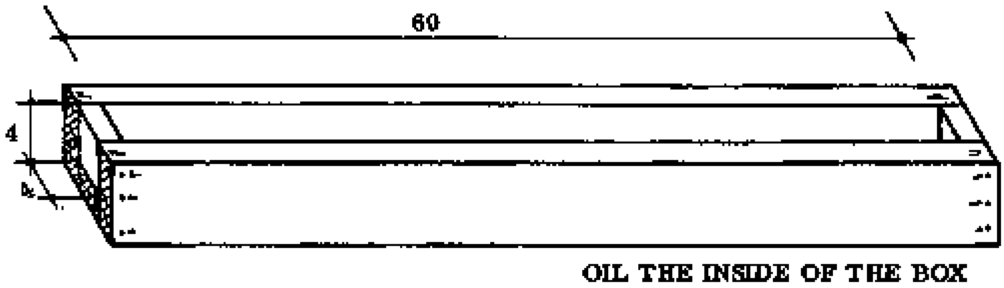

Fig. 1

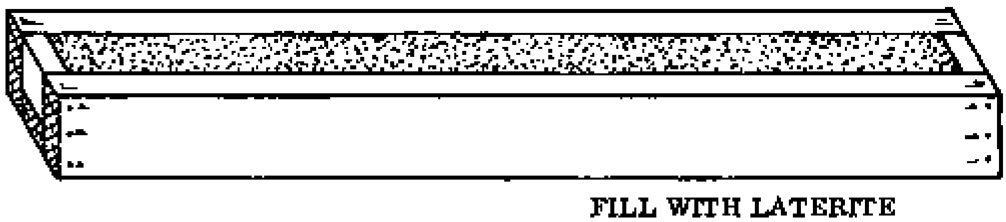

Fig. 2

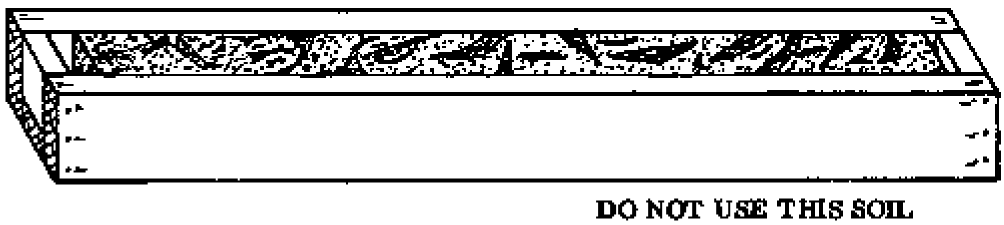

Fig. 3

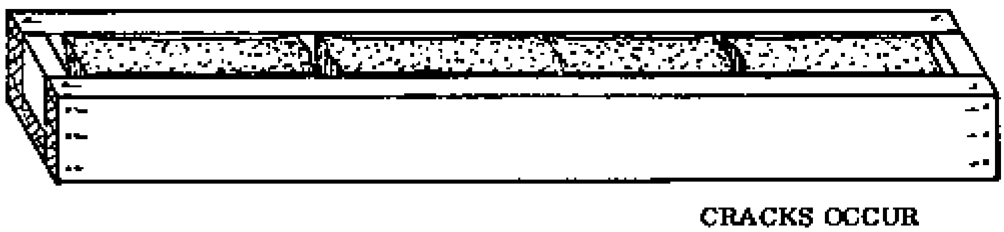

Fig. 4

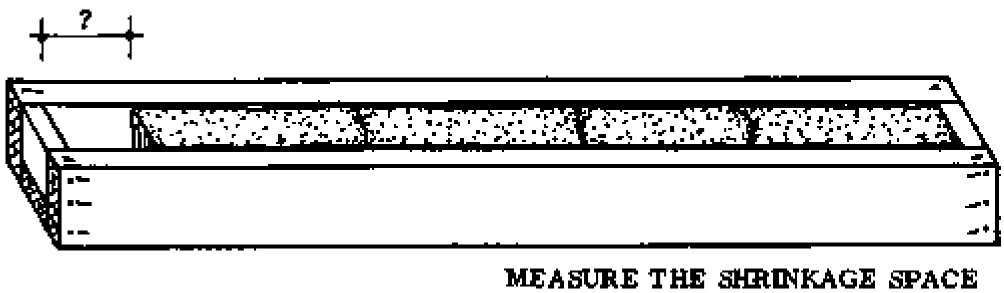

Fig. 5

- BOX TEST: This test shows the quality of the soil and allows you to determine the amount of cement you should use with it.

Use an open wooden box with inside measurements of 60 cm by 4 cm by 4 cm (Fig. 1). Oil or grease the inside of the box.

Fill the box with very wet soil. Compact it well, especially in the corners, and level off the top with a stick or the edge of your trowel (Fig. 2).

Put the box in the sun for three days to dry, or in the shade for seven days. It should be protected from rain.

The soil will shrink as it dries. Do not use soil for blocks if it has many cracks in it (Fig. 3) or if it has arched up out of the box. Don't use soil if it has shrunk more than 5 cm. Either find some better soil, or improve the soil by adding sand, since it is the clay which causes shrinkage.

Measure the shrinkage by tapping one end of the box on the ground so that all the soil slides down to one end (Fig. 4). The cracks will close and you can measure the shrinkage space at the top end (Fig. 5).

The amount of shrinkage tells you how much cement you should use. The more shrinkage, the more cement is needed. Use the table below as a guide for the amount of cement to be added to the laterite.

- TEST TABLE:

Shrinkage	Cement to soil
0-10 mm	1: 35
10-20 mm	1: 30
20 - 30 mm	1: 25
30 - 40 mm	1: 20
40 - 50 mm	1: 15

NOTES:

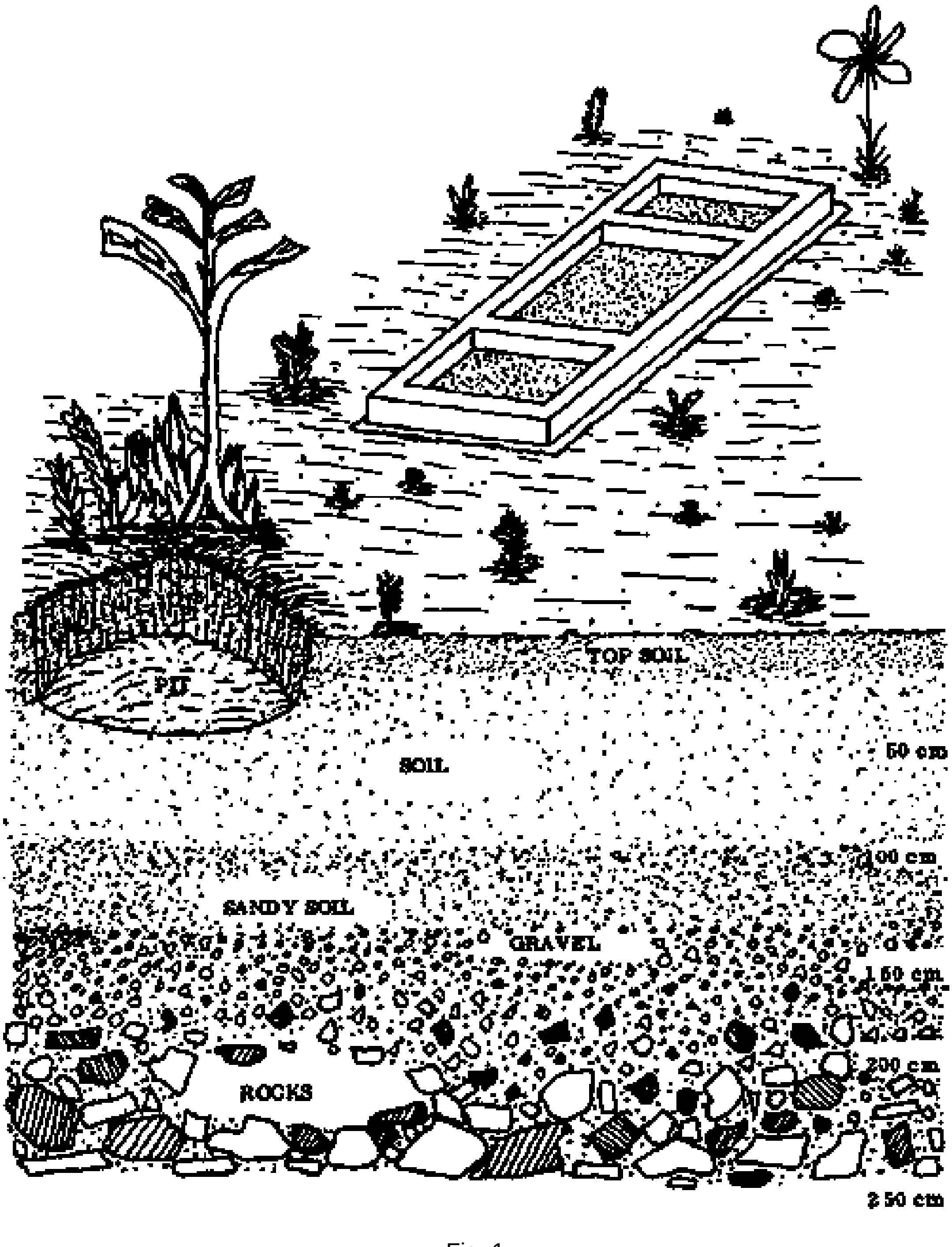
TOP SOIL
PIT
SOIL
50 cm
100 cm
SANDY SOIL
GRAVEL
150 cm
200 cm
ROCKS
250 cm

Fig. 1

MAKING BLOCKS

- PREPARATION OF THE MIXTURE: After you have found good soil and the correct amount of cement to use with the help of the box test, the soil mixture must be prepared for the block press.

If you have no cement and must make laterite blocks, you follow the same sequence as described below.

a - Remove the top layer of soil (Fig. 1).
b - Dig out the soil you want to use and pile it (Fig. 1).
c - Measure the required proportions of laterite and cement.
d - Make a dry mix of the batch.
e - Add water and make a wet mix.
f - Check the moisture content using the drop test.

If you are making laterite blocks, steps c and d are of course left out.

Before you start batching, the laterite must be broken up so that no lumps remain. This is usually done by beating the soil with the back of a shovel or with a piece of wood. Large stones are removed.

- MIXING: Use flat, hard ground for mixing. If no such place is available, prepare a mixing platform before you start working.

Spread the laterite out until it is about 10 cm thick. Spread the cement evenly over all the soil. Mix the cement and soil with a shovel until the mixture is of an even colour throughout (about 3 times - see Rural Building Materials, page 163).

Spread the heap again, sprinkle a little water over it and mix. At this point, test the mixture for moisture with the drop test. If it is too dry, spread it out again and add more water.

The soil-cement mixture is now ready for the block press. There should be enough mix for about 7 or 8 blocks in one batch at a time.

- NOTE: Never prepare more than you can use up within 30 minutes (about three batches). It is better to mix small amounts more often.

NOTES:

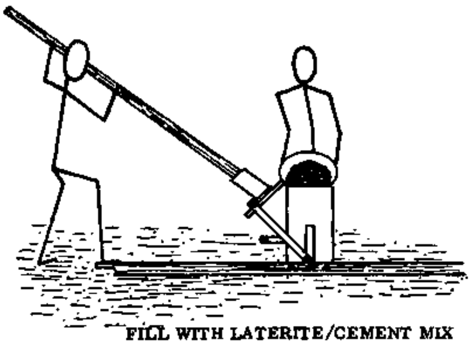

Fig. 1

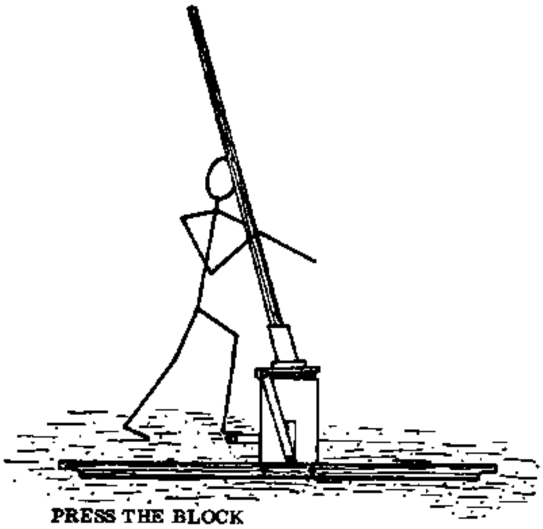

Fig. 2

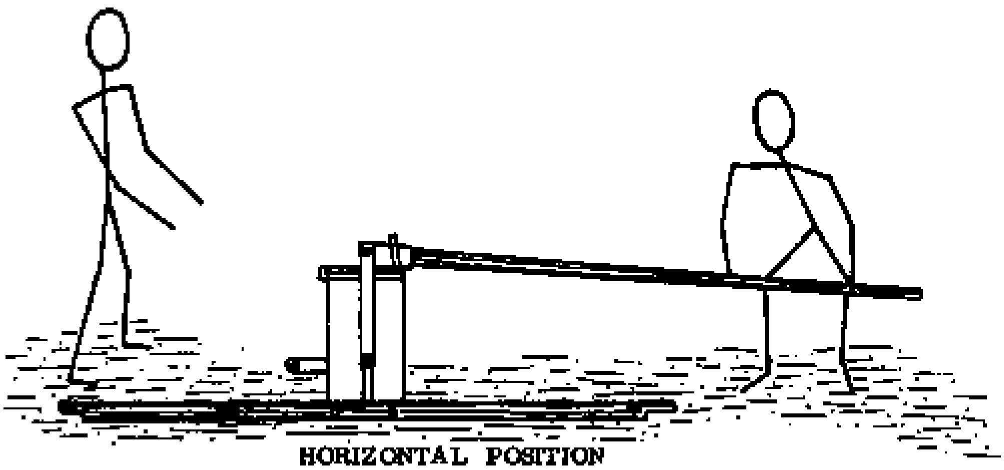

Fig. 3

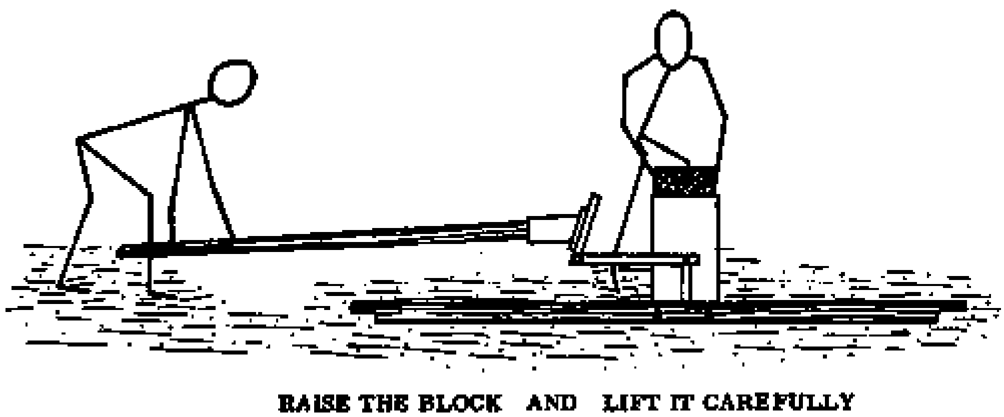

Fig. 4

- PRESSING THE BLOCK:

a - Place the block press in its rails on flat, solid ground near the mixing platform.

b - Open the mould box by swinging the handle down to the lower roller.

c - Half-fill the mould box with the laterite cement mix (Fig. 1).

d - Press the mix firmly into the corners with a piece of wood.

e - Fill the mould to the top and compact the corners again.

f - Add a little more so that the mould is filled flush to its top edge.

g - Swing the handle quickly over to the other side and press the block until the handle has reached a horizontal position (Figs. 2 & 3).

If the mix is too dry, the handle will not go all the way down to the horizontal position. In this case do not force it, as the handle may break.

Instead, eject the unfinished block so that you can refill the mould box after adding a little water to the mix.

On no account should more than one man at a time work the handle!

h - Raise the block out of the mould box by swinging the handle back against the lower rollers (Fig. 4).

i - Lift the block carefully off the machine and place it for drying.

The freshly made block is not strong yet. If it breaks or cracks very easily, the mixture is not correct. Try a different mixture.

Hold the block in such a way that your fingers are not caught under it when you put it down, so as not to crumble the edges.

NOTES:

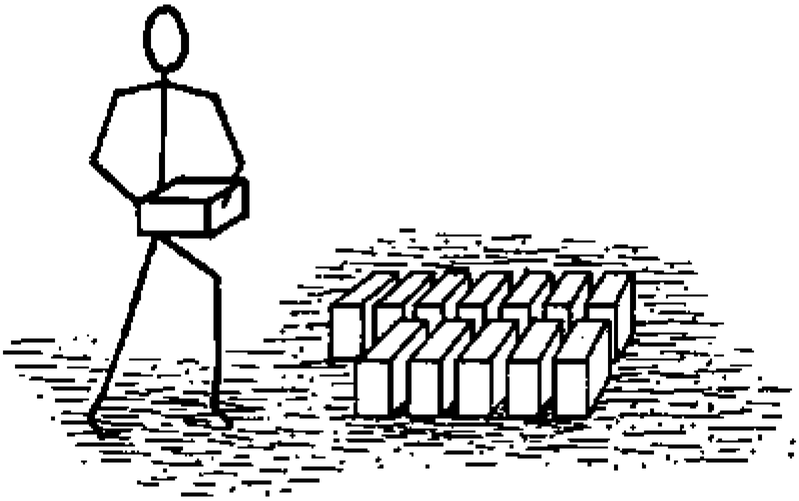

Fig. 1: DRYING FOR ONE DAY

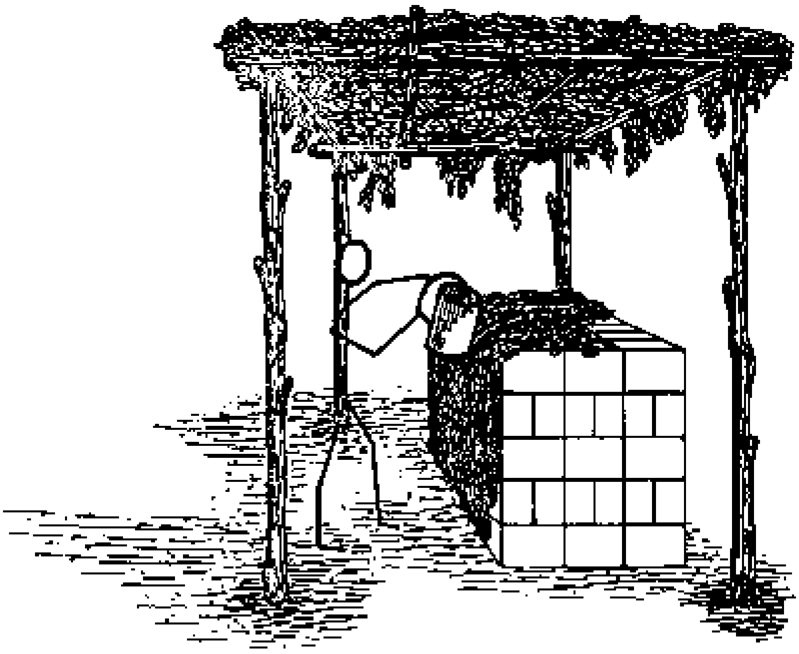

Fig. 2: STACKING FOR FURTHER CURING

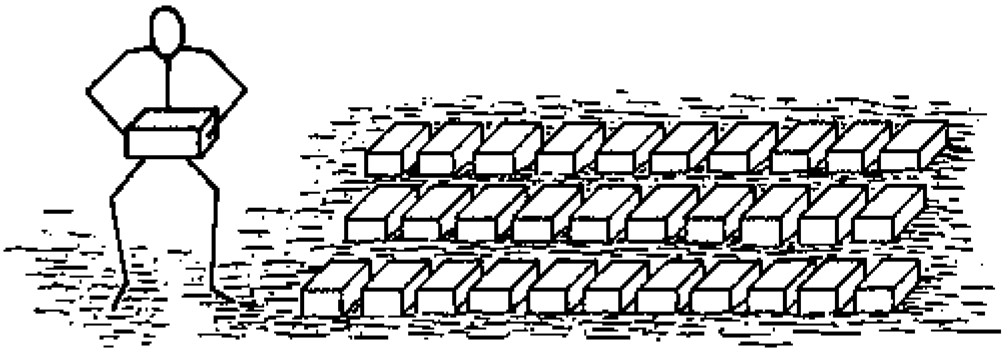

Fig. 3: BLOCKS WITHOUT CEMENT - SUN DRYING

- CURING: This is the term originally used to describe the chemical change in glues when they set, meaning when they become strong and hard.

As far as cement products are concerned, curing simply means the after-treatment of any of those products.

If the blocks contain cement, we talk about "curing". If the blocks don't contain cement, we talk about "sun-drying".

The blocks with cement must now be cured for about two weeks while the cement sets. It is important to follow the directions for curing. If you do not, the blocks may be weak and full of cracks, and therefore unusable for building.

a - Remove the block from the block press, holding it carefully.

b - Place it on leaves, grass or boards on flat ground. The block should not touch the ground (Fig. 1).

c - The blocks should be under shelter or covered with something so that they are out of the rain and sun for at least the first day.

d - Let the blocks dry like this for one day.

e - After one day the blocks are a little stronger so that they can be stacked for further curing.

Stack the blocks on boards or on very flat, hard ground up to five blocks high. Place them so that they touch each other. Make the stacks under a cover if possible, to keep them out of the sun (Fig. 2).

f - The blocks must be kept moist by sprinkling water on them twice a day. Put grass or leaves on top to help keep them moist (Fig. 2).

g - After two weeks of watering the cement has set properly and the blocks can dry completely. They are now ready for use.

Blocks without cement simply need to be dried in the sun. Let the blocks dry in the sun for two weeks; then they are ready for building (Fig. 3).

NOTES:

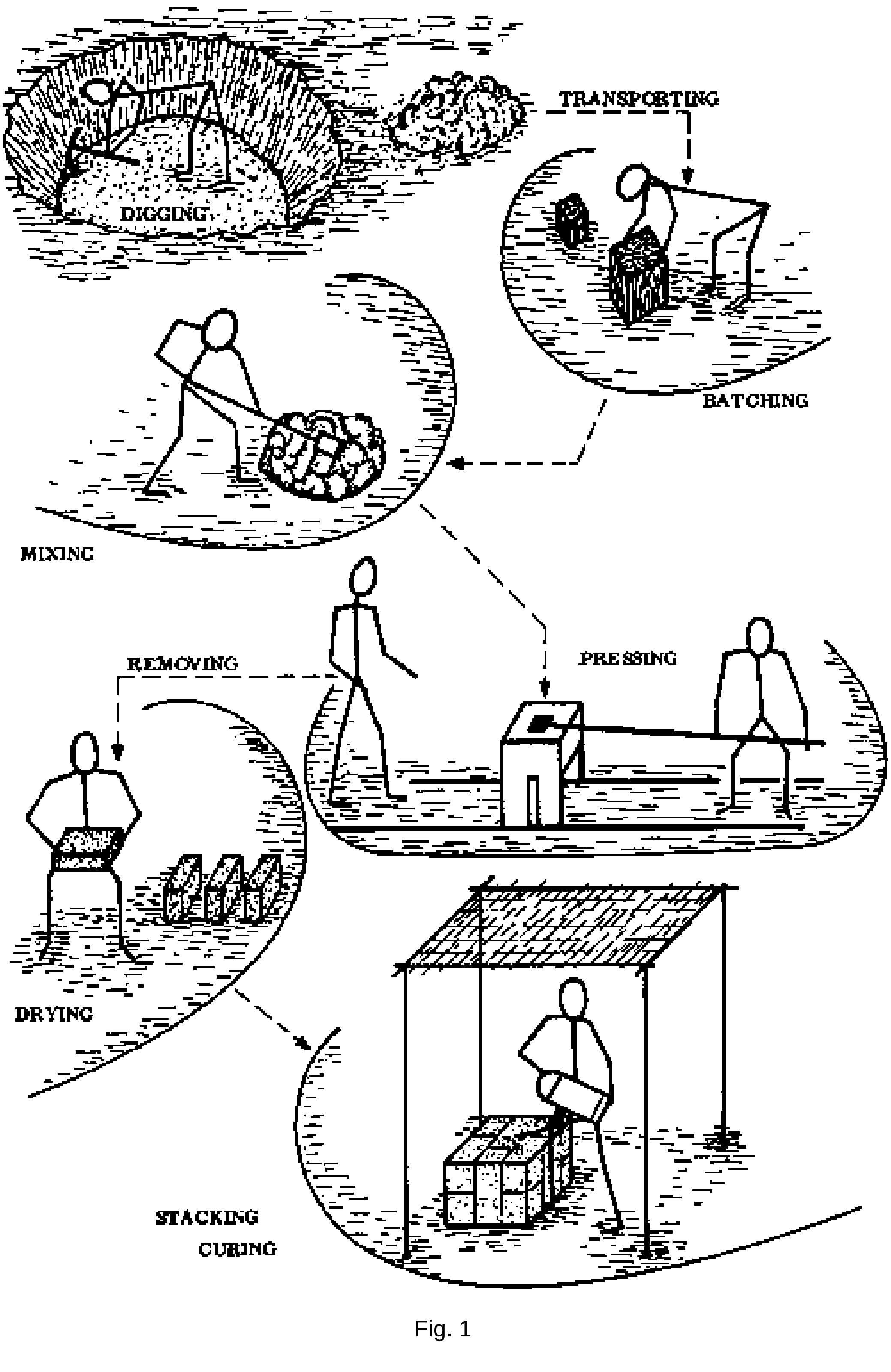
TRANSPORTING
DIGGING
BATCHING
MIXING
REMOVING
PRESSING
DRYING
STACKING
CURING

Fig. 1

PLANNING THE WORK

- PLAN OF OPERATIONS: Good planning can make the work of block-making go faster and easier.

The places where the different steps are carried out should be as close to each other as possible, so that there is a continuous step by step flow of laterite from the soil pit to the finished wall. The soil and blocks should be transported as little as possible.

If there is more than one building to erect, some operations can be moved.

There should be a smooth flow (Fig. 1) of:

a - digging
b - transporting
c - batching
d - mixing
e - testing
f - filling
g - pressing
h - raising
i - removing/drying
j - stacking/curing
k - walling up

You can make a layout like the one in the picture (Fig. 1) or you can lay out the operations in a straight line; or anything in between, whatever suits you and the situation best.

Several factors can be important in deciding what sort of digging pits you will have. If the good soil goes deep, all the soil can come from one pit. However such a large pit might be ugly and undesirable; several small pits could be a better solution in some cases.

The possible future uses of the pits should also be considered. They could form a part of a drainage system, a water storage tank, a sewage pit, a soak-away, and so on. This of course, provided that the planning is done beforehand.

NOTES:

<table>
<tr><th colspan="7">NUMBER OF MEN</th><th>KIND OF ACTIVITY</th></tr>
<tr><td rowspan="8">ONE MAN ONLY</td><td rowspan="5">1</td><td rowspan="2">1</td><td rowspan="2">2</td><td>2</td><td>3</td><td>4</td><td>DIGGING</td></tr>
<tr><td>2</td><td>2</td><td>3</td><td>TRANSPORTING</td></tr>
<tr><td rowspan="3">1</td><td rowspan="3">2</td><td rowspan="2">2</td><td rowspan="2">2</td><td>1</td><td>BATCHING AND TESTING</td></tr>
<tr><td>2</td><td>MIXING</td></tr>
<tr><td rowspan="2">1</td><td>1</td><td>1</td><td>FILLING AND OILING</td></tr>
<tr><td rowspan="3">1</td><td rowspan="3">1</td><td rowspan="3">2</td><td rowspan="2">1</td><td>1</td><td>PRESSING</td></tr>
<tr><td rowspan="2">1</td><td>1</td><td>RAISING OUT</td></tr>
<tr><td>1</td><td>2</td><td>REMOVING AND PLACING TO DRY</td></tr>
<tr><td>1</td><td>2</td><td>3</td><td>6</td><td>8</td><td>10</td><td>15</td><td>TOTAL MANPOWER</td></tr>
</table>

Fig. 1

Stacking, curing and transporting the blocks to the actual place of building can be done every morning by the soil diggers.

They can do this only if they have dug some soil in advance during the previous day, so that the rest of the workers have the materials to continue their operations of batching, mixing etc.

- LABOUR: From one to fifteen men can work on block-making. If there are plenty of workers, they should be organized to keep the block press going constantly, so it is used to maximum efficiency.

To do this, there must be a steady supply of soil-cement mix ready to put into the machine. Make the mixing platform big enough so that there is room for one pile of already mixed landcrete and one pile which is being mixed.

You can use the rough table at left as a planning guide to divide the labour, but experience will be the best guide (Fig. 1).

In any case the work should be divided so that everyone is busy all the time. If the block press filling worker has to stop and wait for prepared landcrete, he or another man should be switched to doing soil preparation.

Workers should relieve one another in their jobs every few hours to prevent boredom with the work. After a few days of such rotations, the workers will each become skilled and efficient at three or four of the different steps of block-making.

It is important to share the work fairly to keep up the morale and enthusiasm among the workers.

- NUMBER OF BLOCKS: You should know from the start approximately the number of blocks that will be needed for the building. This is necessary to be able to schedule the block-making, curing and building.

To find the approximate number of blocks to be made, you must know the size and plan of the building. Take measurements of the lengths of the walls and add these up to get a total. Multiply this wall-length by the total height from the plinth course to the top of the wall; this gives you the total wall area in square meters. This number, multiplied by 13, 5 (the approximate number of blocks per square meter) gives you the total number of blocks to be made.

- REMEMBER: Wall area in square meters × 13,5 = Number of blocks. (Also, see the Tables of Figures, pages 237 and 238).

NOTES:

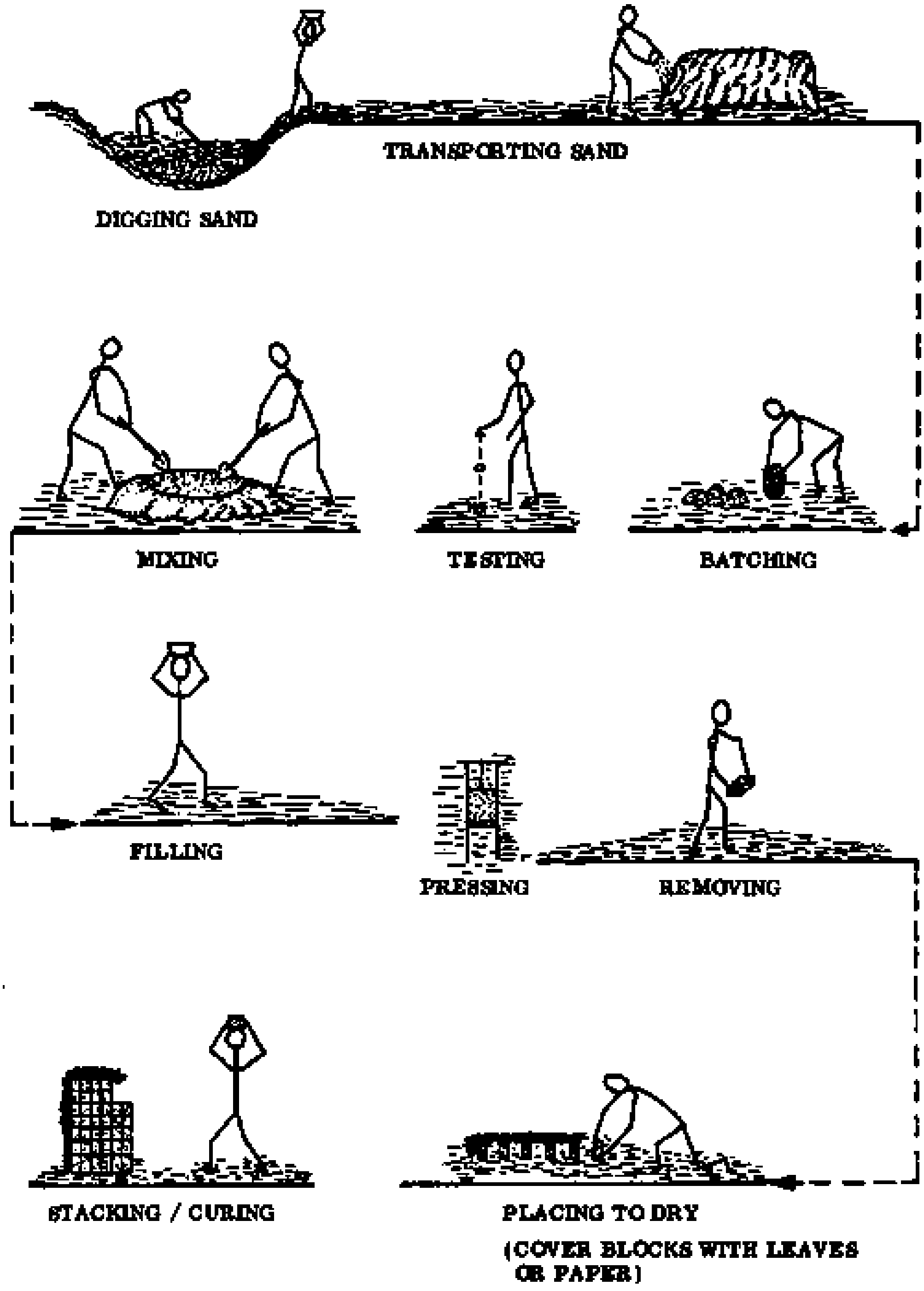
TRANSPORTING SAND
DIGGING SAND
MIXING
TESTING
BATCHING
FILLING
PRESSING
REMOVING
STACKING / CURING
PLACING TO DRY
(COVER BLOCKS WITH LEAVES OR PAPER)

Fig. 1

SANDCRETE BLOCKS

The term sandcrete comes from "concrete" by replacing the first syllable "con" with the word "sand". This is done to make it clear that this building product contains only sand as an aggregate, and no stones. It can also be called "fine-grained concrete" but the new term sandcrete is preferred as it corresponds to landcrete.

A pallet is put into the mould box of the machine (see page 29) and the box is filled with a mixture of cement and sand; then the lid of the machine is used to compact the material to the required size (for proportions of the mix, see the Tables of Figures, page 234).

Unlike landcrete blocks, sandcrete blocks have to be made upon a pallet, as they are too soft to be carried when freshly made. Differently shaped blocks can be made with this machine by changing the height of the pallet or by using inserts.

MAKING THE BLOCKS

Making blocks with this machine is similar to making landcrete blocks.

a. Put one or more pallets into the mould box, according to how thick you want the blocks.

b. Half-fill the mould box with the ready mixed sandcrete.

c. Compact the corners with a piece of wood.

d. Fill the mould box completely and again compact the corners. Add a little more if necessary to fill the box flush to the top edge.

e. Compact the sandcrete by repeatedly banging the heavy lid on it, until the lid fits exactly in its lowest position. Sometimes the lid does not close properly because the mould box is too full. In this case, scrape off a small amount of sandcrete with your trowel and repeat the compaction. If you fail to do this the block will be wedge-shaped and difficult to set in the wall.

f. Open the lid wide and pull the handle to push the block out.

g. Remove both pallet and block at the same time and set them in place for hardening and curing.

- NOTE: Before use, the pallets must be soaked in water thoroughly, to prevent them from bending during the drying process. If this is not done the pallets will probably bend and crack the blocks.

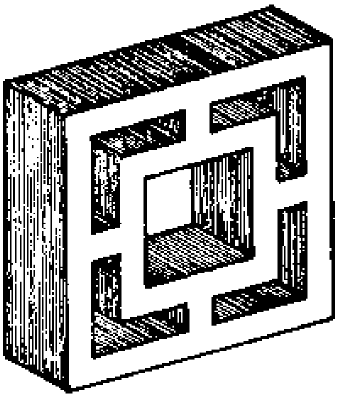

Fig. 1

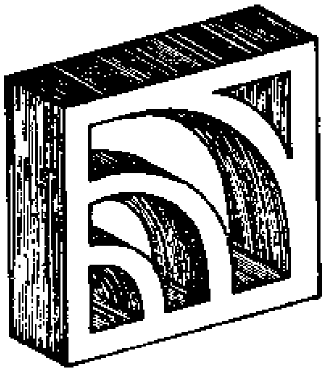

Fig. 2

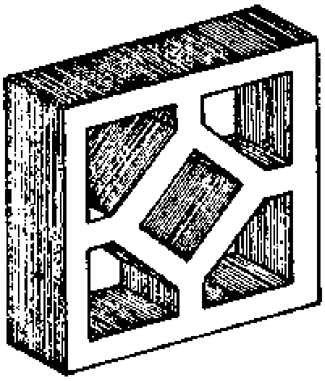

Fig. 3

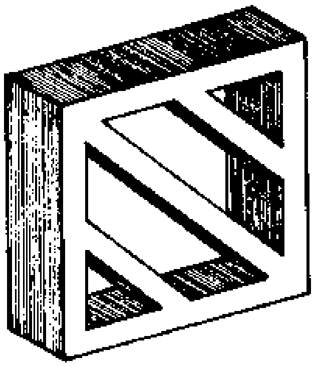

Fig. 4

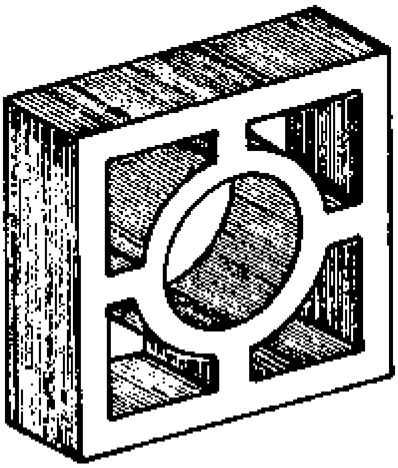

Fig. 5

PLANNING THE WORK

As in the plan of operations for making landcrete blocks (page 187), for sandcrete blocks also the speed and ease of the work depend on how well it is planned.

Fig. 1 on page 190 shows how the block-making can be planned.

DECORATIVE BLOCKS

Originally, a decorative block was understood to be a solid block with decorative textured faces. What we now commonly call decorative block is in fact part of a decorative openwork screen built into an opening. The correct term is "decorative grille" (also spelled "grill").

This kind of block is made in a special iron mould. It can serve several purposes:

- To give an attractive appearance

- To provide light without installing burglar-proofing or any kind of louvres, shutters, etc.

- To provide permanent ventilation without using ventilation blocks

- Or a combination of two or three of the above requirements.

The illustrations of blocks on the opposite page show that almost any design is possible, given a fertile imagination. Remember however that the strength of the blocks depends also on their shape (Figs. 1 to 5).

- NOTE: To make it easier to empty the mould, short pins can be welded onto each corner at the top of the mould. This allows you to tap the pins gently on a hard, level surface; thus loosening the block from the mould (Fig. 6).

Drilling small holes into the bottom of the mould can also make it easier to remove the block. The holes allow air into the mould as the block comes out.

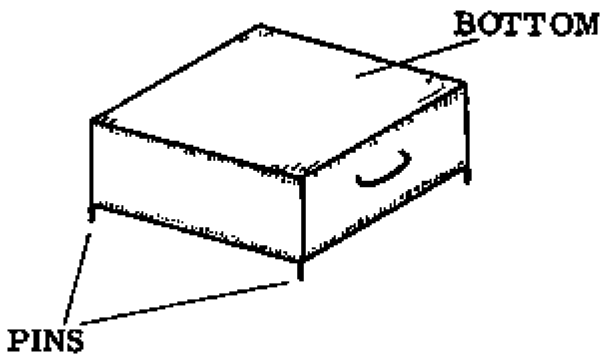

Fig. 6

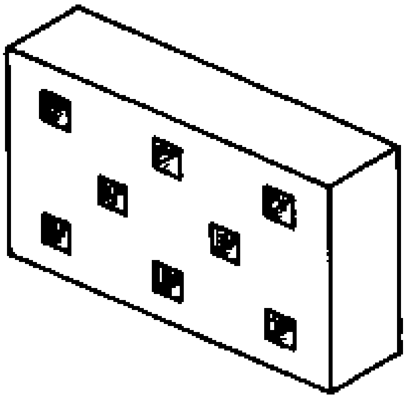

Fig. 1

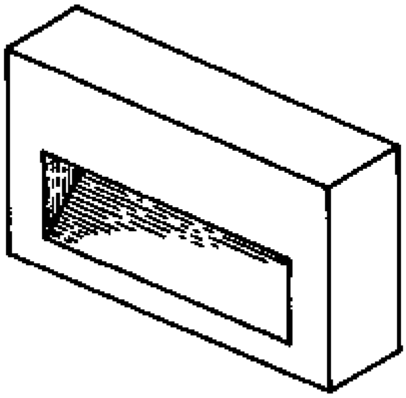

Fig. 2

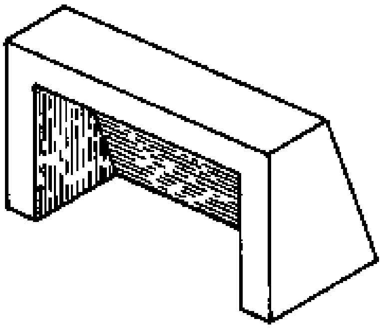

Fig. 3

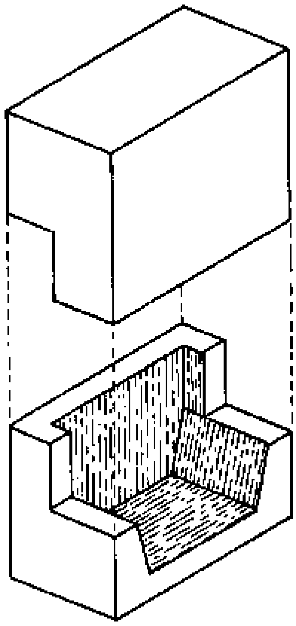

Fig. 4

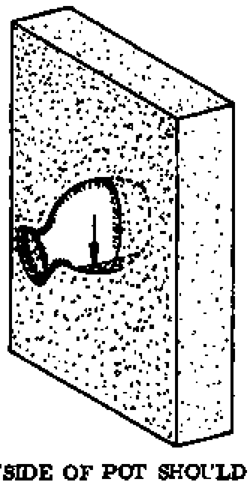

Fig. 5

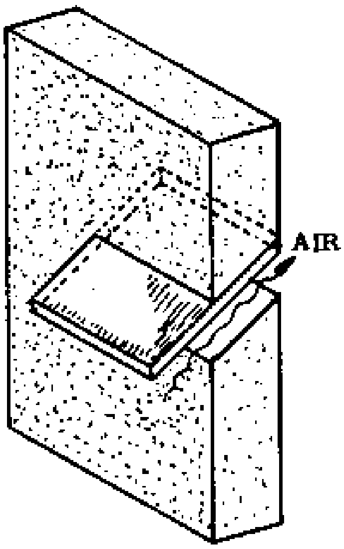

Fig. 6

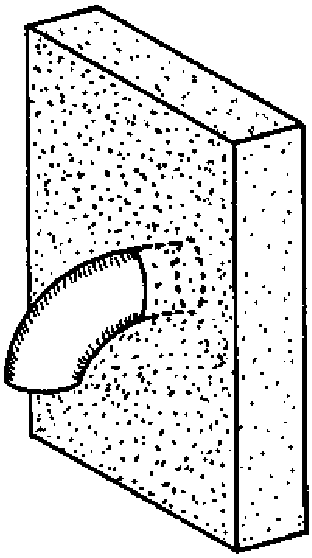

Fig. 7

VENTILATING BLOCKS

These are blocks which have an opening (or several openings) in them. They are used to ventilate rooms, stores, the spaces above ceilings etc.

There are various types of ventilating blocks. Some are designed to keep out rain, others include mosquito-proofing or a decorative front face (Figs. 1, 2 & 3).

In cases where a maximum amount of ventilation is desired, it is advisable to make a ventilating unit which is constructed out of two identical halves (Fig. 4). The inside of this unit can be painted in a bright colour, to increase the amount of light inside the room.

Simply shaped blocks for ventilation can be made in the sandcrete block machine by inserting wooden blocks according to the desired shape.

More complicated designs usually require a specially made wooden mould. The advantage of this kind of mould is that any size and shape of block can be made.

Pre-cast sandcrete or concrete are not the only choices of materials for ventilating units. Local potters' skills in baking earthenware can be used and one can design ventilating units from clay. Existing clay shapes can be used, such as tiles and pots (Figs. 5 & 6) or new shapes can be invented (Fig. 7).

When designing these ventilating units keep in mind the direction of the driving rain. Make sure that the inside of the unit is higher than the outside, and that there is no place for water to become trapped inside the unit to make a breeding place for mosquitos (Fig. 5).

Apart from the above considerations, there is no limit to the imagination of the Rural Builder in designing different shapes and kinds of ventilating units.

NOTES:

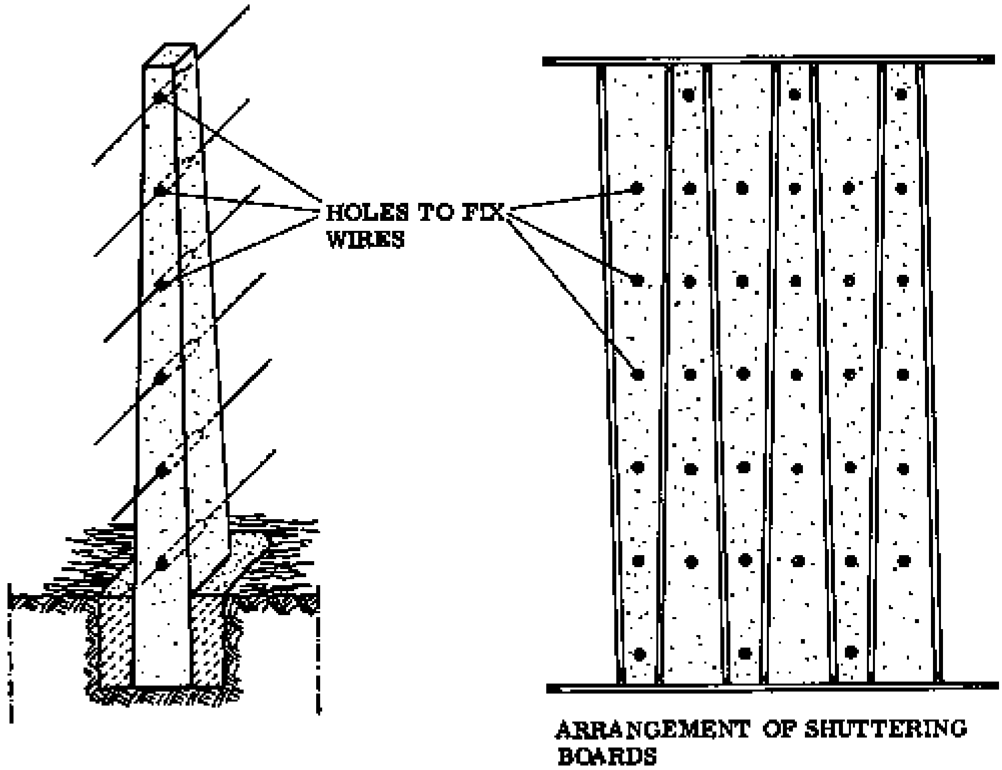
HOLES TO FIX WIRES
ARRANGEMENT OF SHUTTERING BOARDS

Fig. 1

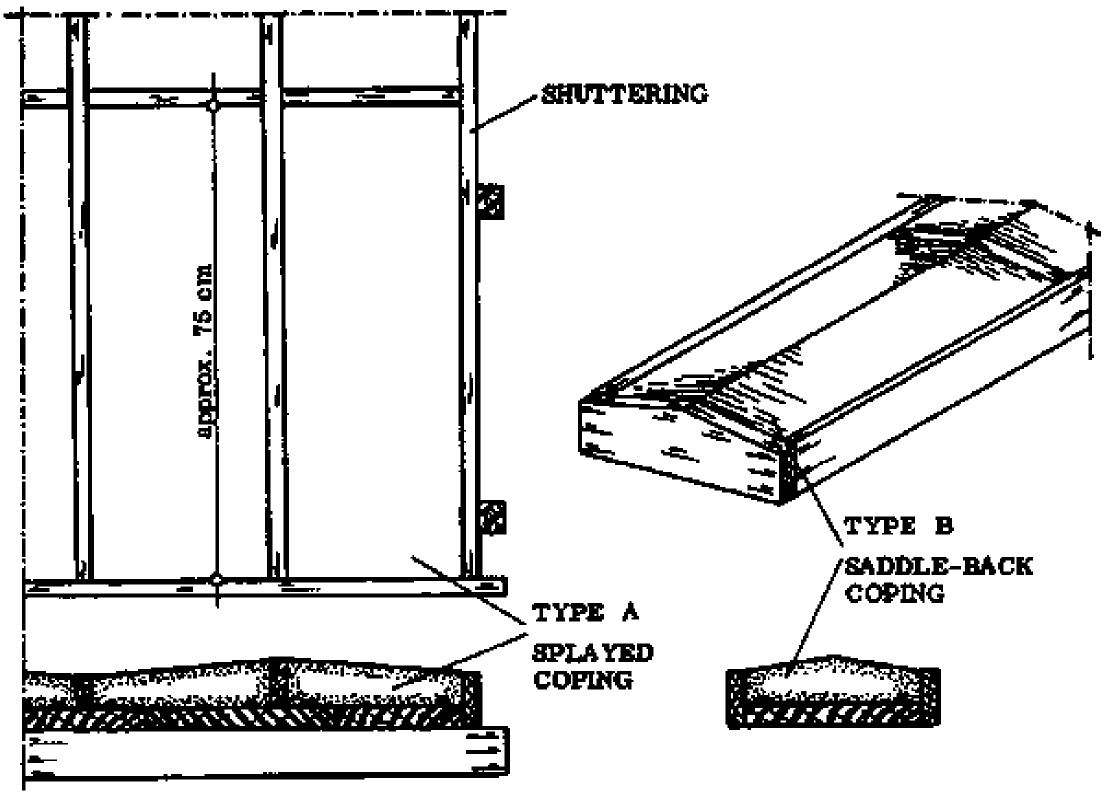
SHUTTERING
approx. 75 cm
TYPE A
SPLAYED COPING
TYPE B
SADDLE-BACK COPING

Fig. 2

PRECAST CONCRETE MEMBERS

Many of the components of a building are prefabricated. This means that they are made in advance at any time and place, and can be used for any building. The most common examples are the various sorts of blocks, plywood, roofing sheets etc.

In the same way, many reinforced concrete members of the structure can be made well in advance so that they are ready to be used as the construction proceeds and they are needed. These are referred to as "precast" members, as opposed to the "cast-in-situ" members.

Generally speaking, prefabricated construction is divided into two classes with regard to buildings:

a - Prefabricated units produced in a factory and transported to the building site
b - Units produced by the contractor in a yard next to the building site.

Since Rural Building is understood to be conventional building and not factory production, the first method does not apply to us.

It is becoming more and more common however for the contractor to prefabricate members near the building site, although the possibilities of this method are limited to small-scale applications.

In Rural Building the most frequently made precast concrete members are:

- REINFORCED CONCRETE LINTELS: These cannot exceed 1,5 m in their length, as otherwise they will be too heavy and impossible to set in place without using a lifting device.

- REINFORCED CONCRETE POSTS: For fencing purposes (Fig. 1).

- REINFORCED CONCRETE PILLARS: These should not be too heavy to be set up under rural conditions.

- CONCRETE COPINGS OR CAPPINGS: These are of various shapes, with or without reinforcement (Fig. 2).

- REINFORCED CONCRETE SLABS: Of limited size and thickness, used to cover manholes or to serve as draining boards in kitchens, etc.

NOTES:

PLANNING THE WORK

All the plans and if possible, detailed drawings must be available before you start to make precast concrete members. Careful planning, supervision and performance are all necessary in order to obtain the desired product.

- SAVING TIME: As soon as the required materials are available, a group of the workers can start production of precast concrete members. The earlier they begin the better, because the concrete needs to be cured for some time before it is used in the building. By the time the precast member, for example a lintel, is needed the curing process will be complete and the lintel can simply be set into place.

In contrast to the cast-in-situ method, this method allows construction to proceed without delays caused by waiting for concrete to harden; and without being hindered by shuttering and strutting. In this way the total construction time is shortened.

This time-saving can become very important, for example if the wet season is approaching and the building has to be done before that time.

- SAVING MATERIALS: Since precast concrete members can simply be made on levelled ground, there is no need for poles and braces or other strutting to hold up the shuttering. Curing is also made much easier.

In addition, the same formwork can be used repeatedly if several members of the same size and shape have to be made.

If there is no proper storage space for the cement on a job, it is better to precast as many members as possible; thereby using up the cement before it gets spoiled.

> - NOTE: The more time, materials and money you save, the happier your client will be. Not only that, but your reputation as a Rural Builder will grow in the eyes of the people around you and be appreciated in the society.

NOTES:

GLUE

Glue is a liquid which is used to stick materials together, particularly on wooden surfaces.

In Ghana's Upper Region, the Rural Builder cannot use glue very often, because of the problems caused by the difference in humidity between the dry and rainy seasons. Glue is sometimes applied to make joints stronger, but it should not be used alone. There must always be some additional fastening; either screws or nails. To rely on joints fastened simply with glue is asking for trouble.

Three points should be kept in mind when you use glue:

a - The parts to be glued have to be in close contact.
b - There must be a large area of contact for glueing.
c - End-grain does not glue well, so a joint which consists mostly of end-grain will be weak.

There are many different glues but in Rural Building we use only two kinds; synthetic glue and contact glue.

- SYNTHETIC GLUE: The most common synthetic glue is PVA (polyvinyl acetate) glue. It is a milk-white glue.

The parts to be glued should be clean and well-fitting. The parts are squeezed together immediately after the glue has been applied, and clamped together until the glue has set hard. The joint will have considerable strength after the glue has set for one hour. PVA glue is not waterproof. If the joint must be waterproof, special kinds of glue have to be used.

- CONTACT GLUE: This glue is used primarily to glue laminated plastics such as Formica or similiar materials to sheet materials.

The glue is spread evenly over both surfaces. A toothed spatula can be used for this purpose. After fifteen minutes the surfaces are pressed together. It is important to take care that the surfaces are exactly in the correct position when they are put together. Once the surfaces stick they cannot be separated again for adjustment.

Take care that no air is trapped between the two surfaces when they are glued, because afterwards it will be impossible to get the air bubbles out.

PROTECTIVE FINISHES

In Rural Building we have the following finishes which are applied on wood or masonry work:

- Oil paint
- Synthetic paint
- White wash
- Cement paint
- PVA Emulsion paint
- Varnish

OIL PAINT

The traditional type of oil paint has a vegetable oil base (linseed oil) and a pigment which gives it colour.

Oil paint is usually applied in three coats. Each coat is of a different composition and they cannot be mixed.

- Priming coat
- Undercoat
- Finishing coat

Follow the directions on the tin when using these paints. Oil paints can be diluted only with thinners, such as turpentine.

SYNTHETIC PAINT

Synthetic paints have a chemical base and a pigment. These paints dry more quickly than oil paints and they are more weather resistant.

Read the directions on the tin before using the paint.

WHITE WASH

White wash is often used for interior work. It is composed of lime and water and it is not water resistant. Its lack of water resistance and its poor wearing qualities make it inferior to emulsion paint as a finish for outside surfaces.

White wash is often used as a priming coat for emulsion paints. It fills in the pores in cement or plaster and makes the surface smoother so that less emulsion paint is needed.

After mixing the lime with water it is advisable to leave the white wash for a day to stand, to be sure that no more chemical reactions are taking place. Follow the manufacturer's directions on the label when mixing the white wash.

CEMENT PAINT

Cement paints are often used externally. They contain white or coloured Portland cement and are sold in powder form. This paint should be made workable with water only; when dry it forms a waterproof seal on the concrete or masonry.

PVA EMULSION PAINT

Polyvinyl acetate emulsion paint has a latex (rubber) base and a pigment for the colouring. This paint is used mostly for internal and external masonry work.

The latex paint can be diluted with water if necessary to improve its workability. The paint should be applied in thin layers and the directions on the label should be followed. Read them before you start work.

VARNISH

Varnishes are used to protect wood. There are two kinds of varnish: oil or spirit. Oil varnish can be used for external work. It is diluted if necessary with turpentine.

Spirit varnish is only used for internal work such as for furniture. This varnish is not very strong or water resistant. Spirit varnish can be diluted with commercial alcohol.

PAINTS AND VARNISHES: PURCHASING

Paints and varnishes are sold in containers of one or more litres. On each container there should be a description of how to apply the paint or varnish. There should also be a date stamped on the container, to indicate how long the paint or varnish will last (when it will be too old to use any longer).

NOTES:

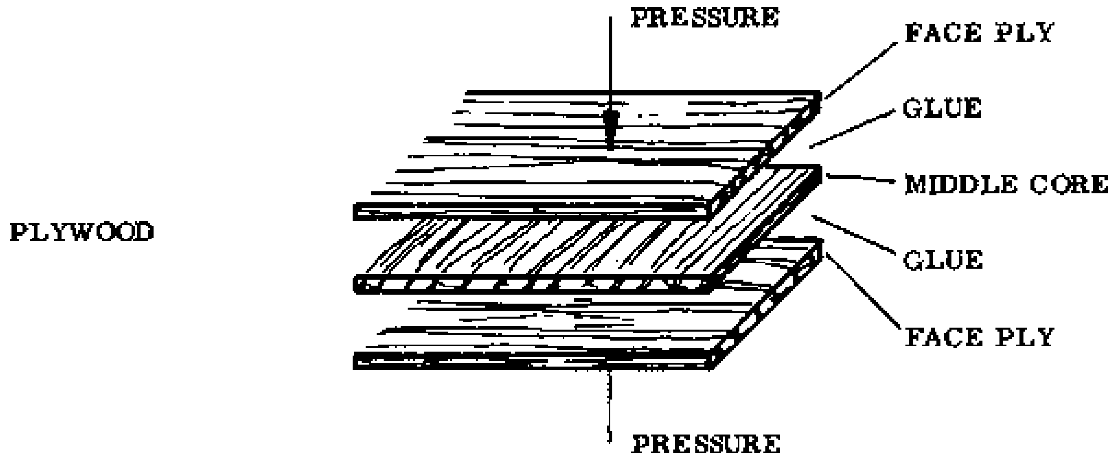

Fig. 1

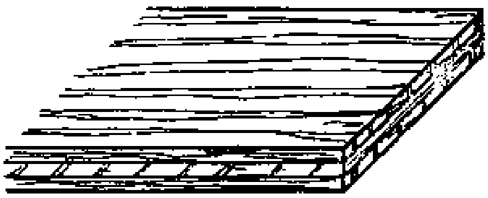

3-PLY-BOARD

Fig. 2

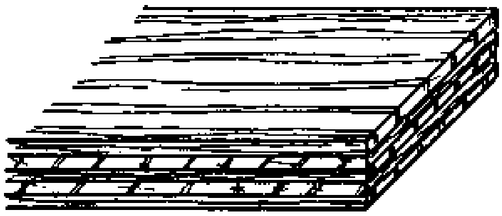

5-PLY-BOARD

Fig. 3

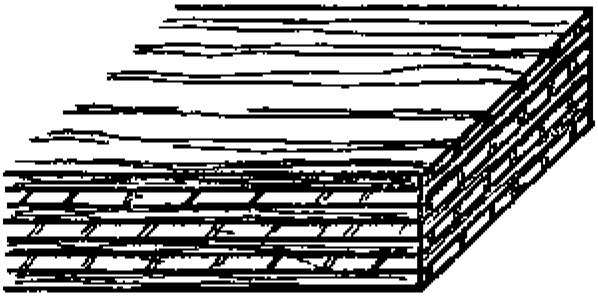

7-PLY-BOARD

Fig. 4

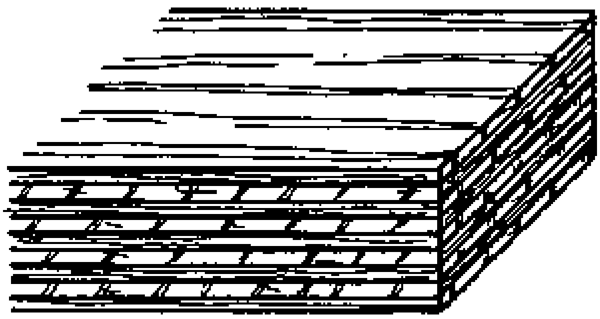

9-PLY-BOARD

Fig. 5

SHEET MATERIALS

Even as new and wonderful materials are becoming available to the Rural Builder, timber is still in very great demand. Wood is easy to work with, adaptable and durable when cared for properly.

Sheet materials manufactured from sawmill wastes are used more and more, both because they save money and because they do not have some of the problems with shrinking or splitting that affect natural materials.

The sheet materials we deal with in Rural Building are: plywood, blockboard, hard board, chip board and decorative laminated plastics.

PLYWOOD

Plywood manufacture is the oldest means of improving the properties of timber. Large sheets can be made, free from defects and unaffected by shrinkage and splitting.

The plywood is made by glueing together several thin layers, called plies or veneers, so that the grains of each run crosswise to its neighbours. There is always an odd number of plies so that the grains of the two outer layers run in the same direction. This is so that the plywood remains flat (Fig. 1).

Plywood is so useful because of its special properties:

- It is stable and will not expand or shrink like solid timber; however it will absorb moisture and may tend to curl as the surface layers expand a bit.

- It is very strong because of the crossed grain structure. Even the thinnest plywood cannot be split.

The number of plies can be from 3 to 9, making sheets which are 3 to 25 mm thick (Figs. 2 to 5).

NOTES:

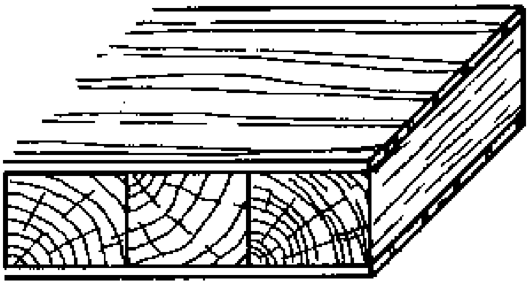

Fig. 1

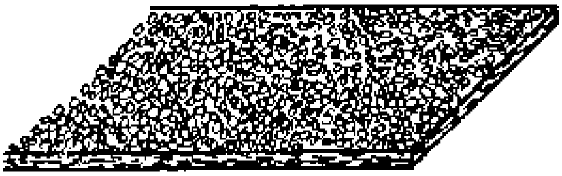

Fig. 2

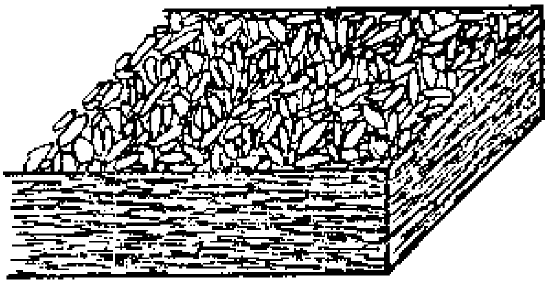

Fig. 3

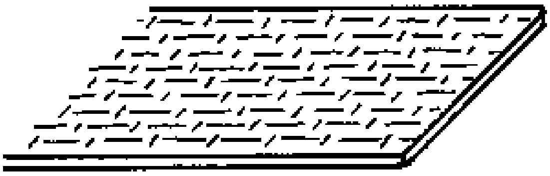

Fig. 4

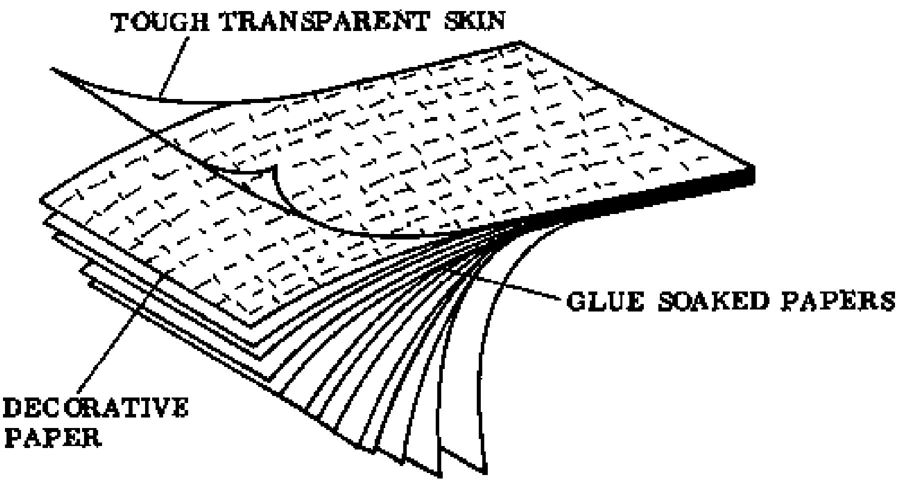

Fig. 5

BLOCK BOARD

This is a variation of plywood. A core of wood strips is glued together and faced with one or more veneers on each side (Fig. 1).

HARD BOARD

Low quality wood and wood wastes are ground and combined with water and glue to form a pulp. This mixture is spread between smooth aluminium sheets under great heat, forming a board. Hard boards have a smooth surface and a coarse side. They are available in thicknesses from 3 to 6 mm (Fig. 2).

CHIP BOARD

This is made from wood chips bonded together with glue. The chips are sorted, dried and mixed with the glue. Then they are spread on a plate and bonded with great heat and pressure. Chip boards are made in thicknesses from 6 to 60 mm (Fig. 3).

The edges of chip boards should always be protected, as they tend to split. This is done by glueing wood strips around the edges.

DECORATIVE LAMINATED PLASTIC

Laminated means consisting of a number of thin layers. Laminated plastics such as Formica (Fig. 4) are made by assembling many paper sheets soaked in glue. A decorative paper, also soaked in glue, is laid on top and over this is laid a transparent paper soaked in a very hard transparent glue which gives a tough surface. The assembled layers are placed between polished steel sheets and pressed at a high temperature (Fig. 5).

Decorative laminated plastics are durable, clean looking, smooth and attractive. They are made in a variety of patterns.

NOTES:

Fig. 1

Fig. 2

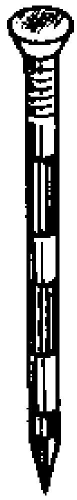

Fig. 3

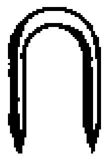

Fig. 4

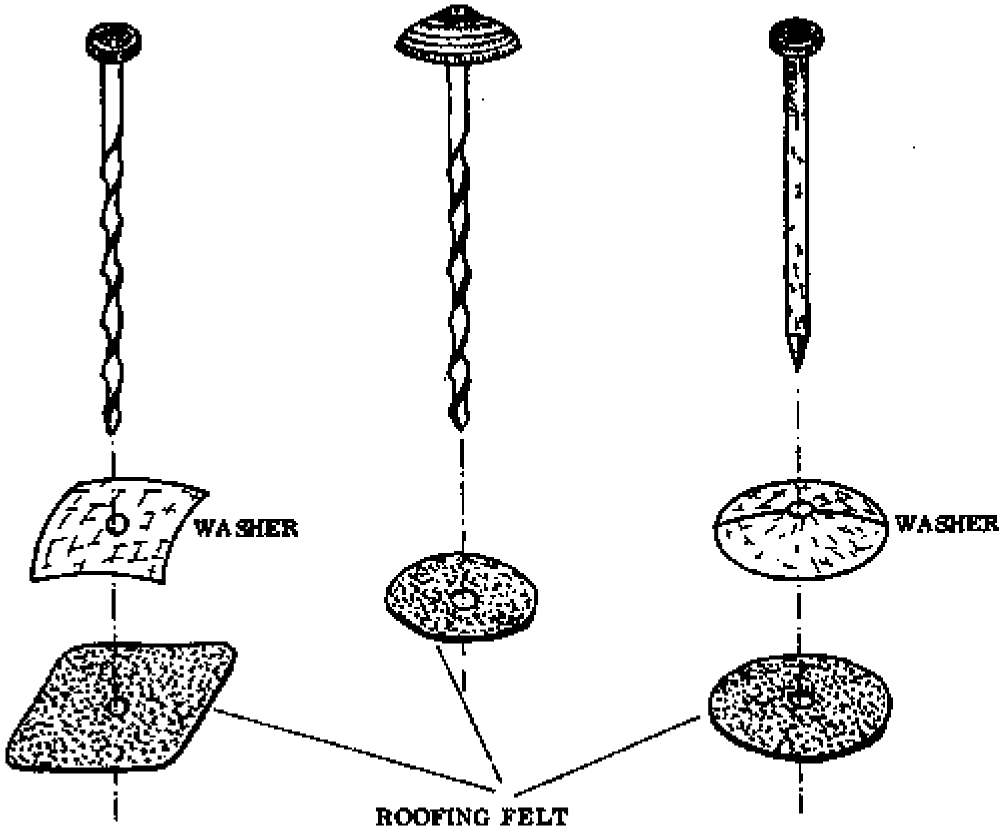

Fig. 5 Fig. 6 Fig. 7

WOOD FASTENINGS

NAILS

Nailing is a fairly strong, cheap and quick method of fastening wood (see Rural Building, Basic Knowledge, page 92).

Nails have a head, shank and point and are usually made from mild steel wire. Galvanized, copper-plated or aluminium nails are used for work which will be in contact with water.

In Rural Building we use mostly wire nails. We group these into two classes: wire nails with flat heads and wire nails with very small heads, known as lost head nails. Some nails are used for special purposes, like staples, concrete nails and roofing nails.

- WIRE NAILS WITH FLAT HEADS: These are nails with large flat heads (Fig. 1). The head prevents the fastened member from being pulled off over the head of the nail.

These nails are available in sizes from 7 to 310 mm long.

- WIRE NAILS WITH SMALL HEADS (LOST HEAD NAILS): These are wire nails with very small heads which can be punched or set below the surface of the wood and covered with putty. The disadvantage of this nail is that the nailhead can be easily pulled through the wood, so it cannot be used for heavy construction work (Fig. 2).

These nails are available in sizes from 7 to 100 mm long. Small lost head nails are called panel pins.

- CONCRETE NAILS: These are hardened steel nails, available in different shapes and sizes. They are used to fix things to concrete or masonry (Fig. 3).

- STAPLES: These are U-shaped nails (Fig. 4) with two points. They are used to fasten wires and screens to walls or timber.

- ROOFING NAILS AND WASHERS: Special roofing nails are used for fixing corrugated sheet materials. They should be aluminium or galvanized metal to prevent rust, which could cause the nailhead to break off. The nails must be long enough to go at least 2 cm into the wood.

Drive screws, or screw nails as they are sometimes called, are commonly used for roofing (Figs. 5 & 6) and they have largely replaced nails with plain shanks (Fig. 7). The drive screws are galvanized and the shank is 2 mm or more in diameter, with a steep thread around it.

Drive screws can be driven in with a hammer, but they are very difficult to pull out again.

There are different types: either with a metal washer already attached to the head of the nail (spring head roofing nail, Fig. 6, page 206), or with loose metal washers (Figs. 5 & 7, page 206)

The washers or the spring heads prevent the nails from being pulled through the roofing sheet. They should be thick and wide enough (at least 2 cm in diameter) so that they secure the sheets well.

Roofing felt is always used under the washer to prevent leaking. The felt should be larger in diameter than the washer. Place the washers correctly: the hollow side should face the roofing felt and the sheet.

ORDERING NAILS

When ordering nails, state the kind of nail; the thickness (in 1/10 mm) and the length (in mm). Also state the material of the nails.

Example: Lost head nails; 16 x 30; steel

NOTES:

SCREWS

After nails, screws are the next most common type of wood fastener used In Rural Building. Screws are superior to nails because:

- they have greater holding power,
- they cause less shock to the work when driven into it,
- and they are easily removed, without damage to the work.

Screws are made of mild steel, brass, copper or they are galvanized. Usually mild steel screws are used because they are stronger than the copper or brass ones.

The parts of a screw are: the head (a), the slot (b), the shank (c), the thread (d), the point (e) and the core (f) (Fig. 1, page 210).

Screws are classified according to the shape of their heads:

- Countersunk head screws (Fig. 1, page 210)
- Round head screws (Fig. 2, page 210)
- Raised countersunk head screws (Fig. 3, page 210)
- Coach screws (Fig. 4, page 210).

Posidriv or Phillips screws have a head which is not slotted across the full width like common wood screws. They have a cross-shaped recess into which a special screwdriver fits (see page 76).

- COUNTERSUNK HEAD SCREWS: The head of this kind of screw is flat on top and tapering underneath. The length is measured from the point to the top of the head (Fig. 1, page 210).

These are general purpose screws, used where the head of the screw must be flush with or below the surface of the wood.

- ROUND HEAD SCREWS: The head of these screws is round on top and flat underneath, and the length is measured from the underside of the head to the point (Fig. 2, page 210).

These are used only where the head can be visible and can project above the surface of the wood, and when fixing light metal, where the metal is too thin for countersinking.

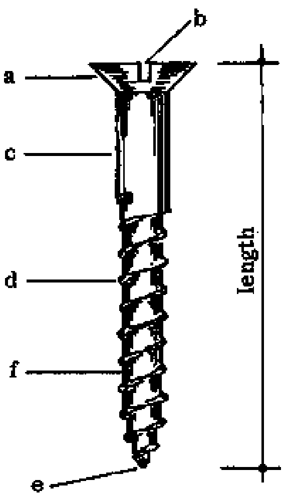

Fig. 1

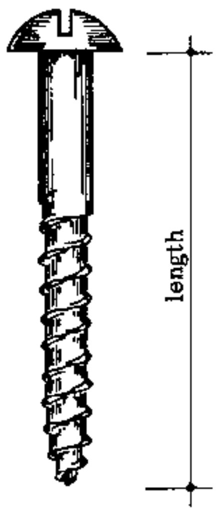

Fig. 2

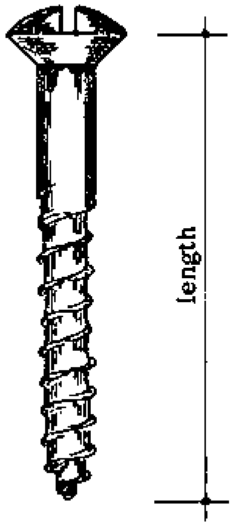

Fig. 3

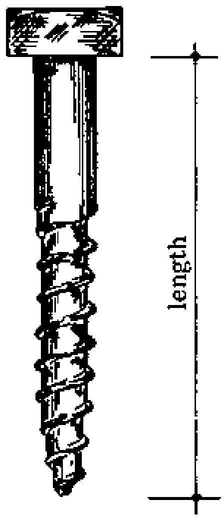

Fig. 4

- RAISED COUNTERSUNK HEAD SCREWS: The head of this screw combines the round and countersunk heads; round on top, tapering underneath. It is stronger than the round head screw because the head is less likely to break off. The length is measured as indicated in Fig. 3.

These screws are used in fixing heavy fittings and thick sheet metal, where strength is needed.

- COACH SCREWS: This is a strong screw with a square head. Unlike other wood screws, it is turned with a spanner. Always put a metal washer under the head to prevent damage to the wood surface. The length is measured from the point to the underside of the head (Fig. 4).

These are used for heavy construction work, for gate hinges, carriage work etc, where the head doesn't interfere.

ORDERING SCREWS

Screws are sold by number or in boxes containing a gross (144 screws). When ordering screws state the following in the order:

- thickness in mm
- length in mm
- kind of screw
- kind of metal
- amount needed

For example: 3 × 30; round head; brass screws; 3 gross or,
5 × 50; coach screw, mild steel with washers; 2 gross.

NOTES:

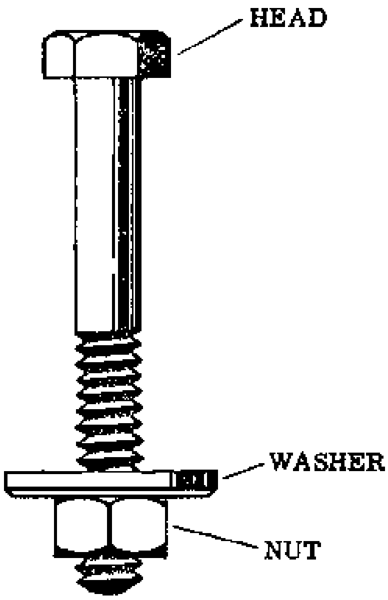

Fig. 1

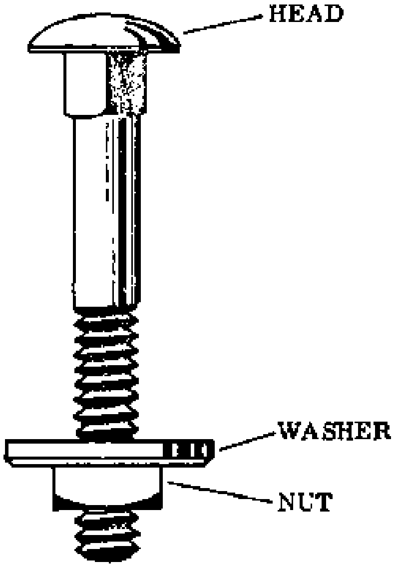

Fig. 2

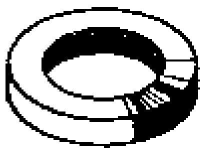

Fig. 3

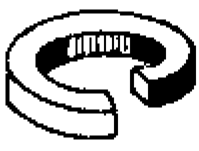

Fig. 4

BOLTS AND NUTS

Bolts and nuts are yet another means of fastening two pieces together. Bolts have hexagonal heads and are tightened up with the nuts. Bolts and nuts are used for heavy construction work (Fig. 1).

If bolts are used in timber, washers must be laid under the nut to prevent it from sinking into the wood (Fig. 3).

COACH BOLT

These bolts have oval heads and a square shank just under the head. This is so that the bolt grips the wood and doesn't turn when the nut is tightened up (Fig. 2).

The advantage of these bolts is that the head doesn't project up, since it is rounded and pulled into the wood.

WASHERS

A washer must always be used under the nut with both coach and regular type bolts. Never put a washer under the head of a coach bolt.

Washers can be made locally from a square piece of metal with a hole drilled in it.

SPRING WASHER

To prevent the nut from loosening when it is fastening metal to metal, a spring washer can be put between the metal and the nut. (Fig. 4).

NOTES:

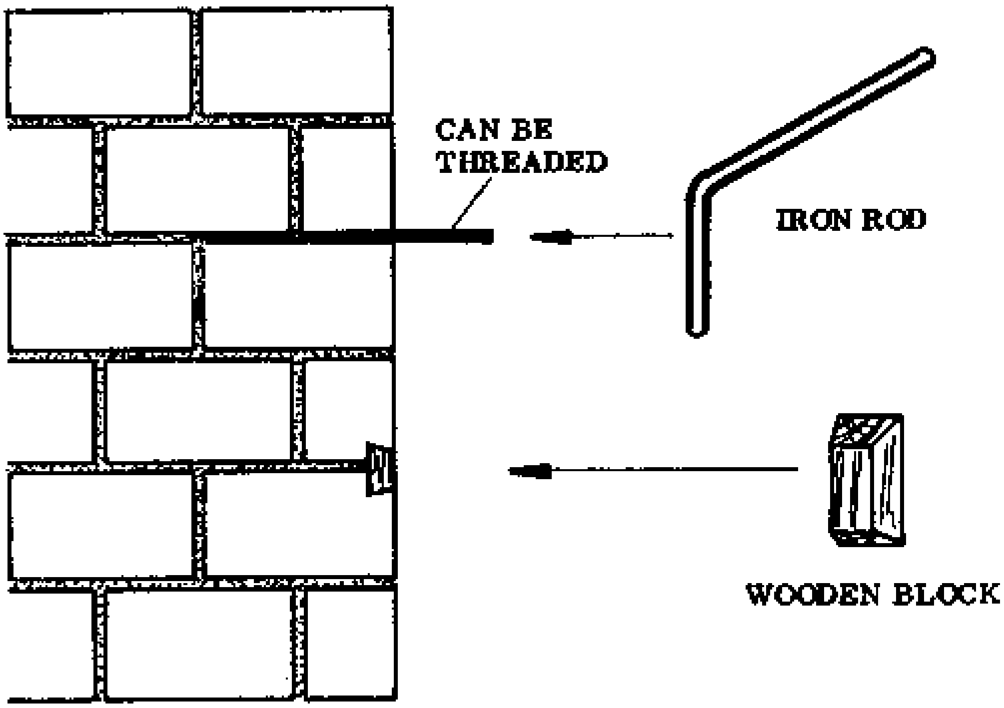
CAN BE
THREADED
IRON ROD
WOODEN BLOCK

Fig. 1

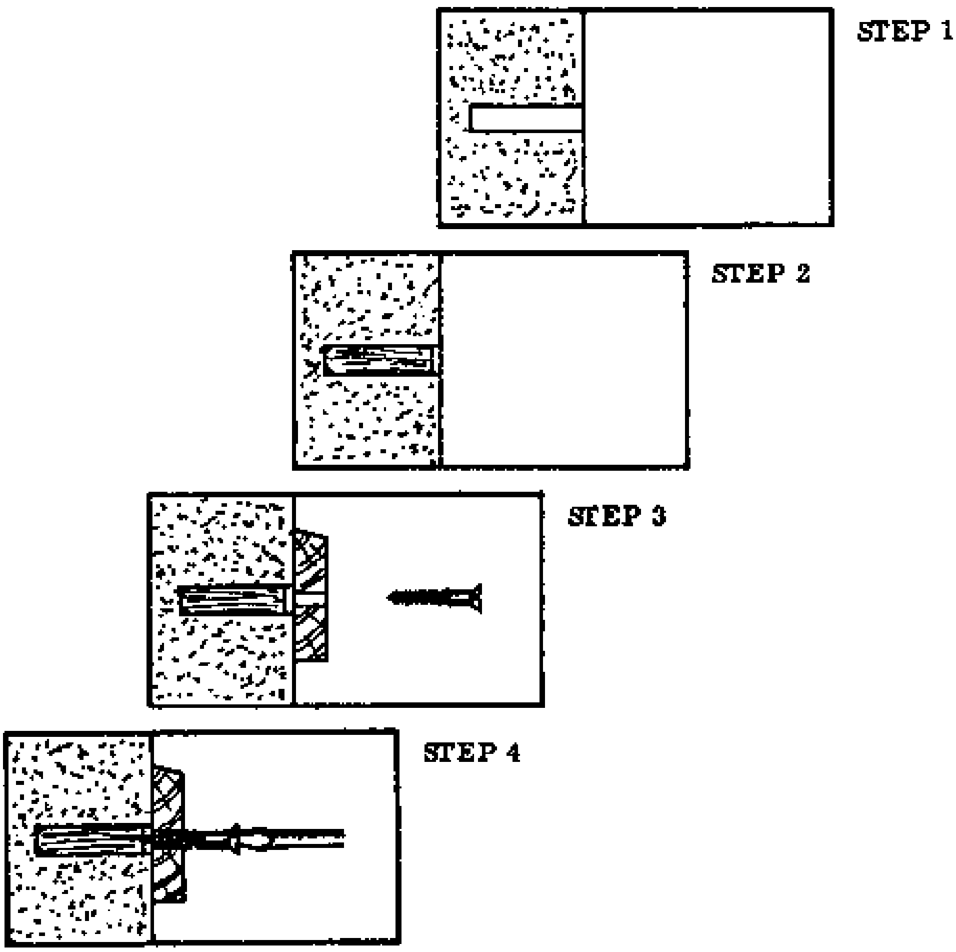
STEP 1
STEP 2
STEP 3
STEP 4

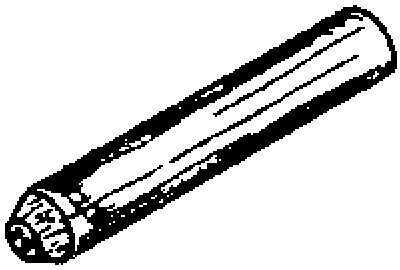

Fig. 2

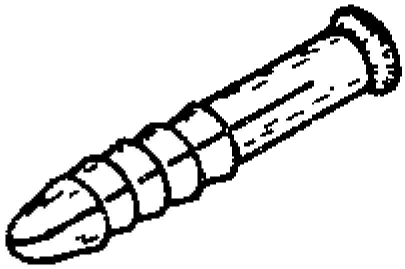

Fig. 3

ANCHORS

Fastening wood or other materials to concrete or masonry can be a problem. Often a screw will not hold in a landcrete block, or will not grip in concrete. Anchors can be used to solve this problem.

Anchors can be classed in two groups:

- anchors fixed during the initial construction and
- anchors which are fixed after the initial construction.

The first type of anchor can be an iron rod set into the wall during walling or casting, as is often done with the door frames. Threaded iron rods can be used, to receive a nut later on (Fig. 1).

Another way is to insert wooden blocks in the masonry; into which screws, etc. can be driven later. For maximum strength the wooden block should be dovetail shaped (Fig. 1) and it should be cut and fixed in a way that its shrinkage will have as little effect as possible on the wall.

The second group are the devices used to fix a piece to an already existing masonry or concrete work. The most simple of these is a wooden plug. A hole is chiselled or drilled into the masonry and into that hole is inserted a cylindrical plug of wood, which has the same diameter as the hole. The length of the plug should be a little less than the depth of the hole. The plug is made out of hard dry wood and the end which enters the wall is chamfered to enter smoothly. When a screw is driven into the plug, the wood will expand or even crack and the screw is wedged into position (Fig. 2).

More complicated devices, all sharing the same principle of holding a screw or nail by expanding, are now available. The most common one is a plastic plug (Fig. 3).

NOTES:

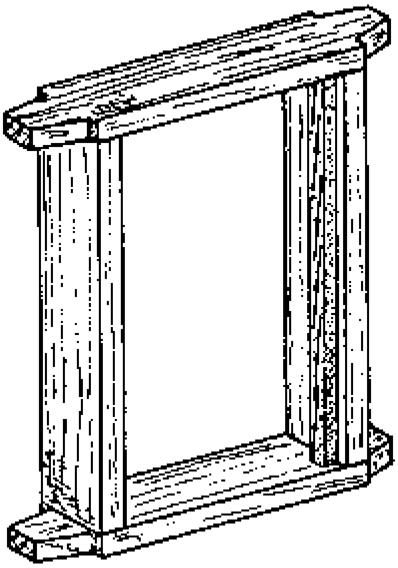

Fig. 1

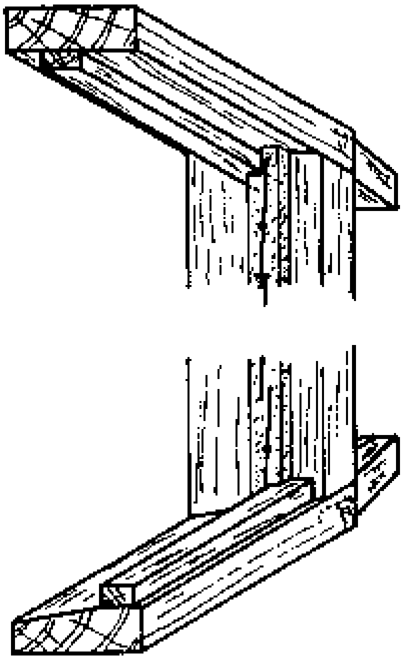

Fig. 2

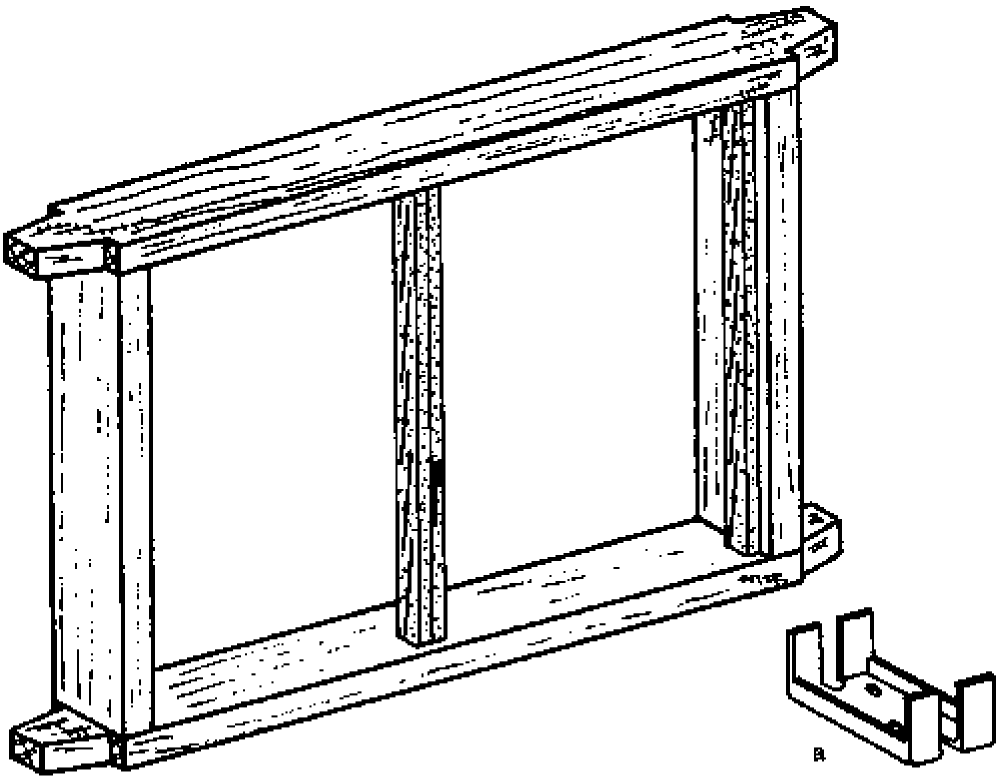

Fig. 3

DOOR AND WINDOW HARDWARE

LOUVRE WINDOWS

Windows with glass louvres are often used in the tropics because of their various advantages: they can be opened without any waste of space in the room and in the closed position they still admit light to the room. Their disadvantage is that it is very difficult to make them water-tight.

Louvre windows are installed ready-made into the window frame (Fig. 1). When the glasses are inserted in the window, wooden beads or ready-made aluminium waterbars are fitted to the head and cill to keep out dust and rain (Fig. 2).

In wide windows where two sets of louvres are installed in the frame, the metal posts of the louvre frame are fixed together in the middle, forming a metal mullion (Fig. 3). A separate wooden mullion is therefore not necessary. We will learn more in the Construction book (windows) about the installation of a self-mullioning louvre frame. Specially made mullion connectors are sold in a separate set (Fig. 3a).

Louvre windows are available in mild steel or aluminium frames. The aluminium frames need very little maintenance, but they are more expensive and less strong.

The size of the window frame is determined by the size and number of the louvre glasses. The inside width is:

- the length of the glass plus 3, 8 cm (the thickness of two frames).

If two or more louvres are set across the width of the window, then for each additional glass 3, 8 cm, plus the glass length must be added to the inside width of the frame.

The inside height of the window frame is determined by the number of louvre glasses.

Inside height (in cm) of window frames according to the number of louvre glasses:

No.	2	3	4	5	6	7	8	9	10	11	12	13	14
Ht.	30,5	44,5	58,4	72,4	86,4	100,3	114,3	128,3	142,2	156,2	170,2	184,2	198,1

All the above measurements are for 6 in. (15 cm) glasses. If you have other sizes, follow the manufacturer's instructions.

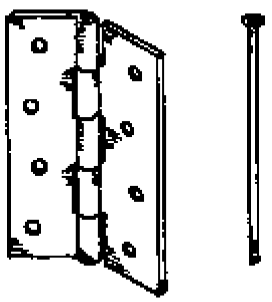

Fig. 1

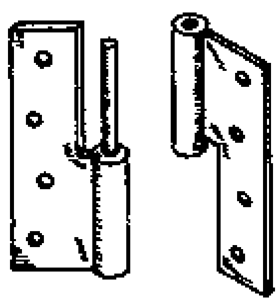

Fig. 2

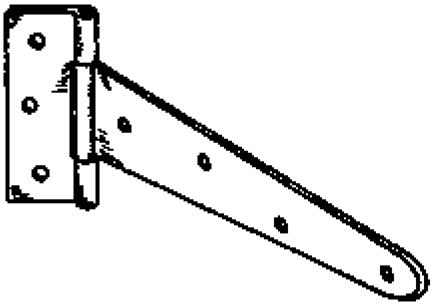

Fig. 3

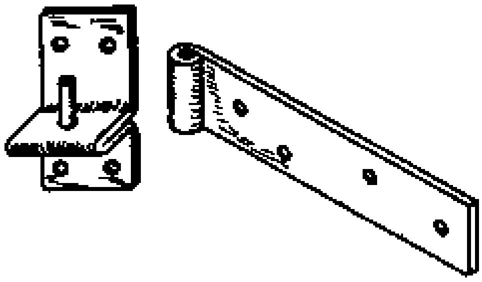

Fig. 4

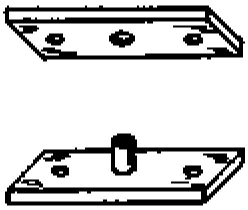

Fig. 5

HINGES

Hinges are available in almost countless different shapes, sizes and materials. The most common materials are steel, brass, and copper; or sometimes the hinge is only plated with brass or copper.

In Rural Building, we deal only with the most common types of hinges, which are butt hinges, H-hinges (Parliament hinges), T-hinges, band-and-hook hinges, and pivot hinges.

- BUTT HINGE: The ordinary steel butt hinge is cheap and durable, and it is the most common hinge for doors and casements (Fig. 1). It consists of two halves, also called leaves or flaps, held together by a pin. The pin may be removable or permanently fixed. If the pin can be removed from the outside when the door is shut and locked, the door is not burglar-proof.

When the door is shut, the two leaves (one attaches to the door post and the other to the hanging stile of the door) are folded together. The leaves are usually set into recesses in the door and post.

- H-HINGE (PARLIAMENT HINGE): The H-hinge, sometimes called the Parliament hinge, is similar to the butt hinge. It consists of two leaves, each with a knuckle. The pin is set permanently into the knuckle of one leaf. The H-hinge is installed in the same way as the butt hinge (Fig. 2).

- T-HINGE: T-hinges are mostly used for large and heavy doors, gates and ledged and battened doors. They are available in different sizes.

The hinge (Fig. 3) consists of a long mild steel strap, which is fixed to the outside of the door; and a cross bar which is hinged to the strap and attached with screws to the post of the door frame.

For security reasons, the strap of the T-hinge should be fixed to the door with at least one coach bolt, so that no one can unscrew the hinge to enter the building.

NOTES:

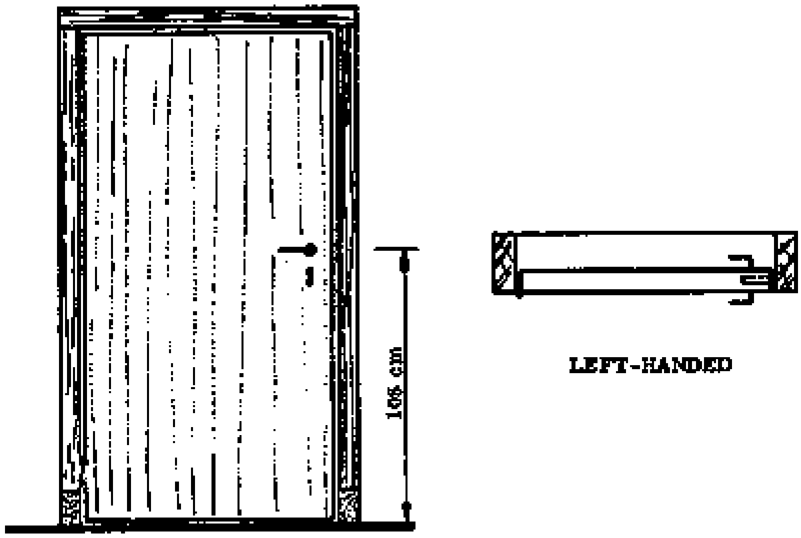

Fig. 1

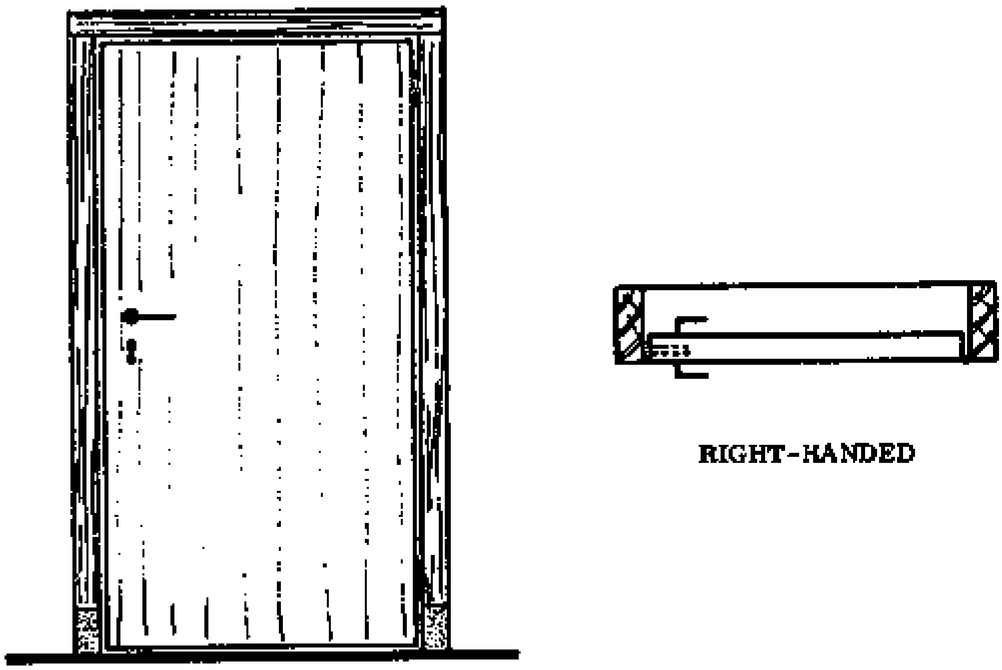

Fig. 2

- BAND-AND-HOOK HINGE: The band -aid-hook hinge is closely related to the T-hinge. It consists of an iron strip called the band, which drops onto a pin called the hook, which is attached to the frame of the door or window (Fig. 4, page 218).

They are used and installed in the same way as T-hinges.

- PIVOT HINGE: For windows, we sometimes use pivot hinges. These consist simply of a plate with a pin, which fits into a hole in another plate (Fig. 5, page 218).

LOCKS AND FITTINGS

There are many kinds of locks and fittings available for doors and casements. The choice between them depends on the type of door or casement and its function.

Doors and casements may be either left or right-handed. When the door opens towards you with the hinges on the left, it is a left-handed door (Fig. 1); if the hinges are on the right, the door is said to be right-handed (Fig. 2).

Some types of locks can be used on only one type of door, either right or left-handed. Therefore, we have to know whether the doors are right or left-handed before we order the locks, so we can buy the correct ones. Some types of locks have a latch bolt which can be changed to work in either type of door.

The most common types of locks are:

- the mortice lock
- the rimlock
- the padlock

The most common types of fittings are:

- the hasp and staple
- the barrel bolt
- the tower bolt
- the casement fastener

Locks are normally fixed at a height of 105 cm, measured from the floor to the centre of the handle (Fig. 1).

NOTES:

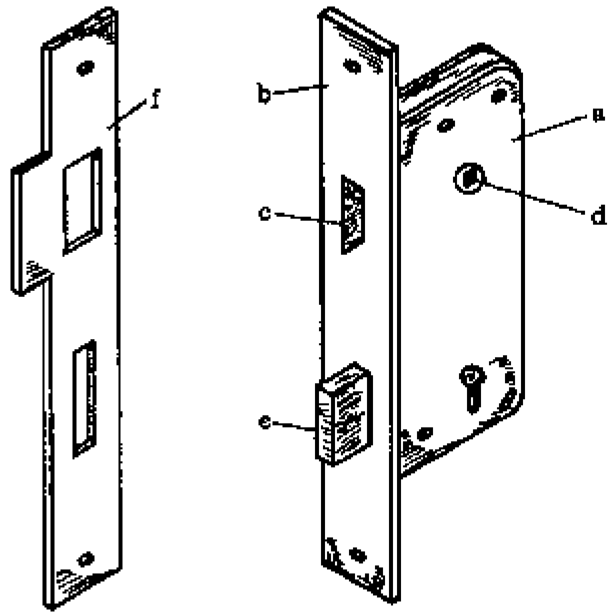

Fig. 1

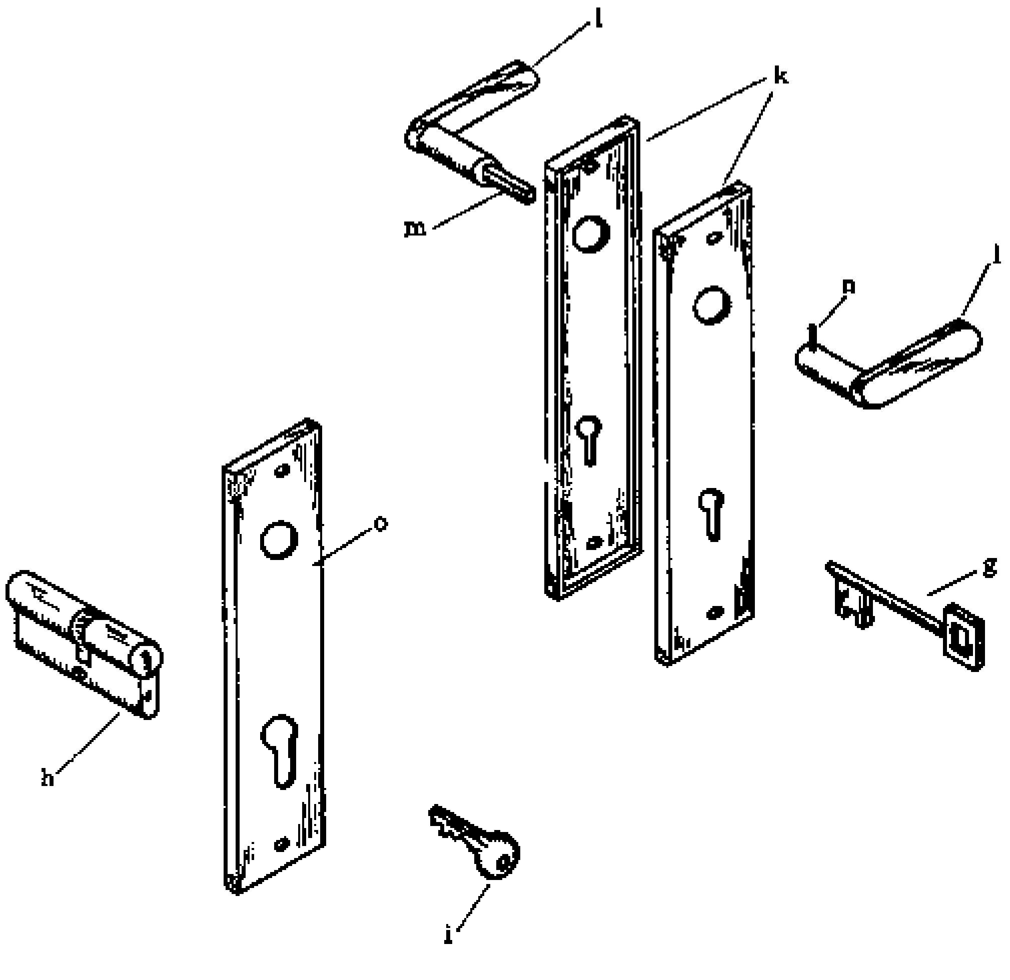

Fig. 2

- MORTICE LOCKS: Mortice locks (Fig. 1) consist of a stock (a), faceplate (b) and the latch bolt (c) moved by the handle. The handle fits into the bush (d) and there is a lock bolt (e) moved by the key. The two bolts fit into holes in the striking plate (f) which is attached by screws to the door post.

As the name suggests, the mortice lock fits into a mortice in the edge of the door. The stock should fit tightly against the sides of the mortice so that the door itself takes the strain, not the screws which only hold the lock in position.

Mortice locks can only be installed in doors which are thick enough to receive a mortice. They are difficult to force open, since they are inside the door.

Mortice locks are locked either with an ordinary key (g), which moves small levers inside the stock to push the lock bolt in and out, or with a locking cylinder (h), which operates the locking mechanism inside the stock. The advantage of the locking cylinder is that it is more secure, since a special key is needed to open and lock it (i).

- DOOR FURNITURE FOR MORTICE LOCKS: The door furniture (Fig. 2) consists of two leaf plates (k), two handles (1) and a spindle (m). The spindle is permanently fixed in one handle and secured in the other by a pin (n). The handle with the pin should always be inside the door, so that the pin cannot be loosened from the outside.

The leaf plates are attached to both sides of the door with screws; or better, with specially made bolts which cannot be torn out easily. The leaf plates hold the handle in place and prevent damage to the keyhole. Sometimes separate leaf plates are used for the keyhole and the handle.

The leaf plate for a mortice lock with a cylinder (o) has an opening into which the locking cylinder fits, instead of a keyhole.

NOTES:

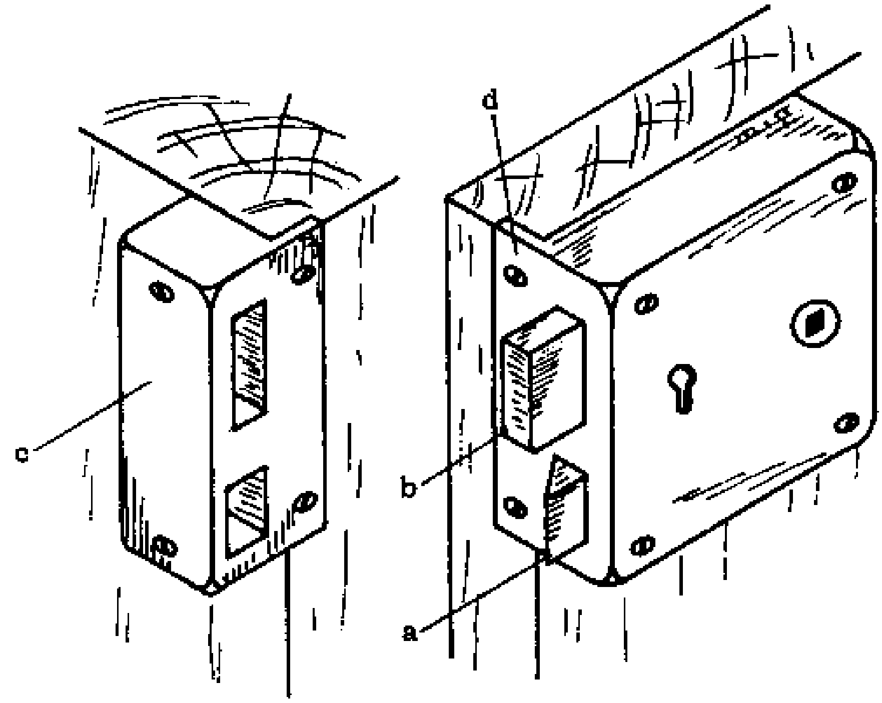

Fig. 1

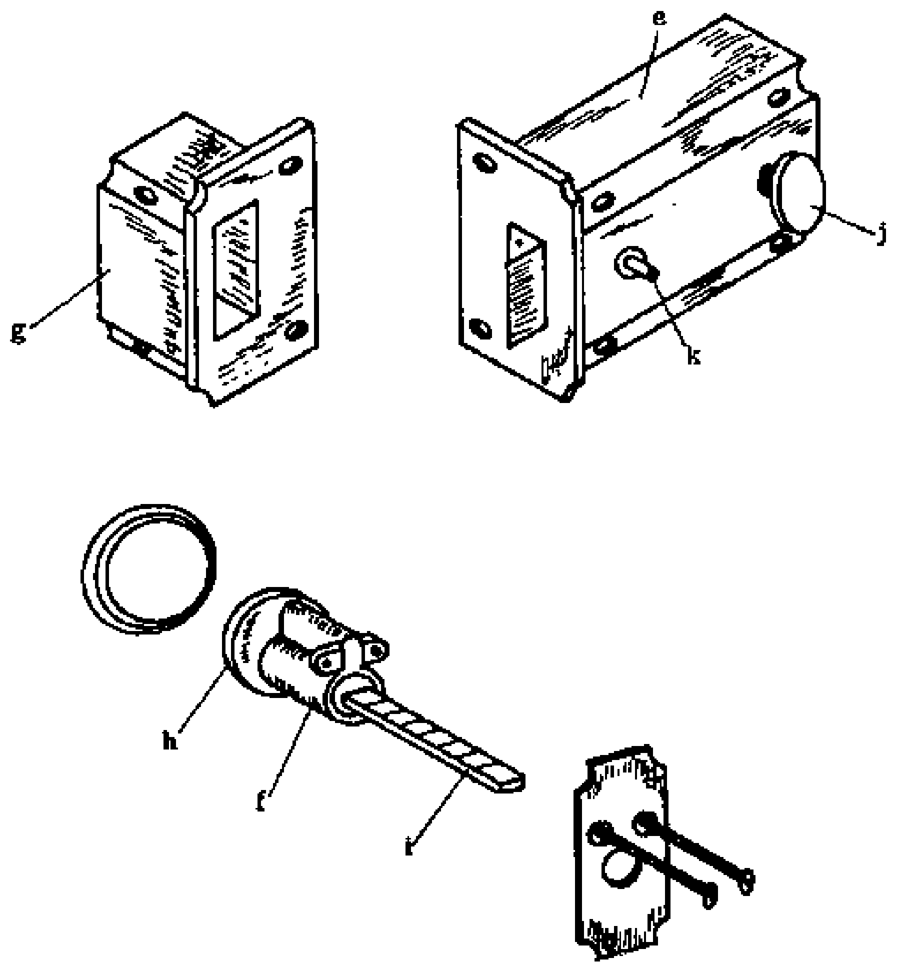

Fig. 2

- RIM LOCKS: Rim locks (Fig. 1) have a latch bolt (a) operated by a handle and a lock bolt (b) operated by a key from the outside or inside of the door. This kind of lock is attached with screws to the inside face of the door and the bolts shoot into a staple (c). There is a face plate (d) which is attached with screws to the door edge.

On the outside of the door, two round plates are attached with screws, one to hold the handle and the other to cover the keyhole. The handles have a square spindle which fits into the bush of the lock.

These locks are used on doors which are too thin to have mortice locks installed in them. Like the mortice lock, the rim lock is available with either an ordinary key locking system or with a locking cylinder.

- CYLINDER RIM NIGHT LATCH: This is a special kind of rim lock. It consists (Fig. 2) of a latch (e), a locking cylinder (f) and a staple (g). There Is a face plate (h) which is part of the shell of the cylinder. The spindle (i) is fixed in the cylinder.

The latch bolt is operated from the outside by a key which rotates the spindle. The spindle moves the bolt mechanism inside the latch.

The bolt may also be shot back from the staple by turning the knob (j) of the latch from the inside. The locking arm (k) is used to fix the bolt in place, so that it cannot be operated from either side by the key or the knob, making the lock more secure.

- PADLOCKS: Padlocks have a ring which locks into a body. The locking mechanism can be either a lever mechanism or a locking cylinder, as with the mortice lock.

NOTES:

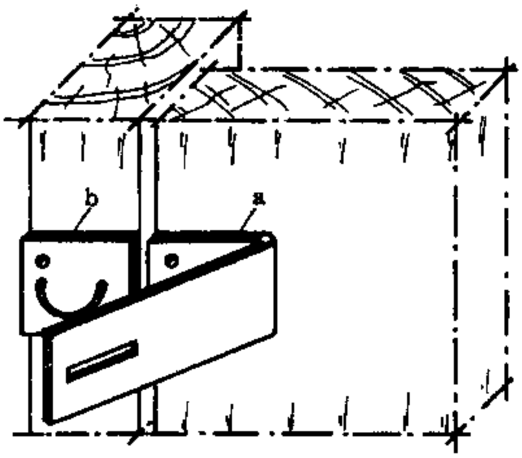

Fig. 1

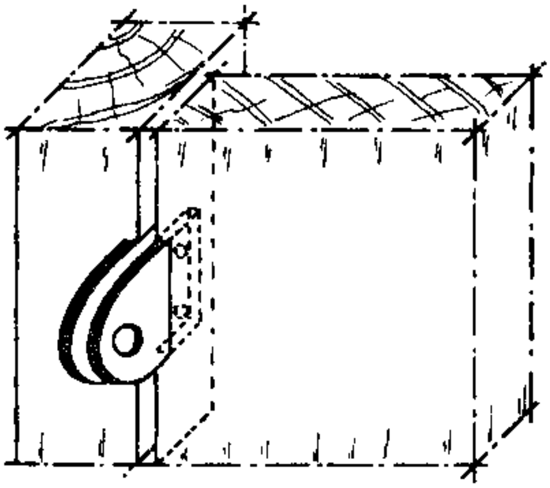

Fig. 2

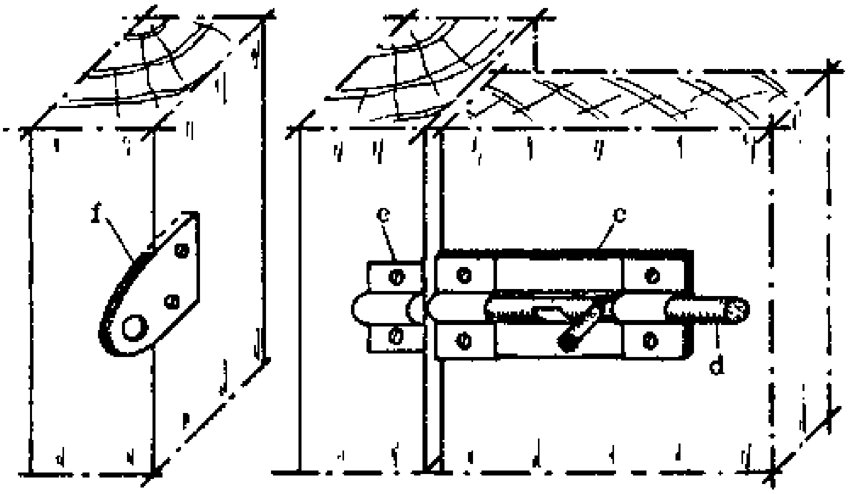

Fig. 3

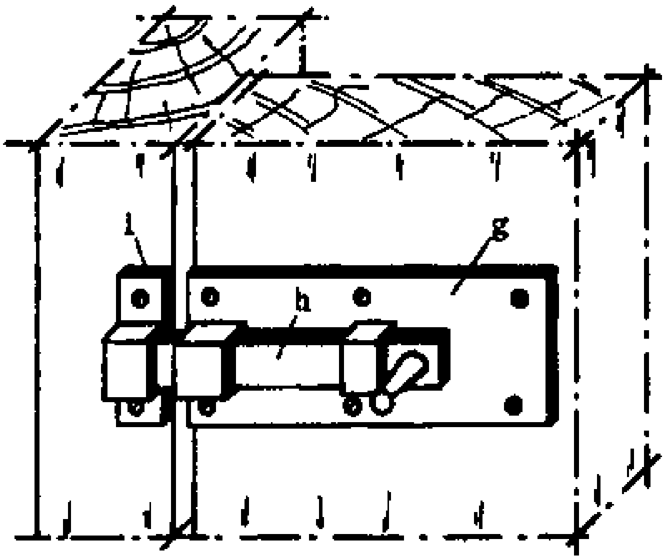

Fig. 4

- HASP AND STAPLE: The hasp and staple (Fig. 1) is usually used in combination with a padlock. It is installed on doors which do not have to be opened very often, as it takes time to open it.

The hasp (a) is screwed to the door or casement and the staple (b) to the frame. Some types of hasp and staple can be unscrewed from the outside. For security reasons, these types should be attached with bolts and nuts rather than with screws. The leaf of the hasp should be installed so that when closed it covers the screws.

An alternative to the hasp and staple is the device shown in Fig. 2. This is an efficient way of locking doors with a padlock and the parts can be made by hand. Two small plates have holes drilled in them for the padlock and screws to pass through. The plates are attached with screws to the edge of the door and the post.

- BARREL BOLTS: The barrel bolt (Fig. 3) consists of a plate (c) with a round bolt (d). The bolt engages in a staple (e). The plate is attached with screws to the inside of the door or window and the staple is attached to the frame. Barrel bolts are often used to lock casements.

A more effective staple can be made by hand (f), in the same way as the device in Fig. 2 above. It provides more security than the staple normally supplied with the barrel bolt since the screws are on the inside face of the post and cannot be so easily forced out. The bolt plate can also be attached with bolts and nuts to make it more secure.

- TOWER BOLTS: A tower bolt (Fig. 4) consists of a plate (g) with a flat bolt (h) fitted in it. The bolt engages in a staple (i) or in a striking plate in the frame. the plate and bolt are usually fixed on the door or casement.

NOTES:

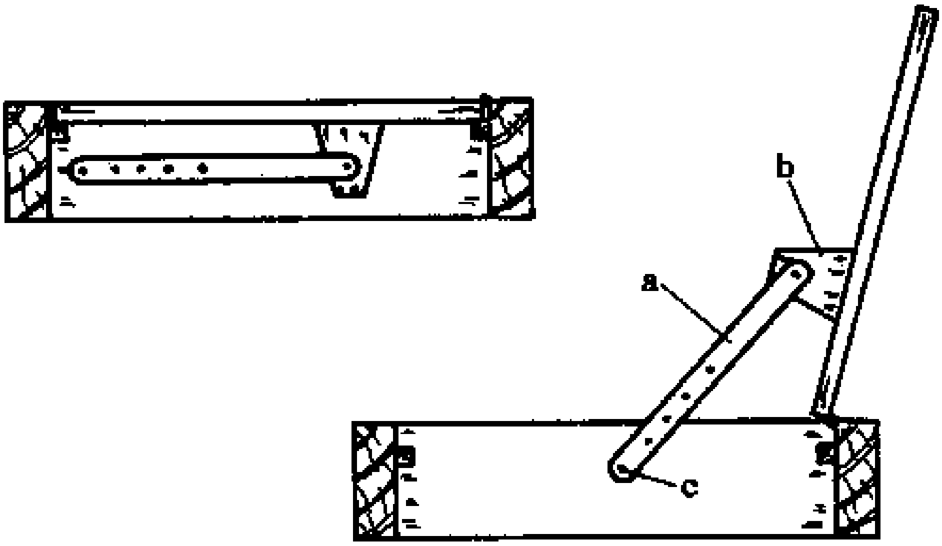

Fig. 1

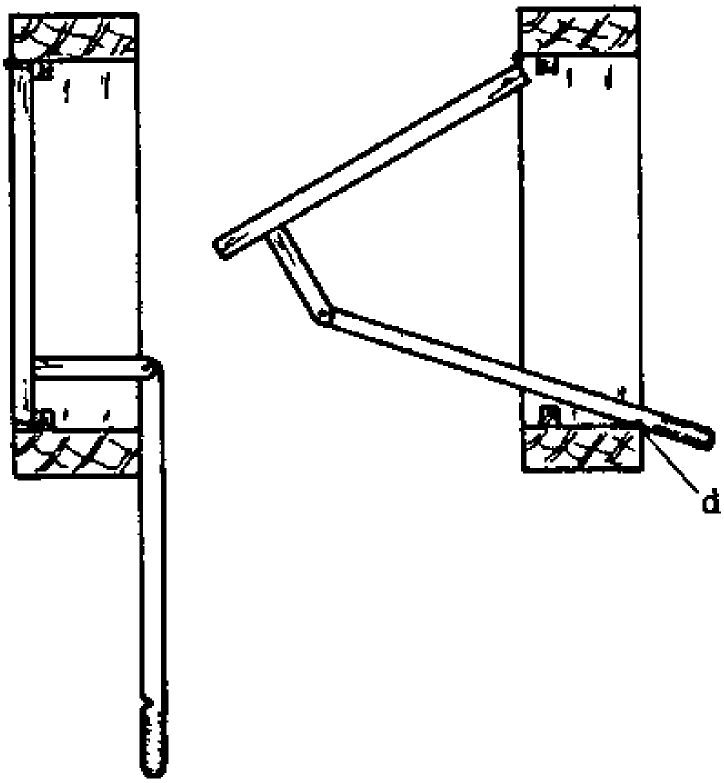

Fig. 2

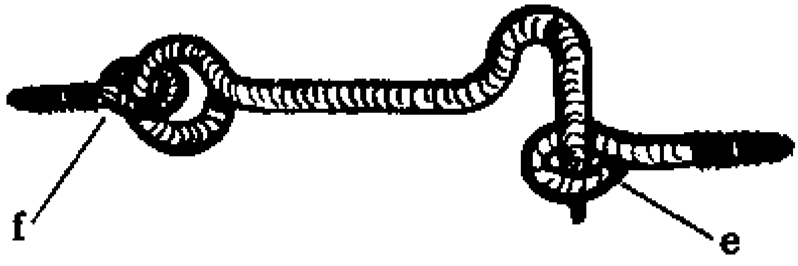

Fig. 3

- CASEMENT FASTENERS: Besides the barrel bolt and the tower bolt, there are some other methods for keeping casements in a closed or open position. These are the casement stay and the cabin hook.

The casement stay serves to keep the casement in the open position. It consists of a handle (a), either wooden or metal, which is fixed onto a plate (b) screwed to the casement. A hole in the handle fits over a small pin in the cill of the frame when the casement is open and holds the casement in position (Fig. 1, c).

If the casement opens upwards, the stay can be constructed so that it also serves as a lock when the window is closed (Fig. 2). A notch (d) holds the stay on the cill when the window is open.

The cabin hook (Fig. 3) is used to hold the casement in the closed position. It consists of a hooked bar which fits into a screw eye (e). The other end of the bar is held by a second screw eye (f) which is fixed on the door or casement.

- LOCKING DEVICE FOR LARGE DOORS: The drawings below show a locking device used for large doors on stores etc, where trucks or other vehicles may have to enter to deliver goods (Fig. 4). It consists mainly of a long baulk (a) which can hold the two doors securely shut. The baulk is fixed with a coach bolt (b) onto one of the doors.

Two wooden blocks (c) hold the baulk in position when the doors are closed and a catch (d) prevents the baulk from swinging open by its own weight or from a gust of wind (Fig. 5). A piece of flat iron (e) bent as shown in Fig. 4, keeps the baulk in the locked position. This iron should be firmly attached to the door.

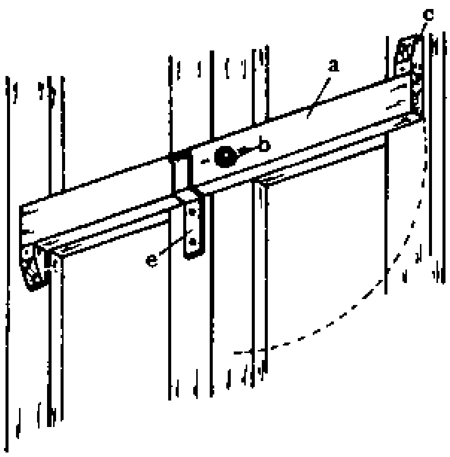

Fig. 4

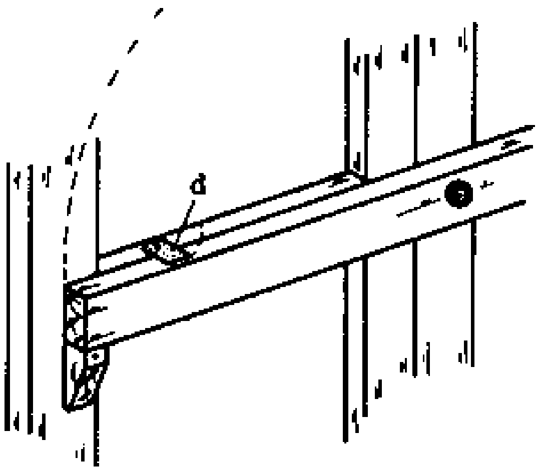

Fig. 5

ROOF COVERINGS

When we talk about roof covering, we mean the non-load-bearing clothing of the roof. In Rural Building, we deal with three different types of roof coverings. These are:

- corrugated aluminium sheets,
- corrugated galvanized iron sheets and
- corrugated asbestos cement sheets.

All of these sheets are corrugated because that makes them stiffer so that they can go across the gap between the purlins without sagging.

CORRUGATED ALUMINIUM SHEETS

This roof covering is lighter and far more durable than the other types. Lightness is important so that the sheets can be easily transported. Aluminium sheets are rust-proof, easily installed and have a bright reflective surface which helps to keep the building cool.

However, the thinner gauge sheets are especially vulnerable to being dented, punctured, or torn off by storms. The sheets also creak a lot when temperature changes make them expand or contract.

Aluminium roof covering is available in a variety of shapes and sizes. The sheets can be from 61 to 76 cm wide and 200 to 400 cm long. Sheets up to 18 metres in length can be ordered from the factory.

In Rural Building, we mostly deal with sheets which are 61 cm wide and 244 cm long. This size is the most commonly used and readily available.

The sheets are available in different thicknesses or gauges. The thinnest is 26 SWG (Standard Wire Gauge; 26 SWG = 0,446 mm) and the thickest is 18 SWG (=1,22 mm).

Store the sheets in a dry place. Avoid putting them in contact with fertilizer, lime or cement.

Further details and instructions concerning aluminium sheets can be obtained from:

Ghana Aluminium Products Limited
P.O. Box 124
Tema

Also look at the Tables of Figures, pages 239 and 240, for more information.

CORRUGATED GALVANIZED IRON SHEETS

These are steel sheets which are corrugated and galvanized on both sides. They are usually thicker and heavier than aluminium sheets, so they lack some of the drawbacks of the aluminium, like being easily punctured or torn away in storms.

The most common size of these sheets is 61 by 244 cm.

CORRUGATED ASBESTOS CEMENT SHEETS

This kind of roofing sheet is also widely used. The disadvantage of these is that they are brittle and break easily if they are walked on or if a heavy object falls on them. They can also break if the roof construction warps due to the humidity changes in different seasons. Another problem is that they are heavy, and so they are difficult to transport.

The standard size is again 61 by 244 cm.

HOW TO ORDER SHEETS

When ordering sheets, you must keep in mind that the overlap of two corrugations on each sheet must be subtracted to find the effective width of the sheet.

RIDGE CAPS

Ready made caps for covering the ridge of the roof are also available. They are made from aluminium, galvanized iron or asbestos cement, to fit with the roofing sheet material.

Ridge caps can be made locally out of aluminium or galvanized iron sheets as will be explained when we come to roof construction.

The caps have to overlap the sheets on both sides of the roof. In the case of a roof which has the ridge along the direction of the prevailing wind (in northern Ghana, this is the east-west axis) the cap must overlap the sheets by 20 cm on each side. If the ridge lies across the direction of the prevailing wind (north - south) the cap has to overlap by 30 cm on each side (see Tables of Figures, page 239).

NOTES:

APPENDIX I: TABLES OF FIGURES

WEIGHT OF AGGREGATES

Dry sand weighs about 1800 kg per cubic metre, or 1,8 tons.

Broken stones weigh about 1700 kg per cubic metre, or 1,7 tons.

One slightly heaped headpanful of dry sand weighs about 30,5 kg.

One slightly heaped headpanful of broken stones weighs about 29 kg.

TABLE OF LOADING CAPACITIES FOR VEHICLES

Loading capacity	Maximum number of headpans	
	dry sand (fine and coarse)	broken stones (small and medium)
1 ton	33	34
1,5 tons	49	51
2 tons	65	69
2,5 tons	82	86
3	98	103
3,5 tons	115	120
4	131	138
4,5 tons	147	155
5	164	172
5,5 tons	180	189
6 tons	197	207
6,5 tons	213	224
7 tons	229	241
7,5 tons	246	258

- REMEMBER: Never overload the vehicle! Observe the above quantities strictly.

NOTES:

TRANSPORTATION OF AGGREGATES

Supposing we have a 3,5 ton lorry available for transporting the aggregates, we can now figure out how many trips with the lorry will be necessary. If we know the total amount needed of each aggregate, we can find the number of lorry loads needed from the table on the left page.

For example, we need for the whole building:

429 headpans of fine sand;
152 headpans of coarse sand;
181 headpans of small broken stones;
165 headpans of medium broken stones.

The number of lorry loads required is found by dividing the number of headpans above by the number found in the table for the 3,5 ton lorry:

- Fine sand: 429 divided by 115 equals 3,73 or approximately 4 loads.
- Coarse sand: 152 divided by 115 equals 1,32 or approximately 1,5 loads.
- Small broken stones: 181 divided by 120 equals 1,5 loads.

- Medium broken stones: 165 divided by 120 equals 1,37 or approximately 1,5 loads.

- NOTE: It is always better to have a little extra material. Therefore, it is better to fill the lorry with every trip rather than take back a half-load. The cost of the transportation will be about the same anyway.

NOTES:

BUILDING MATERIALS REQUIREMENT FOR ONE CUBIC METRE CONCRETE
(approximation values)

USE	MIX	CEMENT		WATER		AGGREGATES (in headpans)			
codes (key below)	prop.	bags (50 kgs)	head-pans	buckets size no. 28	head-pans	fine sand	coarse sand	small broken stones	medium broken stones
1	1:15	2	4,5	4,5	3	21	19	23	21
1;4	1:12	2,5	5,5	5,5	3,75	21	18,75	23	21
1;4;5	1:10	3	6,75	6,75	4,5	20,5	18,5	22,5	20,5
2;4;5	1:9	3,25	7,5	7,5	5	20,25	18,25	22,25	20,25
2;3;4;5	1:8	3,5	7,75	10	6,5	20	18	22	20
3;4;5	1:7	4	9	11	7,5	19,5	17,5	21,5	19,5
3;4;5	1:6	4,5	9,5	12,5	8,5	19	17,25	21	19
3;5	1:5,5	5	11,25	13,75	9	19	17	21	19
6;7;8	1:5	5,5	12,5	14,5	10	18,75	22,50	33,75	---
6;7;8	1:4,5	6	13,5	16,5	11	18,25	22	33	---
6;7;8;9	1:4	6,5	14,5	18	12	18	21,5	32,5	---
8;9	1:3,5	7	15,75	20	13,5	17,25	20,75	31,25	---
8;9	1:3	8	18	22	14,5	16,5	20	30	---

KEY FOR USE CODES

1 = foundations
2 = sandcrete blocks*
3 = mortar*
4 = plaster/render*
5 = floors
6 = columns
7 = beams/lintels
8 = slabs
9 = screed mortar*

- NOTE: Any reinforced concrete member of the structure must contain at least 270 kg of cement per cubic metre; and must be free of medium and large sized stones. Therefore, the figures in the upper part of the table are never used in mixing reinforced concrete.

* The items marked with a star are those which contain only sand as an aggregate. The amount of sand required is obtained by adding together the amounts of all the aggregates: fine and coarse sand, small and medium broken stones.

HOW TO USE THE TABLE

When the plans for the building are completed, the builder can make calculations to find how much cement needs to be ordered. From the dimensions in the plan, the volume in cubic metres can be found for the various parts of the structure such as the foundation, floor, footings, etc. This is done by multiplying the width, length, and height of a part to get its cubic volume.

The examples below show how to calculate the cement required once you have found the volumes.

- FOUNDATIONS: Mix proportion = 1:10, volume = 5,75 cubic metres.

- FOOTINGS: Mix proportion of sandcrete blocks and mortar = 1:8, volume = 3,3 cubic metres.

-FLOOR: Mix proportion = 1:7, volume = 2,4 cbm.

- CALCULATION:

  FOUNDATIONS: According to the table, the mix proportion of 1:10 requires 3 bags of cement per 1 cbm. Therefore, we multiply 5,75 cbm x 3 = 17,25 bags of cement.

  FOOTINGS: The mix proportion of 1:8 requires 3,5 bags of cement per cbm. We multiply the volume of 3,3 cbm x 3,5 = 11, 55 bags of cement.

  FLOOR: The mix proportion of 1:7 requires 4 bags of cement per cbm. We multiply the volume of 2,4 cbm x 4 = 9,6 bags of cement.

We now add up the three results above and obtain a final result:

17,25
+ 11,55
+ 9,6
38,40 bags

The total of 38,40 means that 39 bags of cement have to be ordered.

Do not forget to include all the members which contain cement in your calculations: landcrete blocks, mortar, lintels, concrete ring beam, etc.

The cement requirements for landcrete blocks varies according to the soil used. For approximate values see the table on page 179.

NOTES:

When the cement requirements have been determined, we can use the table to find the quantities of aggregates that are needed. This is done by multiplying the same volume measurement by the appropriate number in the table.

- FOUNDATIONS:

5,75 cbm × 20,5 equals approximately 118 headpans of fine sand.
5,75 cbm × 18,5 equals approximately 106 headpans of coarse sand.
5, 75 cbm × 22,5 equals approximately 129 headpans of small broken stones.
5,75 cbm × 20,5 equals approximately 118 headpans of medium broken stones.

- FOOTINGS: Since the sandcrete blocks and the mortar require only sand, all four quantities under aggregates (fine sand, coarse sand, small and medium broken stones) are added together and the result is multiplied by the volume of the footings: 20 + 18 + 22 + 20 = 80; 80 × 3,3 cbm = 264 headpans of sand.

- FLOOR:

2,4 cbm × 19, 5 equals approximately 47 headpans of fine sand.
2,4 cbm × 17,5 equals 42 headpans of coarse sand.
2,4 cbm × 21,5 equals approximately 52 headpans of small broken stones.
2,4 cbm × 19,5 equals approximately 47 headpans of medium broken stones.

NOTES:

HEIGHT MEASUREMENTS FOR WALLS

This table can be used to calculate the height of a wall (not including copings, tie beams, or foundations) or to calculate the number of courses in the wall in order to make it a certain height.

LC = Landcrete wall; NC = number of courses; SC = sandcrete wall.

EDGEWISE LAID		
LC	NC	SC
24	1	25
48	2	50
72	3	75
96	4	100
120	5	125
144	6	150
168	7	175
192	8	200
216	9	225
240	10	250
264	11	275
288	12	300
312	13	325
336	14	350
360	15	375

FLATWISE LAID BLOCKS						
LC	NC	SC		LC	NC	SC
16	1	17		256	16	272
32	2	34		272	17	289
48	3	51		288	18	306
64	4	68		304	19	323
80	5	85		320	20	340
96	6	102		336	21	357
112	7	119		352	22	374
128	8	136		368	23	391
144	9	153		384	24	408
160	10	170		400	25	425
176	11	187		416	26	442
192	12	204		432	27	459
208	13	221		448	28	476
224	14	238		464	29	493
240	15	255		480	30	510

USING THE TABLE

- FOR EXAMPLE: The walls of a common house (not including wall plate or ring beam) are supposed to reach a height of 3 m above the finished floor level. We find with the aid of the above table that the plinth course of sandcrete blocks must be followed by 12 courses of landcrete blocks to reach a height of: 0,25 m + 2,88 m = 3,13 m. The floor is 10 cm thick, so the height above the finished floor level will be 3,13 m - 0,10 m = 3,03 m.

- ANOTHER EXAMPLE: The bottom of a water tank must be at a height of 4 m above ground level. With the aid of the table, the Rural Builder can easily figure out that he needs to make 24 courses of flatwise sandcrete blocks to reach this height.

LENGTHS OF WALLS

LC = Landcrete blocks, length of wall (cm); No = number of blocks; SC = sandcrete blocks, length of wall (cm).

LC	No	SC
29	1	46
60	2	94
91	3	142
122	4	190
153	5	238
184	6	286
215	7	334
246	8	382
277	9	430
308	10	478
339	11	526
370	12	574
401	13	622
432	14	670
463	15	718
494	16	766
525	17	814
556	18	862
587	19	910
618	20	958
649	21	1006
680	22	1054
711	23	1102
742	24	1150
773	25	1198
804	26	1246
835	27	1294
866	28	1342
897	29	1390
928	30	1438
959	31	1486
990	32	1534
1021	33	1582
1052	34	1630
1083	35	1678

LC	No	SC
1114	36	1726
1145	37	1774
1176	38	1822
1207	39	1870
1238	40	1918
1269	41	1966
1300	42	2014
1331	43	2062
1362	44	2110
1393	45	2158
1424	46	2206
1455	47	2254
1486	48	2302
1517	49	2350
1548	50	2398
1579	51	2446
1610	52	2494
1641	53	2542
1672	54	2590
1703	55	2638
1734	56	2686
1765	57	2734
1796	58	2782
1827	59	2830
1858	60	2878
1889	61	2926
1920	62	2974
1951	63	3022
1982	64	3070
2013	65	3118
2044	66	3166
2075	67	3214
2106	68	3262
2137	69	3310
2168	70	3358

LC	No	SC
2199	71	3406
2230	72	3454
2261	73	3502
2292	74	3550
2323	75	3598
2354	76	3646
2385	77	3694
2416	78	3742
2447	79	3790
2478	80	3838
2509	81	3886
2540	82	3934
2571	83	3982
2602	84	4030
2633	85	4078
2664	86	4126
2695	87	4174
2726	88	4222
2757	89	4270
2788	90	4318
2819	91	4366
2850	92	4414
2881	93	4462
2912	94	4510
2943	95	4558
2974	96	4606
3005	97	4654
3036	98	4702
3067	99	4750
3098	100	4798
3129	101	4846
3160	102	4894
3191	103	4942
3222	104	4990
3253	105	5038

LC	No	SC
3284	106	5086
3315	107	5134
3346	108	5182
3377	109	5230
3408	110	5278
3439	111	5326
3470	112	5374
3501	113	5422
3532	114	5470
3563	115	5518
3594	116	5566
3625	117	5614
3656	118	5662
3687	119	5710
3718	120	5758
3749	121	5806
3780	122	5854
3811	123	5902
3842	124	5950
3873	125	5998
3904	126	6046
3935	127	6094
3966	128	6142
3997	129	6190
4028	130	6238
4059	131	6286
4090	132	6334
4121	133	6382
4152	134	6430
4183	135	6478
4214	136	6526
4245	137	6574
4276	138	6622
4307	139	6670
4338	140	6718

USING THE TABLE

Suppose you are planning a wall which is about 6 metres long, made from landcrete blocks. In this case it would be best to choose either 5,87 m or 6,18 m as the final length, so that it is not necessary to cut blocks to fit.

The table makes it simple to read off the number of blocks required per course, so it is easier to calculate the building materials that will be required. For example, a 34, 70 m landcrete wall contains 112 blocks per course. The number of courses required to reach a certain height can be found in the table on page 237.

ROOFING SHEET REQUIREMENT

This table is to help you to find the number of roofing sheets that need to be ordered, according to the length of the planned building. The number of sheets in this table refers only to the sheets along one side of the ridge line; so if you want to make a gable roof you have to double this number to get the number of sheets that will cover both sides of the roof. In addition, if the building is wide, so that more than one sheet is needed to cover the distance between the ridge and the lower edge; then the number from the chart has to be multiplied by the total number of sheets across the whole width of the building (see the example given on the next page).

The figures below are for the most commonly used roofing sheet size, which is 61 cm by 244 cm. The effective width of the sheets (minus 2 corrugations overlap) is approximately 50 cm (see pages 230 and 231). The figures include an allowance of 20 cm extra at each gable end.

NS = Number of roofing sheets; L (m) = the length of the building in metres.

NS	L (m)	NS	L (m)	NS	L (m)	NS	L (m)
3	1,1	14	6,6	25	12,1	36	17,6
4	1,6	15	7,1	26	12,6	37	18,1
5	2,1	16	7,6	27	13,1	38	18,6
6	2,6	17	8,1	28	13,6	39	19,1
7	3,1	18	8,6	29	14,1	40	19,6
8	3,6	19	9,1	30	14,6	41	20,1
9	4,1	20	9,6	31	15,1	42	20,6
10	4,6	21	10,1	32	15,6	43	21,1
11	5,1	22	10,6	33	16,1	44	21,6
12	5,6	23	11,1	34	16,6	45	22,1
13	6,1	24	11,6	35	17,1	46	22,6

SHEET REQUIREMENT FOR RIDGE CAPS

When the ridge of the roof is oriented in the direction of the prevailing winds (the direction from which the wind usually comes; in northern Ghana this is the east) then the ridge cap has to overlap 20 cm on each side of the ridge. Thus a common roofing sheet (244 cm long) will provide 6 ridge caps, each 40 cm long. To find the number of sheets required for the ridge caps, use the figure you get from the table above and divide it by 6.

For example: The building will be 10 metres long; looking in the table you find the figure of 21 sheets. Divide 21 by 6; this gives 3,5 (or approximately 4) sheets which are required for the ridge caps.

When the ridge of the roof is oriented across the direction of the prevailing winds (in northern Ghana this would be north-south), the ridge cap has to be wider so that the sheets are held better against the wind. In that case, the caps have to overlap each side of the ridge by 30 cm; therefore the roofing sheet can be cut into 4 pieces, each 60 cm long. To find the number of roofing sheets required for the caps, divide by 4 instead of by 6. Thus in our example, 21 divided by 4 gives 5,25 (or approximately 6) sheets required for the ridge caps.

ROOFING SHEET REQUIREMENT / WIDTH OF BUILDING

In order to avoid unnecessary waste, the Rural Builder should decide on the width of the building with the size of the roofing sheets in mind (see Construction, pages 158 & 159). The table below gives the span of the roof for a gable roof according to the number of sheets required to reach from ridge to eave level on each side of the roof. The sheets are standard 244 cm long roofing sheets, the roof has a 20 degree pitch, and there is an allowance of 50 cm extra on each side for the sheets to overhang (overhanging eave).

NS = Number of sheets; W (m) = Width (span) of the roof truss.

NS RIGHT	W (m)	NS LEFT
1	3,65	1
1	4,65	1½
1½	5,65	1½
1½	6,8	2
2	7,95	2
2	8,95	2½

NS RIGHT	W (m)	NS LEFT
2½	9,95	2½
2½	11,1	3
3	12,3	3
3	13,3	3½
3½	14,3	3½

- EXAMPLE: If the roof is to be 21 m long and 8 m wide (span of the truss), with a pitch of 20 degrees, and oriented with the prevailing wind, the number of sheets required can be figured as follows:

From the table on the proceeding page, we see that 43 sheets will fit along the ridge line. The table above shows that 4 sheets are required to cover the width of the house. When we multiply both numbers, we get the total amount of sheets which is 172 sheets.

We must also find the number of sheets required for the ridge caps. Dividing 43 by 6 gives approximately 8 sheets, making a total of 180 sheets to be ordered.

APPENDIX II: GLOSSARY

Most new terms are explained in the text as they come up, but after that they are used without explanation. To make it easier for you, the words which tend to come up again and again are explained here once more, and references are given when possible to more thorough explanations in one of the text books.

- NOTE: The other books referred to here are given as abbreviations: the Basic Knowledge book is referred to as "BK"; and the Construction book is written as "Con". Where the page number only is given, it refers to the page in this book.

<u>TERMS</u>

- AGGREGATE: The sand, rocks or gravel which make up the greater part of concrete, sandcrete blocks, mortar, plaster or render (see page 147)

- ANCHORAGE: This refers usually to iron rods which are embedded in one part of the building and serve to hold another part in place, for example the roof anchorage which is embedded in the walls and holds the roof construction in place.

- ANGLE OF PITCH: This means the slope of the face of a saw tooth (see page 109); or else it refers to the slope of the roof construction (roof pitch), depending on the context where it is used (see page 158, Con).

- BATTEN: This usually refers to a small piece of wood that is used to help fix another piece, or it refers to the lengthwise boards of a battened door (see page 93, Con).

- BEVEL: A sloping edge; the edge of a piece which is cut off so the angle is no longer 90 degrees (see page 72, BK).

- BOND: This refers to the arrangement of blocks in a wall, in Rural Building usually a half-block bond (see page 8, BK).

- BRACE: A piece added to a construction to make it stronger or more stable.

- BUILDING UNIT: This is usually used with reference to blocks to specify the measurement of a block in the wall, including the thickness of one cross joint and the bed joint (usually 2 cm) (see page 4, BK).

- CAST: To pour concrete into a mold so that it hardens to a particular form.

- CAST-IN-SITU: This means that the concrete member is cast in its permanent position (page 170, BK).

- CHAMFER: An edge which is cut to a 45 degree angle; this is a special kind of bevel (see page 72, BK).

- CLEARANCE: Free space; or space to allow movement between parts.

- CLENCH: To secure a nail by bending the point over where it comes through the piece of wood (see page 94, BK).

- CONCAVE: This describes a surface which is hollow or curved inwards.

- CONCRETE: This is a mixture of sand, stones, cement and water which hardens into a rock-like substance (see page 166).

- CONVEX: This means that a surface is curved outwards, like the outer surface of a ball.

- COUNTERSINK: This means to enlarge the top of a screw hole so that the head of the screw will be flush with the surface (see page 96, BK).

- COURSE: This refers to a horizontal layer or row of blocks in a wall, including the mortar bed (see page 2, BK).

- CROSS-GRAINED: The wood fibres do not run parallel to the length of the piece of wood, so it is difficult to work with the wood.

- CURING: This refers to the process of hardening for any product which contains cement. The piece must "cure" for a period of days or weeks before it is ready to carry out its function.

- CUTTING ANGLE: The angle to which a cutting edge is shaped (see page 91).

- DIMENSIONS: The measurements of the length, width, and height of an object.

- END GRAIN: The end surface which is exposed when wood is cut across the grain (see page 72, BK).

- FACE SIDE OR FACE EDGE: This is the first side or edge to be prepared when wood is planed for use in a work piece, usually the best side or edge (see page 84, BK).

- FLUSH: When we say that two surfaces are flush, we mean that they are in the same plane, they form one flat surface together.

- FOOTINGS: These are the first courses of flatwise blocks which are laid on top of the foundations (see page 36, BK; also page 43, Con).

- FORMWORK: This is the wooden structure which holds and supports the concrete pieces while they are being cast (see page 170, BK).

- FOUNDATIONS: The solid base, usually concrete, on which the building rests. It is the only part of the building which is in direct contact with the ground (see page 15, Con).

- GAUGE: A measure, a means of comparing sizes (for example, see pages 13 and 39).

- GRAIN: The natural arrangement of the wood fibres (see page 72, BK).

- GRIND: To polish or sharpen by rubbing on a rough hard surface (see page 95).

- HEADER: This is a block which is placed in a wall in such a way that the smallest face is exposed (see page 2, BK).

- HONE: To give a final polished keen edge to a tool by rubbing it on the smooth side of a sharpening stone (see page 99).

- KERF: The cut made by a saw blade.

- LANDCRETE BLOCKS: This is a mixture of laterite soil, cement and water which is pressed into blocks in a landcrete block machine (see page 2, BK).

- LEVEL: A line or surface which is parallel to the horizon; horizontal. This can also refer to the tool, the spirit level (page 5) which is used to determine whether a surface is level.

- LINTEL: The wooden or reinforced concrete member which bridges the opening of a door or window at the top (page 164, BK).

- MARKING OUT: This means to make marks on a surface to show where later operations have to be carried out; for example marking out joints on frames or marking out foundations on the ground.

- MILD STEEL: This is the same as iron. Hardened steel is iron which has been hardened by a special process.

- MITRE: This refers to a joint where the two pieces are cut at a 45 degree angle so that they form a corner where the connection between them bisects the angle of the corner (see page 98, BK).

- MORTAR: A mixture of sand, cement and water which is used to form the joints between blocks; or as plaster or render, depending on the proportions of the mix (see page 158).

- MORTICE: A hole which is cut in a piece to recieve the end of another piece (see page 104, BK).

- PLASTER: The mortar layer which is applied to the inside walls of a building to make them smoother and more durable (page 174, BK).

- PLINTH COURSE: This is usually one course of edgewise laid sandcrete blocks which is laid on top of the footings (see page 36, BK).

- PLOT: An area limited by certain boundaries, it may contain one or more building sites (see page 140, BK).

- PLUMB: Vertically straight, perpendicular to the horizon.

- PRECAST: This means that the piece is cast beforehand and set into into its permanent position after it is hardened (see page 170, BK).

- PREFABRICATED: This means that the piece or part of the building is made ready before it is installed in its final position in the structure. In Rural Building we usually mean those things which are manufactured on the site such as doors, casements or frames. We also call this "ready-made".

- QUOIN: The outside corner of a wall (see page 26, BK).

- REBATE: A step-shaped rectangular cut in the edge of a piece (see page 72, BK).

- REINFORCE: To make something stronger by adding another material, for example the iron rods which are sometimes used to make concrete pieces stronger (page 171)

- RENDER: The mortar layer which is applied to the outside of the building to make the walls water resistant so that the blocks are not destroyed by rain (see page 174, BK).

- RIGHT ANGLE: A 90 degree angle.

- RIPPING: This means cutting a board along the grain, using a saw (page 45).

- SANDCRETE BLOCKS: These are blocks made with sand, cement and water, shaped in a sandcrete block machine (see page 2, BK).

- SCALE: In a drawing, this means the relation between the size of the drawing and the actual size of the object which is drawn; for example a building may be drawn in a scale of 1:100 (cm), which means that 1 cm on the drawing represents 100 cm in the actual building.

- SCREED: This refers to a strip of mortar which is laid on the wall to act as a guide during plastering (see page 176, BK); we also talk about floor screeds, by which we mean the 2 cm mortar layer which is laid on top of the base layer during floor construction (see page 179, BK).

- SETTING OUT: Marking the dimensions of an excavation with pegs and lines, or marking the positions of the walls on the footings, etc., sometimes called lining out.

- SHUTTERING: This means the parts of the formwork which are in contact with the cement (page 170, BK).

- SITE: This is the piece of land on which a building is made; a plot of land can contain one or more building sites (see page 140, BK).

- SOFFIT: This refers to the under-surface of a piece; in a concrete form, the bottom board of the shuttering is called the soffit board.

- SPECIFICATIONS: This means a detailed description of something.

- SQUARE: By this we usually mean that a piece has all its sides at right angles to each other, or that all the angles are right angles; or it can mean a rectangular surface where all the sides have the same length.

- STRETCHER: This means a block which is laid so that one of the long faces is exposed (either the top face or a long side) (see page 2, BK).

- STRUTTING: These are the supports which hold the shuttering in place when the concrete piece is cast (see page 170, BK).

- TAPER: This means that something is thinner at one edge than at the other.

- TRUE: This is a description meaning that a surface is completely straight and flat.

- VENTILATION: The air movement in and out of a room or area.

- WARP: This is any change of shape in a piece of wood which is caused by uneven shrinking or expansion (see page 132).

- WEDGE: A piece, usually V-shaped, which is used to hold other pieces under pressure, usually to hold pieces together as for example the handle and head of a hammer are fixed together by wedges (see page 41).

NPVC

Deutsche Stiftung für internationale Entwicklung
German Foundation for International Development

DSE

Udo Bude & Keith Lewin (eds.)

Improving Test Design

Vol. 2 – Assessment of Science and Agriculture in Primary Schools in Africa; 12 Country Cases Reviewed

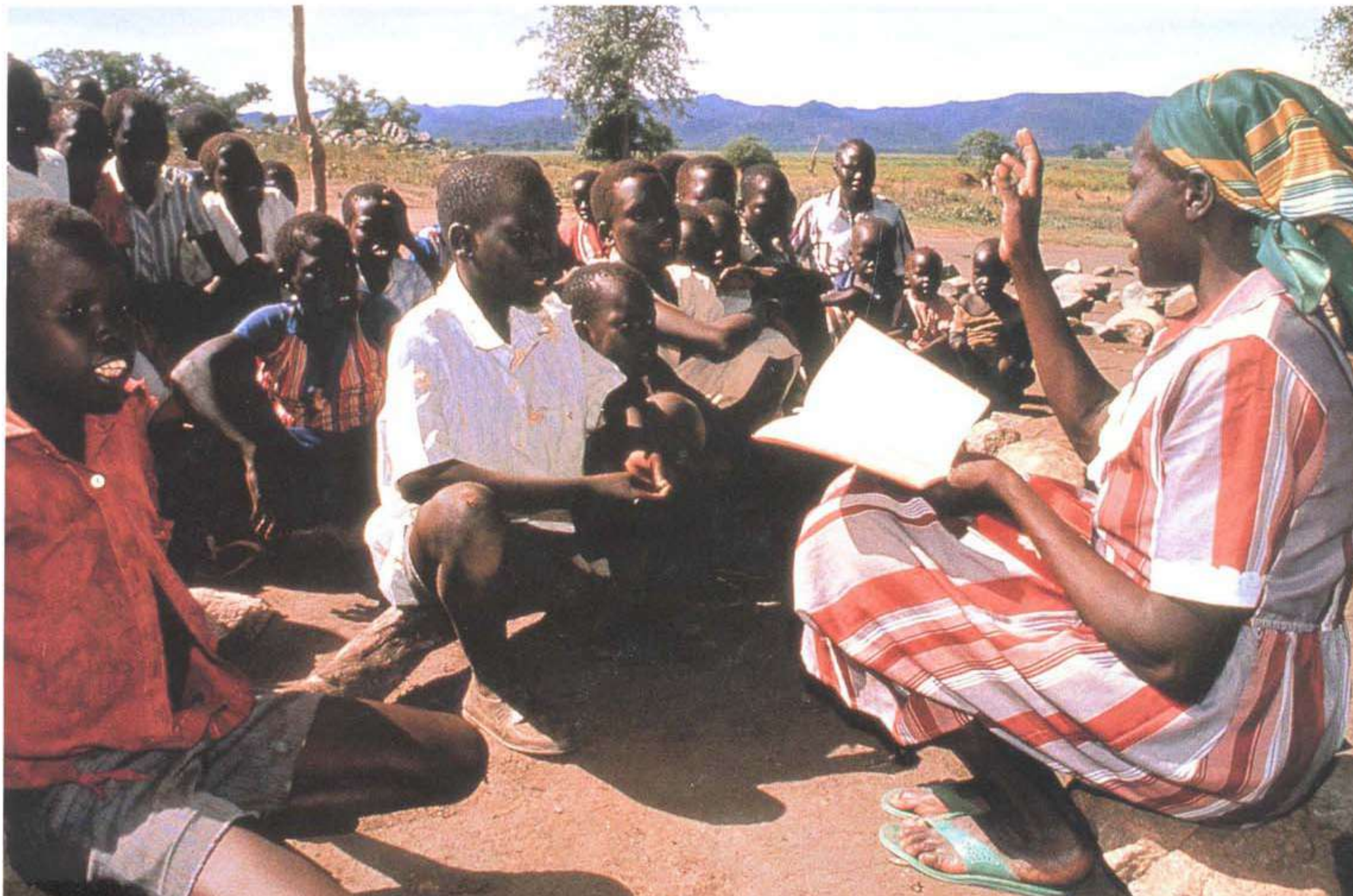

Education, Science and Documentation Centre (ZED) – Bonn

Cover photo: Gérard Klijn/present

Udo Bude & Keith Lewin (eds.)

Improving Test Design

Vol. 2 - Assessment of Science and Agriculture in Primary Schools in Africa; 12 Country Cases Reviewed

- **Country Reports**
- **Examination Papers**
- **Follow-up Communications**

Impressum

published by:
Deutsche Stiftung für internationale Entwicklung (DSE)
German Foundation for International Development
Education, Science and Documentation Centre
Hans-Böckler-Str. 5
D-53225 Bonn

editors:
Udo Bude/Keith Lewin

editorial work & typesetting:
txt redaktionsbüro ebert & schmid, Lünen

printed by:
Druckerei Brandt GmbH, Bonn/1997

DOK 1789 a
ISBN 3-931227-27-8 (complete edition)
ISBN 3-931227-29-4 (Volume 2)

Table of Contents

1. Introduction

Udo Bude & Keith Lewin

As a follow-up to the World Conference on Education for All in 1990 several countries in southern and eastern Africa started analysing and revising their examination systems with the ultimate aim of improving the quality of teaching/learning. Examinations in countries of the region are a well established feature of the educational systems reaching back to colonial days. The achievements of pupils during the primary school cycle are in most cases tested in end-of-cycle examinations, whereby the performance of a pupil is tested in comparison with other pupils sitting the examination (norm-referenced tests). Such assessment procedures do not provide the full picture and fail to deliver sufficient information about the success of an education system in imparting those skills and competencies as laid down in the curricula.[1] In order to find out how proficient a pupil is in a particular subject, concept or skill without referring to other norm groups of pupils a different approach is required. This may have several elements which include greater use of school based assessment, evaluation of project work and techniques of continuous assessment. It may also seek to define competencies in terms of criterion statements against which performance can be judged. Criterion-referenced assessment is attractive since it sets standards that do not depend on the performance of other pupils and should provide reliable data on what has been achieved during the primary school years. Some countries in the region e.g. Botswana and Swaziland are already experimenting with this kind of approach to assessment.

[1] See Kellaghan, Th. & Greaney, V. (1992) Using Examinations to Improve Education. A Study in Fourteen African Countries. World Bank Technical Paper No. 165. The World Bank, Washington D.C.

Applying more comprehensive concepts of assessment is a significant step towards the improvement of the quality of teaching and learning. National examination systems are mostly designed to judge the individual pupil's achievements for selection purposes and to deliver comparative information about the performance of individual schools and regions. They are often an unreliable guide to actual levels of achievement.

Three aspects have to be taken into consideration when constructing most forms of assessment instruments:

(1) the validity of assessment instruments (do they measure what they claim to be measuring? do they predict future performance adequately if they are to be used for selection?);

(2) their reliability (do they work a consistent measure of performance which could be repeated with similar results? are measurement errors reduced to acceptable levels?);

(3) their technical efficiency (is the system secure, cost-effective, or as appropriate time scale, free of bias towards or against different groups of candidates?).

For most pupils in the region primary education ends after seven to eight years with a national examination. The more selective such examinations are the greater is the attention and importance given by society, because the results of such annual exercises determine significantly the future of many children and the hopes and ambitions of many parents for their offspring.[2] The outcome of the examinations also have severe repercussions on the schools on learning and teaching methods, and on the teachers' role in local communities and within the education system (see box: »Vihiga plan« is the way out/Fortunes change for Kikuyu).

[2] See Dore, R. P. (1976) The Diploma Disease. Unwin Education. London.

EAST AFRICAN

Standard

Established 1902

COMMENT

'Vihiga plan' is the way out

PARENTS in Sabatia Division of Vihiga District have embarked on an ambitious programme to improve education standards in the area.

Part of the master-plan lies in setting up an in-service training centre for secondary and primary school teachers and their deputies. Those who attended the leaders' meeting on how to improve education in the area made proposals of providing lunch to all examination classes in future.

However, whereas there is no so much novelty in advocating for managerial skills for headteachers, or even starting schools' feeding programme, it is important that parents are ready to initiate the scheme on a harambee basis.

Going by the results of the last year's Kenya Certificate of Primary Education (KCPE), one can just understand the urgency of having efforts to improve education in Vihiga. Out of 56 districts and municipalities, Vihiga was number 41.

By all standards, those results were not rosy, but perhaps the most important aspect is that parents are prepared to reverse the situation.

But even then, they are throwing a big challenge to the Ministry of Education and the Teachers Service Commission (TSC) whose responsibility is train and appoint of headteachers.

In the past, appointment of headteachers in both primary and secondary schools has been done in total disregard of experience and competence of headteachers and their deputies. Poor supervision of schools added to the problem.

As the leaders' meeting at Vokoli Girls Secondary School noted, there is paucity in supervision of headteachers, who more often become their own masters and oppressors of parents and other people who refuse to toe the line, or who question their decisions.

It is also important for the Ministry of Education to acknowledge community based programmes, and support them.

Fortunes change for Kikuyu

By STEPHEN [illegible]

The performance of the Kenya Certificate of Education has greatly improved in Kikuyu Division, according to the local educational officer Alan [illegible].

He said the division which used to come last out of seven in the district was now number three.

Kikuyu came third after Lari and Githunguri in last years KCPE results.

Addressing a prize-giving ceremony at Kikuyu Township Primary School recently, the officer [illegible] teachers, pupils and parents to work harder to get better results.

The remarking of [illegible] Gitau Primary School KCPE papers elevated it up from 110th to fourth position with a mean score of 420 marks in the district's 209 schools.

The Zonal Inspector of Schools, Mr James [illegible] and the Teachers Advisory Centre (TAC) tutor, Mrs Magdalene Kiambuthi, praised teachers for their work which had enabled Muguga to produce six of the top 10 schools and also six of the top 10 pupils in the district.

Kabete produced the best candidate in Samuel Munyua from Mahia-ini Primary School.

Daily Nation 4/3/95

Tuesday, February 28, 1995

Despite the great attention paid to matters of testing and examining at the end of primary education, the examination results rarely provide sufficient information on the effectiveness of the educational system to make confident judgements on educational quality and learning problems. If we are interested in influencing the teaching-learning process in the classroom positively we may have to start with improvements in the ways pupils are assessed. This can indicate what is not being understood and assimilated, and can point the way to strategies to improve levels of achievement.

Any assessment system provides opportunities for teachers, pupils, and educators (e.g. curriculum developers, examination-/testing specialists) to monitor progress and learn from failures as well as successes. However, if large parts of examinations consist mainly of straightforward recall questions where pupils are simply asked to reproduce from memory, opportunities for a more comprehensive assessment of learning outcomes are lost and much teaching will follow objectives narrowly defined by a restricted range of questions. The mere recollection of facts or names does not give any hint of the pupil's problem-solving skills, often so strongly emphasized in the primary school curricula as essential outcomes of learning. Repetition of whole sections from textbooks fails to indicate whether learners are able to apply their knowledge and skills to different situations. Poorly constructed multiple-choice tests leave much space for guess work and may encourage rote learning. They need to be replaced by a broader concept of assessment testing more complex cognitive processes. Consequently, the first step in a reform of conventional examinations is to analyse existing tests in terms of whether and to what extent they contain items requiring higher-order thinking and application. The next step is to develop or improve test items which examine pupils' abilities to apply what they have learned to less familiar situations and problems or which require them to link events or facts to each other in a consistent way.

The development and design of test items is mainly the domain of examination specialists and/or curriculum developers. The work of all those involved in examinations should, but often does not, include a strong research component in order to find out what kind of assessment procedures deliver the most valid and reliable results efficiently and have the greatest positive influences on classroom teaching. Educationists responsible for the design and analysis of national examinations in eastern and southern Africa are trying hard to improve their assessment systems and to answer the challenges of new ideas and requirements.[3] During recent years new subjects were added to previous core subjects, i.e. like Languages and Mathematics. In many primary school systems History, Geography and Civics or Social Studies have been included, along with science based subjects like Science, Agriculture, Environmental Science, Home Economics. Most or all now feature in the national examinations. Writing meaningful tests for the more practical subjects which go beyond recalling facts requires familiarity and experience with the respective school curriculum as well as with the possibilities and limitations of different types of assessment. Often the demanding curriculum objectives of subjects like Science or Agriculture are not easily tested in an appropriate way. Developing test items assessing pupils' understanding and application of knowledge and skills to new situations require sophistication in constructing assessment instruments even where testing is restricted to multiple-choice questions for reasons of cost and administrative feasibility.

[1] See Njabili, Agnes F. (1993) Public Examination: A Tool for Curriculum Evaluation. Mture Publishers, Dar-es-Salaam.

Education experts responsible for revising national examinations to improve the quality of education can learn from the approaches adopted to reform in different countries in the region, particularly in the following areas:

- widening the range of skills tested and the instruments used;

- redesigning examination items to include more which test skills of higher-order thinking;

- gradually shifting the basis of testing from a norm-referenced to a more criterion-referenced system (measuring pupils' success or failure in relation to criteria which represent competencies independent of the performance of other pupils);

- considering the possibilities for introducing continuous assessment alongside or instead of terminal examinations, and using pupils' records and

- profiles which can reflect the acquisition of demonstrated competencies of a wider range of different types than can conventional examinations.

One country in the eastern and southern African region has over many years spearheaded new developments in using national examinations for monitoring and meaningful assessment purposes. Kenya started reforming primary education examination in 1974 with the declared aims of making the examination more relevant, improving the quality of education and ensuring greater equity in the access to secondary schools. Two major strategies for reform were employed; changing the content of the examination papers, and introducing an information-feedback system. »It was hoped that changes in the questions set would make the CPE more relevant as a leaving examination, more equitable to pupils in less-privileged socioeconomic groups, and more reliable as a selection instrument. The introduction of an information-feedback system would, it was hoped, do something to improve the overall quality of the primary school system and to reduce quality differences between high performing and low performing schools.«[4]

[4] Somerset, Anthony (1988) Examinations as an Instrument to Improve Pedagogy. In: Heyneman, Stephen P. & Fägerlind, Ingemar (eds) University Examinations and Standardized Testing - Principles, Experiences and Policy Options. World Bank Technical Paper No. 78, Washington D.C., pp. 171-194, p. 174

The experience and expertise developed in Kenya over nearly twenty years is therefore very relevant to the present discussion on revising national examination systems in other countries of the region. The Kenya Certificate of Primary Education can serve as an example of possibilities and as entry point to become acquainted with assessment techniques at the end of primary school in the subjects SCIENCE and AGRICULTURE, and for monitoring primary schools in general.

The success of the reform of the primary school examination system has not been achieved without problems. Over the years Kenya has become more and more »exam-ridden«. The results of primary or secondary school examinations receive more and more public attention. Even to the extent that candidates' results are announced over public radio! Regions and school districts compete vigorously to top the lists in the national examinations, very often to the disadvantage of pupils who are unlikely to score highly and those who succeed but do so as a result of long hours of repetitive 'cramming'. The incentives to cheat and find illegal means to pass the test have also created many problems. Heavy emphasis on examinations leads to a neglect of the broader pedagogical tasks of the schools. The school curriculum may be only taught according to the importance of examination subjects and other aspects of the national examination ignored. The »examination tail is wagging the curriculum dog«! John Keeves reminds us of the real purpose of national examinations, »There is little doubt that a national examination has a substantial influence on the teaching that occurs in schools not only during the year at the end of which the examination is held, but in all years that have gone before... it is important that the examinations should have beneficial effects on the teaching and learning that takes place at all earlier stages of schooling«[5]

[5] Keeves, John P. (1994) National examinations: design, procedures and reporting. UNESCO: IIEP, Paris, p. 98.

The design and conduct of national examinations is therefore not an affair of one group of specialists alone. Examination specialists, curriculum developers, psychometrists and teachers have to cooperate to maximize the beneficial influence of the examinations on practical teaching and avoid excessive testing and examination preparations in the schools. Despite all good intentions on behalf of those setting the national examinations it seems to be extremely difficult to prevent examination »fever« once such examinations have gained too much importance in society as the means through which credentials are obtained, promotion through the school system rationed, and jobs in the labour market allocated.

The manual on IMPROVING TEST DESIGN tries to assist those educationists who are responsible for the design, conduct and control of national examinations in developing higher quality assessment instruments which can provide better information on pupil achievement, a fairer basis for selection, and influence learning and teaching to improve educational quality. It can also be used as a kind of source for training those assisting in the development or processing of examinations. The manual consists of two parts:

Volume 1: Constructing Test Instruments, Analysing Results and Improving Assessment Quality in Primary Schools in Africa,

Volume 2: Assessment of Science and Agriculture in Primary Schools in Africa; 12 Country Cases Reviewed.

Both volumes are the result of two pilot training workshops in Kenya dealing with the development of test items for Science, Agriculture, and Environmental Science and the use of national examinations for improving the quality of primary education. These workshops were jointly organised and conducted by the German Foundation for International Development (DSE), Education, Science and Documentation Centre, and the Kenya Institute of Education (KIE) in cooperation with the Kenya National Examinations Council. Participants came from different countries in eastern and southern Africa. Each country invited was asked to nominate one curriculum developer and one examination specialist, thus guaranteeing that the curriculum aspects for Science, Agriculture, Environmental Science were equally considered with the examination requirements.

Volume one deals with the practical aspects of test construction, analysis and the improvement of assessment procedures. In addition Prof. Keith Lewin (University of Sussex) takes up some of the theoretical aspects, especially the possibilities and limitations of criterion-referenced assessment and test development in general. The practical exercise on developing and administering tests draws to a large extent on the experiences with assignments carried out during the second training workshop in Kenya, where participants designed test items, conducted tests in primary schools and analysed the test results in groups. The experiences of twenty years of examination reform are presented in two analyses authored by education specialists from the Kenya National Examinations Council and the Kenya Institute of Education. Finally, abstracts and papers are documented indicating the discussion and direction of examinations and test constructions in eastern and southern Africa.

Volume two starts with an account and analysis of the present situation regarding primary school leaving examinations of countries in the region. Detailed information for each country is provided in a tabulated overview illustrated by original examination papers in Science, Agriculture and Environmental Science mainly from 1993 and 1994. In few countries Science and Agriculture feature only as part of a larger »General Paper«. In these cases the items covering Science or Agriculture have been included in the documentation. South Africa and Namibia are also included, although presently they have not yet started end-of-primary examinations, but discussions on the composition and design of examinations are in progress. Furthermore, examples of follow-up communications after the examinations from different countries are presented.

2. End of Primary School Examination in Eastern and Southern Africa - An Overview

Udo Bude

The evaluation of pupil's learning achievements is an essential part of the school curriculum. However, methods and scope vary among and within countries. Information on how schools and teachers carry out their tasks as suggested in curricula is of great importance to educational planners, curriculum developers and examination specialists in ensuring acceptable standards of attainment and in guiding the improvement of the quality of education.

In most countries of eastern and southern Africa the dominant tradition is to use formal examinations as a means of assessment at both individual and school level. Very often such examinations consist of a mixture of aspects of assessment procedures inherited from colonial systems mixed with recent developments in assessment methods. In the following chapter we will focus on examinations taking place at the end of primary schooling in the region. Children finish their first school cycle after seven or eight years. They are expected to sit examinations that test mainly their knowledge and skills in Languages and Mathematics, and in a range of subjects ranging from History and Geography to Religion, Science and Social Studies. Sometimes Science is a separate subject, in other cases it is examined with one or more others.

Tests in Education

Formal examinations and tests have not always been a part of education. The first formal examination in a university occurred at the University of Bologna in 1219. Oral exams were a part of the European university systems from the middle of the seventeenth century, and in 1803 formal written exams were introduced at Oxford University. The efforts of Joseph M. Rice in the late 1800s were instrumental in establishing standardized tests as part of the American educational system. Rice was trained as a physician, but he spent most of his professional life developing tests to assess educational achievement. Another significant figure in the history of educational tests is E.L. Thorndike. In the early 1900s Thorndike and his students at Columbia Teachers College contributed tests of arithmetic, handwriting, spelling, and other academic abilities. Today, routine achievement tests are a part of virtually every academic endeavor.[1]

Note: Achievement tests were already applied over 2000 years ago in China. Candidates had to pass a public examination for the entry into the Chinese Imperial Service.

[1] Graham, John R./Lilly, Roy S. (1984) Psychological Testing. Prentice Hall, Englewood Cliffs, New Jersey, USA, p. 6.

The primary school leaving examination is usually only the first of a series of examinations that take place throughout the educational system. But even at the age of twelve to fourteen such an examination determines the future of many children and is also valued by many communities as an indicator of teachers' abilities and of school quality. Consequently, teachers as well as pupils put great effort into the preparations for the examinations, the more so because in most countries only the results in the final examination count for certification and selection for secondary school.

Examinations have a tremendous influence on classroom instruction, particularly in the years immediately preceding the end of primary school education. Where there are hardly any paid jobs available after primary school and secondary places are limited, the competition to enter secondary schools becomes more and more intensive and the all important terminal examination the centre of attention. In the end the backwash effect of this examination may penetrate the whole primary education system. Not surprisingly, one even finds teachers in standard/class 1 of primary schools trying to encourage pupils to practise multiple-choice questions once their pupils have learnt to master the very basics of the 3 Rs. In some countries formal tests are even being arranged in kindergartens.

Teachers know that they have to assess their pupils to build up a detailed understanding of each student's strengths and weaknesses. Without such formative knowledge teachers cannot be in a position to help and to assist. Summative testing is also valued and seen as an indispensible part of teaching allowing overall judgement on the successful attainment of educational objectives. Teachers often question why such testing cannot be left completely to them. One reason is designing meaningful and valid tests is not an easy job. If simple »pencil-and-paper« tests are conducted by teachers as the only means of assessing pupils' performance this will not do justice to the complexity of the learning objectives set out in the curriculum. Nor is it likely to be technically sound as a valid and reliable measurement given that few teachers are adequately trained in test design and many have no formal training at all.

Furthermore, there is concern that over reliance on teacher set tests may undermine balanced teaching of the curriculum because teachers may give undue emphasis to some parts while neglecting others. In the end those parts of the total school curriculum which are tested may be the only parts that are taught, and each teacher may value different topics.

Examinations rarely cover the full range and depth of the curriculum prescribed for the different subjects. Thus, what should have been learned is only partially examined. In many countries in eastern and southern Africa the examination questions set over the years come to define the school curriculum in the last two years of primary school in a narrow and stereotyped way.

»Teaching to the test«

Examinations and testing programmes have grown and multiplied with the expansion and diversification of participation within education systems and probably also as the consequence of an increasing demand for information on the development of 'human resources' in the wider economy and society. Most of them have probably not been specifically designed to help improve learning as such, but simply to verify or 'assess' whether the student has certain knowledge, values and attitudes, skills or capabilities. Both of the two main types of assessment information -criterion-referenced (can X and Y do Z?) and norm-referenced (can X do better than Y on Z?) - are clearly in demand though for different purposes. Within education systems, in cases where resource constraints require that only a limited number of individuals within a given reference group (e.g., a cohort or class) be selected for particular courses of study, the demand is for norm-referenced information; when teachers simply need to know if students have acquired prerequisite knowledge and skills before progressing to more advanced stages of learning, the demand is for criterion-referenced information. In both cases the student is challenged to perform a certain task or tasks, and there is little doubt that the prospect of such a challenge can provide a stimulus to learning. Indeed, the major end-of-cycle public examinations in many countries often are the cause of anxiety and even anguish among parents as well as students because they are so determining for life chances.

If, as is common, the knowledge and skills assessed by examinations are the ones that teachers, students and parents concentrate on to the exclusion of what else is in the curriculum, then there occurs the biggest single unwanted side-effect of external assessment. Proponents of 'measurement-driven' or 'assessment-led' instruction have argued that if 'teaching to the test' produces higher test scores, then at least some learning has occured. Critics have questioned whether those higher test scores represent useful and enduring learning which will convert into future achievement -as opposed, say, to mere memorization of facts which are quickly forgotten. Despite the amount of testing going on in the world, many scholars probably would agree that there still is very little known about whether preparing for and taking tests actually causes useful and enduring learning to occur.[2]

[2] from: UNESCO (1991) World Education Report, pp. 82, 83

The heavy reliance of developing countries on external examinations is in great contrast to experiments in some European countries aimed at abolishing formal examinations at primary school level and replacing them by more formative, school-based and pedagogically integrated assessment. In Switzerland, for example, an experimental project has started where children's progress was regularly evaluated through diagnostic methods (see Box). Such a demanding approach, however, requires teachers with sufficient professional experience and a thorough academic and pedagogic background.

> In Switzerland, interesting experimental work is taking place which appears to have general applicability to the problem. Research there and elsewhere has shown that the traditional evaluation of pupils' performance often fails to achieve its objectives. Commonly, it does not help the pupils to improve, it does not accurately inform parents of their child's progress, and it does not give sufficient information to educationists to enable them to plan the child's educational future. Difficulties arise partly because the main function of marking is not clear; there can be no single all-purpose mark that is simultaneously predictive, a credentialling device, and a diagnostic tool, but that is what teachers have tried to employ. In primary schools, the process of assessment is also sometimes distorted by marks being used to punish or reward. In addition, teachers find it difficult to transform a record of under-achievement into a prescription for remedying it.
>
> The Swiss research indicates that while formal evaluation instruments and data banking have a role to play, the main solution lies elsewhere. Thus, in one experimental project, teachers were encouraged to prepare their own diagnostic tests, and marks were not given though mistakes were carefully analysed and explained to the pupil. Twice a year remarks, not grades, were entered in parents' notebooks giving an account of the child's progress. Each June an evaluation of the whole year was noted in the pupil's record. Teachers recorded the achievement made during the year but there was no comparison between pupils - in other words, the purpose of this evaluation was diagnostic not rank-ordering. Surveys showed that parents and teachers favoured the new evaluation despite the work load involved, but there was a clear need for teachers to receive more training with a view to encouraging them to discard their old ideas about marking, and to develop their skills in being more precise about objectives and in the construction of their own diagnostic materials. The great advantage of this evaluation project has been the emphasis on the professional expertise of the teachers and their need to communicate more effectively both with pupils and with their parents. At primary level, it has been considered appropriate to give the diagnostic function of evaluation priority over the other functions.[3]
>
> [3] OECD (1989) Schools and Quality. An International Report. Paris, p. 102

Such well-trained professionals are, under normal circumstances, not available in developing countries and their lack would easily jeopardize such an approach.

Investigation of the end of primary school examinations in the Africa region reveals that most of the countries have started reforming their examinations in recent years, particularly since 1990. Countries are well aware of the limitations of examination systems that depend heavily on multiple-choice tests. There is a great need and demand for reviewing and redesigning the written examinations to reduce simple recall items to a minimum and include more items that test higher cognitive skills. The latest trends include:

- experiments with continuous assessment, and
- introduction of more criterion-referenced tests.

Swaziland has been experimenting with continuous assessment in primary schools for three years. The trials cover English and Mathematics and are intended for the full primary school cycle (up to Std. VII). Criterion-referenced tests were introduced to assess the performance of individual pupils. The trial programme aims at improved quality of teaching and hopes to reduce repetition and dropout rates. At the same time it is planned to extend the primary basic education cycle from 7 to 9 years with a final examination at the end of Std. IX. The major constraint to the implementation of continuous assessment is the low level of teachers' training. The introduction of forms of continuous assessment in the primary education system is also envisaged in Uganda. However, Uganda's Examinations Board is aware of the problems involved, especially of the need to sensitize and train teachers thoroughly and to establish spot-checks and controls at local level. In addition a national assessment exercise is planned every two years to determine country-wide levels of performance (to find out about rising or falling standards).

Lesotho's experiences with continuous assessments have had less success. The trials did not encourage a general country-wide introduction. Teachers were unable to handle the assessment instruments correctly. Children were promoted without ensuring appropriate learning outcomes. Thus, the usual end of primary school examinations have been retained.

Because of the limitations of the norm-referenced testing system Botswana began in 1992 to experiment with criterion-referenced testing. It is hoped that a shift from the present testing strategies to criterion-referenced testing will ensure that the examinations mirror the aims and objectives of the primary school curriculum more closely. The new examination will be supplemented by a process of continuous assessment.[4]

[4] See: Ministry of Education, Department of Curriculum Development and Evaluation, CRT Implementation Committee (1992) Criterion-referenced Testing. Rationale for Implementation. Republic of Botswana.

End of Primary School Examinations in Eastern and Southern African Countries												
Country	Title	Institution setting examination questions	No of pupils sifting exam in 1994	No of subjects tested	No of papers in exam	Language of exam (except language papers)	Items pretested		Year of latest exam reforms	Children's entry age in primary school	Duration of primary school	Amount of fees charged (in US$)
							yes	no				
Botswana	Primary School Leaving Examination	Dept. of Curriculum Development & Evaluation, and Examinations, Research & Testing Division	36,158	5	5	English	X		1991	7	7	-
Kenya	Kenya Certificate of Primary Education	Kenya National Examinations Council	395,765	14	7	English		X	1985	6	8	4.5
Lesotho	Primary School Leaving Examination	National Curriculum Development Centre	31,396	8	5	English	X			6	7	2
Malawi	Primary School Leaving Certificate Examination	Malawi National Examinations Board	103,833	11	8	English		X	1995	6	8	
Swaziland	Swaziland Primary Certificate	Swaziland Examinations Council	17,888	9	11	English	X		1970	6	7	10
Tanzania	Primary School Leaving Examination	National Examinations Council of Tanzania	384,762	9	3	Kiswahili		X	1994	7	7	-
Uganda	Uganda Primary Leaving Certificate Examination	Uganda National Examinations Board	162,695	6	4	English	X		1983	6-7	7	2
Zambia	Grade 7 Composite Examination	Examinations Council of Zambia	179,148	6	5	English	X			6-7	7	1
Zanzibar	Form 1 Entrance Examination	Ministry of Education, Dept. of Higher, Science & Technical Education	7,189	9	?	Kiswahili		X	1993	7	7	-
Zimbabwe	Grade 7 Examination	Examinations Branch, Ministry of Education and Culture	306, 706	6	4	English	X		1990	$5^{1/2}$-6	7	-

Note: Namibia and South Africa have not been included. In Namibia presently examinations only take place after junior secondary school (class 10); primary school examinations are planned for 1997. In South Africa the Independent Examinations Board, a non-governmental organisation, offers national examinations since 1994 for Std, VII leavers. Common exams are also set by the Provincial Departments of Education.

Zambia is the only country in eastern and southern Africa which includes in the Grade VII Composite Examination at the end of the primary education two papers testing verbal and numerical reasoning. In English and Mathematics pupils are asked to answer 50 questions for each subject. The multiple-choice items can be answered in 60 minutes for English and in the same time for Mathematics.

Tanzania has seen changes in the structure of the primary school examination over the last years. For reasons of examination security the country used to be divided into different zones, controlled centrally from the capital. From previous five zones in 1990 the »examination zones« were gradually reduced to two in 1993. For each examination paper different versions are produced according to the number of existing zones by the National Examinations Council. Since 1994 Tanzania has produced only one set of examination papers for the whole country. This development was accompanied by the creation of examination centres in the regions and the compulsory presentation of candidates' photographs for identification purposes.

The number of subjects tested in the end of primary school examinations in the different countries of the region range from 14 (Kenya) and 11 (Malawi) to 6 (Uganda, Zambia, Zimbabwe) or 5 (Botswana); 8 subjects are tested in Lesotho and 9 in Swaziland and Tanzania, including Zanzibar. However, these subjects do not necessarily feature in the examinations with papers of their own. Only the main subjects, like Languages and Mathematics appear as separate papers, all others are presented in combination with other subjects. The general impression prevails that the greater the number of subjects combined in one paper, the smaller the range of the subject's curriculum covered in the test. Zimbabwe e.g. tests three subjects in a combined General Paper (Religious & Moral Education/Social Studies/Environmental Science) with the result that the whole curriculum of each subject has to be reflected with 15 or 20 questions!

Pupils in all parts of the United Republic of Tanzania receive their examination questions in the national language Kiswahili, and can answer in the same language. In all other countries of the southern and eastern African region English is used as the official language, English is required for understanding and answering the tests. Only the papers in the local/regional language subjects use the respective languages as the medium of education and assessment.

The test items for the different subjects are either developed by national examination boards or councils or by national curriculum centres. In Lesotho the national curriculum centre is responsible for setting the examination questions. All other countries of the region charge the national examination boards or councils with this task. Over the years different procedures for setting the examination questions have emerged. As a rule, specialists from different educational institutions like curriculum development centres, examination boards, teacher training colleges, universities and sometimes practising teachers etc. are invited to forward sample items which are later moderated by specialists, sometimes trial tested and analysed and finally compiled for the annual examination paper. Nearly all countries try to involve experienced primary school teachers and inspectors at this stage. Only Malawi and Tanzania refrain from using practising primary school teachers' experience for the design of test items.[5] Half of the countries appear to analyse pre-test results in the development of items.

[5] See also table 2: Groups involved in setting examinations.

CRITERION-REFERENCED TESTING	NORM-REFERENCED TESTING
ADVANTAGES	
• Fair and informative to students, parents, and educators. • National educational progress may be evaluated meaningfully in terms of increased achievement. • Career guidance information can centre on specific abilities fostered by the curriculum. • Diagnosis of individual's deficiencies in relation to curriculum objectives is more possible. • Meaningful curriculum-based continuous assessment of students that are comparable from school to school are possible.	• Readily reflects the achievement of each examinee in relation to the norm group. • Smaller samples of content can provide sound comparisons of student's relative achievement, provided large samples of students are used. • May promote student competition and competition between schools that is based on relative standing in the norm group.
DISADVANTAGES	
• Student achievement is not so easily compared. • Smaller samples of content provide weaker generalisations about a student's performance in the curriculum domain. • May discourage student competition that is based on relative standing in a norm group.	• Fair but less informative regarding what levels of achievement were attained. • National progress may be evaluated but comparisons over the years are difficult. • The information obtained may be less helpful to target in-service training to specific aspects of the curriculum. • Diagnosis limited to broad areas of curriculum (e.g. Math vs English) and in terms of a student's curricular strengths relative to other students in the norm group. • Curriculum-based continuous assessments are less meaningful and limited to relative standing in the local classroom.
Note: Adapted from Ministry of Education, Department of Curriculum Development and Evaluation, CRT Implementation Committee (1992) Criterion-referenced Testing. Rationale for Implementation. Republic of Botswana, p. 13	

Many members of the groups involved in setting examination questions for the end of primary education as indicated in table 2 may have no formal training in assessment and simply draw on experience.

Table 2: Groups involved in setting examination questions (end of primary schooling)

Country	primary school teachers	secondary school teachers	school inspec tors	TTCs tutors	University lecturers	Curriculum developers	Examination specialists
Botswana	X		X	X		X	X
Kenya	X			X			X
Lesotho	X		X			X	X
Malawi		X	X	X		X	
Swaziland	X		X	X	X	X	
Tanzania							X
Uganda	X		X	X			X
Zambia	X	X	X	X		X	
Zanzibar	X		X			X	X
Zimbabwe	X		X			X	X

A closer look at the situation of science subjects in the end of primary school examinations reveals that Science features in all examinations, but the importance attached to this subject differs from country to country. Science is either a compulsory paper like Mathematics and Languages (e.g. in Botswana), or is part of a compulsory »General Paper« (e.g. Tanzania, Zimbabwe), or appears only as an optional paper in the examination (e.g. Malawi). To stress the importance of Science in primary education and ensure appropriate teaching, the discussions in Zimbabwe have resulted in proposals to establish Science as an additional compulsory paper in its own right, rather than to examine it with Social Studies and Religious Education which are not cognate subjects.

Table 3: Science Subjects in End of Primary School Examinations

Country	Subject paper	Type of items	No of questions	Time available for subject (minutes)	Remarks
Botswana	Science	Multiple-choice (4 options)	60	60	Agriculture not examined in Primary School Leaving Examination.
Kenya	Science & Agriculture	Multiple-choice (4 options)	60	120	30 questions for each subject.
Lesotho	Science	Multiple-choice (4 options)	70	90	Agriculture included in Science paper.
Malawi	• Science and Health Education	Short answers	31	120	Answers in English/From 1995 on only one paper called »Science Incorporated« (incl. Science, Agriculture
	• Agriculture	Short answers	25	120	and Health Education) will feature as an optional paper in the exam consisting of multiple-choice items.
Swaziland	• Science				Two papers are given in Science, one with multiple-choice items, one requesting short answers in English. Agriculture is examined as an additional optional paper.
	Paper I	Multiple-choice (4 options)	40	90	
	Paper II	Short answers	6	120	
	• Agriculture				
	Section I	Multiple-choice (5 options)	30	90	
	Section II	Short answers	12		

Country	Subject paper	Type of items	No of questions	Time available for subject (minutes)	Remarks
Tanzania	General Knowledge incl. Science	Multiple-choice (5 options)	20	30	General Knowledge paper consists of History, Geography, Civics, Science, Agriculture, Health and Home Science. 20 questions for Science.
Uganda	Basic Science and Health Education	Short answers	**55**	135	Answers in English; Agriculture included in the Basic Science and Health Education paper.
Zambia	Environmental Science	Multiple-choice (4 options)	50	60	Agriculture included in Environmental Science paper.
Zanzibar	Science				Agriculture not examined.
	- Section A	Multiple-choice (4 options)	20	90	
	- Section B	Short answers	6		
Zimbabwe	General Paper incl. Science & Agriculture	Multiple-choice (5 options)	20	40	General paper consists of Religious & Moral Education, Social Studies, Science & Agriculture.
Note: Tabulation based on the 1994 examination papers.					

Agriculture as a separate subject in the examinations faces even greater problems finding adequate recognition. Only one country does not include Agriculture in the examinations (Botswana), but in most cases the subject is included as a subtopic in the compulsory Science or General Paper. Agriculture appears as a separate, but optional paper only in Swaziland.

Throughout the countries Science and Agriculture are tested in the national examinations with using multiple-choice questions. The latest country to adopt this style of testing is Malawi which started applying such items from 1995 on. The decision to use multiple-choice items in the examination was preceded by two research analyses of the previous examination system.[6]

[6] See: Chimwenje, Catherine (1993) Evaluation of the Primary School Leaving Examination in Malawi: How the Examination meets its educational and selection Goals. PhD-thesis. Univ. of Sussex/England; Bradbury, Richard (Oct. 1992) Primary Science School Leaving Examinations. Malawi-German-Primary Science Project, Occasional Papers No. 1.

The opposite happened in Uganda, where 1983 multiple-choice questions in the examinations were completely abolished and pupils had to get used to giving short answers in English to each item. As a consequence of this revision the number of questions was reduced allowing more time for the written statements from pupils allowing assessment of a wider range of attainments. Swaziland has tried to compromise between multiple-choice and open-ended questions by combining both. Science as well as Agriculture are tested in the end of primary examination with two papers each. For example the Science test consists of a paper with 40 multiple-choice items and another with six questions where short answers are expected.

What kind of multiple-choice questions are used in the examinations? The claims of those responsible for the design of the examination papers do not match the results shown by analyses of the actual papers intended to test pupils' performances in the science subjects. With the exception of Kenya all the other countries appear to include large proportions of recall questions in Science and Agriculture. On average two thirds of the test items fall under this category. Questions which test pupils' ability to apply what they have learned to new situations, or which require an understanding of how facts are linked to one another, are much less frequent, and in most countries account for 25 to 35% of all Science questions. The case of Kenya demonstrates that the application of skills and knowledge acquired in schools can be at the centre of the examination with 50 to 60% of all items intended to work at this level. This leaves a substantial proportion of the total number of questions to test higher order skills (10-20%).

The structure of examination questions in the science subjects shows a clear concentration on those multiple-choice items testing simple knowledge. Higher-order skills or the capacity for applied thinking are rarely tested. The good intentions of those setting the examinations to evaluate achievement based on the educational objectives of subject curricula seem to run into difficulty when skills are valued which require evidence of comprehension, application and communication skills. In a provisional analysis of Environmental & Agricultural Science in the national primary school Grade 7 Examination in Zimbabwe, Lewin shows that most items he analysed in the General Paper required only the recall of information. Knowledge items accounted for 66% of all Science items, comprehension items for 28% and application items for only 6% of the total items in the 1990 and 1991 examinations papers. »Though the skills of comparison and classification can be tested with multiple-choice items they appear not to be. There are very few items that deal with measurement skills. A small number of items are concerned with interpreting data. Thus opportunities seem to have been missed... to interrelate the cognitive demand of examination items with the science skills identified in the syllabus document«[7] Although most of the countries only use multiple-choice items for their tests in Science and Agriculture, examination specialists are aware of the limitations of such a test method, particularly with regards to encouraging the expression and originality of the pupils.

[7] Lewin, Keith (May 1992) Provisional analysis of national examination papers 1990 and 1991, Environmental and Agricultural Science in Zimbabwe. Preliminary analysis, p. 4.

All countries of the region included in this survey report different performances of girls and boys in the end of primary school examinations. On average girls achieve lower scores than boys. There is some evidence that boys perform better on multiple-choice questions, whereas girls show greater talent in free response items.[8] It is also probable that, since no examination construction procedures specifically filter out items with strong gender differentiation in performance, that differences in performance are partly a result of the way items are chosen. The 30 items developed during the training workshop in Nyeri/Kenya in 1994 and tested in six different primary schools with more than 300 pupils showed gender differences in pupils performance. This mock-examination in Science/Agriculture indicated that boys did much better in all items referring to more abstract/technological questions (levers, pulleys etc.). Girls however did significantly better on weather recording (charts) and on agricultural problems dealing with maize growing. Interestingly in the best performing school where girls and boys are boarders from Std. I and enjoy the advantages of a well-staffed and well-equipped elite school, girls and boys scored equally highly on all items. Systematical checks of test items to prevent gender biases are still to be included in the designs of primary school leaving examinations.

[8] See also Keeves, John P. (1994) National examinations: design, procedures and reporting. UNESCO: IIEP, Paris, p. 71.

Multiple-Choice Items

Advantages:

• Because multiple-choice questions take little time to answer, a test can measure a broader range of content than is possible with a test which relies solely on essay items or performance tasks.

• They are less costly to score. If specially prepared forms are used, they can be machine scored, allowing thousands of answer sheets to be scored in a very short period of time. Marking is also more reliable.

• They are an efficient way to measure recall of factual knowledge and some skills.

Disadvantages:

• It is more difficult to design multiple-choice questions which measure higher levels of thinking and problem solving.

• It is more difficult to design questions which measure more complex, real-life types of skills and thinking.

• They take more time to develop because of the need to construct four or five response choices.

• Multiple-choice tests promote multiple-choice teaching - that is, teaching where students are always looking for the one right answer.

• There is a significant chance of being able to get the correct answer by guessing, which is not the case with performance tasks or essays. If a multiple-choice question has four options, the student has a 25 percent chance of guessing the item correctly. Though this may not change the rank order of pupils, it may give a misleading impression of actual achievement.[9]

[9] Adapted from Capper, Joanne (March 1994) Testing to Learn... Learning to Test. A Policymaker's Guide to Better Educational Testing. Executive Summary. Academy for Educational Development, Washington, D.C.

Further efforts are needed to ensure that end of primary examinations are of a high quality and help at the same time to improve meaningful teaching/learning in primary schools. The application of multiple-choice questions in national examinations influences classroom teaching. »If the examination primarily contains items which have students selecting from among options, then students are likely to spend much of their time preparing for the test with worksheets in which they select the correct answer. This type of behavior is less likely to help students make the extensive web of mental connections which help them to understand and use what they learn in school«.[10] Future examination reforms need to pay attention to three priority areas:

(1) Devising assessment tasks which are stimulating and test active, problem-oriented thinking, in valid and reliable ways;

(2) selecting questions which are as fair as possible to all groups involved (especially to girls, pupils living in remoter or rural areas, and to pupils from less privileged socio-economic backgrounds);

(3) including some open-ended tasks in the assessment process to avoid sole dependence on multiple-choice questions (see BOX »Multiple-Choice Items«).

[10] ibid., p. 23.

Over the last decade one country in the region has successfully improved the internal quality of the examination at the end of primary education to make examinations more meaningful and relevant to the things taught in school based on the curriculum. By changing the type of questions asked in the Kenya Certificate of Primary Education examination from simple recall questions to items testing intellectual skills, the examination reform has supported curriculum changes. »... the whole success of such an operation in Kenya, as elsewhere, depends on building up the skills not only of those who devise the items but also ultimately of the children who read them, since a 'thinking type' question almost invariably employs more difficult language structures than a 'recall type'«.[11]

[11] Hawes, Hugh & Stephens, David (1990) Questions of Quality - Primary Education and Development. Longman, p. 170.

Another problem causes even greater headaches. The increasing importance of examinations has negative repercussions on classroom teaching and leads to all different kinds of manipulation during and after the examinations. Uganda's National Examination Board reported a situation typical for nearly all other countries:

• Primary schools concentrate solely on those subjects featuring in the national examination;

• those subjects not tested in the examination (like Art & Crafts, Music, Physical Education) disappear from the schools' timetable;

• children spend much more time in school than officially planned, because of many mock-examinations;

• even during vacations tutoring (against payment) for examinations takes place in schools;

• private coaching clinics for end of primary school examinations flourish;

• examination cramming texts are bought in preference to official curriculum materials.

Similar experiences are also reported from Kenya. The struggle for being amongst the top performing primary schools in the country and having as many pupils as possible placed in the country's elite secondary schools has produced a classroom situation where children are continuously assessed through written examinations throughout the year. Mock-examinations are designed and set by a panel of teachers and parents have to pay fees for those »tests«. On the average children write nine examinations per year and subject. The third term of the last year in primary school is completely devoted to former examination papers of the Kenya National Examinations Council. Thus, large parts of the curriculum for Std. VIII are not covered properly. Every administrative unit (zone, division, district) organises special mock-examinations to provide as much opportunities as possible to getting prepared for the final national examination. Most worryingly perhaps, practical activities which provide opportunities to apply knowledge and concepts are relegated to occasional activities with little coherent purpose.

In many countries, much more effort needs to be made to ensure that the examinations are of the highest possible quality. Apart from the psychometric qualities of validity and reliability, the following three criteria are suggested for judging the quality of examinations.

• **Active thinking.** Testing only recall information is to be avoided. Active ideas are held in the mind as pictures in which elements are linked to each other in patterns. Knowledge-based questions should test understanding of these patterns. Such questions should be concerned with causes, consequences, and reasons; with relationships, trends, and general ideas. In other words with understanding. The assimilation of the knowledge is a characteristic of active thinking. Examinations in some subject areas should include a number of data-based questions requiring students to read and interpret new information. Examinations should also include questions testing the application of knowledge to new situations including drawing inferences, making predictions, or solving problems. There is always the problem that what is new to one student may not be new to another but, in general, it is possible to construct questions which are known not to be in the major textbooks that have been used. The above points have been well known since Bloom's Taxonomy of Educational Objectives« (Bloom et al, 1956) appeared but surprisingly are often ignored.

• **Equity.** The examination should, to the maximum extent possible, be fair to all groups: to girls, to students living in rural areas, particularly in remote parts of the country, and to those from less-privileged socioeconomic backgrounds. Biases in individual questions are often unavoidable (especially in questions which are experience-based). However the question setters should attempt to ensure that, over the examination as a whole, these biases counterbalance each other as much as possible. This is, however, no easy task. The performance of students in the remote and less privileged schools is nearly always adversely affected by the quality of the education they receive and therefore it is important to ensure that avoidable biases in examination questions do not compound their disadvantage.

• **Open-ended questions.** Even when there is evidence to indicate that, from an assessment point of view, the examination of open-ended questions does not provide additional information for prediction purposes it is nevertheless desirable to include open-ended items simply to ensure that teachers do not only use multiple-choice items. It must also be remembered that it is impossible to assess students' ability to develop a logical argument, to defend a point of view, to write essays and the like with multiple-choice items.[12]

[12] Ross, Kenneth N. & Mählck, Lars (eds.) (1990) Planning the quality of education. The collection and use of data for informed decision-making. UNESCO: IIEP. Pergamon Press, pp. 28, 29.

In this way children are continuously assessed throughout their school career, starting with tests in Std. I. Teachers have become so used to these assessment exercises and the related fringe benefits like additional income, that they defend the tests as a necessary means for providing better education and increasing children's chances to pass the examination. As a result teaching/learning in Kenya's primary schools has become examination-oriented to an extent that the pedagogical objectives of the curriculum are more and more neglected. »The learning process is to fit the cut-throat competition for high grades in public examinations. The teachers use all tricks they can to enable their children to perform well in public examinations, including drilling them on how to answer examination questions and giving frequent trial test, known in Kenya as mock examinations«.[13] To counteract these unhealthy developments the Kenya Institute of Education now tries to design model items to assess children at different stages in primary school to reduce the inflation of mock-examinations and improve their range and quality.

[13] Mulusa, Thomas (1992) Pluralistic education in sub-Saharan Africa. An Overview. In: PROSPECTS, Vol. XXII, No. 2, pp. 159-170, p. 162.

Pupils' knowledge and abilities can be measured in many ways. Because the different formats of assessment have their advantages and disadvantages some countries try to include various kinds of question formats in their examinations, like Swaziland using multiple-choice items and open-ended questions in the Science paper. Performance tasks are a further possibility to measure pupils' understanding of processes and the ability to demonstrate skills and techniques in real-life situations. »Students at the primary level can learn to classify and observe - two basic and essential elements of the scientific process. Hands-on science tests at this level might involve students in putting seeds and beans into categories and explaining why they selected those categories, or measuring and recording various objects, such as their hands, feet, or pulse rate before and after exercise«[14] The use of performance tasks in examination however faces a number of constraints: Teachers need intensive training and assistance in learning how to teach such tasks, and the administration and scoring is time-consuming, costly and rather complex.

[14] Capper, Joanne, op. cit., p. 20.

Pros and Cons of School-Based Assessment

Arguments can be advanced in favor of and against school-based assessment (Heyneman 1988; Pennycuick 1990). Arguments in favor go as follows:

• Since assessment by teachers is a crucial component of good learning and teaching, every effort should be made to improve teachers' competence in this area (Crooks 1988). If school-based assessment becomes part of the certification process, it is likely that greater effort will be invested in improving teachers' general competence in assessment, and this should have beneficial effects on teaching and learning.

• School-based assessment provides immediate feedback information to teachers on student achievement and teaching effectiveness.

• Since school-based assessment is carried out over time and by a person who knows students well, it is likely to provide a more valid and reliable appraisal of a student's achievements than can a single external terminal examination. In this context, one commentator in Zambia has observed that the school is »the only place where there is enough information to do reasonable justice to a pupil« (Kelly 1986, p. 20).

• School-based assessment permits an extension of the range of curriculum topics to be examined. The present system of examinations limits the range of achievements that can be assessed and must narrow the curriculum in schools. Aspects of achievement that cannot be satisfactorily assessed in a terminal examination include a student's ability to plan and organize a project and persevere with it over time. While the assessment of oral and practical skills may be carried out in a terminal examination, inevitably it will be limited, artificial, and expensive.

• School-based assessment reduces the undesirable back-wash effects of external examinations.

• School-based assessment, if spread over the year, can increase the level of pupil motivation and application throughout the year.

Some of the following arguments advanced against the use of school-based assessment in the certification of students:

• Its use can change the nature of the relationship between teachers and students towards making the judicial aspect of the teacher's role more prominent.

• Marking standards in school-based assessment are likely to vary both within and among schools. While moderation procedures can help, they tend to be expensive.

• School-based assessment can subject teachers to considerable parental pressure, especially during the periods leading up to and immediately after critical public examinations.

• School-based assessment requires teachers to devote more time to assessment and recording.

• School-based assessment gives rise to a variety of administrative problems for schools, such as what to do when students are absent for tests or when students transfer from one school to another.

• Teachers' assessments are subject to a variety of biases.

• In many instances, it is difficult if not impossible to apply school-based assessment to non-school-based candidates.

• Teachers' assessments are often technically unreliable and may have low content and predictive validity.[15]

[15] Adapted from: Kellaghan, Thomas and Greaney, Vincent (1992) op. cit., pp. 42, 43.

The assessment of practical subjects in the final examinations poses particular problems. Should e.g. in Art & Craft pupils produce something for the examination or should the progress made over a certain period being continuously assessed and taken into consideration for the ultimate judgement? Some countries have therefore started to experiment with some kind of continuous school-based assessment. The advantages and disadvantages of school-based assessment are well summarised by Kellaghan and Greaney in a study of fourteen African countries (see BOX). Again, as in the case of using performance tasks, teachers need to be trained carefully for this type of assessment. Furthermore, parents and communities must have faith in the fairness of such examination procedures.

References

1. Bradbury, Richard (Oct. 1992) Primary Science School Leaving Examinations. Malawi-German-Primary Science Project, Occasional Papers No. 1

2. Capper, Joanne (March 1994) Testing to Learn... Learning to Test. A Policymaker's Guide to Better Educational Testing. Executive Summary. Academy for Educational Development, Washington, D.C.

3. Chimwenje, Catherine (1993) Evaluation of the Primary School Leaving Examination in Malawi: How the Examination meets its educational and selection Goals. PhD-thesis. University of Sussex/England

4. Graham, John R./Lilly, Roy S. (1984) Psychological Testing. Prentice-Hall, Englewood Cliffs, New Jersey, USA

5. Hawes, Hugh & Stephens, David (1990) Questions of Quality - Primary Education and Development. Longman.

6. Keeves, John P. (1994) National examinations: design, procedures and reporting. UNESCO: IIEP, Paris

7. Kellaghan, Thomas & Greaney, Vincent (1992) Using Examinations to Improve Education. A Study in Fourteen African Countries. World Bank Technical Paper No. 165. The World Bank, Washington, D.C.

8. Lewin, Keith (May 1992) Provisional analysis of national examination papers 1990 and 1991, Environmental and Agricultural Science in Zimbabwe. Preliminary analysis. Ministry of Education and Culture, Zimbabwe/Deutsche Stiftung für internationale Entwicklung (DSE), Bonn (Draft Report)

9. Ministry of Education, Department of Curriculum Development and Evaluation, CRT Implementation Committee (1992) Criterion-referenced Testing. Rationale for Implementation. Republic of Botswana.

10. Mulusa, Thomas (1992) Pluralistic education in sub-Saharan Africa. An Overview. In: PROSPECTS, Vol. XXII, No. 2, pp. 159-170

11. OECD (1989) Schools and Quality. An International Report. Paris

12. Ross, Kenneth N. & Mählck, Lars (eds.) (1990) Planning the quality of education. The collection and use of data for informed decision-making. UNESCO: IIEP. Pergamon Press

13. UNESCO (1991) World Education Report. Paris

3. Country Reports/Examination Papers

3.1. Botswana

3.1.1. Overview

End of Primary School Examination

1 Title of examination:	Primary School Leaving Examination
2 Amount of fees charged:	Nil
3. Examination after years in primary school (6, 7, 8 years):	7 yrs
4. Children's entry age in primary school:	7 yrs
5. Number of pupils sitting examination in 1994:	36,158
6. Examination subjects offered:	• Setswana, • English • Mathematics • Science • Social Studies. The Setswana and English papers have an essay component in addition. The other papers are objective papers.)
7. Language of examination:	English (except for Setswana paper)
8. Institution setting the examination questions:	Department of Curriculum Development and Evaluation, and Examinations, Research and Testing Division
9. Have there been any reforms in the examination questions?	Yes
When? (year)	1991
What kind?	The examination papers were nine and they were cut down to five, thus excluding the aptitude testing papers which were previously used for selection. All the questions now test skills prescribed by the curriculum. Criterion-referenced testing is considered for implementation.

10. Stages of development of examination questions (please describe):	• Appointment of Chief Examiner by Examinations Unit. • Convening of the item writing workshop, involving primary school teachers, Curriculum Development experts, Examinations experts, Research and Testing experts, and Education Officers. • Compilation of the paper by the Chief Examiner. • Shredding session comprising Curriculum Development Unit, Examinations Unit, Research and Testing Centre, Chief Examiner and invited educationists. • Trial testing. • Item analysis. • Compilation of final paper by Chief Examiner.
11. Type of examination questions and distribution of different kind of questions.	Details vary from subject to subject.
12. Is continuous assessment incorporated in the final examination?	Yes [ ] No [x]
13. Are examination items pretested?	Yes [x] No [ ]
14. Which professional groups are involved in setting the examination questions?	• Primary school teachers • School inspectors • Tutors of TTCs • Curriculum Developers • Research Testing Officers (Technical Expertise) • Education Officers (in-service)
15. Are the same professionals who set the examination questions involved in marking papers?	Yes [x] No [ ] The essay components (English and Setswana) of the Primary School Leaving Examination are marked by primary school teachers.
16. How are examination results used for improving teaching in primary schools?	Examination reports are sent to schools to describe the behaviour of each item during marking and how markers view it generally. The reports of the results are given to Members of Parliament, Education Officers, schools, the district administrators and all government departments. The authorities are motivated for future planning by the type of result achieved.
17. To what other uses are the examination results put?	They were formerly used for selection to secondary education. With universal access to nine years of Basic Education the selection purpose fell away in 1993.
18. Main problem with Primary School Leaving Examinations?	./.

3.1.2. Primary School Leaving Examinations: The Case of Botswana

by Mookgweetsi Masisi, Curriculum Development and Evaluation Department

The Primary School Leaving Examination in Botswana is the joint responsibility of the Examinations, Research and Testing Division, and the Department of Curriculum Development and Evaluation at the Ministry of Education. It must be mentioned at the outset that practising primary school teachers play an extremely significant and active role throughout the process.

Functionally, the Examinations, Research and Testing Division is responsible for the administration of examinations and for ensuring that what needs to be done at various points gets done. The actual development of examination items is carried out at an item writing workshop. Participants of a primary school leaving examination item writing workshop are practising teachers who are selected mainly by their Education Officer in collaboration with the responsible Research and Testing Officer and/or Curriculum Officer. More as a matter of principle than as a rule, upper primary school teachers are selected for the workshop. This is because the examination is constructed from those topics and objectives that are taught in standards five, six and seven. It is primarily the responsibility of the Examinations, Research and Testing Division to ensure that such a workshop gets held, and to ensure that all the necessary criterial attributes of test development are given due attention throughout the workshop. The Curriculum Development and Evaluation Department, which takes part in such workshops, is responsible for ensuring adherence to the test plan (curriculum spread). Curriculum objectives or extrapolations of the topics serve as a guide when designing items. The intention is to produce items that are positively related to the stated objectives.

The reality of this is obviously mitigated in subjects that either do not have stated objectives or have »fuzzy« objectives. The Examinations, Research and Testing Division itself plays an enabling role of administration - ensuring that schedules are not disregarded. The same division bears the responsibility for appointing a chief examiner. It is at this state also that the first evaluation by professionals takes place as regards validity of the items. Whilst the Examinations, Research and Testing Division personnel will ascertain adherence to the internal qualities of the items, the curriculum officers as well as the teachers will ascertain the curricular validity of the items in the context of the syllabus and classroom.

Following the item writing workshop, at which items are generated, the chief examiner puts together a draft paper which is presented for discussion at a shredding session. Professional personnel from the Curriculum Development and Evaluation Department, the Examination Research and Testing Division, education officers and teachers are present and take an active part in the deliberations. At such a shredding session, attention is given to the construct, face and curricula validity and the shredding (editing) is undertaken with these in mind. All observations and recommendations are noted by the chief examiner and followed by corrective measures. This having been done, a paper is prepared by the chief examiner who then hands it over to Examinations, Research and Testing Division for trial testing. Through the trial test, analyses of individual items are derived. The trial test establishes the item difficulty. The item discrimination is also established which checks the internal consistency of the test. It is the trial test results together with the professional opinion of the chief examiner and the curriculum officer which determine the ingredients of the final paper.

Stages in Examination Development Process/Item Examples

1. Appoint chief examiner

2. Hold item writing workshop

3. Chief examiner compiles a draft paper

4. Shredding session

5. Chief examiner reconstructs draft paper

6. Trial testing and item analysis

7. Chief examiner constructs final life paper

At this juncture, examples of some items from some past Primary School Leaving Examination papers are in order. The statistics presented with them are the actual ones from their trial testing. Given that Agriculture has only recently been offered at the primary school level and elements of Environmental Science are currently being tested under the auspices of Science, only the Science examples are provided.

Below are five examples from past examination papers.

1. A certain season has the longest days, another has the longest nights. What are they?

A	Autumn, spring	.08	-.14
B	Summer, winter	.61	.33
C	Spring, summer	.12	-.16
D	Summer, autumn	.16	-.16

Source: Item 6 Science PSLE 1989

2. During a thunderstorm, light is sensed before sound because

A	light is not as heavy as sound.	.13	-.20
B	eyes work more quickly than ears.	.05	-.15
C	light travels faster than sound.	.75	.33
D	ears do not react as fast as eyes.	.04	-.14

Source: Item 7 Science PSLE 1989

3. What is the temperature shown by the thermometer below?

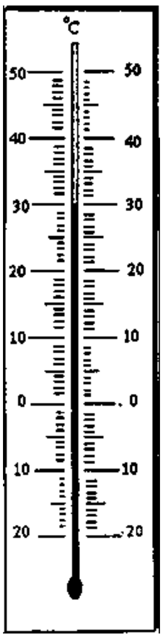

A	30°C	.22	-.32
B	31°C	.72	.41
C	32°C	.02	-.11
D	33°C	.02	-.15

Source: Item 8 Science PSLE 1990

The graph below shows the smoking habits of people who have died from lung cancer.

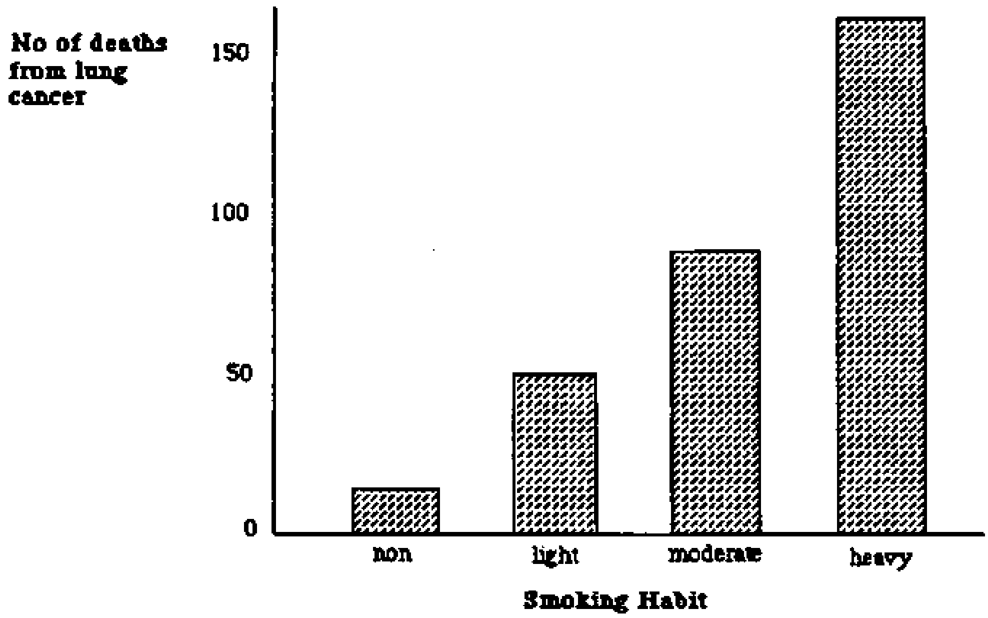

4. From the information in the graph which of the following statements is correct?

A	People who do not smoke can also die of lung cancer.	.15.	.06
B	Only people who do not smoke die of lung cancer.	.05	-.21
C	Smoking reduces chance of death from lung cancer.	.57	.07
D	The less one smokes the greater the chance of dying from lung cancer.	.20	.00

Source: Item 28 Science PSLE 1990

Four farmers planted their crops for four years in the following way.

	Farmer A	Farmer B	Farmer C	Farmer D
Year 1	beans	sorghum	potatoes	maize
Year 2	maize	potatoes	maize	sorghum
Year 3	sorghum	maize	beans	maize
Year 4	beans	potatoes	melons	sorghum

5. Which of the four farmers **A**, **B**, **<u>C</u>**, and **D** had the best pattern for crop rotation?

.18 -.10
.08 -.12
.49 .22
.23 -.06

Source: Item 34 Science PSLE 1990

It will be realised that given the nature of our PSLE, an inordinate emphasis is placed on achievement norm-referenced testing. Part of the reason is its convenience for selection, but frankly it is also easier to undertake. The utility of using such tests for selection is diminishing over time as access to the next level is expanding.

Data Capture and Processing

Achievement scores are captured through machine scorable sheets. The sheets are scanned and item responses recorded on to magnetic types at the Examinations, Research and Testing Division (ERTD). Programmes for merging student name files and test scores, checking inconsistencies and missing data are run by the Government Computer Bureau (GCB). The ERTD does error checking and editing of the merged files.

The raw scores for each candidate are standardized to T-scores. The standardization formula is as follows:

$$10\left(\frac{x-\bar{x}}{SD}\right)+50$$

Where x = subject core
$\bar{x}$ = subject mean
SD = subject standard deviation
10 = given standard deviation
50 = given mean

The transformed subject scores are graded into A, B, C, and D. Sample:

Student 001									
	Sets Essay	Sets Obj. T.	Eng Essay	Eng 1	Eng 2	Maths 1	Maths 2	Soc Stu	Science
Row Scores	25	39	26	40	43	40	36	32	37
T - scores	58	47	60	58	57	63	60	53	55

Student 002									
	Sets Essay	Sets Obj. T.	Eng Essay	Eng 1	Eng 2	Maths 1	Maths 2	Soc Stu	Science
Raw Scores	24	33	25	33	33	22	26	18	24
T - scores	56	50	58	51	48	44	46	38	41

The transformed scores are then added together and averaged to obtain an aggregate which is graded into A, B, C, and D.

Sample:

Student A				
	T-Scores	Grades	Aggregate Score	57.76
Maths 1	63	A	Pass Level	B
Maths 2	60	B		
Science	55	B		
Soc Stu	53	C		
Eng 1	59	B		
Eng 2	57	B		
Sets	58	B		

Grading

There are set cut off points used for grading both subject test scores and aggregate scores.

<u>Subject Grading</u>

Grade	Standard Score
A	63 - up
B	55-62
C	46-54
D	45 - down

Aggregate Grading

Grade	Standard Score	SD Range	Approx. % of Candidates
A	63.01 - up	+ 1.00 SD & over	8
B	55.01 - 63.00	+ 0.5 SD - 1.00 SD	24
C	46.01 - 55.00	- 0.5 SD - + 0.5 SD	42
D	46.00 - down	- 1.5 SD & below	26

It is the aggregate score that is used in the merit list which in turn is used for selection where and when applicable.

Reporting

Various reports are produced by the Government Computer Bureau for the Examinations, Research and Testing Division. These are procedural reports some of which are used internally and the rest for public consumption. The internal reports are the Raw Scores, the Transformed Scores and Item Analyses.

Sample: Item Analysis

Question	Answer	A	B	C	D	None	Multi
		.04	.73	.20	.01	.00	.00
001	B	-.11	.36	-.29	-.09	.00	.00
		.14	.72	.07	.06	.00	.00
002	B	-.15	.34	-.19	-.19	-.01	.00
		.10	.19	.05	.64	.00	.00
003	D	-.10	-.29	-.14	.39	.00	.00

The Examinations, Research and Testing Division also receives a merit list which is used mainly for selection purposes by the Secondary Education Department

Sample:

Merit List

Pass level	Aggr Score	Sets	Eng 1	Eng 2	Maths 1	Maths 2	Soc Stu	Science
A	79.30	0	74	71	82	89	81	79
A	78.45	78	76	71	83	83	79	80
A	78.07	0	78	72	81	82	79	78
A	77.73	0	75	72	82	84	80	74

All government departments, schools, primary education officers and parastatals receive the overall results document which shows subject grades (A, B, C, and D), aggregate pass levels (A, B, C, and D) and various summaries. The results are shown by centre. At the end of each centre's results are summaries for the centre. The document also contains national summaries showing the overall number of candidates per district, the breakdown per grade level and the percentage of candidates in each grade A, B, C, or D. These summaries can be used to tell how districts perform against others.

Sample:

Actual Results

Pass level	Sets	Eng 1	Eng 2	Maths 1	Maths 2	Soc Stu	Science
B	c	B	A	A	A	A	A
A	B	A	A	A	B	A	A
C	C	C	C	B	C	B	C
c	c	B	C	C	C	C	D
B	A	B	B	B	B	A	B

A - 29 B - 34 C - 24 D - 6 Total - 93

Members of Parliament too can receive reports on request for their political districts. Most leaders have provided their constituencies with trophies as encouragement and so with the help of the reports they are able to tell how the different schools in their constituencies perform over time. The reports can be used to attempt to establish causality of success or the lack of it, hopefully followed by remedial action.

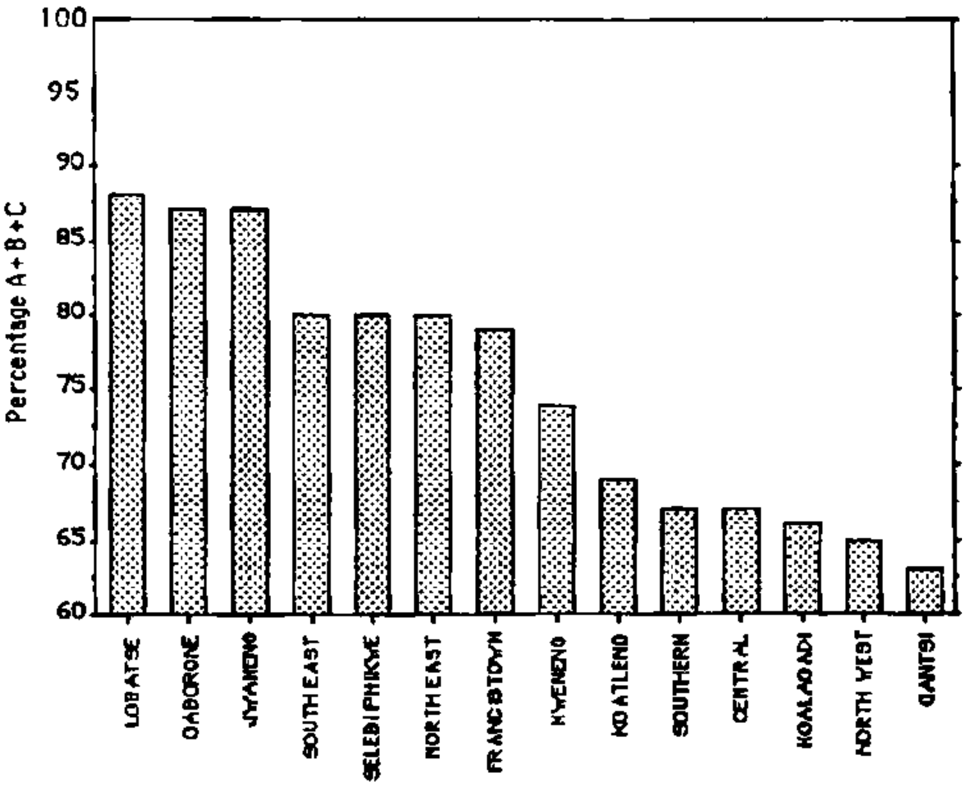

1991 PRIMARY SCHOOL LEAVING EXAMINATION PERCENTAGE A+B+C CATEGORIES BY DISTRICT - Sample

The Examinations, Research and Testing Division produces some reports for education officers only on request. An education officer would be in a position to provide services to schools based on their performance from year to year. For instance a school might require inservice training, more qualified teachers, more classrooms etc.

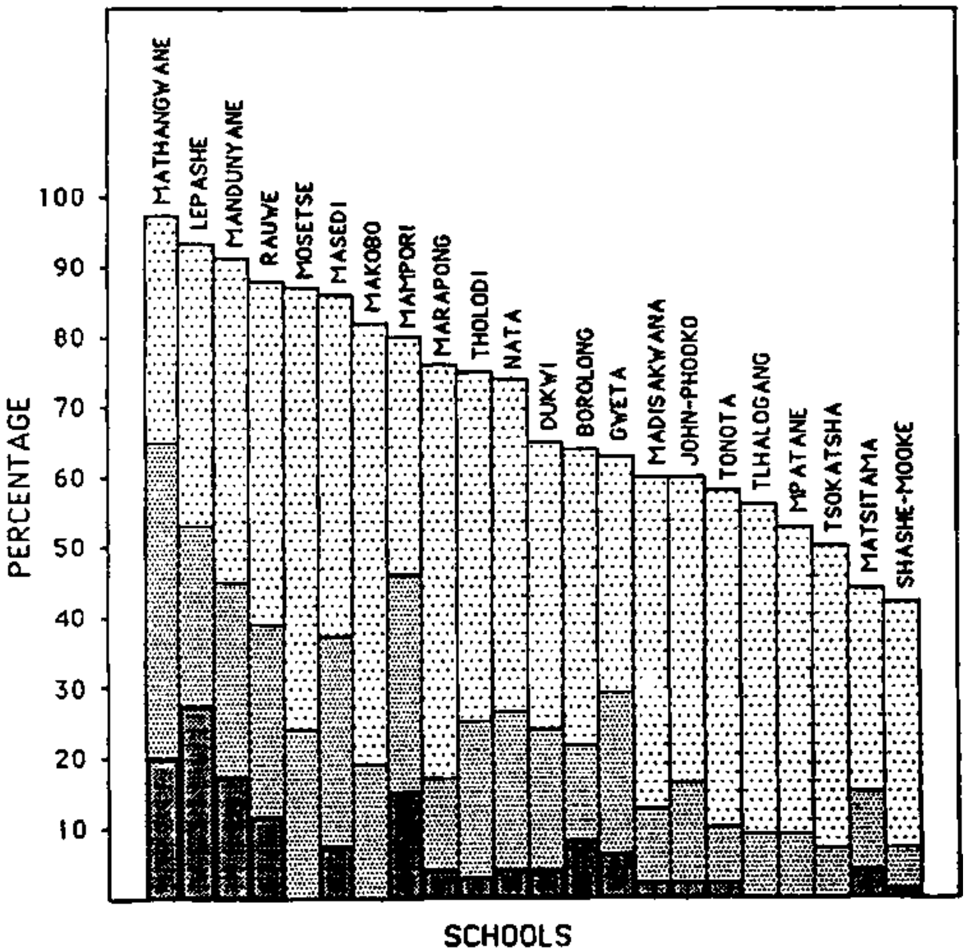

PROPORTIONS OF STUDENTS OBTAINING "A", "B" AND "C" PASSES ON THE 1991 PSLE: CENTRAL NORTH WEST REGION - Sample

References

1. Somerset, H.C.A. (1977) Selection, Examinations and Achievement in Botswana (A paper in Education for Kagisano, Volume 2 Annexes), Gaborone.

2. Republic of Botswana (1992) Criterion-Referenced Testing Rationale for Implementation. Department of Curriculum Development & Evaluation.

3.1.3. 1994 Primary School Leaving Examination/Science Paper

REPUBLIC OF BOTSWANA
1994 PRIMARY SCHOOL LEAVING EXAMINATION

SCIENCE **TIME: 60 MINUTES**

Directions

1. Use HB pencil ONLY. DO NOT use ink or ball point.
2. Print your name on the answer sheet in the space provided.
3. Fill the oval by BOY if you are a boy or GIRL if you are a girl.
4. In the four boxes under CENTRE write your centre number.
   In the three boxes under STUDENT write your examination number. In the column of numbers below each box, fill the oval that has the same number that you entered in the box.
   Fill the ovals with heavy black marks that fill the oval:

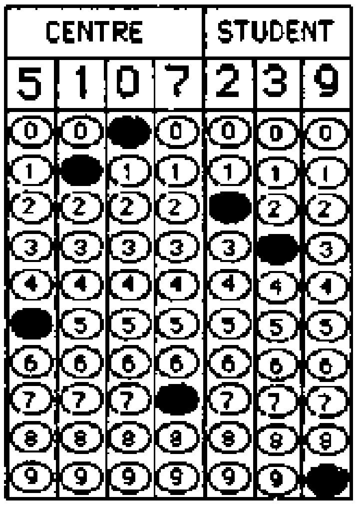

5. When you are told to begin, work as fast and as accurately as you can. If you cannot answer a question, do not spend too much time on it; go to the next question and come back to it later.
6. You may do rough work on the test paper or on a sheet of blank paper. DO NOT use the answer sheet for rough work.
7. Several possible answers are given for each question. Select the answer you think is the best and fill the oval for that answer on your answer sheet.
8. Be sure to fill the ovals like this:

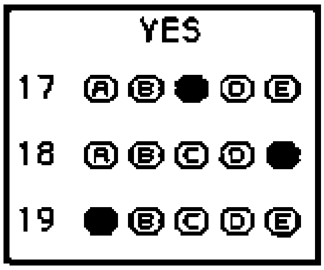

Erase completely answers that you wish to change.
Do not make any stray marks on your answer sheet.
If more than one oval is filled for a question it will be marked wrong.
Be sure the oval you fill on your answer sheet is for the question you are working on in the test paper.
DO NOT mark the ovals like this:

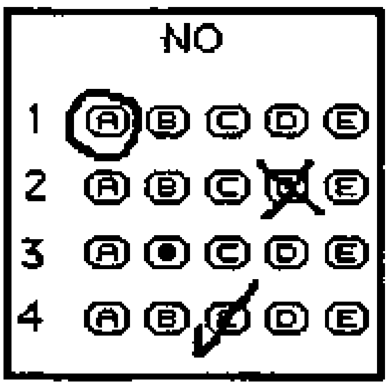

If you do, your answers will be marked wrong.
9. Sample questions are given to help you. Read them carefully before doing the questions.

Sample Questions

Sample 1 If a drum-skin is tightened its note will

A. increase in pitch.
B. decrease in pitch.
C. sound louder.
D. sound quieter.

SAMPLE 1 ● Ⓑ Ⓒ Ⓓ Ⓔ

Sample 2 A man with a heavy cold finds his food tasteless because

A. the cold germs kill the taste of the food.
B. the cold germs numb the taste buds.
C. his blocked nose cuts out his sense of smell.
D. he has lost his appetite.

SAMPLE 2 Ⓐ Ⓑ ● Ⓓ Ⓔ

A group of Standard 7 pupils recorded what the weather had been like in regions P, Q, R, S and T on the map shown below. Use the information to answer questions 1 to 3.

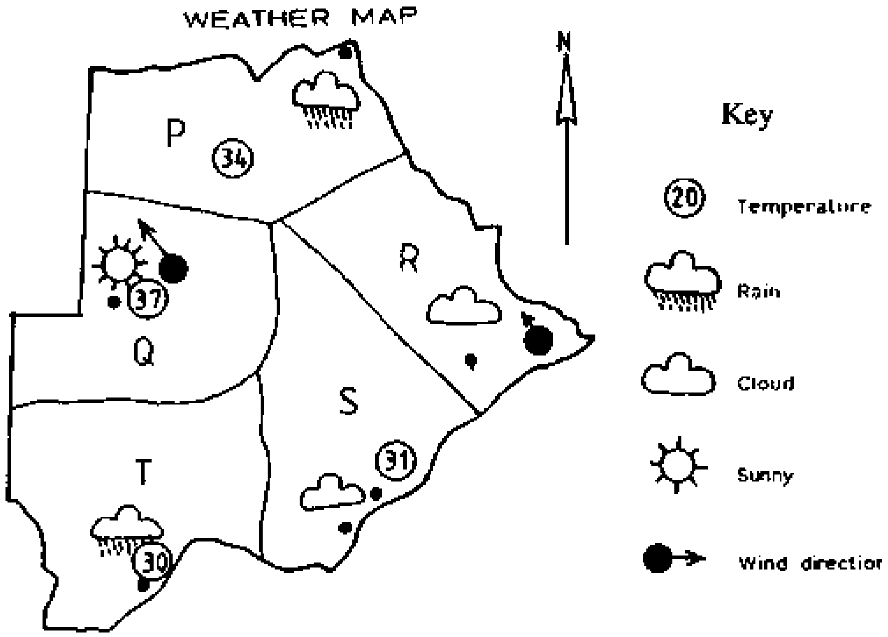

1. In which of the following regions was it raining?

A P and Q
B R and S
C P and T
D S and T

2. In which direction was the wind blowing in regions Q and R?

A North-west
B South-east
C North east
D South-west

3. What was the weather like in region Q?

A Sunny and cloudy
B Sunny and windy
C Cloudy and windy
D Cloudy and hot

4. An anemometer is used to measure

A amount of rainfall.
B speed of wind.
C atmospheric pressure.
D temperature.

5. In which of the following diagrams is the rain gauge **correctly** placed?

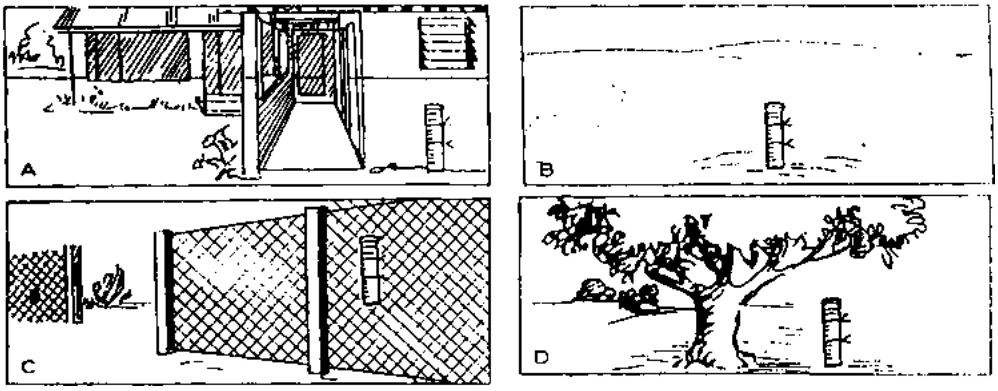

6. Which of the following is a source of underground water?

A River
B Lake
C Dam
D Borehole

7. Evaporation takes place when

A steam turns to water.
B water turns to steam.
C water turns to ice.
D ice turns to steam.

8. Which water will a farmer who ploughs be most interested in when it rains?

A Water that runs off the surface of the soil.
B Water that is held around the soil particles.
C Water that runs off to the sea.
D Water that evaporates into the atmosphere.

Mpho heated some water in a container and recorded the temperature every two minutes as shown below. Heating was stopped after 28 minutes. Use the table to answer questions 9 to 11.

TIME (minutes)	0	2	4	6	8	10	12	14	16	18	20	22	24	26	28
TEMPERATURE (°C)	10	12	16	24	30	38	44	50	58	64	72	80	96	96	96

9. How long did it take for the water to heat up to 60 °C?

A 16 minutes
B Between 16 and 18 minutes
C Between 18 and 20 minutes
D 18 minutes

10. What was the temperature of the water at the beginning and end of heating?

	Starting temperature	End temperature
A	0 °C	96 °C
B	10 °C	86 °C
C	0 °C	100 °C
D	10 °C	96 °C

11. Which of the following reasons best explains why the temperature remained 96 °C between the 24th and 28th minute?

A The burner was not hot enough.
B The water had reached boiling point.
C All the water had evaporated.
D The thermometer was not working.

12. Which of the following organs is used to sense light?

A Skin
B Ear
C Eye
D Tongue

13. At which point in the diagram below would the stick break easily?

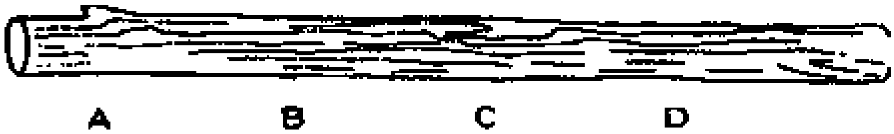

14. Which of the following activities **will help** in conserving soil?

A Burning wood
B Building houses
C Keeping many animals
D Digging terraces

The diagram shows a water system in a village. Use it to answer questions 15 and 16.

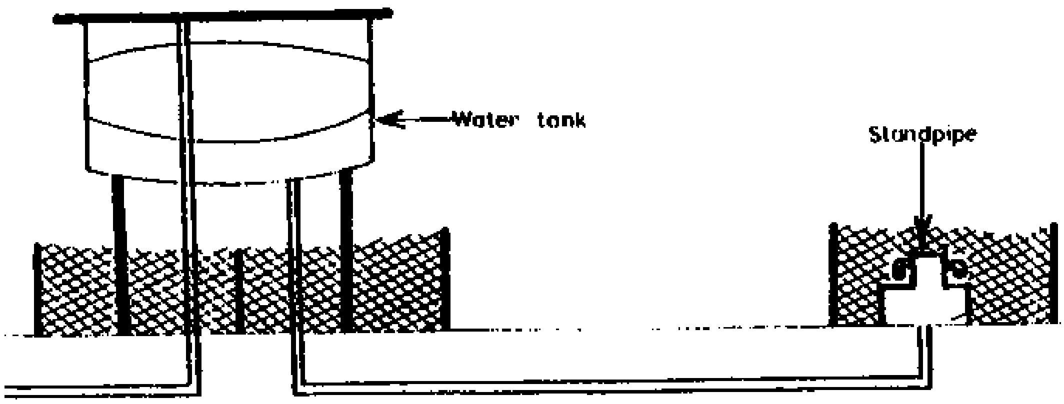

15. The water tank is covered to prevent

A the water from being contaminated.
B the water from evaporating.
C people from misusing the water.
D cattle from drinking the water

16. The water in the tank is purified by

A distillation.
B filtration.
C chlorination.
D sedimentation.

17. Wheelbarrows, scissors, hammers and spades are all examples of

A gears.
B inclined planes.
C pulleys
D levers.

Study the table below and answer questions 18, 19 and 20.

VERTEBRATE	**COVERING OF THE BODY**	**TYPES OF LIMBS**	**REPRODUCTION**	**BODY TEMPERATURE**
P	hair	arms and legs or four legs	young are born alive feed on milk	warm blooded
Q	feathers	wings and legs	eggs with hard shell	warm blooded
R	scales	legs	eggs, with leathery shell	cold blooded
S	damp skin	legs with webbed feet	eggs laid in water	cold blooded
T	thin scales	fins	eggs laid in water	cold blooded

18. Which of the following vertebrate groups have bodies covered with scales?

A P and R
B S and T
C R and T
D P and Q

19. Which of the following vertebrates are represented by the characteristics at P?

A Amphibians
B Reptiles
C Birds
D Mammals

20. A frog is an example of a vertebrate represented by

A T.
B S.
C R.
D P.

21. When a substance is attracted to a magnet, it is said to be

A an insulator.
B magnetic.
C a conductor.
D non-magnetic.

Study the pictures of animals shown below, and answer question 22.

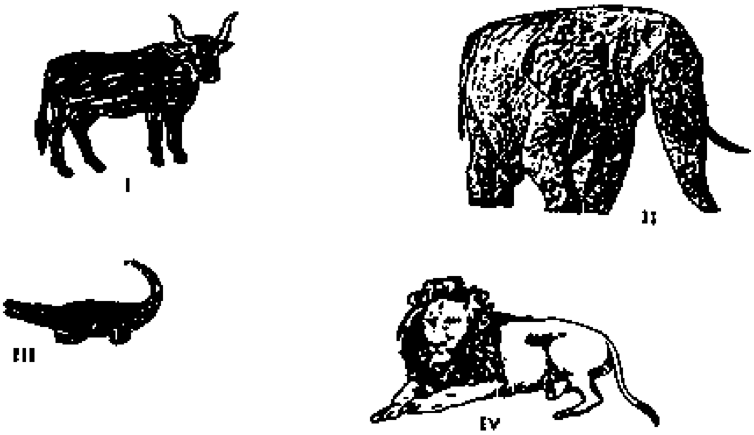

22. Which pair of animals shown below feeds on plants?

A III and II
B I and III
C IV and II
D I and II

23. Which of the following can be added to the soil to increase nutrients needed for plant growth?

A Manure
B Plastic
C Sand
D Water

The diagram below shows parts of a plant. Use it to answer question 24.

24. The name of the part labelled I is

A leaf.
B fruit.
C flower.
D stem.

A class of pupils observed some animals in their environment. They classified them and invented names for them as shown below. Use it to answer questions 25 and 26.

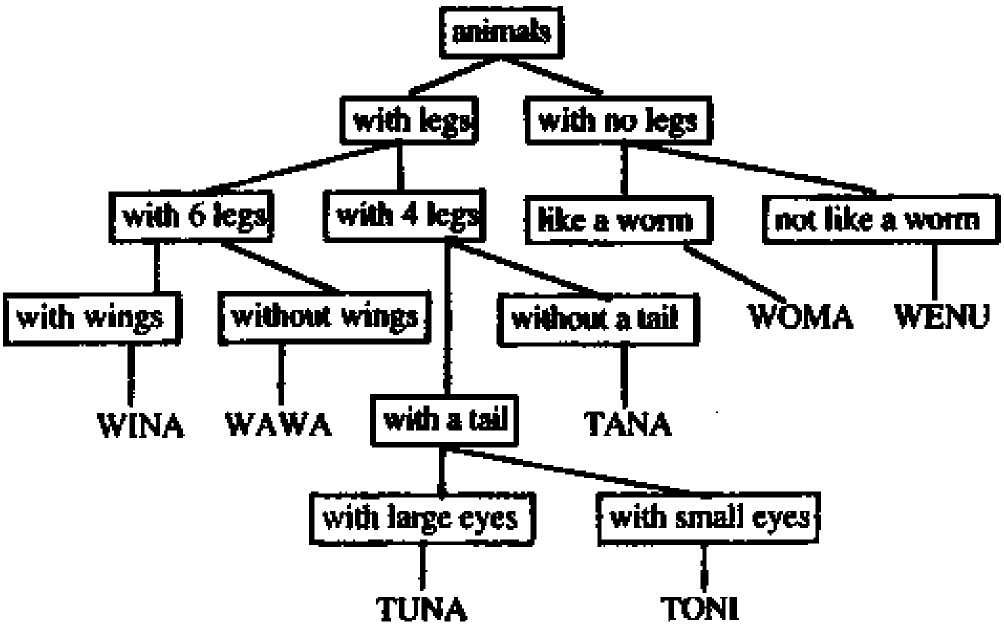

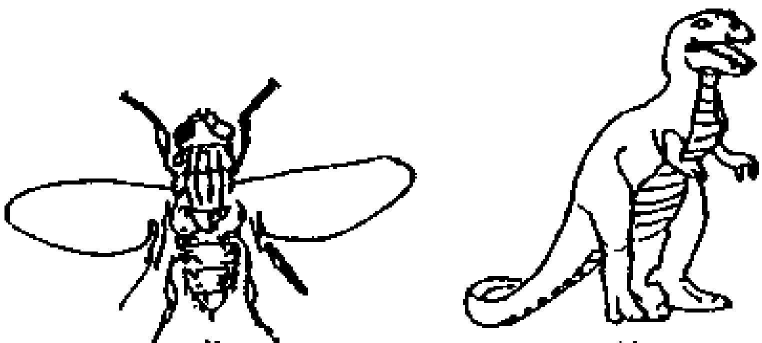

X Y

25. What is the name of animal X?

A TANA
B WAWA
C TUNA
D WINA

26. What is the name of animal Y?

A WAWA
B TANA
C TUNA
D WENU

27. Sound is heard when sound vibrations reach the

A eyes.
B nose.
C skin.
D ears.

Bontle grew plants in four different types of soil. She gave the plants the same amount of water and exposed them to the same amount of sunlight. Row I shows the plants at the beginning of the experiment and Row II shows the same plants after two weeks.

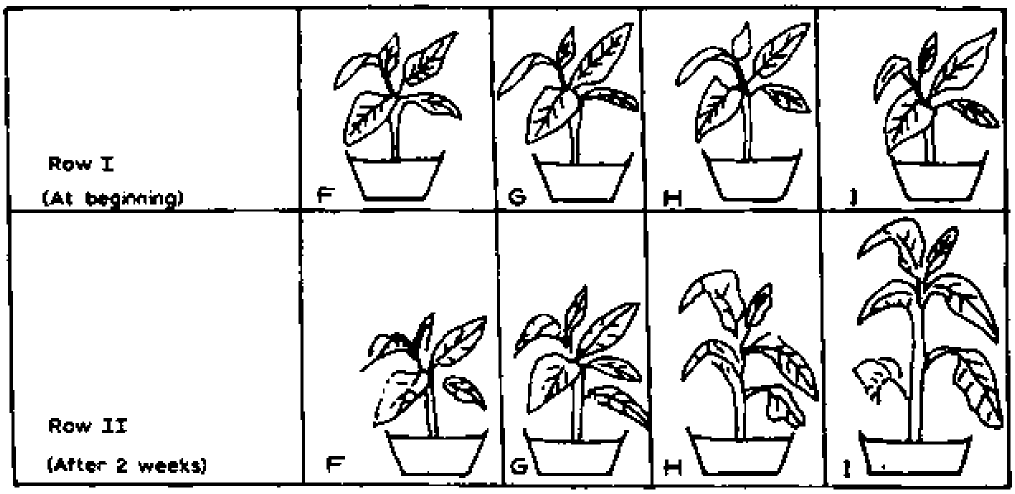

28. Which of the plants is likely to have been grown in loam soil?

A F
B G
C H
D I

29. Which of these shows the correct order of the life-cycle of a flowering plant?

A

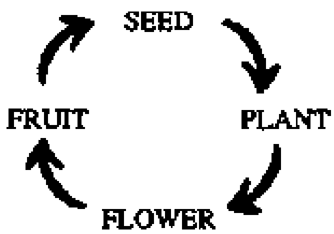

B

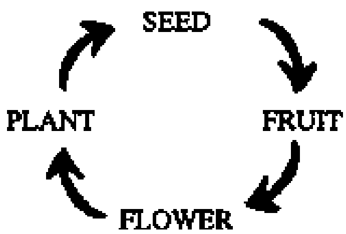

C

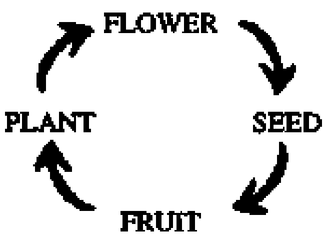

D

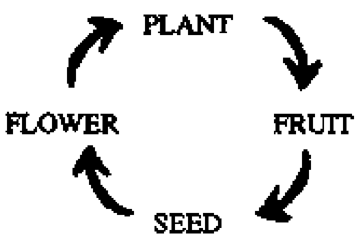

The diagram below shows an aquarium.

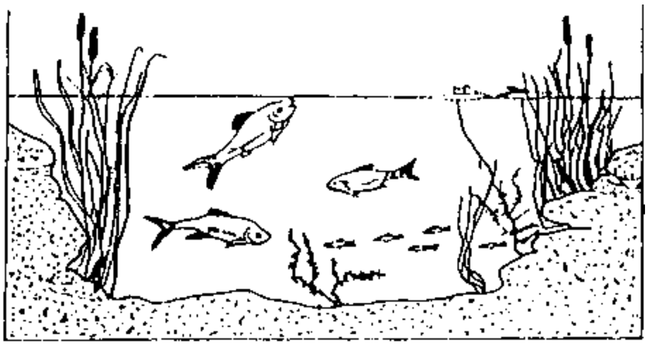

30. The water weed produces its own food. What is needed for this to take place?

A Movement
B Heat
C Sunlight
D Sound

31. The diagrams below show how plants were grown in a field for three years on the same plot.

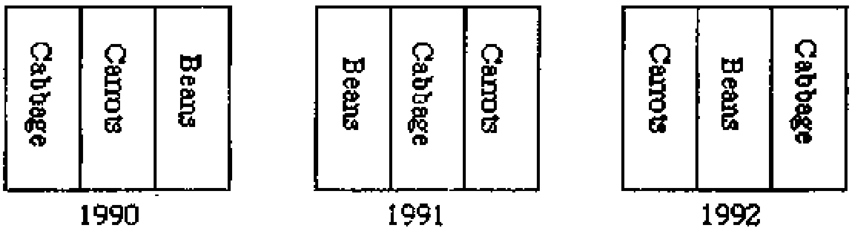

What farming practice is most likely to have been carried out?

A Row planting
B Broadcasting
C Fallowing
D Crop rotation

32. Soil erosion can be prevented by

A ploughing down the slope.
B cutting down of trees.
C over stocking.
D ploughing across the slope.

33. What happens to light as it shines on the mirror as shown in the diagram below?

A It is reflected.
B It is refracted.
C It is absorbed.
D It is emitted.

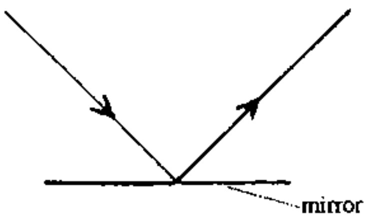

The table below shows temperatures recorded in the morning and at midday for houses P, Q, R and S roofed with different material.

House	Temperature in the morning	Temperature at midday
P with iron roof	15 °C	37 °C
Q with clay tiles roof	18 °C	28 °C
R with grass roof	20 °C	27 °C
S with asbestos roof	18 °C	34 °C

34. Which house shows the greatest rise in temperature?

A P
B Q
C R
D S

35. Which one of these instruments uses a string to produce sound?

A A guitar
B A drum
C A trumpet
D A flute

36. What would happen when the north pole of a magnet is brought near the north pole of a suspended magnet?

A They will attract.
B They will repel.
C Suspended magnet will lie in N-S direction.
D Suspended magnet will be demagnetised.

Dineo set an experiment shown in the diagram below to find substances through which electricity flows.

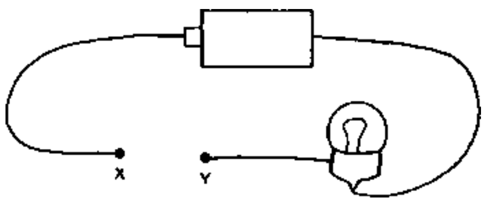

37. Which pair of substances would make the bulb light when they are connected between X and Y?

A Wood and paper
B Rubber and aluminium
C Glass and Plastic
D Iron and copper

38. What would happen when the number of coils is increased in the electromagnet shown below?

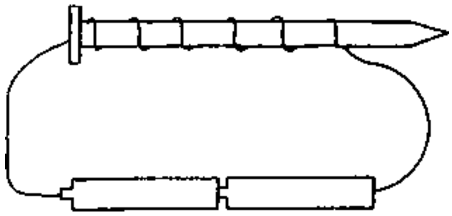

A The electromagnet would become weak.
B The nail would loose its magnetism.
C The electromagnet would become strong.
D The strength of the electromagnet would remain the same.

39. Which of the following connections would make the bulb light?

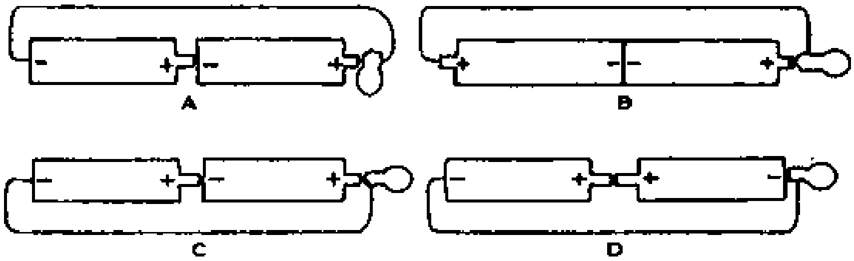

40. Which of these diseases is caused by lack of cleanliness?

A Scabies
B Syphilis
C Measles
D Malaria

41. Which of the chemicals shown below are dangerous when swallowed?

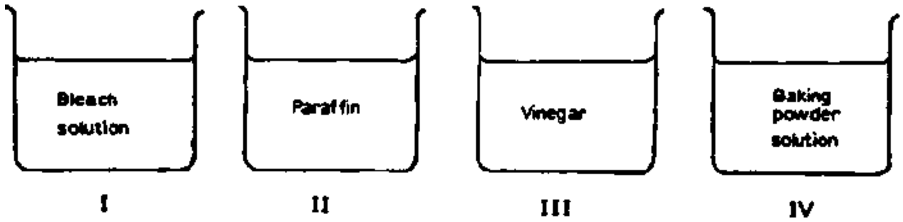

A II and IV
B III and IV
C I and III
D I and II

42. Who is most likely to be free from a sexually transmitted disease?

A
B
C
D

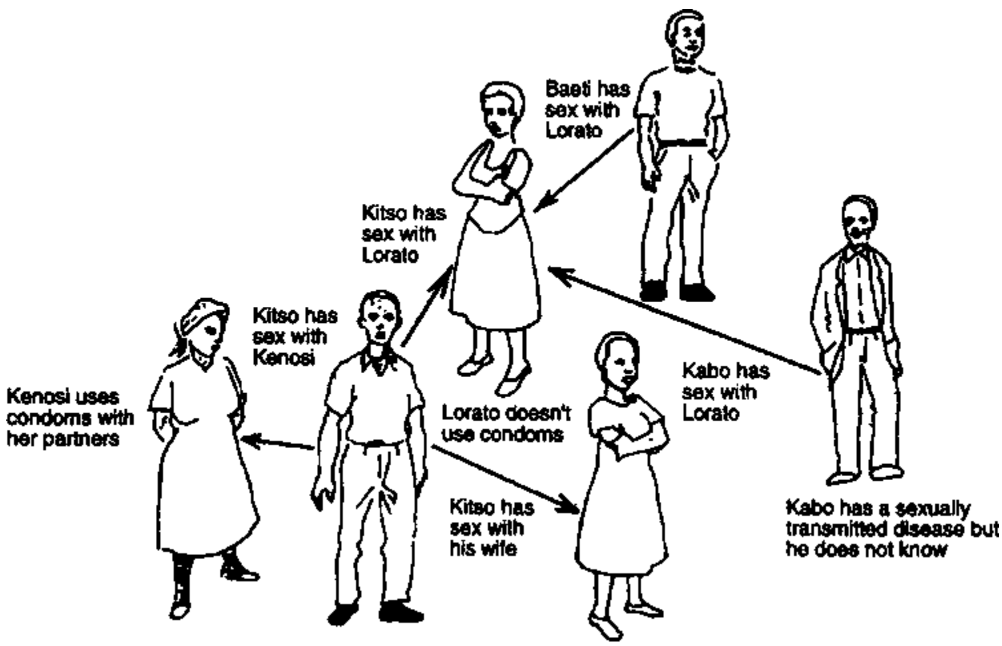

43. Which of the following foods would make a balanced meal?

A Porridge, meat and cabbage
B Samp, bread and porridge
C Meat, eggs, and fish
D Spinach, pumpkin and cabbage

44. Which of the following changes takes place in a boy at puberty?

A He becomes fat.
B His voice deepens.
C His hips grow larger and round.
D He grows hairs in the ears.

The table below shows the causes of death from accidents in the home in one country. Use it to answer questions 45 and 46.

Cause of Death	**Age group in years**					**TOTAL**
	0-4	**5-14**	**15-64**	**65-74**	**75+**	
Falls	21	6	334	359	2092	2812
Poisoning	10	8	398	53	56	525
Burns	57	26	192	94	270	639
Drowning	20	3	21	12	17	73
TOTAL	108	43	945	518	2445	4049

45. What was the cause of most deaths?

A Burns
B Poisoning
C Falls
D Drowning

46. What age group had most accidents?

A 0-4 years
B 15-64 years
C 65-74 years
D 75+ years

47. Which of the following methods of birth control can help to prevent pregnancy and spread of sexually transmitted diseases?

A Using birth control pills
B Using a loop
C Using a cream that kills sperms
D Using condoms

48. Which of the following drugs helps people to get well?

A Vaccine
B Alcohol
C Tobacco
D Medicine

The chart below is used to see if one is overweight, underweight or just the right weight. Use it to answer questions 49 and 50.

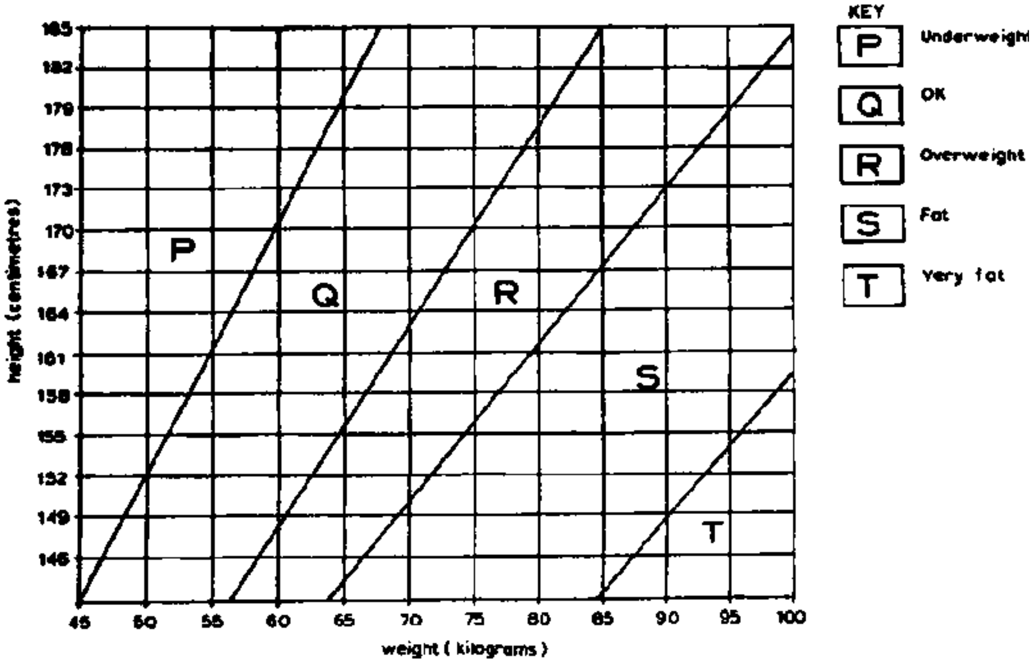

49. A person weighs 80 kilograms and is 176 centimetres tall. In which group is this person in?

A P
B Q
C R
D S

50. In which group is a person most likely NOT eating enough?

A P
B R
C S
D T

51. Smoking in young people may

A slow the growth of the body.
B make them grow taller.
C make them grow fat.
D deform their bones.

The diagram below shows some groups of foods.

W Carrots Spinach Tomatoes Oranges	**X** Sugar Potatoes Bread Rice
Y Eggs Beef Beans Chicken	**Z** Cheese Butter Groundnuts Margarine

52. Which foods would you eat for energy?

A W and X
B W and Y
C Z and X
D Z and Y

53. Which one of the following is part of the digestive system?

A Lungs
B Kidney
C Heart
D Small intestine

54. Which one of the following statements about smoking is NOT true?

A It is good for pregnant women.
B People who smoke cannot stop it easily.
C Smoking increases the chances of getting lung cancer.
D Smoking increases the risks of heart attack.

55. Which is the correct statement about the diseases cholera, typhoid and bilharzia?

A They can be prevented by vaccinating in children.
B People suffering from these usually get well after a few weeks.
C They are caused by lack of cleanliness of the body.
D Organisms causing them are spread by water with human waste.

The diagram below shows parts of the breathing system.

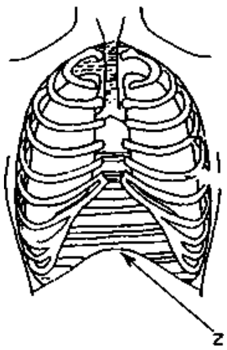

56. The part labelled Z is the

A lung.
B rib.
C diaphragm.
D wind-pipe.

Study the diagram of the system shown below.

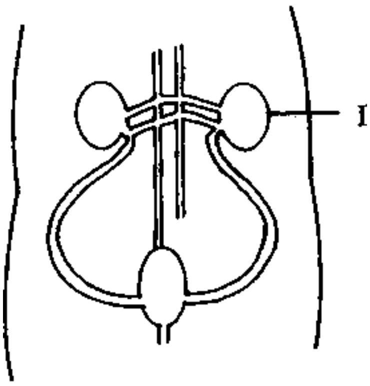

57. The part labelled I is the

A bladder.
B heart.
C kidney.
D ovary.

58. Stagnant water must not be kept near homes because organisms which spread ________ may breed in it.

A tuberculosis
B measles
C malaria
D scabies

59. Who is responsible for proper disposal of waste in towns and villages?

A Health Inspector
B Family Welfare Educator
C Police Officer
D Medical Officer

A group of students set an experiment shown in the diagram below. Each material shown on the labels was buried in the soil.

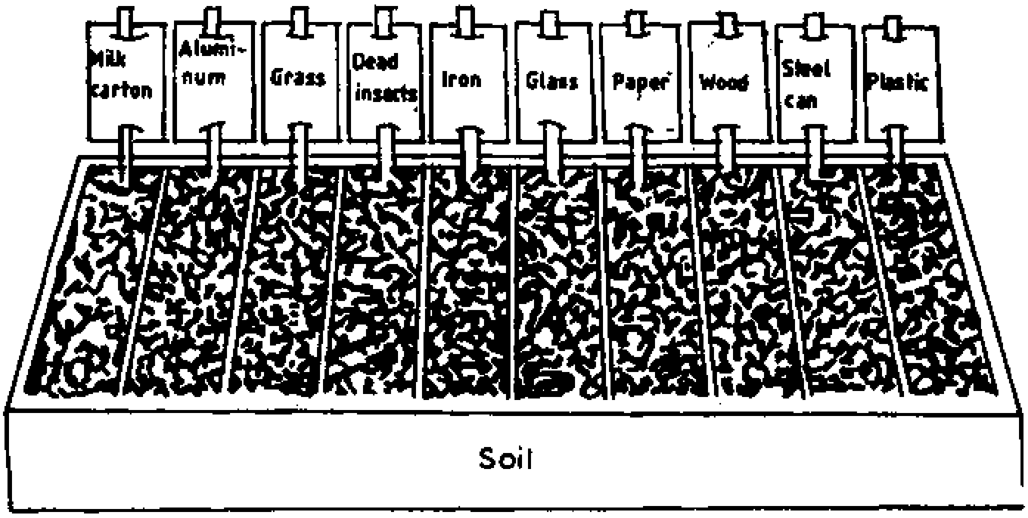

60. Which of the materials are going to be decomposed?

A Aluminium can, dead insects, wood, iron
B Paper, plastic, iron, steel can
C Grass, plastic, milk carton, aluminium can
D Grass, dead insects, paper and wood

3.1.4. 1993 Primary School Leaving Examination/Science Paper

REPUBLIC OF BOTSWANA
1993 PRIMARY SCHOOL LEAVING EXAMINATION

SCIENCE **TIME: 60 MINUTES**

Directions

1. Use HB pencil ONLY. DO NOT use ink or ball point.
2. Print your name on the answer sheet in the space provided.
3. Fill the oval by BOY if you are a boy or GIRL if you are a girl.
4. In the four boxes under CENTRE write your centre number.
   In the three boxes under STUDENT write your examination number. In the column of numbers below each box, fill the oval that has the same number that you entered in the box. Fill the ovals with heavy black marks that fill the oval:

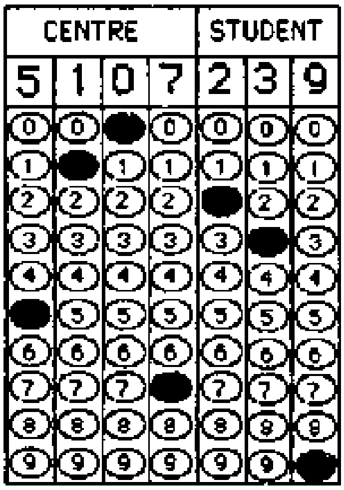

5. When you are told to begin, work as fast and as accurately as you can. If you cannot answer a question, do not spend too much time on it; go to the next question and come back to it later.
6. You may do rough work on the test paper or on a sheet of blank paper. DO NOT use the answer sheet for rough work.
7. Several possible answers are given for each question. Select the answer you think is the best and fill the oval for that answer on your answer sheet.
8. Be sure to fill the ovals like this:

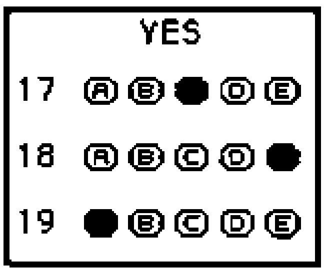

   Erase completely answers that you wish to change.
   Do not make any stray marks on your answer sheet.
   If more than one oval is filled for a question it will be marked wrong.
   Be sure the oval you fill on your answer sheet is for the question you are working on in the test paper.

DO NOT mark the ovals like this:

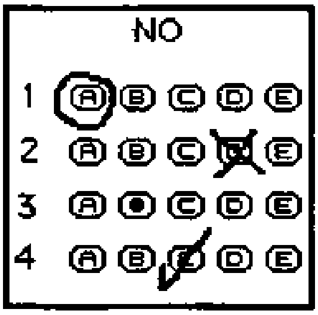

If you do, your answers will be marked wrong.

9. Sample questions are given to help you. Read them carefully before doing the questions.

Sample Questions

Sample 1 If a drum-skin is tightened its note will

A. increase in pitch.
B. decrease in pitch.
C. sound louder.
D. sound quieter.

SAMPLE 1

Sample 2 A man with a heavy cold finds his food tasteless because

A. the cold germs kill the taste of the food.
B. the cold germs numb the taste buds.
C. his blocked nose cuts out his sense of smell.
D. he has lost his appetite.

SAMPLE 2

DO NOT TURN OVER THE PAGE UNTIL YOU ARE TOLD TO DO SO

<u>Questions 1 and 2</u>

Mpho was sick for a week. The graph below shows his body temperature recordings.

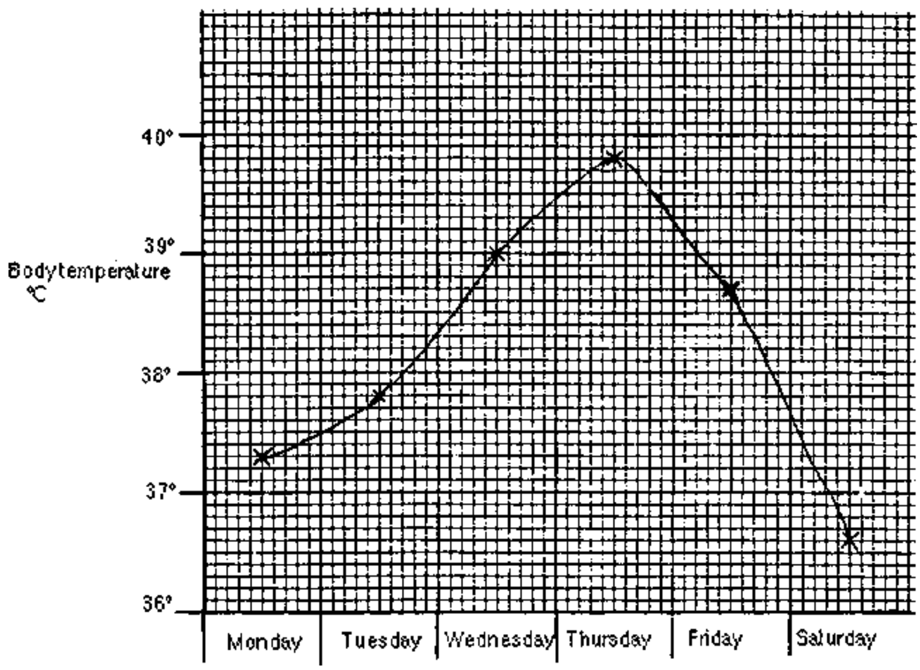

1. What was Mpho's temperature on Monday?

A 37,3 °C
B 37,5 °C
C 37,6 °C
D 38,7 °C

2. On what day was Mpho's temperature 36,6 °C?

A Monday
B Tuesday
C Thursday
D Saturday

3. What type of animal is a snake?

A A mammal
B An amphibian
C A reptile
D A fish

4. The best food for a baby is

A cow's milk.
B goat's milk.
C mother's milk.
D milk powder.

5. Which of these will melt when heated?

A Paper
B Cotton
C Leather
D Plastic

6. To which part of a plant are insects mostly attracted?

A Flower
B Leaf
C Stem
D Root

7. Plants kept in the dark become thin and yellowish because they lack

A air.
B sunlight.
C manure.
D water.

Questions 8 and 9

The graph below shows rainfall recordings for some places in Botswana for a day in January.

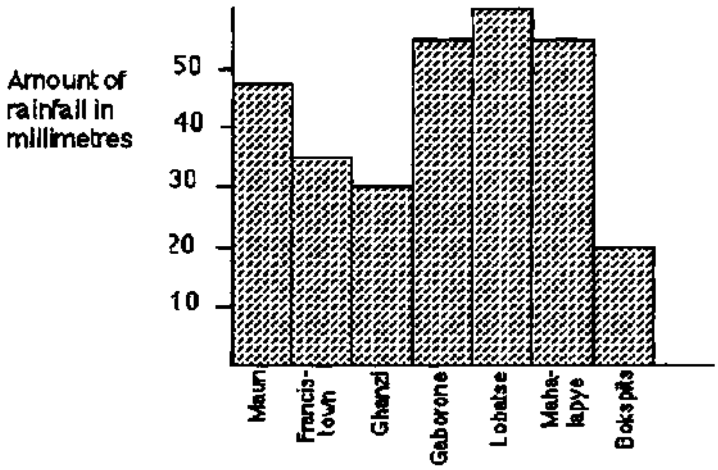

8. The place with the least amount of rainfall recorded is

A Lobatse.
B Ghanzi.
C Bokspits.
D Francistown.

9. Which place had more rain than Gaborone?

A Francistown
B Maun
C Mahalapye
D Lobatse

10. Select the diagram that correctly shows the water cycle.

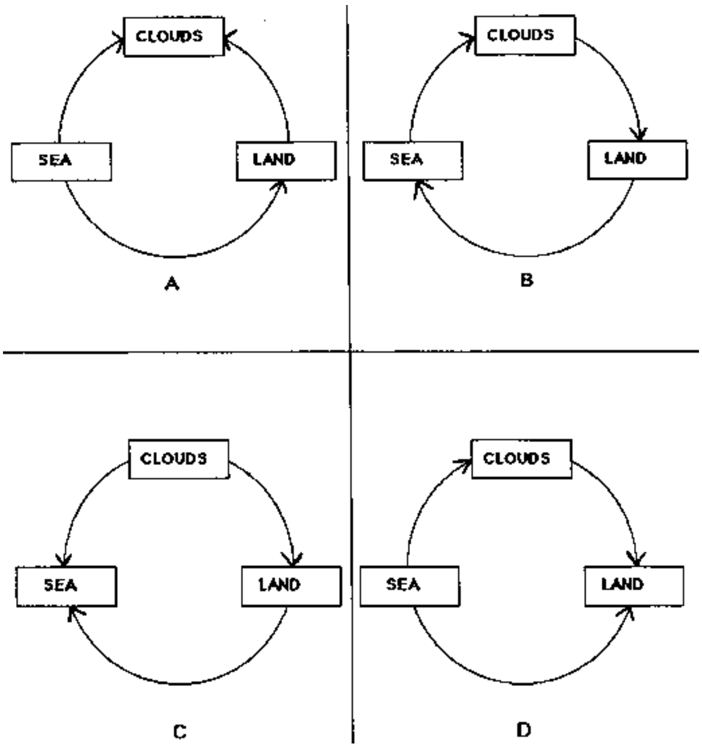

11. Which of the following types of soil is the most fertile?

A Clay
B Sand
C Loam
D Gravel

12. The picture below shows part of a wire to be connected to the "live" pin of an electric three-pin plug.

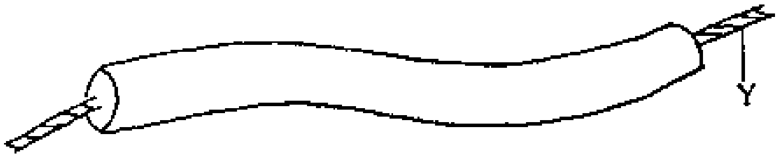

Which of the following materials can be used to make part **Y**?

A Rubber
B Plastic
C Copper
D Wood

13. Which organ pumps blood to all parts of the body?

A Brain
B Kidney
C Liver
D Heart

14. The largest cause of death among smokers is

A heart attack.
B tuberculosis.
C lung cancer.
D cancer of the liver.

15. What are infectious diseases? They are diseases which

A can easily be passed on from person to person.
B are caused by a shortage of a particular food.
C cannot be cured.
D only infect young people.

16. The following diagram shows part of a human skeleton.

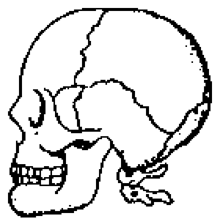

Which of the following is a function of this part? It protects the

A heart.
B brain.
C heart and lungs.
D brain and lungs.

17. The most likely way to get a sexually transmitted disease is by

A sharing toilets used by infected people.
B kissing or touching another person.
C having sexual intercourse with an infected person.
D sharing cups and plates with other people.

18. Which of the following objects **changes movement** energy to **sound energy**?

A Lamp
B Battery
C Guitar
D Match stick

Questions 19 and 20

The graph below shows the volume of water used in Botswana from 1980 to 1985.

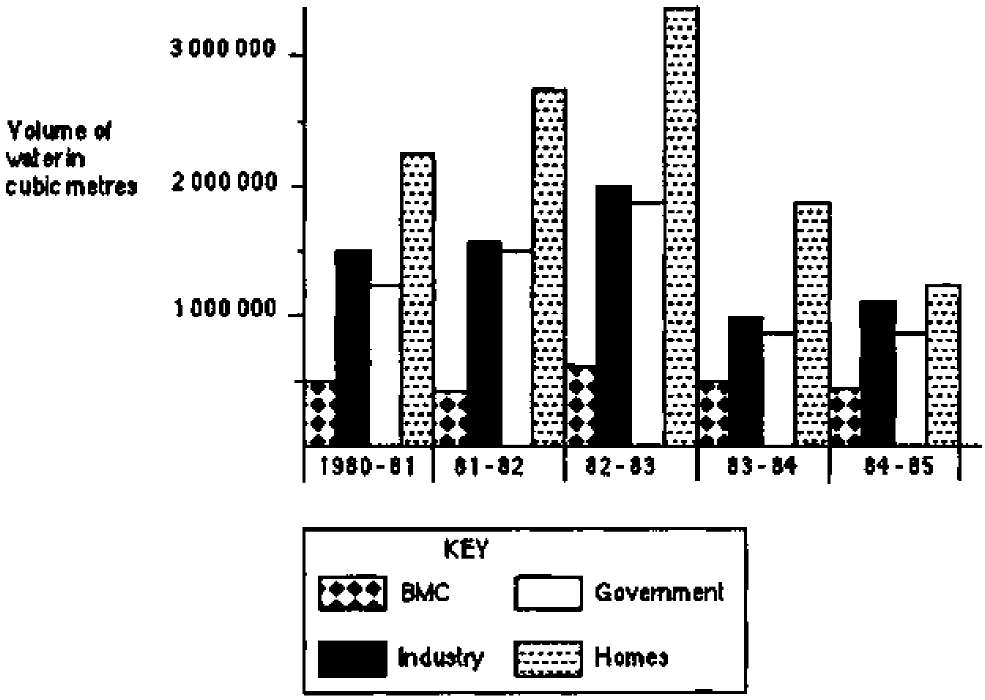

19. The largest use of water during 1984-85 was in

A BMC.
B industry.
C government.
D homes.

20. How much water was used at BMC in 1980-81?

A 500 000 m^3
B 1 000 000 m^3
C 1 500 000 m^3
D 2 250 000 m^3

21. Select the diagram that represents a battery.

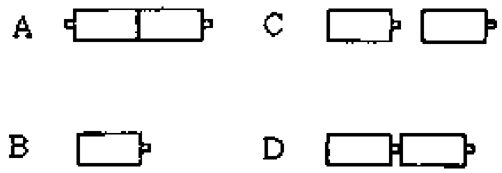

22. The season that has longer nights and shorter days is

A summer.
B autumn.
C winter.
D spring.

Questions 23 to 27

Choose diseases from the list below to answer questions 23 to 27.

A Bilharzia
B Malaria
C Scabies
D Diarrhoea

23. For which of the diseases above should patients be given an oral rehydration drink?

24. Which of the diseases above is caused by a blood fluke?

25. Which of the diseases above is the commonest among children under 5 years in Botswana?

26. Which of the diseases above is spread by mosquitoes?

27. Which of the diseases can be prevented by regular washing of the body?

28. If the south pole of a magnet is brought near the north pole of another magnet, the two magnets will

A remain at rest.
B attract one another.
C repel one another.
D point in the north-south direction.

29. Which of the following substances will dissolve in water?

A Chalk dust
B Sand
C Sugar
D Bread flour

30. Which of the following parts of the body is the hardest?

A Skin
B Hair
C Muscle
D Bone

31. Which of the following does not make a healthy mother?

A Having babies every year
B Spacing children
C Having fewer children
D Breast feeding her babies

32. What instrument is used to measure humidity?

A Hygrometer
B Rain gauge
C Speedometer
D Anemometer

33. The purest form of natural water is

A river water.
B pond water.
C well water.
D rain water

34. Which of the following are all agents of soil erosion?

A Water, wind and animals
B Animals, plants and wind
C Wind, water and plants
D Animals, water and plants

35. The part of the human eye through which light passes to the inside is called the

A iris.
B pupil.
C cornea.
D retina.

36. Which of the following forms of energy do we need to cook our food?

A Electrical energy
B Heat energy
C Light energy
D Solar energy

37. Which of the following statements is true about plants?

A All leaves have the same shape.
B Green plants can make their own food without sunlight.
C The stem holds fruits and flowers.
D The root holds plants firmly to the ground.

38. Which of the following statements best describes soil erosion?

A It is the breaking down of rocks to form soil.
B It is the layers that make up the soil.
C It is the removal of mineral salts from the soil.
D It is the removal of topsoil.

39. Which of the following factors does not control the weather?

A Pressure

B Week day
C Sun
D Humidity

40. The most likely reason for having windows on two opposite sides of a room is to

A make the house look beautiful.
B allow people to escape if there is a fire.
C allow movement of air for ventilation.
D enable one window to be closed while the other is open.

41. In which of the following conditions will wet clothes dry fastest?

A In moving, hot air
B In moving, damp air
C In still, hot air
D In still, cool air

42. What source of energy does a solar heater use?

A Moonlight
B Sunlight
C Electricity
D Gas

43. Four groups of pupils A, B, C and D collected some small animals and classified them as follows:

Group	**Body parts**	**Jointed legs**	**Wings**
A	3	6	1 or 2 pairs
B	2	6	1 pair
C	2	8	0
D	3	8	2 pairs

One of the animals collected was a spider. Which group could have collected the spider?

44. Maize, cooking oil, honey, sugar and butter are all good examples of

A energy-giving foods.
B foods dangerous to health.
C protective foods.
D body-building foods.

45. The diagram below shows a soil profile.

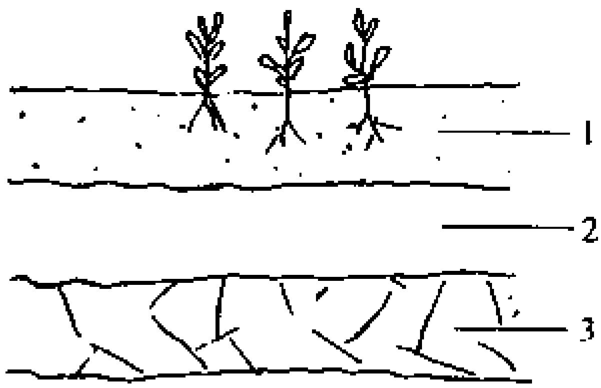

What is layer 3?

A Topsoil
B Subsoil
C Parent rock
D Sandy soil

46. Which of the following is used for preventing disease?

A Nicotine
B Aspirin
C Alcohol
D Vaccine

47. What does the road sign shown below mean?

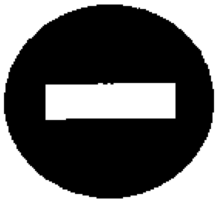

A Road crossing with another.
B For pedestrian crossing.
C One-way road.
D No entry.

48. In which direction does a compass needle point?

A North
B South
C East
D West

49. The diagram below shows a lever.

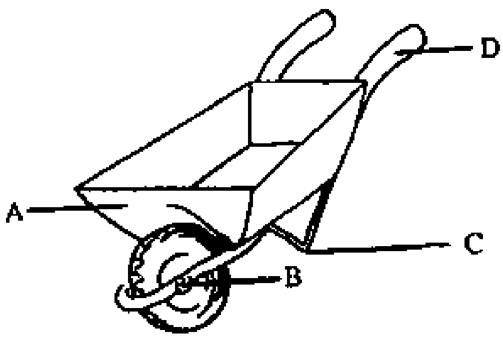

Which of the parts labelled A, B, C or D is the pivot?

50. What do plants get from humus?

A Mineral salts
B Chlorophyll
C Oxygen
D Water

51. Tebogo added water to soil in a tin. She observed bubbles coming out. This is because

A soil breathes air.

B water has air.
C soil has air.
D bacteria in the soil produce air.

52. Which of the following statements about AIDS is false?

A AIDS affects men, women and children.
B A person with AIDS can look perfectly healthy.
C AIDS is spread through shaking hands.
D AIDS is caused by a virus.

53. Badiri wanted to make a square using four bar magnets as shown in the diagram below.

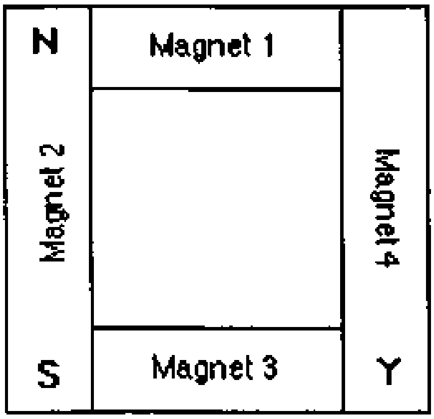

What should pole Y be for him to succeed?

A North
B South
C West
D Neutral

Questions 54 and 55

The diagram below shows how infections can be spread because of poor hygiene.

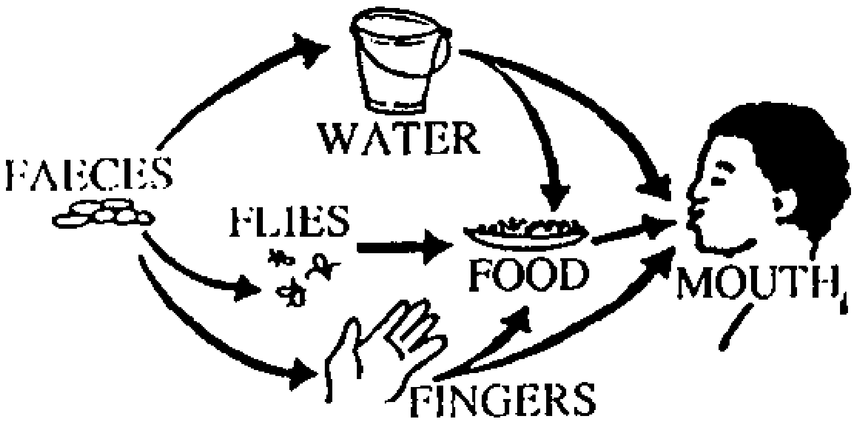

54. Which of the following paths of infection is NOT represented in the diagram?

A Faeces ⇒ soil ⇒ food ⇒ mouth
B Faeces ⇒ skin ⇒ mouth
C Faeces ⇒ flies ⇒ food ⇒ mouth
D Faeces ⇒ water ⇒ mouth

55. Which of the following diseases is likely to be spread by the water?

A Polio
B Measles
C Cholera
D Whooping cough

56. Which of the following is NOT looked after by the Council Health Services?

A Planting vegetables
B Food hygiene
C Preventing spread of disease
D Rubbish disposal

57. Which of the following will cause physical weathering of rocks?

A Water, temperature change and oxygen
B Water, wind and oxygen
C Wind, temperature change and oxygen
D Water, temperature change and wind

58. A student set up the following circuit and observed that the bulb lit normally. He connected a mystery box, W, to the circuit and observed that the bulb lit more brightly.

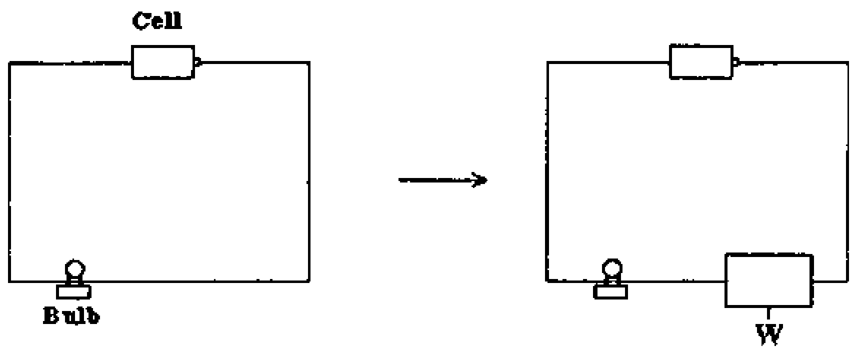

What does the mystery box contain?

A another bulb
B a piece of wire
C another cell
D a strip of plastic

59. How does heat travel from the sun to the earth?

A Radiation
B Reflection
C Convection
D Conduction

60. The diagram below shows toothed gear wheels connected by a chain.

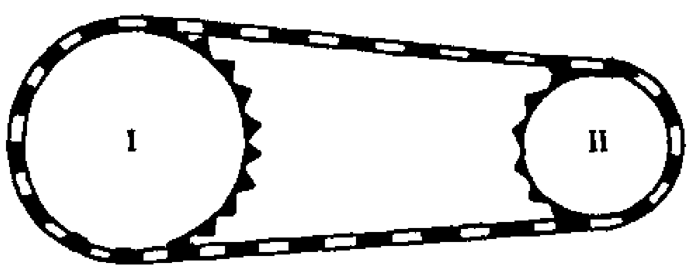

If gear **I** is turned clockwise, gear **II** will turn

A clockwise.
B anticlockwise.
C sideways.
D upwards.

3.2. Kenya

3.2.1. Overview

End of Primary School Examination

1, Title of examination:	Kenya Certificate of Primary Education (KCPE)
2. Amount of fees charged:	≈ US$ 4.5
3. Examination after years in primary school (6, 7, 8 years):	8 yrs
4. Children's entry age in primary school:	6 yrs
5. Number of pupils sitting examination in 1994:	395,765
6. Examination subjects offered:	14 subjects, 7 compulsory papers: • English • Kiswahili • Mathematics • Science & Agriculture • Art & Craft, Music • Business Education & Home Economics • GHC (Geography, History, Civics), Religious Education (Christian or Islamic or Hindu)
7. Language of examination:	English (except for Kiswahili paper)
8. Institution setting the examination questions:	Kenya National Examinations Council
9. Have there been any reforms in the examination questions?	Yes
When? (year)	1985
What kind?	There was a shift from simple recall questions to higher-order questions.
10. Stages of development of examination questions (please describe):	• Invitation of setters • Setting of questions • Pre-moderation of questions • Final moderation

11. Type of examination questions and distribution of different kind of questions.	All are multiple-choice questions with: 26% recall questions 33% comprehension 24% application 17% higher abilities
12. Is continuous assessment incorporated in the final examination?	Yes [ ] No [x]
13. Are examination items pretested?	Yes [ ] No [x] The set KCPE papers are not pretested because of technical problems (inadequate time, costs involved, security).
14. Which professional groups are involved in setting the examination questions?	• Primary school teachers • Tutors of TTCs • Examination Officers
15. Are the same professionals who set the examination questions involved in marking papers?	Yes [x] No [ ]
16. How are examination results used for improving teaching in primary schools?	Primary school teachers change their teaching strategies to improve performance in examination.
17. To what other uses are the examination results put?	• Selection • Certification
18. Main problem with Primary School Leaving Examinations?	Assessment of practical skills

3.2.2. Writing of Test Items for the Primary School Leaving Examination in Kenya

by Philip M. Kitui, Kenya National Examinations Council

Background

The primary education course in Kenya takes eight years. The Kenya Certificate of Primary Education examination was administered for the first time in November 1985 by the Council to primary school leavers who had completed the first cycle of the 8.4.4. Education System. The examination consists of seven compulsory papers and tests each of the pupils in 14 subjects namely, English, Kiswahili, Mathematics, Science, Agriculture, History, Civics, Geography, Music, Craft, Home Science, Art, Business Education and either Christian Religious Education, Islamic Religious Education or Hindu Religious Education. Over the last years about 400,000 candidates took the examination annually.

Objectives of the KCPE Examination

The objectives of the KCPE examination are:

1) To rank candidates according to their achievement in all the subjects offered in the examination. This ranking facilitates fair selection for further education.

2) To award certificates to persons who have completed primary education. Every candidate who sits the KCPE examination is awarded a certificate in which his/her attainment in each of the subjects he/she sat is indicated by means of a letter grade and a standard score.

3) To generate data on candidates' performance that can be used in the evaluation of the curriculum and effectiveness of instruction in the primary schools. For the KCPE examination to facilitate a fair allocation of the limited opportunities for further education and training to over 400,000 candidates, it has to be objective. Thus it must satisfy the psychometric criteria for a good test, namely: validity, reliability and efficiency. Administration of the test should also be cost-effective. Hence the Kenya National Examinations Council uses objective items of the multiple-choice type for most of the papers. Each item has four options, one of which is the key. In addition to an objective paper, each of the two language subjects, English and Kiswahili, is tested by means of a composition.

For the practical subjects like Science, Agriculture and Home Science, questions testing practical skills are part of the written test.

However, there is a school-based practical assessment of these subjects and other subjects of the school curriculum conducted by the Ministry of Education for the purpose of awarding specially revamped primary school leaving certificates. School-based assessment was started in 1984 as a Government policy. This approach is superior and has the support of modern thinking on certification. The modern approach is dichotomous, the examination certificate being supported by a profile from the school. In our case, the school leaving certificate is a basis for this approach and needs to be strengthened.

The KCPE examination papers for each subject are based on national syllabi developed by the Kenya Institute of Education. These, syllabi specify both the objectives of the learning activities and the content and skills to be learned. In so doing, they set the levels of competence expected of a learner who completes the course in any subject.

Development of the KCPE Examination Papers

For each of the subjects it examines, the Kenya National Examinations Council has employed a tests and measurement specialist who is also an expert in the subject. This person not only plans the work and schedules necessary for the development of tests but also provides guidance in the area of tests and measurements to contracted professional people appointed by the Council to perform the functions of setters and moderators. The development of a test paper for the KCPE examination is carried out through the following stages:

Stage 1: The Council identifies and appoints six professional educators as setters for the paper. For each subject, persons identified must

(1) have had practical experience in either teaching at the primary school level or in the development of the primary school curriculum for the subject;

(2) be trained teachers who are competent in the subject;

(3) be men and women of proven integrity;

(4) be conversant with the technicalities of writing multiple-choice test items;

(5) not be preparing candidates for the KCPE examination.

Stage 2: The subject specialist and the setters prepare a table of specifications for the test. The specifications are the blueprint for the test. They show the syllabus content and cognitive skills to be tested, the number of questions for each type of content and cognitive skill. Drawing up this table enables the setters to identify a representative sample of content for the test as well as spread the skills to be tested so that the test as a whole can discriminate effectively between candidates of different levels of achievement.

Stage 3: The setters divide up the work of writing test items on various units of content and skills. The council tests and measurement specialist goes over the expected qualities of test items and reminds the setters of the precautions they must take to safeguard security of the drafts they will work on. In the course of writing items, the setters meet to discuss the items they have come up with. During the discussions poor items are discarded and shredded while advice is given on items that must be improved upon. In the end, the setters put together a draft question paper which they submit to the Council through the tests and measurement specialist. The draft is then kept in a secure place to await moderation.

Stage 4: Moderation of the draft test items is done by a group of 10 experts. They include the six setters and four other experts identified on the basis of the criteria used for identifying the setters. The moderation meeting is chaired by a senior tests and measurement specialist. It may take two to five full working days depending on the quality of items produced by the team of setters. During the period of moderation, some of the questions may be replaced while others will be re-worded.

Stage 5: The tests and measurement specialist, who is also secretary to the moderation committee for the subject, writes a neat draft of the paper and ensures that all the necessary diagrams, graphs and pictures are drawn in their final form and labelled correctly. The specialist proofreads the paper as it is typeset and printed and advises on necessary corrections. For the English Composition and Kiswahili Insha papers only one setter is commissioned for the setting. The team of moderators for each of these two papers goes over the drafts with as much thoroughness as for papers consisting of multiple-choice questions. However, they take less time on their work because they moderate only one composition/Insha.

The skills required for writing test items can only be acquired through intensive practical training. The item writer needs to be familiar with the types and varieties of test items and with their possibilities and limitations. The Kenya National Examination Council mounts item-writers' workshops regularly to train item writers for its examinations. This is a practice that should be encouraged and supported financially by national examining boards, and local and international organisations. The financial support should incorporate training-of-trainers at such internationally recognized testing centres as the Educational Testing Service of the United States of America and the local Examinations Syndicate of the United Kingdom.

3.2.3. KCPE 1994/Science and Agriculture Paper

THE KENYA NATIONAL EXAMINATIONS COUNCIL

KCPE 1994

SCIENCE AND AGRICULTURE

Time: 2 hours

READ THESE INSTRUCTIONS CAREFULLY

1. You have been given this question booklet and a separate answer sheet. The question booklet contains 60 questions.

2. Do any necessary rough work in this booklet.

3. When you have chosen your answer, mark it on the **ANSWER SHEET,** not in this question booklet.

HOW TO USE THE ANSWER SHEET

4. Use only an ordinary pencil.

5. Make sure that you have written on the answer sheet:

YOUR INDEX NUMBER

YOUR NAME
NAME OF YOUR SCHOOL

6. By shading the correct numbered ellipses (small oval shapes) mark your full Index Number (i.e. School Code Number and three-figure Candidate's Number) in the grid near the top of the answer sheet.

7. Do not make any marks outside the ellipses.

8. Keep the sheet as clean as possible and **DO NOT FOLD IT.**

9. For each of the questions 1-60 four answers are given. The answers are lettered A, B, C, D. In each case only **ONE** of the answers is correct. Choose the correct answer.

10. On the answer sheet, show the correct answer by shading the ellipse in which the letter chosen is written.

Example

In the **Question Booklet:**

16. The pressure exerted by a liquid depends on its

A. volume
B. depth
C. surface area
D. mass.

The correct answer is **'B'.**

On the **Answer Sheet:**

16 (A) ● (C) (D)
17 (A) (B) (C) (D)
18 (A) (B) (C) (D)
19 (A) (B) (C) (D)
20 (A) (B) (C) (D)

In the set of ellipses numbered 16, the ellipse with B in it is shaded.

11. Your shading MUST be within the ellipse. Make your shading as **DARK** as possible.

12. For each question ONLY ONE ellipse is to be shaded in each set of four ellipses.

This Question Paper consists of 8 printed pages.

SCIENCE

1. A charcoal burner was used to boil water and the steam produced was used to turn a turbine.

Which one of the following shows the correct order of the energy changes that took place from the time the charcoal was lit to the time the turbine turned?

A. Chemical heat mechanical.
B. Heat chemical mechanical.
C. Chemical mechanical heat.
D. Heat mechanical chemical.

2. The diagram below represents a solar heater.

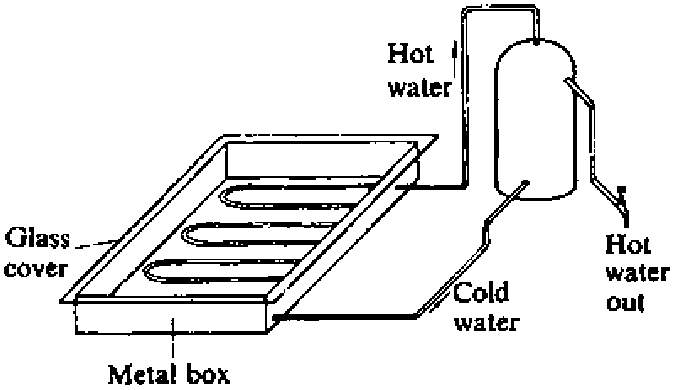

Which of the following would make the water heat up faster?

A. Painting the pipe black and the inside of the metal box white.
B. Painting the glass cover white and the inside of the metal box black.
C. Painting the pipe black and reducing the number of coils.
D. Painting both the pipe and the inside of the metal box black.

3. The purpose of a fuse in a circuit is to

A. break the circuit when necessary
B. reduce the current
C. switch the current on and off
D. complete the circuit.

4. Which one of the following mixtures can be separated by decanting?

A. Sand and water.
B. Sand and sugar.
C. Salt and water.
D. Salt and iron filings.

5. Which one of the following is **NOT** a correct method of determining whether a piece of metal is a magnet or not?

A. Repulsion between the metal and a magnet.
B. Attraction between the metal and a magnet.
C. Attraction between the metal and a pin.
D. Suspending the piece of metal in air to observe the direction it points to.

6. Standard seven pupils carried out an investigation on mixing liquids. They used four liquids **P**, **Q**, **R** and **S** and made the following observations:

Liquid **P** mixed with liquid **Q**
Liquid **P** mixed with liquid **R**
Liquid **Q** mixed with liquid **R**
Liquids **P**, **Q**, **R** did not mix with liquid **S**.

They then poured all the four liquids into a transparent bottle and shook the bottle.

The number of layers that were formed is

A. one
B. two
C. three
D. four.

7. Which one of the following gases makes approximately one fifth of air by volume?

A. Nitrogen.
B. Carbon dioxide.
C. Oxygen.
D. Water vapour.

8. A drinking glass was inverted over water in a basin and pushed down as shown in the diagram below.

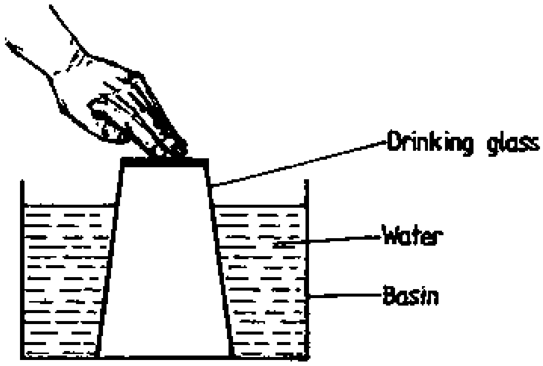

Water did not enter the glass because

A. air occupies space
B. water is denser than air
C. the glass is upside down
D. water cannot move upwards.

9. The correct unit for expressing density is

A. g
B. g/cm
C. g/cm^2
D. g/cm^3.

10. A boat sinks deeper in a fresh water lake than in sea water. This happens because sea water differs from lake water in

A. mass
B. volume
C. density
D. weight.

11. A section through a bean seed is shown in the diagram below.

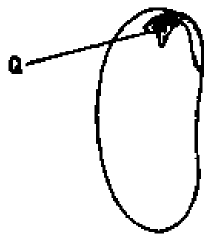

The part labelled **Q** is the

A. hilum
B. plumule
C. radicle
D. cotyledon.

12. Which one of the following diagrams represents the beak of a flesh eating bird?

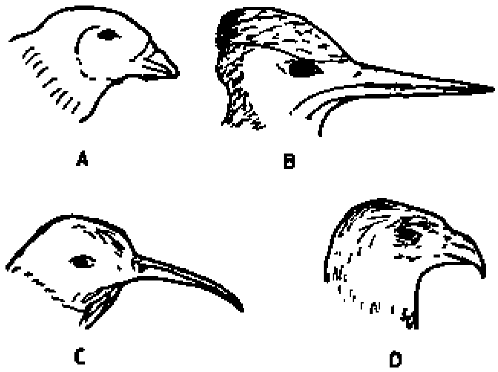

13. Which one of the following parts of a flower is correctly matched with its function?

	Part	Function
A.	Stigma	Produces pollen grains.
B.	Petals	Attract insects.
C.	Anther	Receives pollen grains.
D.	Style	Holds the anther.

14. Use the information below to answer the question that follows.

Frogs eat grasshoppers.
Grasshoppers eat grass.
Snakes eat frogs.

From this information, which one of the following is the correct food chain?

A. Frogs ⇒ grasshoppers ⇒ grass ⇒ snakes.
B. Snakes ⇒ frogs ⇒ grasshoppers ⇒ grass.
C. Grass ⇒ grasshoppers ⇒ frogs ⇒ snakes.
D. Grass ⇒ grasshoppers ⇒ snakes ⇒ frogs.

15. Which one of the following seeds is NOT correctly matched with its agent of dispersal?

	Seed	Agent
A.	Pawpaw	Animal.
B.	Coconut	Water.
C.	Black jack	Animal.
D.	Castor	Wind.

16. Which one of the following parts of an insectivorous plant is adapted for trapping insects?

A. Flower.
B. Leaf.
C. Stem.
D. Fruit.

17. The correct life cycle of a mosquito is

A. adult larva pupa egg
B. egg pupa larva adult
C. adult pupa larva egg
D. egg larva pupa adult.

18. The thick layer of fat under the skin of a whale is for

A. keeping the skin of the whale oily
B. making the whale heavier
C. keeping the body of the whale warm
D. making the whale float in water.

19. Mary cut four pieces from a yam whose shapes are as shown in the diagrams below.

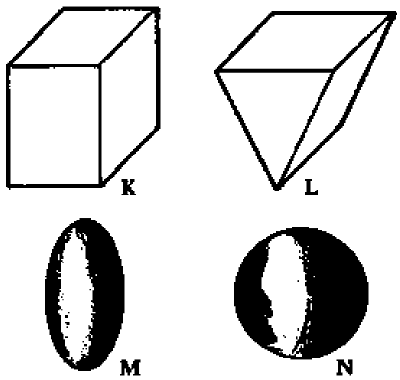

She then held each piece by the top and pushed it downwards in a jar containing water. Which one of the pieces would Mary find easier to push down?

A. **K.**
B. **L.**
C. **M.**
D. **N.**

20. The diagram below represents a simple machine.

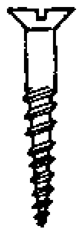

Which one of the following simple machines is of the same type as the one shown in the diagram?

A. Gear wheel.
B. Crow bar.
C. Winch.
D. Inclined plane.

21. In which of the following **pairs** do both machines have the fulcrum between the load and the effort?

A. Bottle opener, wheel barrow.
B. Seesaw, pliers.
C. Hammer, nut cracker.
D. Pair of scissors, fishing rod.

22. Two identical containers **P** and **Q** containing water were balanced on a beam. The set up is as shown in the diagram below.

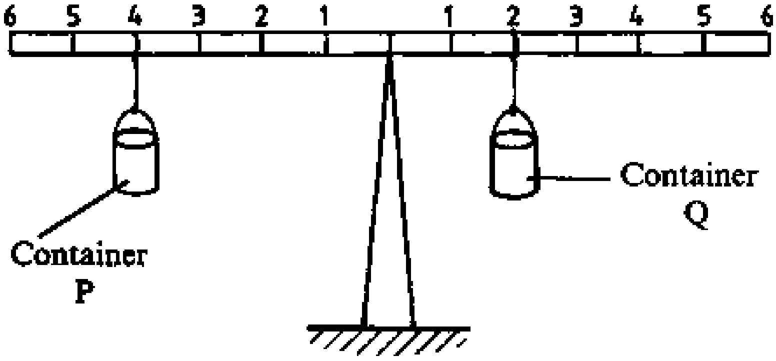

Which one of the following statements about the set up is **CORRECT?**

A. Container **P** contains as much water as **Q**.
B. Container **P** contains a quarter as much water as **Q**
C. Container **P** contains half as much water as **Q**.
D. Container **Q** contains half as much water as **P**.

23. The diagram below represents a simple machine that can be used to raise water from a well.

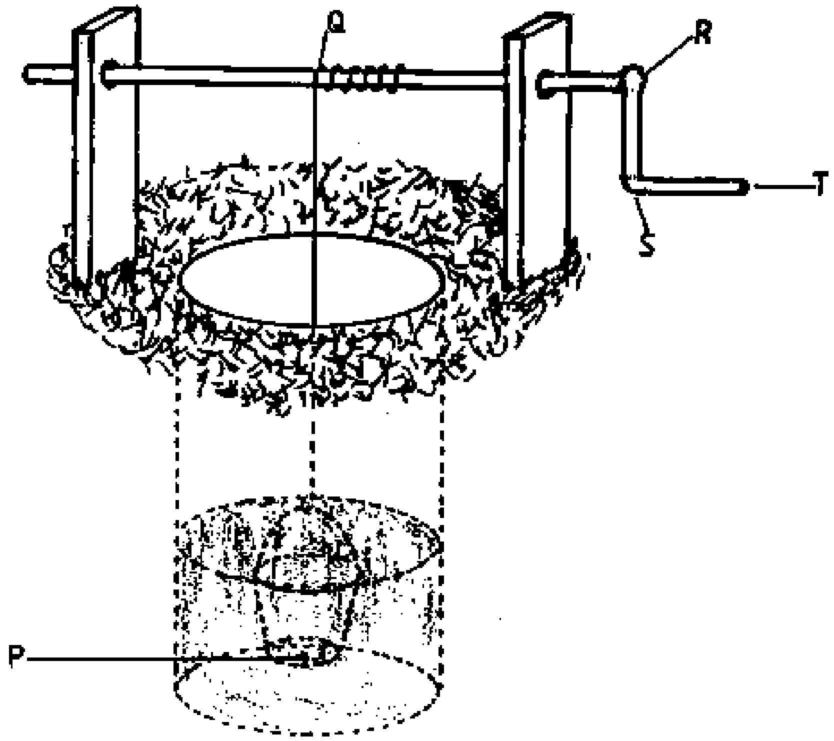

Which one of the following is the effort distance?

A. PQ.
B. QR.
C. RS.
D. ST.

24. An experiment was set up as shown in the diagrams below.

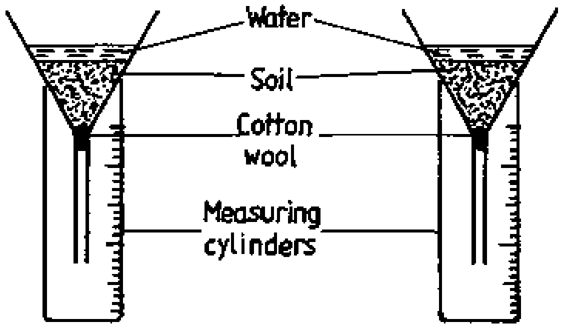

The experiment was to investigate

A. water retention by different types of soil
B. capillarity in different types of soil
C. amount of air in different types of soil
D. amount of humus in different types of soil.

25. The set-ups shown in the diagram below were used to investigate how water moves up in different types of soil.

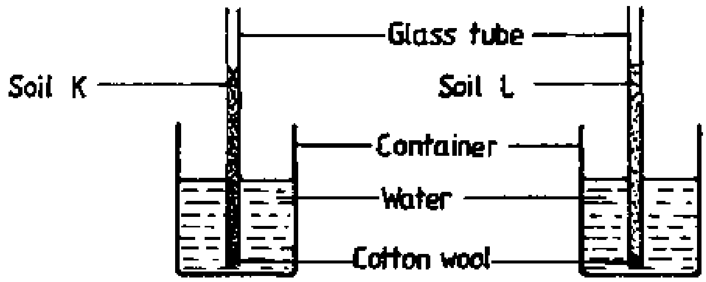

Which one of the following need **NOT** be the same in both set-ups?

A. Size of containers.
B. Size of glass tubes.
C. Amount of cotton wool in each glass tube.
D. Amount of soil in each glass tube.

26. When the arrow of a wind vane points to the east, the wind must be blowing from

A. South to North
B. West to East
C. North to South
D. East to West.

27. The rotation of the earth on its axis causes

A. day and night
B. phases of the moon
C. high and low tides
D. seasons.

28. Which one of the following materials **DOES NOT** pollute the environment?

A. Sawdust.
B. Broken pieces of glass.
C. Plastic paper bags.
D. Metal cans.

29. Cancer of the lungs may be caused by excessive

A. chewing of khat *(miraa)*
B. sniffing of glue
C. smoking of cigarettes
D. drinking of beer.

30. Which one of the following drugs is **NOT** extracted from plants?

A. Bhang.
B. Mandrax.
C. Cocaine.
D. Heroin.

AGRICULTURE

31. Why is it recommended to transplant seedlings late in the afternoon?

A. To give a farmer time to prepare the field in the morning.
B. To avoid withering of seedlings due to strong heat.
C. To ensure that the ground is warm enough for the seedlings.
D. To allow the farmer to work when the day is cool.

32. During a visit to a local farm, Standard VII pupils found one cow lying down and unable to rise up. The cow died later. What would have been the **best** way of disposing of the dead cow?

A. Throwing it away from the farm.
B. Selling it to a local butcher.
C. Skinning it and boiling the meat for pets.
D. Burying it deep in the ground.

33. Which one of the following is the correct tool for pruning small coffee branches?

A. Handsaw.
B. Sickle.
C. Secateurs.
D. Hacksaw.

34. The purpose of placing litter on the floor of a brooder is to

A. make the floor comfortable
B. keep the floor clean
C. keep the floor dry
D. keep the floor free from pests.

35. Which one of the following practices is carried out in order to produce clean eggs in a deep litter system of poultry rearing?

A. Supplying green vegetable matter to the layers.
B. Providing oyster shells to the layers.
C. Giving a balanced diet to the layers.
D. Collecting the eggs frequently.

36. Why is it necessary to reduce green vegetable material feeds and to increase grains in the diet of rabbits during the last month before marketing?

A. To fatten the rabbits.
B. To reduce the cost of feeding.
C. To improve the food intake.
D. To maintain the weight of rabbits.

37. Why is it advisable to reduce watering and to remove overhead shade gradually from a nursery one week before transplanting seedlings?

A. To allow seedlings to form the green colour.
B. To control pests in the nursery.
C. To control diseases in the nursery.
D. To make seedlings get used to the field conditions.

38. A farmer wishes to borrow a loan from the Agricultural Finance Corporation to improve his farm. Which one of the following would be required by the Agricultural Finance Corporation before the loan is processed?

A. Security offered by the farmer.
B. Records of the farmer's educational background.
C. Market for the farm produce.
D. Map showing the layout of the farm.

39. Which one of the following is an advantage of zero-grazing?

A. It requires less skill to manage.
B. There is less feed wastage.
C. It is cheap to start.
D. It requires less labour.

40. To discourage bees from abandoning a bee hive during a dry season, it is necessary to

A. shift the bee hive close to a water point
B. move the bee hive to a sheltered place
C. provide a sugar solution close to the bee hive
D. leave the bee hive undisturbed.

41. Before handling newly born rabbits, it is advisable to rub the doe's bedding materials on the hands to avoid

A. the likelihood of introducing infection to the newly born rabbits
B. the likelihood of rejection of newly born rabbits by the doe
C. disturbing and making the doe aggressive
D. interference with the growth of the newly born rabbits.

42. Which one of the following is used as the planting material by farmers in sugar cane production?

A. Cuttings.
B. Splits.
C. Suckers.
D. Seeds.

43. Why is it necessary for farmers to leave strips of unploughed land between ploughed portions during seedbed preparation?

A. To keep crop remains after harvesting.
B. To provide grass for grazing.
C. To control insect pests.
D. To control soil erosion.

44. A farmer kept 200 layers from which she collected 165 eggs one day and 155 eggs the following day. Calculate the laying percentage of the layers for the two days.

A. 37.5%
B. 50.0%
C. 60.0%
D. 80.0%

45. Which one of the following crop pests is correctly matched with the part of crop that the pests damage?

	Pests	*Part of crop*
A.	Weevils	Stem
B.	Aphids	Root
C.	Armyworms	Leaves
D.	Cutworms	Flowers

46. The following list shows records for Soy farm as at 31st December, 1993.

Cash in bank	Sh. 5,000
Loan from AFC	Sh. 45,000
Value of cattle on the farm	Sh. 78,000
Value of buildings on the farm	Sh. 210,000
Money to be paid to KGGCU	Sh. 15,000
Value of farm land	Sh. 350,000

Calculate the value of the assets of Soy farm.

A. Sh. 643,000
B. Sh. 763,000
C. Sh. 778,000
D. Sh. 823,000.

47. After finishing school Robi was given a piece of land by her father for which she acquired a title deed. She grows tomatoes and kales on the land. What kind of land ownership is this?

A. Owner operator.
B. Tenancy.
C. Landlordism.
D. Communal ownership.

48. Small scale dairy farmers in Mwambao location are finding it difficult to sell their milk, to acquire cattle feeds and to manage their cattle. Which one of the following actions is the most appropriate for the farmers to take?

A. Attend adult education classes.
B. Form a co-operative society.
C. Sell milk at the local market.
D. Buy a lorry for milk transportation.

49. Which one of the following practices would be most suitable for improving soil fertility on a flat farm land?

A. Application of manures.
B. Controlling soil erosion.
C. Application of mulch.
D. Draining away excess water.

50. Below is an illustration of a tree seedling with a structure around it.

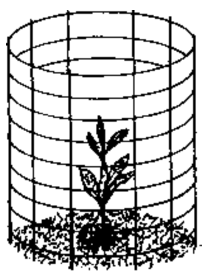

The reason for erecting such a structure around a seedling is to

A. provide shade from strong sunlight
B. make the seedling grow upright
C. protect the seedling from attack by animals
D. protect the seedling from strong wind.

51. The diagram below represents a wooden chicken feed trough.

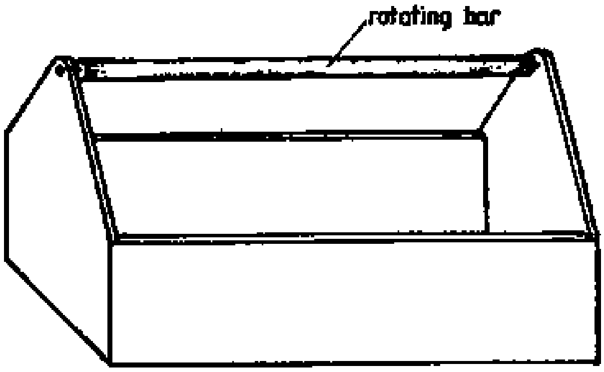

What is the use of the rotating bar?

A. To prevent chickens from competing for the feed.
B. To prevent chickens from perching on the trough.
C. To provide a resting place for chickens after feeding.
D. To divide the trough into two feeding sides.

52. Standard V pupils collected different types of soils from their home areas for experiments. One of the soil samples was found to have the following characteristics:

(i) *has very fine soil particles*
(ii) *retains more water than all the others*
(iii) *makes thinner and longer ribbons than all the others*

Which one of the following types of soils has the characteristics listed above?

A. Clay soil.
B. Loam soil.
C. Sandy soil.
D. Sandy loam.

53. Which one of the following should a calf be fed on during the first three days of its life?

A. Calf pellets.
B. Dairy meal.
C. Whole milk.
D. Colostrum.

54. 4-K Club pupils made nursery beds that were 150 cm wide. Their teacher advised them to reduce the widths to 100 cm. Why was it advisable to reduce the widths of the nursery beds?

A. To keep the cost of watering low.
B. To enable pupils to work without stepping on the beds.
C. To be able to make many nursery beds in an area.
D. To be able to produce healthy seedlings.

55. A farmer kept maize in a raised, well ventilated and properly roofed store. Later she found the maize rotting. What was the most likely cause for the rotting?

A. Damage to the maize by pests.
B. Wet weather conditions.
C. High moisture content of maize.
D. High temperature in the store.

56. In which type of record should a farmer enter the details of the quantity of farm produce sold and the amount of money obtained from the sale?

A. Production records.
B. Field operation records.
C. Inventory records.
D. Marketing records.

57. A livestock officer went to a farm to examine a sick cow. In which structure should the cow be put during examination?

A. A pen.
B. A shed.
C. A crush.
D. A hutch.

58. Which one of the following tools requires sharpening as a maintenance practice?

A. Trowel.
B. Chisel.
C. Hacksaw.
D. Fork *jembe.*

59. Which one of the following is a symptom of coccidiosis in livestock?

A. Blood stained diarrhoea.
B. Swollen lymph glands.
C. Wounds in the mouth.
D. Difficulty in breathing.

60. A local agricultural extension officer advised a farmer to include a legume crop in her crop rotation system. The main reason for including a legume is to

A. provide feed for livestock
B. improve the soil structure
C. increase nitrogen content in the soil
D. provide cover for the soil.

3.2.4. KCPE 1993/Science and Agriculture Paper

THE KENYA NATIONAL EXAMINATIONS COUNCIL

KCPE 1993

SCIENCE AND AGRICULTURE

Time: 2 hours

READ THESE INSTRUCTIONS CAREFULLY

1. You have been given this question booklet and a separate answer sheet. The question booklet contains 60 questions.

2. Do any necessary rough work in this booklet.

3. When you have chosen your answer, mark it on the **ANSWER SHEET,** not in this question booklet.

HOW TO USE THE ANSWER SHEET

4. Use only an ordinary pencil.

5. Make sure that you have written on the answer sheet:

   YOUR INDEX NUMBER
   YOUR NAME
   NAME OF YOUR SCHOOL

6. By shading the correct numbered ellipses (small oval shapes) mark your full Index Number (i.e. School Code Number and three-figure Candidate's Number) in the grid near the top of the answer sheet.

7. Do not make any marks outside the ellipses.

8. Keep the sheet as clean as possible and **DO NOT FOLD IT.**

9. For each of the questions 1-60 four answers are given. The answers are lettered A, B, C, D. In each case only **ONE** of the answers is correct. Choose the correct answer.

10. On the answer sheet, show the correct answer by shading the ellipse in which the letter chosen is written.

Example

In the **Question Booklet:**

46. Which one of the following services is provided by the Kenya Grain Growers Co-operative Union?

A. Provides employment to farmers.
B. Sells inputs to farmers.
C. Organises agricultural shows.
D. Banks money for farmers.

The correct answer is 'B'.

On the **Answer Sheet:**

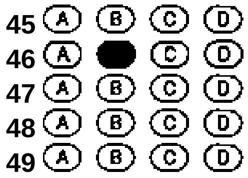

In the set of ellipses numbered 46, the ellipse with B in it is shaded.

11. Your shading MUST be within the ellipse. Make your shading as **DARK** as possible.

12. For each question, ONLY ONE ellipse is to be shaded in each set of four ellipses.

This Question Paper consists of 9 printed pages and 3 blank pages.

SCIENCE

1. The pressure exerted by a liquid depends on its

A. volume
B. mass
C. depth
D. surface area.

2. A small porous bag containing wet iron nails was fixed onto the bottom of a glass container. The glass container was then inverted over water in a basin as shown in the diagram below.

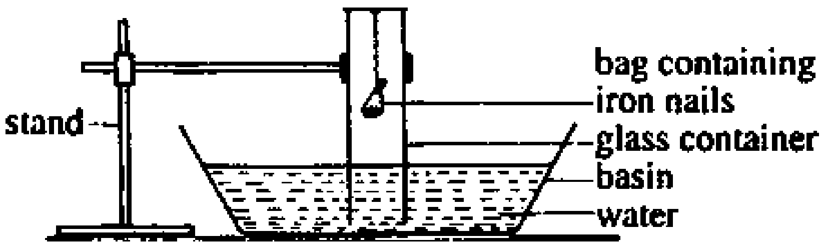

Which one of the following is most likely to happen if the set up is left for a few days?

A. Level of water in the basin will rise.
B. Level of water in the glass container will rise.
C. Weight of the iron nails will decrease.
D. Air bubbles will escape from the glass through the water.

3. The shape of a rubber sheet which was tied round the mouth of a bottle appeared as shown in diagram I. After immersing the bottle in cold water, the shape of the rubber sheet appeared as in diagram II.

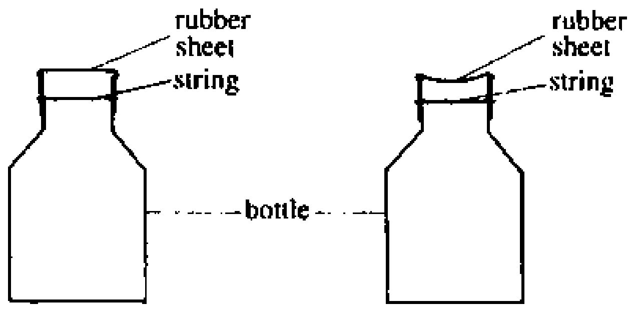

Diagram I Diagram II

The shape of the rubber sheet changed because

A. the rubber sheet absorbed air
B. air in the bottle expanded
C. air escaped through the rubber sheet
D. pressure in the bottle decreased.

4. Four groups of pupils **P**, **Q**, **R** and **S** wanted to compare rates of evaporation of different liquids. The materials set up by each group were as follows:

P Identical containers with different amounts of liquids.
Q Identical containers with equal amounts of liquids.
R Different sizes of containers with equal amounts of liquids.
S Different sizes of containers with different amounts of liquids.

Which one of the groups of pupils set up the materials **CORRECTLY**?

A. **P**
B. **Q**
C. **R**
D. **S**

5. Two mirrors were placed as shown in the diagram below.

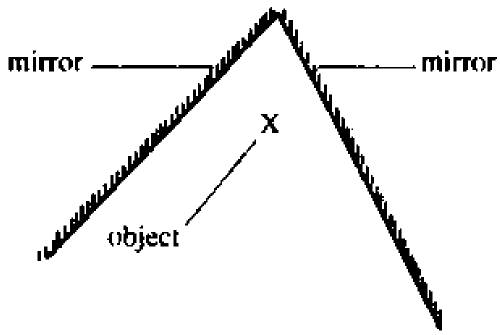

If an object is placed at point X, which one of the following would be TRUE?

A. Many images will be formed.
B. The image formed will be smaller than the object.
C. Only one image will be formed.
D. The image formed will be upside down.

6. A kerosene stove was used to boil water to produce steam for turning a model turbine. Which one of the following shows the correct order of energy changes that took place?

A. Heat chemical mechanical.
B. Chemical heat mechanical.
C. Chemical mechanical heat.
D. Heat mechanical chemical.

7. The diagram below represents a flower opened to show inner parts.

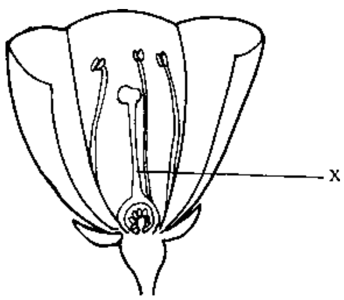

The part marked X is the

A. stamen
B. filament
C. stigma
D. style.

8. A section through a maize grain is shown in the diagram below.

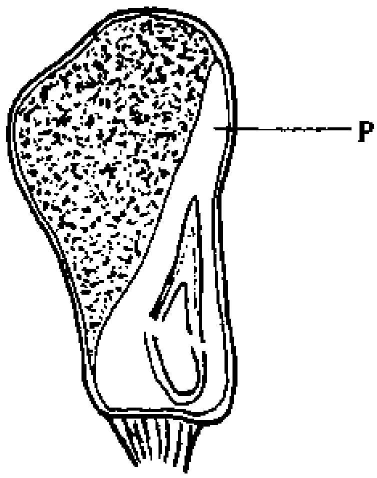

The part marked **P** is the

A. radicle
B. hilum
C. cotyledon
D. plumule.

9. Which one of the following animals is CORRECTLY MATCHED with its adaptation?

	Animal	Adaptation
A.	Hawk	Long beak.
B.	Frog	Scales.
C.	Praying mantis	Colour.
D.	Ant-bear	Teeth.

10. The chart below shows a simple classification of vertebrates.

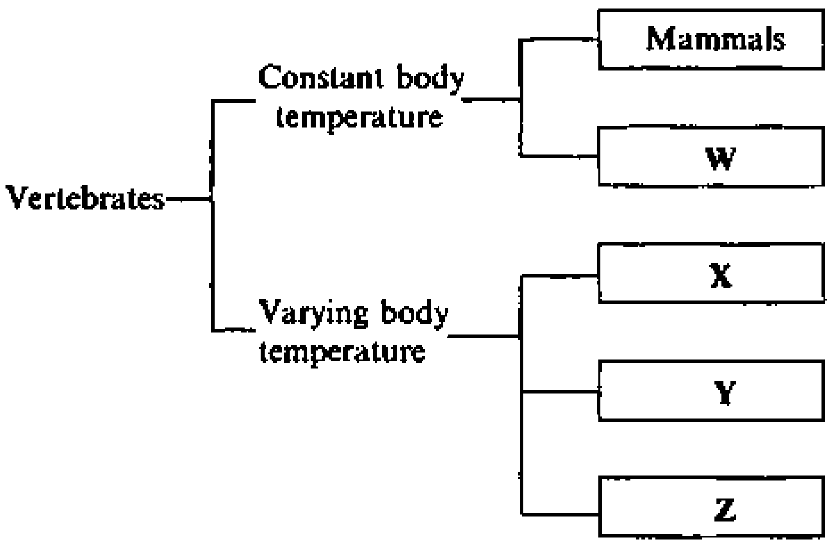

Which one of the following groups of vertebrates does **W** represent?

A. Reptiles.
B. Amphibians.
C. Fish.
D. Birds.

11. Which one of the following is a function of the pancreas? It

A. absorbs digested food.
B. produces digestive juice.
C. absorbs water.
D. stores digested food.

12. A pupil classified some animals as shown in the chart below:

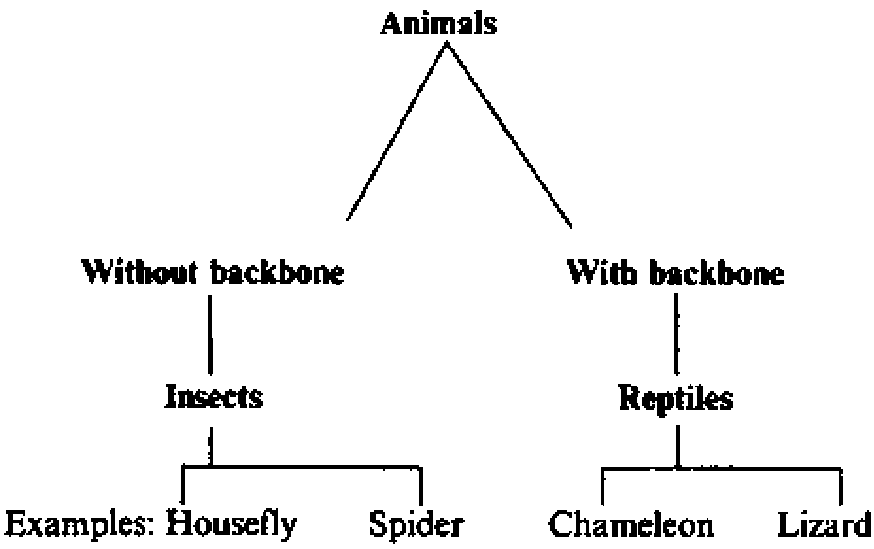

Which of the folowing animals was NOT classified correctly?

A. Housefly.
B. Spider.
C. Chameleon.
D. Lizard.

13. When the heart of a mammal contracts, blood in the left ventricle is forced out

A. through the aorta
B. through the pulmonary artery
C. through the pulmonary vein
D. into the left auricle.

14. A fruit of a certain plant is shown in the diagram below.

The fruit is mainly dispersed by

A. wind
B. animals
C. explosive mechanism
D. water.

15. Kijita dipped a ruler in water in a glass container.

Which of the following diagrams shows how the ruler appeared when viewed from the side of the glass?

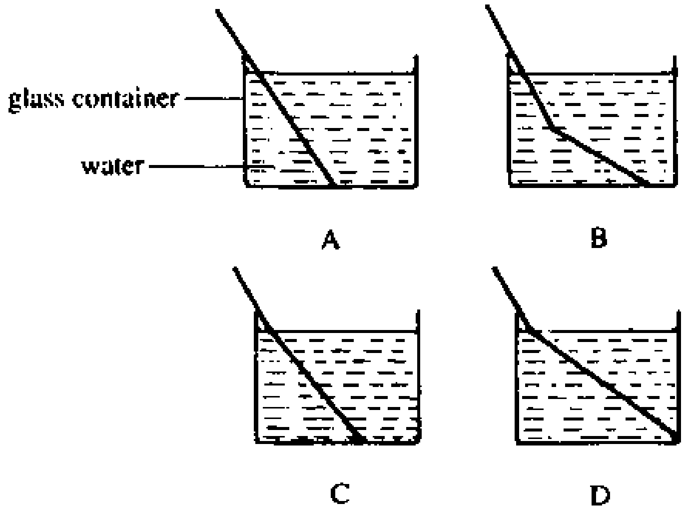

16. Which one of the following properties of soil does **NOT** depend on the size of its particles?

A. Colour.
B. Water retention.
C. Drainage.
D. Texture.

17. Equal amounts of different types of soils **J, K, L** and **M** were put into four identical glass containers. Equal volumes of water were then added to each container. After all the air had escaped from the soil in each container, the levels of water in the containers were as shown in the diagrams below.

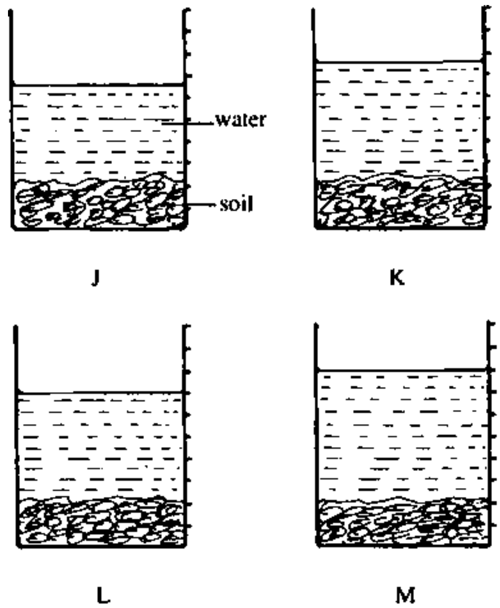

Which one of the following conclusions about the soils is correct?

A. Soil **L** had more air spaces between its particles than soil **K**.
B. Soil **M** had the most air spaces between its particles.
C. Soil **K** had less air spaces between its particles than soil **M**.
D. Soil **J** had the least air spaces between its particles.

18. The chart below shows a record of weather made by pupils in Standard Five for a week.

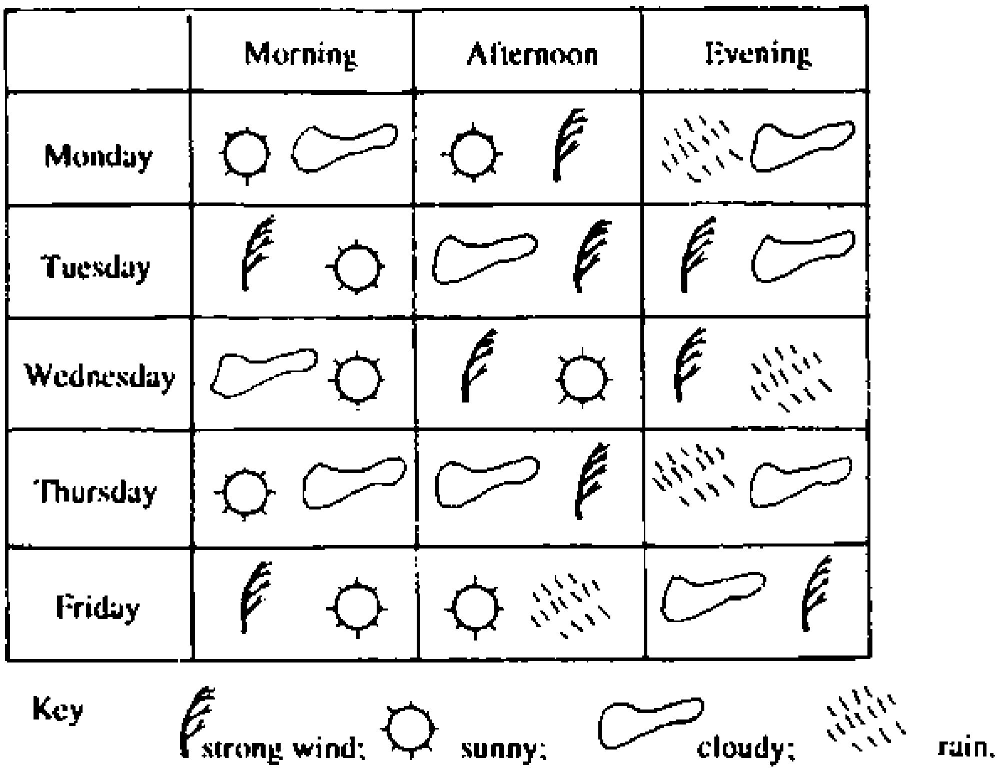

Which one of the following statements about the weather chart above is **correct**?

A. It only rained after strong winds blew earlier in the day.
B. It was cloudy in all the afternoons.
C. It was sunny everyday in the morning and windy everyday in the afternoon.
D. Strong winds blew in the mornings on more days than in the evenings.

19. As Katinda was walking from home to school early in the morning, she saw her shadow on her right hand side and the school directly ahead of her.

In which direction was the school from where she was?

A. East.
B. West.
C. North.
D. South.

20. Amina was instructed by the doctor to lake two teaspoonfuls of some medicine after every six hours for five days. She forgot the instructions and look four teaspoonfuls of the medicine at once. After realising her mistake, Amina should have

A. sought immediate advice from a doctor
B. taken the medicine only after the next twelve hours
C. drunk plenty of water to dilute the medicine
D. continued taking the medicine correctly as instructed.

21. Cirrhosis is a disease of the liver which is commonly caused by excessive

A. drinking of beer
B. smoking of tobacco
C. chewing of *miraa*
D. inhaling of cobbler's glue.

22. Movable and fixed pulley arrangements shown in the diagram below were used separately to lift a load by a distance of one metre.

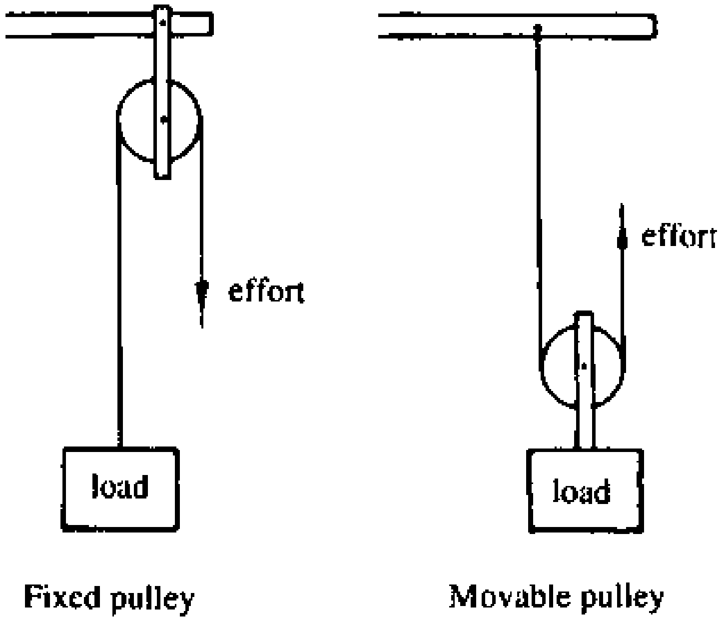

Which one of the following shows the correct distances moved by the effort in each case?

	Fixed pulley	Movable pulley
A.	1 m	1 m.
B.	2 m	1 m.
C.	1 m	2 m.
D.	2 m	2 m.

23. Which one of the following practices does **NOT** pollute the environment?

A. Spilling used oil in a forest away from homes.
B. Spraying some oil in a lake to kill mosquito lavae.
C. Dumping vegetable remains in a farm near homes.
D. Dumping factory wastes into a river that flows into the sea.

24. The chart below shows a feeding relationship in a certain habitat.

Grass $\Rightarrow$ Insects $\Rightarrow$ Lizards $\Rightarrow$ Snakes.

Note: The arrow points to the eater.

If a disease killed all the lizards, which one of the following would be the immediate effect?

	Grass	Insects	Snakes
A.	Decrease	increase	decrease.
B.	Increase	increase	decrease.
C.	Decrease	decrease	decrease.
D.	Increase	decrease	decrease.

25. The diagram below shows a loaded wheelbarrow being pushed.

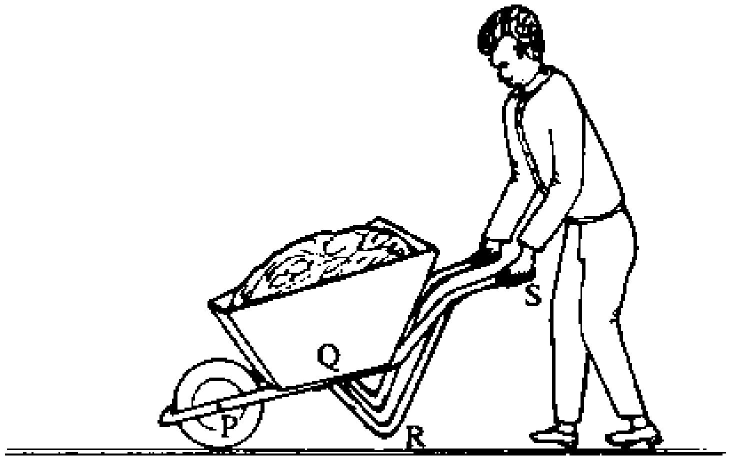

Which one of the following represents the effort distance?

A. QS.
B. PS.
C. QR.
D. PR.

26. Juma sat on the seesaw at point **P** while John sat at point **Q**. The seesaw tilted lifting John up.

Which one of the following should John do in order to balance with Juma?

A. Move nearer the fulcrum.
B. Remain at **Q** and press the seesaw downwards.
C. Move the fulcrum closer to himself.
D. Move further away from the fulcrum.

27. In which one of the following activities does a man need to reduce friction?

A. Walking downhill.
B. Writing on a piece of paper.
C. Sliding a carton of milk across a table.
D. Picking bottles from a crate.

28. A transparent plastic container was filled with water. Two small holes were then made, one on the lid and the other at the bottom. It was noticed that when both holes were open, water flowed out through the bottom hole. When the top hole was closed, the flow of water stopped. The flow of water stopped because

A. water in the container is denser than air
B. pressure in water is greatest at the bottom
C. air pressure in the container increased
D. pressure exerted by the water is equal to the air pressure at the bottom hole.

29. A little amount of water in a tin can was heated and the water allowed to boil for sometime. The tin was closed firmly and cold water poured on it. The can collapsed suddenly. This happened because

A. pressure outside the tin can increased
B. pressure inside the tin can increased
C. the contraction of tin can was sudden

D. pressure inside the tin can decreased.

30. A small piece of glass was cut off from a large shee of glass. Which one of the following properties o glass does **NOT** change after the cutting?

A. Mass.
B. Weight.
C. Volume.
D. Density.

AGRICULTURE

31. Which one of the following sheep breeds is kept for wool production?

A. Maasai.
B. Merino.
C. Blackhead Persian.
D. Dorper.

32. Which one of the following sets of characteristics apply to a dairy cow?

A. Early maturity and block shaped body.
B. Thick neck and high fertility.
C. Short legs and strong back.
D. Well developed udder and wedge shaped body.

33. Which one of the following parasites **CANNOT** be controlled by rotational grazing?

A. Ticks.
B. Tapeworms.
C. Tsetse flies.
D. Liver flukes.

34. A farmer noticed that one of his cows was eating objects such as clothes and soil.

What action should the farmer take to correct this behaviour?

A. Give the cow more feed.
B. Give the cow feed rich in proteins.
C. Separate the cow from others.
D. Give the cow mineral salts.

35. The diseases below attack the animals shown against them.

Disease	**Animals attacked**
Anthrax	cattle, sheep, goats
Foot and mouth	pigs, sheep, cattle, goats
Nagana	camels, pigs, sheep, goats, cattle
Coccidiosis	chickens, rabbits, sheep.

Which of the following animals are attacked by **all** of the above diseases?

A. Cattle.
B. Goats.
C. Sheep.
D. Pigs.

36. Which one of the following characteristics can be used to identify a hen that has stopped laying when culling poultry?

A. Bright and alert eyes.
B. Large and warm comb.
C. Large and moist vent.
D. Dry comb and hard abdomen.

37. The reason for smearing grease on wires that suspend Kenya Top-bar hive is to prevent

A. ants from reaching the hive
B. the wire from rusting
C. rats from reaching the hive
D. birds from resting on the wire.

38. A farmer built a house for his chickens to stay in at night and provided watering points for the chickens in the farm.

What system of poultry rearing was the farmer practising?

A. Free range.
B. Deep litter.
C. Battery cage.
D. Fold.

39. Which one of the following statements describes the term **mixed farming?**

A. Growing cereal and leguminous crops together.
B. Rearing livestock and growing crops on the same farm.
C. Rearing livestock and keeping poultry on the same farm.
D. Growing vegetables and cash crops together.

40. How do plants help to control soil erosion?

A. By their leaves preventing rain water from reaching the ground.
B. By their roots holding the soil particles together firmly.
C. By their leaves preventing sun's heat from reaching the soil.
D. By preventing moving water from passing between them.

41. What is the purpose of constructing a shade over seedlings in a nursery bed?

A. To conserve soil moisture.
B. To make seedlings grow taller.
C. To improve soil fertility.
D. To prevent rain water from reaching the seedlings.

42. The sketch map given below represents a school farm.

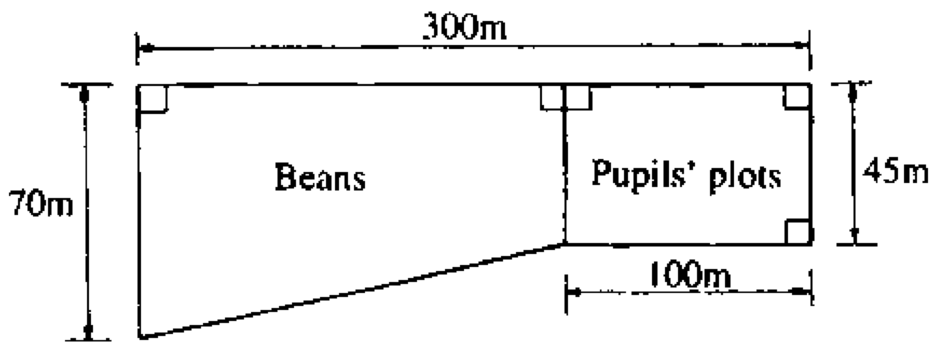

Calculate the area of the plot planted with beans in hectares.

A. 1.15 ha.

B. 1.35 ha.
C. 1.40 ha.
D. 2.10 ha.

43. A farmer noticed that his maize at flowering stage had holes on the leaves and stems.

Which one of the following pests is likely to have caused the damage?

A. Aphids.
B. Armyworms.
C. Weevils.
D. Stalkborers.

44. Which one of the following is an oil crop?

A. Pawpaw.
B. Peas.
C. Sun-flower.
D. Wheat.

45. Tomato plants are staked in order to

A. allow for easy pruning.
B. keep the fruits off the ground.
C. allow uniform ripening of fruits.
D. prevent the fruits from being damaged by insects.

46. Which one of the following entries should **NOT** be entered under Input records?

A. Foods given to poultry.
B. Fertilizers used for planting.
C. Eggs sold to the market.
D. Pesticides applied to crops.

47. Mrs. Juma kept the following information in the records for her dairy cattle:

Dates when cows are served
Dates when cows are due to calve down
Sexes of calves born
Breeds of bulls used for service

In which one of the activities below would the above information be most useful to Mrs. Juma in managing her farm?

A. Marketing her dairy products.
B. Selecting suitable animals for breeding.
C. Detecting the health of her livestock.
D. Buying the required materials for her livestock.

48. The price of groundnuts at Mur Malanga market on one Tuesday was Shs. 65.00 per kg before mid-day, and Shs. 85.00 per kg after mid-day.

What is likely to have caused the increase in price?

A. Less quantity of groundnuts supplied in the morning and few buyers present.
B. Large quantity of groundnuts supplied in the afternoon and few buyers present.
C. Less quantity of groundnuts supplied in the afternoon and many buyers present.
D. Large quantity of groundnuts supplied in the morning and few buyers present.

49. In the month of June 1992, a farmer kept the following records:

1st June sold eggs for Shs. 900.00
4th June bought layers mash for Shs. 1,080.00
8th June sold carrots for Shs. 1,000.00
16th June sold cabbages for Shs. 2,400.00
20th June bought fertilizers for Shs. 1,000.00
30th June bought fungicides for Shs. 300.00

What profit or loss did the farmer make during the month of June 1992?

A. A profit of Shs. 1920.00.
B. A loss of Shs. 2380.00.
C. A profit of Shs. 4300.00.
D. A loss of Shs. 6680.00.

50. Which one of the following organisations provides loans for farming?

A. 4-K Clubs.
B. Agricultural Society of Kenya.
C. Young Farmers Clubs.
D. Agricultural Finance Corporation.

51. In which one of the following land tenure systems does a farmer have full right to the use of land?

A. Tenancy.
B. Communal ownership.
C. Individual owner operator.
D. Co-operative.

52. Which one of the sets of tools and equipment listed below is the most appropriate to use when constructing a wooden chicken feed trough?

A. Handsaw, claw hammer, try square and tape measure.
B. Spirit level, try square, tape measure, and handsaw.
C. Ball pein hammer, *panga*, try square and spirit level.
D. Try square, *panga,* tape measure and handsaw.

53. Which one of the following tools is most suitable for preparing a seedbed from a hard piece of ground that has couch grass?

A. Garden fork.
B. *Jembe.*
C. Mattock.
D. Fork *jembe.*

54. What maintenance practices should be carried out on garden tools to prevent rusting during long storage?

A. Clean, dry and apply oil on tools before storage.
B. Clean, dry and sharpen tools before storage.
C. Wash the tools and replace worn out parts.
D. Wash the tools and repair broken parts.

55. Which one of the places described below is suitable for siting a bee hive?

A. An open place near flowering plants.
B. A place far from a grazing field and far from a water source for bees.

C. A sheltered place close to a water source for bees.
D. A sheltered place close to a homestead.

56. Matera Primary School pupils have observed for a number of years that their maize crops get damaged by being blown down by strong winds.

What action should they take to control the problem in future?

A. Apply more fertilizers to their maize crops.
B. Grow a short maize variety.
C. Intercrop maize with beans.
D. Plant trees around their maize plot.

57. Which one of the following sets of practices contains safety measures which should be "observed when applying insecticides?

A. Wearing protective clothing and using insecticides of correct concentration.
B. Using the right type of insecticide and spraying against the direction of wind.
C. Wearing protective clothing and using highly concentrated insecticides.
D. Pouring the remaining insecticides on the grass and cleaning the equipment after use.

58. Below is an illustration of a sheep. Which one of the parts labelled is usually docked?

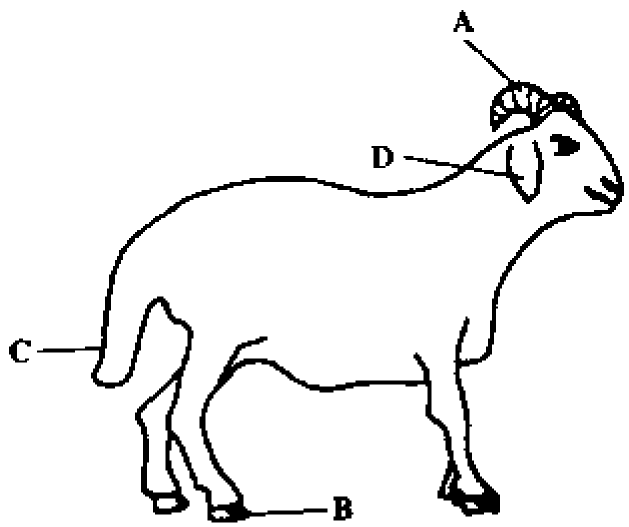

59. Which one of the following planting materials is used to establish a crop of bananas?

A. Tubers.
B. Suckers.
C. Bulbils.
D. Cuttings.

60. Why should compost materials be turned three to four limes during the preparation of compost manure?

A. To reduce the smell of compost materials.
B. To encourage uniform rotting of compost materials.
C. To allow fast water penetration in the compost heap.
D. To check if the compost heap is ready for use.

3.3. Lesotho

3.3.1. Overview

End of Primary School Examination

1. Title of examination:	Primary School Leaving Examination
2. Amount of fees charged:	≈ US$2
3. Examination after years in primary school (6, 7, 8 years):	7 yrs
4. Children's entry age in primary school:	6 yrs
5. Number of pupils sitting examination in 1994:	31,396
6. Examination subjects offered:	8 subjects in 5 papers: • Mathematics • English • Sesotho • Social Studies • Science (Science, Home Economics, Agriculture, Health Education)
7. Language of examination:	English (except for Sesotho paper)
8. Institution setting the examination questions:	N.C.D.C. (National Curriculum Development Centre) and Primary Examination Office for printing
9. Have there been any reforms in the examination questions?	No, but syllabi for primary schools were revised 1994 and are on trial in selected schools countrywide.
10. Stages of development of examination questions (please describe):	• Item writing workshop for Primary School Leaving Examination by selected teachers with the assistance of subject specialists from National Curriculum Development Centre. The workshop is conducted by the Examination Office with the assistance of the Office of Evaluation, Research and Testing. • Editing and proofreading of developed items by Evaluation, Research and Testing Division. Final proofreading by subject specialists. • Banking of good items by Evaluation, Research and Testing Division. • Two papers per subject produced by Evaluation, Research and Testing Division and printing of papers by Examination Office. • Pre-testing on selected sample by the Inspectorate. • Scoring of answer sheets on computer and item analysis coordinated by the Inspectorate.

11. Type of examination questions and distribution of different kind of questions.	Multiple-choice in English, Sesotho, Science, Mathematics and Social Studies; mainly recall questions; essay writing: English and Sesotho.
12. Is continuous assessment incorporated in the final examination?	Yes [ ] No [x]
13. Are examination items pretested?	Yes [x] No [ ]
14. Which professional groups are involved in setting the examination questions?	• Primary school teachers • School inspectors • Primary Examination officers • Curriculum developers
15. Are the same professionals who set the examination questions involved in marking papers?	Yes [ ] No [x]
If no, who marks the papers (state)?	District Education Offices select teachers for marking of English and Sesotho essays and letters.
16. How are examination results used for improving teaching in primary schools?	The District offices, National Curriculum Development Centre and Examination office produce a report which is sent to schools, curriculum developers and Ministry of Education for the purpose of improving teaching in primary schools. Examination results are used together with the report by the three bodies mentioned above. Evaluation, Research and Testing Division conducts an analysis of items used by NCDC to improve items, and teachers to improve teaching.
17. To what other uses are the examination results put?	The examination results are also used for selection into secondary schools.
18. Main problem with Primary School Leaving Examinations?	• Distribution of examination papers is difficult because some places are not easy to reach. • Security of papers is not guaranteed. • Production of scanner sheets.

3.3.2. Item Writing for Primary School Leaving Examination in Lesotho

National Curriculum Development Centre (N.C.D.C.)

Introduction

During last week of October the Primary School Leaving Examination (PSLE) is administered countrywide. The time table which has been given to the head-teachers is followed to the letter. Five subjects are tested, namely: English, Sesotho, Mathematics, Science and Social Studies. These subjects are normally scheduled to be administered in four days. The language subjects Sesotho and English have three papers each. The first paper requires a composition on one of the two given topics. The second paper deals with composing a letter, and the third paper contains multiple-choice questions on comprehension and usage of the language. The other three subjects test the candidates by applying multiple-choice items.

In 1993 about 31,887 students enrolled for PSLE but the actual number of students who sat for PSLE were 31,979 of which 8,725 got the first division (1st class), 8,644 got the second class and 11,665 got third class. Only 1,742 students failed, while the total number of passes was 29,034 (90.8% of candidates who sat for PSLE).

The Development of the Item Bank

In 1987 it was decided that an item bank should be built up for the PSLE. The banked items would be pre-tested and statistically analysed. The Evaluation and Testing (E&T) Division of the National Curriculum Development Centre (NCDC) was then assigned the task of developing and building up the bank.

Step 1

The E&T Division consults with different subject divisions which in turn nominate a number of teachers (normally five per subject area) to attend the item writing workshop. It was felt that the contribution made by teachers towards this exercise would be more appropriate.

The criteria used are as follows:

(a) Subject panel members: This criteria has the disadvantage of not giving many different teachers a chance to gain an idea of proper item writing.

(b) Resource teachers: The aim here is that when the teachers get back to their respective regions they will share whatever knowledge they have gained on good item writing with their colleagues.

(c) Teachers from different localities throughout the country: The idea is the same as above; teachers would spread the message to teachers in their schools and neighbouring schools on how to write good items.

The subject divisions are encouraged to mix their nominees; e.g. out of five people, at most two teachers should already have attended the workshop while the other three teachers should be new to the exercise. The aim is that the experienced teachers give a lead to the inexperienced teachers.

Step 2

The item writing workshop normally runs for five days. On the first day and the first half of the second day teachers are introduced to the item writing circle as well as given tips on how to write good items. They are also given examples of items which are considered to be good or to be poor.

Teachers start writing items from the second half of the second day up to the fourth day. On the fifth day, teachers are normally given a chance to go through their work to convince themselves that they have produced what is required. From the very first day of the workshop, the representatives of the subject divisions work with the E&T group to guide teachers. Since teachers work in different groups according to the subjects they write items for, each representative of subject divisions works with his/her subject group.

Step 3

The following step after the item writing workshop is that of editing the items written by teachers. This exercise is done by the E&T group. Immediately after editing, the test papers are compiled using the edited items. When the papers are ready, the E&T Division passes them over to the respective subject divisions where the items are edited further. After the second editing the E&T Division produces final test papers ready for printing.

For each subject, two test papers are produced (papers A and B). The purpose of having two papers is to increase the chances of having many good items during pretesting (those items that show good statistical characteristics when analyzed).

Step 4

The test papers are taken for printing at this stage. The printing is done by the Instructional Materials Resource Centre (I.M.R.C.) unit, which also falls under the Ministry of Education (MOE).

During the printing of the test papers the E&T Division together with the Primary Examinations Office (PEO) selects a sample of schools in which pre-testing will take place.

The criteria for selecting schools takes a number of factors into consideration:

- The size of the district (the number of schools per district).

  The locality of the school within the district (e.g. rural, urban, foothills or mountains).

- Denomination of the proprietor (more than 95% of the primary schools in the country belong to churches).

- The performance of the school at PSLE level (e.g. very high, average or very low).

The schools are then warned a month in advance about the pretest visits.

Step 5

At this stage the E&T group together with the PEO administers the pre-test exercise. This exercise takes a full month (4 weeks), and it is done in September, when pupils are just ready to sit for their PSLE. Each test paper must be taken by at least 200 pupils. The tests taken at each school are chosen at random. One school takes two sittings. That is, either two or four different tests per school, depending on the size of the school.

Step 6

The pre-testing involves only the objective type of tests. Thus, the computer answer cards are used and scored by computers. The scoring is done by the Education Statistics Unit of the MOE.

The scoring computer has been fed with a programme which has been derived from the Kuder-Richardson Formula 20 (KR20) formula, which allows it to produce item analysis immediately after scoring the cards.

Step 7

The item analysis comes out in such a way that the E&T Division can easily decide whether an item should be banked, revised or trashed altogether. The items that are banked are those which show good statistical characteristics, and these are the items that would be put in the PSLE papers.

Step 8

When the PSLE papers have to be produced the E&T Division consults with each subject division to decide on the items that should be included in the papers. For this exercise the subject divisions are encouraged to use a table of specification (test blueprint) so that they can avoid bias.

When the items have been decided upon by the subject divisions, the E&T Division compiles the test papers, which in turn are proofread by the respective subject divisions. The camera-ready copies are then produced by the E&T Division and handed over to the PEO. It is the responsibility of the Primary Education Office to see that the test papers are printed, parcelled and sent to schools under very tight security. The PEO gets full help from the District Education Offices in order to perform these duties.

Step 9

The administration of the examinations is done by invigilators, who also have to send the candidates' papers to the relevant centres. The invigilators normally are teachers of class 6 and they should neither be headteachers nor should they be class 7 teachers as well. This is simply because these two categories of teachers have to be there when the examinations are being administered in their schools. The selection procedure takes place each year in September and at that very same time the test booklets are sent to schools; their safety is left with the head of the school. The invigilators are given a one-day training on how to conduct the PSLE and are also given each a PSLE administrators manual.

Step 10

After the PSLE results have been processed the item analysis of the objective tests is produced and sent to the E&T Division which decides on which items should be banked, revised or discarded.

Step 11

The District Education Offices are required to send comments to the E&T Division after marking the essays and letters. The required comments should have been made by markers, and they should be on points which they feel teachers should lay more emphasis on when teaching. The subject divisions also comment on problems concerning classroom teaching. They perform this exercise with the help of the E&T Division, on the basis of item analysis produced from the test papers. The E&T Division then produces a report based on all those comments and sends it to the schools.

Subjective Tests

Most of the steps outlined above prepare the objective tests candidates take. The subjective tests, that is, essays and letters for the languages, are not pre-tested. However, the topics are recommended by the teachers during the item writing workshop. The respective subject divisions are consulted by the E&T Division for them to decide on the topics which should be included in the PSLE papers.

Conclusion

PSLE is the only instrument on which to test and measure the ability and the extent of instruction at primary level. It is the only means that assesses countrywide the amount of skills, knowledge, and attitudes acquired in seven years of the learners' exposure to classroom instruction. It is still a way of selecting students who should proceed with higher education (post primary education).

However the Evaluation Research and Testing Division of the National Curriculum Development Centre presently explores a different way of assessment, whereby at the end of classes 3 and 6 students' achievements in Maths, English and Sesotho will be checked. The time and exposure given to the item writing during the workshops with teachers is too short. It is possible that some teachers write poor items because they may not have grasped some of the concepts. There has never been a chance to make a follow-up on teachers to ensure that they do share whatever they have gained with their colleagues.

3.3.3. Primary School Leaving Examination, Standard 7, 1994/Science Paper

KINGDOM OF LESOTHO
MINISTRY OF EDUCATION
PRIMARY SCHOOL LEAVING EXAMINATION
STANDARD 7
OCTOBER 1994
SCIENCE

(Time: 1 hour 30 minutes) (Marks: 70)

GENERAL INSTRUCTIONS

1. **Use only PENCIL on your answer sheet.**

2. When you have chosen the answer to a question, shade in the letter space **COMPLETELY** for that answer on the answer sheet.

Example: 

3. If you wish to change any answer you have chosen, use a rubber to rub out the **mark COMPLETELY** and then make a new mark. If you do not rub out completely the machine may mark the answer wrong.

4. Examples have been given to help you. Read them carefully before you start doing the questions.

SAMPLE QUESTIONS

I. Food should always be covered to keep away ________________.

A) smell
B) flies
C) people
D) rats

The correct answer is "B". You would shade in the space for B on your answer sheet.

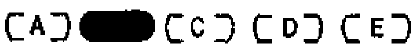

II. Milk is a ___________.

A) crystal
B) solid
C) liquid
D) gas

The correct answer is "C". You would shade in the space for C on your answer **sheet.**

1. Which sense does Mpho use to tell that there is some nicely cooked food?

A) sight
B) touch
C) hearing
D) smell

2. Which sense is used to tell that water is cold or hot?

A) Touch
B) Smell
C) Taste
D) Hearing

3. Where does the moon get its light from?

A) Earth
B) Itself
C) Sun
D) Star

4. What can be done to the plough wheels that make a lot of noise?

A) wash the wheels
B) oil the wheels
C) spray the wheels with water
D) punch the wheels

5. Which of the following substances dissolves in water?

A) sand
B) sugar
C) wheat-meal
D) maize meal

6. Which of the following will help in pollinating roses?

A) Sheep
B) Birds
C) Bees
D) Man

7. Which one of the following animals is covered with scale?

A) Horse
B) Cow
C) Hen
D) Tortoise

8. How does a fish move? It _____.

A) swims
B) climbs
C) hops
D) runs

9. Fish uses __________ for breathing.

A) gills
B) stomata
C) lungs
D) pores

10. __________ soil has big particles.

A) clay
B) sand

C) loam
D) aluvial

11. What kind of soil holds water for a long time?

A) loam
B) sand
C) clay
D) gravel

12. Which of the following flowers is a maize flower?

A) d
B) a
C) c
D) b

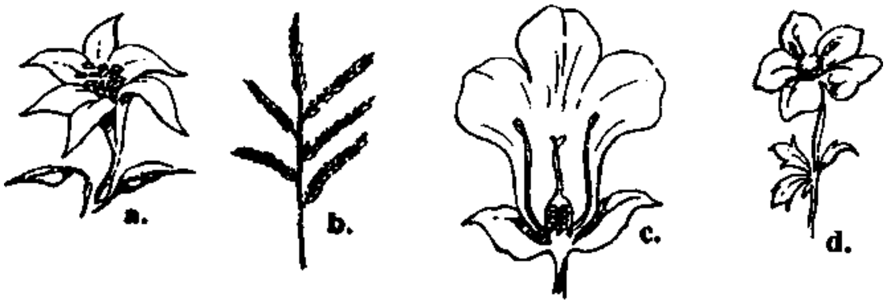

13. Which one of the diagrams below will reflect the rays of the sun when directed to it?

A) b
B) a
C) c
D) d

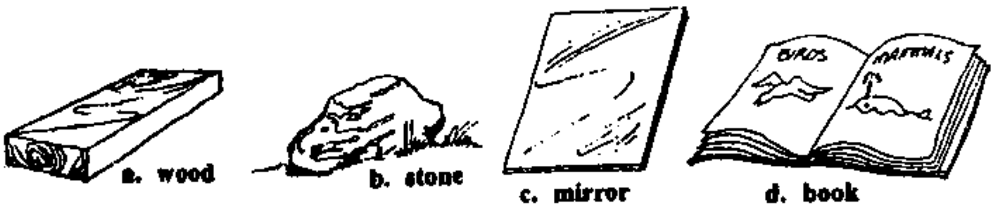

14. See the picture below. What will help the milk go out of the container?

A) Air pressure
B) Tea
C) Cup
D) Jar

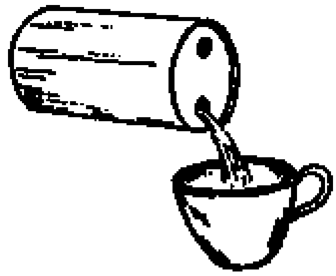

15. What happens to the wax when a candle burns? It _________.

A) expands
B) becomes black
C) becomes yellow
D) melts

16. In the diagram below what will happen to the magnets? They will _______ each other.

A) repel
B) attract
C) miss
D) change

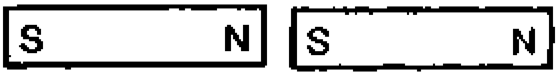

17. Tau rubs a ruler on his head and after some few seconds the ruler was able to attract pieces of papers. This shows that a ruler becomes a ________.

A) magnet
B) permanent magnet
C) radiator
D) temporary magnet

18. How does a scorpion respond when being touched?

A) runs away
B) raises its sting
C) fights
D) stays still

19. Which part do plants use for breathing?

A) stem
B) flowers
C) leaves
D) roots

20. Which machine can you use to cut through a large piece of wood?

A) Axe
B) Knife
C) Nail
D) Hoe

21. How did Mphatlalatsane derive its name? It appears _________.

A) in the middle of the day
B) before sun set
C) before sun rise
D) after sun set

22. Which one of the following shows a complete life cycle of a grasshopper?

A) pupa, egg, adult and larva
B) adult, larva, egg and pupa
C) larva, pupa, adult and egg
D) egg, larva, pupa and adult

23. Which one of the following animals lives partly in water and on land?

A) frog
B) rat
C) hare
D) cat

24. Which of these is a wild animal?

A) Cat
B) Hare
C) Lamb
D) Cow

25. __________floats in water.

A) Pumpkin
B) Stone
C) Egg
D) Feather

26. What can you use to find the perimeter of the leaf?

A) a ruler
B) a string
C) a tape measure
D) foot steps

27. A bean pod disperses by _____________.

A) itself
B) wind
C) animals
D) water

28. Which of the following lists has a list of living things only?

A) paper, plastic, rose
B) horse, stone, soil
C) man, cat, carrot
D) house, bag, boy

29. When bicarbonate of soda is mixed with vinegar it will ________.

A) melt
B) make bubbles
C) change colour
D) evaporates

30. Which agent will help in breaking down rocks into small particles?

A) paper
B) road
C) water
D) insects

31. Tseli is ill and she goes to the clinic to see the doctor. The doctor uses ________ thermometer to measure her body temparature.

A) clinical

B) mercury
C) alcohol
D) scale

32. Which is a non-living object?

A) cat
B) tree
C) boy
D) stone

33. One has to wear dark clothes in Winter because they ________.

A) reflect light
B) absorb heat
C) are beautiful
D) lose heat

34. A flame needs _________ in order to keep burning.

A) carbon
B) water vapour
C) nitrogen
D) oxygen

35. The wearing away of soil by wind and water is called ______.

A) convection
B) conservation
C) erosion
D) migration

36. Which animal sleeps in winter?

A) snake
B) rabbit
C) rat
D) dog

37. The chameleon takes the colour of the place where it lives in order to _______.

A) move quickly
B) smell its food
C) protect itself
D) see other animals properly

38. The part of the leaf marked 2 is called the __________.

A) vein
B) edge
C) midrib
D) stalk

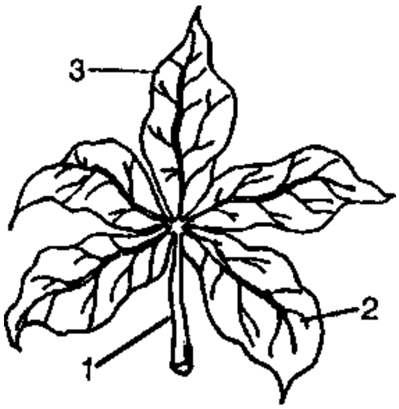

39. Sand cannot dissolve in water. It is said to be _________ in water.

A) inseparable
B) insoluble
C) soluble
D) insolvent

40. A clinical thermometer is an instrument used for measuring body_____________

A) the time of day
B) air pressure
C) rainfall
D) temperature

41. We can prevent soil erosion on sloping ground by _________ the slope.

A) ploughing furrows across
B) frequently grazing animals on
C) ploughing up and down
D) burning vegetation on

42. Water and wind easily carry away top soil when the ground is ________________.

A) warm and fertilized
B) stony and wet
C) planted with trees
D) bare and dry

43. Soil erosion can be most effectively reduced on sloping fields by __________.

A) a drainage system
B) contour ploughing
C) bustard trenching
D) shift cultivation

44. Which one of the following practices is a means of preventing soil erosion?

A) Ploughing up and down the slope
B) Winter ploughing
C) Planting grass and trees
D) Cutting grass

45. A field crop which contains oil is _________.

A) sorghum
B) maize
C) sunflower
D) wheat

46. Most of my wheat crops did not form grain but produced powder of _________ effects.

A) pneumonia
B) rust
C) blight
D) mildew

47. Plants get their minerals from the ___________.

A) gravel
B) air

C) clouds
D) soil

48. Lesotho is advised to construct __________ for irrigating fields during drought.

A) dams
B) boreholes
C) tanks
D) reserviors

49. After washing garden tools one must apply ________ on them to prevent rust.

A) grease
B) vaseline
C) fat
D) dripping

50. Field crop which grow well in the highlands of Lesotho are __________.

A) sorghum and sunflower
B) maize and letils
C) wheat and peas
D) barley and beans

51. We can keep our bodies fit and strong by ___________.

A) keeping our bodies clean
B) drinking a lot of water
C) eating a lot of fatty foods
D) Exercising regularly

52. Teboho does not eat carrots. Which disease is he likely to suffer from?

A) Bleeding gums
B) Poor eye sight
C) Weak blood cells
D) Poor growth of bones

53. Drugs and alcohol are dangerous to our bodies because they ___________.

A) affect our brains and minds
B) destroy our muscles
C) cause breathing problems
D) weaken our bones

54. A prepared mixture of sugar, salt and water can be used for treating a child suffering from ___________.

A) whooping cough
B) sore throat
C) diarrhoea
D) Toothache

55. Daily exercises helps you to be ___________.

A) injured
B) healthy
C) tired
D) sleepy

56. We wash hands before eating to prevent spread of __________.

A) fleas
B) flies
C) lice
D) germs

57. Before crossing the road, one must look __________.

A) tright and down
B) up and down
C) right and left
D) left and up

58. If a child has headache, give him/her _______ to stop pain.

A) sweets
B) cool-drink
C) jam
D) paracetamol

59. Loss of ________ is example of physical disability.

A) limb
B) hearing
C) vision
D) memory

60. Cleaning of ears with a matchstick may damage the ear _______.

A) drum
B) bone
C) tube
D) flap

61. Which one of these vegetables is in the same food group as meat?

A) tomatoes
B) potatoes
C) cabbage
D) beans

62. Meat and other foods decay quickly in the __________.

A) winter
B) spring
C) summer
D) autumn

63. _________ brush should be used to clean a plain wooden floor.

A) Shoe
B) Scrubbing
C) Hair
D) Clothes

64. To find out the length of the material one of these is used.

A) Tape measure
B) Scissors

C) Thimble
D) Cord

65. Mention one article that can be made of wool.

A) blouse
B) jersey
C) stockings
D) shirt

66. Paint stains are removed with ____________.

A) paraffin
B) solution of salt
C) sour milk
D) vinegar

67. Which is the balanced meal among these?

A) potatoes, samp, tea
B) potatoes, meat, samp
C) soft porridge, tea, meat
D) meat, vegetable salad, rice

68. Why do you use soap when washing clothes? To remove ___________.

A) lice
B) colour of a cloth
C) dirt properly
D) bugs

69. When we clean leather shoes we need __________.

A) rags and oil
B) polish and brushes
C) polish and rags
D) oil and brushes

70. Which stain is removed by soaking a cloth in cold water with a little salt added?

A) grease
B) ink
C) milk
D) blood

3.3.4. Primary School Leaving Examination, Standard 7, 1993/Science Paper

KINGDOM OF LESOTHO
MINISTRY OF EDUCATION
PRIMARY SCHOOL LEAVING EXAMINATION
STANDARD 7
OCTOBER 1993
SCIENCE

(Time: 1 hour 30 minutes) (Marks: 70)

GENERAL INSTRUCTIONS

1. **Use only PENCIL on your answer card.**

2. When you have chosen the answer to a question, shade in the letter space **COMPLETELY** for that answer on the answer card.

Example: 

3. If you wish to change any answer you have chosen, use a rubber to rub out the mark **COMPLETELY** and then make a new mark. If you do not rub out completely the machine may mark the answer wrong.

4. Examples have been given to help you. Read them carefully before you start doing the questions.

SAMPLE QUESTIONS

I. Food should always be covered to keep away ________________.

A) smell
B) flies
C) people
D) rats

The correct answer is "B". You would shade in the space for B on your answer card.

II. Milk is a___________.

A) crystal
B) solid
C) liquid
D) gas

The correct answer is "C". You would shade in the space for C on your answer card.

1. On very cold winter mornings Thabang cannot get water from a well or a tap because the water has changed to __________.

A) snow
B) dew
C) frost
D) ice

2. You can make your wheelbarrow move easier by ___________ it.

A) oiling
B) carrying
C) watering
D) filling

3. Lineo's mother uses a cloth to hold a hot saucepan. The cloth is a __________ conductor of heat.

A) cold
B) bad
C) good
D) hot

4. The yellow dust that insects carry from plant to plant is called _________.

A) stamen
B) sepal
C) pollen
D) pistil

5. A flame needs _________ in order to keep burning.

A) oxygen
B) water vapour
C) nitrogen
D) carbon

6. The wearing away of soil by wind and water is called ______.

A) migration
B) conservation
C) convection
D) erosion

7. A/An _________ makes it easier to get a heavy barrel onto a table.

A) wedge
B) lever
C) inclined plane
D) pulley

8. Hot plates on stoves are made of metal because metal ______.

A) is a bad conductor of heat
B) is a good conductor of heat
C) will stay cool
D) will burn easily

9. Which animal sleeps in winter?

A) dog
B) rabbit
C) rat
D) snake

10. The chameleon takes the colour of the place where it lives in order to _______.

A) protect itself
B) smell its food
C) move quickly
D) see other animals properly

11. Air is a mixture of _________________________.

A) salts
B) water
C) gases
D) liquids

12. The part of the leaf marked 2 is called the _______________.

A) edge
B) vein
C) midrib
D) stalk

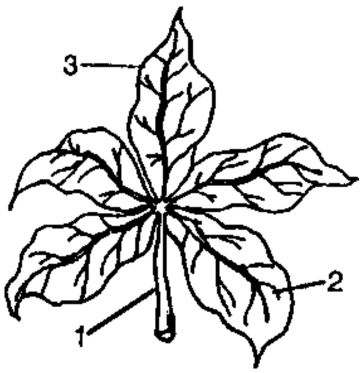

13. Sand cannot dissolve in water. It is said to be _________________ in water.

A) insolvent
B) inseparable
C) soluble
D) insoluble

14. A clinical thermometer is an instrument used for measuring ________________.

A) air pressure
B) body temperature
C) rainfall
D) the time of day

15. The path of electricity is called a ___________.

A) switch
B) cell
C) circuit
D) terminal

16. Which of the following is an electric appliance?

A) Torch
B) Rain gauge
C) Barometer
D) Thermometer

17. Light travels in ____________ lines.

A) dotted
B) straight
C) curved
D) broken

18. When a magnet is freely suspended it will always face __________.

A) East-South
B) South-East
C) West-North
D) North-South

19. Drops of water seen on leaves of plants in the morning are called _________.

A) rain
B) mist
C) dew
D) snow

20. Which sense does Mpho use to tell that there is some nicely cooked food?

A) smell
B) touch
C) hearing
D) sight

21. Which sense is used to tell that water is cold or hot?

A) Touch
B) Smell
C) Taste
D) Hearing

22. Where does the moon get its light from?

A) Earth
B) Itself
C) Sun
D) Star

23. What can be done to the plough wheels that make a lot of noise?

A) punch the wheels
B) wash the wheels
C) spray the wheels with water
D) oil the wheels

24. Which of the following substances dissolves in water?

A) sand
B) sugar
C) wheat-meal
D) maize meal

25. Which of the following will help in pollinating roses?

A) Bees
B) Birds

C) Sheep
D) Man

26. Which of these soils is good for smearing (ho lila) when mixed with cow dung?

A) Sand
B) Loam
C) Clay
D) Glavel

27. What do we call animals with backbone?

A) Reptiles
B) Invertebrates
C) Mammals
D) Vertebrates

28. Which one of the following animals is covered with scale?

A) Hen
B) Cow
C) Tortoise
D) Horse

29. How does a fish move? It _____.

A) climbs
B) swims
C) hops
D) runs

30. How does a scorpion respond when being touched?

A) raises its sting
B) runs away
C) fights
D) stays still

31. __________ soil has big particles.

A) loam
B) clay
C) sand
D) alluvial

32. What will happen to a paper clip when put next to a magnet? It will be ___________ a magnet.

A) bend by
B) repelled from
C) stretched by
D) attracted to

33. Which one of the diagrams below will reflect the rays of the sun when directed to it?

A) 1
B) 3
C) 2
D) 4

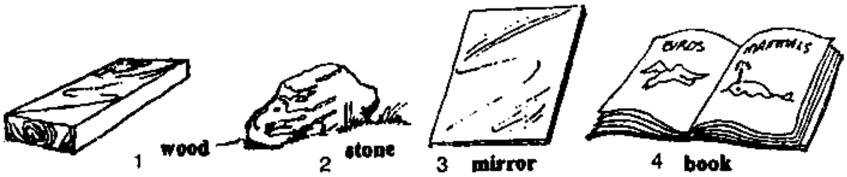

34. Which of the following flowers is a maize flower?

A) 3
B) 1
C) 2
D) 4

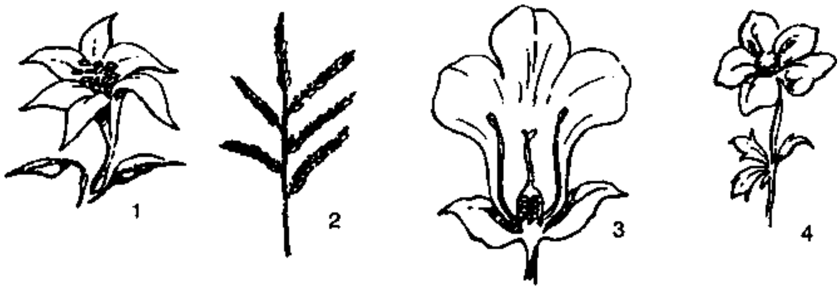

35. What kind of soil holds water for a long time?

A) gravel
B) sand
C) loam
D) clay

36. See the picture below. What will help the milk go out of the container?

A) Air pressure
B) Tea
C) Cup
D) Jar

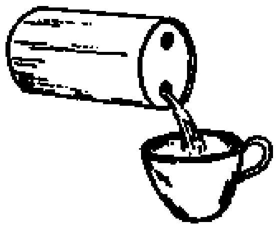

37. Maize in the diagrams below was grown at the same time on different types of soil. On what type of soil was maize '1' grown?

A) gravel
B) clay
C) loam
D) sand

38. What happens to the wax when a candle burns? It _________.

A) expands
B) becomes black
C) becomes yellow
D) melts

39. Name an instrument used for measuring temperature.

A) Thermometer
B) Rain gauge
C) Syringe
D) Telescope

40. Which sense do we use to identify paraffin?

A) Taste
B) Smell
C) Sight
D) Touch

41. __________ disease attacks dairy cows.

A) Lice and mites
B) Boat
C) Mastitis
D) Bots

42. A good way to prevent wind erosion is to ___________.

A) plant trees
B) graze goats
C) build dams
D) make contours

43. Good top soil with plenty of ___________ produce the best plants.

A) sand
B) compost
C) air pockets
D) snow

44. We can prevent soil erosion on sloping ground by _________ the slope.

A) burning vegetation on
B) frequently grazing animals on
C) ploughing up and down
D) ploughing furrows across

45. in order to feed the soil after we have cultivated it, we can use ______________.

A) fertilisers
B) rocks
C) water
D) dust particles

46. _________ insect pest attacks cabbage.

A) Millipede

B) Blight
C) Aphis
D) Centipede

47. _______ is used for leveling the soil.

A) Digging fork
B) Rake
C) Spade
D) Hoe

48. Garden tools should be stored in a ________.

A) fenced place
B) shady place
C) cold place
D) dry place

49. _________ is a root crop.

A) Spinach
B) Cabbage
C) Potatoe
D) Egg plant

50. The milk turns sour because of ________.

A) mastitis
B) bacteria
C) black quarter
D) boat

51. We can keep our bodies fit and strong by

A) Exercising regularly
B) drinking a lot of water
C) eating a lot of fatty foods
D) keeping our bodies clean

52. If the temperature of your body is 37° C, you are probably _____________.

A) overheated
B) sick
C) fainting
D) healthy

53. Animals and man use the _________ stored in food to help them do work.

A) taste
B) energy
C) colour
D) weight

54. ________ contain some substances which are harmful to the health of an individual.

A) Coffee
B) Drinks
C) Sweets
D) Drugs

55. In order to kill germs, water should be _______ before drinking.

A) boiled
B) filtered
C) covered
D) served

56. The insect which carries disease germs to uncovered food is __________.

A) louse
B) bee
C) house fly
D) beetle

57. In order to avoid accidents at night, one should wear _________ clothes when walking near the road.

A) bright
B) warm
C) black
D) tight

58. The disease likely to be caused by smoking is called __________.

A) lyphoid
B) lung cancer
C) polio
D) cholera

59. One of the following diseases is a lung disease.

A) Kwashiorkor
B) Marasmus
C) Tuberculosis (TB)
D) Diarrhoea

60. Which of the following sentences about tight fitting clothes is true?

A) They help stale air around the body to escape.
B) It is healthier to wear them.
C) They are more confortable.
D) They prevent the flow of blood through the skin.

61. The embroidery below shows a __________ stitch

A) feather
B) blanket
C) decorative
D) chain

62. For cutting cloths we should use a ____________.

A) thimble
B) pair of scissors
C) tape measure
D) needle

63. Mother's milk is a perfect food for ________.

A) babies
B) grandmothers
C) grandfathers
D) girls

64. These are the good sources of energy.

A) peas, cabbage, carrots
B) apples, bananas, oranges
C) bread, samp, sugar
D) bread, apples, carrots

65. To protect our bodies from heat and cold, we have to wear _____.

A) clothes
B) sacks
C) leaves
D) shoes

66. The best water for washing clothes is ________ water.

A) hard
B) greasy
C) muddy
D) warm

67. Which animals kill rats and mice in the store rooms?

A) Dogs
B) Cats
C) Hens
D) Pigs

68. _________ are a good source of vitamin C.

A) Eggs
B) Cakes
C) Oranges
D) Onions

69. When frying an egg one should use __________.

A) vinegar
B) water
C) fat
D) sauce

70. Which article is best for cleaning classroom chalk board.

A) hand
B) broom
C) grass
D) duster

3.4. Malawi

3.4.1. Overview

End of Primary School Examination

1. Tide of examination:	Primary School Leaving Certificate Examination (PSLCE)
2. Amount of fees charged:	Nil
3. Examination after years in primary school (6, 7, 8 years):	8 yrs
4. Children's entry age in primary school:	6 yrs
5. Number of pupils sitting examination in 1994:	103,833
6. Examination subjects offered:	11 subjects in 8 papers: • English • Arithmetic • General Knowledge (Geography, History, Civics) • Chichewa • Agriculture • Science & Health Education • Home Science • Needle Craft The last three subjects are optional. Candidates are required to choose anyone. In practice boys opt for Science & Health Education, girls choose between Home Science and Needle Craft. Each candidate therefore covers 6 subjects which all must be passed to qualify for the PSLCE. **Note:** From 1995 on the former 11 examination subjects are offered in 7 papers: • English (Paper I Composition, Paper II Grammar, Structure, Comprehension) • Chichewa (Paper I Composition, Paper II Grammar, Comprehension) • Arithmetic • General Paper (History, Geography, Civics) • Science (incl. Agriculture and Health Education) • Home Economics • Needle Craft The papers in subjects 1-4 are compulsory. One additional optional paper out of 5-7 is further needed.
7. Language of examination:	English (except for the national/local language paper)

8. Institution setting the examination questions:	Malawi National Examinations Board (MANEB)
9. Have there been any reforms in the examination questions?	Yes
When? (year) **What kind?**	1991 and 1995 Deliberate introduction of items testing higher cognitive skills (1991). Introduction of Multiple-Choice Test Items (1995).
10. Stages of development of examination questions (please describe):	• Appointment of chief examiners or setters. • Drafting of examination papers. • Typing of drafted examination papers. • Moderation of examination papers by panels. • Typing and proofreading of final examination papers.
11. Type of examination questions and distribution of different kind of questions.	No multiple-choice questions but mostly structured and essays. Composition: 50% recall, 50% application and higher order. However, note the changes since 1995.
12. Is continuous assessment incorporated in the final examination?	Yes [ ] No [x]
13. Are examination items pretested?	Yes [ ] No [x]
14. Which professional groups are involved in setting the examination questions?	• Secondary school teachers • School inspectors • Tutors of TTCs • Curriculum developers
15. Are the same professionals who set the examination questions involved in marking papers?	Yes [x] but in the capacity of team leaders, the markers being primary school teachers. No [ ]
16. How are examination results used for improving teaching in primary schools?	Chief examiners' reports which analyse examination are issued to schools.
17. To what other uses are the examination results put?	For selection to secondary school.
18. Main problem with Primary School Leaving Examinations?	Very competitive, to the extent that they guide the curriculum and promote cheating especially in the schools. There is also the problem of repetition at standard 8.

3.4.2. Innovations in Primary School Leaving Certificate Examinations (PSLCE) in Malawi and Overview of the 1993 Results

by Jacob Mwanza, Malawi National Examinations Board

Introduction

A consultancy report in 1987 by H.C.A. Somerset had pointed out that PSLCE and Junior Certificate Examinations (JCE), and PSLCE in particular, tended to test simple factual recall at the expense of more important cognitive skills such as comprehension, application and reasoning. Recall type of questions were found to be predominant especially in Science, History, Geography, and Agriculture. Further, candidates are usually asked to recall a single isolated fact: a name, a date or a place. Questions which probe understanding of causes or reasons are much less common. The questions ask »who«, »when«, »what« or »where«, rather than »why« or »how« (Somerset 1987).

These findings were confirmed by a research study in 1988 carried out by the Malawi National Examinations Board (MANEB). This study also indicated that sampling of content tended to be unbalanced in some subjects of the PSLCE.

Somerset gives the following examples picked from past examination papers to illustrate his point:

1. Mention the <u>four</u> types of bollworm that attack cotton.

2. Name the branch of Agriculture that a farmer practises when he grows

a) Cabbages.
b) Bluegum or Eucalyptus.
c) Millet or Maize.
d) Hibiscus flowers.

(1986 Agriculture)

3. Name the type of ship that carries

a) oil.
b) people.

4. Name two ways by which people in USA earn their living.

5. Which two countries in Africa are leading producers of copper?

6. Mention the two types of coffee grown in Tanzania.

Partly in the light of these findings, a contract for a Test Development Specialist (TDS) was arranged by the Malawi National Examinations Board (MANEB) in conjunction with the Ministry of Education and Culture (MOEC). The contract was managed by the British Council and funded by the World Bank through the 5th Education Sector Credit for the period 10 March 1989 to 10 March 1991.

Among the TDS's terms of reference were the following:

Purpose: Improve the Malawi Examination Systems

Main Duties:

- be responsible for the development of examinations at the Primary School Leaving

Certificate Examination, Junior Certificate Examination and Malawi School Certificate of Education levels;

- be responsible for curriculum development and construction and developing essay and objective examinations. Besides he will be responsible for pre-testing the items in Secondary Schools, Primary Schools and Teachers' Colleges;

- organise and conduct item writing workshops;

- train examiners in both essay and objective tests;

- establish and construct the blueprint for use by the examiners in both essay and objective tests;

- help determine the skills to be tested in each subject area. That is, determine the percentage of each skill to be tested in each subject area.

Primary School Examinations

Malawi has an 8-4-4 education system, which implies that pupils spend at least eight years in primary school before they can go to secondary school, if at all.

PSLCE have undergone major improvements in Malawi. In 1989 a workshop for chief examiners and moderators was held. The workshop exposed participants to principles of examining and to ways of devising questions which test higher cognitive abilities.

In five subjects which had tested mainly recall - Agriculture, General Paper (Geography, History and Civics), Science and Health Education, Home Economics, and Needle Craft - complete papers were eventually produced by workshop participants and MANEB staff.

Prior to pre-testing the papers, sets of specimen papers were issued to schools in May 1990 with notice that changes in examination questions would be effected for the first time in July 1991. Another innovation was the conversion of all the papers to answer booklet form. This enables candidates to write their answers in spaces next to the questions on the paper. It has the advantage of being easier for candidates to handle and for examiners to mark, and of reducing the amount of loose paper which MANEB has to issue to schools.

In July 1990 the papers were pre-tested. A sampling framework was devised by finding the pass rate in the 1989 examinations for each of the 24 districts in the country and then choosing a school from each district of an appropriate size with a pass rate similar to that of its district. Each school was asked to enter candidates for two out of the three subjects Agriculture, General Paper, and Science/Health Education, according to an overlapping pair design. The subjects Home Economics and Needle Craft were also pretested in those of the sample schools which offered them as options. Arithmetic, Chichewa and English were not pre-tested as the style of questioning in the new papers differed little from that in use.

Candidates' Performance in Pre-Tests

Pre-test papers were marked by chief and senior examiners during July and August 1990. At the end of marking, the examiners were interviewed for their impressions of how the questions had behaved. In general, their impressions were favourable with none thinking that the papers were far too difficult for the candidates.

The subsequent statistical item analysis confirmed the examiners' impressions. Also the marks which the candidates were given on the pre-test papers compared favourably with those on the real PSLCE although all pre-test papers were found to be more difficult, but not by such a wide margin.

The new-format examination has been in operation since 1991 and what needs to be done is to follow it up and reinforce it, preferably by holding workshops for examiners to review the results of the first new examinations and for teachers to ensure that the aims of the reforms are understood.

Use of Multiple-Choice Items for PSLCE

MANEB has been encouraged by the World Bank to use multiple-choice items in some subjects of the PSLCE. With increasing numbers of candidates, this would speed up marking and increase the reliability of the examinations. Multiple-choice testing is not new to Malawi at the primary school level. It was in use until about 20 years ago, when it was abolished, probably because of its restrictive effect on the development of pupils' power of expression. Plans, however, are under way for the introduction of multiple-choice testing of the 1995 PSLCE. During the months of June and July 1992, MANEB pre-tested multiple-choice papers at a sample of schools throughout the country in Science and Health Education, Agriculture and General Paper.

The 1993 Primary School Leaving Certificate Examinations

In 1993 the total numbers of pupils in class 8 was 96,434 and of these 63,771 were boys and 32,663 were girls, or 66.13% boys and 33.87% girls which means education is more accessible to boys than to girls. The number of pupils who passed the examination was 60,418 which represents a percentage pass of 62.65. The number of boys who passed the examination was 42,341 (66.40%) and the number of girls was 18,077 (55.34%). The table below compares the performance of boys and girls within the 28 education districts in Malawi.

Table I: Performance of Boys and Girls within the 28 Education Districts in the 1993 PSLCE

District	Total Entry (Girls)	No. of Girls Passing	Total Entry (Boys)	No. of Boys Passing
Chitipa	1,164	716 (61.5%)	2,406	1,725 (71.70%)
Karonga	774	562 (72.61%)	1,793	1,317 (73.45%)
Nkhata Bay	938	592 (63.11%)	2,055	1,452 (70.66%)
Rumphi	1,210	733 (60.58%)	2,101	1,440 (68.54%)
Mzimba	3,332	1,760 (52.82%)	6,679	4,206 (62.97%)
Kasungu	1,107	796 (71.91%)	2,068	1,562 (75.53%)
Nkhotakota	626	391 (62.46%)	1,406	978 (69.56%)
Ntchisi	588	376 (63.95%)	946	672 (71.04%)
Dowa	990	608 (61.41%)	2,273	1,602 (70.48%)
Salima	577	394 (68.28%)	1,520	1,168 (76.84%)
Lilongwe	1,936	1,158 (59.81%)	3,954	2,828 (71.83%)
Mchinji	623	392 (62.92%)	1,309	1,002 (76.55%)
Dedza	838	374 (44.63%)	1,788	1,123 (62.81%)
Ntcheu	1,203	622 (51.70%)	2,277	1,430 (62.85%)
Mangochi	791	459 (58.03%)	2,011	1,415 (70.36%)
Machinga	1,047	517 (49.38%)	2,040	1,296 (63.53%)
Zomba	1,586	687 (43.32%)	3,366	2,087 (62.00%)
Chiradzulu	1,029	489 (47.52%)	1,784	1,084 (60.76%)
Blantyre	1,199	477 (39.78%)	2,279	1,206 (52.92%)
Thyolo	1,403	793 (56.52%)	2,770	2,770 (73.39%)
Mulanje	1,874	885 (47.23%)	3,643	2,332 (64.04%)
Chikwawa	561	275 (49.02%)	1,696	955 (56.31%)
Nsanje	407	301 (73.96%)	1,061	849 (80.02%)
Mwanza	409	261 (63.81%)	794	525 (66.12%)
Blantyre City	3,258	1,204 (36.96%)	4,765	2,406 (50.49%)
Lilongwe City	1,872	1,281 (68.43%)	3,019	2,183 (72.31%)
Mzuzu City	625	506 (80.96%)	879	706 (80.32%)
Zomba Urban	667	454 (68.07%)	1,039	716 (68.91%)

What is clearly discernible from the table I is that, except for Mzuzu City, girls' performance

(% pass) was lower in all districts than that of boys in the 1993 PSLCE. The underachievement of girls is scantly documented in Malawi although it is common knowledge that girls do not perform as well as boys. But the fact that girls achieved less than boys nationwide in this examination (perhaps the trend is the same in earlier years) should be cause of concern. What is strange too about these results is that the percentage pass of both girls and boys is lowest in the biggest City of Blantyre (39.96% girls and 50.49% boys). Research in Malawi on the secondary school leaving examinations indicates that urban schools do better than rural schools, especially in science subjects. One would have expected a similar result at the primary school level.

Malawi is divided into three administrative regions, the Northern region, Central region and the Southern region. Although the country is so divided for administrative reasons, there are marked differences between the regions. The Northern region, for example, has one dominant language which is different from the one largely spoken in the South and Centre; and the people's customs in the Centre and South are, generally, different. There are, of course, other differences within the regions e.g. prevalence of several dialects and customs, but generally differences are more marked between regions. Nationwide all schools take the same examination on similar days and times. Because of the influence of such factors as catchment area, test bias, etc. on achievement, it becomes important to study pupils' achievement in different localities and hence attempt to see whether pass rates in different regions of the country are the same or not and why, if different, especially where the examination is the same.

Some research at the school leaving level indicates differential student achievement between the regions in some subjects. Table II shows that the percentage of pupils who passed the 1993 PSLCE in the Southern region of both girls and boys is lower than that of the Centre and North.

Table II: % Pass by Region for Boys and Girls

Region	% Pass Girls	% Pass Boys
South	47.80	62.04
Centre	61.70	70.81
North	60.54	68.16

The percentage of girls passing the 1993 PSLCE is lower than that of boys in all the regions and is lowest in the Southern region. The differences in the pass rates of girls in the North and Centre were marginal and so were the differences in the pass rates for the boys in the same regions. The reasons for these anomalies/similarities can only be entangled through indepth research.

Table III: Examination Statistics (means, standard deviations, medians and modes)

Subject	$\overline{X}$	SD	Mode	Median Mark
Science and Health Education	56.76	20.17	70	59
Arithmetic	57.92	23.50	73	60
General Paper	59.43	20.01	74	62
Agriculture	61.41	19.00	75	63
English	61.12	19.04	70	63
Needle Craft	71.67	11.94	76	73
Housecraft	73.47	12.47	75	75
Chichewa	75.19	12.27	78	77

The statistics on table III indicate that Science and Health Education was most difficult in the 1993 PSLCE followed by Arithmetic and General Paper (note the low means, large SDs and low median marks). The easiest subject was Chichewa (the national language) then Housecraft followed by Needle Craft. English and Agriculture were of the same difficulty. Arithmetic had the largest standard deviation implying that the dispersion of scores was widest while Needle Craft had the lowest followed by Chichewa and Housecraft. Arranged in order of difficulty with the most difficult first, they rank as follows:

1. Science & Health Education
2. Arithmetic
3. General Paper
4. Agriculture
5. English
6. Needle Craft
7. Housecraft
8. Chichewa

Science subjects therefore, except Agriculture, were the most difficult (i.e. Science and Health Education - $\overline{X}$ = 56.76 and Arithmetic - $\overline{X}$ = 57.92). This is not a surprising result. Our schools have problems imparting scientific knowledge either because of poor tuition, student anxiety or some other unknown factors.

These discussions, however, should be treated with caution not only because they are based on aggregated data but also because pupil background factors as well as school factors have not been accounted for in the analyses.

Note: From 1995 on the PSLCE has been changed in format and method. With the exception of the language paper in Chichewa and English who are each split into two papers (Composition and Multiple-Choice answers) all other papers use multiple-choice questions only.

3.4.3. 1995 Primary School Leaving Certificate Examinations/Science Incorporated Paper

THE MALAWI NATIONAL EXAMINATIONS BOARD

1995 PRIMARY SCHOOL LEAVING CERTIFICATE EXAMINATION

SCIENCE INCORPORATED

Subject Number: P192

Tuesday, 18 July

Time Allowed: 1 ½ hours
1.30 - 3.00 pm

Name of Candidate:____

Name of School: ____

Examination Number: ____

INSTRUCTIONS

1. **This paper contains 12 pages. Please check.**

2. Answer **all** questions. Write your answers on the separate **answer sheet** provided.

3. There are 70 questions in this paper.

4. **IMPORTANT**

Please hand over your computer answer sheet to the Invigilator: **DO NOT FOLD THE COMPUTER ANSWER SHEET.**

Because of the recent changes we have included the 1995 examination paper, now called

SCIENCE INCORPORATED.

EXAMINATION NO.:____________

Section A (25 marks)

AGRICULTURE

1. To which branch of Agriculture does the growing of cauliflower belong?

   A. Floriculture
   B. Olericulture
   C. Aboriculture
   D. Silviculture

2. Which of the following practices can control rosette in groundnuts?

   (1) early planting
   (2) correct plant spacing
   (3) planting resistant varieties

   A. (1) and (2) only
   B. (1) and (3) only
   C. (2) and (3) only
   D. (1), (2) and (3)

3. One advantage that indigenous cattle have over cattle introduced into this country from temperate countries is that indigenous cattle

   A. grow faster.
   B. are more tolerant to drought.
   C. have longer horns.
   D. produce more milk.

4. Which centre of early civilization used the source of power shown in **Figure 1** below?

   A. Egypt
   B. India
   C. Mesopotamia
   D. China

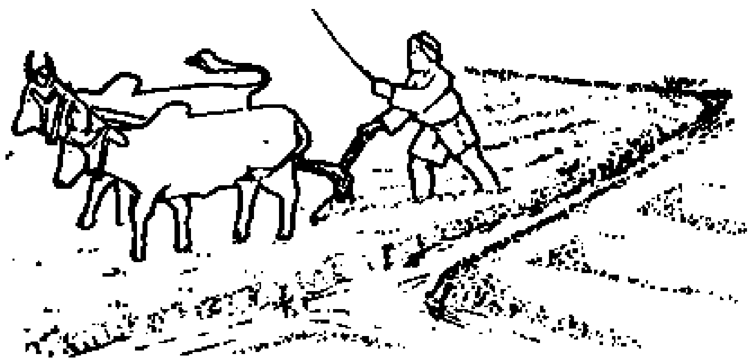

5. In an experiment, pupils applied 15 kg of UREA fertilizer to a one hectare plot of maize. In another hectare plot of maize they applied 15 kg of CAN fertilizer. In both plots all recommended production practices were followed. What might have been the objective of the experiment?

   A. to find out the type of fertilizer that gives the best yield
   B. to find out the amount of fertilizer that gives the best yield
   C. to find out if following recommended production practices improves yield
   D. to find out if application of fertilizer is necessary in maize growing

6. Why is it advisable to grow different types of crops on a farm?

A. to earn more money during marketing
B. to reduce the danger of total crop failure in times of low rainfall
C. to have enough to eat and surplus to sell to others
D. to be self reliant on crop production

7. Which of the following are advantages of crop rotation?

(1) It helps to maintain soil fertility.
(2) It helps to reduce labour.
(3) It helps to control diseases and pests.

A. (1) and (2) only
B. (2) and (3) only
C. (1) and (3) only
D. (1), (2) and (3)

8. Name the cheapest system of keeping chickens.

A. deep litter system
B. semi-intensive system
C. free range system
D. battery cage system

9.

STATEMENT		**REASON**
Pruning is one of the recommended practices in tree growing	**BECAUSE**	it protects trees from diseases and pests.

A. The statement is true but the reason is false.

B. The statement is false but the reason is a true fact.

C. Both the statement and reason are true and the reason is a correct explanation of the statement.

D. Both the statement and the reason are true but the reason is not a correct explanation of the statement.

10. A farmer bought 10 bags of fertilizer at K30 each, maize seed at K20 and paid K40 for labour. He harvested 20 bags of maize which he sold at K25 each. How much profit did he make?

A. K500
B. K220
C. K180
D. K140

11. **Figure 2** is a diagram of a cow.

Which of the following things can be made from the part of a cow labelled X?

A. brushes
B. buttons
C. shoes
D. bags

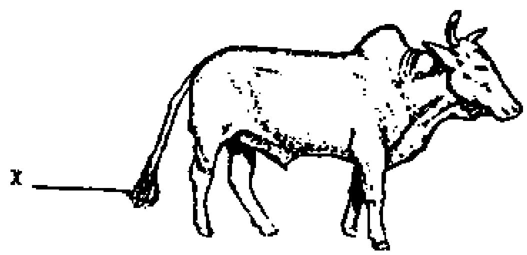

Figure 2

12. Which of the following practices can prevent egg-eating in a flock of layers kept in a deep litter system?

(1) allowing adequate ventilation in the room
(2) debeaking the layers
(3) providing more calcium in the feed

A. (1) and (2) only
B. (1) and (3) only
C. (2) and (3) only
D. (1), (2) and (3)

13. What should a fish farmer do if he observes black foul looking water in his fish pond?

A. He should stop feeding the fish.
B. He should harvest the fish.
C. He should apply fertilizer to the pond.
D. He should supply the fish with more food.

14. If Chitembana groundnut seed costs K4.20 per kilogram, and the seedrate for Chitembana groundnuts is 100 kg per hectare. What would be the cost of seed for 500 square metres? (1 hectare = 10,000 m^2).

A. K21
B. K210
C. K420
D. K2100

15. Which of the following fruits is **not** correctly matched with its method of propagation?

A. oranges	budding
B. pawpaw	seeds
C. apples	grafting
D. banana	layering

16. In animal husbandry the purpose of vaccinating animals is to

A. eradicate animal parasites.
B. control outbreak of diseases.
C. control internal parasites.
D. ensure high quality breeds.

17. Commercial farming is **best** described as the production of

A. hybrid crops and animals.
B. crops and animals to satisfy one's needs.
C. crops and animals for sale-
D. crops mainly for food and animals mainly for sale.

18. Which of the following is a list of storage pests only?

A. stalk borer, beetles, giant loopers
B. armyworm, locust, mealy bug
C. weevil, moth, rat
D. moth, aphids, mite

19. Name a natural resource which plants need to manufacture their food and is also a source of Vitamin D.

A. air
B. sunlight
C. water
D. soil

20. The **best** time to apply farmyard manure and compost manure in a maize garden i

A. when maize is about to tassel.
B. when maize is about knee high.
C. soon after germination.
D. before planting.

21. In an experiment pupils put some soil in a glass jar. They poured some water into the jar. The soil and water were shaken together. The mixture was allowed to settle. The diagram in **Figure** 3 below shows the components seen through the glass.

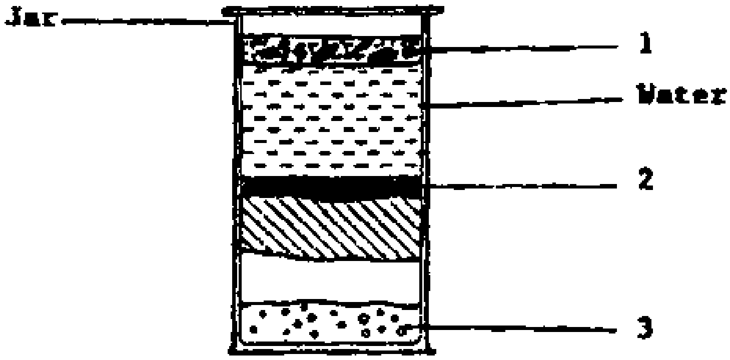

Figure 3

The numbered layers are likely to be

	1	2	3
A.	floating organic matter	sand	gravel
B.	gravel	floating organic matter	sand
C.	floating organic matter	clay	gravel
D.	silt	gravel	floating organic matter

22. Soil erosion may be prevented by

A. ridging across the slope.
B. practicing mixed farming.
C. early land preparation.
D. burning crops attacked by diseases.

23. Which of the following explains how early planting of maize gives high yields?

(1) The growing plants make full use of rainfall and plant food.

(2) The farmer has enough time to do other things apart from caring for maize.

(3) The plants escape some of the attacks by diseases and pests.

A. (1) and (2) only
B. (1) and (3) only
C. (2) and (3) only
D. (1), (2) and (3)

24. One of the methods of controlling foot and mouth disease of cattle is by

A. dipping the animals regularly.
B. vaccinating all the animals.
C. vaccinating the infected animals.
D. providing adequate spacing for the animals.

25. The diagrams in **Figure 4** below show some examples of vegetables.

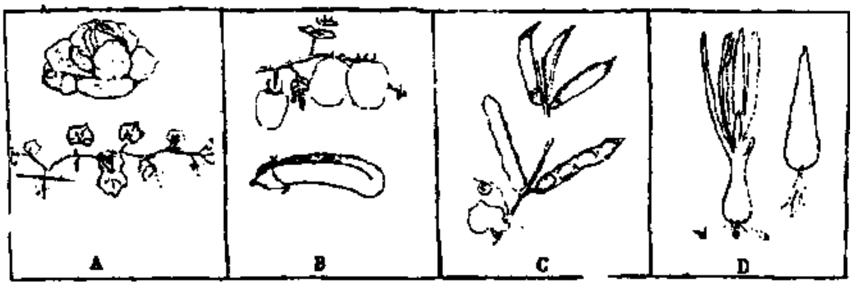

Figure 4

Which is a leguminous group?

Section B

SCIENCE (30 marks)

26. **Two** necessary conditions for a rainbow to form are

A. sunlight and humidity.
B. sunlight and raindrops.
C. clouds and sunlight.
D. raindrops and clouds.

Figure 5 is a **chart** showing recordings of wind direction. Use it to answer questions **27** and **28**.

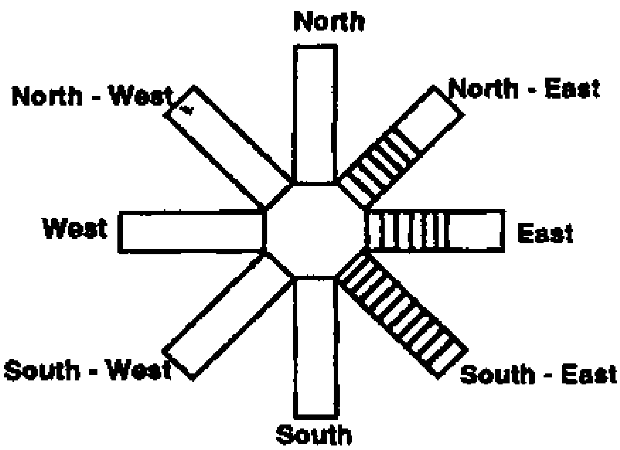

Figure 5

27. What is the name of this chart?

A. wind rose
B. wind vane
C. wind gauge (anemometer)
D. windsock

28. According to the chart, from which direction does the wind mostly come?

A. North-East
B. East
C. South-East
D. South

29. Which of the following liquids will conduct electricity?

(1) salt solution
(2) sugar solution
(3) soap solution

A. (1) and (2) only
B. (1) and (3) only)
C. (2) and (3) only
D. (1), (2) and (3

Study the **table** below and use it to answer questions **30** and **31**.

Planet	Distance from the Sun	Time for one trip round the sun
X	58 million kilometres	88 days
Venus	108 million kilometres	225 days
Earth	150 million kilometres	1 year
Jupiter	780 million kilometres	12 years
Uranus	2870 million kilometres	84 years
Neptune	4500 million kilometres	165 years

30. What is the name of the planet represented by letter X?

A. Mercury
B. Pluto
C. Saturn
D. Mars

31. There is another planet not shown in the table. It is 1430 million kilometres from the sun. About how long will it take this planet to make one trip round the sun?

A. 10 years
B. 30 years
C. 100 years
D. 250 years

32. The diagrams in **Figure 6** show simple electric circuits. When a bulb and battery are connected by wires as shown in **Figure 6a** the bulb lights.

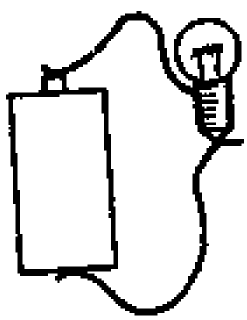

Figure 6a

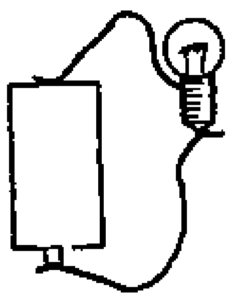

Figure 6b

What would happen if the battery is reversed as in **Figure 6b**?

A. The bulb will be brighter than in **Figure 6a**.
B. The bulb will be less bright than in **Figure 6a**.
C. The bulb will light as bright as in **Figure 6a**.
D. The bulb will not light.

33. A guitar has strings arranged as shown below. The strings are equally tight.

Which string will produce the lowest sound when plucked?

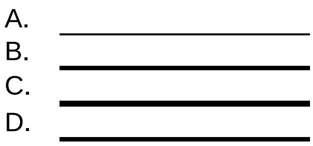

34.

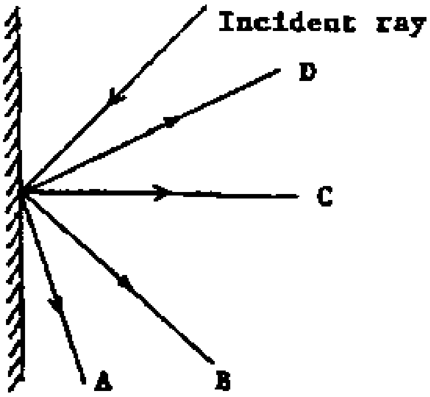

Figure 7

The diagram in **Figure 7** above shows an incident ray of light and four other rays labelled **A**, **B**, **C** and **D**. Which of the four rays is reflected from the incident ray?

35. Why are telephone wires tied loosely between telephone poles?

A. to allow the smooth passing of sound
B. to give room for the contraction and expansion of wire
C. to give room for vibrations inside the wire
D. to avoid wire breakage when a pole falls

The diagram in **Figure 8** shows how matter changes from one state to another due to heating or cooling. Use it to answer questions **36** and **37**.

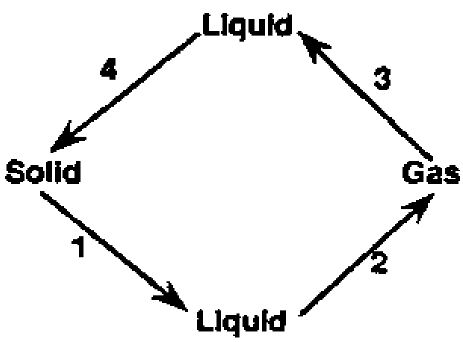

Figure 8

36. Which number represents the process of evaporation?

A. 1
B. 2
C. 3
D. 4

37. Which **two** numbers represent change of state resulting from cooling of the substance?

A. 1 and 2
B. 2 and 3
C. 3 and 4
D. 1 and 4

38. Where in a plant does most transpiration take place?

A. leaves
B. roots
C. stems
D. Flowers

39. The diagram in **Figure 9** below shows a balance with a 2 kg mass placed at 6 cm away from the balancing point.

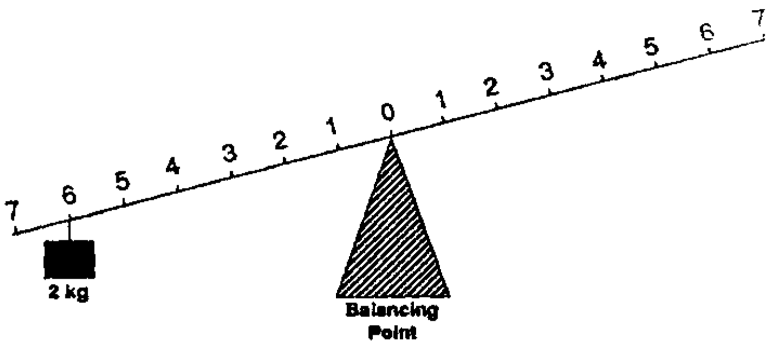

Figure 9

Where on the other side would you place a 4 kg mass in order to balance?

A. 2 cm away from the balancing point
B. 3 cm away from the balancing point
C. 4 cm away from the balancing point
D. 6 cm away from the balancing point

Study the diagram of a food web in **Figure 10** below and use it to answer questions **40** and **41**.

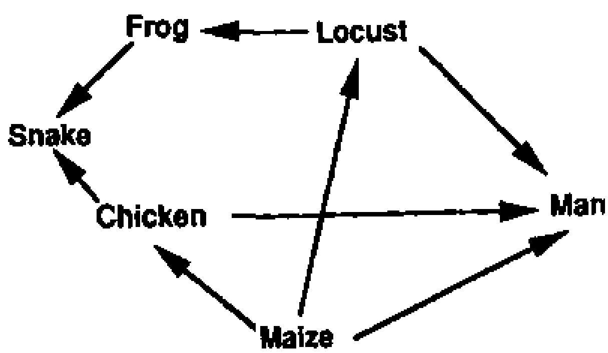

Figure 10

40. Name the producer.

A. maize
B. man
C. locust
D. Chicken

41. Which of the following food chains is correctly represented in the food web?

A. locust ⇒ maize ⇒ man ⇒ frog
B maize ⇒ chicken ⇒ locust ⇒ man
C. locust ⇒ chicken ⇒ snake ⇒ frog
D. maize ⇒ locust ⇒ frog ⇒ snake

42. Mary wanted to find out if sugar dissolves in water just as quickly as salt. She put two spoonfuls of sugar in a glass of water. She also put two spoonfuls of salt in another glass of water as shown in **Figure 11.** She stirred the two solutions slowly and timed how long it took the sugar and salt to disappear.

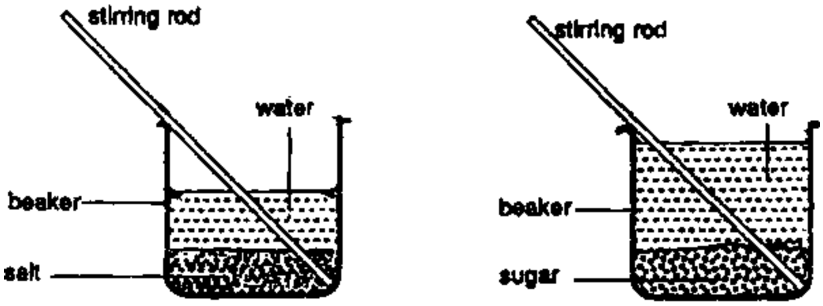

What should Mary have done to get accurate results?

A. She should have used equal volumes of water.
B. She should have used the same container.
C. She should have used hot water.
D. She should have stirred quickly.

43. In a simple cell, zinc and copper plates are called

A. positive poles.
B. negative poles.
C. electrolytes.
D. electrodes.

44. In **Figure 12** below are drawings of two measuring cylinders. **Cylinder 1** contains water as shown. When a stone is dropped in it the water level rises to a level as shown in **cylinder 2.** (1 ml = 1 cm^3)

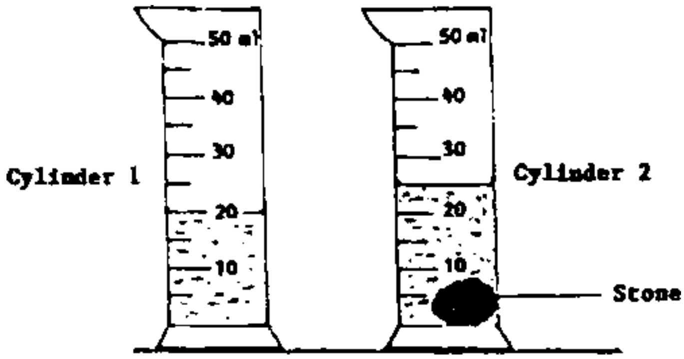

Figure 12

What is the volume of the stone?

A. 1 cm^3
B. 5 cm^3
C. 20 cm^3
D. 25 cm^3

45. The diagram in **Figure 13** below shows a column of water trapped in a glass tube.

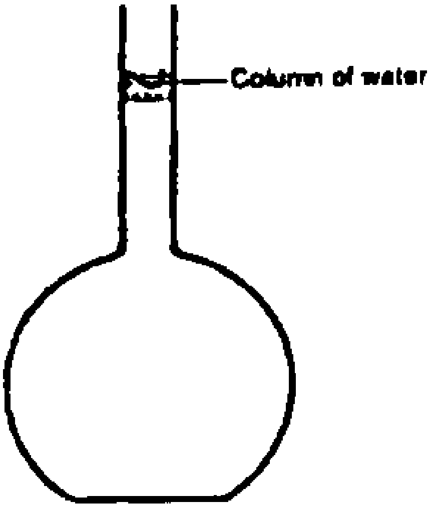

Figure 13

Why does the column of water rise on gentle heating?

A. Air inside the glass tube expands more than water.
B. Air can take the place of liquids when there is heat.
C. The heat pushes the column of water up.
D. Air expands when heated and pushes the water column up.

46. **Figure 14** shows four types of non-flowering plants labelled **A**, **B**, **C** and **D**.

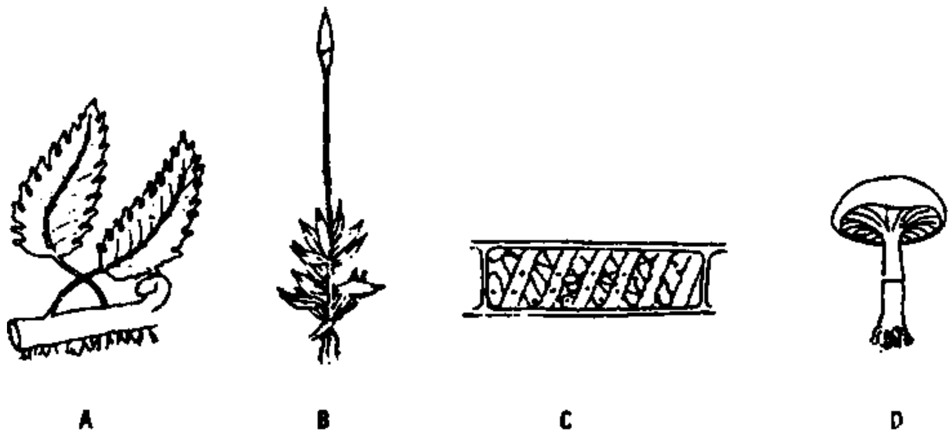

Figure 14

Which **one** does **not** manufacture its own food?

47. Substances which allow light to pass through are said to be

A. luminous.
B. spectrum.
C. transparent.
D. opaque.

Figure 15 is a diagram of a water cycle. Study it and answer questions **48** and **49.**

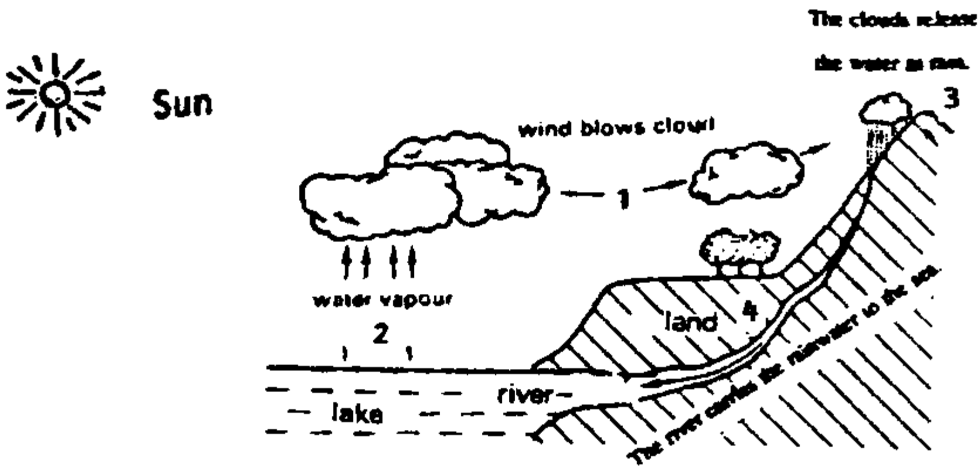

Figure 15

48. What is the importance of the sun in the cycle?

A. It is required in rainbow formation.
B. It provides heat which causes water to evaporate.
C. It is necessary in the formation of clouds.
D. It makes the water vapour to condense.

49. Which of the following is the correct order for the cyc

A. 1 ⇒ 2 ⇒ 3 ⇒ 4
B. 2 ⇒ 1 ⇒ 3 ⇒ 4
C. 4 ⇒ 1 ⇒ 2 ⇒ 3
D. 4 ⇒ 3 ⇒ 2 ⇒ 1

50. Which of the following is **not** a mammal?

A. whale
B. pigeon
C. bat
D. cow

51.

Figure 16

When the sun, the moon and the earth are in line as shown in **Figure 16** above, which of the following happens?

A. An eclipse of the sun happens.
B. An eclipse of the moon happens.
C. An eclipse of the earth happens.
D. A lunar-solar eclipse happens.

52. The rotten remains of dead animals and plants in the soil are called

A. loam
B. clay.
C. humus.
D. sand.

53. The diagrams in **Figure 17** below show two beakers filled with two different liquids, X and Y.

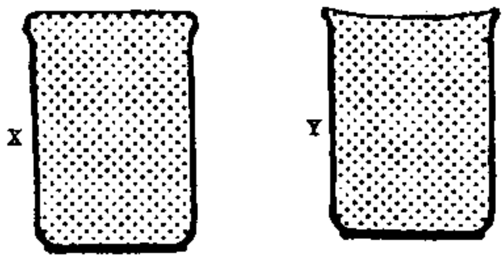

Figure 17

Which of the following statements about the two liquids are true?

(1) Particles of **X** hold each other more strongly than particles of **Y**.
(2) particles of **Y** hold each other more strongly than particles of **X**.
(3) **X** has a bigger drop size than **Y**.
(4) **Y** has a bigger drop size than **X**.

A. (1) and (2) only
B. (1) and (3) only
C. (1) and (4) only
D. (2) and (4) only

Figure 18 below shows the path of food through the body. Study it and use it to answer questions **54** and **55**.

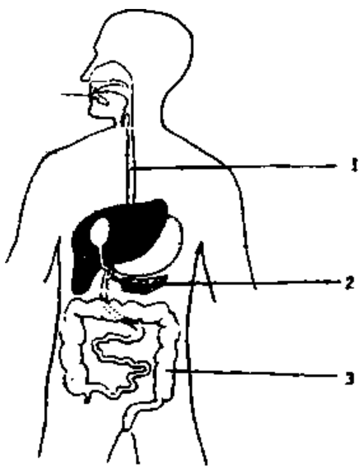

Figure 18

54. The parts labelled **1** and **3** are

	1	3
A.	gullet	stomach
B.	gullet	large intestines
C.	small intestines	large intestines
D.	email intestines	stomach

55. Name a fluid produced in the part labelled 2.

A. pancreatic juice
B. bile
C. saliva
D. gastric juice

Section C (15 marks)

HEALTH EDUCATION

56. Which of the following diseases can be caused by careless disposal of human excreta?

A. malaria
B. common cold
C. dysentery
D. Marasmus

57. The first aid to be given to a person bitten by a dog is to

A. tie with a cloth just above the bitten part.
B. wash the bitten part with soap and water.
C. cover up the wound with a dressing.
D. take the patient to the hospital.

58. **Figure 19** is a bar chart showing the relationship between smoking habits and the number of lung cancer patients. Use it to answer questions **58** and **59**.

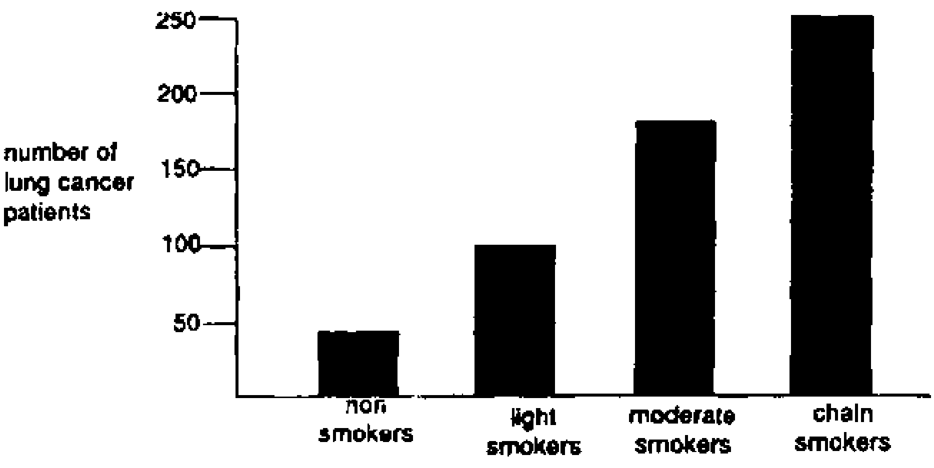

Figure 19

Which group has the lowest danger of suffering from lung cancer?

A. chain smokers
B. moderate smokers
C. light smokers
D. non-smokers

59. Which of the following statements is true?

A. Only smokers can suffer from lung cancer.
B. Smoking increases the danger of suffering from lung cancer.
C. Both smokers and non-smokers have equal chance of suffering from lung cancer.
D. Non-smokers can never suffer from lung cancer.

60. At the water works why is alum added to water?

A. to filter the water
B. to stick together pieces of mud
C. to kill germs
D. to dissolve unwanted particles

61. One of the advantages of the under-five clinic is that it allows

A. babies to eat balanced meals.
B. expectant mothers to learn baby care.
C. babies to be vaccinated against childhood diseases.
D. mothers to discuss baby care.

62. How is the malarial parasite transmitted to a new host?

A. through body contact
B. through breathing
C. through eating poorly cooked food
D. through mosquito bite

63. Which of the following tissues join bones to muscles?

A. cartilage
B. fat
C. ligament
D. tendon

64. The part of the ear that carries messages from the ear to the brain is the

A. eardrum.
B. eustacian tube.
C. auditory nerve.
D. optic nerve.

65. **One** of the causes of anaemia is the deficiency of

A. mineral iron.
B. mineral calcium.
C. vitamin C.
D. vitamin D.

66. What kind of fracture is shown in **Figure 20** below?

Figure 20

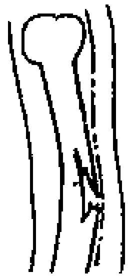

A. complicated fracture
B. simple fracture
C. compound fracture
D. greenstick fracture

67. The immunity that one gets after antibodies have been injected into the body is called

A. inborn immunity.
B. acquired active immunity.
C. acquired passive immunity.
D. natural immunity.

68. Which of the following happens when we do **not** do exercises?

A. We become lonely.
B. We get tired easily.
C. We become weak.
D. Our bones become soft.

69. At lunch Chifundo ate **nsima,** cabbage, an orange and cassava. The meal was not a balanced diet because it did not contain

A. proteins..
B. vitamins.
C. carbohydrates.
D. mineral salts.

70. Study the diagram in **Figure 21** below and answer the question that follows.

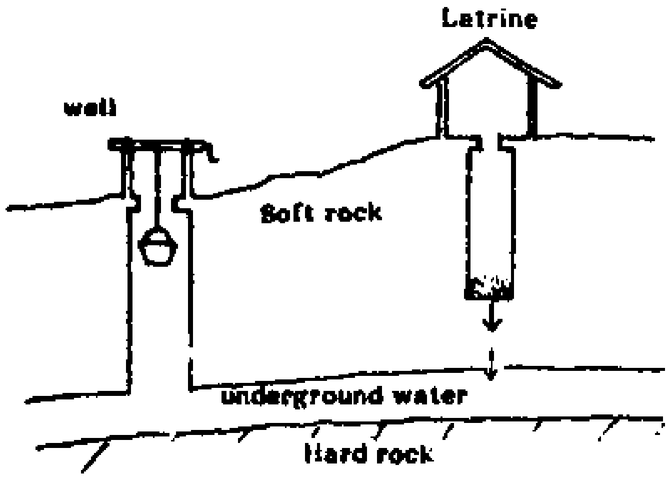

Figure 21

What is wrong with this set-up?

A. The well can be contaminated.
B. The latrine can fall into the well.
C. The wind can blow bad smell from the latrine to the well.
D. The latrine can be used by too many people coming to draw water.

END OF QUESTION PAPER

3.4.4. 1994 Primary School Leaving Certificate Examinations/Science and Health Incorporated Paper

THE MALAWI NATIONAL EXAMINATIONS BOARD

1994 PRIMARY SCHOOL LEAVING CERTIFICATE EXAMINATION

SCIENCE AND HEALTH EDUCATION

(100 marks)

Subject Number: P191

Wednesday, 13 July

Time Allowed: 2 hours
1.30 - 3.30 pm

Instructions:

1. **This paper contains 16 pages. Please check.**

2. Write the name of the **District** where you are writing the examination, **Centre Number** and your **Examination Number** on every sheet in the spaces provided.

3. Answer **all** questions. Write your answers in the spaces provided.

4. If you find any question too difficult, leave it and return to it later if you have time.

5. If you have any questions about these instructions, ask them now. You may not ask questions once the examination has begun.

DISTRICT	**CENTRE NO.**	**EXAMINATION NO.**
________________	________________	________________

1994 **P191**

SCIENCE

1. a. What do we call water when it is in solid form?

____ **(1 mark)**

b. Figure 1 is a diagram showing a saucer and a cup containing equal volumes of water.

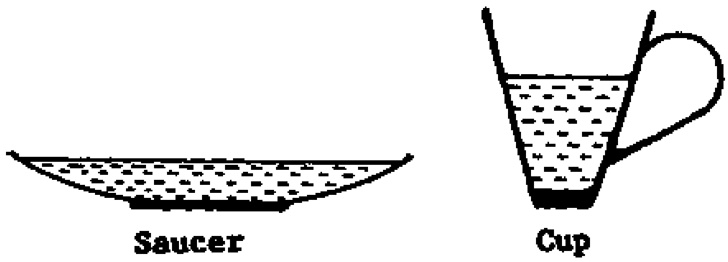

Figure 1

Suggest a reason why the water will evaporate faster from the saucer than from the cup.

____ **(1 mark)**

2. Figure 2 is a diagram showing the result of mixing paraffin, water and cooking oil (covo) labelled **A**, **B** and **C** but not necessarily in that order.

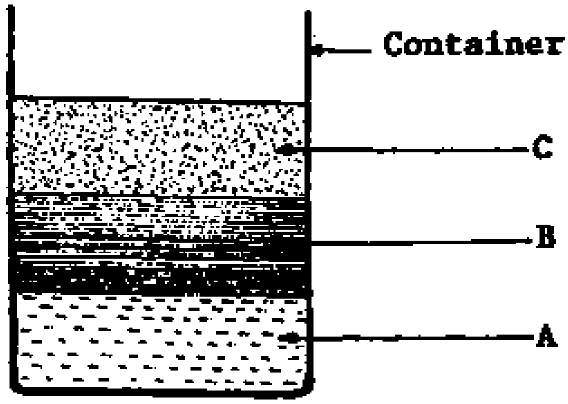

Figure 2

a. Which of these, **A**, **B** or **C** is paraffin?

____ **(1 mark)**

b. Give a reason for your answer to 2a.

____
____ **(1 mark)**

3. If an axe with a wooden handle is left lying in the sun for some hours, the axe feels hot while the handle feels warm.

Suggest a reason for this difference.

____
____ **(1 mark)**

4. a. (i) Mention **one** type of mosquito.

____ **(1 mark)**

(ii) What disease is transmitted by the type of mosquito you have mentioned in 4a (i)?

____ **(1 mark)**

b. Give any **two** ways in which the number of mosquitoes in a given area can be reduced.

____
____
____
____ **(2 marks)**

c. What does an ant lion eat?

____ **(1 mark)**

5. **Figure 3** is a diagram showing an empty plastic bottle **A** and the same bottle **B** when it is squeezed.

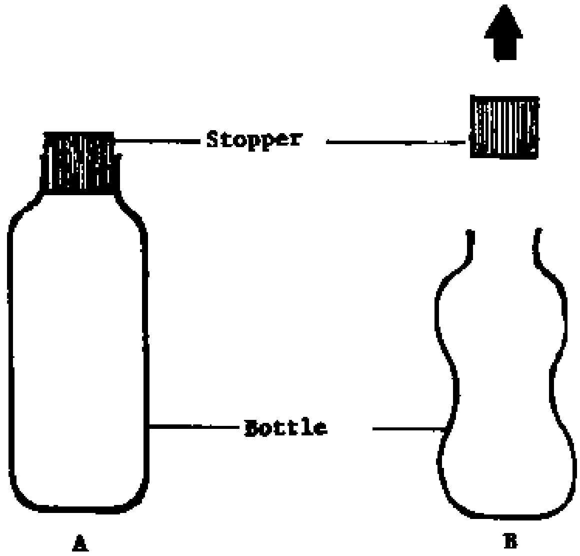

Figure 3

Why does the stopper in bottle B go out?

____
____ **(2 marks)**

6. a. State **two** conditions that are necessary for the multiplication of bacteria.

____ **(2 marks)**

b. In what **two** ways are bacteria important to man?

____
____
____
____ **(2 marks)**

7. a. What is the centre of the solar system?

____
____ **(1 mark)**

b. Name the type of movement the earth makes which results into day and night.

____ **(1 mark)**

c. Explain why the new moon is not visible.

____ **(1 mark)**

d. Give **one reason** why life is impossible on the moon.

____
____ **(1 mark)**

8. **Figure 4** is a diagram showing an Irish potato tuber that is beginning to grow:

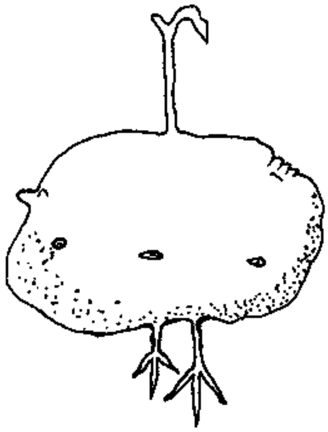

Figure 4

a. Name **two** features which show that the tuber is a stem.

____
____ **(2 marks)**

b. What is the function of this type of stem?

____ **(1 mark)**

9. a. Name the **two** parts which make up a stamen of a flower.

____
____ **(2 marks)**

b. Maize is usually cross pollinated.

(i) What is cross pollination?

____
____ **(1 mark)**

(ii) How are the chances of self pollination reduced in a maize plant?

____
____ **(1 mark)**

10. a. What feature makes the toes of the hind legs of a frog similar to those of a duck?

____ **(1 mark)**

b. What is the function of the feature you have mentioned in 10a?

____ **(1 mark)**

11. The image of an object on the film in a pin-hole camera is upside down. What property of light does this show?

____ **(1 mark)**

12. a. State **two** ways in which sounds differ.

____

____ **(2 marks)**

b. **Figure 5** is a diagram of one of the musical instruments played in Malawi.

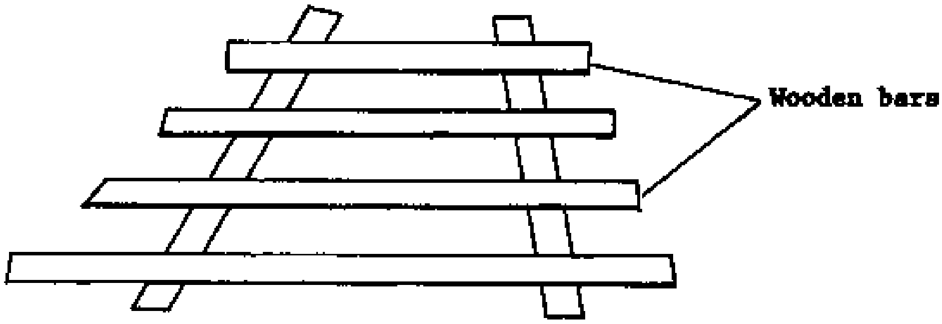

Figure 5

(i) What is the name of the instrument?

____ **(1 mark)**

(ii) How is this instrument played?

____ **(1 mark)**

13. a. Explain why mineral salts are easily washed away in sandy soil.

____

____ **(1 mark)**

b. Mention **one** way in which earthworms are useful in the soil.

____ **(1 mark)**

14. The **table** below shows readings on a wet and dry bulb thermometer taken from Monday to Friday.

	Mon	**Tue**	**Wed**	**Thur**	**Frid**
Dry Bulb	30°C	27°C	28°C	30°C	30.5°C
Wet Bulb	25°C	26°C	27.5°C	24.5°C	24°C

a. On which day was humidity lowest?

____ **(1 mark)**

b. (i) On which day did it likely rain?

____ **(1 mark)**

(ii) Give a reason for your answer to 14b (i).

____ **(1 mark)**

15. Figure 6 is a diagram showing how living things depend on each other for food.

Figure 6

a. Complete the diagram by filling in the blank box. (1 mark)

b. What would happen to:

(i) the grasshoppers if all the frogs disappeared?

____ **(1 mark)**

(ii) the organism you have mentioned in 15a if all the frogs disappeared?

____ **(1 mark)**

c. Give a reason for your answer to 15b (ii).

____
____ **(2 marks)**

16. a. Mention **two** plants which can be grown using a stem.

____
____ **(2 marks)**

b. How does water from the ground get to all parts of the plant?

____
____ **(2 marks)**

17. **Figure 7** is a diagram showing a balancing beam.

4 bottle-tops of the same weight were placed on **side A**
3 cm away from the centre.

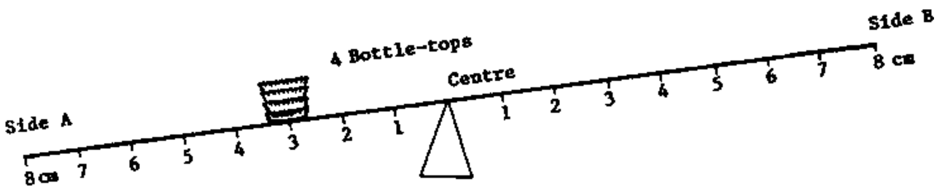

Figure 7

On **side B**, where would you put 2 bottle-tops of the same weight as those on **side A** in order to balance the beam? Show your work.

____
____
____
____
____ **(3 marks)**

18. A pupil is given the materials shown in **figure 8** below.

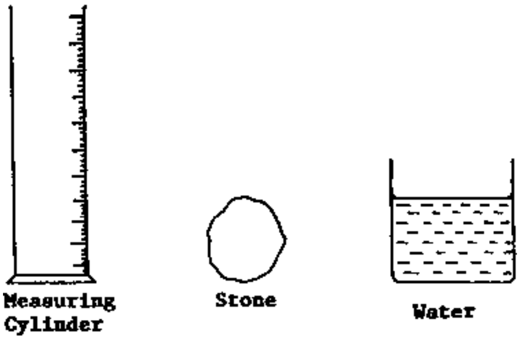

Figure 8

Explain how the pupil would use the measuring cylinder and the water to measure the volume of the stone.

____ **(3 marks)**

19. **Figure 9** is a diagram showing beaks of two different birds.

Figure 9

a. Suggest the type of food each one of them feeds on.

(i) **A** feeds on _______________________________________ **(1 mark)**

(ii) **B** feeds on _______________________________________ **(1 mark)**

b. Give reasons for your answer to 19a (i) and (ii).

(i) **A** ____
____ **(1 mark)**

(ii) B ____
____ **(1 mark)**

20. **Figure 10** is a diagram showing a ray of light striking a glass containing water.

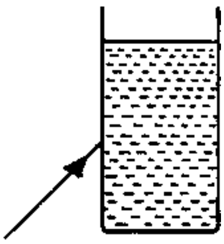

Figure 10

Complete the diagram to show how the ray passes through the water and comes out on the other side of the glass. **(2 marks)**

HEALTH EDUCATION

21. a. What do you call a place where two or more bones meet?

____ **(1 mark)**

b. Mention **one** common injury that can occur where two or more bones meet.

____ **(1 mark)**

c. State **one** sign of the injury you have mentioned in 21b.

____ **(1 mark)**

22. a. Study the following list of food items:

cassava, fish, beans, pineapples, rice and mangoes.

Choose any **three** food items from the above list which make a balanced meal.

____ **(2 marks)**

b. How does each of the **three** food items you have chosen in 22a help to make a balanced meal?

(i) ____

(ii) ____

(iii) ____ **(3 marks)**

23. a. A patient with diarrhoea should be given plenty of water to which some substances are added.

Mention the **two** substances.

(i) ____

(ii) ____ **(2 marks)**

b. Give **one** reason why a patient with diarrhoea should be given such a drink.

____
____ **(1 mark)**

24. State why it is necessary to

a. prevent things from entering our eyes.

____
____ **(1 mark)**

b. have our eyes checked by an eye specialist regularly.

____
____ **(1 mark)**

25. **Figure 11** is a diagram showing a road sign.

Figure 11

a. What is the meaning of this road sign?

____ **(1 mark)**

b. **Figure 12** is a diagram showing two roads crossing.

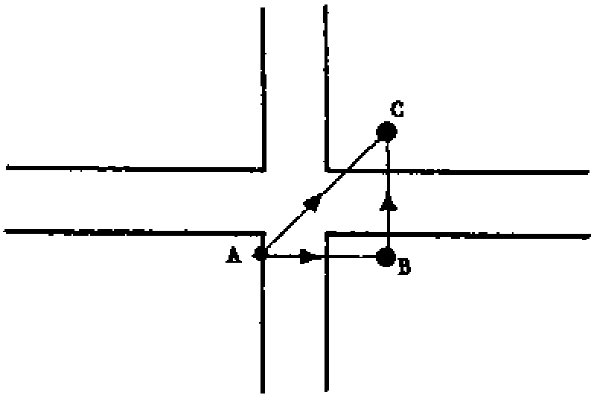

Figure 12

(i) You want to go to **C** from **A** on a busy day. Which path is safer, **A** to **C** direct, or **A** to **B** and then to **C**?

____ **(1 mark)**

(ii) Give a reason for your choice.

____
____ **(1 mark)**

26. a. State **two** reasons why it is more important to breathe through the nose than through the mouth.

____ **(2 marks)**

b. (i) Write **one** possible cause of nose bleeding.

____ **(1 mark)**

(ii) What first aid would you give to a patient with nose bleeding?

____
____
____
____ **(2 marks)**

27. a. What is immunisation?

(1 mark)

b. Mention **one** way in which immunisation is done.

(1 mark)

c. State **one** disease that can be prevented by immunisation.

(1 mark)

28. Figure 13 is a flow diagram which can be used by a family to make river water safe for drinking.

RIVER WATER → FILTERED → X → STORED IN A CONTAINER

Figure 13

a. Why is the water filtered?

(1 mark)

b. Why is the water still not safe for drinking after being filtered?

(1 mark)

c. (i) What process is carried out at **X**?

(1 mark)

(ii) Explain why the process carried out at **X** is important.

(1 mark)

d. How is the water protected from contamination when stored in the container?

(1 mark)

29. a. Give **two** differences in behaviour between a person who is drunk and one who is not drunk.

Drunk	**Not Drunk**
(i)	
(ii)	

(2 marks)

b. Give **two** reasons why it is important to avoid smoking indian hemp (chamba).

(i)

(ii) **(2 marks)**

30. a. State **two** ways in which a person can get infected by rabies.

(i) ____

(ii) ____ **(2 marks)**

b. Give **two** ways in which dogs can be protected from diseases.

(i) ____

(ii) ____ **(2 marks)**

31. a. Name any **one** organisation which deals with Public Health in Malawi.

____ **(1 mark)**

b. Mention **two** parts of the human body where bilharzia parasites feed and lay their eggs.

(i) ____

(ii) ____ **(2 marks)**

END OF QUESTION PAPER

3.4.5. 1994 Primary School Leaving Certificate Examinations/Agriculture Incorporated Paper

THE MALAWI NATIONAL EXAMINATIONS BOARD

1994 PRIMARY SCHOOL LEAVING CERTIFICATE EXAMINATION

AGRICULTURE

Subject Number: P012

Tuesday, 12 July (100 marks) **Time Allowed: 2 hours**
1.30 - 3.30 pm

Instructions:

1. **This paper contains 15 pages. Please check.**

2. Write your **District Name**, **Centre Number**, and **Examination Number** In the spaces at the **top of every page.**

3. Answer **all** questions in the spaces provided.

4. The marks for each question are indicated in the brackets.

5. If you find any question too difficult, leave it and return to it later.

6. If time allows, check your answers.

7. If you have any questions about these instructions, ask them now. You may not ask questions once the examination has begun.

Answer **all** questions

(Each question carries 4 marks)

1. The diagram below shows a fruit crop.

a. Name the fruit crop.

____ **(1 mark)**

b. Name the planting material for the crop shown in the diagram.

____ **(1 mark)**

c. Give any **two** varieties of the fruit crop.

(i) ____ **(1 mark)**

(ii) ____ **(1 mark)**

2. a. How do cattle get infected by liverfluke?

____ **(1 mark)**

b. What effect does liverfluke have on cattle?

____ **(1 mark)**

c State any **two** methods of controlling liverfluke.

(i) ____
____ **(1 mark)**

(ii) ____
____ **(1 mark)**

The map below shows the national parks and game reserves of Malawi.

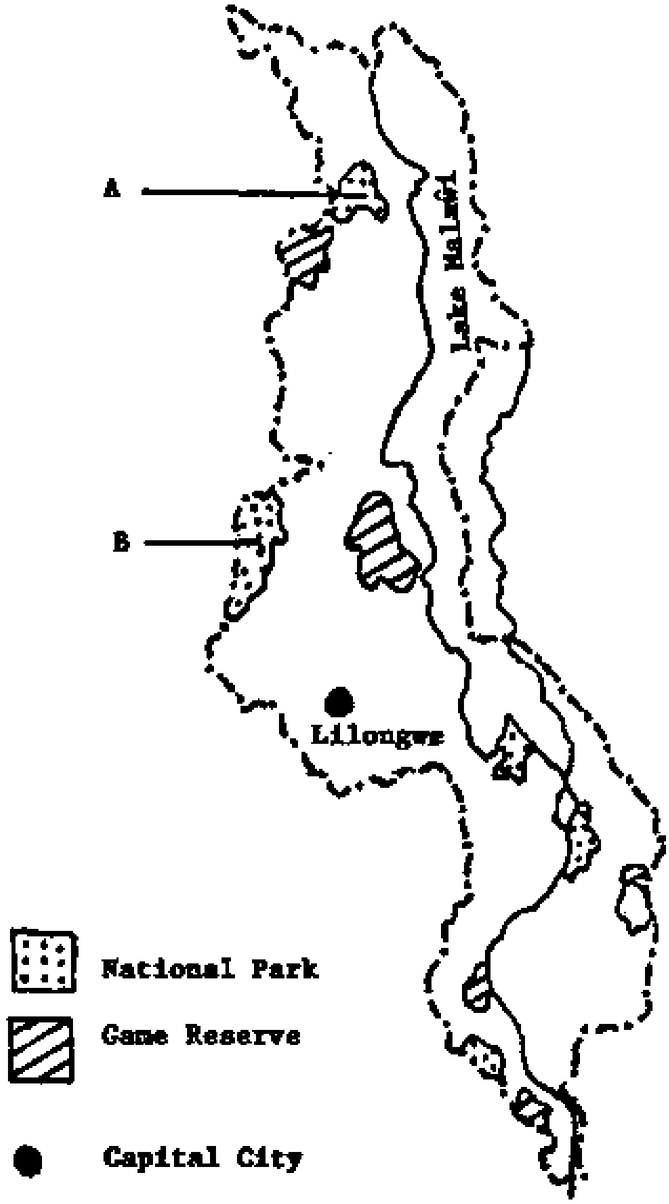

a. Name the National Parks labelled **A** and **B.**

A ____ **(1 mark)**

B ____ **(1 mark)**

b. Name any **one** animal which is commonly found in **B.**

____ **(1 mark)**

c. State any **one** method of conserving wild life in a National Park.

____ **(1 mark)**

4. The diagram below shows a farm implement.

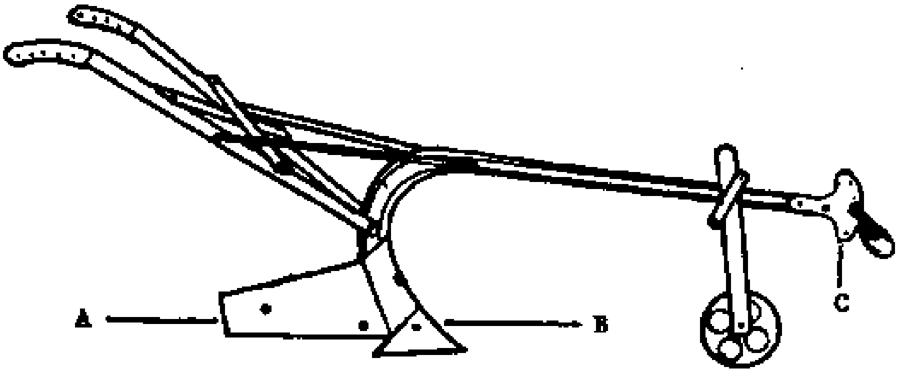

a. Name the farm implement.

____ **(1 mark)**

b. Identify the parts labelled **A** and **B.**

A ____ **(1 mark)**

B ____ **(1 mark)**

c. What is the function of the part labelled **C**?

____ **(1 mark)**

5. a. Name any **two** varieties of oranges grown in Malawi.

(i) ____ **(1 mark)**

(ii) ____ **(1 mark)**

b. Name the most serious disease of oranges.

____ **(1 mark)**

c. How can the named disease be controlled?

____ **(1 mark)**

7. The diagram below shows a method of harvesting maize.

a. Name the method.

____ **(1 mark)**

b. State **two** advantages of this method of harvesting maize,

(i) ____
____ **(1 mark)**

(ii) ____
____ **(1 mark)**

c. State **one** disadvantage of this method of harvesting maize.

____
____ **(1 mark)**

a. Name **one** tool that is recommended for transplanting vegetable seedlings.

____ **(1 mark)**

b. What is the recommended spacing for large headed cabbage varieties?

____ **(1 mark)**

c. State **two** ways of controlling aphids in cabbage.

(i) ____ **(1 mark)**

(ii) ____ **(1 mark)**

8. a. State any **two** reasons why farmers keep farm records.

(i) ____ **(1 mark)**

(ii) ____ **(1 mark)**

b. Explain the **two** main types of farm records.

(i) ____ **(1 mark)**

(ii) ____ **(1 mark)**

9. The diagram below shows a crop pest.

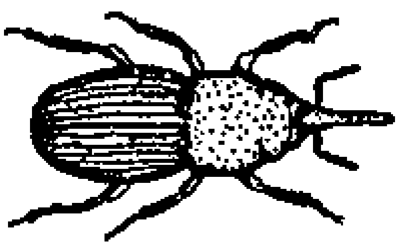

a. Identify the pest.

____ **(1 mark)**

b. Name the crop attacked by the pest.

____ **(1 mark)**

c. State the damage caused by the pest.

____
____ **(1 mark)**

d. How can the pest be controlled?

____
____ **(1 mark)**

10. a. What are natural resources?

____
____ **(1 mark)**

b. How can the following natural resources be conserved?

(i) Soil ____ **(1 mark)**

(ii) Vegetable ____ **(1 mark)**

(iii) Water ______________________________________ **(1 mark)**

11. The diagram below shows a vegetable crop.

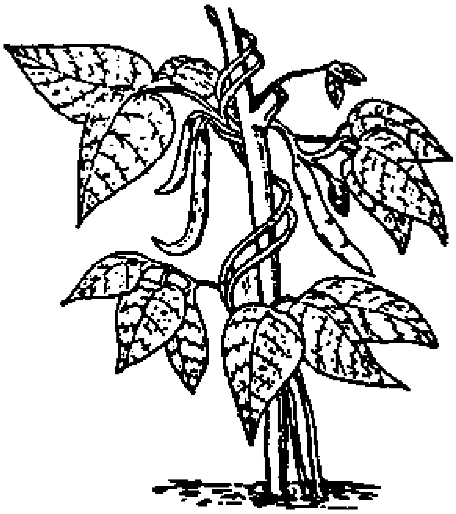

a. Name the crop.

____ **(1 mark)**

b. To which group of vegetables does it belong?

____ **(1 mark)**

c. Give a reason why the crop does not require Nitrogen fertilizer.

____ **(1 mark)**

d. How would you control aphid attack in the named crop?

____ **(1 mark)**

12. The table below shows characteristics of soil.

Soil Characteristics	**Soil A**	**Soil B**	**Soil C**
Texture	Very fine	Course	Fine to course
Aeration	Poor	Good	Moderately good
Water holding	Very high	Low	Medium
Nutrient holding capacity	Very high	Low	Medium

a. Identify soils **A** and **B.**

(i) **A** ____ **(1 mark)**

(ii) **B** ____ **(1 mark)**

b. Which of the **three** soils **A**, **B** and **C** is most suitable for the growing of maize?

____ **(1 mark)**

c. How would you improve the water holding capacity of soil **B**?

____

____ **(1 mark)**

13. The diagram below shows parts of a cotton plant.

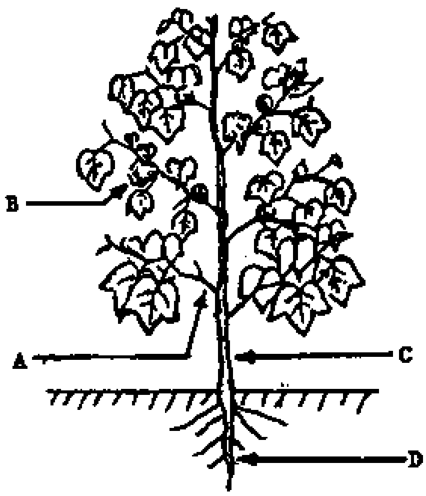

a. Name the parts labelled **A** and **B.**

A ____ **(1 mark)**

B ____ **(1 mark)**

b. What is the function of the part labelled **C**?

____ **(1 mark)**

c. Identify the type of root system labelled **D**.

____ **(1 mark)**

14. The diagram below shows a type of cattle khola.

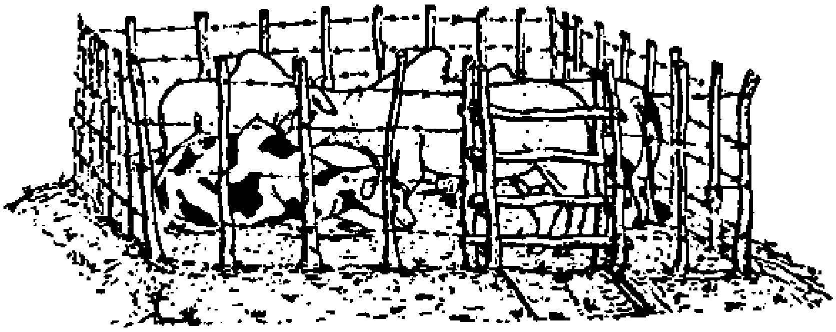

a. Name the type of khola.

____ **(1 mark)**

b. Give any **two** disadvantages of such type of khola.

(i) ____
____ **(1 mark)**

(ii) ____
____ **(1 mark)**

c. State **one** way of improving this type of khola.

____ **(1 mark)**

15. a. Define the term experiment.

____ **(1 mark)**

b. Give **one** reason why field experiments are important in agriculture.

____
____ **(1 mark)**

c. What is fertilizer trial?

____
____
____
____ **(2 mark)**

6. Explain how the following environmental factors influence agriculture production:

a. Rainfall

____
____
____
____ **(2 marks)**

b. Temperature

____
____
____
____ **(2 marks)**

17. The diagram below illustrates groups of class of land.

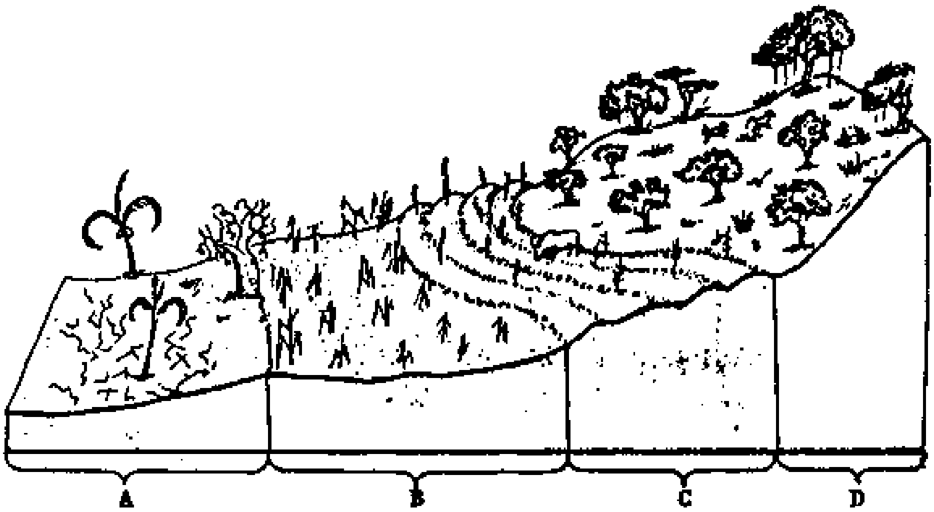

a. Name the groups of classes labelled **A** and **C**.

A ____ **(1 mark)**

C ____ **(1 mark)**

b. State the most suitable use for each of the groups of classes of land labelled **B** and **D**.

(i) **B** ____ **(1 mark)**

(ii) **D**____ **(1 mark)**

18. Name **one** tool or implement used in each of the following centres of civilization:

a. China

____ **(1 mark)**

b. Egypt

____ **(1 mark)**

c. India

____ **(1 mark)**

d. Mesopotamia

____ **(1 mark)**

19. a. Mention **two** types of fish suitable for pond breeding.

(i) ____ **(1 mark)**

(ii) ____ **(1 mark)**

b. Give **one** reason why manure is applied to fish ponds.

____ **(1 mark)**

c. Give **one** reason why farmers are encouraged to grow fish in ponds.

____ **(1 mark)**

20. a. Name any **two** types of goats based on function.

(i) ____ **(1 mark)**

(ii) ____ **(1 mark)**

b. Explain any **one** principle of goat management.

____
____
____
____ **(2 marks)**

21. The diagrams below show some common tools on farms in Malawi.

A

B

a. Name the tools labelled **A** and **B.**

A ____ **(1 mark)**

B ____ **(1 mark)**

b. Give **one** use of each tool.

A ____ **(1 mark)**

B ____ **(1 nark)**

22. State **two** advantages and **two** disadvantages of deep litter system of keeping poultry.

a. advantages:

(i) ____
____ **(1 mark)**

(ii) ____
____ **(1 mark)**

b. disadvantages:

(i) ____
____ **(1 mark)**

(ii) ____
____ **(1 mark)**

23. A farmer sows Malimba groundnuts at one seed per hole, 10 cm apart in a single row on ridges which are 90 cm apart.

a. Calculate the plant population per hectare. Show your working.

____
____
____
____
____
____
____
____ **(2 marks)**

b. State **two** ways in which high plant population reduces yield.

(i) ____
____ **(1 mark)**

(ii) ____
____ **(1 mark)**

24. State any **four** reasons for the rapid agricultural development in Malawi after independence.

a. ____
____

b. ____
____

c. ____
____

d. ____
____ **(4 marks)**

25. A farmer has 1.5 hectares of land on which to plant hybrid maize. The recommended seed rate is 25 kg per hectare.

a. How much seed should he buy? Show your working.

____
____
____
____
____
____
____
____ **(2 marks)**

b. How much fertilizer should he buy if the recommended rate is 100 kg of urea per hectare? Show your working.

____
____
____
____
____
____
____
____ **(2 marks)**

END OF QUESTION PAPER

Note: This paper contains 15 papers

3.5. Namibia

3.5.1. Overview

End of School Examination

1. Title of examination:	Junior Secondary Certificate (JSC)
2. Amount of fees charged:	≈ US$6
3. Examination after years in school (6, 7, 8 years):	10 yrs
4. Children's entry age in primary school:	6 yrs
5. Number of pupils sitting examination in 1994:	15,000 - 20,000
6. Examination subjects offered:	9
7. Language of examination:	English
8. Institution setting the examination questions:	Examinations Directorate
9. Have there been any reforms in the examination questions?	Yes
When? (year)	1992
What kind?	Increase the number of multiple-choice items. Change from only recall to other domains as well. Make more use of diagrams. Include more continued assessment and start making use of projects.
10. Stages of development of examination questions(please describe):	• Make sure all people know the syllabus. • Invite people to the item-writing workshop (to be nominated by the regional offices). • Put up a specification grid. • Divide in groups. Groups work on various topics. Every member of the group writes items (15-20 each) according to the specification grid. • Workshop co-ordinated by curriculum expert or examination expert. • Groups exchange items, moderate, improve or reject. • Items stored in bank. • Examination expert/curriculum expert finalizing examination paper.
11. Type of examination questions and distribution of different kind of questions	30% multiple-choice 5% closed type 5% matching 60% structured

12. Is continuous assessment incorporated in the final examination?	Yes [x] No [ ]
If yes, to what extent?	It varies from 33%-50%.
13. Are examination items pretested?	Yes [ ] No [x] 4 pilot schools will write a full Junior Secondary Certificate examination used for pre-testing purposes.
14. Which professional groups are involved in setting the examination questions?	• Secondary school teachers • School inspectors (subject advisors) • Examination and curriculum experts
15. Are the same professionals who set the examination questions involved in marking papers?	Yes [x] No [ ] They are involved in item-writing and marking, however, not responsible for final examination papers' design.
16. How are examination results used for improving teaching?	Every year an examinators' report and moderators' report is sent to schools after examinations, giving hints and recommendations on how to improve answering items and teaching.
17. To what other uses are the examination results put?	• Junior Secondary Certificate • Entering into IGCSE (International General Certificate of Secondary Education) (selection) • Monitoring education, teachers' performance, curriculum.
18. Main problem with School Leaving Examinations?	• Lack of experts in multiple-choice item-writing. • Lack of experts in continued assessment. • Lack of resources.

Note: The introduction of an end of primary school examination is planned for 1999. The following statements concern the existing Junior Secondary Certificate only.

3.5.2. Curriculum Development and Examinations in Namibia

by Jacobus A. Myburgh, Directorate of Curriculum Research and Development, and Cavin M. Nyambe, Directorate of Examinations

Curriculum Development since Independence

Namibia gained its independence in March 1990 after 105 years under foreign rule, thereby becoming the last country in Africa to be de-colonialized. Namibia is a vast, sparsely populated country on the South Atlantic coast. It is bordered by Botswana and Zimbabwe in the East, South Africa in the South and Angola and Zambia in the North. The capital is Windhoek. Namibia occupies an area of 82,4296 sqkm and is mainly arid or semi-arid, with the Namib Desert, the oldest in the world, extending along the entire coastline. In the North Eastern Caprivi Region the annual rainfall is, however, approximately 600 mm per annum. We have a population of 1.5 million with a population density of 1.5 persons per square kilometre. There are eleven ethnic groups. A variety of 18 different languages and dialects are spoken. The official language is English.

450,000 pupils enrolled in Namibia's schools for 1992. The distribution in the different school phases are as follows.

Grade	1 - 3 (junior primary)	204,350
	4 - 7 (senior primary)	156,825
	8 - 10 (junior secondary)	75,013
	11 - 12 (senior secondary)	13,269

Following independence it was decided by the Ministry of Education and Culture to embark upon a major reform process. Reform was initiated in junior secondary education. Local and international experts were given the task of redrafting the curricula for grades 8-10. The change-over to the new curriculum coincided with the change-over to English as the medium of instruction.

Learners in the Junior Secondary School (grades 8, 9 and 10) are now following the Namibian Junior Secondary Curriculum. The first national, external examination for grade 10 took place in 1993. There are, however, a number of project schools testing the new curriculum and allowing us to gain experience so as to enable us to make the necessary changes, if any, to the curriculum.

The Senior Secondary School introduced the internationally recognized IGCSE curriculum in 1994. The reform of primary school education has also been initiated and the new Broad Curriculum has been finalized. Curriculum panels have developed new syllabi for all the subjects.

Changes in Examinations

Examinations can be looked at in two ways as they can be internal which is school-based and external which is done at national level. The examinations are controlled by the Directorate of Examinations in Namibia.

(1) Primary School Leaving Examination (Grade 1-7)

Before independence, Namibia was divided into eleven ethnic groups, thus each group or region had full control over its internal examination. Question setting, marking and writing of progress reports was school-based. Promotion schedules which show all marks recorded for the year were approved by the regional inspectors. In some regions semi-external papers were set by different examiners in the region for grade 7.

Namibia does not offer any external examination after the primary phase. The mode of examination undertaken is school-based assessment, which is mainly under the control of the Regional Directors, Head-teachers and Subject Teachers. The examination is used for promotion and selection to the next grade or class. It is the responsibility of each school to draw up its own examination question papers and all other related materials. It is difficult to establish a national standard as the examination is not done at national level. The Ministry is preparing to introduce a school leaving certificate after Grade 7 in the near future. Experts from the Curriculum division and Examination division are engaged in the drafting of syllabi for Grade 5, 6 and 7.

(2) Junior Secondary School Leaving Examination

There is more emphasis put in this section. After the first two years (Grades 8 and 9) an internal examination is done by the school. At the end of the last part of the year (Grade 10) an external examination at national level is written by all schools registered. The Directorate of National Examinations and Assessment is responsible for control and administration. The New Broad Curriculum was implemented in 1991 on which a new national examination was written in November 1993. Examiners and markers are appointed at national level. Marking is centrally done, therefore it is easier to work out all the statistical information needed. It is a subject examination where a learner is graded on positive achievement. A certificate is awarded for every subject graded. The grade symbols are as follows: A, B, C, D, E, F, G, and UN (ungraded).

Learners are to do the following six compulsory subjects:

- English
- Mathematics
- Physical Science
- Life Science
- Geography
- History

There are options from the following subjects:

- Accounting
- Business Management
- Agricultural Production & Farming Technology
- Technical Subjects
- Music
- School Art, and many others.

A points system is used for the best six subjects as an entrance to IGCSE or HIGCSE.

Learners are expected to complete the Junior Secondary School between the age of 15-16 years.

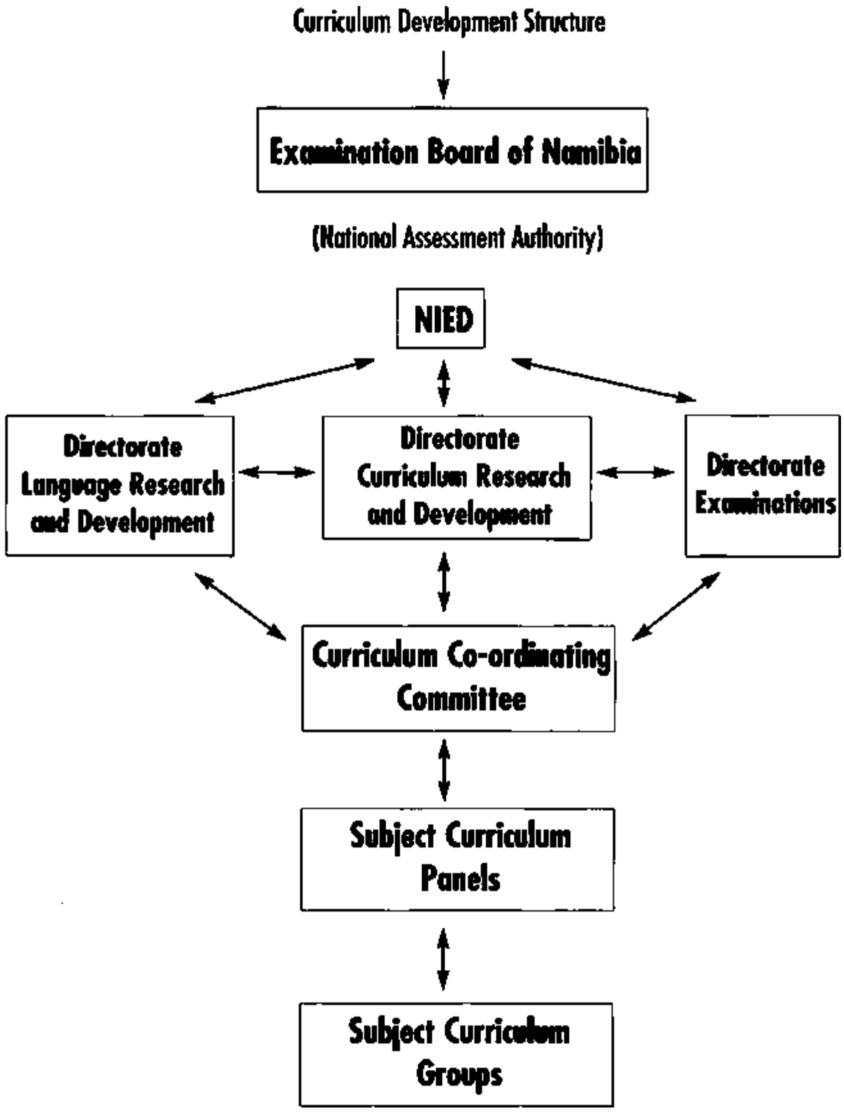

NIED = National Institute for Educational Development

3.5.3. Agricultural Production and Farming Technology: Scheme of Assessment. Terminal Examination 1992

Paper 1

Section A: (45 minutes) 20 Multiple questions. (1 mark each); 5 close type (fill in the missing word, 1 mark each); matching type (5 marks)

Total: 30 marks

Section B: (1 hour 30 minutes) compulsory short-answer and structured question with subdivisions weighted as follows:

1.	General Agriculture (section 1)	15 marks
2.	Crop Husbandry (section 2)	25 marks
3.	Animal Husbandry (section 3)	20 marks
4.	Farming Technology (section 4)	10 marks
	Total	70 marks

This will carry 50% while the continuous Assessment will also carry 50%. The final mark will be 100%.

Sample question from the Grade 10 Specimen paper for 1992 exams. (From the Draft)

Section A. Choose

1. What process involves loosening the soil before planting in order to obtain a deep, loose soil?

a. harrowing
b. levelling
* c. ploughing
d. ridging

2. What is the function of the epididymis?

a. To make sperm
b. To produce sperm
* c. To store sperm
d. To transport sperm

Fill in the missing words

3. (a) The water which is available to plants is known as.........?

(b)................is the production of crops and the rearing of livestock.

4. Choose from column B the correct word or phrase which suits the word in column A. Write the correct letter in the box provided.

Column A		Column B
1. mealie meal	☐	A. Enzyme

2. Groundnut cake	[ ]	B. Ovary
3. hand-hoe	[ ]	C. Testes
4. Spermatogenesis	[ ]	D. Carbohydrate-rich
5. Amylase	[ ]	E. Farm tool
	[ ]	F. Protein rich Concentrate
	[ ]	G. Roughage

<u>Section B</u>

1. State the function of the following parts of the ruminants digestive system.

   a. Teeth...............
   b. Rumen...............
   c. Small intestine......

The diagram shows the reproductive system of a ruminant. Label the parts labelled A, B, C, D and F.

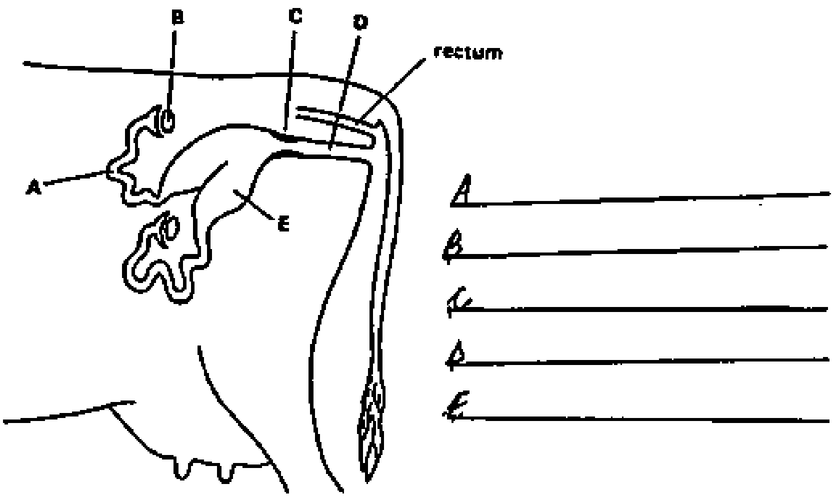

3.6. South Africa

3.6.1. Independent Examinations Board.[1] Report on Standard 7 Pilot Programme. 1993 Examinations Programme

by D.R. Pitt

[1] **Note:** In South Africa the Independent Examinations Board, a NON-Governmental Organization, offers an end of primary school examination. Preparations and trials were conducted in 1992/93. Since 1994 Std. VII leavers of primary school can sit this examination. The draft syllabus and examination papers (General Science) from 1993 and 1995 are included.

Examining Panels

In 1993 the IEB Standard 7 Pilot Examinations Programme was expanded to include I examinations in Combined Science, History and Geography, and examinations in English First and Second Language and Mathematics. In English and Mathematics continuity was maintained, members of the panel in most cases being previous examiners. The new examinations were set by examining panels, the members being nominated by the user groups and the final selection made by the IEB. Apart from three members of the Mathematics panel of four, all examiners were drawn from teachers in IEB schools.

Participants

Approximately 5,000 candidates from 77 schools were entered for the 1993 examinations. The subject breakdown was as follows:

English First Language:	3,500
English Second Language:	1,550
Mathematics:	4,500
Combined Science:	3,893
History:	3,219
Geography:	3,026

The participating schools were affiliated to different education authorities, and came from these areas:

Eastern and Western Cape
Transkei
Natal and Kwa-Zulu
Leboa, Gazankulu and Venda
Northern Transvaal
Bophuthatswana
The Vaal Triangle
Orange Free State

The school entries varied in number from 6 to 199, and were diverse in composition, some being single sex and others co-educational.

Comment

1993 marks the end of the Pilot Project begun in May 1990. Most of the objectives then set out have been achieved. They were:

a. to gain expertise in the organization of a national examination and to build a cumulative record in English of the first IEB matriculation group of 1993;

b. to involve schools in all parts of South Africa affiliated to varying education autorities;

c. to involve teachers in every stage of the examining process;

d. to explore the viability of testing a wide range of pupils in one examination.

One of the most significant developments of the project has been the establishment and expansion of the user groups, and the teachers involved have found the contacts across the academic and geographical spectrum immensely exciting and valuable.

3.6.2. Independent Examinations Board. Standard 7 Examinations 1993 - Combined Science

by Rose Smuts

The enormous differences in syllabus content which exist from school to school severely limited the points of reference of the 1993 Combined Science examination.

The skills which were considered by the initial examinations committee as relevant to 14 year olds are not adequately learnt in many schools, viz. construction of graphs, experimental method etc. Therefore a description of content and skills to be examined was circulated to all participating schools in July for their information.

Examination Format of the final 1993 Combined Science Examination

This was successful in the following respects:

a. most candidates appeared to have sufficient time to complete the examination;

b. most candidates were able to answer some questions on the paper;

c. many teachers commented favourable on a **new approach** - »a breath of fresh air«; this was on the skills orientation of questions and the examination presentation;

e. the marks achieved by all candidates were realistic, taking into account the limitations.

This examination was unsuccessful in the following respects:

• the »academically advantaged« candidates from well established schools who wrote the examination in their home language found the paper too easy - some silly errors were still made by these candidates, but some of their marks were unrealistically high;

• the factual content was limited and candidates were able to score well without having to put in a realistic effort.

Comments on the Examination

Section A

1. Many candidates do not know how to answer a series of multiple-choice questions.

2. The diagrams, graphs and some tables of data, needed clearer presentation.

3. Many people have unrealistic expectations of 14 year old Std 7 pupils; pages must not be too crowded as this leads to confusion; the language used must be simple and clear; giving of instructions and provision of data or text, must be at a level which is accessible to all.

4. Terms (such as hypothesis) need clarification; perhaps the syllabus should specify the use of some special terms (in this example »Aim« is preferable).

5. Certain skills considered by some teachers to be fundamental are lacking in many candidates. The IEB needs to set up communications and assistance in these areas:

- understanding text which includes some terminology
- graphs - their construction and interpretation
- science methodology - simple experimental procedure
- understanding and application of units of measurement
- models and their application for teaching the »abstract«
- biological sectional views

6. The »New Syllabus for 1994«, available early in 1994, will identify skills which can be used in order effectively to »teach« certain areas of the syllabus; the Exemplar Booklet, available in February 1994 will have further examples of lesson plans, ideas for teaching, notes on how to get into graphs - their construction, application and interpretation, some examination questions, flow charts etc.

Section B

1. The open ended, creative-type questions were poorly answered; they were either misinterpreted or the answers given were too non-specific. Their wording needs clarification.

2. The graphs were disastrous; they were either left out altogether, or incorrectly drawn - the application of bar graphs as opposed to line graphs, needs further elaboration. Identification of the dependent and independent variable was confused.

3. Experimental design was poorly executed; clear concise descriptions of method need encouragement; identification of variables also needs elaboration.

4. Calculations of a simple nature (% calculation) were poorly handled. There is no realization of cross-curriculum application of knowledge in some candidates.

5. The examination questions need to be relevant to everyday examples or situations.

6. Difficulties with language/text appear to be the root cause of many problems.

7. Pupils are unfamiliar with some »basic« materials e.g. cottonwool etc.

3.6.3. Draft Syllabus for General (Combined) Science[1] 1994

Independent Examinations Board

[1] Implementation date: 1994. This document is of an interim nature, subject to revision. It will form part of a larger syllabus covering the whole of the junior secondary phase.

1. Introduction

The Independent Examination Board syllabus for General (or Combined) Science for the General Education Certificate is, at this stage, an interim syllabus designed for the examination of students (age 14 - plus: Standard Seven level) from the end of 1994.

Both the syllabus itself and the use of the name »General Science« are based on the current core syllabus. However, the IEB believes that a very different approach to the teaching of the subject will be encouraged by the setting of examination questions which focus on the aims and objectives outlined below.

The content of this syllabus has thus been reorganised in what is believed to be a more integrated and more meaningful way. The order of presenting the syllabus content is in no way finite and can be re-arranged by any inventive teacher, in order to suit his/her particular vision. An integrated approach is however strongly recommended as integrated questions will be used in the IEB examination.

The main sections of this syllabus are as follows:

- Aims
- General Objectives
- Specific Curriculum Objectives
- Assessment Specifications

2. Aims/Educational Purpose of the Course

The aims are the same for ALL students independent of background and/or future career prospects in the sciences. They are not listed in any order of priority. The course is based on the assumption that the examination will take place at the end of the compulsory phase of schooling, and that successful candidates will have demonstrated a good basic education in science serving as a foundation both for further learning and for life in general.

The aims are to enable students to acquire:

2.1 Some basic SCIENTIFIC KNOWLEDGE which will enable them to understand their world better, communicate better and/or pursue studies in science or science dependent courses, beyond the Std. 7 level.

2.2 Certain manual and thinking skills which are useful in solving scientific and/or everyday problems.

2.3 An awareness of what science is all about and of its importance in everyday life.

2.4 Certain useful attitudes about themselves, their safety, the processes of science and their environment.

3. General Objectives

These relate to the four main aims listed above.

3.1 Knowledge

At the end of the course students should be able to demonstrate KNOWLEDGE AND UNDERSTANDING of:

- some basic scientific concepts and their application to familiar and new situations;
- some facts and concepts concerning the environment;
- the use of appropriate (although basic) instruments for scientific experiments;
- simple scientific vocabulary and its usage.

Note: The Curriculum Objectives define the factual material that students need to recall and explain. Questions testing these objectives will often begin with one of the following words: define, state, describe, explain or outline.

3.2 Manual and Thinking Skills

A. HANDLING INFORMATION AND SOLVING PROBLEMS

Students should be able, in words or using other written forms of presentation (ie. symbolic, graphical & numerical) to:

1. locate, select, organise and present information from a variety of sources;

2. transpose information from one form to another;

3. manipulate simple numerical and other data;

4. use information to identify patterns, report trends and draw simple conclusions;

5. present reasoned explanations of phenomena, patterns and relationships;

6. make simple predictions and propose hypotheses, giving supporting evidence;

7. solve problems, including some of a quantitative nature.

B. EXPERIMENTAL SKILLS AND INVESTIGATIONS

Students should be able to:

1. use techniques, apparatus and materials (including the following of a sequence of instructions where appropriate);

2. make and record observations and measurements;

3. interpret and evaluate experimental observations and data;

4. plan and carry out simple investigations, evaluate methods and suggest possible improvements (including the selection of techniques, apparatus and materials).

3.3 Attitudes

Students should have acquired attitudes of:

- self confidence and independence;
- responsibility for their own learning;
- perseverance and tenacity;
- tolerance for the views of others;
- co-operation when working in a group;
- open-mindedness towards alternative perspectives;
- a healthy scientific scepticism requiring justification;
- an enthusiasm for science.

3.4 Awareness

Students should demonstrate an awareness of:

- the inter-relationship of different disciplines of science;
- the relationship of science to other aspects of the school curriculum;
- the dangerous nature of certain substances and phenomena;
- the fun and enjoyment to be found in the science curriculum;
- the importance of objectivity in observation.

Note: Although the objectives 3.3 and 3.4 are difficult to measure in an external examination, they are considered as very important. Teachers should devise their own methods of assessing these summatively.

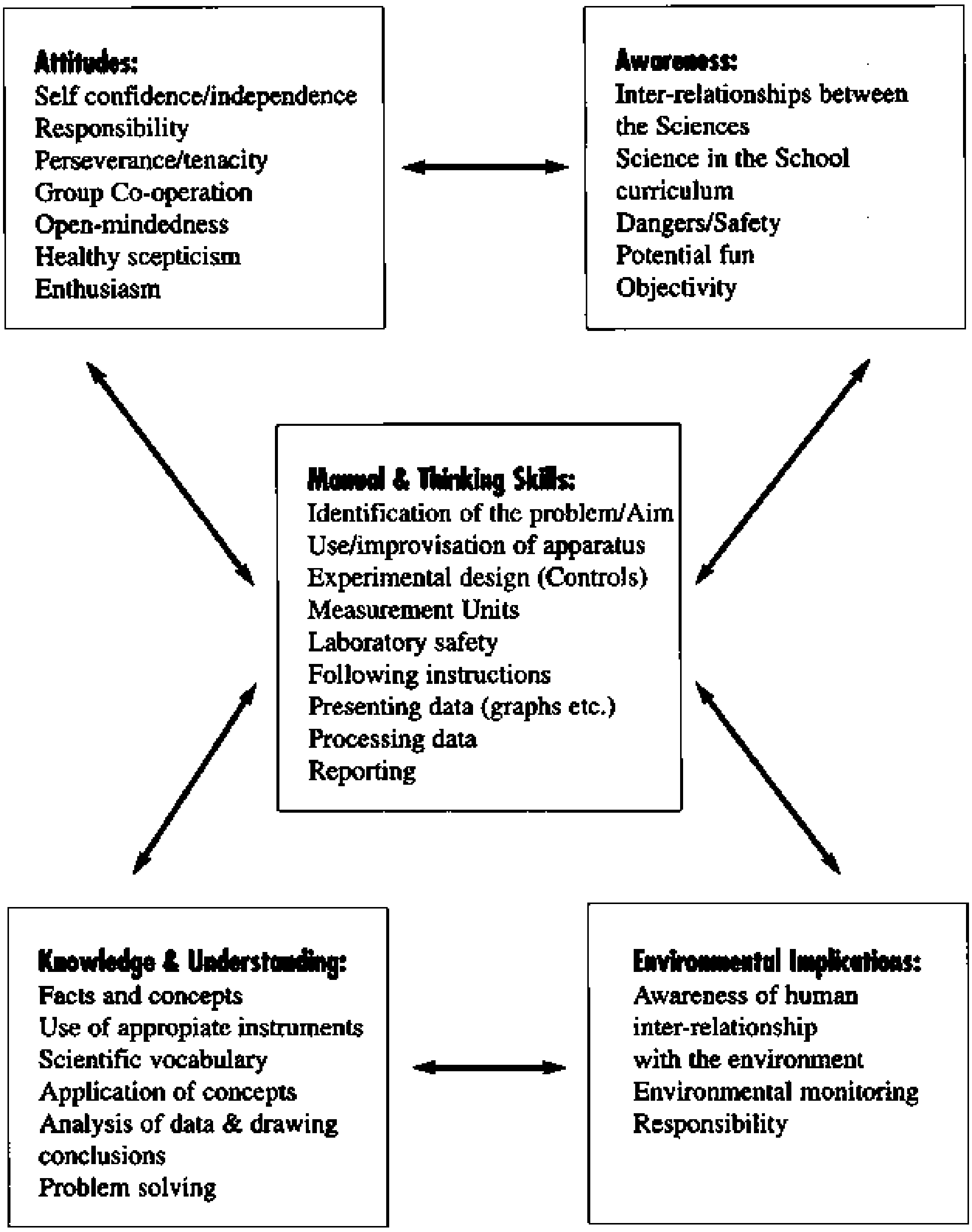

Summary of Inter-Relationships

4. Curriculum Objectives

It is important that the Physical Science and Biology content of this Standard 7 Syllabus should be presented in an integrated manner. To help accomplish this and to make it more meaningful, the syllabus has been re-ordered. Guidance has also been offered as to which thinking, process and manual skills can be used to enhance learning in each area of the syllabus.

The subject content is set out as a combination of the traditional Physics, Chemistry and Biology topics in an attempt to encourage teachers to use a more integrated approach in their teaching of these sciences. This does not mean that parallel teaching by a team of specialist teachers should not occur. Consultation, co-operation and cross-referencing are however recommended.

An explanatory booklet containing exemplars of course content will be made available to all participating schools early in 1994. This document should be read together with the syllabus.

Guidelines to the Examiner & all Teachers

1. The Curriculum Objectives outlined below are designed to provide guidance to as to what will be assessed; they are not meant to limit, in any way, the teaching programme of any particular school.

2. **Only the subject material contained within the first two Columns entitled »Topic Core and Core Extensions« are examinable as regards factual content, in detail.**

3. The »Supplement« section is optional; each teacher may decide whether or not to use material contained within this section. It is included in an attempt to provide guidance to the less experienced teacher. This section is printed in italics.

4. The »Skills & Teaching Suggestions« section in the exemplar booklet is likewise an aid to teachers. This section will, however, play a role in shaping the types of questions the IEB Combined Science Examination will contain. (Refer to the 1993 IEB Combined Science Examination in the IEB Combined Science Exemplar Booklet: available March 1994).

5. This Syllabus will form the basis of the IEB General [Combined] Science Examination. A list of topics to be examined externally by the IEB will be circularised each year.

6. The above-mentioned IEB Combined Science Exemplar Booklet contains:

- The 1993 IEB Combined Science Examination paper & marking memorandum;
- Hints on teaching aspects of the syllabus;
- A list of the thinking, process and manual skills students should be introduced to and ways of devising exercises which incorporate or illustrate these skills;
- Some sample lessons;
- Some sample tests or practical lesson suggestions, sample answers from students and their evaluation.
- This Exemplar Booklet will be upgraded and developed constantly; any teacher who has suitable material which could be included in this booklet, should be encouraged to submit it to:

The Deputy Director - Curriculum Development
Independent Examinations Board
PO Box 875
HIGHLANDS NORTH 2037

3.6.4. Independent Examinations Board. General Science Examination Paper 1995 (General Education Certificate)

EXAMINATION NUMBER ___________________

INDEPENDENT EXAMINATIONS BOARD

GENERAL EDUCATION CERTIFICATE
OCTOBER 1995

GENERAL SCIENCE EXAMINATION

Time: 1 ½ hours 100 marks

PLEASE READ THESE INSTRUCTIONS CAREFULLY

1. **Write your examination number in the space provided at the top of this page.**
2. This paper consists of 22 pages. Please check that your paper is complete.
3. Use the reading time to go through the examination paper carefully.
4. Write clearly and neatly.
5. Answer Questions 1-9 on the answer grid for multiple choice questions on Page 3.
6. Answer Questions 10-20 in the space provided on the question paper.

1-9	
10	
12	
13	
14	
15	
16	
17	
18	
19	
20	
TOTAL	

READ THE INSTRUCTIONS BELOW **BEFORE** YOU ANSWER QUESTIONS 1-9.

Questions 1-9 are MULTIPLE CHOICE questions.

INSTRUCTIONS

1. Read each question through carefully.

For each question, there are FOUR possible answers (A, B, C and D). Three of these answers are WRONG. Only **one** of these answers is CORRECT.

2. Choose which ONE of the four possible answers is correct.

3. Look at the letter (A, B, C or D) next to the CORRECT answer.

4. On the page called ANSWER GRID FOR MULTIPLE CHOICE QUESTIONS (Page 3), find the number of the question. Use a PENCIL to draw a LARGE cross through the LETTER of the answer which you think is correct.

5. You may draw only ONE cross on each line.

Example:

QUESTION 64

Pure water

A is a green solid
B is a liquid
C has a very strong smell
D conducts electricity very well.

The answer to Question 64 is B. Show this on the Answer Sheet as below:

64	A	~~B~~	C	D

ANSWER GRID FOR MULTIPLE CHOICE QUESTIONS

1	A	B	C	D
2	A	B	C	D
3	A	B	C	D
4	A	B	C	D
5	A	B	C	D
6	A	B	C	D
7	A	B	C	D
8	A	B	C	D

QUESTION 1

'AIDS is caused by a virus which can only live in blood, semen, and vaginal fluid.' People can catch AIDS by...

A using the same fork and knife as a person who has AIDS.
B having sex with a person who has AIDS.
C holding hands with a person who has AIDS.
D swimming with a person who has AIDS.

QUESTION 2

Iron sulphide is

A a MIXTURE which has properties of iron and properties of sulphur

B a MIXTURE of iron and sulphur with properties which are NOT the same as the properties of iron and sulphur

C a COMPOUND with the same properties as iron and sulphur

D a COMPOUND with properties very different to the properties of iron and sulphur

(2)

QUESTION 3

Which activity below uses the most glucose?

A

B

C

D

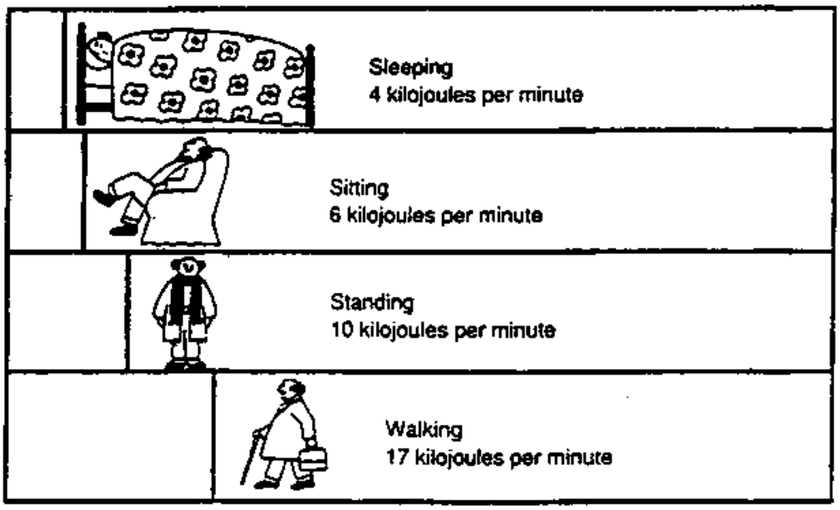

The amount of energy a 65 kg man needs in a minute

(2)

QUESTION 4

The diagram below represents the particles of which a metal teaspoon is made. The diagram shows how the particles are arranged on a very cold day.

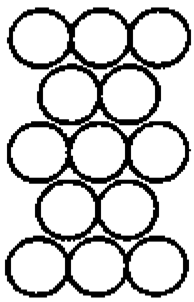

Which of the diagrams below represents the same particles after the teaspoon has been in boiling water for twenty minutes?

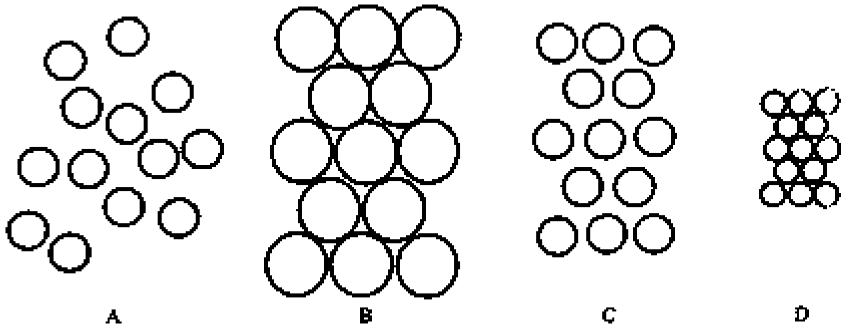

(2)

QUESTION 5

The following diagrams show different systems in the human body. Each system performs a life process. Choose the system that is involved in the transport of oxygen and nutrients throughout the body.

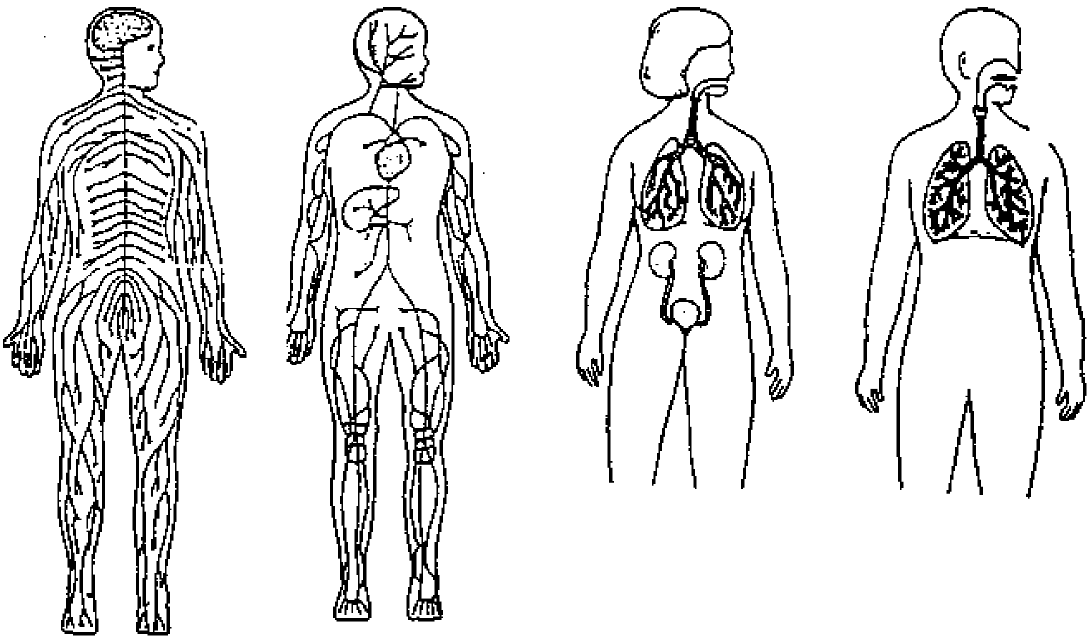

nerve system A

blood system B

excretory system C

breathing system D

(2)

QUESTION 6

We inhale and exhale air all the time.

Choose the correct answer from the choices below.

A Exhaled air contains less oxygen and less carbon-dioxide than inhaled air.
B Exhaled air contains less oxygen and more carbon-dioxide than inhaled air.
C Inhaled air contains less oxygen and more carbon-dioxide than exhaled air.
D Exhaled air contains more oxygen and more carbon-dioxide than inhaled air.

(2)

QUESTIONS 7 AND 8 BOTH REFER TO THE DRAWING PIN IN DIAGRAM 7.

QUESTION 7

The area of the head of a drawing pin is 100 times bigger than the area of the point of the drawing pin.

A boy presses the drawing pin onto a piece of wood with a force of 15 N as shown below:

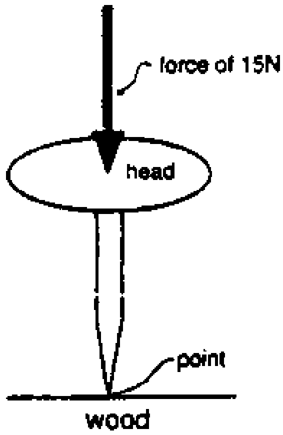

DIAGRAM 7

What force does the point of the drawing pin exert on the wood?

A 15 N
B 100 x 15 N
C $\frac{15\,N}{100}$
D The point exerts no force on the wood.

(2)

QUESTION 8

The statements below are about the **pressure** acting on the head of the drawing pin and the **pressure** acting at the point of the pin.

Which statement is correct?

A The pressure acting on the head of the pin is the same as the pressure acting at the point of the pin.
B The pressure acting at the point of the pin is greater than the pressure acting on the head of the pin.
C The pressure acting at the point of the pin is smaller than the pressure acting on the head of the pin.
D It is impossible to compare these pressures because the question does not give the area of the head or the area of the point of the pin.

(2)

QUESTION 9

The picture below represents a **closed** container in which there are particles of the gas oxygen at room temperature.

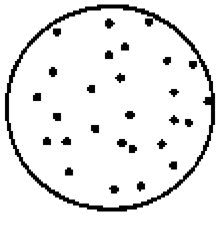

Which of the diagrams below shows the arrangement of the same oxygen particles when we make the gas very cold? **(The oxygen does NOT turn into a liquid when we cool it.)**

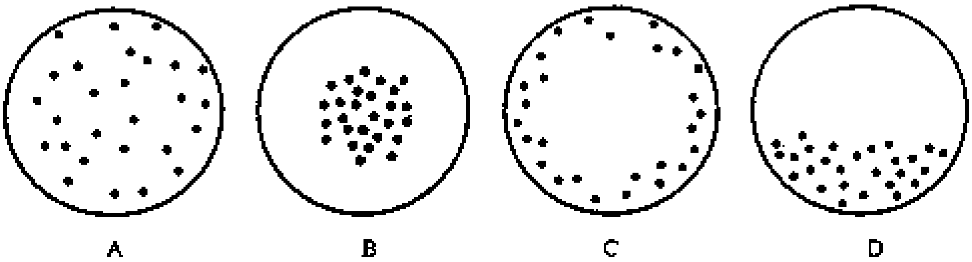

(2)

18 marks

PLEASE ANSWER QUESTIONS 10-20 IN THE SPACES PROVIDED ON THE QUESTION PAPER.

QUESTION 10

Nitrogen reacts with hydrogen to form ammonia. Nitrogen, hydrogen and ammonia are gases at room temperature.

Diagram 10 below represents the particles of these three gases - nitrogen, hydrogen and ammonia.

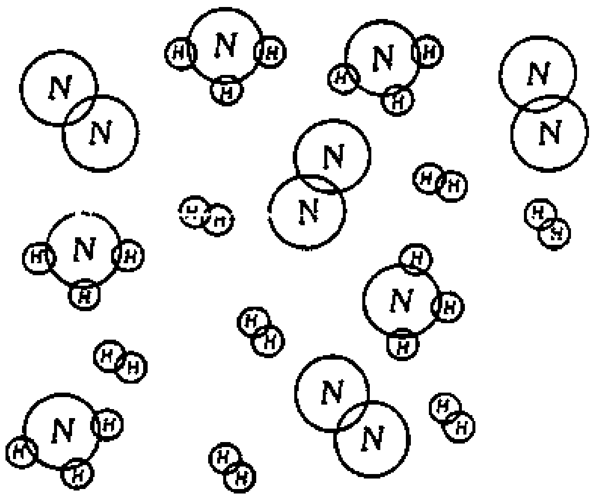

DIAGRAM 10

Use Diagram 10 to help you answer the questions below:

10.1 Is nitrogen an element or a compound?

____________________________________ (1)

10.2 Is ammonia an element or a compound?

____________________________________ (1)

10.3 Are the particles of nitrogen gas in Diagram 10 atoms or molecules?

____________________________________ (1)

10.4 Write the chemical formula for ammonia gas.

____________________________________ (2)

10.5 How many atoms of hydrogen are there in 6 molecules of ammonia?

____________________________________ (2)

10.6 Write the formula for 4 molecules of hydrogen gas.

____________________________________ (2)

9 marks

QUESTION 11

Look at Diagram 11 below.

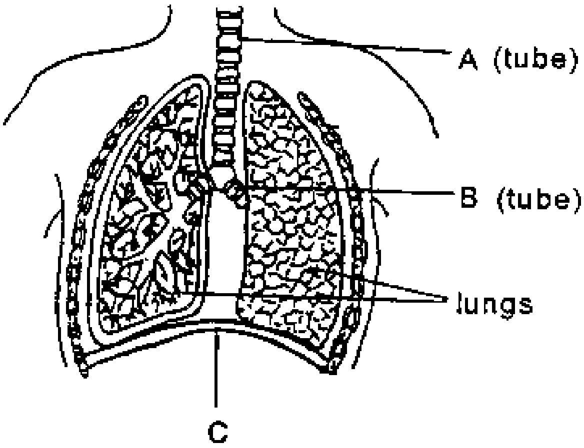

DIAGRAM 11

11.1 Give a label for each of the following structures:
A ____
B ____ (2)

11.2 Which letter points to a muscle? __________________________ (1)

11.3 Cross out the WRONG word or words in the following statements.
11.3.1 When C moves downwards, the volume of the chest cavity increases/decreases/stays the same. (1)
11.3.2 When C moves downwards, the air pressure inside the lungs increases/decreases/stays the same. (1)

5 marks

QUESTION 12

Diagram 12 below shows a long piece of wood (AB) with its one end (B). on the back of a truck.

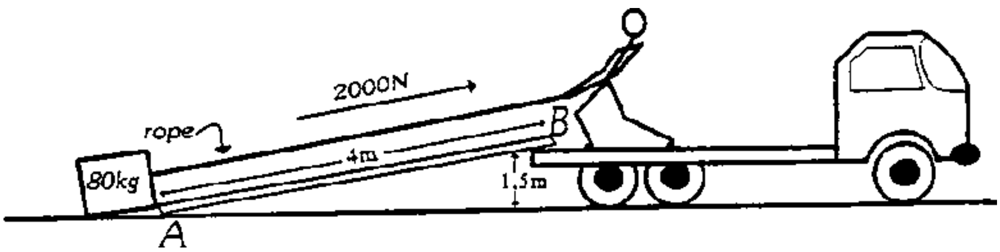

DIAGRAM 12

Allan uses a rope to pull a concrete block (of mass 80 kg) up the piece of wood onto the back of the truck. Allan pulls on the rope with a constant force of 2 000 N. The plank is 4m long. The back of the truck is 1,5m high.

12.1 How much **work** does Allan do to pull the block along the plank onto the truck? Use the formula

work = force x distance. (6)

____
____
____

12.2 Work out the weight of the concrete block.

(2)

____
____

8 marks

QUESTION 13

Diagram 13 below represents the human female reproductive system

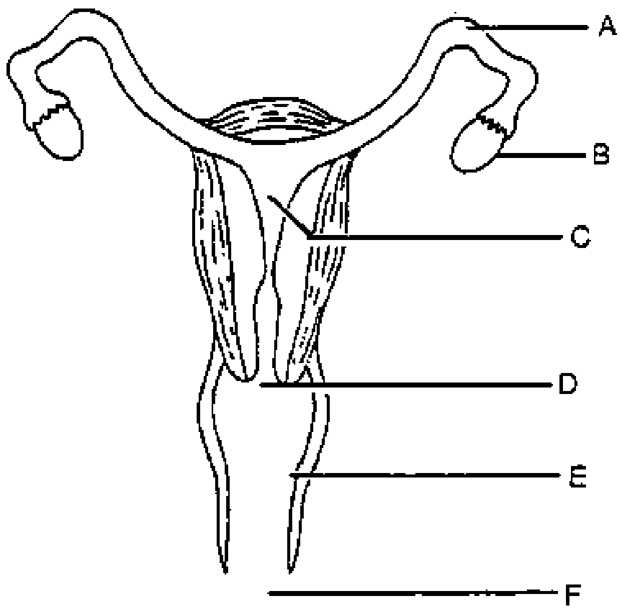

DIAGRAM 13

13.1 Match each statement in Column B to the correct word in Column A. Write the **number** of the correct statement in the space provided in Column A.

COLUMN A		COLUMN B
______CERVIX	1	The birth canal.
______VAGINA	2	The muscle which controls the opening of the womb.
______OVIDUCT	3	The organ in which eggs are made.
______OVARY	4	The place where fertilisation occurs.

(4)

13.2 Where should the contraceptive devices listed below be placed to prevent pregnancy? Use letters from Diagram 13 to answer.

IUD ______________
DIAPHRAGM ______________

(2)

6 marks

QUESTION 14

An engineer puts a long steel beam (XY) on top of two concrete pillars as in Diagram 14.1 below.

DIAGRAM 14.1

The engineer wants to find out how much the beam (XY) will bend (sag) when he hangs loads of different weight on the beam.

He hangs a load of known weight on the beam. He measures the sag (h) of the beam as shown in DIAGRAM 14.2 below.

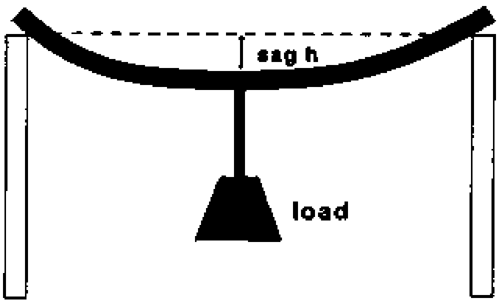

DIAGRAM 14.2

He measures the sag (h) for six different loads. He uses his results to plot a graph of Sag (in cm) on the y-axis against the Load (in N) on the x-axis. His graph is shown in Diagram 14.3.

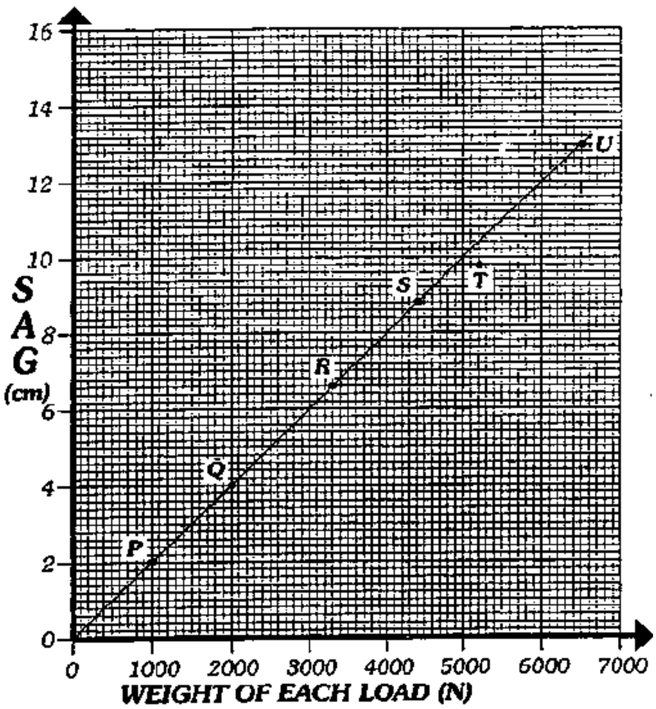

DIAGRAM 14.3

USE INFORMATION FROM THE GRAPH DIAGRAM 14.3 TO ANSWER THE QUESTIONS BELOW:

14.1 What is the weight (in N) of the load which will make the beam (XY) sag

(a) 4 cm? ____ (1)

(b) 7 cm? ____ (2)

14.2 How much (in cm) will the beam XY sag when a load of 4400 N hangs from its centre?

____ (2)

14.3 The engineer made a mistake when he measured how much beam (XY) sags with a load of 5200 N.

How much **should** beam XY sag when a load of 5200 N hangs from its centre?

____ (2)

14.4 The engineer tests another steel beam PQ. He puts the ends of PQ on top of two concrete pillars. PQ IS MUCH LONGER THAN XY, but it is the SAME thickness as XY. Will PQ sag more or less than XY under the same load?

____ (1)

8 marks

QUESTION 15

Use Diagram 15 to answer the questions below.

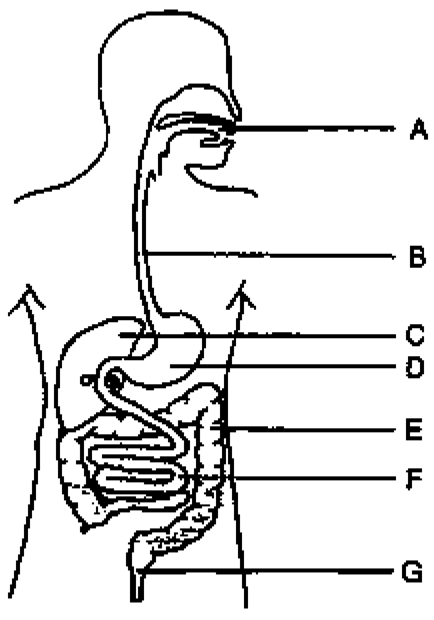

DIAGRAM 15

15.1 State **two places where** mechanical digestion takes place. (Use letters only)

____

____________________ (2)

15.2

15.2.1 Is digestive juice in D acid or alkaline?

____ (1)

15.2.2 What indicator could you use to check your answer to 15.2.1?

____ (1)

4 marks

QUESTION 16

In the space below draw and label a diagram of a cell from the human body eg. a cheek cell.

5 marks

QUESTION 17

When we push an object, we MAY do work on the object.

Table 17, on page 18 shows some things which may happen. In the table these things are called ACTIONS.

Read through Table 17 very carefully. For each ACTION (A, B, C and D), decide if work is done or if work is NOT being done. Fill in either YES or NO in the second column in TABLE 17.

17.1

	ACTION	IS WORK BEING DONE? Fill in YES or NO.
A	Fred pushes the wall as hard as he can. The wall does NOT move.	Does Fred do work on the wall? ______________________
B	Mary carries 6 very heavy books from the ground floor of a building up to the tenth floor of the building.	Does Mary do work on the books? ______________________
C	Four very strong poles hold up the roof of a house. The roof does NOT fall down.	Do the poles do work on the roof? ______________________
D	A ball falls towards the ground from a height of 1m.	Is work being done on the ball as it falls? ______________________

TABLE 17

(4)

17.2 Explain your answer to C in TABLE 17. Use words, 'distance', 'force' and 'work' in your explanation.

(3)

____
____
____
____

17.3 What kind of energy does the ball in D in Table 17 gain as it falls?

(1)

____

17.4 What kind of energy does the ball in D in Table 17 lose as it falls?

(1)

____

9 marks

QUESTION 18

Diagram 18.1 below shows some of the parts inside Mary's torch.

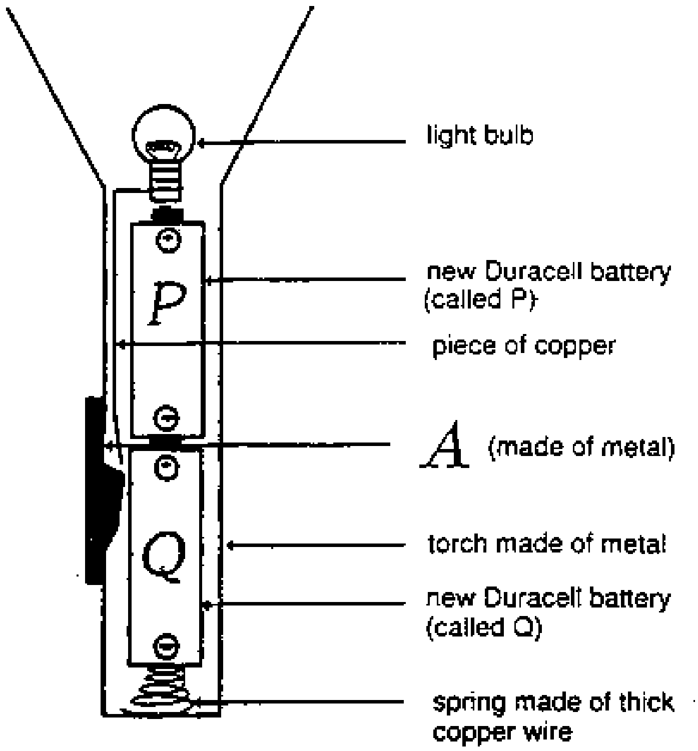

DIAGRAM 18.1

18.1 What will **happen** to the bulb in Mary's torch when she pushes A (in Diagram 18.1) **up?**

____ (1)

18.2 Draw an electrical circuit diagram to show EXACTLY how the parts in MARY'S TORCH in Diagram 18.1 are joined to each other. You MUST use the correct electrical symbols and you must put the following labels on your circuit diagram: Battery P, battery Q and part A. Label the + and - terminals on the Duracell batteries. The bulb in your circuit diagram must be turned off.

(6)

18.3 Marietjie has a new torch bulb and a new Duracell battery. She presses the bottom of the bulb hard against the bottom of the Duracell battery and holds it as shown in Diagram 18.3 below.

DIAGRAM 18.3

Marietjie's bulb does NOT light.

Draw a piece of copper wire in Diagram 18.3 which will make the bulb light. (2)

18.4 Tom has two light bulbs Bulb X and Bulb Y. Bulb X, has a thin filament. Bulb Y has a thick filament. The thick filament and the thin filament are the same length. See Diagram 18.4.

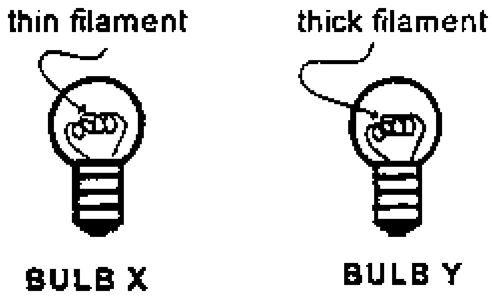

DIAGRAM 18.4

(a) Which bulb will carry more current if we put it into Mary's torch in Diagram 18.1?

Answer by writing Bulb X or Bulb Y.

____ (1).

(b) Explain your answer to 18.4 (a).

____
____
____ (2)

12 marks

QUESTION 19

Diagram 19 below shows the relative amounts of different nutrients in some common foods. The numbers alongside each bar are the percentages of each nutrient.

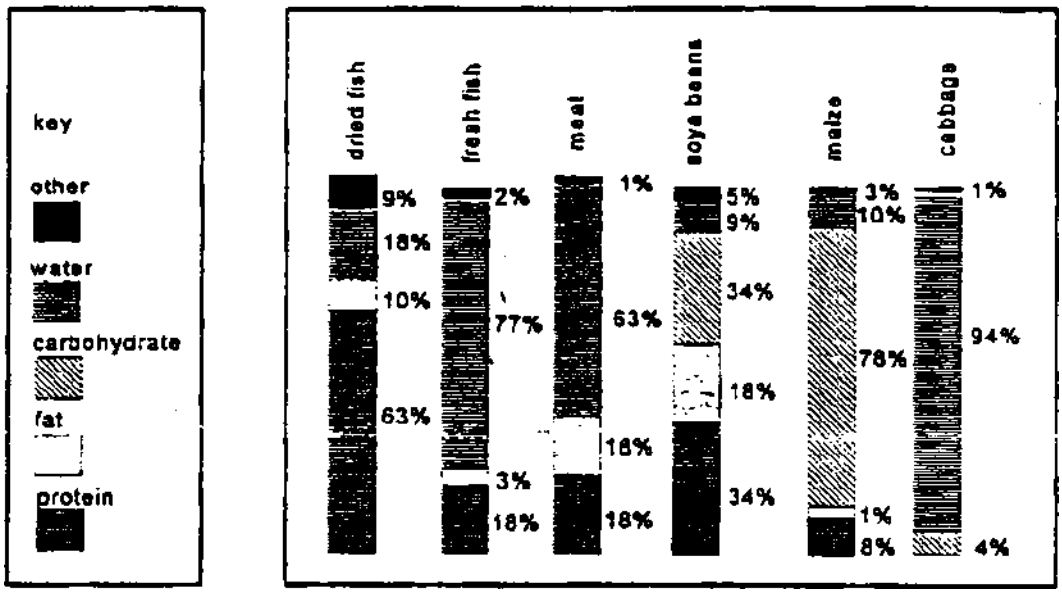

Diagram 19

19.1 Which food contains the highest percentage of carbohydrate?

____ (1)

19.2 Why does the body need carbohydrates?

____ (1)

19.3 Which food contains the lowest percentage of water?

____ (1)

19.4 Which food would you recommend for a child suffering from Kwashiorkor?

____ (1)

19.5

19.5.1 Which one of the above foods has the best balance of nutrients?

____ (1)

19.5.2 Explain how you made your choice in 19.5.1.

____ (2)

7 marks

QUESTION 20

Below is a diagram to show a leaf that has been cut in cross-section and is being looked at under a microscope.

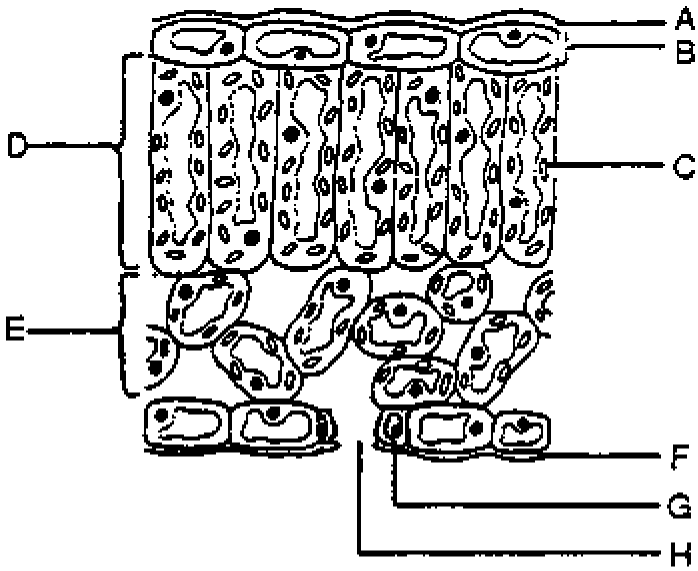

DIAGRAM 20

20.1 The leaf is an organ of a plant. It is made up of many different tissues. Choose TWO letters from the diagram that show two different kinds of tissues.

______ ______ (2)

20.2

20.2.1 Write down the letter of the tissue whose main function is photosynthesis.

______ (1)

20.2.2 Use information from Diagram 20 to explain how you made your choice in 20.2.1.

____
____
____ (3)

20.3 State the function of H.________________________________
____ (2)

20.4 What is the substance made in C, which turns iodine solution blue-black. (1)

____

9 marks

3.6.5. Independent Examinations Board. Combined Science Examination Paper 1993 (Standard 7 Examination)

INDEPENDENT EXAMINATIONS BOARD

STANDARD 7 EXAMINATION
SEPTEMBER 1993

COMBINED SCIENCE EXAMINATION

Time: 1¼ Hours 75 marks

PLEASE READ THESE INSTRUCTIONS CAREFULLY

1. Number your answers exactly as the questions are numbered.

2. It is in your interests to write legibly and to present your work neatly.

3. This examination consists of 2 sections:

Section A: **'Lucky Dip'** (40 marks)
Section B: **'The Air Around Us'** (35 marks)

4. **Answer ALL questions in both sections in the BLUE BOOKLET.**

5. This paper has been planned so that about one minute should be spent on each mark earned e.g. about 5 minutes should be spent on a question worth 5 marks.

6. This paper consists of 24 pages: a white booklet (pages 1-11); and a blue booklet (pages 12-24). Please check that both booklets are complete.

SECTION A: "LUCKY-DIP" (40 marks)

Answer all questions in this section on the special answer sheet in the blue booklet.

Questions 1 to 11 are all Multiple Choice Questions; just mark the appropriate letter (A, B, C or D) on the Answer Sheet, with a clear cross.

1. The diagram below represents water coming from 2 holes in a water pipe on a day with **NO wind blowing.**

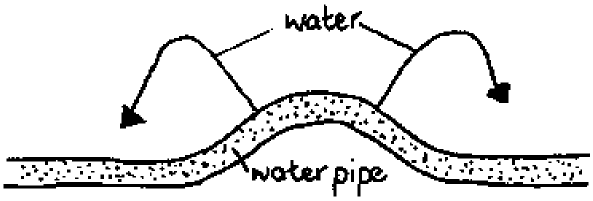

Now the wind blows in the direction that the arrows show. Choose the diagram which best shows how the water will move:

A
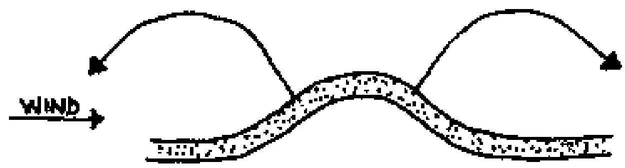

B
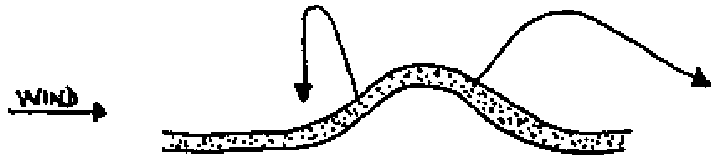

C
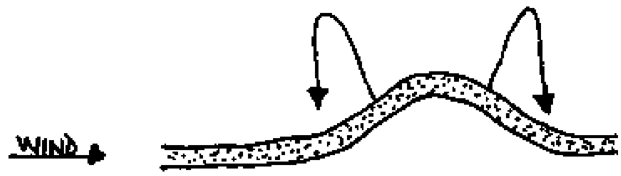

D
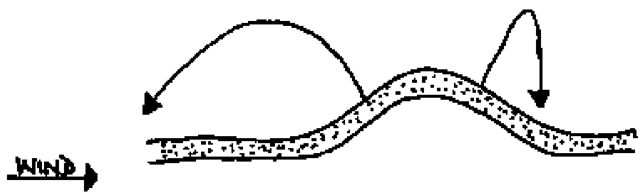

2. Four (4) children were playing on a see-saw and wanted to see who was the heaviest.

The diagrams below show what happened when they were sitting still:

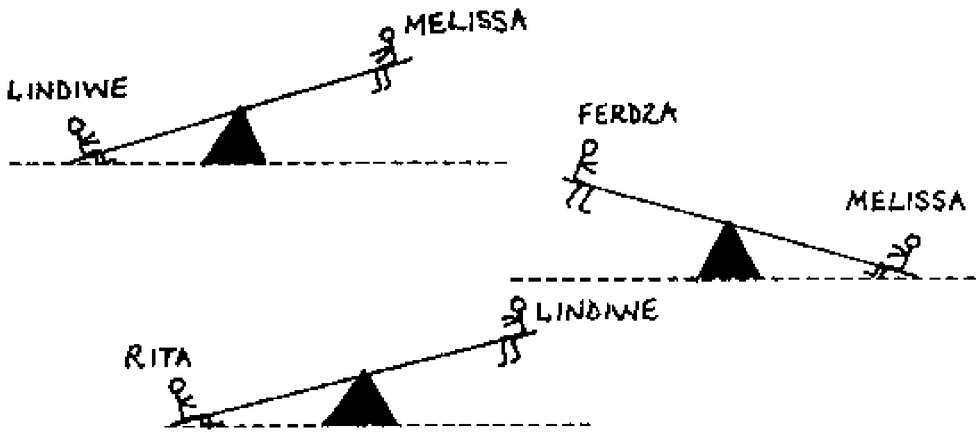

Which child was the heaviest?

A - Rita
B - Melissa
C - Lindiwe
D - Ferdza

(2)

3. A group of animals was feeding together on the farm; they were then disturbed and this is a sketch of the tracks in the sand they left:

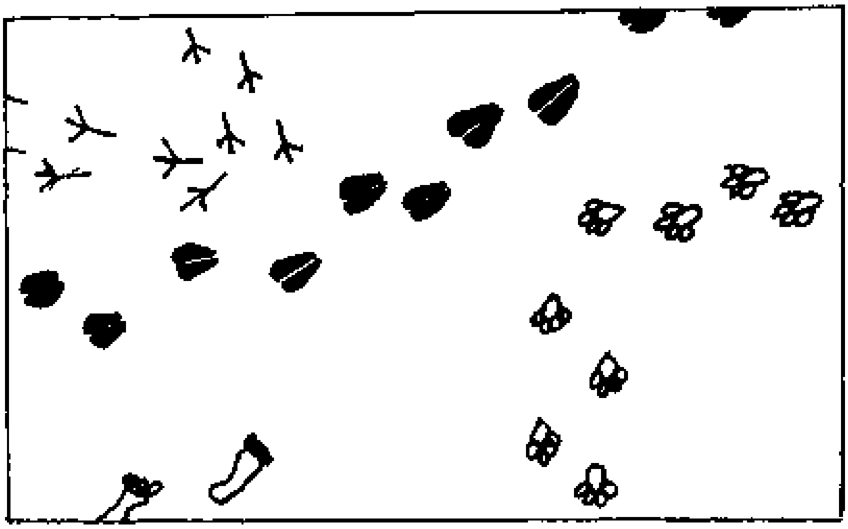

Which were the animals which produced the tracks above?

A - Hen, Cow, Elephant and Human
B - Human, Hen, Dog and Cow
C - Dog, Cow, Lion and Pigeon
D - Horse, Cow, Dog and Hen.

(2)

4. The reading on ammeter X is 1,8 A. What is the reading on ammeter Y?

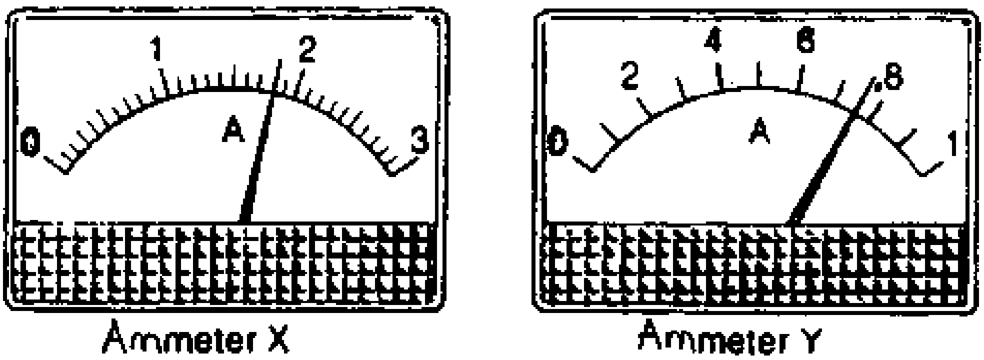

A - 6,75 A
B - 7,6 A
C - 0,72 A
D - 0,76 A

(2)

5. You put the stone in the jug of water. This makes the water rise to the 500ml mark. What is the **volume** of the stone? Choose A, B, C or D.

A - 160 g
B - 340 ml
C- 160 ml
D - 500 g

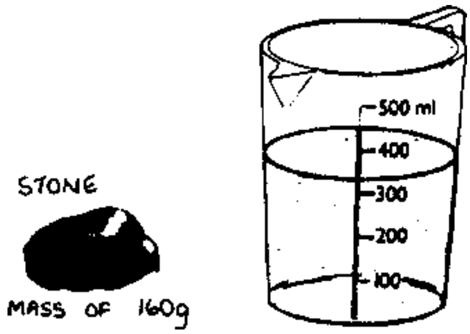

(2)

6. What is the length of the leaf?

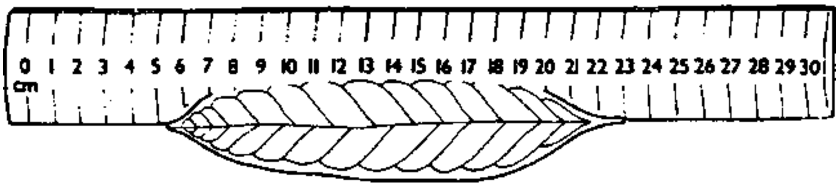

A - 23 cm
B - 17,7 cm
C - 16,4 cm
D - 21,5 cm

(2)

7. What is the temperature of the water?

A - 49° C
B - 41° C
C - 40° C
D - 39° C

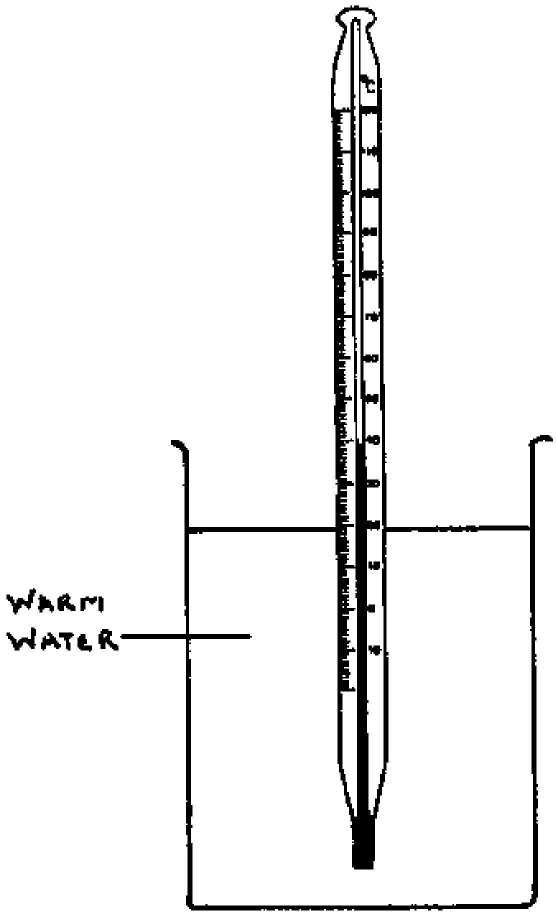

(2)

8. The table below gives the nutrients present in 100g of various foods:

FOOD:	NUMBER OF GRAMS OF NUTRIENTS IN 100g OF THAT FOOD		
	CARBOHYDRATES	PROTEIN	FAT
Wholemeal Bread:	46	10	3
Boiled Potatoes:	20	2	0
Potato Chips:	40	4	9
White Bread:	55	9	2

The following graph shows the differing amounts of the nutrients found in one of the foods; **which food does the graph represent?**

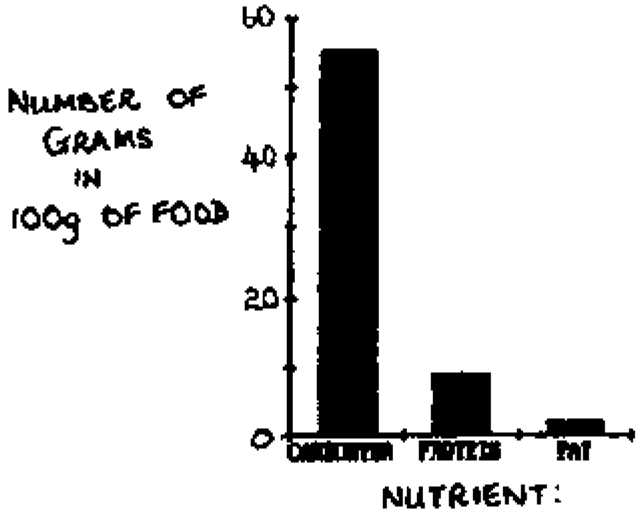

A - Wholemeal Bread
B - Boiled Potatoes
C - Potato Chips
D - White Bread

(2)

9. The table below shows some South African indigenous (natural) plants and it shows the months in which these plants produce flowers:

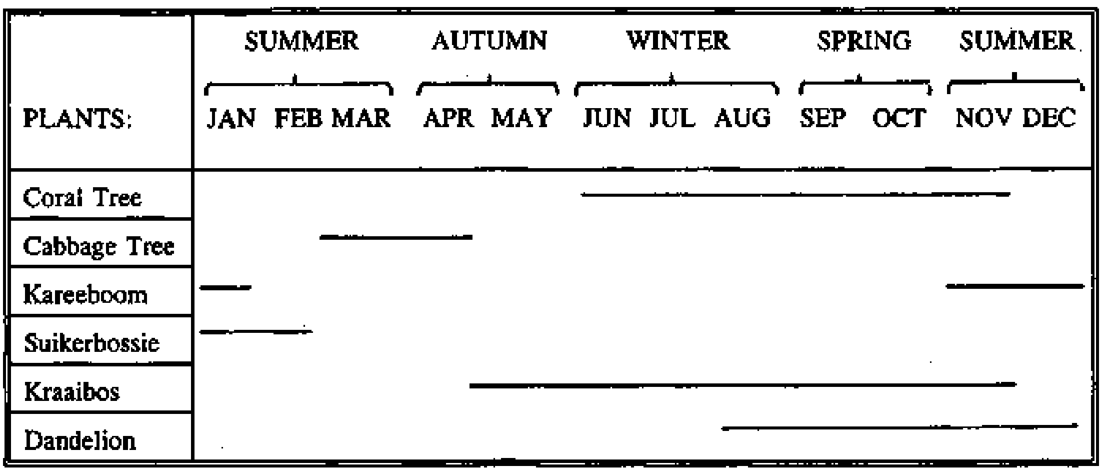

NOW ANSWER THESE QUESTIONS:

9. Which plant has flowers the longest?

A - Kareeboom
B - Suikerbossie
C - Dandelion
D - Kraaibos

(2)

10. Look at the plant you chose in your answer to (9) above. For how long does it produce flowers?

A - 7 months
B - 6 months
C - 8 months
D - 5 months

(2)

11. Which season has the most plants producing flowers?

A - Spring
B - Summer
C - Autumn
D - Winter

(2)

22 Marks

Questions 12 and 13 are to be answered in the blue booklet; use the lines and graph provided.

12. Study the following diagram and pictures, and answer the questions which follow:

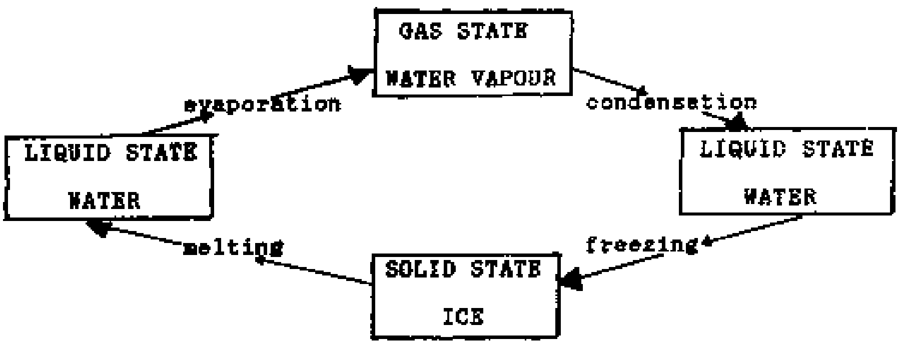

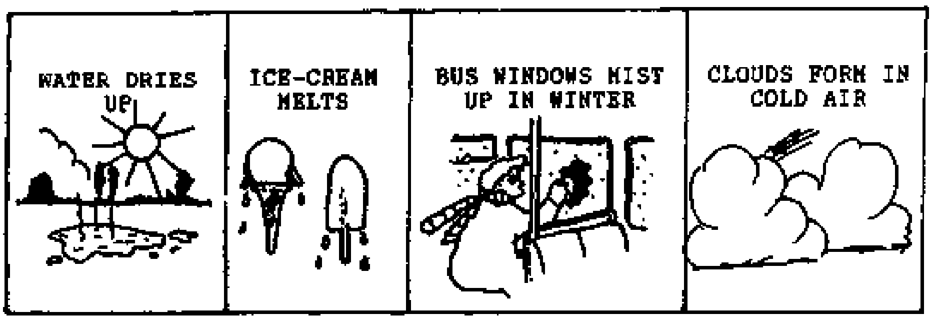

12.1 Name the phase change (evaporation, melting, condensation or freezing) for each of the 4 diagrams.

(4)

12.2 Give 2 more examples of substances changing phase.

(2)

13. Study the picture of Mount Kenya and the table of information below. Then answer Question 13.1 to 13.5.

This picture shows Mount Kenya. Altitudes have been drawn on the picture. (Altitude means the height above sea level)

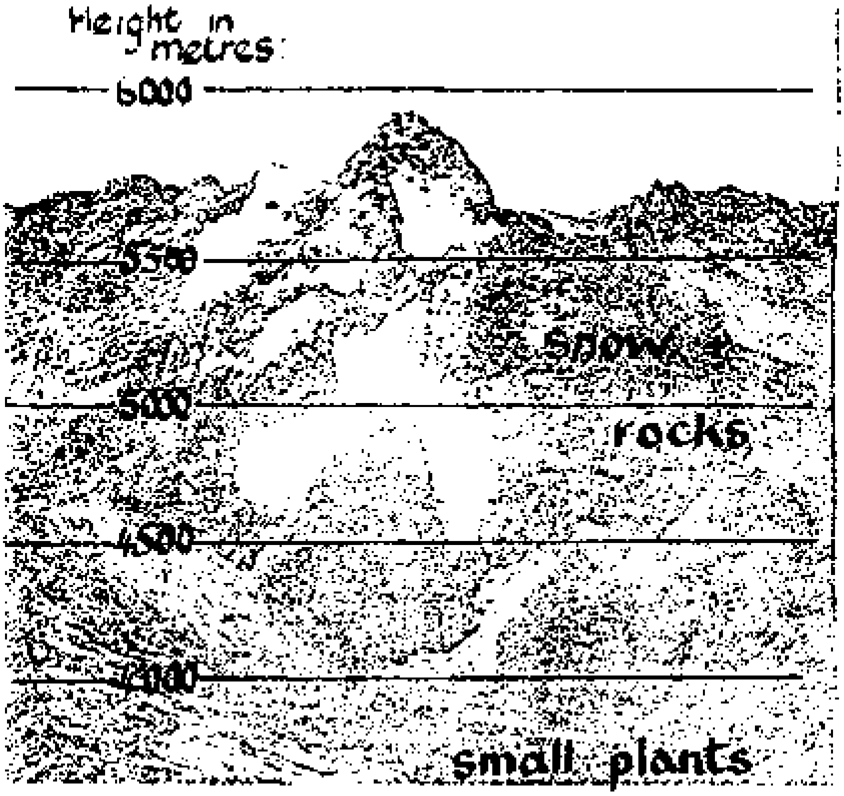

Mount Kenya

Height above Sea Level:	Boiling Temperature of Water:	Atmospheric Pressure:
6000 m	80° C	47 kPa
4000 m	88° C	60 kPa
2000 m	93° C	77 kPa
Sea Level	100° C	100 kPa

13.1 To boil an egg very hard, the temperature of the boiling water must be higher than 88° C; if mountain climbers find that they cannot boil eggs hard, at what height would they be?

(1)

13.2 How high is the mountain? Look at the picture and give the most accurate answer you can.

(1)

13.3 Why would a mountain climber have difficulty breathing when he gets to the top of Mount Kenya?

(3)

(Support your answer by mentioning one observation from the picture of Mount Kenya).

13.4 Use the data from the table above to draw a graph (on the graph paper in the blue booklet) comparing Altitude and Boiling temperature of water.

(5)

Decide on a heading for this graph and write it on the line provided.

(1)

13.5 Use your graph to work out what the boiling temperature of water would be at 3000 metres (height above sea level). (Write your answer in the space provided in the blue booklet).

(1)

TOTAL MARKS FOR SECTION A: 40 Marks

Examination No. ____________________

STANDARD 7 COMBINED SCIENCE EXAMINATION
SEPTEMBER 1993

ANSWER SHEET FOR SECTION A

Mark the appropriate letter with a cross

Question 1	**A**	**B**	**C**	**D**
Question 2	**A**	**B**	**C**	**D**
Question 3	**A**	**B**	**C**	**D**
Question 4	**A**	**B**	**C**	**D**
Question 5	**A**	**B**	**C**	**D**
Question 6	**A**	**B**	**C**	**D**
Question 7	**A**	**B**	**C**	**D**
Question 8	**A**	**B**	**C**	**D**
Question 9	**A**	**B**	**C**	**D**
Question 10	**A**	**B**	**C**	**D**
Question 11	**A**	**B**	**C**	**D**

(11 X 2 = 22 marks)

QUESTION 12

12.1

a. Water dries up:____
b. Ice cream melts:____
c. Bus windows mist up:____
d. Clouds form:____

(4)

12.2 ____
____
____

QUESTION 13

13.1 ____

(1)

13.2 ____

(1)

13.3 ____

(3)

13.4

Heading for graph:____ (1)

(5)

13.5 Boiling temperature of water at 3000m is about _____________________

(1)

SECTION B: "THE AIR AROUND US" (35 marks)

Answer this section on the lines (and in the spaces) provided on this Question Paper.

READ THE FOLLOWING INFORMATION CAREFULLY AND THEN ANSWER THE QUESTIONS WHICH FOLLOW:

The following pie chart show the gases which make up "clean air" in our Earth's Atmosphere:

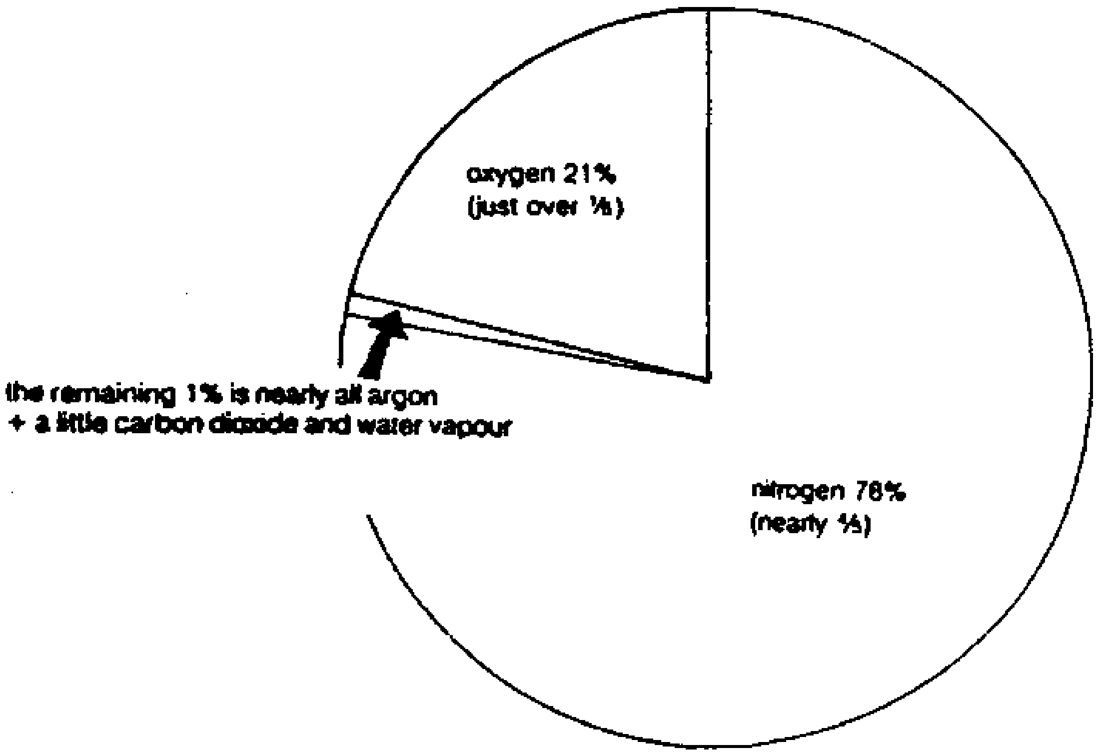

Sadly, much of the air we breathe in is **not** clean; it contains poisonous substances which we call **POLLUTANTS.**

Where do the pollutants come from? They come from factories, power stations and cars. In the past 100 years, all countries have become more industrialised. There are more factories and power stations which burn coal and oil. There are more and more cars on the roads; cars burn petrol and blow out waste gases into the air. The countries of the world burn almost a billion tonnes of coal, oil and gas each year.

NOW ANSWER THESE QUESTIONS:

1. Scientists believe that gases are made up of tiny particles which we cannot see with our eyes; try to imagine what gases look like if **you could** see these tiny particles - **they would look something like this:**

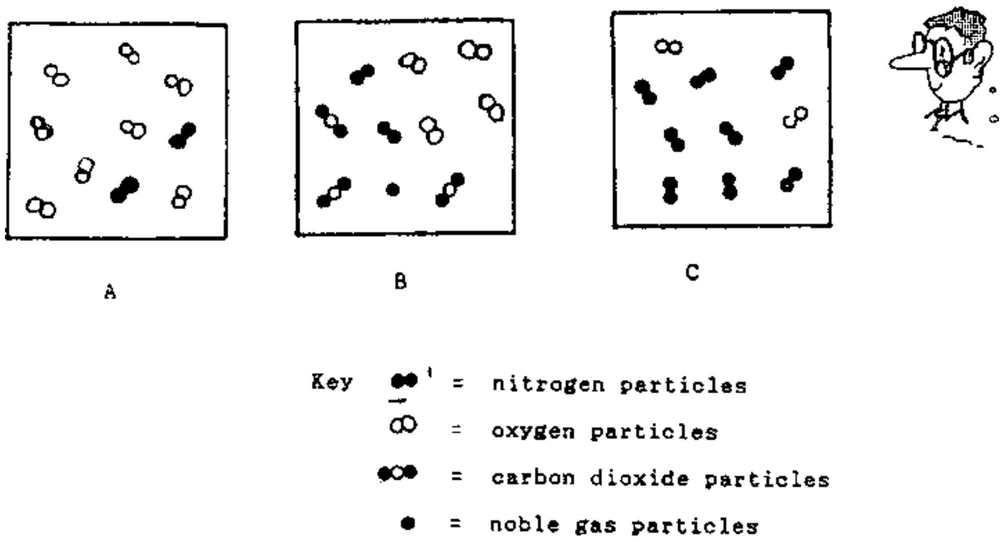

1.1 Which of the pictures above would best represent a small quantity of CLEAN AIR. (A, B OR C)?

____

(1)

1.2 Explain fully why you chose the above picture to represent clean air.

____
____
____

(3)

1.3 What does the word "**POLLUTANT**" mean?

____
____

(1)

1.4 Explain why atmospheric pollution has increased over the years

____
____
____

(2)

7 Marks

2. Study the following diagram. The diagram summarises the effects of acid rain:

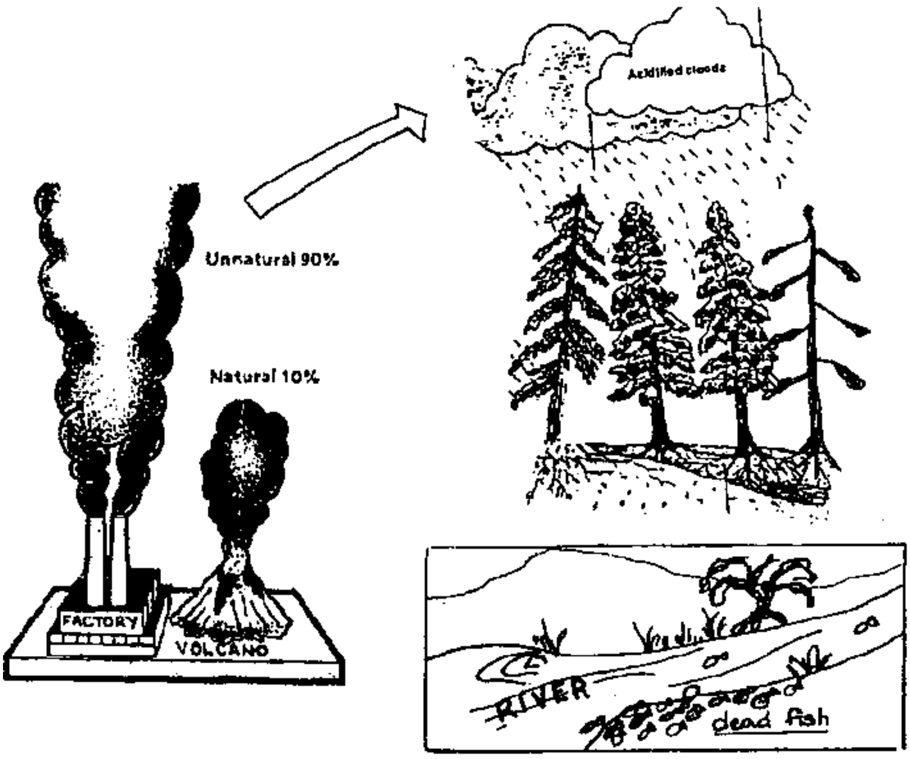

Acid Rain

In nature, volcanoes and lightning form sulphur dioxide and nitrogen oxide gases. Factories produce 9 times more sulphur dioxide and nitrogen oxide gases than nature produces. Nitrogen oxide and sulphur dioxide gases rise into the air. When they meet the moist air, the gases dissolve to produce sulphuric and nitric acids. The clouds become strongly acidified and these clouds produce acid rain.

QUESTIONS:

2.1 State two problems caused by acid rain which are shown on the diagram on page 16.

____

____

(2)

2.2 Where does the acid rain come from? What are its major sources?

____

____

(2)

2.3 Name two oxides that cause acid rain:

____

(2)

6 Marks

3. Some people think acid rain stops seeds germinating, but other people disagree. An experiment is a fair way to test an idea. You have been asked by your teacher to design a good experiment to investigate the effects of acid rain on the germination/growth of seeds. You can only use the apparatus and materials given below:

2 saucers/small dishes
cotton wool
tap water
an acid solution
a measuring cylinder
a packet of carrot seeds

3.1 Describe step by step the method you would use in doing this experiment:

____

____

____

____

____

____

____

____

____

(5)

3.2 Some students did a similar experiment with carrot seeds. They found that fewer seeds germinated in the acid solution than in the water. The following are some of the conclusions different students reached:

A. Acid rain affects the germination of all plant seeds.
B. Acid rain affects the germination of carrot seeds only.
C. The acid used in this experiment affected the germination of carrot seeds. Similarly, acid rain would affect the germination of carrot seeds.

3.2.1 Which one of these conclusions do you think is the best one?

____

(1)

3.2.2 Explain why you chose the above conclusion.

____
____
____
____
____
____

(3)

9 Marks

4. "AIR POLLUTION IS A BIG CHILD-KILLER"

Air pollution is a big factor in the deaths of many South African children under the age of five, claims the Medical Research Council.

Dr Von Schirnding, one of their researchers, said that:

"Outdoor pollution levels in Soweto, when last monitored in 1986, were found to be higher than the internationally acceptable standard and it is likely that the problem had worsened since."

She added that the domestic consumption of coal in Soweto remains high and that children in homes where coal stoves are used are inhaling sulphur dioxide and coal dust particles which could be damaging their health.

(Extract from an article printed in the Star, 22/8/1990)

Having read the above article, a group of students at the Lilian Ngoyi Secondary School decided to carry out a survey about the effects of air pollution on children in their own area.

The school is in Tembisa, a large township on the East Rand, close to an industrial area with many chemical factories.

The table below shows the results of their study:

POLLUTION FACTOR: This tells you how serious the air pollution is (e.g. Factor 1 - not too dirty; Factor 10 - very dirty)

Month:	Jan	Feb	Mar	Apr	May	June	July	Aug	Sept	Oct	Nov	Dec
Pollution Factor	3	3	3	4	7	9	9	10	8	5	4	2
Number of children with lung sickness	4000	4000	9000	10000	20000	25000	25000	30000	25000	12000	7000	3000

QUESTIONS

4.1 A hypothesis is an **idea or test question** which we can check scientifically. Suggest an hypothesis which could have been made by the students at the start of their research.

____

____

(2)

4.2 Using data from the table on the previous page complete the following ar graph (3)

[**Note:** This is 2 graphs; the Bar Graph shows how serious the pollution factor is. The line graph has been drawn on top of the Bar Graph - this shows how many children had lung sickness].

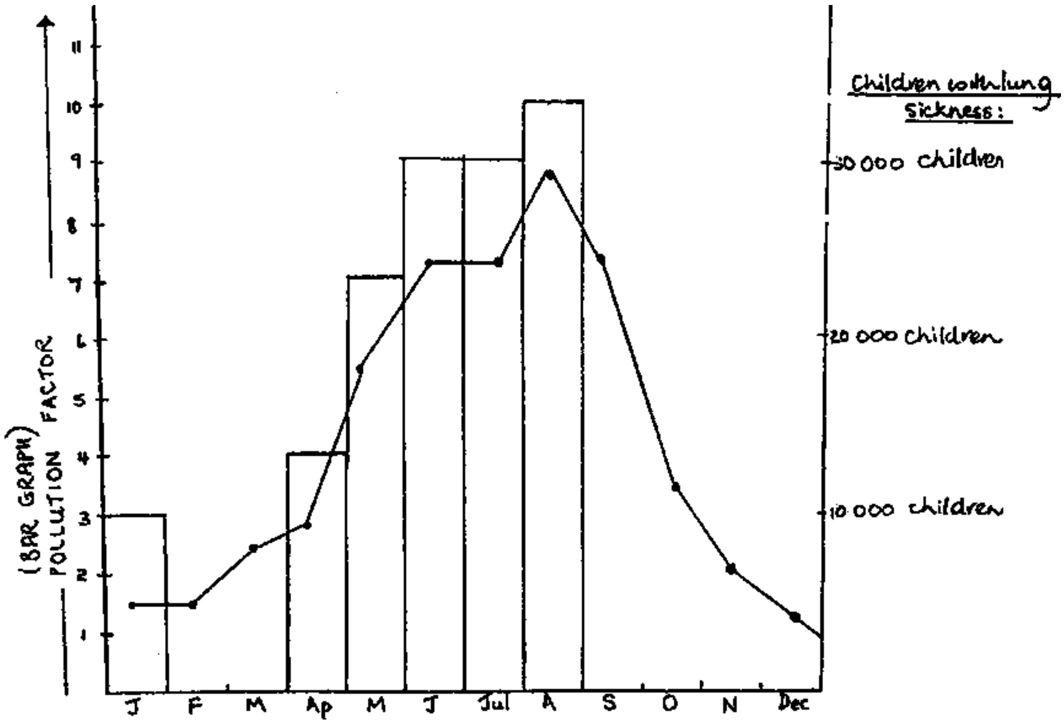

ATMOSPHERIC POLLUTION FACTOR IN TEMBISA IN 1991 (bar graph) associated with CHILDREN WITH LUNG SICKNESS (line graph)

4.3 Which month has the highest pollution factor?

____

(1)

4.4 Can you suggest a reason for the increased pollution factor during those months you named above?

____

____

(1)

4.5 If 50 000 children live in Tembisa, using data from the table of results, calculate the % of children with lung sickness when the pollution factor was 10.

ANSWER:____

(2)

CALCULATION: ____

5. The following are diagrams of air tubes found in children's lungs:

A

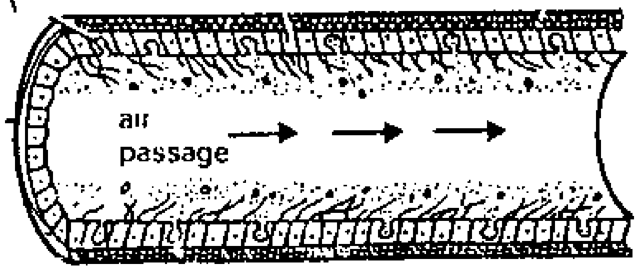

B

This is how air tubes look when they have been cut open (dissected) - they are much smaller than shown in these pictures!

5.1 Complete the following table by writing in the main differences between the two tubes.

(2)

Air Tubes	Tube A	Tube B
Difference 1		
Difference 2		

5.2 Which of the above tubes (A or B) belongs to the sick child?

____

(1)

6. Suggest a way in which the pollution problems affecting the health of the children of Tembisa can be solved or improved.

____
____
____
____

(1)

TOTAL MARKS FOR SECTION B: 35 Marks

3.7. Swaziland

3.7.1. Overview

End of Primary School Examination

1.	**Title of examination:**	Swaziland Primary Certificate (SPC)
2.	**Amount of fees charged:**	≈ US$ 10
3.	**Examination after years in primary school (6, 7, 8 years):**	7 yrs
4.	**Children's entry age in primary school:**	6 yrs
5.	**Number of pupils sitting examination in 1994:**	17,888
6.	**Examination subjects offered:**	5 compulsory subjects in 9 papers: • Science (2 papers) • Mathematics (2 papers) • English (2 papers) • Siswati (2 papers) • Social Studies (1 paper) (incl. History, Geography, Civics) In addition 2 optional subjects are offered with one paper each: • Agriculture • Home Economics
7.	**Language of examination:**	English (except for Swazi language paper)
8.	**Institution setting the examination questions:**	Swaziland Examinations Council
9.	**Have there been any reforms in the examination questions?**	Yes
	When? (year)	1970
	What kind?	Science paper removed from a General Paper.
10.	**Stages of development of examination questions (please describe):**	• Setters' workshop is organized and they are trained through presentation. • Setters write items which are shredded at the workshop. • Shredded items are moderated and then compiled for pre-testing. • Pre-tested items are then analysed and some items may be removed. • Items are banked for use when required.

11.	**Type of examination questions and distribution of different kind of questions.**	Partly multiple-choice, partly structured questions.
12.	**Is continuous assessment incorporated in the final examination?**	Yes [ ] No [x]
13.	**Are examination items pretested?**	Yes [ ] No [x]
14.	**Which professional groups are involved in setting the examination questions?**	• Primary school teachers • School inspectors • Tutors of TTCs • University lecturers • Curriculum designers
15.	**Are the same professionals who set the examination questions involved in marking papers?**	Yes [x] No [ ]
16.	**How are examination results & used for improving teaching in**	Reports written at the end of the marking exercise: • help in-service specialists to organize regional workshops for the teachers on the major problematic areas; • help curriculum designers to review their teaching materials; • for administration purposes inspectors visit weak schools.
17.	**To what other uses are the examination results put?**	• Selection purposes. • Certification. • For administration to look into school situations.
18.	**Main problem with Primary School Leaving Examinations?**	• Distribution of examination papers. • Invigilation problems. • Security problems.

3.7.2. Examination and Continuous Assessment in Swaziland

by Jabulisile Fakudze/Valencia S. Simelane/Evart V. Dlamini

Classroom level examinations in primary schools in Swaziland are not administered on a consistent or systematic basis. Although teachers are expected to assess their students regularly this is determined by the individual teacher. The only tests provided to teachers are two or three questions inserted at the end of each unit of curriculum materials. Since a student's score in the teacher's record book is not based on a common measure, it is impossible to ascertain comparisons across classrooms or schools. The current system of classroom testing cannot be relied upon to provide meaningful hints for either instructional or management purposes.

External examinations are a key feature of the educational system in Swaziland. There are three such examinations:

- The Swaziland Primary Certificate Examination taken at the end of primary schooling (Grade 7)

• The Junior Certificate Examination taken at the end of Junior Secondary Education (Form 3) and

• The Cambridge Overseas Certificate Examination taken two years later (Form 5) at the end of Senior Secondary School.

All the examinations are subject examinations. Examinations are set on a series of curricular areas.

The Swaziland Examination Council is responsible for all aspects of the Primary and Junior Certificate Examination: registration of students, preparation of examination papers, printing and distribution of papers, appointment of supervisors (teachers in their own school, but not in their own subjects), appointment of markers, organization of meetings during the marking process, preparation and publication of the results.

The day-to-day running of the examinations is the responsibility of the Swaziland Examinations Council. It consists of eleven members made up of the Principal Secretary of the Ministry of Education, the Director of Education and representatives of headmasters, teachers, inspectors, and the University. It appoints moderators and examiners who set examination papers.

Science examiners and moderators are recommended by the science panel made up of the senior science inspector, Swaziland Science Teachers' Association members, training college lecturers, national curriculum designer, experienced teachers, University staff and science coordinators' representatives.

The chosen examiner and moderator sign a contract of two-three years with the Examination Council. The examiner then sets two papers. The first paper is a multiple-choice type, consisting of 40 questions which are answered in 1 1/2 hours. When setting, the examiner refers to the science syllabus, pupil's books, teachers' guides and other relevant materials. A table of specification is essential when setting the multiple-choice items. It is drawn up by writing unit topics covered from grade 4 to 7 in columns and essential skills in rows, e.g. facts, classification, observation, measurement, calculation etc. For each question set, a tick is put in the appropriate space. The ticks are added in rows and columns to ensure that the questions consist of evenly distributed unit topics and skills.

The second paper consists of six questions carrying 10 marks each. Again, to ensure that the questions cover the syllabus adequately, the questions are structured and mixed. That is, Question 1 a) could carry 6 marks on plant-related questions and part b) could carry 4 marks on animal-related questions. The candidates answer both question papers.

The examiner then hands over the question papers to the moderator. The moderator writes his general remarks about the papers. The moderator's report and papers (questions) are taken to the examiner. The examiner then makes any necessary changes and the papers are finally taken to the Examination Council for printing. Once printed the Exams Council takes the draft papers to the examiner. The examiner reads through all the pages signing each and every page. The draft is then taken to the Exams Council to be sent for printing again. If there were a number of mistakes in the first draft, the second draft is given to the examiner again for approval. The final draft is kept by the Exams Council for distribution to schools via the District Education Office.

Final examinations are supervised by appointed teachers in their own subject (but not in their own schools), retired teachers and in some cases church leaders.

The Examination Council appoints markers with the help of inspectors, about six from each of the four districts. The marking exercise is carried out in December two weeks before schools close. The examiner, together with the moderator, supervises the marking exercise. The markers, examiner and moderator, after this exercise, are paid by the Examination Council through funds generated by pupils' examination fees.

General analyses of performance in examinations are carried out and reports prepared on the basis of these analyses. In the past, more detailed item-analysis information was prepared for some subject areas on the machine scoring of answers. This, however, involved too many errors and had to be discontinued.

Overview of 1993 Results

About 16,789 students sat for the 1993 Swaziland Primary Certificate Examination, out of which 14,224 passed and 2,565 failed the examination. The pass rate was 84.72% which shows an increase of 0.4% from the 1992 pass rate.

Subject	A	B	C	D	E	F	PASS	%	FAIL	%
English	288	1714	3225	3657	5340	2565	14224	84.72	2565	15.28
Math	520	1473	2790	3400	6123	2484	14306	85.21	2484	14.79
Siswati	453	1363	3934	3682	5796	2269	14328	86.33	2269	13.67
Science	440	1443	3145	3808	5602	2251	14438	86.51	2251	13.49
Soc. Science	511	1518	2842	3639	5625	2654	14135	84.19	2654	15.81
Agric.	243	594	1232	1622	2520	1189	6211	83.93	1189	16.07
Home Ec.	259	683	1360	1549	2927	1082	6778	86.23	1082	13.77
Average								85.30		14.70

The main purpose of the Swaziland Primary Certificate Examination is to select pupils for Secondary Education. An examination is said to be good if it discriminates between lower and upper achievers. The marks are put in a normal curve, the mean is 50 and the standard deviation is 10. The marks are then run in a computer to produce standard scores (z-scores). The lower cut-off point is where z = 40. An »A« mark is obtained by a student who scores at least two standard deviations above the mean. Ideally one expects plus or minus 84% students to pass the examination.

This should give a picture of how students should pass. The overall performance is categorised into three.

- An aggregate of »C« or better is a first class,
- an aggregate of »D« is a second class pass,
- an aggregate of »E« (40-49%) is a third class pass.

A similar situation prevails at Secondary. At the Junior Certificate Examinations there is selection for O Level. The examinations are used as a screening instrument. The standard deviation at Junior Certificate is 15 and the mean is still 50, but the lowest cutoff point is still 40%.

The Science Results for 1992 and 1993

In 1992, 15,916 students registered for the science examination, 13,666 of these students passed, 2,250 failed. The passes can be classified as follows:

A	B	C	D	E
424	1307	2925	3760	5249

The numbers of failures also include pupils who did not sit for the examination due to various reasons, some died, others dropped because of pregnancy, others due to financial constraints. The pass rate was 85.86%.

In the 1993 examination there were 16,689 pupils who registered for Science and 14,438 passed. The passes can be classified as follows:

A	B	C	D	E
440	1443	3145	3808	5602

The passes indicate a pass rate of 86.51% which means that the passing percentage has increased by 0.65% when compared to the 1992 pass rate.

Continuous Assessment

The introduction of continuous assessment which is still at project stage was a logical development because it is related to curricula with clearly stated instructional objectives. Actually the introduction of continuous assessment is an important milestone in the development of the education system of the country. Not only will the assessment of the child's work be scientific and comprehensive but provision for remediation is also an integral aspect of the programme.

Continuous assessment is a component of a larger education project providing the technical assistance and resources needed to design and establish a comprehensive system for student's assessment at the primary level. This system ensures detailed feedback to teachers, headteachers, parents and the Ministry of Education (MOE) regarding student achievement in presently two subjects areas, English and Mathematics. Tests are developed at three levels:

1. Lesson level **-** by teacher
2. Unit level **-** by teachers
3. End of term level **-** by the National Curriculum Centre.

It is hoped that this programme will proceed through the first nine years of a Swazi student's education with greater efficiency and leading to reduced repetition and dropout rates and improving quality as evidenced by level of mastery of basic skills to practical real life situations.

Continuous Assessment as piloted in Swaziland is a comprehensive system for measuring students' achievement of the goals and objectives delineated in an educational system's curriculum. It is based on a testing technology called criterion-referenced testing (CRT) which is specifically designed to assess whether or not an individual has learned the skills or knowledge that were taught.

A critical feature of the CRT is the use of item specifications. Item specifications are detailed descriptions of the skills and knowledge to be measured, including allowable content, level of difficulty and test item format. Specifications are developed so that they are consistent with the curriculum.

Criterion-referenced tests are particularly useful for those concerned with monitoring, evaluating, and improving an educational system. They provide information at several levels, each of which has important decision-making implications. For example a test of mathematical skills can tell a teacher whether her instruction has been effective and can pinpoint those students who have not mastered particular skills. Using this information the teacher can decide whether to reteach the lesson or move to the next competency area and provide additional instruction only to those who did not learn the skill to a sufficient level of mastery.

Swaziland has only recently started continuous assessment implementation. However, this innovative approach is not without problems. The large numbers of primary school students and teachers' lack of understanding of the main features of assessment theory are the major constraints to implement continuous assessment successfully.

3.7.3 Swaziland Primary Certificate Examination 1994 - Science/Paper I & II

SWAZILAND MINISTRY OF EDUCATION
SWAZILAND PRIMARY CERTIFICATE
EXAMINATION, 1994
SCIENCE - PAPER I

THURSDAY, NOVEMBER 17th - 08:30 a.m. - 10:00 a.m.

TIME:	**1½ HOURS**	**TOTAL MARKS:**	**40**

CENTRE NUMBER:	

CANDIDATE'S NUMBER	

INSTRUCTIONS:

1. Answer all questions.

2. Each question has four (4) answers to choose from but only one of them is correct. Circle (0) the letter of the correct answers as shown in the example below.

3. Do not circle more than one answer. If you make a mistake cross (X) your first choice and then circle the answer you have finally chosen.

4. Use ink or ball pen.

Example

How many eyes does a frog have?

A. **2**
B. 4
C. 6
D. 8

1. Plants with tap roots live better in dry regions because their roots

A. store a lot of water.
B. reach water in great depths.
C. store a lot of food.
D. support the stems better.

2. Dzambile's area is rainy, without toilets and has unprotected drinking water supply. People in her place are likely to suffer from

A. T.B.
B. diarrhoea.
C. measles.
D. polio.

3. The clouds that usually bring rain are known as

A. cumulus.
B. stratus.
C. cirrus.
D. nimbus.

4. The diagram shows parts of a flower. The part marked X is

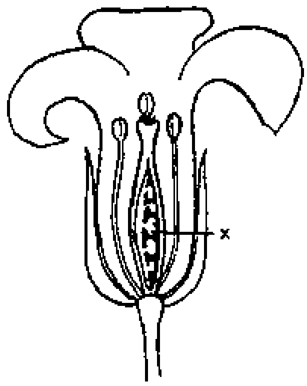

A. an ovary.
B. an ovule.
C. a pistil.
D. a stamen.

5. Below are examples of matter except

A. sand.
B. light.
C. water.
D. trees.

6. The presence of chlorophyll in plants is important for _______________ to take place.

A. respiration.
B. photosynthesis.
C. pollination.
D. transpiration.

7. Which of these is a sexually transmitted disease?

A. Tuberculosis.
B. Bilharzia.
C. Cholera.
D. AIDS.

8. According to the pie chart, which gas takes up more space in the atmosphere?

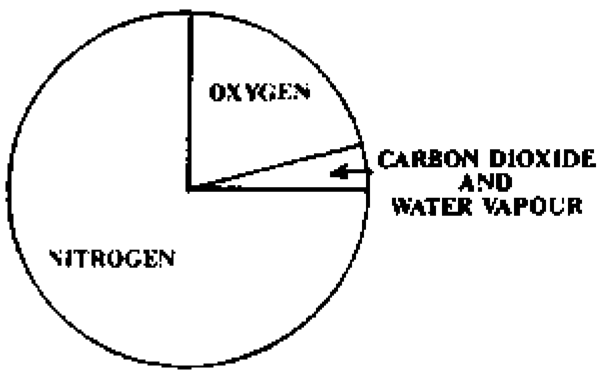

A. Oxygen.
B. Nitrogen.
C. Water vapour.
D. Carbon dioxide.

9. An object with no definite shape and volume is classified under

A. solids.
B. gases.
C. liquids.
D. none of the above.

10. Grade 7 pupils of Vulamehlo Primary School studied and counted ants on a 4 square metre piece of land. They kept the following record for 9 days.

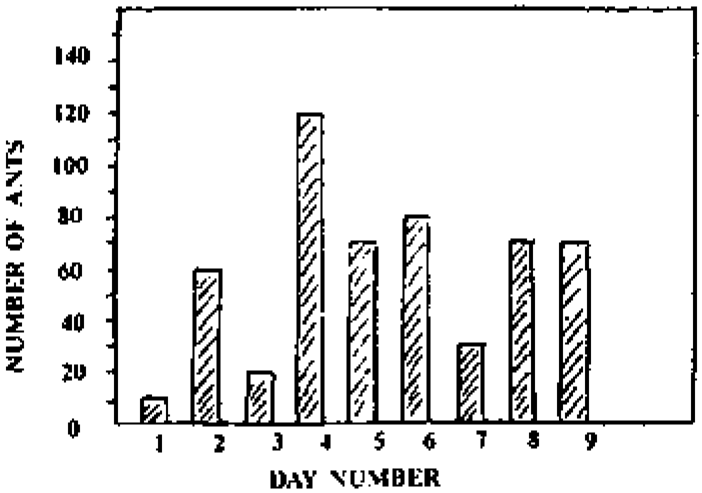

Number of Ants on Different Days

On which days did they find less than 50 ants.

A. Days 1, 3 and 6.
B. Days 3, 5 and 6.
C. Days 1, 3 and 7.
D. Days 2, 4 and 5.

11. The eclipse seen during a cloudless day is known as

A. sunny eclipse.
B. lunar eclipse.
C. solar eclipse.
D. clear eclipse.

12. A large herd of cattle is kept in a small fenced grassy area for six months. Which of the following is **NOT** likely to happen?

A. Most vegetation will be eaten up.
B. Most cattle will be fat.
C. There will be signs of soil erosion.
D. There will be very few grasshoppers.

13. Three processes used in treating water in towns are

A. boiling, washing and irrigation.
B. settling, filtering and using chlorine.
C. mixing, dissolving and evaporating.
D. cleaning, sanding and building canals.

14. A broiler becomes an adult when it is

A. 6 weeks old.
B. 7 weeks old.
C. 8 weeks old.
D. 10 weeks old.

15. Twenty girls slept in a small air-tight room. The following morning, some of them felt very weak and tired. The reason for this condition was

A. the enjoyment of a good night's sleep.
B. tiredness caused by hard work the previous day.
C. the lack of oxygen due to overcrowding.
D. their laziness because they knew work must be done.

16. Many animals feed on grass and parts of trees. Therefore the plants are called

A. consumers.
B. producers.
C. good food.
D. tasty food.

17. Which method of seed dispersal is demonstrated in the diagram. It is seed dispersal by

A. man.
B. animals.
C. wind.
D. water.

18. The main groups of rocks are

A. sedimentary, asbestos and coal.
B. sedimentary, metamorphic and asbestos.
C. sedimentary, coal and igneous.
D. sedimentary, igneous and metamorphic.

19. Look at the molars of animals shown in the diagram. Which molar belongs to a flesh eater?

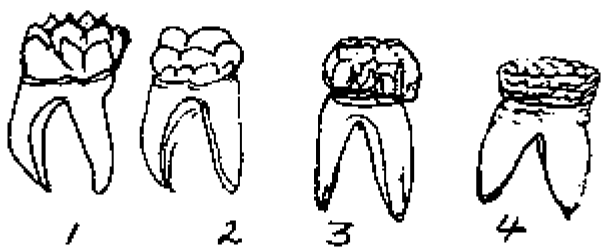

A. 1.
B. 2.
C. 3.
D. 4.

20. Wind speed is measured by a

A. thermometer.
B. barometer.
C. cup anemometer.
D. wind vane.

21. To make a sugar salt solution, dissolve (1) bottle cap of salt and (8) bottle caps of sugar in 1 litre of water. This measurement is

A. sometimes correct.
B. correct.
C. not correct.
D. correct for children only.

22. The (4)cm feather is

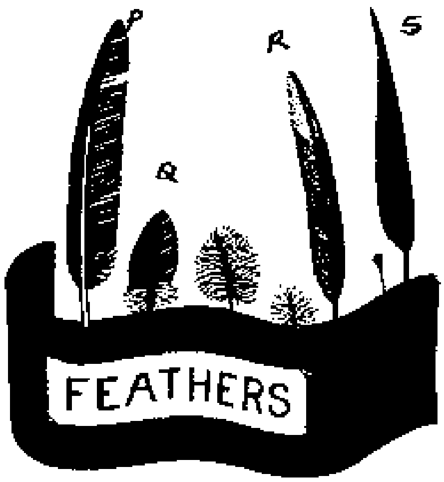

A. P.
B. Q.
C. R.
D. S.

23. It was full moon on a cloudless night when Thozo saw this shape of the moon. We call it

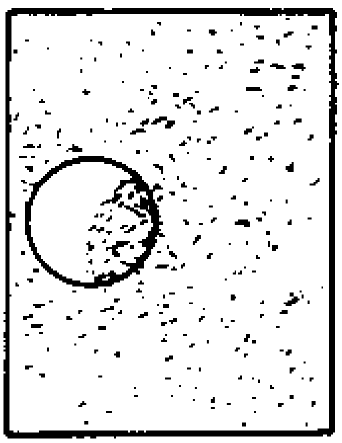

A. lunar eclipse.
B. new moon.
C. solar eclipse.
D. surprise moon.

24. Tentele could be suffering from

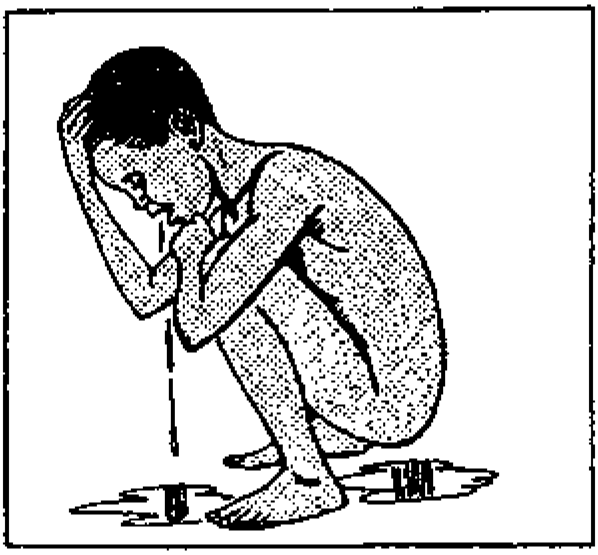

A. whooping cough.
B. headache.
C. cholera.
D. diarrhoea.

25. Some animals like man are omnivores. Which group of food is good for these animals.

A. Beef, chicken and rice.
B. Beef, porridge and lettuce.
C. Beef, pork and chicken.
D. Beef, cabbage and spinach.

26. Candles of the same length are covered with glass jars as shown in the diagram. Which candle will go out first?

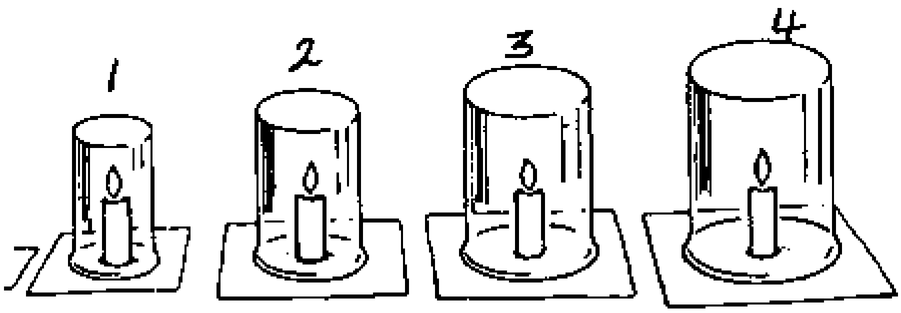

A. 1.
B. 2.
C. 3.
D. 4.

27. A stone weighs 9 grams. Which weights will balance this stone on the scale?

A. 3g 4g 3g.
B. 5g 3g 3g.
C. 4g 4g 3g.
D. 3g 3g 3g.

28. Which is the most important part of this food chain?

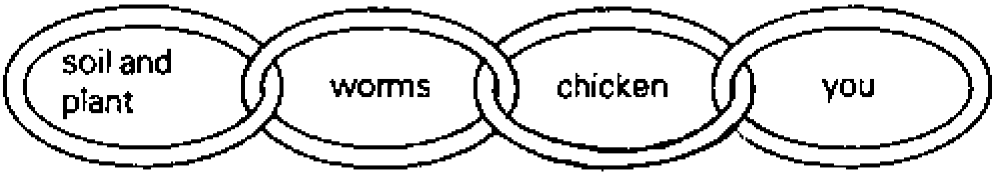

A. Soil and plant.
B. Worms.
C. Chicken.
D. You.

29. To kill bacteria and germs in water we need to add

A. salt.
B. chlorine.
C. ashes.
D. vinegar.

30. Which of the above drawings shows a new moon?

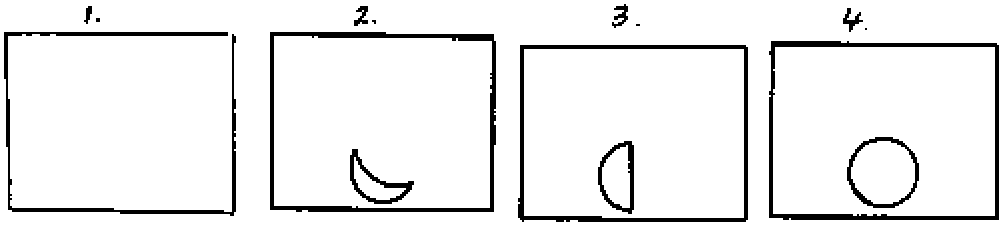

A. 1.
B. 2.
C. 3.
D. 4.

31. Breaking down of food into small pieces within the body is known as

A. respiration.
B. excretion.
C. digestion.
D. grinding.

32. Which statement explains the picture best?

A. The boy is enjoying a good sleep.
B. The man is looking at a pencil.
C. The boy is sick.
D. The doctor is reading the sick boy's temperature.

33. Look at these clouds. Clouds which show clear and fine weather are

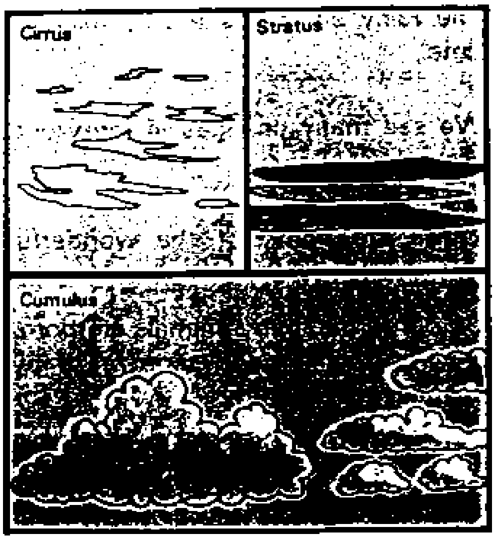

A. stratus.
B. cirrus.
C. cumulus.
D. none of these.

34. The same amount of water fills each of these containers. The container that holds more water is

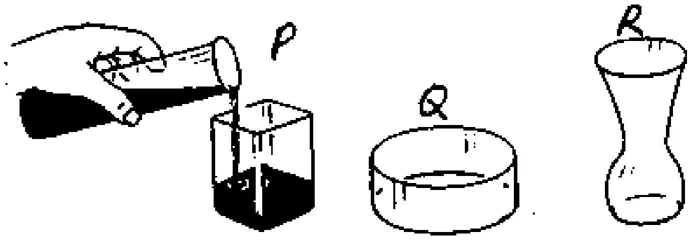

A. P.
B. Q.
C. R.
D. None of these.

35. Study the feeding habit of a chamelion shown on the diagram, This chamelion is.

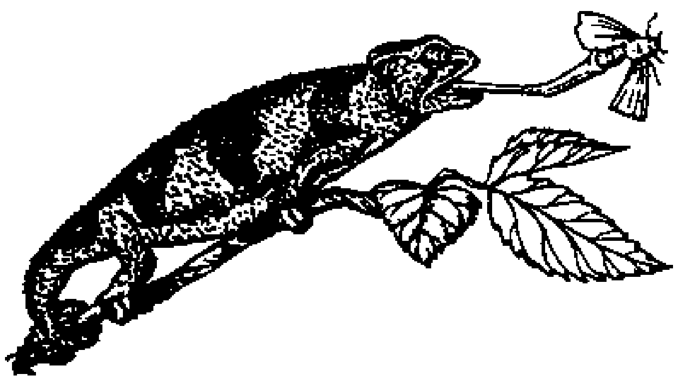

A. a herbivore.
B. a carnivore.
C. an omnivore.
D. a scavenger.

36. Study the bar graph below which shows the number of people who died from various diseases in country X and answer the question that follows.

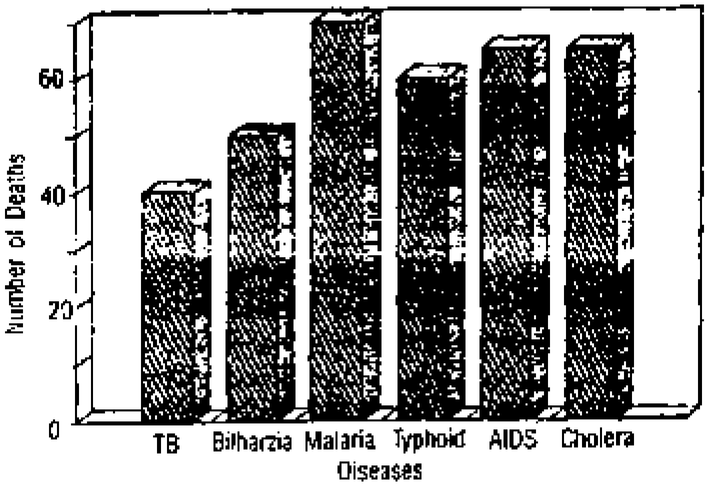

Deaths by Type of Disease

Which of the following is true according to the graph?

A. Cholera and Tuberculosis (TB) killed 120 people.
B. Cholera and Malaria killed 140 people.
C. Malaria and AIDS killed 135 people.
D. Bilharzia and Typhoid killed 120 people.

37. In the water cycle water changes

A. just once.
B. usually two times.
C. over and over.
D. four times.

38. Which piece of earth is likely to develop soil erosion faster?

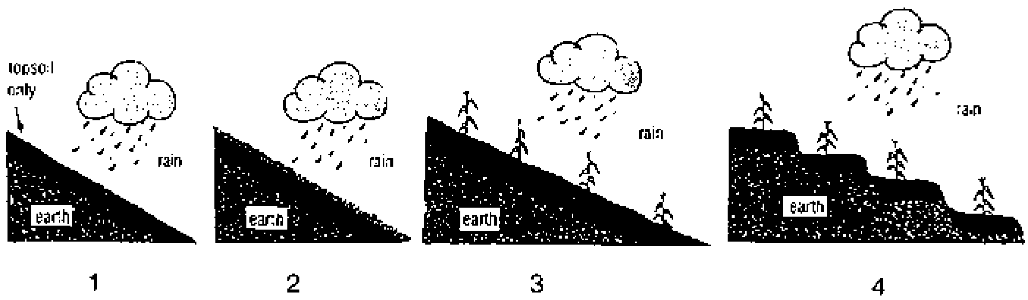

A. 1.
B. 2.
C. 3.
D. 4.

39. Which of the following can transmit AIDS?

A. Playing together of boys and girls.
B. Swimming in the same pool with sick people.
C. Having sex with someone who has AIDS.
D. Eating with someone who has AIDS.

40. The best description of water is

A. that it is colourless.
B. that it has no definite shape.
C. that it has no smell.
D. all of the above.

SWAZILAND MINISTRY OF EDUCATION

SWAZILAND PRIMARY CERTIFICATE EXAMINATION FOR PRIMARY SCHOOLS, 1994

SCIENCE - PAPER II

FRIDAY, NOVEMBER 18th - 08:30 a.m. - 10:30 a.m.

TIME:	2 HOURS	TOTAL MARKS:	60

CENTRE NUMBER:	

CANDIDATE'S NUMBER	

INSTRUCTIONS:

1. Answer all questions.
2. Write your examination number in the box above.

QUESTION 1

1. Jaha and Thoko read the volume of water in a measuring cylinder as shown below:

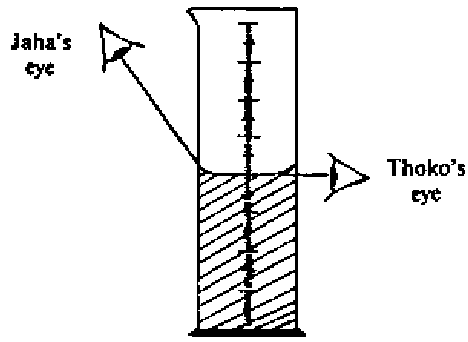

a) Who is likely to read the correct volume? _________________________ (1)
b) Give one reason for your answer in (a) _________________________ (1)

2. Write the following names of animals where they belong in the table, (lion, rabbit, mouse, man, grasshopper)

HERBIVORE	CARNIVORE	OMNIVORE

(5)

3. What are the three main food groups that make a balanced diet?

a) ____ (1)
b) ____ (1)
c) ____ (1)

(10)

QUESTION 2

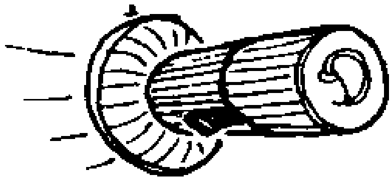

1. The torch above uses electrical energy.

   a) Give two kinds of energy given by a torch.

   (i) ____
   (ii) ____ (2)

   b) Tona switched on the torch but there was no light. Write three possible reasons for this failure.

   i) ____

   ii) ____
   iii) ____ (3)
   iv) What produces electrical energy in a torch?
   ____ (1)

2. Raw water for the Matsapha Water Treatment Plant comes from Lusushwana river.

   a) What are the two substances used to purify this water?

   i) ____
   ii) ____ (2)

   b) Name two kinds of leaves.

   i) ____
   ii) ____ (2)

(10)

QUESTION 3

Look at the following picture very carefully and answer the questions on it.

a) The animal shown spreads disease-germs. What is it?

____ (1)

b) Write two good health habits to be used in this picture?

i) ____
ii) ____ (2)

c) Which two diseases could be spread by this animal?

i) ____
ii) ____ (2)

Complete the paragraph below using the following words. Each word is used only once, (loudly, AIDS, live, get, sex and five)

Dzikila was a bad school girl. She had _______________ boy friends and had _______________ with all of them. When the teacher explained about _______________, a disease that a person can _______________ by having sex with many people, she cried _________________

(5)

(10)

QUESTION 4

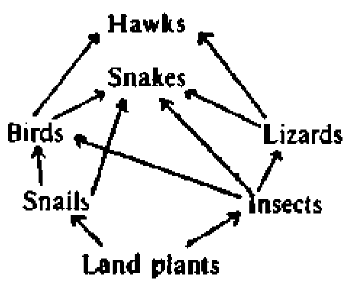

1. This diagram has many food chains. One of them is:

Land plant → snails → Birds → Snakes

Make three other food chains from this diagram?

a) ____ (2)
b) ____ (2)
c) ____ (2)
d) The producer in these food chains is _________________________ (1)

2. The drawing below shows a hatching chick.

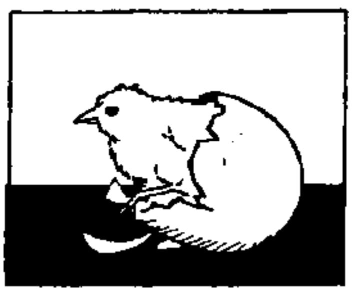

a) Fertilization in chickens takes place ___________________________ (1)
b) The time when the hen sits on its eggs is called the ______________________________ period (1)

3. Name one waste substance excreted through the skin ________________ (1)

(10)

QUESTION 5

1. Study the diagram below and answer the following questions.

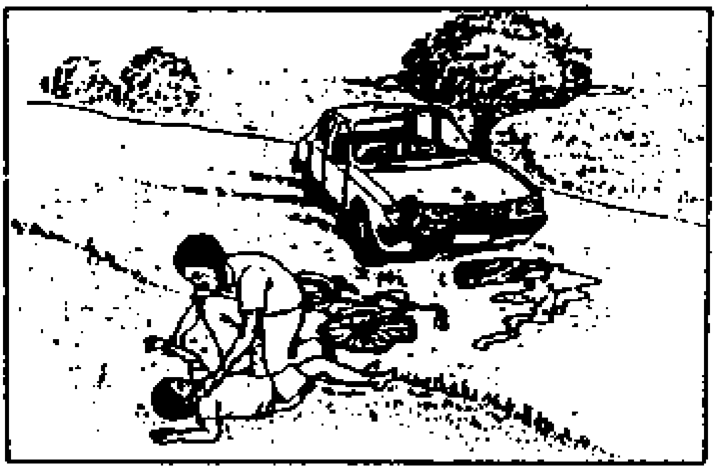

a) What has happened in this diagram?
____ (1)
b) Write two good health habits that have not been kept.

i) ____
____ (2)
ii) ____
____ (2)

2.

a) What part of air does the fire need to keep burning?
____
b) Which part of the air that can be used to put the fire out?
____ (2)

3. Write three functions of roots.

i) ____
ii) ____
iii) ____ (3)

(10)

QUESTION 6

1. Grade 6 pupils drew this bar graph after their field trip. Use it to answer questions (a) to (e) below.

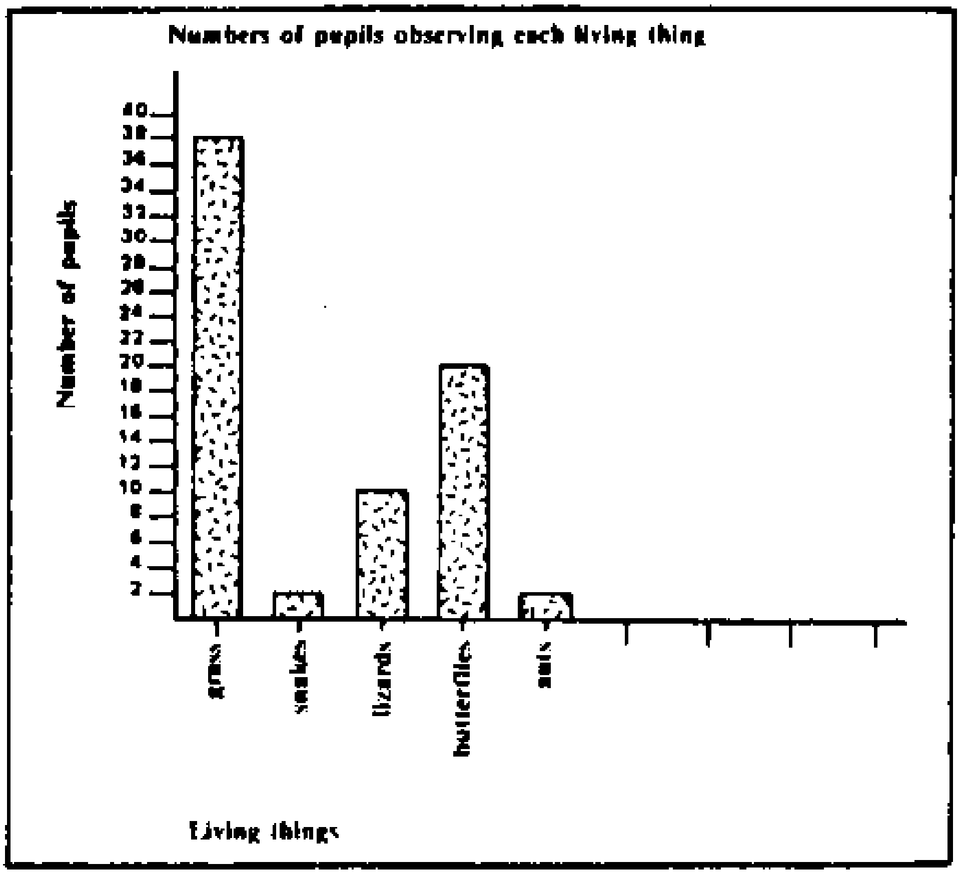

a) What were the two kinds of living things observed?
____ (2)

b) Which animals were seen by few pupils?
____ (1)

c) Which animals were most common in this area?
____ (1)

d) How many pupils saw animals? Show how you got the answer.
____
____ (3)

e) Give two examples how living things depend on each other in this area

i) ____
ii) ____ (2)

The study of living things in their natural homes is called

____ (1)

(10)

3.7.4 Swaziland Primary Certificate Examination 1993 - Science/Paper I & II

SWAZILAND MINISTRY OF EDUCATION

SWAZILAND PRIMARY CERTIFICATE EXAMINATION, 1993

SCIENCE - PAPER I

TUESDAY, NOVEMBER 23rd - 08:30 a.m. - 10:00 a.m.

TIME:	**1½ HOURS**	**TOTAL MARKS:**	**60**

CENTRE NUMBER:	

CANDIDATE'S NUMBER	

INSTRUCTIONS:

1. Answer all questions.

2. Each question has four (4) answers to choose from but only one of them is correct. Circle (0) the letter of the correct answers as shown in the example below.

3. Do not circle more than one answer. If you make a mistake cross (X) your first choice and then circle the answer you have finally chosen.

4. Use ink or ball pen.

Example

How many eyes does a frog have?

A. 4
(B.) 2
C. 3
D. None

1. Which of these is **not** a characteristic of living things?

A. Movement
B. Excretion
C. Photosynthesis
D. Respiration

2. Study these two types of leaves below.

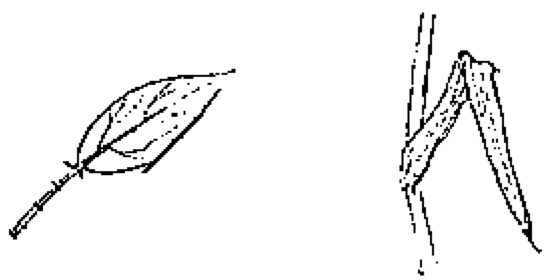

The difference between these leaves is that one

A. is edible and the other is not edible
B. has parallel veins and the other is net veined.
C. has been picked from a mango tree and the other has been picked from an orange tree.
D. one respires and the other does not.

3. Look at these parts of a flower and answer the question below.

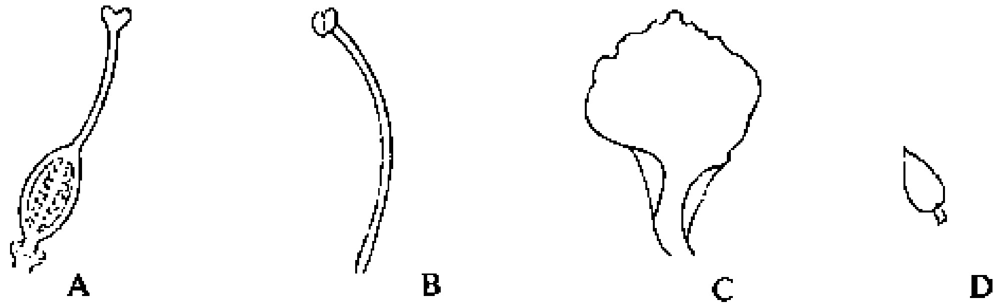

Which of these parts represents the male part of a flower?

4. Animals get more energy when they

A. sleep
B. breathe
C. eat
D. walk

5. Study this diagram and answer the question below.

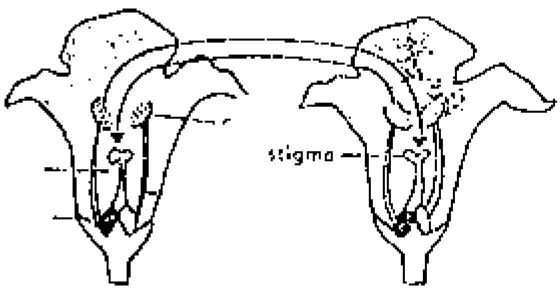

Describe the process that is taking place in this diagram.

A. Self Pollination
B. Cross Pollination
C. Seed dispersal
D. Fertilisation

6. The time taken by a simple pendulum to complete one swing depends on the

A. length of the pendulum
B. mass of its weight
C. shape of its weight
D. size of its weight

7. The volume of the solid below is

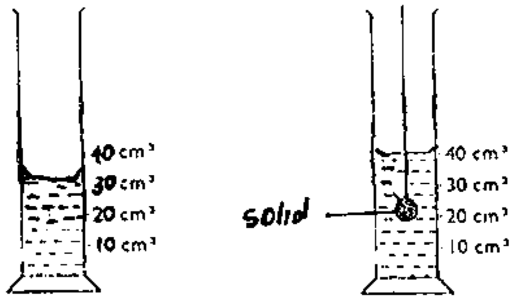

A. $10cm^3$
B. $30cm^3$
C. $40cm^3$
D. $55cm^3$

8. Look at the diagram below and answer questions 8 and 9.

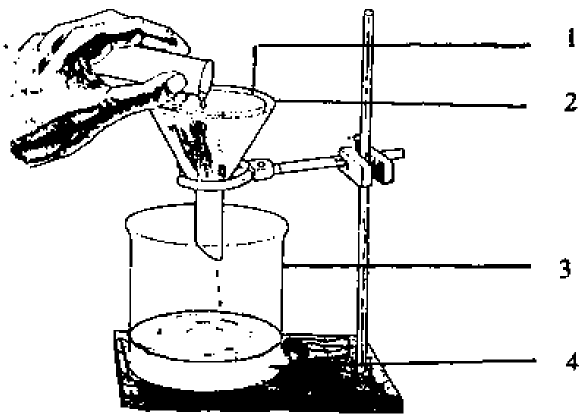

The above diagram shows the process of

A. filtration
B. evaporation
C. condensation
D. distillation

9. Which number in the diagram shows a filtrate?

A. 1
B. 2
C. 3
D. 4

10. Which of the following is true about magnets?

1. Like poles repel
2. Like poles attract
3. Unlike poles attract
4. Unlike poles repel

A. 1 and 3
B. 2 and 3
C. 1, 2 and 3
D. 2 and 4

11. An iron nail is not a magnet because it

A. will rust
B. does not attract another iron nail
C. can be attracted by a magnet
D. cannot be attracted by a magnet.

12. A piece of paper stays firmly under an overturned glass full of water that is held up without spilling any drop of water.

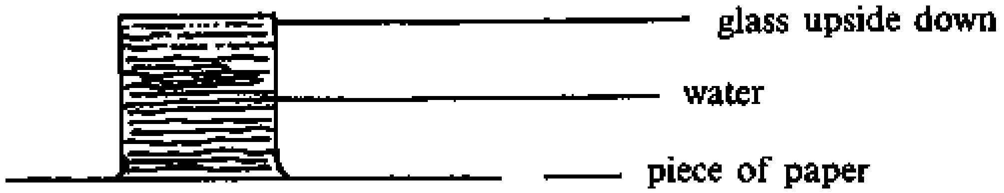

This is because

A. it is wet
B. the paper is smooth
C. it is sticky
D. of air pressure.

13. The graph below shows the heights of the pupils in a class.

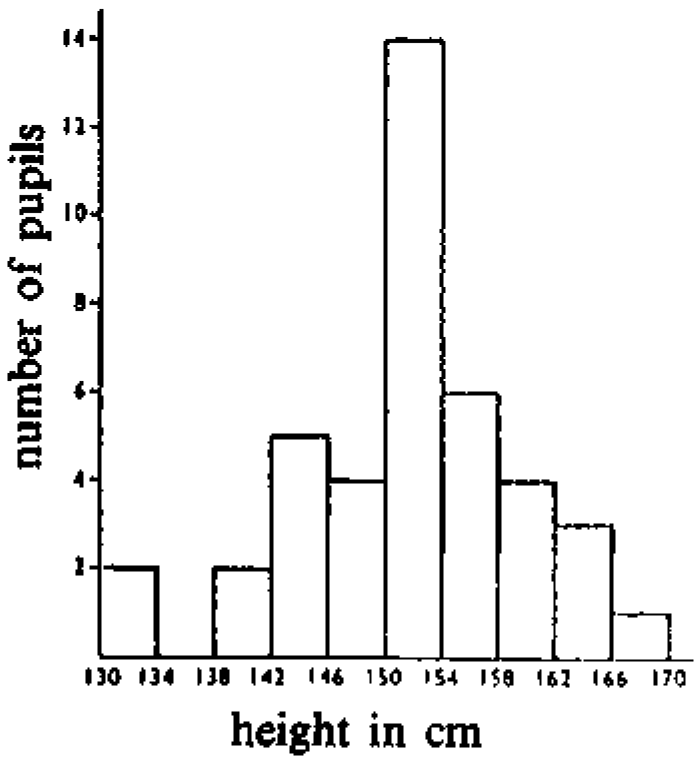

How many pupils are taller than 154cms?

A. 3 pupils
B. 4 pupils
C. 6 pupils
D. 14 pupils

14. What type of food are the following; bread, rice, potatoes, sugar and wheat?

A. Vitamins
B. Proteins
C. Carbohydrates
D. Fats

15. Which of the following stages represents the correct order of the life cycle of an insect?

A. Pupa - adult - larva - egg
B. Egg - pupa - larva - adult
C. Pupa - larva - egg - adult
D. Egg - larva - pupa - adult

16. The smallest part of matter is

A. a compound
B. an atom
C. a mixture
D. an element

17. Pick out a non metal

A. Carbon
B. Iron
C. Copper
D. Gold

18. A siphon is used to suck out water from one container to another.

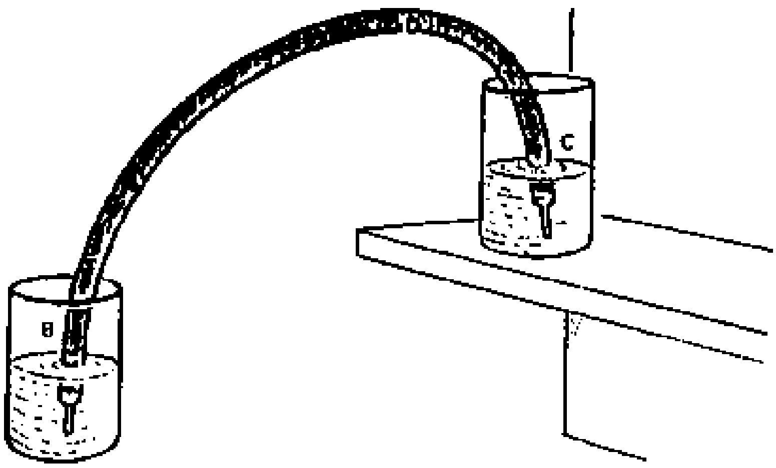

It works by

A. using the force of gravity
B. water pressure
C. air pressure
D. expansion of solids.

19. For photosynthesis to take place plants require certain conditions. Pick out one that is **not** necessary.

A. Sunlight
B. Oxygen
C. Carbon dioxide
D. Chlorophyll

20. All living things are made up of

A. meat
B. chlorophyll
C. organs
D. cells

21 Heat travels from one end of an iron rod to the other by

A. convection
B. absorption
C. conduction
D. radiation

22. Sabelo's cow died immediately after giving birth. What must he feed the calf with?

A. Growing mash
B. salt licks
C. milk
D. sugar solution

23 An example of a substance which is alkaline is

A. vinegar
B. lemon juice
C. soap solution
D. sugar solution

24. Water is commonly used as a

A. solute
B. solvent
C. solution
D. mixture

25. Mbokodvo is stung by a bee. Its sting is alkaline. Therefore he has to treat the wound with

A. water
B. soap solution
C. saliva
D. vinegar

26. Sometimes we feel uncomfortable after eating. This may be due to too much

A. water in the body
B. salt in the body
C. acid in the stomach
D. food in the stomach

27. This kind of tooth is a

A. molar
B. incisor
C. canine
D. temporal tooth

28. The animal that feeds on both plants and animals is

A. a carnivore
B. a vulture
C. an omnivore
D. a herbivore

For questions 29 to 32 refer to the diagram below

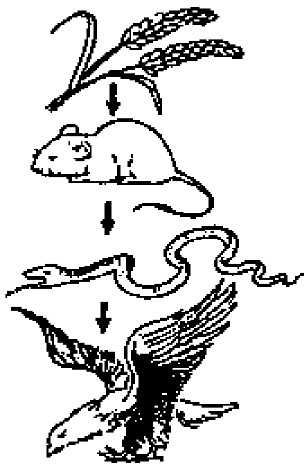

29. This is an example of a

A. food cycle
B. food chain
C. food web
D. food way

30. The producer is a

A. mouse
B. plant
C. snake
D. eagle

31. The primary consumer is the

A. plant
B. snake
C. mouse
D. eagle

32 The secondary consumer is the

A. plant
B. mouse
C. snake
D. eagle

33. Which type of soil is best for growing plants?

A. Gravel
B. Clay
C. Sandy
D. Loam

34. Pick the instrument that is used to measure temperature.

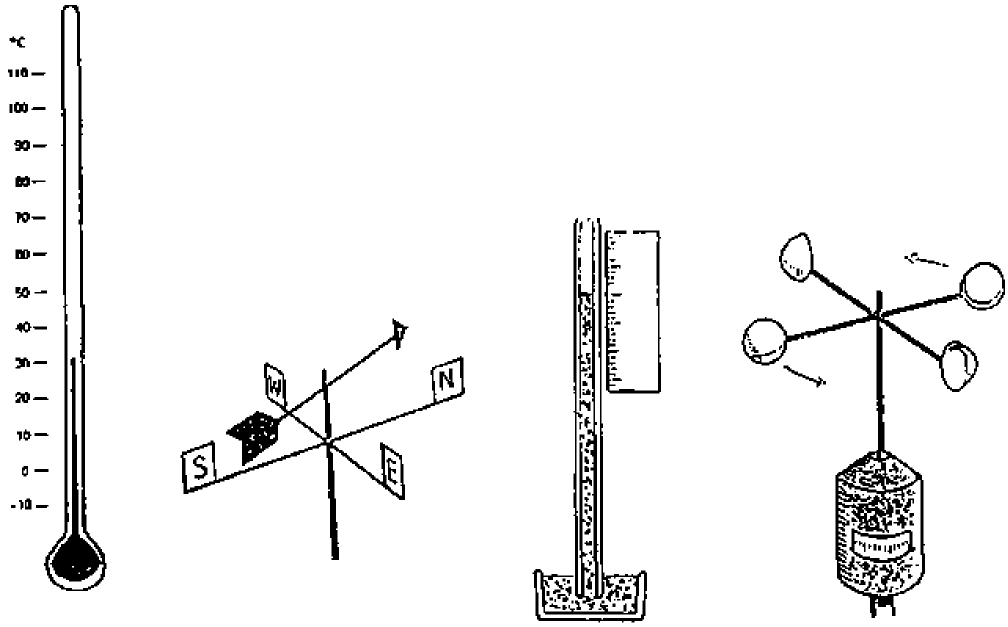

A B C D

35. Lunga has a running nose, feels hot, and keeps coughing and sneezing. Probably she has

A. dysentery
B. AIDS
C. a common cold
D. diarrhoea

36. A chameleon survives better on land. What adaptations does it have to survive? It

A. can be easily seen
B. changes its colour to that similar to the place where it is.
C. can move very fast to run away from its enemies.
D. feeds on fruits.

37. This is an example of a simple machine. Find its fulcrum.

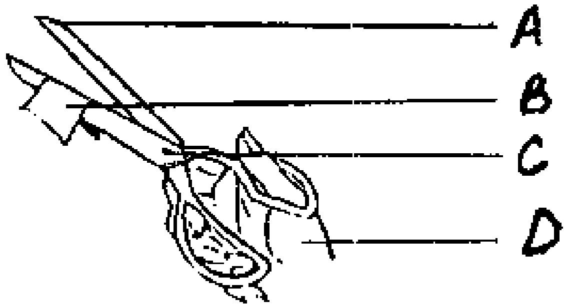

38. To keep fit one has to

A. read a lot
B. do some exercises
C. eat and sleep
D. consult a witch doctor.

39. Which one of the following factors is most needed by germinating seeds?

A. Water
B. Warmth
C. Soil
D. Light

40. If Nomsa has AIDS we should

A. not play with her
B. be afraid of her
C. treat her like one of us
D. not shake hands with her

SWAZILAND MINISTRY OF EDUCATION

SWAZILAND PRIMARY CERTIFICATE EXAMINATION FOR PRIMARY SCHOOLS, 1993

SCIENCE - PAPER II

WEDNESDAY, NOVEMBER 24th - 08:30 a.m. - 10:30 a.m.

TIME:	**2 HOURS**	**TOTAL MARKS:**	**60**

CENTRE NUMBER:	

CANDIDATE'S NUMBER	

INSTRUCTIONS:

1. Answer all questions.
2. Write answers in the spaces provided
3. Use ink or ball point pen

QUESTION 2

(a) Name three types of rocks.

____

____ (3)

(b) Which type of rock is common in Swaziland?

____ (1)

(c) Give two uses of water

____ (2)

(d) i In the boxes provided draw the particles that show water in a liquid and gaseous state. The solid state has been done for you.

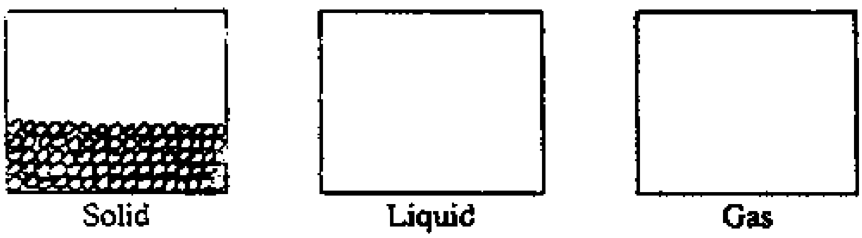

(2)

ii Give two conditions necessary for evaporation to take place.

____ (2)

(10)

C. Fill in the right word that describes the type of cloud from this list: cumulus, nimbus and cirrus.

DESCRIPTION OF CLOUDS	TYPE OF CLOUD
i Featherly, fibre-like	
ii Dark layers may contain rain	
iii Heaps separated by blue sky	

(3)

D. What do you call plants and animals that have decayed and added to the soil to make it fertile?_______________________________________(1)

(10)

QUESTION 4

(a) Study this diagram of the urinary system and label parts A, B, C and D.

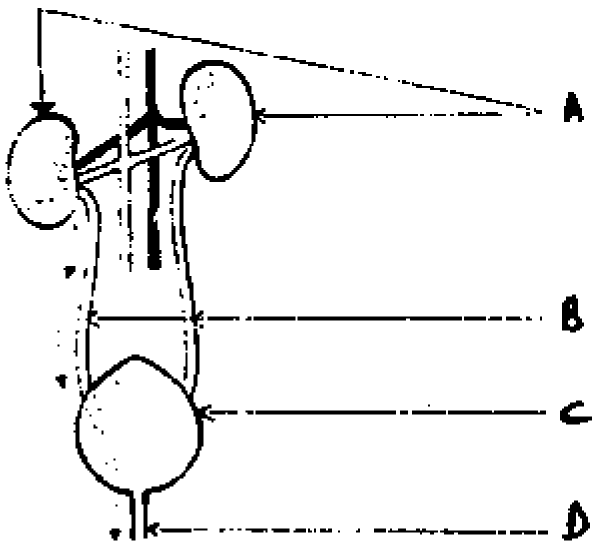

(4)

(b) What is excretion?

____
____ (3)

(c) Name any two natural resources.

____ (2)

(d) What is excreted by the lungs?

____ (1)

(10)

QUESTION 6

a) Name two types of roots.

____

____ (2)

(b) State two main functions of roots.

____

____ (2)

(c) A fully developed ovary is called a ______________________________ (1)

(d) Name two processes that take place in a leaf.

____

____ (2)

(e) Label these parts of a pendulum.

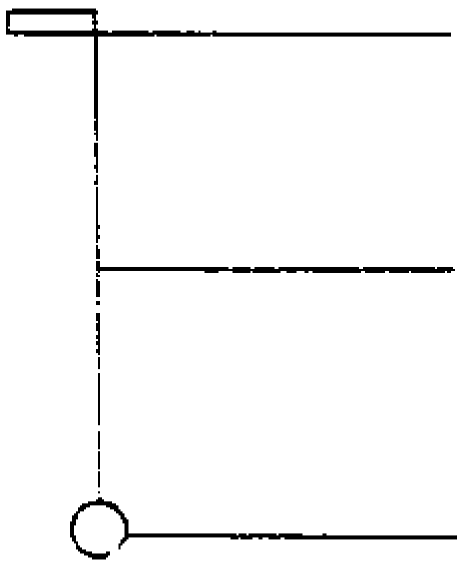

(3)

(10)

3.7.5. Swaziland Primary Certificate Examination 1994 - Agriculture Paper

MINISTRY OF EDUCATION
SWAZILAND PRIMARY CERTIFICATE
FINAL EXAMINATION 1994

AGRICULTURE

FRIDAY, NOVEMBER 18th - 11:00 a.m. - 12:30 p.m.

TIME:	1 HOUR 30 MINUTES	TOTAL MARKS:	100

CANDIDATE'S NUMBER:	

SCORE:	

SECTION I

Marks (30)

TEST INSTRUCTIONS FOR STUDENTS:

1. Read all questions carefully before you answer.
2. Five possible answers are given for each question, **ONLY ONE** is correct.
3. Choose the best answer and put a cross (x) over the letter on the **SEPARATE** answer sheet provided.

EXAMPLE:

How many legs does a chicken have?

A. Four
B. Two
C. Thirty Two
D. Ten
E. Eight

SECTION I

1. Look carefully at the flower below. Then answer the question that follow.

Where do seeds develop?

A. Ovary
B. Petal
C. Anther
D. Sepal
E. Stigma

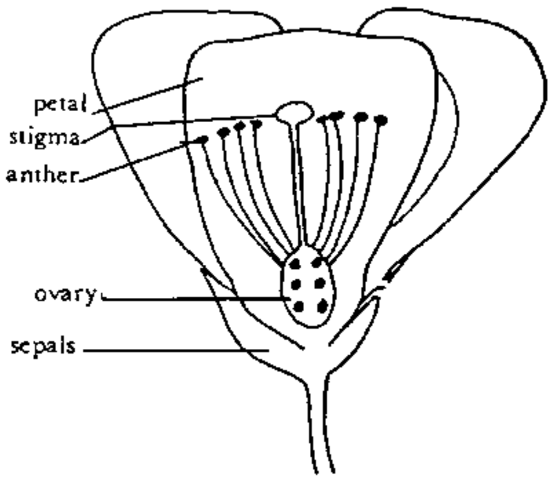

2. Where do cutworms damage a seedling?

A. At leaf level
B. At shoot level
C. At root level
D. Below the soil surface
E. At the soil surface

3. Which soil particles make the best soil structure?

A. Silt - Clay - Sand
B. Loam - Sand - Water
C. Sand - Air - Water
D. Air - Clay - Silt

4. What kind of soil is a "heavy soil"?

A. One with too much air
B. One with a 10kg weight
C. One with too much clay
D. One with a 100kg weight
E. One with too much water

5. Why do plants need water?

A. to spread their roots wide
B. to make their food
C. to die peacefully
D. to spread their leaves
E. to produce strong stems

6. A soil pH of 5.8 is good for which type of crops?

A. all legumes
B. all vegetables
C. all fruittrees
D. all trees
E. all grasses

7. Which is the most common problem of soil erosion in Swaziland?

A. muddy erosion
B. wind erosion
C. surface erosion
D. silt erosion
E. water erosion

8. What is the best way of controlling soil erosion?

A. Planting up and down the slope like they do in Malkerns
B. Overstocking
C. Grass burning
D. Cattle tracks
E. Keep the soil covered completely.

9. Which company below produces sugar?

A. Mpaka Coal Mine
B. Shiselweni Forest Company
C. Ubombo Ranches
D. Usuthu Pulp Company
E. Swaziland Fruit Canners

10. During a sugar-processing process, why is lime mixed with the juice?

A. to speed up the process
B. to stop the process
C. to remove unwanted materials
D. to make it less acidic
E. to make it taste better

11. Which climate do citrus trees grow best in?

A. a very cold climate
B. a semi-desert climate
C. a cold climate
D. a warm climate
E. a dry climate

12. Look carefully at the picture below. Then answer the questions below it.

Why does the pineapple worker cover her hands, feet and legs?

A. to protect herself from injury by the spines
B. to protect herself from injury by the sun
C. to protect herself from injury by the stem
D. to protect herself from injury by the pineapple fruit
E. to protect herself from broken bottles.

13. Spot a produce from cotton seed below.

A. jelly
B. grease
C. tar
D. oil
E. paraffin

14. Why are trees planted mostly in the Highveld?

A. Because it is hot
B. Because they need a lot of rain
C. Because it is cold
D. Because it is usually bright and sunny
E. Because it is dry

15. Which forest company in Swaziland produces gum mainly for mining?

A. Tonkwane Estates
B. Swaziland Plantations
C. Usuthu Forest
D. Bhunya
E. Shiselweni Forest

16. A ripe maize seed has a _________ patch

A. round
B. blue
C. square
D. red
E. black

17. When are potatoes harvested?

A. One to two months after planting
B. When the tops are dry
C. When the flowers develop
D. 6 Months after planting
E. 3 months after planting

18. Drying crops before storing helps to reduce losses caused by __________

A. rats and mice
B. cattle and donkeys
C. parasites
D. pests and diseases
E. man

19. How can you protect your maize crib from

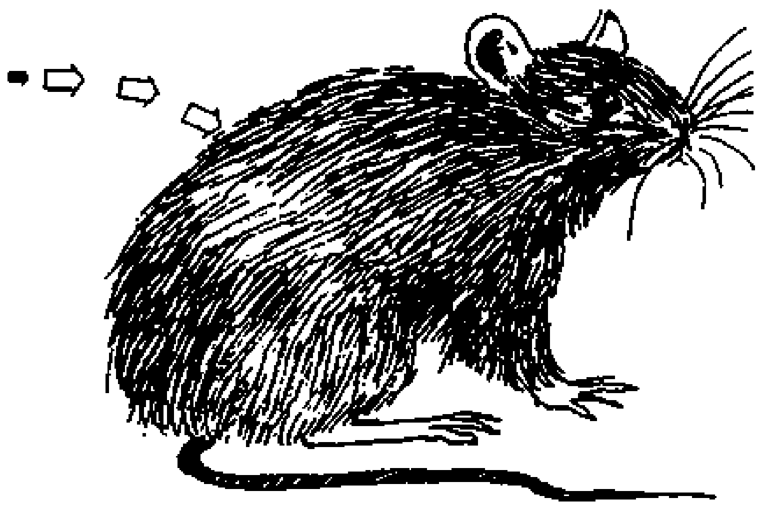

from damaging your maize cobs?

A. Kill them all
B. Guard the crops
C. Use DDT
D. Use jeyes fluid
E. Use rat baffles

20. Which, is a disadvantage of keeping chickens in an extensive system?

A. Low produce
B. Tasty meat
C. Healthy chickens
D. Good looking chickens
E. Fast growth

21. **Look carefully at the illustration on the right.**

Then answer the question.

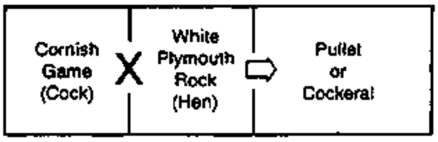

Which is the parent stock in the illustration?

A. pullet and cockerel
B. Cock, cockerel and hen
C. White Plymouth hen and Cornish Game Cock
D. Both hen and cockerel
E. White Plymouth Rock

22. How can you recognize a chicken with Newcastle disease?

A. Feathers are rough
B. Wings become paralysed
C. The bird starts shivering
D. Diarrhoea with blood
E. Legs become paralysed

23. Why is ventilation important in a broiler house?

A. it helps to keep the birds cool
B. it provides heat to the chickens
C. it provides enough water to broilers
D. it prevents birds from getting water
E. it stops birds from getting air

24. Which of the following cattle breeds has an African origin?

A. Brahman
B. Jersey
C. Simmentaler
D. Afrikander
E. Friesian

25. Which of the following is a milk product?

A. Orange Marmalade
B. Quava juice
C. Margarine
D. Holsum
E. Yoghurt

26. Hay is made just _________ the grass flowers.

A. when
B. after
C. on
D. before
E. in

27. A large grazing area where cattle put on weight is a __________

A. paddock
B. breeding station
C. kraal
D. fattening ranch
E. Bull Exchange Scheme

28. Which of the following diseases can be passed on from cattle to humans?

A. Mereks
B. Blackleg
C. Contagious abortion
D. Newcastle
E. Anthrax

29. A tick is a __________

A. harmful parasite
B. germ
C. helpful insect
D. virus
E. internal parasite

30. Cattle are being dipped by this method.

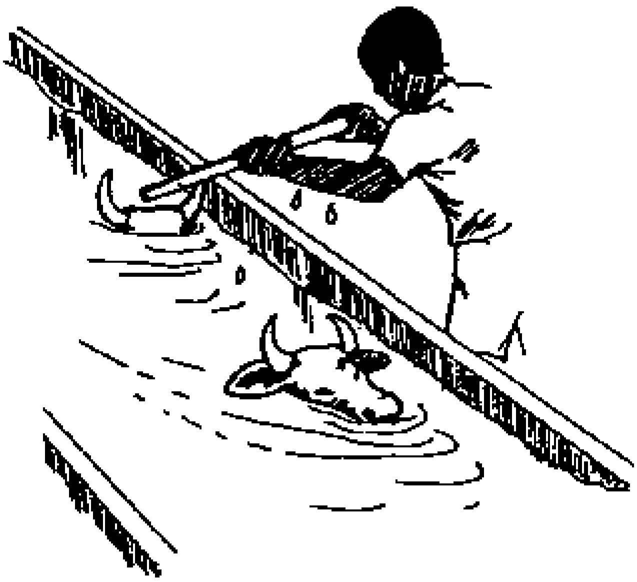

Why are they dipped?

A. to kill ticks
B. to make them as fat as possible
C. to remove their fur (hair)
D. to make them look nice
E. to feed ticks

SECTION II

Read all the questions carefully before you begin. Answer all questions on the spaces provided.

QUESTION 1

Use the following words to complete the food chain below. Use arrows where necessary.

Chicken, Man,	Grass, Grashopper,

(7)

QUESTION 2

Match the word / statements to the ones in the blocks on the right. Then **write only the letter** of the correct one on the space provided on the far right.

i) Burnt before harvesting	**A. Pumpkinfly**	____________
ii) Sunflower	**B. Rumevite**	____________
iii) Stocklick	**C. Sugarcane**	____________
iv) Keeps the chicks warm	**D. Backs of flower turn yellow and hard**	____________
v) Attacks flowers, and fruits fail to set	**E. Brooder**	____________

(5)

QUESTION 3

The chart below shows how a spinach plant grew from the 1st week of emergence to 12 weeks. The plant was measured once every week. **Study it carefully,** and then answer the questions below.

Week	**1**	**2**	**3**	**4**	**5**	**6**	**7**	**8**	**9**	**10**	**11**	**12**
Height of plant (cm)	**5**	**8**	**9**	**10**	**10**	**10**	**15**	**18**	**22**	**30**	**38**	**47**

a) By how many centimetres did the spinach grow between week 1 and week 10.
____

b) By how much did it grow between week 4 and week 6?
____

c) What could be the reason for it maintaining the same height between week 4 and 6?
____ (6)

QUESTION 4

Fill in the missing words in the passage below. The words are provided for you above the passage.

Kill; Lime; Prepare; Air; Fork; Compost; Spade; Roots; Dig

To cultivate the land means to ___________________ it for planting.

We ___________________ the soil to ___________________ weeds; to mix ___________________, and ___________________ with it, to put ___________________ back into the soil, and make it easier for plant ___________________ to spread. Tools used to cultivate the soil are ___________________, hoe, ___________________ and rake.

(9)

QUESTION 5

What is another name for the grass "Eragrostis Curvula"?

____ (2)

QUESTION 6

Complete the crop rotation for year 4 below.

Plot	Year 1	Year 2	Year 3	Year 4
A	Grass	Beans	Maize	
B	Potatoes	Grass	Beans	
C	Maize	Potatoes	Grass	
D	Beans	Maize	Potatoes	

(4)

QUESTION 7: CROSS WORD PUZZLE

Use the statement that is meant by the phrase to solve the puzzle. Fill in the correct **letter** in the blank to complete the word.

ACROSS	DOWN
1. A good fertilizer for tomatoes.	1. Treating skins for leather.
2. Potassium is an example of a major ________.	2. Increases leaf growth.
3. Hen sitting on eggs to warm them.	3. _________ is decayed plant and animal materials.
4. Export brings in the most money into Swaziland.	4. Oranges and Naartjies.

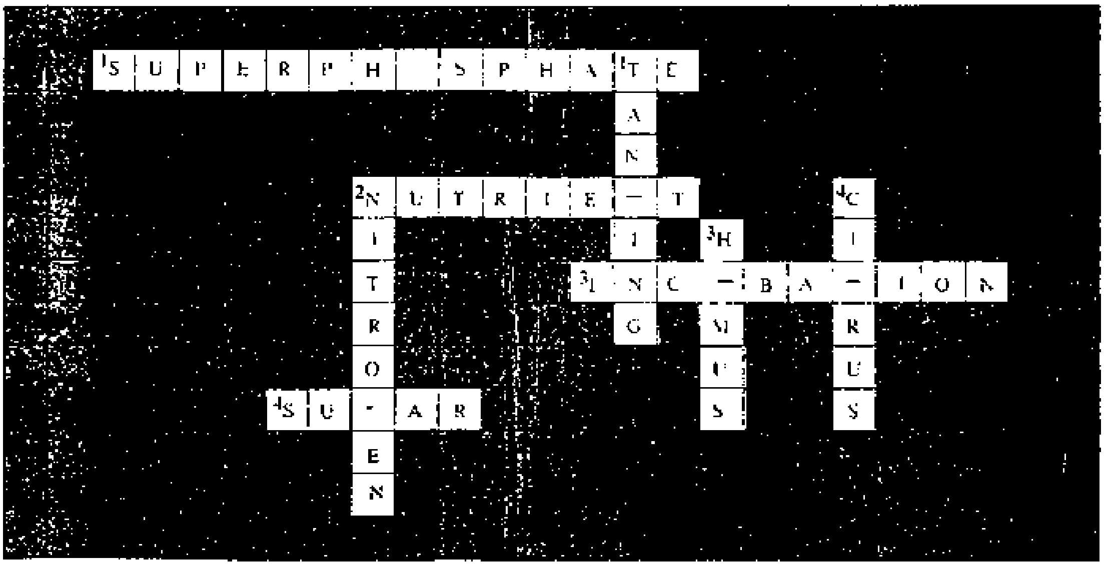

(9)

QUESTION 8

Look carefully at the illustration of a pineapple processing. Write in the missing stages 1 to 7.

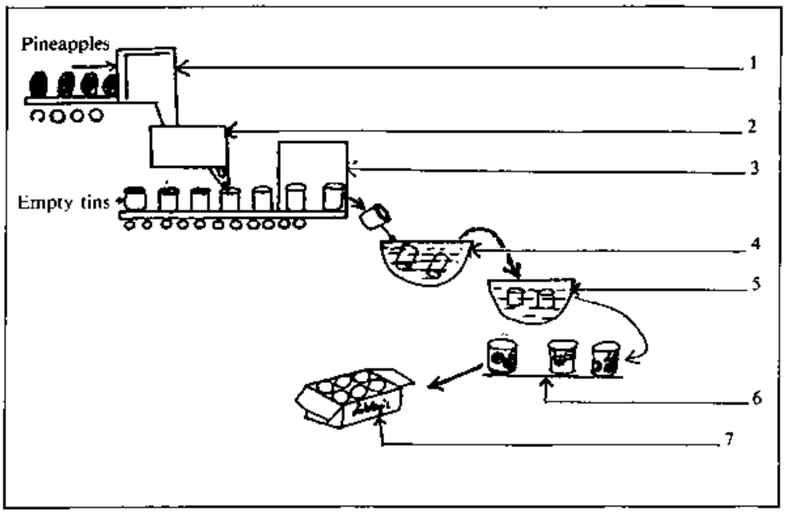

(7)

QUESTION 9

This Prevocational Agriculture student from St. Phillips High School sold produce from his crop project at home

4 bales cotton sold for E202,00 per bale
3 bags sorghum for E40,00 per bag
2 Magogogo beans for E60,00 each

Item	E	c
TOTAL		
If he spend E528,00 buying all his inputs		
i) How much money did he make?		
ii) Which crop was sold for the lowest price per unit?		
iii) How much profit / loss did he make?		

(10)

QUESTION 10

On the picture of a chicken below **label the parts marked 1 to 7**

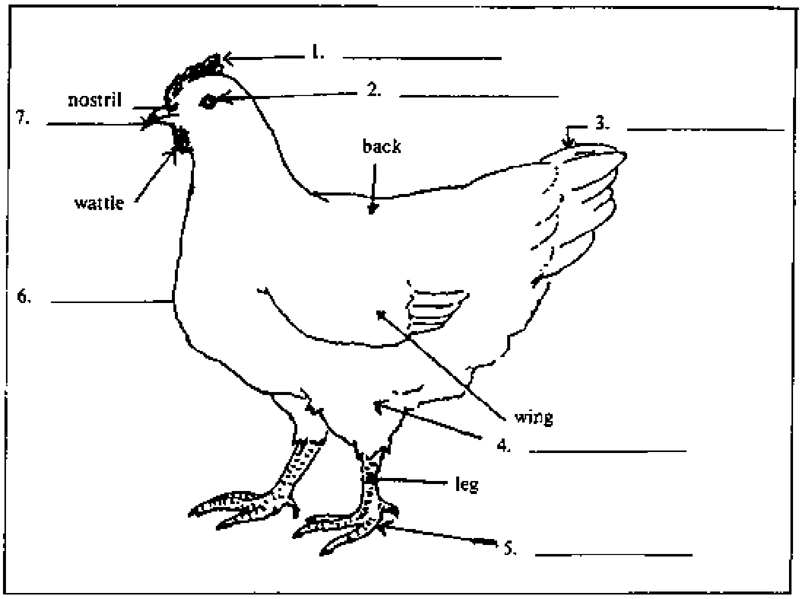

(7)

QUESTION 11

What did you do to keep the litter dry in your broiler house?

____
____ (2)

QUESTION 12

Why are Swaziland's cattle not very good for meat?

____
____ (2)

SECTION I

ANSWER SHEET (AGRICULTURE)

INSTRUCTIONS: DETACH ANSWER SHEET BEFORE ANSWERING

CANDIDATE'S NUMBER:	

EXAMPLE BELOW:

0	A	~~B~~ X	C	D	E

1	A	B	C	D	E
2	A	B	C	D	E
3	A	B	C	D	E
4	A	B	C	D	E
5	A	B	C	D	E
6	A	B	C	D	E
7	A	B	C	D	E
8	A	B	C	D	E
9	A	B	C	D	E
10	A	B	C	D	E
11	A	B	C	D	E
12	A	B	C	D	E
13	A	B	C	D	E
14	A	B	C	D	E
15	A	B	C	D	E
16	A	B	C	D	E
17	A	B	C	D	E
18	A	B	C	D	E
19	A	B	C	D	E
20	A	B	C	D	E
21	A	B	C	D	E
22	A	B	C	D	E
23	A	B	C	D	E
24	A	B	C	D	E
25	A	B	C	D	E
26	A	B	C	D	E
27	A	B	C	D	E
28	A	B	C	D	E
29	A	B	C	D	E
30	A	B	C	D	E

3.7.6. Swaziland Primary Certificate Examination 1993 - Agriculture Paper

MINISTRY OF EDUCATION

SWAZILAND PRIMARY CERTIFICATE
FINAL EXAMINATION 1993

AGRICULTURE

WEDNESDAY, NOVEMBER 24th - 11:00 a.m. - 12:30 p.m.

TIME:	1 HOUR 30 MINUTES	TOTAL MARKS:	100

CANDIDATE'S NUMBER:	

SCORE:	

SECTION I

TEST INSTRUCTIONS FOR STUDENTS:

1. Read all questions carefully before you answer.
2. Five possible answers are given for each question, **ONLY ONE** is correct.
3. Choose the best answer, then make a "cross **X**" on the correct letter on the answer sheet. The cross must fill the whole square.

EXAMPLE:

How many legs does a chicken have?

A. Four
B. Two
C. Thirty Two
D. Ten
E. Eight - (See answer sheet for your answer)

SECTION I

1. When you eat an onion bulb, what part of a plant do you eat?

A. fruit
B. stem
C. leaf
D. root
E. flower

2. Witchweed is an example of a ____________

A. pest
B. poisonous plant
C. parasite
D. poison
E. helpful plant

3. Look carefully at the picture. What is the right food chain for it?

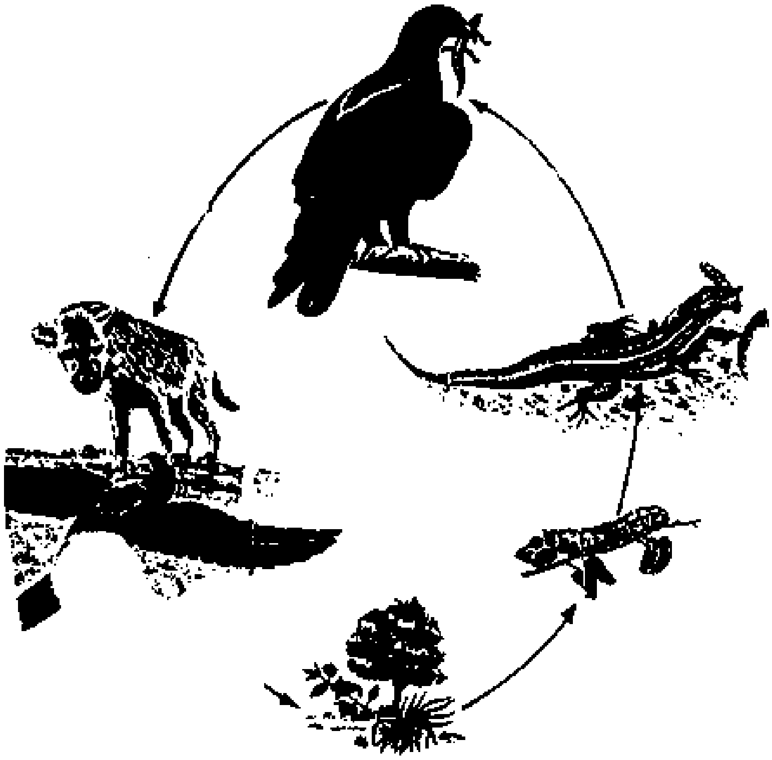

A. Black eagle ⇒ plant ⇒ worm ⇒ lizard ⇒ hyena
B. Plant ⇒ lizard ⇒ worm ⇒ hyena ⇒ black eagle
C. Hyena ⇒ black eagle ⇒ worm ⇒ lizard ⇒ plant
D. Lizard ⇒ hyena ⇒ black eagle ⇒ plant ⇒ worm
E. Plant ⇒ worm ⇒ lizard ⇒ black eagle ⇒ hyena

4. A wet soil is damaged when you

A. stand on it
B. dig it
C. clean the area
D. prepare planting lines
E. make a seedbed

5. Breaking the soil clods down to the small pieces is the same as preparing ___________

A. a fine tilth
B. raking
C. digging it
D. topdressing
E. capping

6. If you grew beetroot at home, what was the space between the plants in a row?

A. 30cm
B. 10cm
C. 15cm
D. 5cm
E. 20cm

7. How deep should spinach seeds be planted?

A. 3.5cm
B. 1.2cm
C. 1.5cm
D. 2.5cm
E. 0.5cm

8. Which one is a function of a handfork?

A. harrowing
B. removing weeds
C. thinning
D. marking straight lines
E. digging

9. To prevent this disease in tomatoes, we used a dithane- copper oxychloride mixture. Which one is it?

A. rust
B. late blight
C. downey mildew
D. black rot
E. streak

10. How much dipterex 95% WP do you use to spray cabbages with 5 litres of water? (MB = matchbox)

A. 4MB
B. 3MB
C. 5MB
D. 2½MB
E. 3½MB

11. In clay soil, pore space is ____________

A. thin
B. flat
C. large
D. good
E. small

12. What does humus add to a soil?

A. water
B. air
C. soil pests
D. nutrients
E. poisons

13. Which of the following damages plant cover if it is done wrong?

A. mulching
B. grass burning
C. rotation of crops
D. cattle tracks
E. soil erosion

14. Look carefully at the picture of a tool. What is the use of the tool?

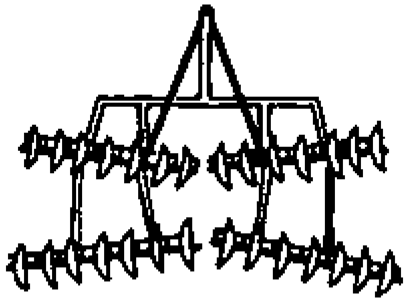

A. breaking down soil lumps
B. ploughing
C. marking straight rows
D. planting
E. weeding

15. From which part of a plant do new potato tubers grow?

A. root
B. leaves
C. stem
D. flower
E. fruit

16. How long should sweetpotato cuttings be at planting?

A. 25cm
B. 40cm
C. 30cm
D. 20cm
E. 65cm

17. Look carefully at the diagram and answer the question. How much losses of crops due to poor storage in Swaziland?

A. 33%
B. 50%
C. 25%
D. 20%
E. 10%

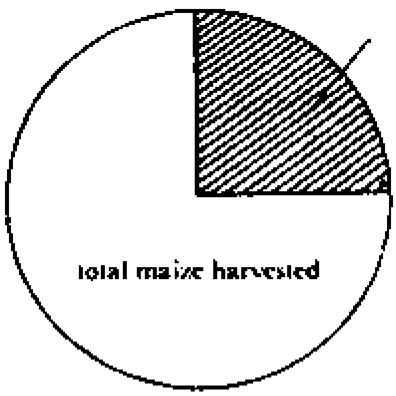

18. When beans inside a pod are hard. What should be done to avoid damage to them?

A. thin them
B. stake them
C. water them
D. harvest them
E. dry them

19. If the nuts inside a pod rattle then they ____________

A. are still very wet
B. are just wet
C. are dry
D. are broken
E. are rotten

20. Which of the following is **not** a sign of harvesting sunflower?

A. when the tops have died
B. when the plant is dry
C. when seeds begin to fall down
D. when the back of the flower turns yellow
E. when the flower is yellow and hard

21. A sixth grade student at Nokwane Primary School obtained profit from the following crops last year.

E620,00 from 2 ha of pumpkin
E260,00 from 2 ha of groundnuts
E480,00 from 4 ha of dry beans
E1 500,00 from 2 ha of sugarcane

Which of the crops gave her the least profit per hectare?

A. sugarcane
B. groundnuts
C. pumpkins
D. dry beans
E. groundnuts and sugarcane

22. The picture below shows one way of keeping chickens. Name it.

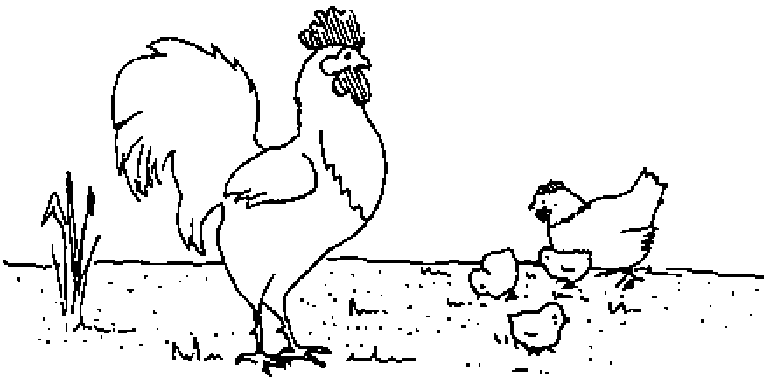

A. deep litter
B. extensive
C. battery cages
D. semi - intensive
E. Intensive

23. Which of the following should **not** be used to prevent birds from pecking each other?

A. sump oil
B. tar
C. Jeyes fluid
D. Malathion
E. ash in oil

24. Broiler finishers is recommended for birds from:

A. One day to 4 weeks
B. 15 to 21 weeks
C. 6 to 4 weeks
D. 9 to 12 weeks
E. 4 to 10 weeks

25. How much feed per week would a chicken of 650gm (weight) need?

A. 490gm
B. 330gm
C. 560gm
D. 770gm
E. 210gm

26. What do we mean by "cattle industry"?

A. feast on meat
B. hooves
C. a cattle business
D. dairy animals
E. Brahman cattle

27. Overstocking of cattle causes

A. underweight animals
B. good milkers
C. long horns
D. fat animals
E. good draughters

28. During silage making, a plastic sheeting is placed over it. What is the main reason for this?

A. to avoid heat build up
B. to avoid rain and air
C. to avoid cold temperatures
D. to avoid oxygen build-up
E. to avoid carbon build-up

29. Where are cattle fattened?

A. abattoir
B. dipping tank
C. paddock
D. kraal
E. fattening ranch

30. Which is a symptom of black leg disease in cattle?

A. short shoulders
B. black shoulders
C. black legs
D. swollen shoulders
E. fat legs

SECTION II

70 MARKS

Read all the questions carefully before you begin Answer all questions on the spaces provided

QUESTION 1

Look carefully at the picture. What is happening at the parts marked (a), (b) and (c)?

(2 marks each)

(6)

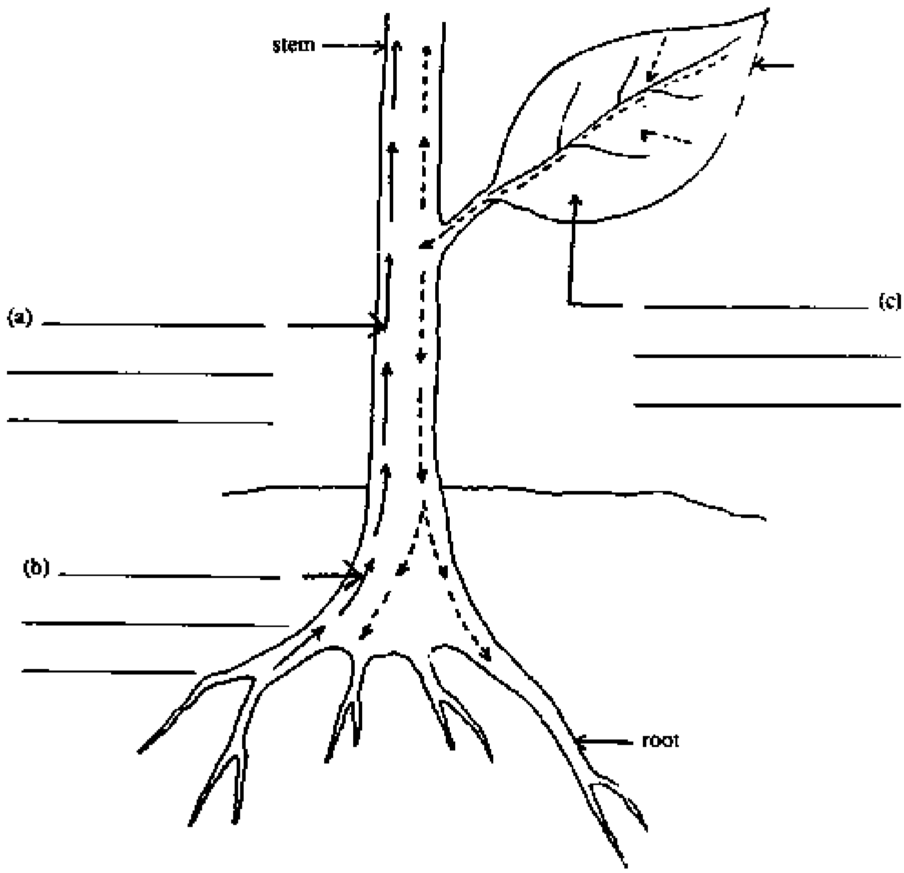

QUESTION 2

a) What is a food chain? ____

____ (2)

b) Look at the mixed pictures carefully. **Then complete the food chain below. Use names and arrows.** The first one has been done for you.

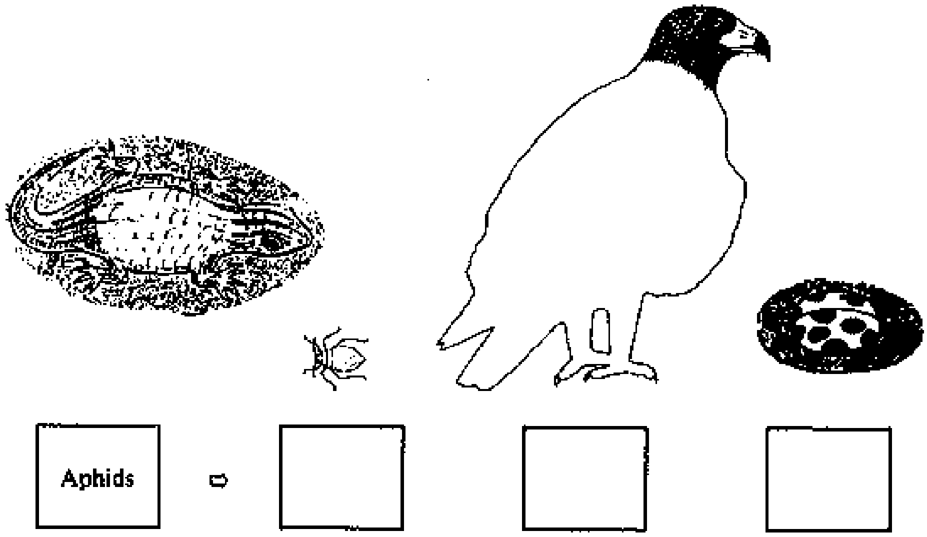

(10)

QUESTION 3

You used a set of tools for your practicals in the garden at school. Tell us, what did you use these tools for?

i) Trowel ____ (2)
ii) garden fork ____ (1)
iii) wheelbarrow ____ (1)
iv) slasher ____ (1)
v) handfork ____ (2)
vi) bushknife____ (1)

(8)

QUESTION 4

Match the statement or word **to the correct** word or statement on the right. **Then write only the letter of the correct answer** on the space provided **on the far right.**

1. Diarrhoea with blood	A. special house	________
2. Friesian	B. Oranges & Grapefruit	________
3. Bags on raised floor	C. Stick can be bent more than halfway	________
4. Orchard	D. Not resistant to ticks	________
5. Clay loam	E. Coccidiosis	________

(5)

QUESTION 5

"A school girl dies after drinking pesticide"

a). Why did the girl die here? ________________________________
____ (2)

b) Name 3 ways by which pesticides enter a human body.

i) ____
ii) ____
iii) ____ (3)

c) If you sprayed against the wind, and the chemical went straight into your eyes. What would happen to you? ________________________
____ (2)

d) What 2 things should one use to clean a chemical that came into contact with the body?

i) ____
ii) ____ (2)

(9)

QUESTION 6

Look at the maize leaf picture carefully. Then answer the questions.

a) What caused those holes? ____________________
____ (1)

b) Was it a sucking or biting animal? _____________
____ (1)

c) What chemical did you use to kill the pest?
____ (1)

(3)

QUESTION 7

On the chart provided write:

a) The number of days each crop takes from planting to harvest.

b) The month for harvesting each crop. Planting dates have been provided for you. Then answer the questions below the chart.

Name of crop	**Date on which crop was planted**	**Number of Days to harvest**	**Harvesting month**
Maize	1st September	i) ____________	v) ____________ (1)
Sweetpotato	5th October	ii) ____________	vi) ____________ (1)
Groundnuts	15th October	iii) ____________	vii) ____________ (1)
Cotton	20th October	iv) ____________	viii) ____________ (1)

c) Which one is quickest to mature? ______________________________ (1)

d) Which crop takes the longest to mature? ________________________ (1)

(10)

QUESTION 8

Give 3 ways of protecting crops in storage

i ____
ii ____
iii ____

(3)

QUESTION 9

On the space provided, write down the:

a) advantages and disadvantages of keeping **day old chicks**

a) Day old chicks

Advantages	**Disadvantages** (3)
i	
ii)	
iii	

b) Write down advantages and disadvantages of keeping **4 weeks old chicks**

b) 4 Weeks old chicks

Advantages	**Disadvantages** (3)
i)	
ii)	
iii)	

(6)

QUESTION 10

Study carefully the chart for chickens where a wrong method of feeding was used.

Results of feeding broilers using the wrong method of feeding:

Age in weeks: From 4 weeks of age	**Average weight of each bird in kg**
4	0.5kg
5	0.6kg
6	0.5kg
7	0.6kg
8	1.0kg
9	1.8kg
10	2.2kg

a) Plot neatly these figures on the axis provided showing the growth rate.

The first two have been done for you.

BROILER FEEDING CHART:

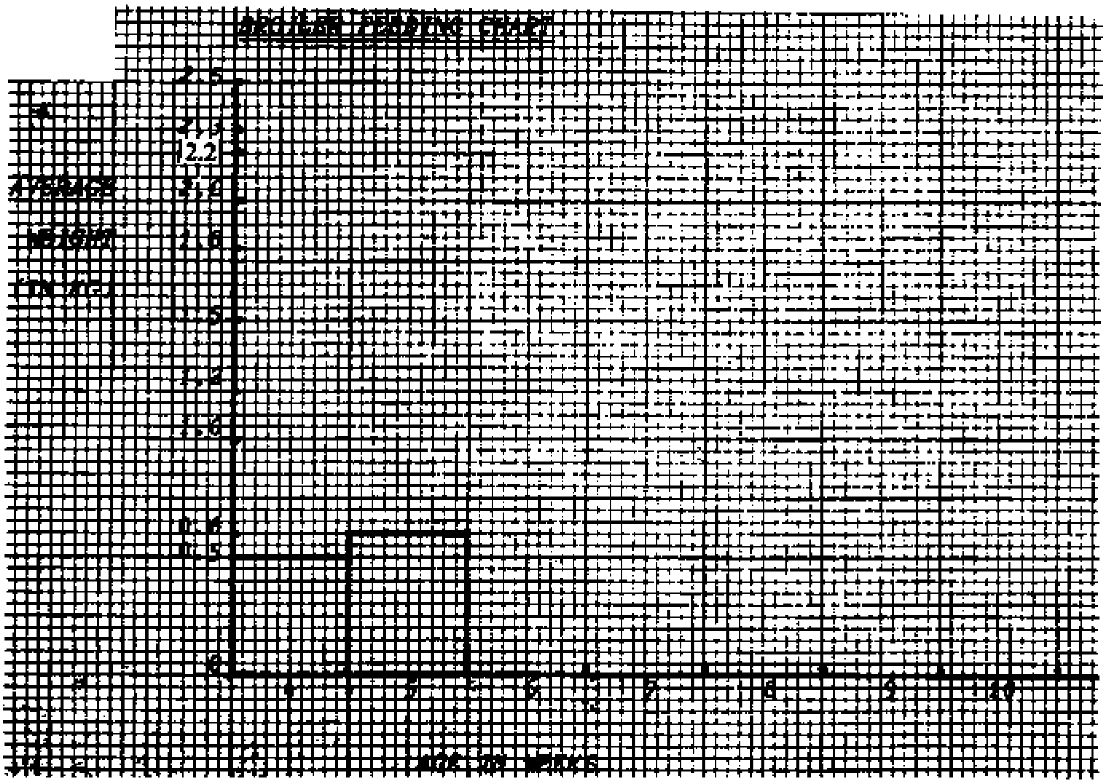

b) Give one essential or important element **not** properly given to the birds at the beginning of week 6 _______________________________________ (9)

QUESTION 11

Mrs Sifundza (near Shemula Primary School) sold 320 broilers at 10 weeks, for E12,00 each.

		E	c
a) How much money did she get for them? Show how you get your answer.	Returns		
b) If she spent El 500,00 on raising the birds. Did she make a profit or loss?	Costs		
c) How much is it?	Profit / Loss		

(6)

QUESTION 12

Complete the life cycle of a tick by writing out a full sentence for stages 1 and 3 below.

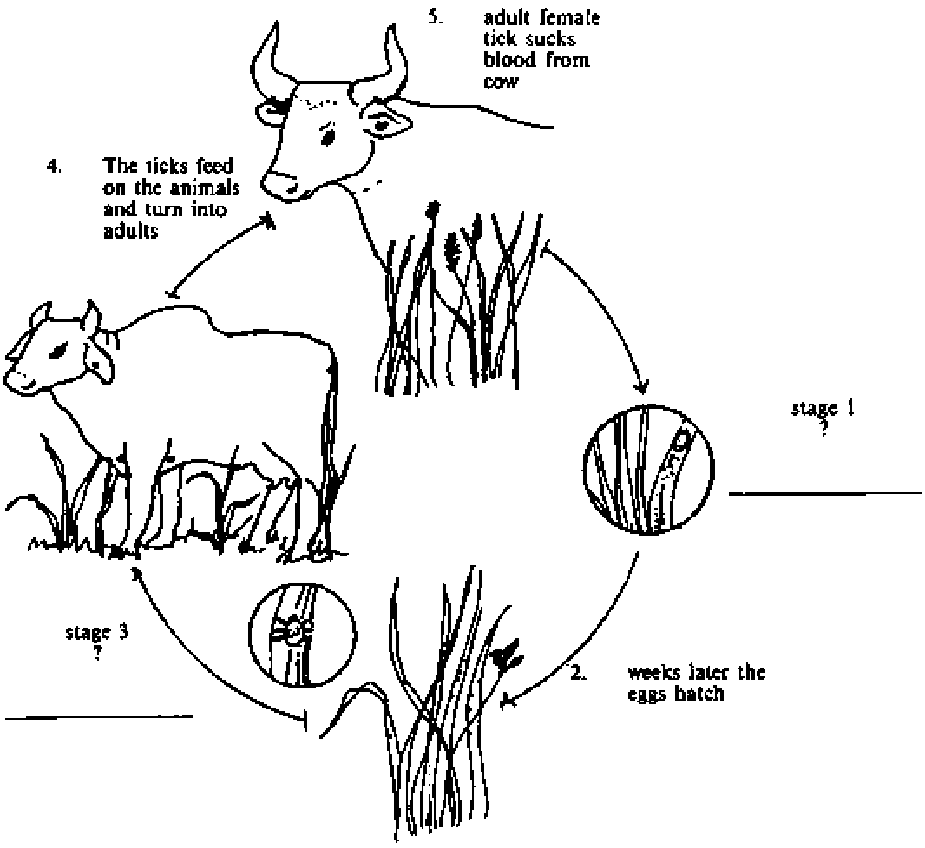

Stage 1: ____

____ (2)

Stage 3: ____

____ (2)

(4)

SECTION I

ANSWER SHEET (AGRICULTURE)

INSTRUCTIONS: DETACH ANSWER SHEET BEFORE ANSWERING

CANDIDATE'S NUMBER:	

EXAMPLE BELOW:

0	A	~~B~~	C	D	E

1	A	B	C	D	E
2	A	B	C	D	E
3	A	B	C	D	E
4	A	B	C	D	E
5	A	B	C	D	E
6	A	B	C	D	E
7	A	B	C	D	E
8	A	B	C	D	E
9	A	B	C	D	E
10	A	B	C	D	E
11	A	B	C	D	E
12	A	B	C	D	E
13	A	B	C	D	E
14	A	B	C	D	E
15	A	B	C	D	E
16	A	B	C	D	E
17	A	B	C	D	E
18	A	B	C	D	E
19	A	B	C	D	E
20	A	B	C	D	E
21	A	B	C	D	E
22	A	B	C	D	E
23	A	B	C	D	E
24	A	B	C	D	E
25	A	B	C	D	E
26	A	B	C	D	E
27	A	B	C	D	E
28	A	B	C	D	E
29	A	B	C	D	E
30	A	B	C	D	E

3.8. Tanzania

3.8.1. Overview

End of Primary School Examination

1.	**Title of examination:**	Primary School Leaving Examination (PSLE)
2.	**Amount of fees charged:**	Nil
3.	**Examination after years in primary school (6, 7, 8 years):**	7 yrs
4.	**Children's entry age in primary school:**	7 yrs
5.	**Number of pupils sitting examination in 1994:**	384,762
6.	**Examination subjects offered:**	9 subjects are offered in 3 papers: • Language (Kiswahili, English) • Mathematics • General Knowledge (Civics, History, Geography, Science, Agriculture, Health and Home Science)
7.	**Language of examination:**	Kiswahili
8.	**Institution setting the examination questions:**	The National Examinations Council of Tanzania (NECTA)
9.	**Have there been any reforms in the examination questions?**	Yes
	When? (year)	1974-1980, 1981-1982, 1983-1994
	What kind?	1974-1980: PSLE consisted of a set of four question papers. These were: • English Language • Kiswahili • Mathematics • General Knowledge (Political Education, History, Science, Geography, Agriculture, Health and Home Science) 1981-1982: Number of Examination papers increased from four to five: • English Language • Kiswahili • Mathematics • Science (Natural Science, Agriculture, Health and Home Science)

		• General Knowledge (Political Education, History, Geography) During this period (1981-1982) true-false, matching, short-answer (e.g. filling in the blanks) questions were omitted. Excepting Mathematics all papers had multiple-choice type of questions. 1983-1994: PSLE papers reduced to three only: Languages, Mathematics and General Knowledge. With the introduction of a multiparty system in the country's political arena, Political Education has been discarded in favour of Civics. Again, excepting Mathematics, the other papers consist of multiple-choice questions only.
10.	**Stages of development of examination questions (please describe):**	• **Setting:** Individually done by subject specialists. • **Moderation:** Done by a panel of subject specialists. During this stage items are discussed, amended and compiled into several whole equivalent papers. • **Editing:** Done by a panel of subject specialists other than those who moderated the papers. Here the Head of the Examination Design and Development Department becomes the Chairperson of the editing panel. **Note:** All these stages are carried out within NECTA and by NECTA staff/examination officers.
11.	**Type of examination questions and distribution of different kind of questions.**	• Language: All multiple-choice type of questions. 50 items distributed as follows: Kiswahili 25 items, English 25 items. • General Knowledge: All multiple-choice type of questions. 50 items distributed as follows: Civics 10, History 10, Science 15 and Geography 15. Considering Science only: 30% recall 20% comprehension 30% application 20% higher order • Mathematics: 50 questions. Candidates were expected to work out the solutions and write the answers on separate sheets of paper. Marks are awarded only to final correct responses. No multiple-choice questions.
12.	**Is continuous assessment incorporated in the final examination?**	Yes [ ] No [x]
13.	**Are examination items pretested?**	Yes [ ] No [x]
14.	**Which professional groups are involved in setting the examination questions?**	Examination officers within NECTA

15.	**Are the same professionals who set the examination questions involved in marking papers?**	Yes [x] No [ ] Tutors and students of TTCs form the backbone of markers while the setters/ moderators/editors play the supervisory role at the marking centre.
16.	**How are examination results used for improving teaching in primary schools?**	• The Regional Education Officers (REOs) carry out evaluation after the selection. The findings are disseminated to school inspectors and teachers who use the information to improve teaching. • NECTA carries out item analysis and the results are again disseminated to the relevant educational experts including teachers. • Past examination papers are re-edited and printed in booklets by NECTA and sold to teachers, parents, pupils and other interested parties.
17.	**To what other uses are the examination results put?**	The examination results are mainly used for selection into secondary schools. It may be called Form I Entry Examination. **Note:** The Four-Year Teacher Grade B Course whose selection depended on the PSLE results has been scrapped off by the Government.
18.	**Main problem with Primary School Leaving Examinations?**	• Administrative, handling/security problems: since the examination results are mainly used for selection and the number of places available in the Government secondary schools are so few and far apart there is a cut-throat competition leading to increasing number of dishonesty cases. • Transportation problems: Tanzania is an expansive country in terms of area. Most of her roads are not in good shape thus leading to haulage problems. Lorry break-downs during dissemination of question papers and collection of answer scripts are not uncommon. In addition to transportation problem, printing and marking costs are becoming increasingly overwhelming.

3.8.2. An Overview of the 1993 Primary School Leaving Examination

by Janet P. Kitosi, National Examinations Council of Tanzania, and Ibamba P. Isengwa, Tanzania Institute of Education

The Primary School Leaving Examination in Tanzania is normally taken once a year, on a single day assigned for the purpose. The 1993 examination was taken on the 5th of October, 1993. It tested a total of 9 subjects namely English, Kiswahili, Mathematics, Political Education, History, Science, Agriculture, Home Science and Geography. However, the number of papers offered were only three because most of these subjects were combined to form one paper (Mathematics, General Knowledge, English and Kiswahili). Each of these papers contained 50 items each of which carried one Mark. Hence for the three papers a candidate could score 150 Marks.

All the 50 items of the Language and General Knowledge papers were of multiple-choice type and candidates were required to attempt all the questions in each of these papers in one and a half hours. The Mathematics paper was allocated 2 hours instead of 1 1/2 hours as with the other two papers. This is because none of the questions in this paper was a multiple-choice type. Hence candidates needed more time to do their calculations in order to get the answers to the items posed.

Except for the English section of the Language paper, all the three papers were set in Kiswahili. There is no separate paper for the science subjects. Questions testing these subjects form a section in the General Knowledge paper. This paper is divided into four sections as follows:

Section I:	Political Education	-	7 items
Section II:	History	-	8 items
Section III:	Science	-	20 items
Section IV:	Geography	-	15 items

For the 1993 examination out of the 20 science items, 15 tested Science (including Home Science) and 5 items tested Agricultural Science. For each of the three papers comprising the 1993 PSLE, two equivalent papers were set.[1] These were equivalent in the sense that they were testing the same objectives and content as can be seen in the examples given below:

[1] In 1990 the country was divided into 5 »examination zones« with 5 papers testing e.g. Science. The number of different zones was reduced over the years to two, and since 1994 to only one paper per exam subject for the whole country.

General Knowledge 1		General Knowledge 2	
Q23.	Which of the following sets of characteristics could be used to classify an animal as a reptile?	Q22.	Which of the following sets of characteristics could be used to classify an animal as a mammal?
22.	The lung is one of the excretory organs. Other such organs are:	21.	Sweating is one of the ways by which waste products are removed from the body. Other ways are:
32.	How many °C are equivalent to 158°F ?	31.	How many °F are equivalent to 40°C?

Each of these two papers was sent to half the country, i.e. 10 administrative regions because Tanzania Mainland has 20 of such regions. So the country was divided into two »Examinations Zones«.

The distribution of papers was such that adjacent regions could not get the same paper so that in case of leakage it could be localized rather than have it spread all over the country.

The National Examinations Council (NECTA) was entrusted with the role of setting, moderating, printing, distributing and marking of the 1993 PSLE papers. The Regional Education Officers (REOs) were given the tasks of selecting pupils for further education in secondary schools and also that of carrying out the quantitative and qualitative analysis of candidates' performance in the PSLE for their respective regions.

Latest Developments in Examinations in Tanzania

1. The number of equivalent papers set was reduced from three in 1992 to two in 1993, and finally in 1994 to only one exam for the whole country. This development has a direct bearing to the tremendous decrease in cases of leakages. All along NECTA has been taking deliberate efforts to educate those handling exam papers on the meaning and importance of observing a high degree of confidentiality in all issues pertaining to examinations. Furthermore NECTA is nowadays working very closely with the national security forces and the police right from the time the papers are set until when the exam is taken and marked.

2. For the first time NECTA required candidates' photographs in the 1993 examination for identification purposes. In the past there were cases where relatives or elder brothers and sisters of candidates could sit for the examination on behalf of the actual candidates. This practice was possible because the person supervising a centre normally comes from a different school and he could not tell whether the candidates appearing for the examination were actually the right ones or not.

3. Again for the first time NECTA instructed the Regional Education Officers (REOs) to establish examination centres in their regions whereby neighbouring schools could take the examination at one centre. This exercise was aimed at reducing the number of centres so that the time spent in distributing and collecting the papers could be reduced.

Problems

• Due to lack of funds and facilities, such as adequate transport, there are no pretests of the examination items.

• The number of dropouts, i.e. candidates who do not show up for the examinations, has been increasing year after year particularly in areas indulged in pastoralism and also due to girls getting pregnant and being sacked from the school before the examination time.

• Repeaters: By law Std. 5-7 pupils are not supposed to repeat classes. But through some tricky means a lot of students repeat Std. 7. However, whenever this is discovered the results in the exam are nullified.

3.8.3. Primary School Leaving Examination (PSLE) in Tanzania Mainland

by Christopher H. Mbiku, National Examinations Council of Tanzania, and Deogratias L.S. Mgema, Tanzania Institute of Education

Historical Background

Primary School Leaving Examinations (PSLE) have been in existence in Tanzania Mainland since 1967. Before 1967 there used to be the General Entrance Examination (GEE) which marked the completion of primary school education and also served as an entrance or selection examination into secondary schools. The GEE was set and administered centrally by the Examination Section in the then Directorate of Curriculum Development and Examinations at the Ministry of National Education Headquarters.

In 1971 the National Examinations Council of Tanzania (NECTA) was established. In 1974 the National Examinations Council started setting and administering the PSLE.

In 1976 the administration of the PSLE changed. It was decided that the preparation of the PSLE questions or items should remain under the central management and control of the National Examinations Council of Tanzania, and that the reproduction (or printing), distribution/administration, marking and other related activities be done by each region under the direction and control of the Regional Education Officers.

Nature and Purpose of the PSLE

From 1974 until 1980, the PSLE consisted of a set of four papers which required an average total of 5 1/2 hours. The examination was normally taken once a year on a single day assigned for the purpose. Beginning in 1981, the number of papers increased from four to five with each paper lasting one hour. These papers were Kiswahili, English, Maarifa (General Knowledge), Hisabati (Mathematics) and Sayansi (Science).

From 1971 until 1980, the type of questions (e.g. multiple-choice, true-false, essay, matching), the number of questions as well as the timing allowed for each paper varied. The fifth paper (Sayansi), introduced in the 1981 PSLE, used to be Section IV of the General Knowledge papers administered between 1971 and 1980. Beginning in 1981 the variations in the type of questions were limited. Except for the Mathematics papers, all the other papers contained mostly objective questions of multiple-choice type.

The PSLE is an achievement examination administered to serve a variety of purposes as defined for basic primary education in Tanzania Mainland.

Assumptions on the Development of PSLE

The setting of the draft papers was done by tutors in the teachers' colleges. Before the final drafts of the Primary Leaving Examination papers were submitted to the Regional Education Officers for further processing, they had to be moderated by subject specialists. The moderators took all necessary measures to ensure that the papers were well-balanced in terms of content coverage, objective and equally fair to candidates at Standard Seven (Std. VII) level for all parts of Tanzania Mainland. It is at this stage where the National Examinations Council experts ascertain the acceptability of the standard required and usability of the PSLE to test pupils with varying differences in academic competence. This aspect, however, is done without regard to geographical location of the schools. The type of PSLE items in current use consist largely of multiple-choice questions.

Test and measurement specialists recommend that trial testing (pretesting) be accorded a special phase in test construction. The merits of pretesting rest entirely upon the likelihood that it will help assemble a test with good quality questions in terms of their psychometric properties. Usually, this process of pretesting allows the **difficulty** of each question to be determined. It also helps to reveal the ability of each question to **discriminate** between strong and weak pupils. Apart from these virtues, pretesting also helps to cast light on the strengths and weaknesses of items and thereby suggests needed improvements in the development and administration of the entire examination.

Although about 70% of the PSLE questions are of the objective type, the National Examinations Council of Tanzania does not undertake pretesting activities owing to economic constraints. Suffice it to say here that NECTA is very much aware of the fact that pretesting, if well conducted, can increase the validity and reliability of an examination.

In order to determine the need for pretesting, at the PSLE level of operations, the Department of Research and Evaluation of NECTA developed a project aiming at carrying out item analysis on the 1981 PSLE papers. This project was developed on the assumption that the findings of these studies would provide a valuable picture of the kind and extent of reliance NECTA could put on the use of objective tests in national testing programmes. Specifically stated, the objectives of the project were:

- to identify items suitable for item banking;
- to carry out training programmes on test construction and other related techniques;
- to lay a firm basis for objective testing at the Primary School level.

The results of the research are contained in a book published by the Department of Research and Evaluation in March, 1983.

PSLE for the Period 1983 - 1992

In 1983, the National Examinations Council of Tanzania was once again entrusted with the roles of setting and moderating PSLE papers, reproduction (printing), distribution of the question papers up to regional headquarters and marking. The Regional Education Officers were given the following tasks in respect of PSLE:

- to distribute the question papers (already in envelopes sealed by NECTA) to examination centres/schools;

- to collect the answer-scripts from the centres and forward them to the marking centre;

- to collect the original consolidated mark sheets and the scripts after the marking exercise;

• to supervise the selection exercise;

• to carry out a quantitative and qualitative evaluation of PSLE performance of candidates.

Due to the large number of pupils (about 300,000) taking the PSLE, the examination papers have been restructured. Several major changes have been effected in the construction and administration of the PSLE.

First, the number of examination papers has been reduced from five to three: namely Lugha (Languages), Hisabati (Mathematics) and Maarifa (General Knowledge). In Lugha, Kiswahili and English are examined. This paper consists of fifty multiple-choice questions. Candidates are required to attempt all the questions in one hour and thirty minutes. In Hisabati, candidates are examined in elementary arithmetic, cartesian geometry, algebra, commercial arithmetic, statistics and coordinate geometry. This paper consists of fifty questions and candidates are required to attempt all the questions in one hour and forty-five minutes. Although the method used to arrive at answers is not required, candidates are given a working space in the question paper and answers are written on a separate sheet of paper designed for this purpose. In Maarifa, four subjects are examined.[1] These are: Political Education - 10 items, History - 10 items, Science -15 items and Geography - 15 items. All the items in this paper are multiple-choice type.

[1] Since 1993 the General Knowledge Paper consists of questions from six subjects. See also »3.8.2. An Overview of the 1993 Primary School Leaving Examination«.

For the purpose of selection of pupils to join the Government Secondary Schools, each question or item carries an equal weight so that a maximum of 150 points may be scored for all the three papers.

The second aspect of the PSLE lies in the preparation of the questions themselves. In the past, questions were set by various tutors teaching in the teacher training colleges and then moderated by the subject specialists in the National Examinations Council of Tanzania. Nowadays, the questions are set by subject specialists within NECTA and moderated by a panel of subject specialists again within NECTA. This means that the quality of the examination questions on the one hand and the security of PSLE papers on the other hand have been enhanced.

In the past, as stated above, NECTA used to set and moderate five papers for each region. These papers were different in the sense that they had different answers but were equivalent in weight and content. At present, the situation is different. NECTA has divided Tanzania Mainland into »examination zones«. These zones are not permanent. They vary in place and time. If, for example, Kilimanjaro Region belongs to zone one this year, next year it may be in zone three. In the period 1983 - 1990 there were five examination zones. Tanzania Mainland has 20 regions which means that each examination zone consisted of four scattered regions. The advantages of administering PSLE in zones lie in the security of the examination papers, in that the temptation to steal the papers or cram some of the contents therein is discouraged by the wide choice one has to make. The disadvantage of this system lies in the cost: for five zones alone one needs to set and moderate fifteen different but equivalent papers. An equivalent number of films and plates are used during printing. It is for this reason that the number of examination zones has been reduced to four and three in the years 1991 and 1992, and finally to one nationwide zone since 1994.

In order to strengthen the security of the Primary School Leaving Examination further, the National Examination Council of Tanzania has decided to work jointly with the other state organs, i.e. the National Security Force and the police. These are fully involved during the printing stage, transportation from NECTA headquarters to the regions and the marking exercise.

Finally, there comes the aspect of motivation. Apart from educating those who handle the examination papers on the meaning and importance of security, an incentive package is necessary if one is to achieve the desired goals. NECTA realized the immense value of motivation and started to implement this in 1983. It is for this reason, in conjunction with those stated above, that PSLE leakage is now history. But this does not imply that PSLE is devoid of irregularities. However, a stage has been reached where one may sigh with relief.

Marking of PSLE Scripts

One of the most important stages in the administration of examinations is the marking of candidates' scripts. The reduction of the number of PSLE question papers means that emphasis in the examination has shifted from summation to selection. To ensure fair selection, correct data must be obtained and processed accurately. The processing speed must be high enough to warrant timely delivery of the information to the decision makers (e.g. selectors). Both the data and information generated need to be stored in a form appropriate for easy retrieval.

It was in view of these demands that the National Examinations Council of Tanzania, with the aid of an IDA loan, bought a computer complex in 1985. But to acquire a computer unit is one thing and to be able to use it effectively is another. It was planned that PSLE scripts would be marked by a computer using optical mark readers and that thereafter all the data would be processed by the computer. To achieve this one requires trained personnel to handle the computer software and hardware. To date NECTA has not started marking PSLE scripts by computer for lack of sufficient manpower resources both in the schools and at NECTA headquarters. However, the Department of Research and Evaluation on its own initiative has embarked on keying the massive data for the purpose of storing and obtaining valuable statistical parameters.

At present, the marking and processing is done manually. However, precautionary measures are taken during marking to ensure that maximum reliability of the data obtained is achieved. This is accomplished mainly by using checkers at every stage of the entire marking process which includes marking, counting of marks, entering of marks in consolidated mark sheets, addition of marks and filing of consolidated mark sheets. The main consumers of PSLE data are the Regional Education Officers (REOs) and the Ministry of Education and Culture. To avoid irregularities during selection, NECTA keeps the carbon copy of all the PSLE raw marks recorded in the consolidated mark sheets (CMS). The original CMS and the scripts are returned to REOs who, after completing the selection exercise (based on the quarter system), carry out an evaluative analysis of performance of their candidates in their respective regions. These evaluative reports are used to guide or counsel the teachers in the field so that they may improve their teaching and thereby candidates' performance.

Concluding Remarks

Hundreds of thousands of pupils complete primary education annually. It is disturbing to note that only six percent (6%) are selected to join public or government secondary schools. No doubt, an examiner always faces difficult choices. Should the examiner set questions to cater for the upper group only? Should he/she consider the majority only? Or should he/she strike a balance by including items for both groups?

3.8.4 Primary School Leaving Examination 1994 - General Knowledge Paper (Section IV: Science), (English Translation)

<u>**THE UNITED REPUBLIC OF TANZANIA**</u>

<u>**NATIONAL EXAMINATIONS COUNCIL**</u>

<u>**PRIMARY SCHOOL LEAVING EXAMINATION 1994**</u>

<u>**GENERAL KNOWLEDGE**</u>

<u>Section IV: SCIENCE</u> (Choose the letter of the correct answer)

31. Blood flowing out of the heart to other parts of the body normally has

A. a lot of humidity
B. a lot of oxygen
C. no carbon dioxide
D. little oxygen
E. a lot of carbon dioxide

32. The earth's rotation around its own axis brings about

A. seasons of the year
B. eclipse of the sun
C. day and night
D. eclipse of the moon
E. high and low sea tides

33. An animal has lungs just like a fish has

A. gills
B. fins
C. scales
D. skin
E. mouth

34. Excretion is one of the characteristics of living things. Other characteristics are:

A. Hearing and seeing
B. Hearing and responding to stimuli
C. Respiring and growing
D. Eating and speaking
E. seeing and responding to stimuli

35. The type of food that is synthesized in the green parts of plants is

A. protein
B. carbohydrates
C. vitamins
D. fats
E. salts

36. One of the properties of loam soil is

A. inability to allow water to pass through
B. allowing water to pass faster than in sand
C. allowing water to flow through it as fast as it does in sand
D. allowing water, when in excess, to flow through it
E. allowing less water to pass through than in sand

37. The source of humus that is present in the soil is

A. broken down rocks
B. insects living in the soil
C. remains of dead animals
D. remains of dead plants
E. remains of dead leaving things

38. The group of foods which provide energy to the body are

A. rice and potatoes
B. fruits and beans
C. spinach and cowpeas
D. cowpeas and fats
E. meat and fish

39. Examine the following diagram carefully and then answer the question below:

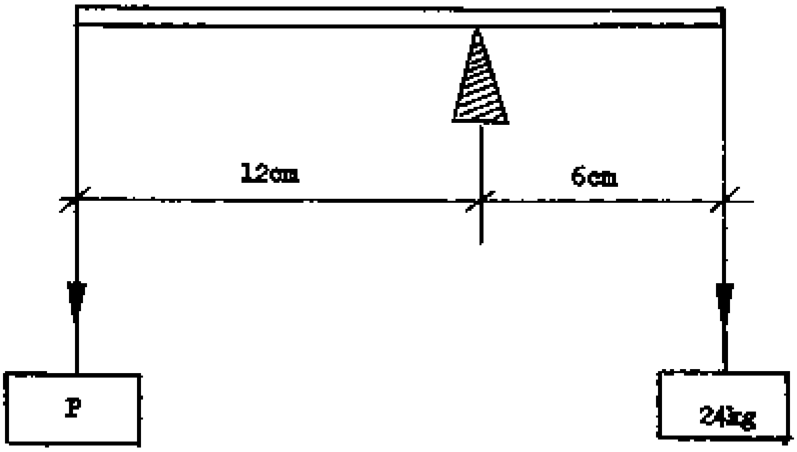

If the beam lever is in balance, the value of P in Kg is

A. 6
B. 18
C. 24
D. 30
E. 12

40. The film in a camera is like which part in the human eye?

A. Retina
B. Pupil
C. Choroid
D. Lens
E. Iris

41. For a physical object to be seen it must

A. reflect light
B. emit light
C. block light
D. transmit light
E. absorb light

42. Magnetic force is always accompanied by the following:

A. light
B. heat
C. electricity
D. wave
E. wind

43. A person standing in stagnant water without wearing shoes is most likely to be infected with

A. tape worms
B. bilharzia
C. diarrhoea
D. malaria
E. cholera

44. Which of the following is a physical change?

A. Dissolving sugar in water
B. Burning of kerosene
C. Souring of milk
D. Burning of candles
E. Rusting of iron

45. Which stage in the life cycle of a mosquito is most vulnerable by use of kerosene?

A. Egg
B. Tad-pole
C. Lava
D. Pupa
E. Adult

46. Examine the following food chain in a certain conservation area:

LIONS $\rightarrow$ ANTELOPES $\rightarrow$ GRASSES

If all lions migrate to other areas,

A. grasses will increase
B. grasses will decrease
C. grasses will remain the same
D. all antelopes will die
E. antelopes will decrease

47. Which of the following characteristics distinguishes amphibia from other animals?

A. Laying eggs, poikilothermic, does not suckle the young ones
B. Laying eggs, homoithermic, does not suckle young ones
C. Laying eggs, leads both aquatic and terrestrial life
D. Suckles young ones, homoithermic, hairy body
E. Laying eggs, breathing through spiracles, body composed of three main parts

48. Sun hemp (marijuana) is among the plants which improve the fertility of the soil. Other plants are:

A. cocoyam, potatoes
B. beans, cassava
C. potatoes, cassava
D. beans, cowpeas
E. cowpeas, potatoes

49. Which of the following sequences causes rainfall?

A. Rain $\rightarrow$ ocean $\rightarrow$ water vapour $\rightarrow$ clouds
B. Ocean $\rightarrow$ water vapour $\rightarrow$ clouds $\rightarrow$ rain
C. Water vapour $\rightarrow$ clouds $\rightarrow$ ocean $\rightarrow$ rain
D. Ocean $\rightarrow$ rainfall $\rightarrow$ water vapour $\rightarrow$ clouds
E. Water vapour $\rightarrow$ ocean $\rightarrow$ clouds $\rightarrow$ rain

50. One of the functions of blood in the human body is to

A. increase heat
B. decrease heat
C. excrete wastes
D. transport oxygen
E. digest food substances

3.8.5 Primary School Leaving Examinations 1993 - General Paper 1 (Section III: Science), (English Translation) and - General Paper 2 (Section III: Science), (English Translation)

THE UNITED REPUBLIC OF TANZANIA

NATIONAL EXAMINATIONS COUNCIL

PRIMARY SCHOOL LEAVING EXAMINATIONS 1993

GENERAL PAPER 1

SECTION III: SCIENCE

Choose the most correct answer and write down the letter corresponding to that answer in front of the question number.

16. Which one of the following refers to movement in plants?

A. Dispersal of seeds by wind
B. Growing away from light
C. Absorption of water from the soil
D. Spreading of branches in the air
E. Growing of shoots away from the stem

17. Which one of the following refers to features of insect pollinated flowers?

A. Production of abundant pollen
B. Production of odourless pollen
C. Brightly coloured
D. Faintly coloured
E. Faint odour

18. Branches are among the main parts of a plant. Other parts are:

A. Stem and fruits
B. Fruits and flowers
C. Roots and leaves
D. Roots and stem
E. Flowers and stem

19. Which type of blood cells are responsible for the transfer of oxygen in the animal body?

A. White blood cells
B. Blood platelets
C. Plasma
D. All blood cells
E. Red blood cells

20. The hawk is a vertebrate animal. Others are:

A. Snake, lizard, rat
B. Rat, snail, snake
C. Rat, bat, tortoise
D. Small fish, millipede, chameleon

21. Villi are part of the digestive system/Other structures are:

A. Heart, pancreas
B. Lungs, kidneys
C. Pancreas, kidneys
D. Tongue, large intestine
E. Small intestine, pancreas

22. The lung is one of the organs of the excretory system. Other organs are:

A. Ribs and kidneys
B. Skin and kidneys
C. Ribs and heart
D. Heart and kidneys
E. Ribs and chest

23. Which of the following sets of characteristics can be used to classify animals as reptiles?

A. They lay eggs, respire by spiracles, have three main body parts
B. They suckle their young, are warm blooded
C. They lay eggs, are cold blooded, do not suckle their young
D. They lay eggs, suckle their young, have hairy bodies
E. They lay eggs, live in water and on land

24. After Juma had analysed the soil of his farm, he found out that it was acidic. What corrective measures should be taken?

A. Leave the farm fallow
B. Add a neutralizing chemical
C. Loosen up the soil
D. Practice flat cultivation
E. Select a particular crop for planting

25. The vulture is dependent on plants in that:

A. It uses leaves to build its nest
B. It lays its eggs in tall trees
C. It eats the carcasses of herbivores
D. It hides in dense forests
E. It spends the nights in tall trees

26. Calcium is one of the nutrient elements contained in CAN Fertilizer. What are the other elements?

A. Ammonia, Nitrogen
B. Ammonia, Nickel
C. Acid, Nitrogen
D. Aluminium, Nitrogen
E. Ammonia, Neon

27. Consider the following practices:

(i) Boiling meat until it is well cooked
(ii) Covering the mouth with a handkerchief when coughing

If you observe these practices, you will be taking measures to control one of the following sets of diseases:

A. Measles, roundworms
B. Cholera, pneumonia
C. Dysentery, cholera
D. Measles, pneumonia
E. Roundworms, T.B.

28. In the human body, Vitamin B^3 and D prevent the following diseases:

A. Night blindness, pellagra
B. Night blindness, beriberi
C. Night blindness, scurvy
D. Beriberi, scurvy

29. When two substances are mixed, a chemical change takes place if there occurs a change in:

A. Composition
B. Light
C. Sound
D. Matter
E. Heat

30. If the upward force of water is less than the weight of a canoe, the canoe will:

A. Sway
B. Capsize
C. Sink
D. Be pushed up
E. Float

31. The force that enables us to walk without falling is:

A. Magnetical
B. Electrical
C. Gravitational
D. Frictional
E. Adhesional

32. How many degrees centigrade (°C) are equivalent to 158°F?

A. 58
B. 98
C. 70
D. 126
E. 190

33. In order to load sacks of maize into a lorry, which of the following machines would you use?

A. Pulley and wrench
B. Piece of timber and ladder
C. Ladder and a pole
D. Roller and ladder
E. Pulley and a pole

34. Soap is made by boiling a base with:

A. An acid
B. An alcohol
C. Spirit
D. Fat
E. Salt

35.

In the above diagrams **A** and **B** are bars of magnets. If side N of Bar **A** is brought close to side N of bar **B**, the bars will:

A. Repel
B. Attract each other
C. Join up
D. Move toward one side
E. Break

THE UNITED REPUBLIC OF TANZANIA

NATIONAL EXAMINATIONS COUNCIL

PRIMARY SCHOOL LEAVING EXAMINATION 1993

GENERAL PAPER 2

SECTION III: SCIENCE

Choose the most correct answer and write down the letter corresponding to that answer in front of the question number on the answer sheet.

16. Which one of the following is **NOT** a characteristic of living things?

A. Reproduction
B. Feeding
C. Decomposition
D. Growth
E. Response

17. Which of the following is a condition for seeds to germinate?

A. Soil
B. Organic manure
C. Fertilizer
D. Heat
E. Light

18. The seeds of "Mchunga" plant are dispersed by wind. Which of the following plants have seeds that are also dispersed in this way?

A. Kapok and cotton
B. Finger millet spinach
C. Spinach and tomatoes
D. Tomatoes and spinach
E. Tomatoes and castor

19. Which of the following are the three major parts of an insect?

A. Abdomen, head, wings
B. Head, abdomen, legs
C. Spiracles, thorax, abdomen
D. Wings, thorax, abdomen
E. Head, thorax, abdomen

20. Which of the following are developmental stages in the life cycle of a mosquito?

A. Egg, pupa, larva, adult
B. Pupa, egg, larva, adult
C. Egg, larva, pupa, adult
D. Larva, egg, pupa, adult
E. Pupa, larva, egg, adult

21. Sweating is one way through which waste products are excreted from the body. Other excretory means are:

A. Sneezing, breathing
B. Breathing, urinating
C. Spitting, urinating
D. Blowing the nose, breathing
E. Sneezing, crying

22. Which of the following sets of characteristics can be used to classify animals as MAMMALS?

A. They lay eggs, are cold blooded, do not suckle their young
B. They lay eggs, breathe through spiracles, have bodies divided into three main parts
C. They lay eggs, are warm blooded, do not suckle their young
D. They suckle their young, are warm blooded, have hairy bodies
E. They live in water and on land, they lay eggs

23. After Pazi had conducted an experiment he found out that the soil in his farm could not drain out water easily. What corrective measures should be taken?

A. Select a crop for planting
B. Loosen up the soil
C. Add a neutralizing chemical
D. Practice flat cultivation
E. Follow recommended number of times of weeding

24. Study the following diagram and then answer the question that follow.

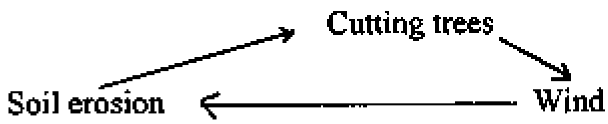

Which of the following practices would you undertake to arrest persistent occurrance of the situation?

A. Constructing ridges
B. Planting trees
C. Filling up gullies with soil
D. Leaving the field fallow
E. Practice flat cultivation

25. Apart from cow peas, what other plants enrich the nutrient status of the soil?

A. Crotalaria, potatoes
B. Potatoes, pigeon peas
C. Crotalaria, beans
D. Beans, cassava
E. Grams, cocoyams

26. Consider the following practices:

(i) Killing of snails by chemicals
(ii) Constructing and using latrines properly

If you observe these practices, you will be taking measures to control one of the following sets of diseases:

A. Measles, roundworms
B. Pneumonia, bilharzia
C. Round worms, dysentery
D. Pneumonia, measles
E. Bilharzia, dysentery

27. In the human body vitamins C and B^1 prevent the following two diseases:

A. Beriberi, night blindness
B. Night blindness, scurvy
C. Rickets, pellagra
D. Scurvy, beriberi
E. Pellagra, scurvy

28. Which one of the following properties of light is manifested by the eclipse of the sun?

A. Light travels in a straight line
B. Light is reflected by an object
C. Light is absorbed by an object
D. Light bends when passing through an object
E. Light passes through an object

29. Which type of lenses should a short sighted person wear to correct the defect?

A. Convex
B. Semi-convex
C. Round
D. Concave
E. Semi-concave

30. The functions of mabbles ("goroli") in a machine are to:

A. Lubricate the machine
B. Reduce speed of the machine
C. Stop movement of the machine
D. Reduce friction in the machine
E. Raise temperature of the machine

31. How many degrees Fahrenheit (°F) are equivalent to 40°?

A. 72
B. 112
C. 80
D. 136
E. 104

32. How will you rescue a person affected by an electric shock?

A. Pushing him using hands
B. Pushing him using legs
C. Pushing him with a dry wooden pole
D. Pushing him with an iron rod
E. Pushing him with a wet wooden pole

33. When lighting a torch, which of the following forms of energy is changed?

A. Electrical
B. Chemical
C. Static
D. Kinetic
E. Magnetic

34. One of the ways of obtaining salt from a salt solution is by:

A. Freezing
B. Filtering
C. Decanting
D. Dissolving
E. Heating

35. Which of the following refers to a change in state?

A. Decaying of fruits
B. Formation of steam
C. Burning of paper
D. Rusting of iron
E. Souring of milk

3.9. Uganda

3.9.1. Overview

End of Primary School Examination

1.	**Title of examination:**	Uganda Primary Leaving Certificate Examination
2.	**Amount of fees charged:**	≈ US$2
3.	**Examination after years in primary school (6, 7, 8 years):**	7 yrs
4.	**Children's entry age in primary school:**	6-7 yrs
5.	**Number of pupils sitting examination in 1994:**	162,695
6.	**Examination subjects offered:**	6 subjects in 4 papers: • English • Mathematics • Social Studies/Religious Education • Basic Science & Health Education (incl. Agriculture)
7.	**Language of examination:**	English
8.	**Institution setting the examination questions:**	Uganda National Examinations Board (UNEB)
9.	**Have there been any reforms in the examination questions?**	Yes
	When? (year)	1983
	What kind?	Replacement of multiple-choice questions by structured questions.
10.	**Stages of development of examination questions (please describe):**	• Setters' workshop is organized and invited setters receive basic training through presentations.

		• Setters write items which are shredded at the workshop. • Shredded items are later moderated. • Items accepted after moderation are compiled into papers for pre-testing. • Analysis of pre-tested items is done and some items may be remoderated. • Items are banked for use when required.
11.	**Type of examination questions and distribution of different kind of questions.**	Only structured questions made up of 50% recall and comprehension and 50% higher-order questions.
12.	**Is continuous assessment incorporated in the final examination?**	Yes [ ] No [x]
13.	**Are examination items pretested?**	Yes [x] No [ ]
14.	**Which professional groups are involved in setting the examination questions?**	• Primary school teachers • School inspectors • Tutors of TTCs • Uganda National Examinations Board (UNEB) staff
15.	**Are the same professionals who set the examination questions involved in marking papers?**	Yes [x] No [ ]
16.	**How are examination results used for improving teaching in primary schools?**	A report on the work of candidates is sent out to schools, pointing out weaknesses in teaching, pupil misconceptions as seen in the scripts and areas that need more indepth approach.
17.	**To what other uses are the examination results put?**	• Selection into post primary institutions. • Certification.
18.	**Main problem with Primary School Leaving Examinations?**	• Large entry which influences cost-effectiveness. • Cost of presenting items. • Tendencies to cheat by pupils and teachers.

3.9.2. Item Writing for Primary Leaving Examinations in Uganda

by Dan Nokrach Odongo, Uganda National Examinations Board

Primary education in Uganda at present ends after 7 years of formal schooling. At the end of this period, pupils sit for the Uganda Primary Leaving Certificate Examinations administered by the Uganda National Examinations Board (UNEB).

The examinations consist of 4 written papers viz. English Language, Mathematics, Social Studies and Religious Education and Basic Science and Health Education. The results of the examination are used by the Ministry of Education and Sports for placement/selection of candidates for post-primary institutions. The results also show attainment of a level of education expected after 7 years. Schools also get a feedback through reports on the work of candidates (see chapter 4: Examples of Follow-up Communications after the Examinations).

Background History of Science Syllabus

Before 1981, the Primary Leaving Certificate Examinations were administered by the Ministry responsible for Education. Science was examined as part of a General Paper of which it comprised 25%. The Chief Examinations Secretary received whole paper drafts from setters, who were usually teachers in primary schools and tutors and lecturers in teacher training colleges. The draft questions were then moderated by the Chief Examinations Secretary, the Inspector of Schools (Primary) and the Education Officer (Primary) at Ministry Headquarters.

The items generated were all of the multiple-choice type.

The break-up of the East African Examinations Council occasioned the formation of UNEB which then took over the primary examinations from 1981. The section moved to UNEB from the Ministry of Education. In 1982 changes were made in the method of generating items. An item writers workshop was organized and participants set items. The Research Department of UNEB shredded the items. A pretest of the shredded items was organized. These measures were introduced to improve the validity, reliability and security of the items.

There was also a change in the format of the Science section of the General Paper. Subsection I was made up of 15 questions of the multiple-choice type and subsection II had 6 simple structured questions.

In 1981 the Ministry of Education decided that, in order to promote Science, the Curriculum was to be expanded. The General Paper was already too loaded and a decision was taken to split it. Two papers were born out of this; Social Studies and Religious Education, and Science. The National Curriculum Development Centre (NCDC) was asked to develop a syllabus for the Science paper. The examination paper then consisted of 40 multiple-choice questions and 15 structured questions. The new Science paper was presented for the first time in 1983, allowing for a two year period for schools to note the change.

In 1984 the use of multiple-choice questions was abolished. It was felt that multiple-choice items did not encourage originality and expression on the part of candidates. The method of testing also lent itself to easy cheating by candidates. External assistance from teachers to candidates was also easy. Another problem was the lack of trained item writers - items tended to test factual knowledge only. Instead, 40 simple structured questions formed the first part and 15 more difficult ones formed the second part. By 1988 the method of item generation whereby writers submitted complete drafts was beginning to be discarded in order to improve the security of the items. The method was finally abolished in 1990.

In 1990 the Science paper underwent another major change. The syllabus was expanded to include Health Education. It was felt that pupils leaving school after the primary cycle needed to be equipped with knowledge and ability to take care of their own health and that of the community in which they live. With the assistance of UNICEF, the Science syllabus was expanded and has become Basic Science and Health Education with Health Education weighted at about 50% of the paper. The format remained the same - 40 simple structured questions (40 marks) in Section A and 15 more difficult ones (60 marks) in Section B. This paper was presented for the first time in 1991.

The Current Situation

Since 1991, items have been generated at item writers workshops. The workshop is residential, lasts 10 working days, and is organized annually.

Participants invited are classroom teachers, lecturers and tutors in teacher-training colleges, inspectors of schools in charge of primary education, curriculum experts from NCDC and health education experts from the UNICEF Uganda country office. People who are not involved in teaching other than those above are not invited. The identified participants are then vetted and cleared by the Examinations Security Committee of UNEB. Just before the 1991 workshop, UNEB organised a major item writers course conducted by senior officers of the Board to improve on the writers' abilities and, consequently, the quality of the items.

At the workshops, participants write items rather than whole papers. The items are written according to a not too rigid table of specification (see Table of Specification). This is followed by shredding of items at the workshop and later moderation of the items in UNEB offices by a team of moderators under the guidance of the subject secretary, Test Development. The items are brought together in several parallel papers for the purpose of pretesting. Schools to be used for the pretest are randomly chosen from three categories: urban, semi-urban and rural. The result of the pretesting exercise is analysed to check the behaviour of the questions - their reliability and validity indices.

The abilities tested are knowledge, comprehension and application. The higher abilities - analysis etc. - are not expected at this level.

Accepted questions are banked using the banking form (see Item Banking Form). Banked questions are ready to be used the following year.

Proposals for Improvement of the Science Paper

The NCDC and the Ministry responsible for Education have recommended that a Practical Basic Science and Health Education paper be set. A sample paper has been submitted to UNEB. The constraints here are the volume of equipment needed at this level - about 180,000 candidates. Most schools do not have laboratories or workshops, or science equipment. The financial aspect is the other big constraint. Whereas the idea has, at the moment, been shelved, committees in both UNEB and NCDC are working towards the goal of having a practical paper included alongside the theory one. Further training of item writers and the development of tests is planned.

Uganda National Examinations Board
Primary Leaving Examination/Table of Specification

	Section A			Section B		
Unit	K	C	A	K	C	A
1. Our Environment	-	-	-	-	1	-
2. Changes in our Environment	-	1	-	-	-	-
3. Crop Husbandry	2	-	-	-	-	1
4. Animal Husbandry	1	1	1	-	-	-
5. Systems of Mammals	2	1	1	-	1	-
6. Our Health	1	1	-	-	-	-
7. Common Diseases	2	-	-	-	-	1
8. Air/Water and Weather	1	1	1	-	1	-
9. Food and Nutrition	2	1	-	-	1	-
10. Classification and Study of Living Things	1	1	-	1	-	-
11. The Flowering Plants	1	-	1	-	-	-
12. Measurement	-	1	-	-	-	1
13. Forms of Energy	3	1	-	1	-	-
14. Simple Machines	-	1	-	1	-	-
15. Accidents and First Aid	1	1	-	1	-	-
16. Family and Social Problems	1	1	1	1	-	-
17. Sanitation	-	1	-	1	-	-
18. Immunisation	-	1	-	1	-	-
19. Primary Health Care	2	1	-	1	-	-
Total	20	15	5	8	4	3

Note: Section A = simple structured questions; Section B = more difficult questions; K = Knowledge; C = Comprehension; A = Application

IBF/1

ITEM ID
LEVEL ____________

Uganda National Examinations Board

Item Banking Form

Subject ____
Topic ____
Sub-Topic ____
Objective ____
Ability Level ____
Author/Source ______________________________ **Year** ______________

Usage Data

	Year	P-value	D-value	V-index	R-index	Remarks
1						
2						
3						
4						
5						

Question:

3.9.3. The Uganda Primary Leaving Certificate Examination in Basic Science and Health Education

by Zacky W. Eriko, Uganda National Examinations Board

1. Introduction

Several forces have greatly contributed to our current practices as regards the Uganda Primary Leaving Certificate Examination (PLE), the main features will be described later. The main forces include:

(1) Criticisms of the PLE

The commonest criticisms levelled against the PLE include:

• that it has made teaching be geared towards passing the examination only - i.e. the »examination tail« wagging the »curriculum dog« in that whatever is not examined at PLE remains either untaught or taught poorly;

• that most of the questions were of the »recall« type, testing lowest cognitive levels, hence encouraging rote learning rather than understanding or other higher cognitive abilities and skills;

• that the examination tended to favour urban school children and discriminated against rural schools;

• that too much was being demanded from the candidates such that teaching has turned into coaching; that this is done seven days a week, from January to November, hence learning becomes a torture rather than a pleasant experience for children, exerting severe physical and psychological strains on children and financial strains on parents;

• Some people even believe that a very limited area of the primary school curricula is being tested; such people tended to argue that the PLE should be expanded to cover subjects like Music, Physical Education, Art and Crafts, etc.

(2) Examination Malpractices

Over the past few years, the Board had noticed that malpractices in the examination at primary level were becoming an issue of great concern. The public on their part have not minced words in accusing the staff of the Board (in most cases erroneously) for the malpractices. They have always shouted »leakage« at every case of examination malpractices. The malpractices in the PLE fall in three broad categories: Irregularities, Misconduct and Dishonesty or Cheating. The last category, the most serious of the three, is composed of: leakage, collusion, copying, external assistance, impersonation, smuggling and substitution - of all these, the public is not aware of. They persistently think that every case is due to leakage of exams.

(3) Psychometric Considerations

As more and more of the Board's staff became acquainted with the modern techniques of measurement and evaluation, but educational assessments in particular, shortcomings were identified and changes introduced.

2. Generating Test Items and Preparation of PLE Basic Science and Health Education Paper

It is a matter of fact that setting good test items cannot be done by accident. It requires special skills that can only be acquired through training and experience. In this regard, therefore, all those experienced and dedicated teachers used by the Board as setters in the PLE have had to be carefully identified, vetted, trained and tested before being commissioned to do the job.

Due to some of the reasons given already above, the Board employs two methods of generating items that go into the PLE Basic Science and Health Education Paper:

(1) Through different people being asked to set parallel papers based on a specification grid. This has the advantage of proper balance of the various aspects of the syllabus and coherence.

(2) Through item-writers workshops in which active classroom teachers at that level, inspectors, subject specialists at the National Curriculum Development Centre and tutors in Primary Teachers' Colleges participate.

The emphasis in both cases is on having been subjected to training on test construction techniques by the Board first.

The items so generated, whether through parallel papers or workshops, or later in schools are shredded/moderated compiled into fresh papers pre-tested and analysed for level of difficulty as well as discrimination ability before being banked as items (not as papers).

At a later stage, the banked items are used to compile at least three parallel papers which are looked at by a moderation panel and later vetted and re-adjusted by a small group of the top secretariate. In this way loop-holes which could result in possible leakage of the exam are totally sealed.

3. Format of the Examination and its Administration to Candidates

(1) Format of the paper: The instructions to the candidate on the front page of the exam paper clearly state that the paper has two sections: A (made of 40 short answer questions - 40 marks); and B (15 questions - 60 marks).

The questions in section A cover a much wider area and they all carry equal marks. Those in section B cover fewer areas but in depth. The whole paper is for 2 hours 15 min. It covers Physical and Biological Sciences, Agriculture and Health Education.

(2) Administration of the PLE: Schools within a reasonable radius are grouped together at one centre and each of the examination rooms used must have representatives from each of the schools sitting there. Supervisors at each centre are appointed by the Board and these are usually qualified and experienced secondary school teachers and tutors of PTCs. The invigilators, on the other hand, are primary school teachers, appointed by the District Inspector of Schools but not from the schools sitting at a particular centre. Candidates' passport size photographs are used to identify the candidates. Through these and other measures not discussed here, the Board has been able to drastically minimize examination malpractices in the PLE.

4. Grading/Award of Certificates

The Board does not have a pre-determined boundary for a pass mark. The decision of cut-off points at grades 2, 6 and 8 are arrived at during an awards meeting in which the Chief Examiner of the paper assesses the level of difficulty of the paper (item by item) and performance by the candidates. The remaining intermediary scales on a modified 9-point scale are then worked out statistically, such that the best score is a One and the worst a Nine.

The certificate awarded is determined by the total aggregate score in the four papers and range from division 1 to 4. Those below that are ungraded.

5. Proposed Reforms

Uganda is about to embark on a massive reform of its education system at both primary school and Primary Teachers' Training levels. The National Examining body is seen to be playing a central role in this proposed World Bank financed reform. Some of the specific roles that the Board will be expected to play include:

- Introducing and incorporating continuous assessment into the examination system;
- Conducting national assessment of educational progress;
- Increasing the level of test items in the PLE to those testing higher cognitive abilities as well as relating questions to live situations; and
- Improving on feedback systems to schools and parents.

3.9.4 Uganda Primary Leaving Certificate Examination 1994 - Basic Science and Health Education

UGANDA NATIONAL EXAMINATIONS BOARD

UGANDA PRIMARY LEAVING CERTIFICATE EXAMINATION

BASIC SCIENCE AND HEALTH EDUCATION

Time Allowed: 2 hours 15 minutes

Name..

Index No								

DO NOT OPEN THIS BOOKLET UNTIL YOU ARE TOLD TO DO SO

Read the following instructions carefully:

1. The paper is made up of two Sections: A and B.

2. Section A has 40 short-answer questions (40 marks).

3. Section B has 15 questions (60 marks).

4. Attempt **ALL** questions. All answers to both Sections A and B must be written in the spaces provided.

5. All answers must be written in blue or black ball-pen or ink. Only diagrams and graph work may be **do**ne in pencil.

6. Unnecessary alteration of work will lead to loss of marks.

7. Any handwriting that cannot easily be read may lead to loss of marks.

FOR OFFICIAL USE ONLY			
SECTION	EXRS MARKS	T/L MARKS	OFFICE
A			
B			
TOTAL			

 Turn over

SECTION A

1. How does uncontrolled burning affect our environment?

....

2. State one method by which breast milk protects newly born babies.

....

3. In the space provided below, draw a simple diagram of a molar tooth.

4. State one way in which earthworms are important to a farmer.

....

5. How does the sun-ray help in the formation of rain?

....

6. What takes place in the lungs when one breathes in and out?

....

7. John is suffering from a headache. The nurse wishes to measure John's body temperature. Why does she put the thermometer under John's arm-pit and not on his head?

....

8. How does government control the spread of a cattle disease when it breaks out in an area?

....

9. How does the skin of a person maintain his body temperature on a hot day?

....

10. Why is it not necessary for a VIP latrine to have a lid for the hole?

....

11. Why is it not good to pour paraffin into a pit latrine?

....

12. A 14 year-old child who is usually well behaved suddenly becomes rude to the parents. State one possible change in the child responsible for such a behaviour.

....

13. What is the advantage of family planning to a mother?

....

14. Why would the control of AIDS be easier than that of malaria?

....

15. Why does milk left in the open become sour after some time?

....

16. A child is found to be dehydrated. What is a possible cause of this dehydration?

....

17. What causes anaemia?

....

18. How does smoke from a fire in a room reach other areas in the same room?

....

19. A block of wood of volume 24 cm weighs 36 grams. What is its density?

....

20. A female fish lays eggs in the water. How are these eggs fertilized?

....

21. What type of change takes place when a candle melts?

....

22. Pregnant women are advised to receive immunization against Tetanus. What is the importance of this immunization to the unborn child?

....

23. State any one first aid you would give to a patient who is bleeding from a deep cut on the leg.

....

24. Bob and Agnes are sitting, balanced, on a sea-saw as shown in the diagram below.

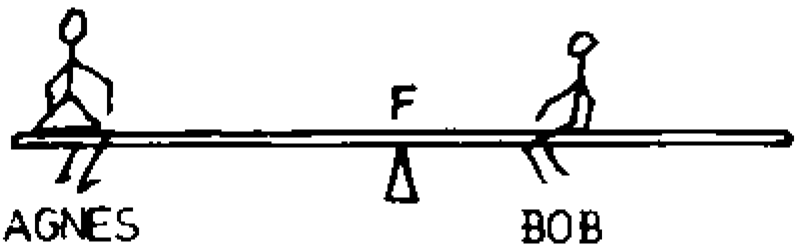

How does the diagram show that Bob is heavier ?

....

25. Why does the heart of a person who is running beat faster than normal?

....

26. State one advantage of crop-rotation.

....

27. What is the difference in movement between a ball and socket joint and a hinge joint?

....

28. Why should materials made of iron be covered with paint?

....

29 Fish, reptiles and birds are vertebrates that lay eggs. State one other characteristic which is common to them.

....

The diagram below shows an experiment used to find the volume of a regular solid block. Use it to answer questions **30, 31** *and* **32**.

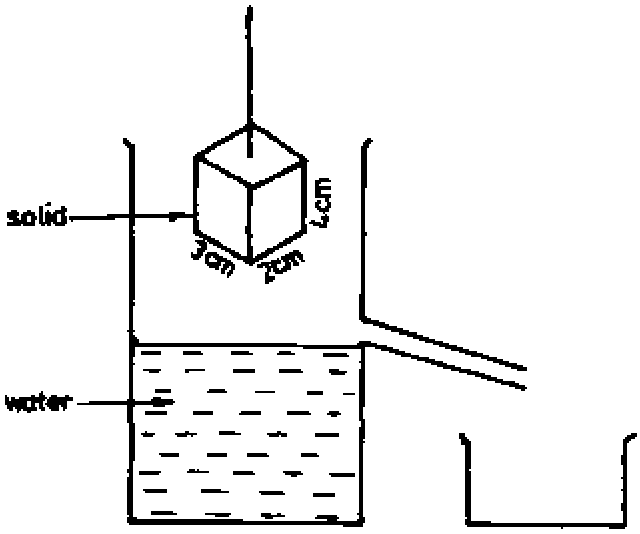

30. What is the volume of the block?

31. If the solid block is lowered into the overflow can, what volume of water will be displaced?

32. How would you confirm your answer to question 31 above?

....

The diagram below shows two boys, Musa and Juma, pulling pieces of wood of equal weights up a wall. Use it to answer questions **33** *and* **34**.

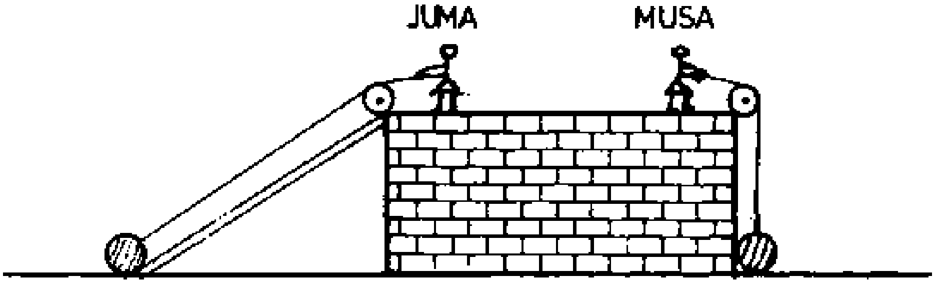

33. Which boy will use less force to pull the wood?

....

34. Explain your answer to question 33 above.

....

35. Why is resting important for the health of a person?

....

36. Muhima is sitting on a chair inside a room. Both his feet are bare. His left foot is resting on a bare cemented floor. The right foot is resting on a mat. Why would Muhima's left foot feel colder than the right foot?

....

37. Why is smoking of tobacco harmful to the body?

....

38. What is the main purpose of marriage?

....

A student was finding out the conditions needed for germination of beans to lake place. She set up the experiment as shown in the diagram below. Use it to answer questions **39** *and* **40**.

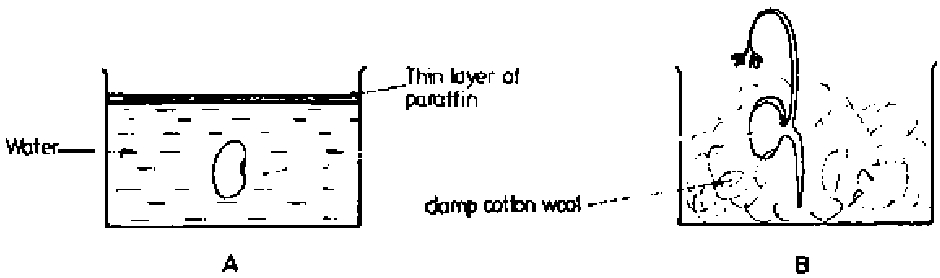

39. Why did the seed in **A** not germinate?

....

40. What is the purpose of the wet cotton wool in **B**?

....

SECTION B

41. Use the diagram below to answer the following questions.

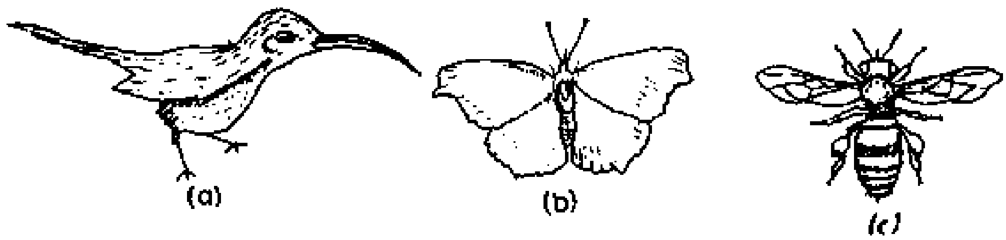

(a) In what ways do these animals have similar structures for:

(i) feeding?
....
(ii) pollination?
....
(iii) movement?
....

(b) How does one of the animals differ from the other two in its life history?
....

42. In the circuit below, when the switch was closed, the bulb lit.

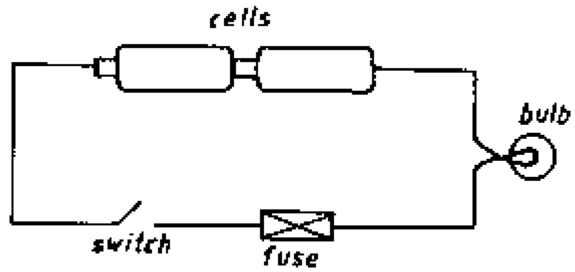

(a) How would you increase the brightness of the light in the bulb?

....

(b) After a short time, when the switch was still on, the light in the bulb went off. State three possible causes for the light going off.

(i) ....
(ii) ....
(iii) ....

43. (a) A farmer who practises mixed cropping has the following crops to plant: beans, cassava, groundnuts and potatoes.

(i) Which two crops would be advisable for the farmer to plant together?
....

(ii) Give a reason for your answer.
....

(b) The farmer used a garden for planting maize crop only for three consecutive years (planting seasons). During the harvest in the third year, he noticed a drop in the maize yield.

(i) Suggest a reason for the drop in the maize yield.
....

(ii) How can the farmer improve his maize yield in the same garden without using fertilizers?
....

44. The diagram below is of a human heart. Use it to answer the questions which follow.

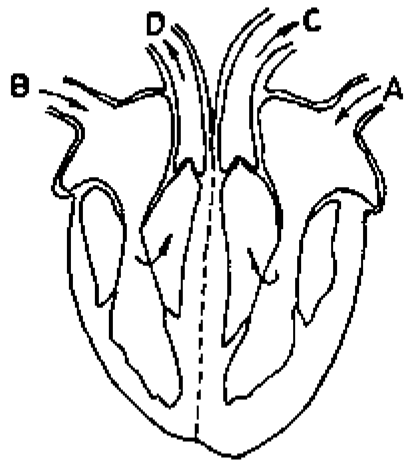

(a) What is the function of valves in the heart?

....

(b) What is the difference between the blood which enters the heart through **A** and that through **B**?

....

(c) After leaving the heart at **C** and **D** where does the blood go?

(i) **C**: ....
(ii) **D**: ....

45. In the table below, some of the diseases are given with their symptoms and prevention/control. Study it and fill in the missing information.

Name of **Disease**	**Symptoms**	**Prevention/Control**
Sleeping sickness	loss of body weight, drowsiness, swelling in the joints	
Common cold (flu)		Isolation, Avoid infected people
Measles	rash on body, high fever, cough, red eyes, sore in mouth diarrhoea and vomiting.	
	mild redness and itching of eyes, pus in eyes after sleep, scarring.	washing of eyes, avoiding to share articles with sick persons, e.g. basin towel. Medical treatment

46. (a) Why should water not be used to put out fire from petrol which is burning?

(i) ....
(ii) ....

(b) Suggest two ways by which fires from petrol burning can be put out.

(i) ....
(ii) ....

47. The diagram below is of a flower. Use it to answer the questions which follow.

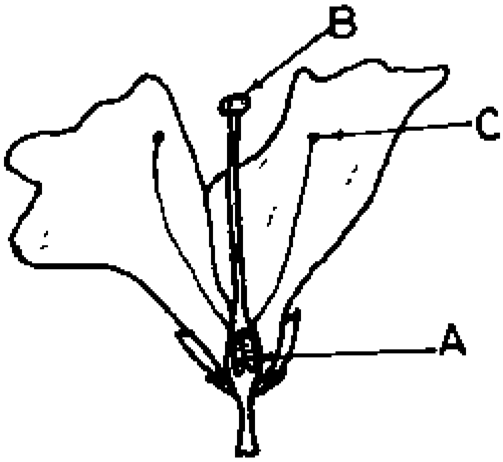

(a) What does the part labelled A become after fertilization?
....

(b) What is the difference in the functions of the parts labelled B and C?

(i) ....
(ii) ....

(c) Of what value are flowers to man?

48. When a drum is hit, you hear sound.

(a) How does the ear-drum help you to hear the sound?

....

(b) There is some wax in the outer ear. What is the function of the wax?

....

(c) What is the effect of too much wax in one's ear?

(i) ....
(ii) ....

49. (a) State two factors which should be taken into account when selecting site for building a house.

(i) ....
(ii) ....

(b) How does a well-built house contribute to the health of a family?

(i) ....
(ii) ....

50. The diagram below shows how seeds change into young plants. Use it to answer the questions which follow.

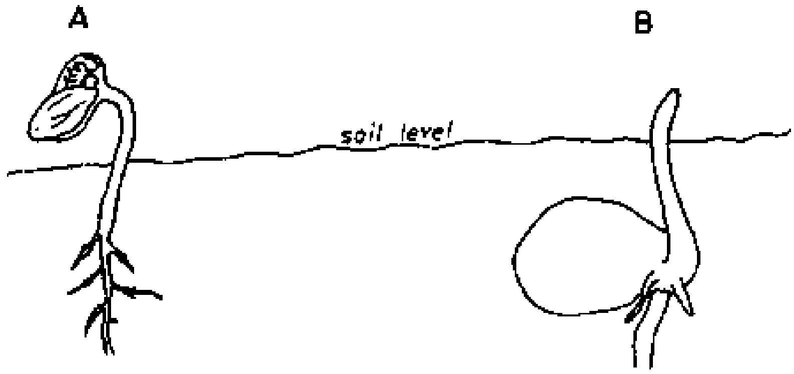

(a) What is the main difference between the type of germination shown in **A** and that in **B**?

(i) ....

(ii) ....

(b) Which of these two types of germination is more common in monocotyledonous plants?

....

(c) In what way does the location of the food store in **A** differ from that in **B**?

....

51. Use the diagram below to answer the questions which follow.

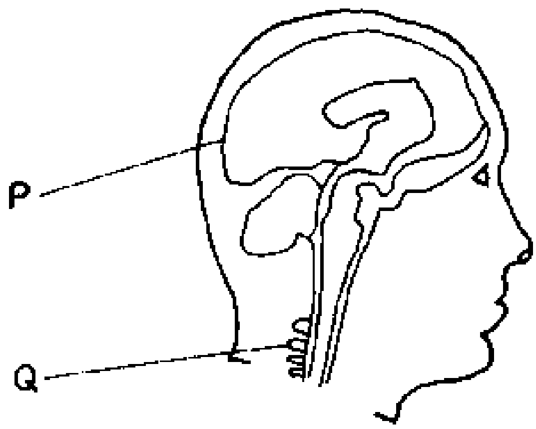

(a) What name is given to the part marked **P**?

....

(b) Give a function of the part marked **Q**.

....

(c) Name two sense organs shown in the diagram above, by which someone can tell that there is something burning.

(i) ....

(ii) ....

52. List A below gives two types of mosquitoes. The drawings in B give the larvae and adult stages of mosquitoes. Write the correct number of the drawing in B against the correct mosquito in list A. Each drawing in B can be used once, more than once or not used at all.

A
Anopheles ....
Culex ....

B

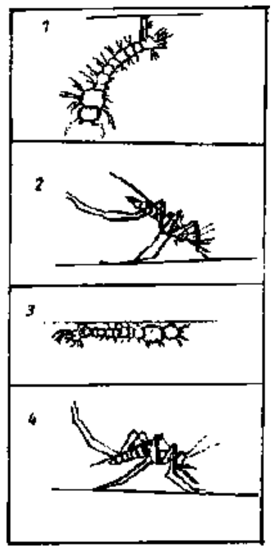

53. Nakato harvested her maize crop and dried it. She put the maize in a sack and stored it on the floor, in a corner of her bedroom. Akello also harvested and dried her maize crop. Then she hung the maize on cobs above a fire place in the kitchen.

(a) Explain why Akello would have better maize grains to plant in the next season.
....

(b) Give two ways in which Nakato can improve on her storage method.

(i) ....
(ii) ....

54. (a) What shows that air is matter?

(i) ....
(ii) ....

(b) A candle is lit and placed inside a container and sealed as shown in the diagram below.

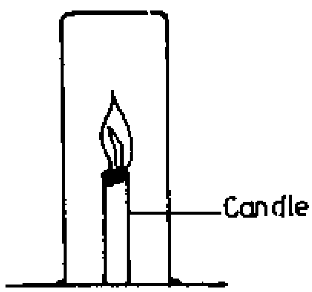

(i) Why does the candle continue burning for some time inside the sealed container?
....

(ii) Give a reason why the candle light goes off after some time.
....

55. (a) State four reasons why physical exercises are good for the body.

(i) ....
(ii) ....
(iii) ....
(iv) ....

3.9.5 Uganda Primary Leaving Certificate Examination 1993 - Basic Science and Health Education

UGANDA NATIONAL EXAMINATIONS BOARD

UGANDA PRIMARY LEAVING CERTIFICATE EXAMINATION

BASIC SCIENCE AND HEALTH EDUCATION

Time Allowed: 2 hours 15 minutes

Name...

Index No								

DO NOT OPEN THIS BOOKLET UNTIL YOU ARE TOLD TO DO SO

Read the following instructions carefully:

1. The paper is made up of Sections A and B.

2. Section A has 40 short-answer questions (40 marks).

3. Section B has 15 questions (60 marks).

4. Attempt **ALL** questions. All answers to both Sections A and B must be written in the spaces provided.

5. All answers must be written in blue or black ball-point pen or ink. Only diagrams and graph work may be done in pencil.

6. Unnecessary alteration of work will lead to loss of marks.

7. Any handwriting that cannot easily be read may lead to loss of marks.

FOR OFFICIAL USE ONLY			
SECTION	EXRS MARKS	T/L MARKS	OFFICE
A			
B			
TOTAL			

SECTION A

1. Jane put a bottle of soda in a bucket full of ice. Two hours later, she found that the soda was frozen and the bottle broken. Why did the bottle break?

....

2. What is the role of brightly coloured petals in pollination?
....

3. State one reason why loam soil is better than sandy soil for crop growing.

....

Use the drawing below to answer questions **4** *to* **8**.

4. Which of these animals lay eggs?

....

5. Which of these animals are cold-blooded?

....

6. Which one of these animals has no back-bones?

....

7. Which of these animals can fly?

....

8. Which one of these animals is a mammal?

....

9. Why would an egg from a layer not hatch into a chick after it has incubated for 21 days?

....

10. The chameleon is a slow-moving animal. State one way by which it protects itself.

....

11. Why is breast milk the best food for a baby of less than one year old?

....

12. Why should left-over food be properly covered?

....

13. What causes malaria?

....

The diagram below shows a set-up of an experiment and its results. Use it to answer questions **14** *and* **15**.

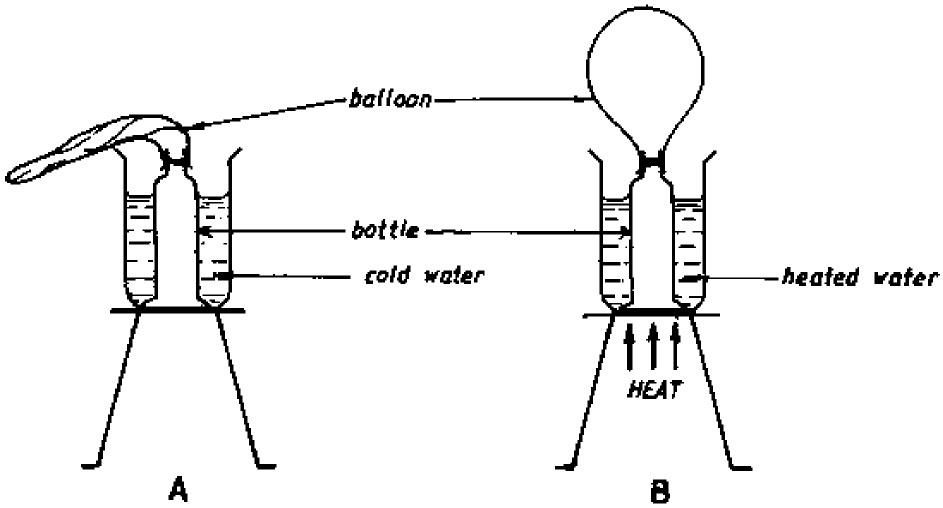

14. Why does the balloon swell out as shown in **B**?

....

15. Suggest what you think the experiment is intended to show.

....

16. Why are people encouraged to drink boiled water?

....

17. Why must fruits and green vegetables be included in our diet?

....

18. Why does a pregnant mother need foods rich in proteins?

....

19. Why should finger-nails be kept short?

....

20. Why is the maize grain considered a fruit?

....

Use the drawing below to answer questions **21** and **22**.

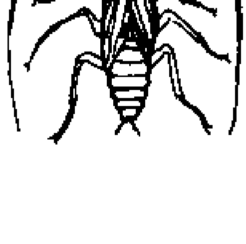

21. What stage in the life cycle of a cockroach is shown in the diagram?

....

22. Give a reason for your answer to question 21.

....

23. How does a cassava plant obtain its food when its leaves have fallen off?

....

24. Why does a piece of stone placed into water sink?

....

The diagram below shows a metalic rod made of two different metals (X and Y) bound together as shown in **A**. *When heated, the rod bends as shown in* **B**. *Use the diagram to answer questions* **25** *and* **26**.

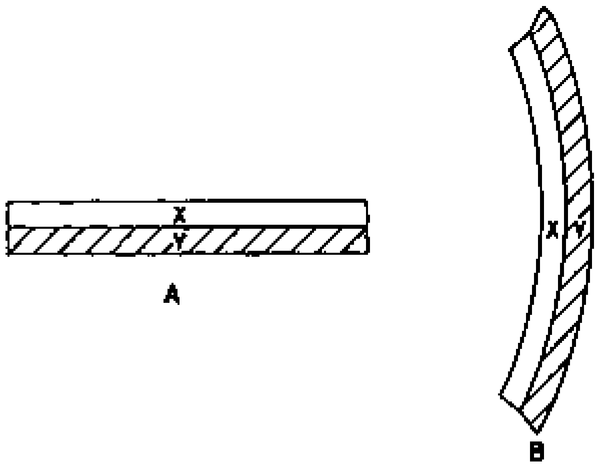

25. Which of the metals expands faster, **X** or **Y**?

....

26. Give a reason for your answer to question 25.

....

27. What is the function of a dry cell?

....

28. Why does a wet cloth spread on a line inside a house dry?

....

29. What is a compound fracture?

....

30. What First Aid should be given to a person who gets a compound fracture on the arm?

....

31. Why must one avoid being near a person smoking?

....

32. Of what use is a ventilator of a house?

....

33. What do you understand by 'drug dependency'?

....

34. What vector(animal) carries the bubonic plague germ?

....

35. Why should pit-latrines be smoked from time to time?

....

36. Tonto shares his hut with goats. State one disadvantage of this practice.

....

37. Some charcoal is burnt in a container as shown in the diagram below. The container and its contents were weighed before and after burning. There was no change in the weight. Why was there no change in weight?

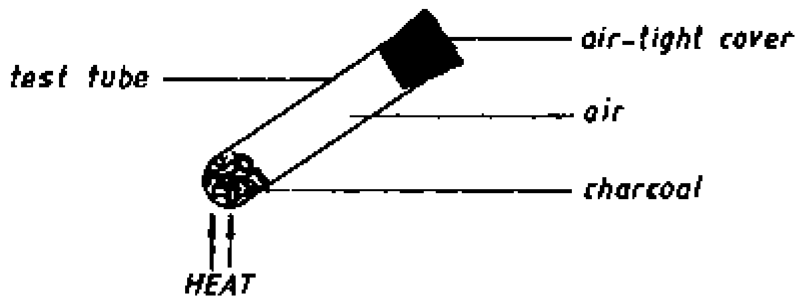

....

38. State one cause of fainting.

....

39. A ray of light meets the surface of a mirror as shown in the diagram below. Draw the reflected ray. (N.B. Use of compass not necessary).

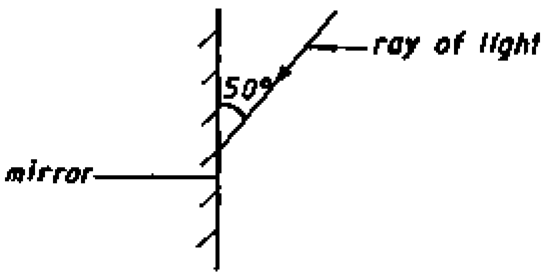

40. What is the importance of weeding in growing crops?

....

SECTION B

41. The diagram below is of an Irish potato. Use it to answer questions (a) to (d).

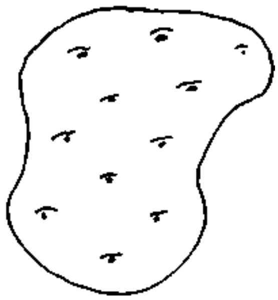

(a) What part of the Irish potato is shown in the diagram?

....

(b) Give a reason for your answer in (a).

....

(c) What main food value does the Irish potato have?

....

(d) How does the method of propagation of Irish potato differ from that of sweet potato?

....

42. The table below gives a list of diseases against which children should be immunized and the age in months in which the first dose of vaccine should be given.

(a) Study the table carefully and fill in the missing information.

DISEASE	AGE IN MONTHS
(i) Tuberculosis	
(ii) Tetanus	1½ months
(iii)	1½ months
(iv)	9 months

(b) What is the importance of a health card?

....

43. (a) Give two possible sources of worm infection.

(i) ....
(ii) ....

(b) State two signs of worm infection.

(i) ....
(ii) ....

44. Uganda Electricity Board generates most of its electricity at Jinja.

(a) State the source of the electrical energy.

....

(b) How does the electricity generated at Jinja get to a consumer in Kampala?

....
....

(c) Give two uses of electricity to a family.

(i) ....
(ii) ....

45. Below is a drawing of a pin-hole camera, with an image of an object formed on the screen. The object is located along line PQ.

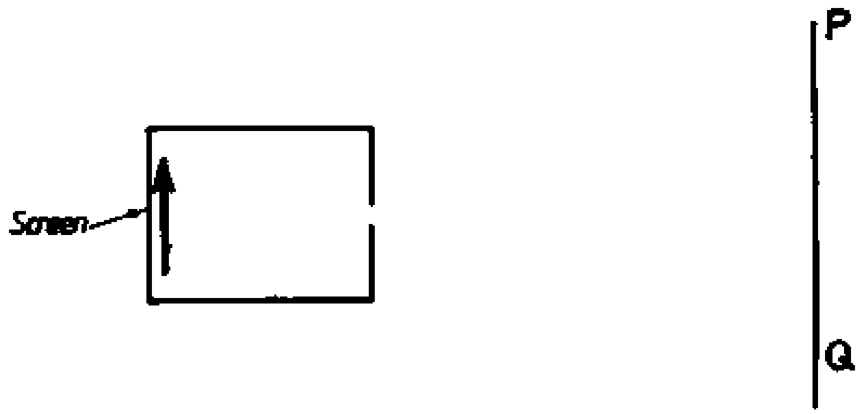

(a) Draw lines to show how the image of the object is formed.
(b) Draw the object.
(c) Compare the object and the image.

(i) ....
(ii) ....

46. John pulls a load of 50 kg over a set of metal rollers. Peter pulls another load of the same weight along the ground (see diagram below).

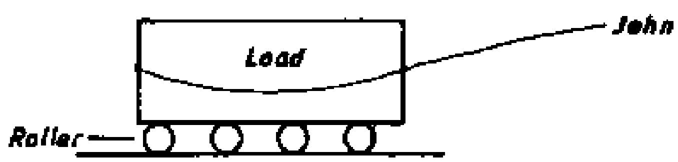

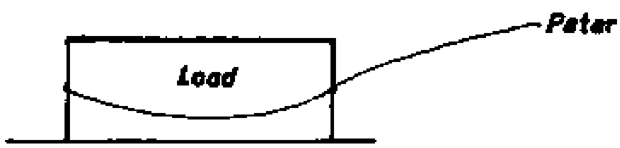

(a) Explain why one of the two (people) uses less force.
....

(b) What is the advantage to a driver of pouring sand on a slippery road?
....

(c) Explain your answer in (b) above.
....

47. The AIDS virus does not kill its victims.

(a) What leads a person infected with the AIDS virus to death?

....

(b) Why should one not be afraid of sitting in the same classroom with someone infected with the AIDS virus?

....

(c) What is the commonest method through which the AIDS virus is spread?

....

48. (a) How does each of the following help to maintain soil fertility:

(i) Crop rotation?...
(ii) Mulching?..

(b) Give two other ways of maintaining soil fertility.

(i) ....
(ii) ....

49. A child suddenly removed the cover of a sauce-pan full of boiling water. One arm of the child was thereby burnt by the steam.

(a) What kind of burn did the child get?

....

(b) What First Aid would you give to the child?

....

(c) Give two possible ways by which such accidents could be prevented.

(i) ....
(ii) ....

50. (a) Give two types of cattle.

(i) ....
(ii) ....

(b) Why are cattle-keepers encouraged to practise paddock system of grazing?

(i) ....
(ii) ....

51. Below is a diagram showing an eye defect.

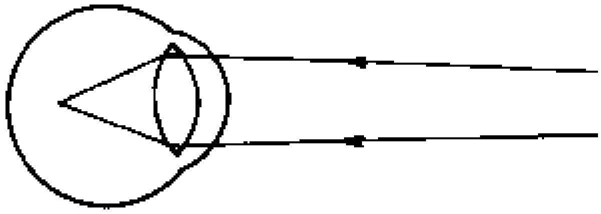

(a) Name the eye defect shown in the diagram above.

....

(b) Give reasons for your answer in (a) above.

(i) ....
(ii) ....

(c) How can this eye defect be corrected?

52. (a) State two functions of mammalian teeth.

(i) ....
(ii) ....

(b) An elderly man has lost all his molar teeth. What feeding problem would he experience?

(i) ....
(ii) ....

53. (a) Give two reasons why burning and rusting are considered similar reactions.

(i) ....
(ii) ....

(b) A farmer notices that whenever he leaves his hoe outside the whole day, on a clear day, it does not rust; but whenever he leaves the same hoe outside at night, it rusts. Why is this the case?

....

54. The diagram below is of a fish. Study it and use it to answer the questions that follow.

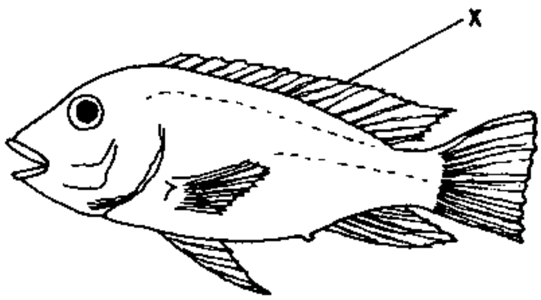

(a) Name the part labelled **X**.
(b) Mark with **Y** the position of the gills.
(c) How does a fish take in oxygen?
....

55. (a) What is an essential drug?

....

(b) Give an example of an essential drug.

....

(c) Why are prescriptions important in the treatment of sicknesses?

(i) ....
(ii) ....

3.10. Zambia

3.10.1. Overview

End of Primary School Examination

1.	**Title of examination:**	Grade VII Composite Examination
2.	**Amount of fees charged:**	≈ US$ 1
3.	**Examination after years in primary school (6, 7, 8 years):**	7 yrs
4.	**Children's entry age in primary school:**	6-7 yrs
5.	**Number of pupils sitting examination in 1994:**	179,148
6.	**Examination subjects offered:**	6 subjects (including Zambian Languages) tested in 5 papers: • English • Zambian Languages • Mathematics • Environmental Science (incl. Agriculture) • Social Studies In addition Special Papers are set in Mathematics & English to test the IQs of children (aptitude tests). The paper on Zambian Languages does not count for the selection for secondary school.
7.	**Language of examination:**	English (except for Zambian Language papers)
8.	**Institution setting the examination questions:**	Examinations Council of Zambia
9.	**Have there been any reforms in the examination questions?**	NOT YET The Council is working on an examination syllabus to improve the examinations.
10.	**Stages of development of examination questions**	• Primary school teachers and college lecturers submit items to the Council.

			• Items are scrutinized and moderated by the selecting panel. • Selected items are pre-tested in October/November. • Pretest papers are marked and item analysis produced. • Selecting panel chooses items for the final paper. • Final examinations take place. • Past examination item analysis is done.
11.	**Type of examination questions and distribution of different kind of questions.**		Multiple-choice: 30% knowledge 40% comprehension 20% application 10% problem solving
12.	**Is continuous assessment incorporated in the final examination?**		Yes [ ] No [x]
13.	**Are examination items pretested?**		Yes [ ] No [x]
14.	**Which professional groups are involved in setting the examination questions?**		• Primary school teachers • Secondary school teachers • School inspectors • Tutors of TTCs • Curriculum specialist
15.	**Are the same professionals who set the examination questions involved in marking papers?**		Yes [ ] No [x]
	If no, who marks the papers (state)?		Computer marks and processes
16.	**How are examination results used for improving teaching in primary schools?**		Not officially, but teachers use the results to judge the effectiveness of their teaching methods Completion of the syllabus
17.	**To what other uses are the examination results put?**		• Selection to grade VIII • Certification • To generate statistical reports
18.	**Main problem with Primary School Leaving Examinations?**		The quality of test items in all the subjects (most items are of the recall type)

3.10.2. State-of-the-Art of End of Primary Education Examinations in Zambia

by Simon I. Phiri, Examinations Council of Zambia

Introduction

Primary school education lasts seven years from Grade I to Grade VII. The children enroll for Grade I when they are six to seven years old and normally take the Grade VII examinations when they are 13 or 14 years old. Universal primary education has almost been attained in most regions of the country.

Every year in the first or second week of November, Grade VII Composite Examinations are held throughout the country following the laid down timetable and examination regulations.

Purpose of Examination

The main purpose of the examination is twofold:

(1) Selection for Grade VIII - limited places available - selection of the best candidates takes place.

- It is hoped that in future this examination will not be necessary once universal education up to Grade IX is achieved.

- Selection for Grade VIII is governed by the availability of places in Grade VIII.

(2) Certification - all candidates who take the examination are awarded certificates. There is no fail grade at this level.

Those not selected for Government, ZCCM Trust and Mission Secondary Schools and Basic Schools are absorbed by the following schools:

- Correspondence schools known as Open-Day Secondary Schools,
- Private schools,
- Academic Production Unit Classes Schools,
- Night schools.

Selection for Grade VIII is based on the number of points in six subjects a candidate scores (standard scores). The successful candidate will be the one who scores above a regional cut-off point. Boys and girls have different cut-off points. The cut-off points vary from region to region and depend on the number of places available in Grade VIII in a particular region.

Girls normally have a lower cut-off point than boys because:

(1) the drop out rate is higher for girls than boys, especially when the girls reach maturity age;

(2) there is less emphasis by parents for girls to be in school, they prefer boys to attend;

(3) due to a number of factors girls generally score lower marks than boys in all of the regions of the country.

Due to (1) and (2) the number of girls in school is lower than that of boys, although the female population in the country is greater than that of males by a ratio of 1.2 to 1.0. In most schools the ratio of female to male is 1:1.5. In order to address the imbalance, the government deliberately lowers the cut-off points for girls so as to increase the ratio of females selected for Grade VIII.

Type of Examination

Most Grade VII candidates sit for seven subjects namely English, Social Studies, Mathematics, Environmental Science, Special Paper One (Verbal Reasoning), Special Paper Two (Non-Verbal Reasoning) and one of the seven official Zambian languages. Candidates in trust and private schools do not sit for any Zambian language.

All the question papers consist of multiple-choice type of questions. The number of items is normally 50 or 60 depending on the subject. The candidates answer the questions on the answer cards provided by the Examinations Council of Zambia. They do this by shading what they perceive to be the correct response to an item.

The answer cards are marked and processed by computer, mainly because of the large number of candidates and because it makes it easier to:

- standardise the scores,
- produce selection listing for both sexes in order of merit for selection purposes,
- produce various statistics,
- print certificates.

Advantages and Disadvantages of Multiple-Choice Type of Examination

Advantages

- Quick processing of examination results.
- Non-human subjectivity in the marking of the cards - marking is objective.

Disadvantages

The examination does not offer the candidate the opportunity to show any originality and encourages rote learning. Quite a number of candidates cannot even spell or write their own names. The examination does not ask or test for such skills so the teachers and the candidates do not bother about them. In future a short written component will be set to reverse this anomaly.

Test Development for Examinations

Every year the Research and Test Development Unit of the Examinations Council of Zambia pretests all the items, except Zambian languages items, that will be offered in the examinations. Two papers are prepared in each subject. The pre-tests sample is taken from the candidates for that year's examination. The pre-tests are conducted in October/November when it is assumed that the candidates have completed the syllabus and are ready for examinations.

The pre-test items are analysed by the computer to find out their suitability for use in the final paper. The item analysis shows the facility value (percentage of candidates selecting an option) and the discrimination index (how the question discriminates the able from the less able candidates). For an item to be included in the final paper it should have a facility value of 40-70% and a discrimination index (or point biserial) of above 0.20. The items that are rejected may be retested after they have been reviewed. The selected good items are put in the item bank.

Both the pre-tests and the final papers are set according to the test specification of each subject.

Item Writing for Examinations

(1) Subject secretaries (employees of the Examinations Council of Zambia) send invitations for submission of items to primary school teachers and primary school teacher training lecturers countrywide. Each item writer is expected to submit at least 25 items. The teachers who submit items are paid regardless of the quality of the items. Each subject must have at least 20 item writers. The teachers are free to choose the subject area they feel they are competent in. Invitations for items are sent for all the six subjects examined at Grade VII level except the seven Zambian languages.

(2) Upon receipt of the items the subject secretaries scrutinize them with a view to reviewing and improving some of the items that may not be so perfect in construction. The selected items are then presented to a setting panel committee. The committee consists of a chairman and three to four other members including the subject secretary. The task of this committee is to come up with two full, separate papers in their subject for use in the current year's pre-test in October/November. Each paper must satisfy the test specifications for the subject.

(3) The pre-test answer cards are marked and analysed by computer, and item analysis printouts are produced.

(4) The subject secretary and the other setting panel members meet to select items for the final paper. The items are chosen according to whether they satisfy the two parameter ranges. The preferred range for facility level is 40-70% and for discrimination index the range must be above 0.20. The final paper is also set as per test specifications. This may vary from year to year but not much.

(5) After the final examination post-exam item analysis is done. The common feature for 1991 examinations e.g. is that items analysed as difficult in the pre-tests' analysis turned out to be easy - i.e. facility value was higher.

(6) The previous test specification for Science was in favour of recall-type of items. They contributed over 50% of the items in theory but in practice the paper actually in some years was over 80% recall. Beginning in 1991 an effort was made to reduce recall-type items from 50% to 30% and a new test specification was drawn up in consultation with the Curriculum Development Centre. This new test specification was implemented in the 1992 Environmental Science paper.

The Examinations Council of Zambia is working on an examination syllabus which will be different from the syllabus designed by the Curriculum Development Centre. This is because some objectives which were being tested do not contribute to the child's development after school.

(7) For the items to improve, workshops for item writers are essential.

Conclusion

The Grade VII Composite Examination is an examination which marks the end of Primary School Education. The results are awaited with much anxiety by both the candidates and their parents. This is so because of the low progression rate to Grade VIII. For most people this examination, if one is selected, is like one has won a state lottery jackpot. The Grade VII entry and selection for Grade VIII are shown below. Between 1980 and 1990 the progression rate was on average 21.76%. There was an increase in 1984 from 16.58% to 21.6% due to opening of extra Grade VIII classes in basic schools (these offer Grade I to IX). The same is true for 1989 and 1990 when a lot of basic schools were opened in the eastern and southern regions of the country. In 1993 a total of 993,705 pupils sat the exam. 54,345 pupils were selected into Grade VIII (= 28.05%).

3.10.3 Environmental Science Paper 1994

EXAMINATIONS COUNCIL OF ZAMBIA

PAPER 4 **ENVIRONMENTAL SCIENCE** **TIME: 60 MINUTES**
S/TENVSC4/G7/94

1. Read these instructions carefully.

2. **DO NOT** turn this page before you are told. Your teacher will tell you when to turn this page to begin answering the questions.

3. There are 50 questions in this **SCIENCE** paper. You will be given **EXACTLY** 60 **MINUTES** to do the questions.

4. For each question four answers are given, but only one of the four is right. Work out which is the **BEST** answer. Then, on your **ANSWER SHEET** shade the answer space of the letter of your choice in pencil.

EXAMPLE: Malaria, Leprosy and Measles are names of ...

A. plants.
B. insects.
C. minerals.
D. diseases.

The best answer is D, you would show this answer like this:-

5. You must **SHADE** your answer spaces **COMPLETELY** and **DARKLY WITH A PENCIL.** If you have to change your answer, you must rub out the shading **VERY NEATLY** before shading the new one. **USE A CLEAN RUBBER.**

6. When you have finished one page, go straight on without waiting to be told. If you have time left at the end of the question paper, use it to check your work carefully.

7. Look at your **ANSWER SHEET.** At the top it should have your name, sex, date of birth, examination number, primary school name and name of Secondary School of your choice. It should also say **PAPER 4 ENVIRONMENTAL SCIENCE** on the bottom left side.

8. You will **NOT** be able to ask questions once the examination has began.

<u>DO NOT TURN THIS PAGE UNTIL YOU ARE TOLD</u>

<u>USE ONLY A PENCIL FOR YOUR ANSWERS</u>

1. Fish can breathe under water through their ...

A. scales.
B. gills.
C. pores.
D. noses.

2. Water is put in a basin. It is heated until no more is left. The water has ...

A. filtered.
B. dissolved.
C. evaporated.
D. melted.

3. During the hot and wet season, which diseases are likely to break out due to unhygienic conditions especially in the villages and townships?

A. AIDS, T.B., cholera.
B. Cholera, typhoid, AIDS.
C. Cholera, T.B., AIDS.
D. Dysentry, cholera, typhoid.

4. What is the function of white blood cells?

A. They carry oxygen around the body.
B. They carry food around the body.
C. They help to get rid of carbon dioxide.
D. They kill micro-organisms harmful to the body.

5. Which of these is not an agent of weathering?

A. Wind.
B. Rain.
C. Moon.
D. Sun.

6. Look at the diagrams on reflection. Which shows the proper reflection of a ray of light on a plane mirror?

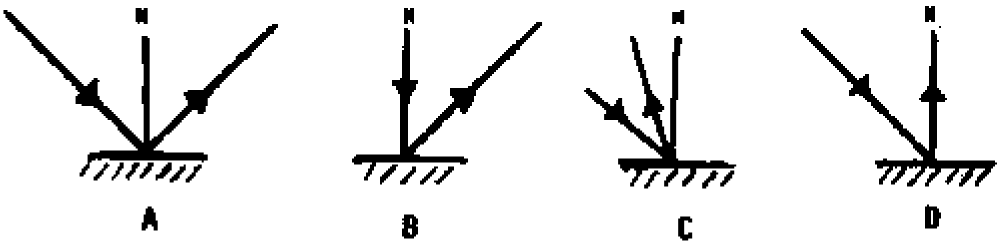

7. Many plants which have weak stems climb on other stronger plants. They do this to get more ...

A. space.
B. fresh air.
C. sunlight.
D. warmth.

8. It is important to leave spaces between the sticks when a fire is laid ready for lighting. This is because ...

A. fewer sticks are then needed and this saves wood.
B. the smoke is made to rise easily.
C. the temperature of the flame can be controlled.
D. the air between the sticks is needed for burning.

9. Two beakers are filled with the same amount of water and put into two identical heaters. One beaker X is covered with lid while beaker Y is left exposed. Which will boil first and why?

A. Y because less heat is lost.
B. X because heat loss is reduced.
C. All because they receive equal heat.
D. None because the heat received is little.

10. Study the table carefully.

PLANT	ENERGY GIVING FOOD	BODY BUILDING FOOD	PROTECTIVE FOOD
BEAN	little	plenty	little
MANGO	little	little	plenty
GROUNDNUT	little	plenty	little
PAWPAW	little	little	plenty
IRISH POTATO	plenty	little	little

Using the Table we can say ...

A. irish potatoes and groundnuts give us plenty of protective food.
B. we get plenty of body-building food from beans and groundnuts.
C. we get plenty of protective food from beans and mangoes.
D. pawpaws and mangoes give us plenty of body-building food.

11. Which one of the following statements contains information about friction?

A. Attraction of a body to the earth.
B. Property of matter which causes it to be attracted to any piece of matter.
C. Decreases as the distance from the earth increases.
D. Offering resistance to movement between surfaces in contact.

12. When Chiko examined a lump of soil she found that it was dark in colour, was not sticky but contained some plant matter What type of soil was it?

A. Sandy soil.
B. Clay soil.
C. Swampy soil.
D. Loam soil.

13.

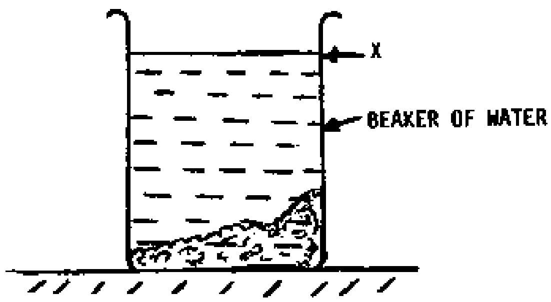

Look at the diagram. Besa dropped a lump of soil into a beaker of water. What did he probably find at X?

A. Humus.
B. Stones.
C. Sand.
D. Clay.

14. Dog belongs to the same group of animals as ...

A. lizard, fish and whale.
B. cow, camel and crocodile.
C. man, cat and bat.
D. chicken, pig and rat.

15. Look at the diagram of the eye. Which part controls the amount of light getting into the eye?

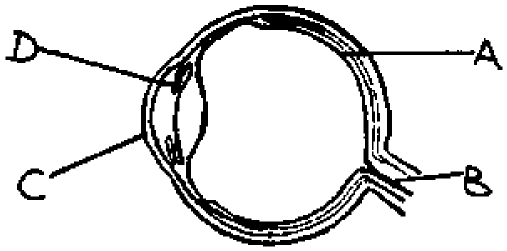

16. A freezer in a shop does not need a lid. The ice cream or butter inside does not melt because ...

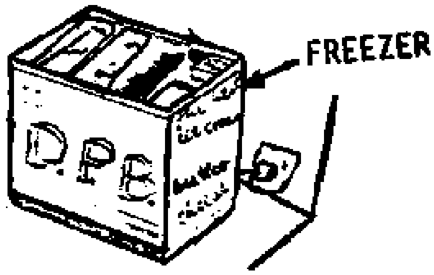

A. cold air does not rise,
B. the fridge absorbs radiation.
C. the fridge is a good conductor.
D. the shop is freezing.

17. People can protect themselves from mosquitoes bites by ...

A. going to nearest clinic every week.
B. staying awake the whole night.
C. spraying floors with oil.
D. spraying oil on stagnant water.

18. Muleya was asked to separate sugar from a mixture of sugar and sand. Which of the following methods would be the best **way** of doing this?

A. Filtering, evaporating, dissolving.
B. Dissolving, filtering, evaporating.
C. Evaporating, filtering, dissolving.
D. Filtering, dissolving, evaporating.

19. An electro magnet can be considered to be a temporary magnet made from a coil of wire connected to a cell and an iron piece in the centre. Which one of the electro magnets would have the weakest magnetic field?

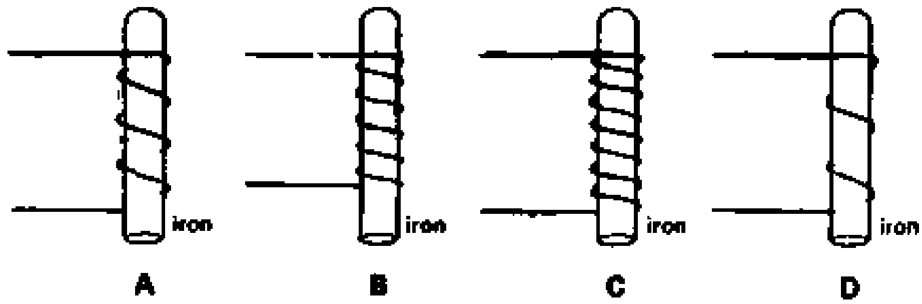

20. Zwange made an electric tester. He tested items by connecting them to **X** and **Y**. The results are shown in the table.

Material	light
coin	on
comb	off
chalk	off
knife	on
hair	off
nail	on

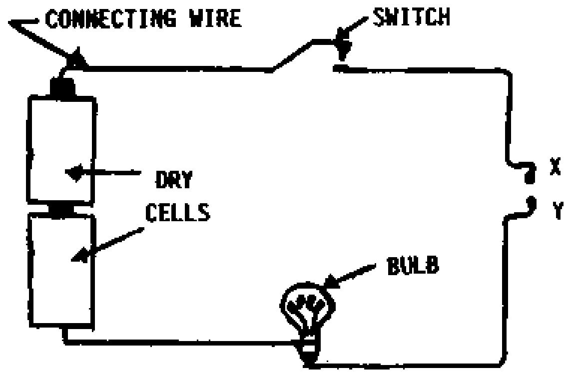

The results show that electricity can pass through ...

A. the coin and nail only.
B. the comb, chalk and knife.
C. the knife, nail and coin.
D. the nail and knife only.

21. A potted plant in the house changed from green to yellowish. What would you do to make the plant green again?

A. Expose it to more light.
B. Put it in the dark.
C. Give it more water.
D. Give it more fertilizer.

22. Plants make fruits to ...

A. attract bees.
B. feed the leaves.
C. enable people to eat them.
D. help seed dispersal.

23. Which is a pivot in the drawing?

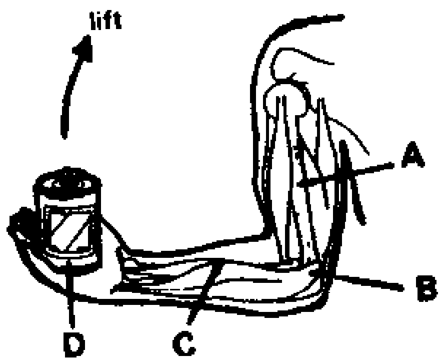

an arm lifting a weight

24. A female frog lays many hundreds of eggs at a time which hatch into tadpoles. What happens to all these tadpoles?

A. They all grow into frogs.
B. Many are eaten and only a few grow into frogs.
C. A few are eaten and many grow into frogs.
D. All are eaten.

25. What is the main value of compost?

A. It prevents soil erosion.
B. It puts valuable plant foods back into the soil.
C. It prevents the spread of pests and diseases.
D. It makes it possible for water to enter the soil.

26. Which of these will expand most when heated?

A. Ice.
B. Water.
C. Air.
D. Rubber.

27. One of the factors that might increase the rate of evaporation of water is ....

A. surface area.
B. volume.
C. weight.
D. depth.

28. The diagram below shows a simple barometer prepared by the members of a Science Club. The movement of the pointer in upward and downward directions indicates the weather conditions.

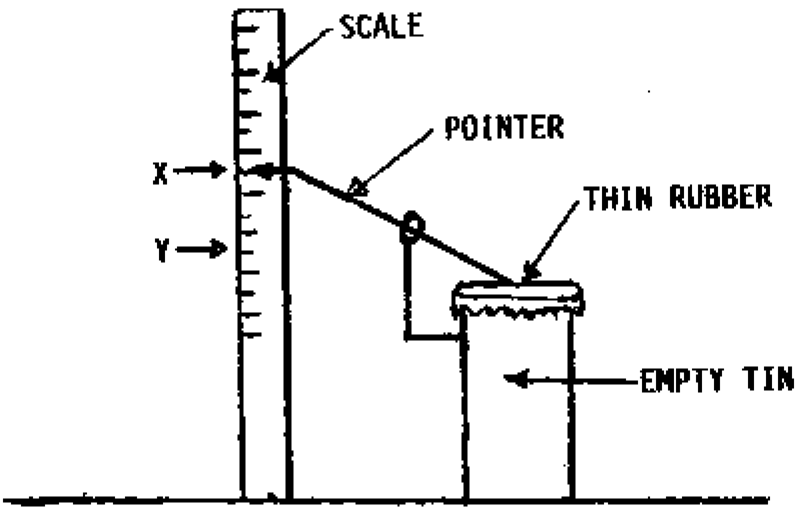

It was observed that the pointer suddenly moved DOWN from X to Y. This indicates that the ...

A. air pressure has decreased.
B. air pressure has increased.
C. temperature of the air has increased.
D. amount of carbon dioxide in the air has increased.

29. In the daytime leaves make use of carbon dioxide to ...

A. make food for the plant.
B. make the atmosphere cool.
C. keep the plant cool.
D. remove wastes from the plant.

30. A mother wanted to make a balanced meal with MEAT, RICE and CABBAGE. She could not get any cabbage. Which food would she use in the place of cabbage?

A. Fish.
B. Pumpkin leaves.
C. Carrots.
D. Maize.

31. Look at the drawing of an electric plug below.

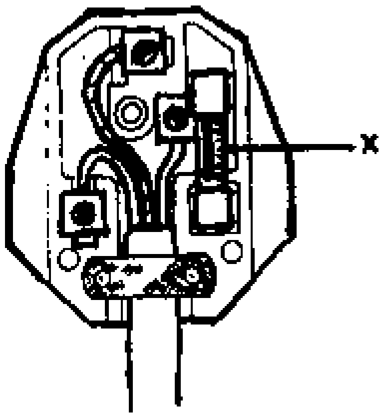

What is the name of the part labelled X?

A. Fuse.
B. Earth.
C. Switch.
D. Insulator.

32. The rope is pulled by Tobolo. The bag of maize will move towards

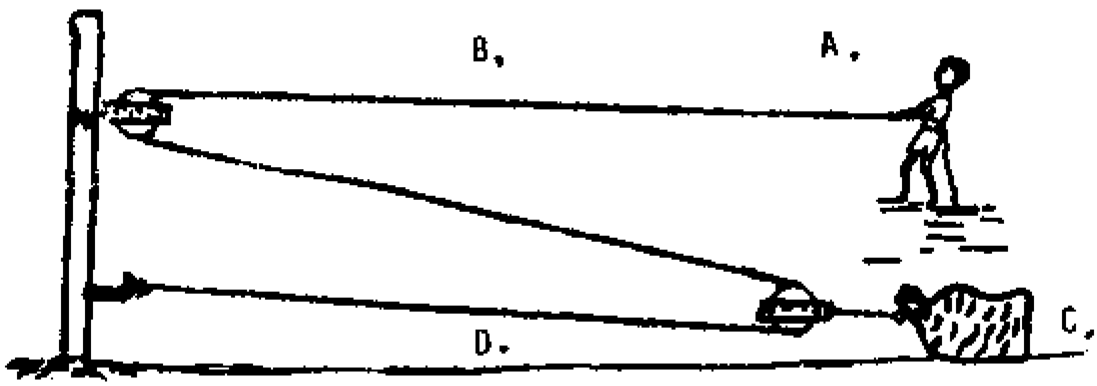

33. Before hatching, a bird embryo gets food from ...

A. seeds.
B. the yolk.
C. shell.
D. chicken's blood.

34. Lungs are like ...

A. two large empty ballons.
B. two large ballons filled with blood.
C. spaces in the body filled with bones.
D. sponges with lots of very small air pockets.

35. What energy change takes place in the pump when a boy is pumping up a bicycle tyre?

A. Heat-kinetic.
B. Heat-potential.
C. Kinetic-potential.
D. Potential-chemical.

36. A blacksmith makes an iron tyre for a wooden wheel. The iron tyre is just too small to fit over the wheel. To make it fit over the wheel, the blacksmith ...

A. heats the tyre.
B. cools the tyre.
C. heats the wheel.
D. cools the wheel.

37. This is a picture of a village along a river.

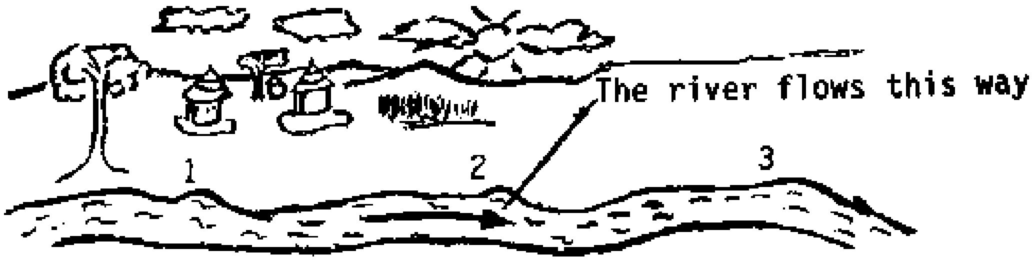

The three places marked are to be used for fetching drinking water, bathing and for animals to drink. Which is the **best** arrangement?

A. Bathing at 1, fetching drinking water at 2, animals at 3.
B. Fetching drinking water at 1, animals at 2, bathing at 3.
C. Animals at 1, bathing at 2, fetching drinking water at 3.
D. Fetching drinking water at 1, bathing at 2, animals at 3.

38. A food chain always starts with ...

A. Man.
B. Bread.
C. Plant.
D. Insect.

39. When Manda first walked into a dark room, he could not see anything until after sometime. This was because ...

A. his pupils were too wide.
B. he was blind.
C. his pupils were too narrow.
D. his retina was damaged.

40. Look at this drawing of water in a measuring jar. How much water is in the jar?

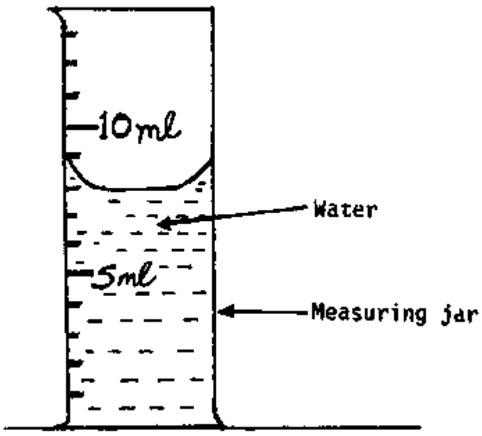

A. 3 ml.
B. 8 ml.
C. 9 ml.
D. 13 ml.

41. Study the diagram carefully.

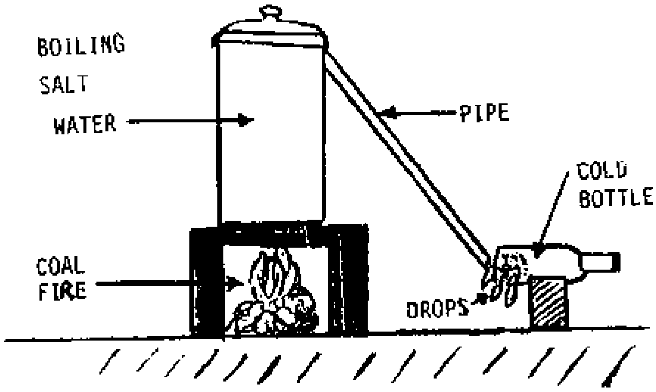

The water drops formed are ...

A. very salty.
B. salty.
C. not salty.
D. slightly salty.

42. The teacher gave four pupils a task to do. They had to find a flower with many male parts, 2 female parts and 6 petals. Each pupil came back with a different sort of flower. Which pupil found the right flower?

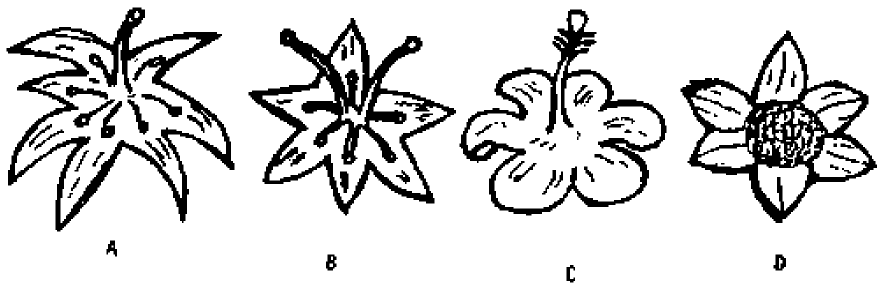

43. Study the diagram carefully. A block of wood is allowed to slide down the ramp. The table shows the angle through which the ramp has to be tilted before the block will slide. Which surface gives the least friction when fixed on the bottom of the wood?

	surface	angle
A	Plastic	15°
B	Cork	22°
C	sandpaper	32°
D	polystyrene	28°

44. Look at the drawings. The length of the spring increases by 1 cm with 2 kg. How much does the length increase with 6 kg?

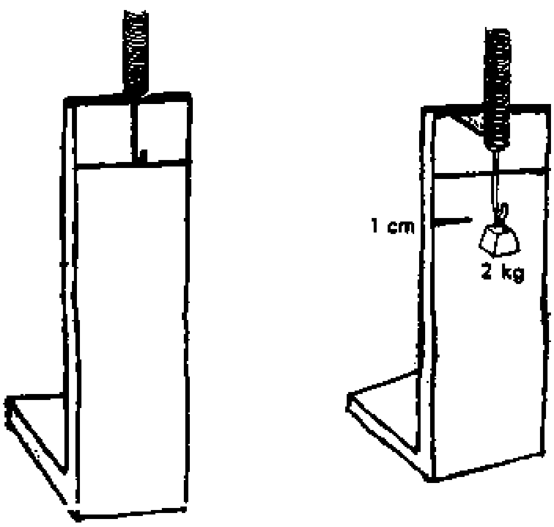

A. 2 cm.
B. 3 cm.
C. 6 cm.
D. 12 cm.

45. Nigeria has a lot of oil wells. This oil could have been formed from ...

A. coal.
B. dead plants.
C. petrol.
D. rocks.

46. The earth was formed from ...

A. dead animals which were crushed.
B. molter material which cooled down.
C. large mountains which joined together.
D. rocks which were joined together by water.

47. A picture of fire extinguisher is shown. Which set of gases can be in the fire extinguisher?

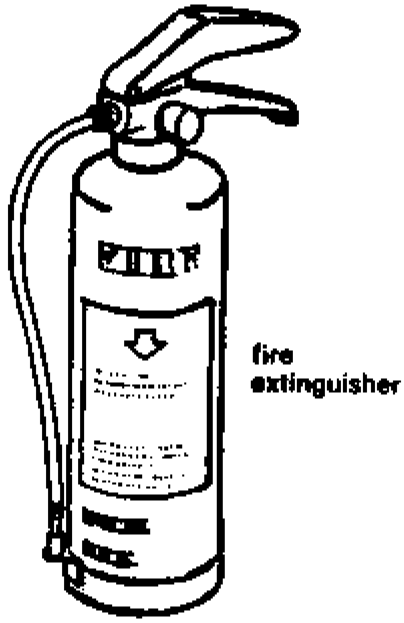

A. Oxygen and carbon dioxide.
B. Oxygen and nitrogen.
C. Carbon dioxide and nitrogen.
D. Nitrogen, oxygen and carbon dioxide.

48. Which means of communication has the shortest range?

A. Drumming.
B. Smoke signals.
C. Telephone.
D. Telex.

49. Before a smoke signal can be sent, what weather conditions must prevail?

A. Calm, sunny.
B. Windy, sunny.
C. Cloudy, windy.
D. Cloudy, dark.

50. When a gun is fired, sound and light are produced in addition to the bullet, being shot. From what energy are the sound and light produced?

A. Heat.
B. Kinetic.
C. Chemical.
D. Electrical.

STOP! GO BACK AND CHECK YOUR WORK

3.10.4 Environmental Science Paper 1993

EXAMINATIONS COUNCIL OF ZAMBIA

ENVIRONMENTAL SCIENCE

PAPER 4

TIME: 60 MINUTES

S/SENVSC4/G7/93

1. Read these instructions carefully.

2. DO NOT turn this page before you are told. Your teacher will tell you when to turn this page to begin the questions.

3. There are 50 questions in this SCIENCE paper. You will be given EXACTLY 60 MINUTES to do the questions.

4. For each question four answers are given, but only one of the four is right. Work out which is the BEST answer. Then, on your ANSWER SHEET shade the answer space of the letter of your choice in pencil.

EXAMPLE: Malaria, leprosy and Measles are names of ....

A. plants.
B. insects.
C. minerals.
D. diseases.

The best answer is D, you would show this answer like this:-

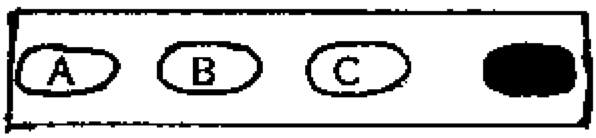

5. You must SHADE your answer spaces COMPLETELY and DARKLY WITH A PENCIL. If you have to change your answer, you must rub out the shading VERY NEATLY before shading the new one. USE A CLEAN RUBBER.

6. When you have finished one page, go straight on without waiting to be told. If you have time left at the end of the question paper, use it to check your work carefully

7. Look at your ANSWER SHEET. At the top it should have your name, sex, date of birth, examination number, primary school name and name of secondary school of your choice. It

should also say PAPER 4 ENVIRONMENTAL SCIENCE on the bottom left side.

8. You will NOT be able to ask questions once the examination has began.

<u>DO NOT TURN THIS PACE UNTIL YOU ARE TOLD</u>

<u>USE ONLY A PENCIL FOR YOUR ANSWERS</u>

1. The germ that causes AIDS can be mostly spread by ......

   A. sexual intercourse.
   B. sharing the toilet.
   C. shaking hands.
   D. mosquito bites.

2. A house fly can spread ....

   A. dysentry, T.B and polio.
   B. dysentry, cholera and typhoid.
   C. dysentry, cholera and TB.
   D. cholera, polio and AIDS.

3. Look at the diagram of the human food canal below.

There are parts labelled A, B, C, and D.

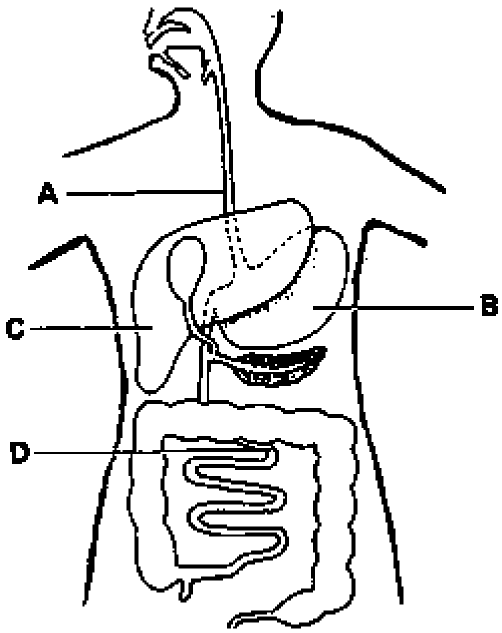

Which part is the liver?

4. At under five clinics infants and young children are immunised against the following diseases:-

   A. AIDS, Cholera, Diarrhoea and Polio.
   B. Polio, TB, Tetanus and Whooping Cough.
   C. AIDS, TB, Cholera and Whooping Cough.
   D. Polio, TB, AIDS and Cholera.

5. You have to push the door to open it.

At which point would you use the smallest force?

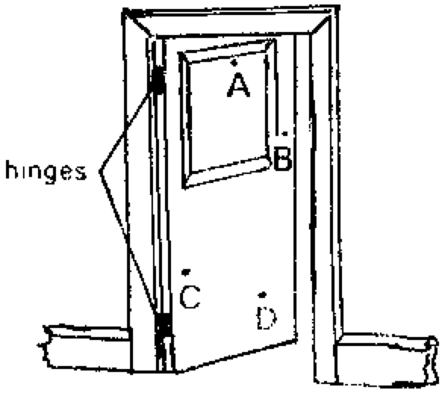

6. Blowing, over the open end of a cap of a fountain pen creates sound because ....

A. air in the cap vibrates.
B. air outside the cap vibrates.
C. lips of the person blowing vibrate.
D. air in the cap stops vibrating.

7. Here are two graphs from a school weather record, in the same week

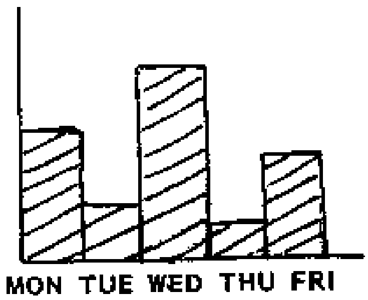

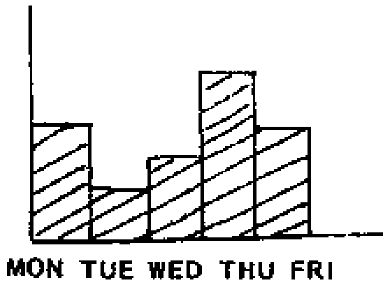

The first one shows the speed of wind. The second shows the temperature. Which statement is right?

A. The hottest day had the slowest wind.
B. The hottest day had the fastest wind.
C. The coldest day had the slowest wind.
D. The coldest day had the fastest wind.

8. Water is poured into a can that has four holes on its side. From which hole will water come out with greatest force?

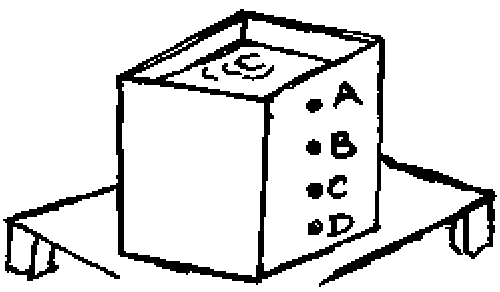

9. Seeds dispersed by wind should be ....

A. tiny and hard.
B. light and featherly.
C. heavy and featherly.
D. flat and hard.

10. Some valleys are not suitable for rearing cattle because.......

A. they are hot.
B. there is too much water.
C. they are tsetse fly infested.
D. there are a lot of wild animals.

11. The diagram shows a cooking pot containing very hot water. There are four things dipping into it.

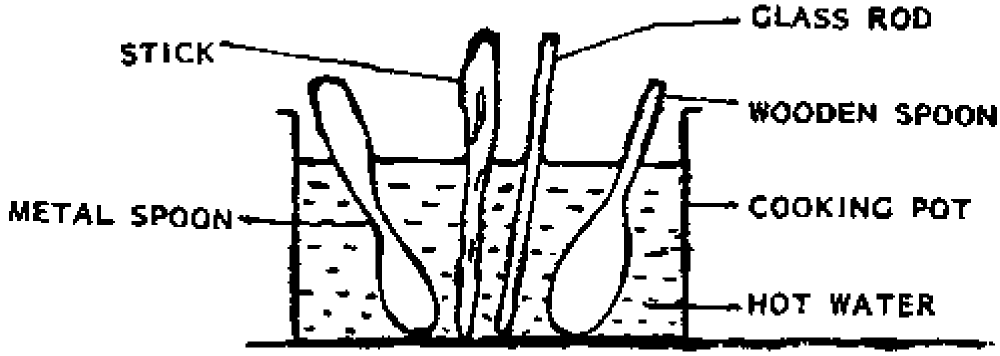

After ten minutes, which of the following will feel the hottest?

A. Glass rod.
B. Stick.
C. Wooden spoon.
D. Metal spoon.

12. Weather forecasting is important because ....

A. farmers can plan their work.
B. wind direction can be changed.
C. rainfall can be changed.
D. drought will not occur in the country.

13. Below is a diagram of a telephone system.

What is X?

A. Mouth Piece.
B. Ear Piece.
C. Radio.
D. Switch Board.

14. Study the four diagrams of electric circuits below. Which one will light?

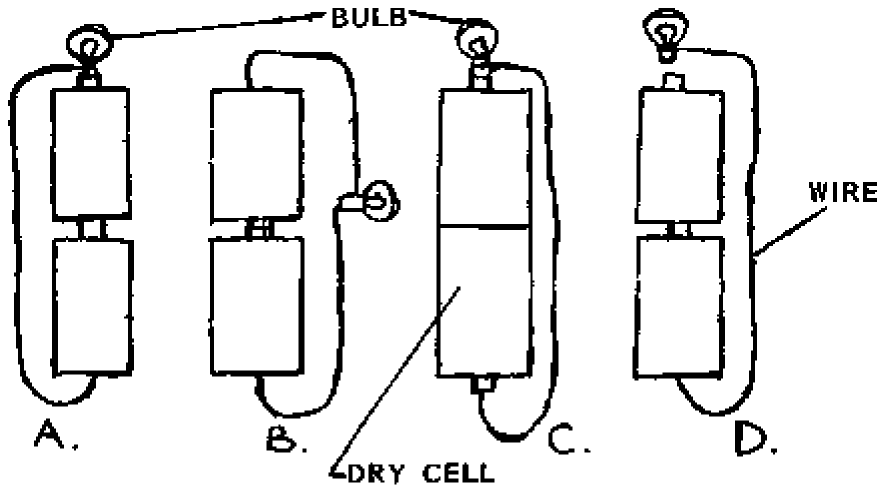

15. Why should we switch off lights when they are not needed?

A. To make room cooler,
B. To help save energy.
C. To use more charcoal.
D. To recharge the bulbs.

16. Samples of water were collected from Kafue, Luangwa, Kabompo and Chambeshi rivers. Which sample will show the greatest amount of pollution and why?

A. Luangwa because it is a fast flowing river.
B. Kabompo because it flows through a rain forest.
C. Kafue because it flows through Industrialised areas.
D. Chambeshi because it flows into Bangweulu Swamps.

17. As the earth goes around the sun it rotates from ....

A. east to west.
B. north to south.
C. west to east.
D. south to north.

18. Animal manure is better than artificial fertilizer because ....

A. it is cheap and is easy to apply.
B. it fertilizes the soil as well as improves the soil structure.
C. it is black and contains plant food in large quantities.
D. it provides more nitrogen than artificial fertilizers.

19. The property of copper that makes it useful to the world is its ...

A. bright colour.
B. softness.
C. good conductivity.
D. good insulation.

20. Study the diagram below and answer the question that follows.

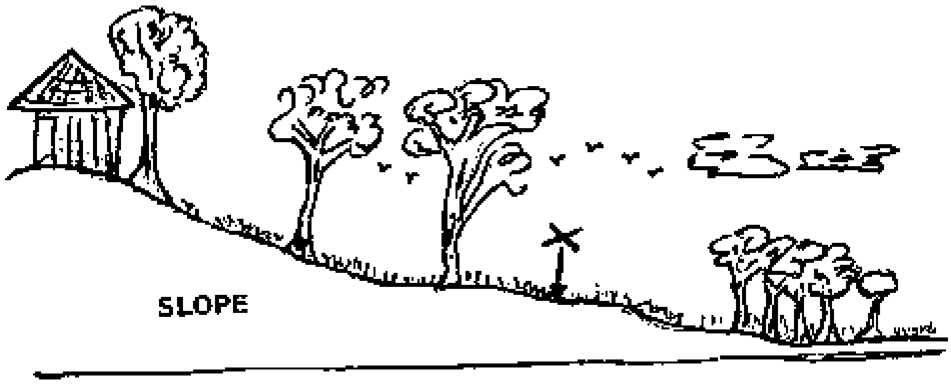

We can stop soil erosion at X by......

A. ploughing across the slope.
B. ploughing along the slope.
C. cutting down trees.
D. burning the area around.

21. A boy sets up an experiment shown in the diagram below. Every twelve hours the boy measures the height of the water in the glass pot.

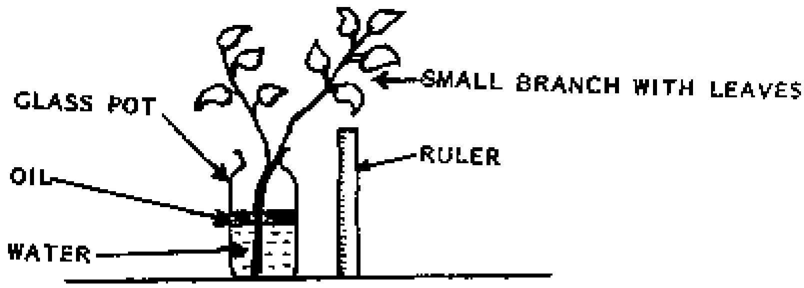

What is the most likely thing the boy is trying to find out?

A. Whether oil will kill the plant.
B. Whether the plant needs carbon dioxide and oxygen,
C. Whether the plant needs carbon dioxide alone.
D. Whether the plant uses up water.

22.

The drawings show the feet of three different birds. Below are four pairs of statements. Pick out the answer where BOTH statements are correct.

A. Foot 1 is of a bird of prey and foot 3 is of a swimming bird.
B. Foot 2 is of a perching bird and foot 3 is of Bird of prey.
C. Foot 3 is of a swimming bird and foot 2 is of a bird of prey.
D. Foot 1 is of a bird of prey and foot 2 is of a swimming bird.

23. Look at these drawings. They are the jaws of two different animals. Which of the following is true?

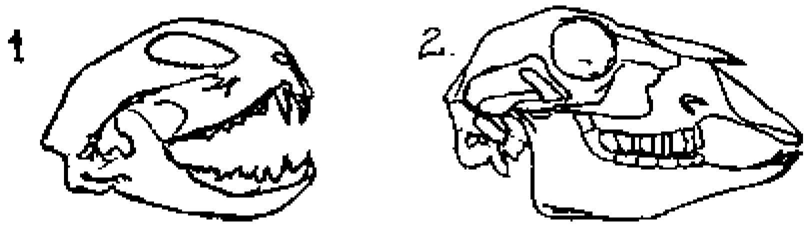

A. Both animals feed on plants only.
B. Animal 1 feeds on plants and animal 2 feeds on meat.
C. Animal 1 feeds on meat and animal 2 feeds on plants.
D. Both animals feed on meat only.

24. A vacuum flask keeps a hot drink warm for a long time because it..

A. radiates heat out.
B. reduces the heat escaping.
C. reduces the light getting out.
D. keeps warming the drink.

25. Water can exist as ....

A. liquid, air and gas.
B. solid, liquid and gas.
C. nitrogen, oxygen and water vapour.
D. oxygen, nitrogen and carbon dioxide.

26.

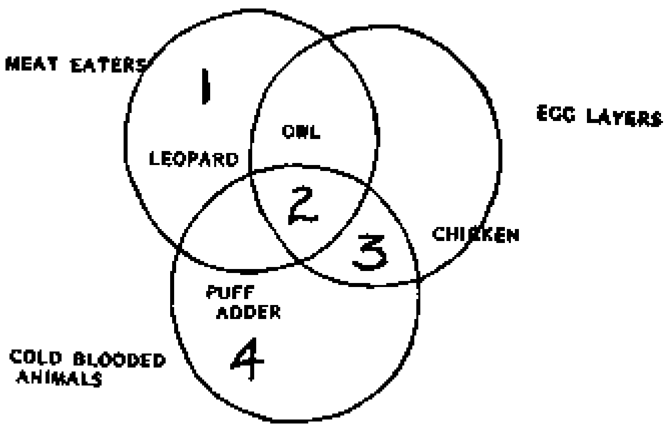

The tortoise is a cold-blooded animal that eats plants and lays eggs. Which number shows its correct position on the diagrams?

A. 1.
B. 2.
C. 3.
D. 4.

27. Look at the diagram. The wire is broken at X. What happens?

A. Both bulbs will stay a light,
B. Only bulb 1 will go out.
C. Only bulb 2 will go out.
D. Both bulbs will go out.

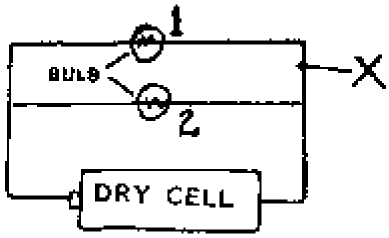

28. What energy changes take place when the battery lights up the bulb?

A. Electrical → Might → chemical.
B. Light → electrical → potential.
C. Chemical → electrical → heat and light.
D. Heat → kinetic → heat and light,

29. The diagrams show different size holes of a camera. Which hole will give the best image if the inside of the pinhole camera is painted black?

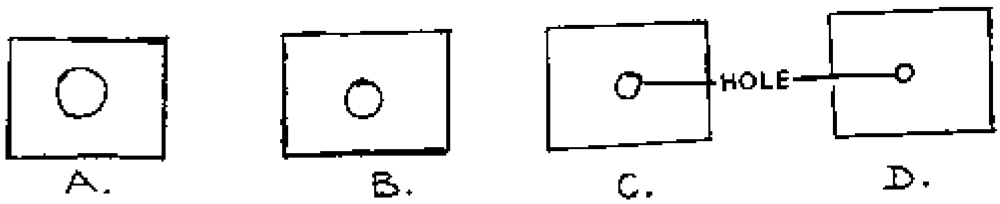

30. The best way to make a piece of steel into a magnet is by:

A. Stroking a magnet with the piece of steel.
B. Stroking the piece of steel with a magnet in the same direction.
C. Stroking the piece of steel with a magnet in different directions
D. Hitting the piece of steel with a magnet.

31. A boy pulls a box across a table. The friction is most if the table ....

A. is rough.
B. is smooth.
C. has beads on it.
D. has rollers on it.

32. Look at the diagram. If the hole in CARD C is covered, there will be no light between:

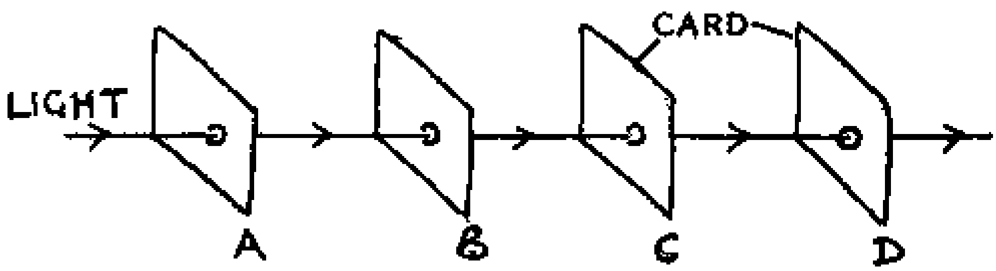

A. A and B.
B. B and C.
C. C and D.
D. A and D.

33. In the picture below a boy is shown breathing out in front of a mirror.

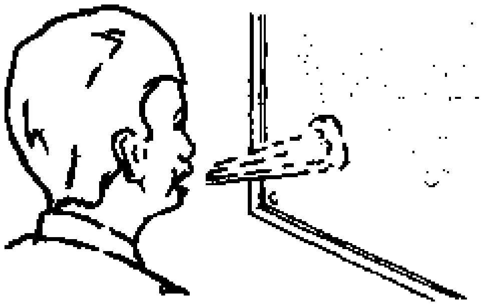

Which change is taking place on the mirror?

A. melting.
B. freezing.
C. evaporation.
D. condensation.

34. Study the diagram below:

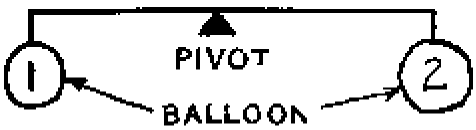

Two balloons 1 and 2 balance horizontally. Balloon 1 is slowly losing air until all the air is lost. Which diagram correctly shows what happened?

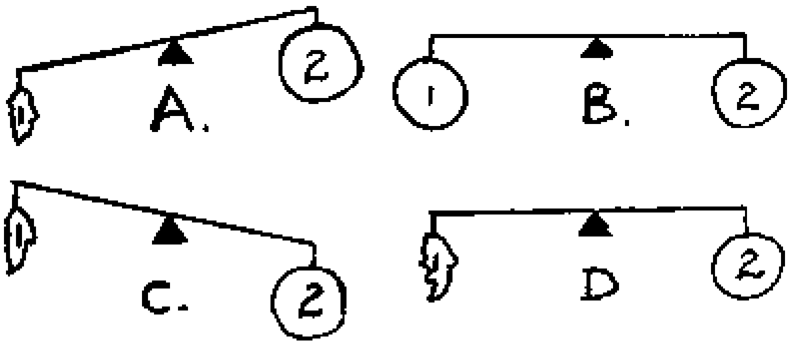

35. Gravity can act only on ....

A. large masses on the earth.
B. all things on the ground.
C. things around and on the earth.
D. things at the south and north poles.

36. When a person breathes out during respiration the air contains

A. more oxygen, less carbon dioxide and more nitrogen than ordinary air.
B. more nitrogen, less oxygen and more carbon dioxide than ordinary air.
C. more carbon dioxide, less oxygen and more water vapour than ordinary air.
D. less nitrogen and oxygen than ordinary air.

37.

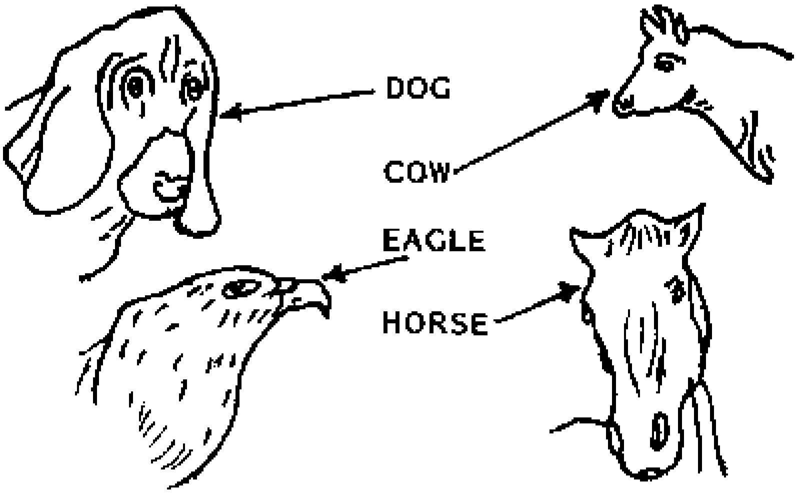

Given above is a set of four common animals. Study them carefully.

The DOG is different from the other animals shown because it is the only animal in the set that ......

A. eats meat.
B. suckles its young.
G. eats meat and suckles its young.
D. is a domestic animal.

38. An example of an animal which is cold-blooded <u>and</u> has a backbone is a ....

A. snail.
B. snake.
C. giraffe.
D. hippo.

39. Look at the drawing of a plant below.

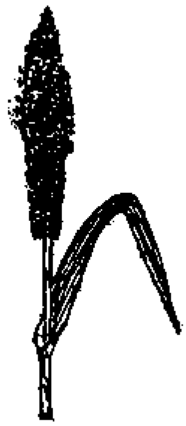

Pollination in this plant is most likely to be carried out by ....

A. bees.
B. wind.
C. moths.
D. water.

40. Heat is lost more rapidly by a surface which is ....

A. red.
B. black.
C. white.
D. silver.

41. The correct list of gases in ordinary air starting with the most abundant is ....

A. oxygen, nitrogen, carbon dioxide.
B. nitrogen, oxygen, carbon dioxide.
C. oxygen, carbon dioxide, nitrogen.
D. carbon dioxide oxygen nitrogen.

42. The string of a guitar can be made to give higher pitch and louder sound by ....

A. lengthening the string and plucking it harder.
B. Shortening the string and plucking it harder.
C. lengthening the string and plucking it gently.
D. shortening the string and plucking it gently.

43.

Plants EATEN BY Animals DIE AND BROKEN UP BY Microbes.

In the diagram above, microbes play the part of ....

A. producers.
B. consumers.
C. decomposers.
D. parasites.

44. Which of these crops would do better in a drought stricken area?

A. Maize.
B. Millet.
C. Rice.
D. Potatoes.

45. 30 ml of sand is poured into 30 ml of peas. After mixing, the volume is less than 60 ml.

This is because the grains of sand ....

A. melt into the peas,
B. fit between the peas,
C. are all the same size,
D. are harder than the peas.

46. The hinges on a door are oiled. When the door is moved, the friction in the hinges is ....

A. the same,
B. bigger than before,
C. smaller than before,
D. Slightly more than before.

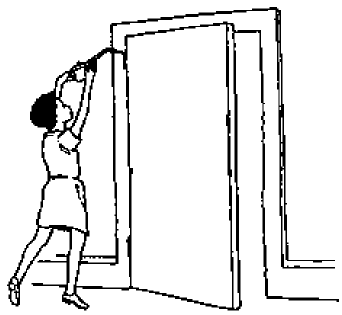

47. Fertilization takes place in plants when ....

A. seeds join with fruits,
B. pollen grains join with ovules,
C. pollen grains are carried to the stigma,
D. pollen grains are released from a flower.

48. Look at the drawings below.

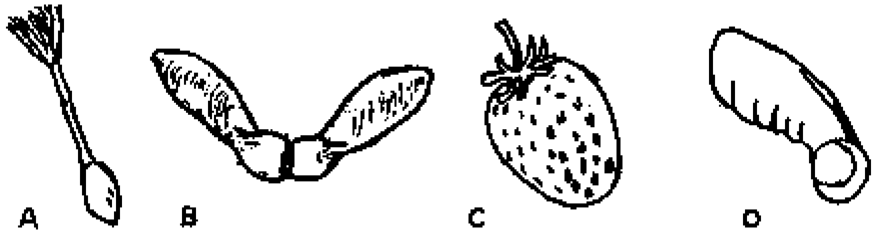

Which one is not scattered by wind?

49. Seeds are dispersed so that when young seedlings grow they

A. can be fertilized.
B. will be pollinated.
C. are not overcrowded.
D. Cannot be eaten by ants.

50. Salt is dissolved in water while stirring continously until more dissolves. More salt could be dissolved by ...

A. cooling.
B. heating.
C. shaking.
D. vapourizing.

3.11. Zanzibar

3.11.1. Overview

End of Primary School Examination

1.	**Title of examination:**	Form 1 Entrance Examination
2.	**Amount of fees charged:**	Nil
3.	**Examination after years in primary school (6, 7, 8 years):**	7 yrs
4.	**Children's entry age in primary school:**	7 yrs
5.	**Number of pupils sitting examination in 1994:**	7,189
6.	**Examination subjects offered:**	9 subjects • Science • Mathematics • Geography • History

		• Kiswahili • English • Political Education • Arabic • Religious Studies
7.	**Language of examination:**	Kiswahili
8.	**Institution setting the examination questions:**	Ministry of Education, Dept. of Higher, Science and Technical Education
9.	**Have there been any reforms in the examination questions?**	Yes
	When? (year)	1993
	What kind?	Children are in future tested after class 7 of primary school to select some for special secondary schools (Technical Schools, Islamic Schools, Science Schools, French Language School)
10.	**Stages of development of examination questions (please describe):**	• Primary school teachers write items in all subjects individually • Items reviewed by one moderator (Primary school teachers and school inspectors and exam officers) per subject at national level • Moderators set final exam paper
11.	**Type of examination questions and distribution of different kind**	Straight-forward recall questions only
12.	**Is continuous assessment incorporated in the final examination?**	Yes [ ] No [x]
13.	**Are examination items pretested?**	Yes [ ] No [x]
14.	**Which professional groups are involved in setting the examination questions?**	• Primary school teachers • School inspectors • Curriculum designers • Exam officers of the Ministry of Education
15.	**Are the same professionals who set the examination questions involved in marking papers?**	Yes [x] No [ ]
16.	**How are examination results used for improving teaching in primary schools?**	./.
17.	**To what other uses are the examination results put?**	Selection for Secondary School (Form 1) and assessing the general performance of primary schools
18.	**Main problem with Primary School Leaving Examinations?**	• Lack of skills and experience in designing test items • No facilities for proper data analysis and item banking • Lack of skills and experience in item analysis

3.11.2. An Overview of the 1993 Primary School Leaving Examination

by Ministry of Education

Background

Zanzibar consists of two islands - Unguja and Pemba. It provides 10 years of compulsory basic education. At the end of seven years of primary school there is a common examination, called Form 1 Entrance Examination.

Setting of the Examination

All primary schools are individually asked by their respective District Education Officers (DEOs) to set papers according to the level of the National Form 1 Entrance Examination. These papers are brought to the examination office by the DEOs. Each year, 3 to 4 papers from different Districts are given to one experienced primary school teacher for moderation. The paper that has been approved by the moderator is the one that becomes the National Paper (one man moderation).

Administration of the Examination

The examination is normally administered in the month of November each year. A total of 9 subjects are examined at this level and it takes 5 days to administer them.

Supervision of the Exam

The examination is supervised at national level. Most of the supervisors are head teachers or assistant head teachers. Schools in Unguja are supervised by people from Pemba and vice versa.

Invigilation

Invigilation is done at regional level by teachers of different schools. Teachers from one region are sent to another region for invigilation. Teachers from the hosting schools are not permitted to be present in school, unless assigned a special duty.

Despatching of Answer Scripts

Answer scripts are collected at the examination offices everyday. The papers are stored at the office waiting for marking. Since Zanzibar is a small country it is possible to collect all the papers on the same day.

Attendance

In 1993, out of 9,710 registered candidates from 128 primary schools 9,200 (94.75%) sat for the examination. The rest were reported to either have dropped out of the school between the time of registration and the time of examination or to be sick during the examination period.

These pupils are normally allowed to repeat the last year of primary school and re-sit for the National Examination.

Objectives of Zanzibar Primary School Leaving Examination

1. To select few students who will be admitted to Secondary Schools with special biases. From the 1993 examination, 290 (3.2%) candidates were selected to enter 8 secondary institutions with the following specializations:

- 2 Technical Secondary Schools which each take 40 students every year.

• 1 Muslim Academy which takes 40 students every year.

This institution, in addition to the normal secondary school subjects, also teaches Arabic and Islamic Studies.

• 1 French Secondary School which takes 40 students every year.

• 1 Secondary School with the emphasis on Science accommodating 40 students every year.

• 10 students are sent to Tabora Military School in Mainland Tanzania.

Students who are admitted in these Secondary Schools study O-level subjects and sit for the National (Tanzania) O-level Exam. Vacancies in the secondary schools are distributed quarterly to all districts, whereby female students will be considered preferentially to increase their enrollment.

2. To identify repeaters, e.g. candidates who performed poorly.

3. To assess the general performance of the schools, for both teachers and students.

4. To assess the performance of individual students at the end of their primary education.

Results

Out of 9,200 candidates who sat for the Examination, 8,463 (91.9%) were taken to secondary schools. This is because, in Zanzibar we have ten years of compulsory education (8 primary + 2 secondary). However, this system will be changed to 7 plus 3 years, where the 8th year is used as a preparatory year to secondary school. Emphasis at this stage is put on English and Mathematics. Official statistics of the examinations only show the averages of different subjects for different schools. No further statistical analysis is employed, due to lack of skills and resources.

Comments on the Performance

Generally the performance on the 1993 primary education examination was not satisfactory. Pass mark had to be lowered to an average of 20% in order to admit about 90% of the students in Form 1. All schools performed very poorly in all subjects, except in History.

Examination Problems

During the December 1993 »Science Camp« an analysis of the 1993 Science and Mathematics Examination question papers was carried out (»Science Camp« is a research activity project which has been conducted annually during the month of December since 1988).

This research project tries to define efficient methods for the teaching of Science. From the analysis we found out that our examinations consist mainly of straight forward recall questions and ask pupils to reproduce from memory. It was realized that encouraging enquiry, reasoning and problem solving in teaching Science has also to be reflected in the examinations.

It is hoped that in the next years, questions will be included that require problem solving and enquiry based skills.

3.11.3 Form 1 Entrance Examinations 1994 - Science Paper (English Translation)

Candidate's Number ....

ZANZIBAR REVOLUTIONARY GOVERNMENT

MINISTRY OF EDUCATION

FORM 1, ENTRANCE EXAMINATIONS, 1994

SCIENCE

TIME: 1.30 HOURS.

<u>INSTRUCTIONS TO CANDIDATE</u>

ANSWER ALL QUESTIONS IN THIS PAPER

THIS PAPER CONTAINS 8 WRITTEN PAGES

Candidate's Number ....

CHOOSE THE MOST CORRECT ANSWER AND WRITE THE LETTER IN THE BRACKET PROVIDED.

Example:

The gas that animals use most is

A. Carbondioxide
B. Oxygen
C. Hydrogen
D. Nitrogen (B)

1. Choose one set of living organisms without a vertebral column among the following set given:

A. Butterfly, tortoise, bat, mouse.
B. Snake, millipede, lizard, chameleon
C. Millipede, snail, cockroach, chameleon
D. Grasshopper, millipede, butterfly, snail.( )

2. What are the necessary needs for the life of animals.

A. Food, water and medicine
B. Food, air and medicine
C. Food, water and air
D. Protein, starch and oil ( )

3. Most insects have 4 stages in their life cycle. The correct sequence is.

A. Egg, larva, pupa, adult insect.
B. Larva, egg, pupa, adult insect.
C. Egg, pupa, Larva, adult insect.
D. Larva, pupa, egg, adult insect. ( )

4. Which is the most important difference between animals and plants ?.

A. Animals moves while plants don't.
B. Animals feed on food while plants don't.
C. Plants manufacture their own food while animals don't.
D. Plants have a short life cycle than animals. ( )

5. One among the following is not an excretory organ. Which organ is this ?.

A. Tongue
B. Skin
C. Lungs.
D. Kidney ( )

6. Roots are the most important part of the plant because:

A. They hold the branches of the tree.
B. They add the thickness of the stem
C. They make food.
D. They absorb mineral salts from the soil. ( )

7. After being measured by the doctor, Khatib, has been found to have a temperature of about 37°C. In Fahrenheit, this is equivalent to

A. 37°F
B. 69°F
C. 66.6°F
D. 98.6°F ( )

8. Sugar which has dropped in a sauce pan containing water can be separated by using which method ?

A. Boiling and evaporation.
B. Filtering the mixture.
C. Decantation.
D. Solidifying the mixture. ( )

9. Which among the following set of items are appropriate to use in measuring and recording the height of a growing plant in a shamba?

A. Ruler, pencil, book.
B. Ruler, pencil, ink.
C. Notebook, pencil, measuring, scale.
D. Notebook, ruler, and a piece of thread ( )

10. Std 8 pupils of Uroa School, did an experiment to find the factors that cause rusting. They did their experiment as shown in diagram I, II, III, IV, below. They left the experiment for one week.

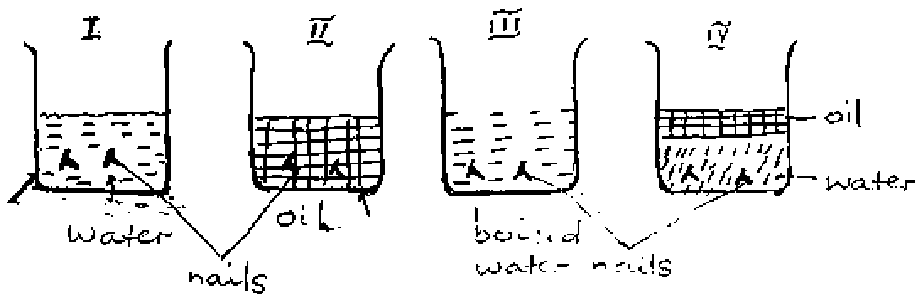

Rusting will occur in

A. Diagram I only.
B. Diagram II and III.
C. Diagram II and IV.
D. Diagram IV only. ( )

11. The density (gm/cm^3) of an object having a mass 2.06 gm and a volume 2.0 cm^3 is

A. 0.97
B. 1.03
C. 4.06
D. 4.12 ( )

12. Which among the following object is a 2^{nd} class lever?.

A. Human arm
B. Crowbar
C. Scissors
D. Wheel barrow ( )

13. One pupil in her experiment has sown some bean seeds in 3 different type of soils - loamy soil, clay and sandy soil. All had equal weight. She waters the plant with equal amount of water at the same time in the morning. In this expt, the student could be able to find.

A. That water is necessary for seed germination.
B. That the amount of water affect growth.
C. The type of soil which is good for planting beans.
D. The best time for watering bean seedlings. ( )

14. Which among the following statements is <u>false</u>?

A. Electric current is a flow of electron.
B. When the guitar strings are tightened, vibrations increase.
C. During eclipse of the sun, the earth is found between the sun and the moon.
D. Magnetism can pass through the paper. ( )

15. Choose among the following example below, that show the correct sequence of a food chain in living organisms.

A. Plant .... hen ...... grasshopper ...... cat.
B. Plant .... grasshopper .... hen ..... cat.
C. Cat .... grasshopper .... plant ...... hen.
D. Hen .... grasshopper .... plant .... cat. ( )

16. NPK fertilisers provide plant with the following nutrients except one. Which is this?

A. Calcium
B. Phosphorus
C. Potassium
D. Nitrogen. ( )

17. The load in a rod with one wheel has a weight of 90 Newton, and effort to be used will be 30 Newton. Therefore the mechanical advantage (MA) is

A. 90
B. 30
C. 60
D. 3 ( ).

18.

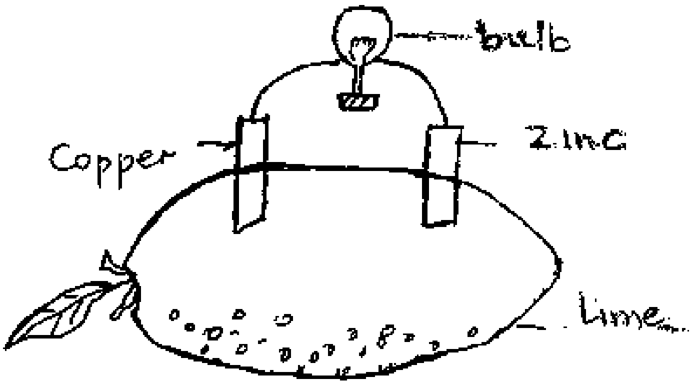

The diagram above shows how lime can be used to produce electricity. Which among the following is the correct sequence that show how energy conversion occur until the bulb gives out light?.

A. Electric energy ...... chemical energy ...... heat energy ...... light energy.
B. Chemical energy .... electric energy .... heat energy .... light energy.
C. Chemical energy .... heat energy .... electric energy .... light energy.
D. Light energy .... heat energy .... Chemical energy .... light energy. ( )

19. Haji can see very well distant objects but has a problem to see near objects, therefore the doctor advices him to wear glasses with:

A. convex lens
B. Concave lens.
C. Thin lens
D. Flat lens. ( )

20. Which among the beaks of the following birds have been correctly matched with the type of food it eats.

A.  .... for eating meat.
B.  .... for sucking nectar from flowers.
C.  .... for eating fish.
D.  .... for cracking seeds. ( )

SECTION B

Fill in the correct answer in the blank spaces.

21. Optic Nerve transmit .... messages to the brain while .... nerve transmit hearing messages to the brain.

22. Complete the table below.

Vertebrate	Body Covered with	Blood Type	Reproduction by.
Mammal	....	....	....
....	....	warm	lay eggs
....	moist skin	....	lay eggs
Reptile	scales	....	....

23. The diagram of the circuit below does not work. You are required to correct it. Draw the correct diagram.

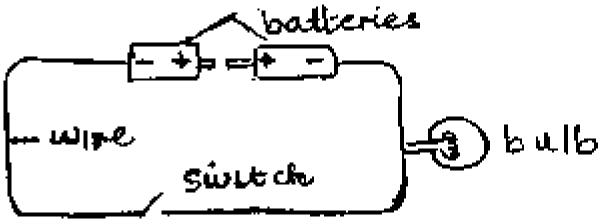

24. Look at the picture below, then answer the questions that follows.

Name two characteristics from the picture that show that the organism is living.

i) ....
ii) ....

25. Fill in the correct answer in the blank spaces.

i. Bulb uses .... energy. This is converted to ...... energy.
ii. Electric iron uses .... energy. This is converted to .... energy.
iii. Telephone uses .... energy. This is converted to .... energy.
iv. Television uses .... energy. This is converted to ...... energy.

26.

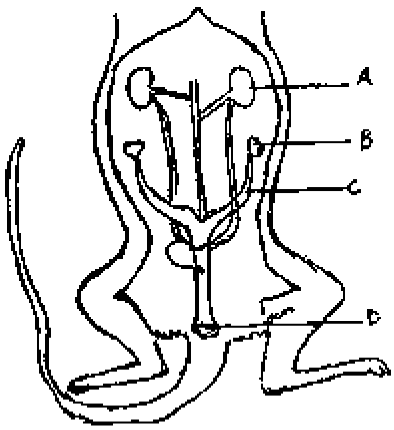

The diagram above shows the reproductive system of a female mouse. Write the name of parts labelled with letter.

A. ....
B. ....
C. ....
D. ....

3.11.4 Form 1 Entrance Examinations 1993 - Science Paper (English Translation)

S.M.Z

MINISTRY OF EDUCATION, ZANZIBAR.

FORM ONE ENTRANCE EXAMINATIONS, 1993.

SCIENCE

TIME: 1 HOUR 30 MINUTES.

INSTRUCTIONS.

ANSWER ALL THE QUESTIONS IN THIS PAPER.

THIS PAPER CONSISTS OF 3 PRINTED PAGES.

SECTION A.

CHOOSE THE CORRECT ANSWER AND WRITE ITS LETTER ON THE BLANK SPACES.

1. Blood is made up of ....

   A. White blood corpuscles and protein.
   B. Plasma, red blood corpuscles and white blood corpuscles.
   C. Water and salts.

2. Objects that allow electricity to flow are called ....

   A. Insulator
   B. Galvanometer
   C. Conductor

3. Bat is an animal that belong to the group ....

   A. Mammals
   B. Birds
   C. Reptiles

4. Matter is made up of ....

   A. Electrons
   B. Protons
   C. Atoms

5. Amoeba and paramecium are organisms which belong to a group .....

   A. Protozoa
   B. Reptiles
   C. Amphibian

SECTION B.

FILL IN THE BLANK SPACES.

1. The two types of skeletons are .... skeleton and .... skeleton.

2. Rusting can be prevented by ....

3. Generator produce direct current ....

4. Skin is made up of ..... parts, which are .... and ....

5. Food in an animal pass through the ....

SECTION C.

ANSWER THE FOLLOWING QUESTIONS.

1. Mention the five sense organs in living organism.

....

2. Briefly explain the meaning of balanced diet.

....

3. Draw

(a) a short sighted eye.
(b) a diagram of a lens to show how short sighted is corrected.

4. With an aid of a diagram, briefly explain how to make a transformer.

5. Label the parts indicated with letters.

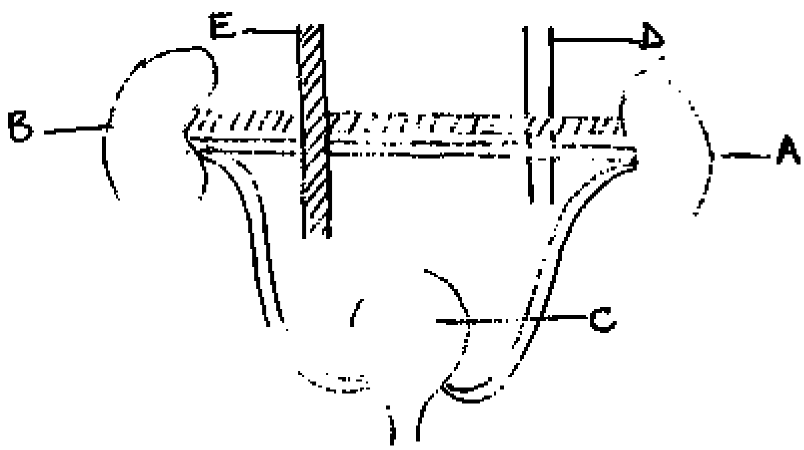

3.12. Zimbabwe

3.12.1. Overview

End of Primary School Examination

1.	**Title of examination:**	Grade 7 Examination
2.	**Amount of fees charged:**	Nil
3.	**Examination after years in primary school (6, 7, 8 years):**	7 yrs
4.	**Children's entry age in primary school:**	5 1/2-6 yrs
5.	**Number of pupils sitting examination in 1994:**	306,706
6.	**Examination subjects offered:**	6 subjects in 4 papers: • Shona or Ndebele • Mathematics • English • General Paper (Religious & Moral Education/Social Studies, Science & Agriculture)
7.	**Language of examination:**	English (except for African languages)
8.	**Institution setting the examination questions:**	Examinations Branch, Ministry of Education and Culture
9.	**Have there been any reforms in the examination questions?**	Yes
	When? (year)	1990
	What kind?	General Paper (consisting of items from Social Studies, Science and Agriculture, Religious and Moral Education) and African languages (Shona or Ndebele) were introduced in the Grade 7 Examinations.
10.	**Stages of development of examination questions (please describe):**	• Items are generated by regional panels and Curriculum Development Unit. Items are moderated at regional panel meetings and selected for presentation at National Panel (teachers are involved). • National Panel consisting of representatives from regional panels moderate items submitted by regional panels and select them for constructing papers to be presented. • National Panel selects items that have been pre-tested for final examinations.

11.	**Type of examination questions and distribution of different kind of questions.**	Multiple-choice items only: 30% knowledge 40% comprehension 20% application 10% problem solving
12.	**Is continuous assessment incorporated in the final examination?**	Yes [ ] No [x]
13.	**Are examination items pretested?**	Yes [x] No [ ]
14.	**Which professional groups are involved in setting the examination questions?**	• Primary school teachers • School inspectors • Curriculum developers in Curriculum Development Unit (CDU) • Examination specialists
15.	**Are the same professionals who set the examination questions involved in marking papers?**	Yes [ ] No [x]
	If no, who marks the papers (state)?	Marked by optical mark reader/computer.
16.	**How are examination results used for improving teaching in primary schools?**	• Examination papers that have been written by candidates remain in the school for future use of teachers or pupils. • Reports on performance of candidates in an examination are circulated to schools.
17.	**To what other uses are the examination results put?**	Evaluation of primary school system for national government and relevant section of Ministry of Education, e.g. district education offices.
18.	**Main problem with Primary**	• Items have tended to test recall at the expense of other mental skills. • Pupils may not take them seriously where the examinations are not used for selection. • Because of large candidature multiple-choice tests only are administered. Skills that are not well measured by such questions are therefore not measured in the primary examination.

3.12.2. Analysis of End of Primary Education Examination in Zimbabwe

by Nelson Muzambi, Examinations Branch, Ministry of Education

1. The duration of primary education in Zimbabwe is 7 years. Assessment of pupils from Grade 1 (year 1) to Grade 6 (year 6) is entirely school-based, with each school being responsible for producing end-of-term and end-of-year reports for each pupil.

2. The Grade 7 Examinations, the end of primary education examinations, are set by the Examinations Branch. Authority for setting, moderating, administering, marking and awarding is vested in the Secretary for Education and Culture, with the Examinations Branch as the executing body.

3. The purpose of the examination is to certify that pupils have completed seven years of primary education and to record levels of individual pupil competency in four subject areas. The examination is not used as a selection tool because promotion is automatic to the next grade. The outcome of automatic promotion is that many pupils who proceed to their first year of secondary education (form 1) do not have the skills to function at that education level.

4. Pupils in Grade 7 take four tests: English, Mathematics, an African language (Shona or Ndebele) and a General Paper. The General Paper comprises items from Environmental Science, Social Studies and Religious and Moral Education syllabi. All the tests are written in English with the exception of the African languages. Each subject test (examination) is composed of one paper of 50 multiple-choice questions. Pupils are allowed two hours per paper.

5. The multiple-choice questions are written by nine regional panels, consisting of experienced teachers and education officers (supervisors). Each region is responsible for selecting a certain number of items but with little guidance from the Examinations Branch.

6. Each regional panel is represented at national subject panel meetings arranged by the Examinations Branch. At these meetings, questions for the final examination papers and pre-test papers are selected, based on a set of skill assessment objectives.

7. All final examination questions have to be pretested before they are administered to the candidates. Computerised item analysis is done on an old system which determines each item's discrimination index, facility index and P-value. Items that perform well in pretests are the only ones that are selected for the final papers to ensure that the final product suits the broad spectrum of candidates in the schools. Multiple-choice tests were introduced in the Grade 7 Examination in 1984. The reaction from parents and other concerned parties was mixed, with a significant number criticizing the tests because they thought they lacked validity and could be done by »idiots«.

8. The Government printer in Harare prints each year's examinations in one colour on newsprint. The Examinations Branch distributes the examination papers via the postal service to each of the 5,800 schools nationwide. Teachers administer each subject as stipulated on the examinations timetable. The teachers are not given training in test administration or security. Used examination papers are left at the schools for use by both teachers and pupils.

9. Scanner sheets completed by the candidates are marked by optical mark readers. The Branch currently produces score reports from the data tape on an old processing system. The score reports consist of the certificates given to each pupil who completes the test. The certificate lists a grade of 1-9 for each subject convertible into a 'percentage equivalent' according to a scale printed on the back of the certificate. A grade 1-6 represents a pass. Scores are not compared between groups such as schools or regions.

10. A comprehensive report on the Grade 7 Examination is written at the end of each year. The information in the report is meant to help Grade 5-7 teachers improve teaching of the various subjects. The report includes statistics on pass rate and comments on the performance of candidates in the separate subjects.

3.12.3. Examination Problems Encountered

by Margareter Chirongoma, Examinations Branch, Ministry of Education

1. There is general lack of expertise in the multiple-choice item construction.

2. There is need to produce more comprehensive reports on the Grade 7 Examination for every subject pointing out the strengths and weaknesses of the items. This would go a long way to assist the teachers to improve their ability to develop items for school based assessment.

3. As for the General Paper 50 items are not enough to effectively test four subjects, namely,

- Social Studies
- Environmental Science (incl. Agriculture)
- Religious and Moral Education
- Home Economics.

In the »General Paper« Science and Agriculture are examined from question 31-50, which is only 20 items. So it is almost impossible to give a good coverage of the syllabus. Therefore there is need to test each subject separately as has been suggested by teachers who completed the questionnaire sent out to schools to evaluate the 1993 Grade 7 Examinations.

4. Scores from continuous assessment do not contribute to the final grade such that the grade one acquires in the national examination may not be a true reflection of one's performance.

5. Language development is hindered since the objective tests do not promote free expression.

Printed by the Government Printer, Harare

3.12.4 Grade 7 Examination 1994 - General Paper (Science and Agriculture)

MINISTRY OR EDUCATION AND CULTURE
ZIMBABWE

GRADE SEVEN EXAMINATION, 1994
GENERAL PAPER

Date: Wednesday, 19 October 1994   Time: 2 hours

INSTRUCTIONS TO CANDIDATES

1. Read ALL the instructions carefully.

2. DO NOT open this booklet until you are told to do so by the invigilator.

3. Use ONLY a 2HB pencil for all entries on the answer sheet.

4. If you wish to change your answer, ERASE it COMPLETELY with a pencil rubber and then shade the new choice.

5. If MORE than ONE circle is shaded for any one answer, that answer will be regarded as WRONG.

6. When you are told to start, choose ONE correct answer from the suggested answers and shade it VERY DARK.

7. If you DO NOT understand the instructions ask the invigilator to explain them to you BEFORE you start.

8. Answer ALL the questions on the separate answer sheet provided.

This question paper comprises 18 printed pages.

Questions 1-30 refer to Religious and Moral Education and Social Studies.

Use figure 1 to answer question 31.

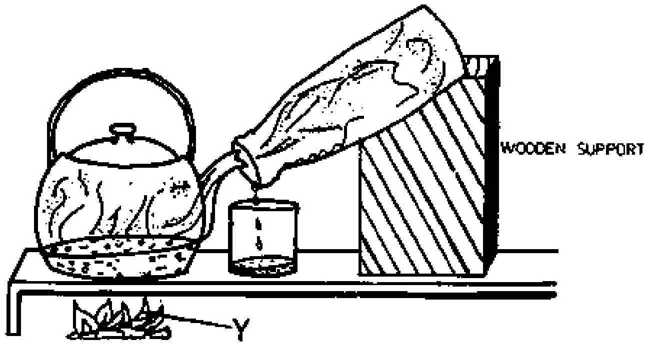

Figure 1

31. What is produced at Y that causes the water to boil?

A. Heat.
B. Light.
C. Smoke.
D. Steam.
E. vapour.

32. Which of the following is a water-borne disease?

A. Cold.
B. Dysentery.
C. Malaria.
D. Measles.
E. Tetanus.

Use figure 2 to answer question 33.

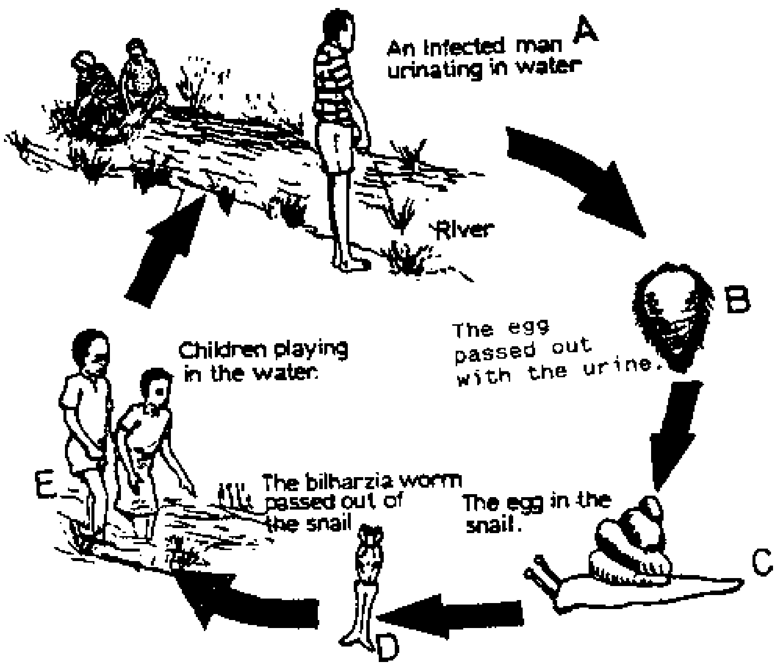

Figure 2

33. At which point of the bilharzia cycle A, B, C, D or E does the bilharzia parasite enter the body?

Use figure 3 to answer question 34.

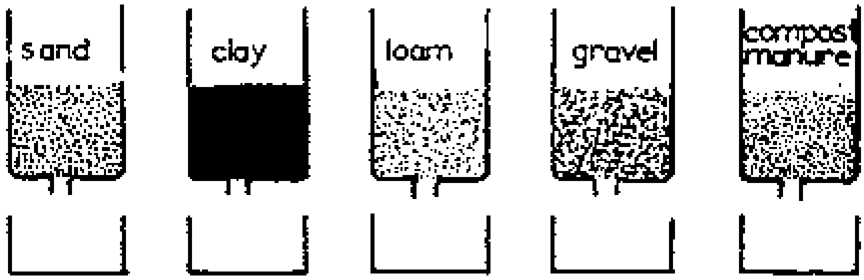

Figure 3

34. Equal volumes of water are poured into equal volumes of different kinds of substances. After a set time, which substance will have allowed the least amount of water to go through?

A. Clay.
B. Gravel.
C Loam.
D. Manure.
E. Sand.

Use figure 4 to answer question 35.

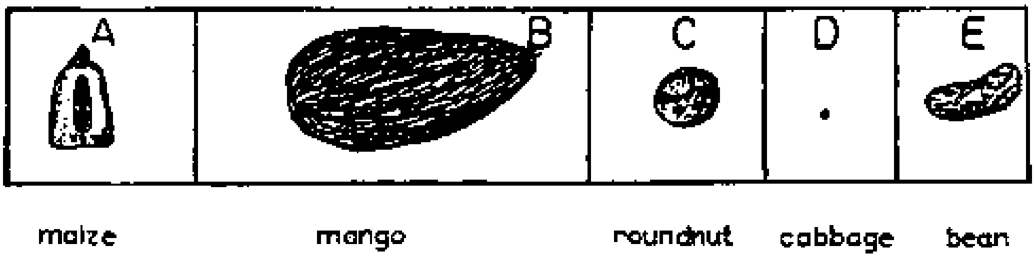

Figure 4

35. Which seed is likely to germinate last under the same conditions?

Use figure 5 to answer question 36.

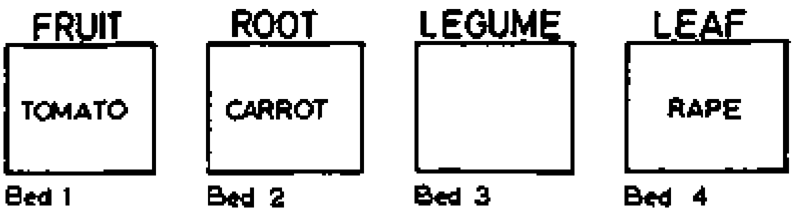

Figure 5

36. This diagram shows a four year crop rotation for a garden. In this rotation which crop would be in bed 3?

A. Beans.
B. Cabbage.
C. Lettuce.
D. Onion.
E. Spinach.

37. Which weather condition is best for transplanting seedlings.

A. Cool and dry.
B. Hot and humid.
C. Cloudy and damp.
D. Dry and calm.
E. Windy and dry.

38. To which plant family do maize, rice and wheat belong?

A. Grass.
B. Fruit.
C. Legume.
D. Tuber.
E. Vegetables.

39. Green plants need the following to make food and grow

A. Bees, sunlight and air.
B. Soil, worms and water.
C. Sunlight, air and water.
D. Manure, air and sunlight.
E. Clay, water and air.

40. Mulching helps the soil to

A. lose a lot of water.
B. shelter the roots.
C. keep moisture for a longer period.
D. lose water at a faster rate.
E. become water-logged.

Use figure 6 to answer question 41.

Figure 6

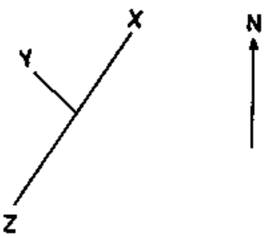

41. The direction of X from Y is

A. North.
B. North East.
C. North West.
D. South.
E. South West.

42. If a transparent plastic bag is tied over some leaves of a living plant what will be seen in the plastic bag after several hours?

A. Air.
B. Dry leaves.
C. Insects.
D. No change.
E. Water drops.

Use figure 7 to answer question 43.

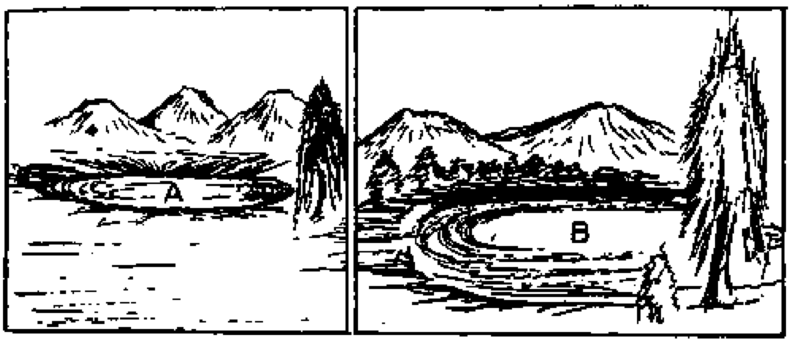

Figure 7

43. Pools A and B are in the same area. They have equal amounts of water. Why does pool B lose more water by evaporation than pool A?

Because pool B

A. has strong winds over it.
B. is in a very dry place.
C. stores much more water.
D. is not sheltered by the hills.
E. has a bigger surface area.

44. What type of fuel do steam engines use?

A. Coal.
B. Diesel.
C. Electricity.
D. Paraffin.
E. Petrol.

The diagrams in figure 8 show simple electric circuits.

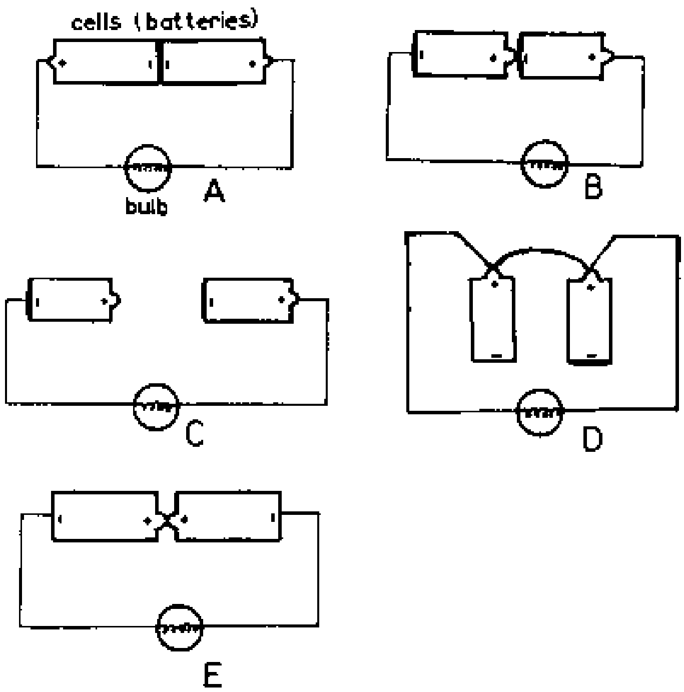

Figure 8

45. Which bulb will light up?

Use figure 9 to answer question 46.

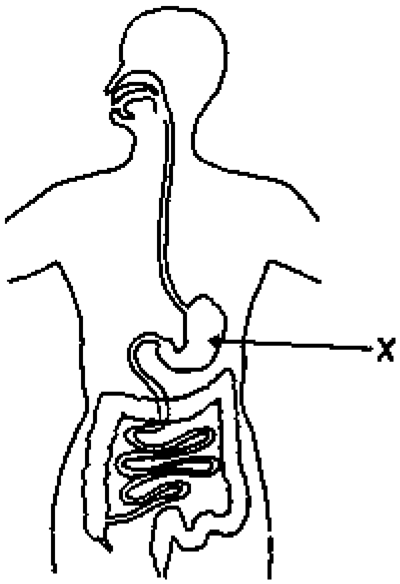

Figure 9

46. Name the part labelled X.

A. Heart.
B. Intestines.
C. Liver.
D. Lungs.
E. Stomach.

Use the map of Zimbabwe in figure 10 to answer the question that follows.

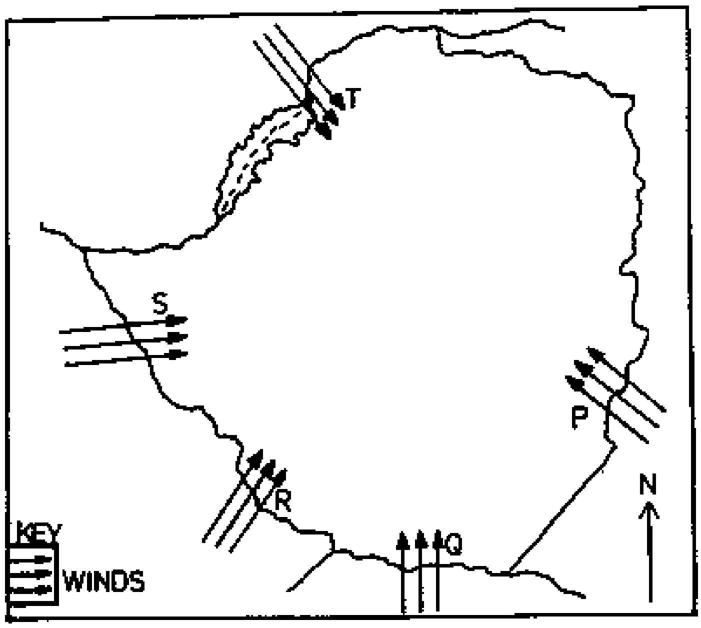

Figure 10

47. Which of the winds P, Q, R, S or T bring most rains to Zimbabwe when they meet:

A. T and S.
B. R and S.
C. R and Q.
D. R and T.
E. P and T.

48. Use figure 11 to answer question 48.

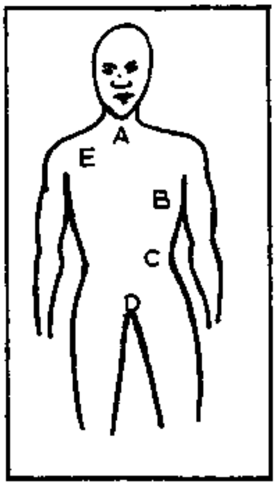

Figure 11

48. Which letter shows the position of the heart.

49. What should people do to make unprotected water safe for drinking?

A. Boil it.
B. Add salt.
C Keep it cool.
D. Let it settle.
E. Sieve it.

Use figure 12 to answer question 50.

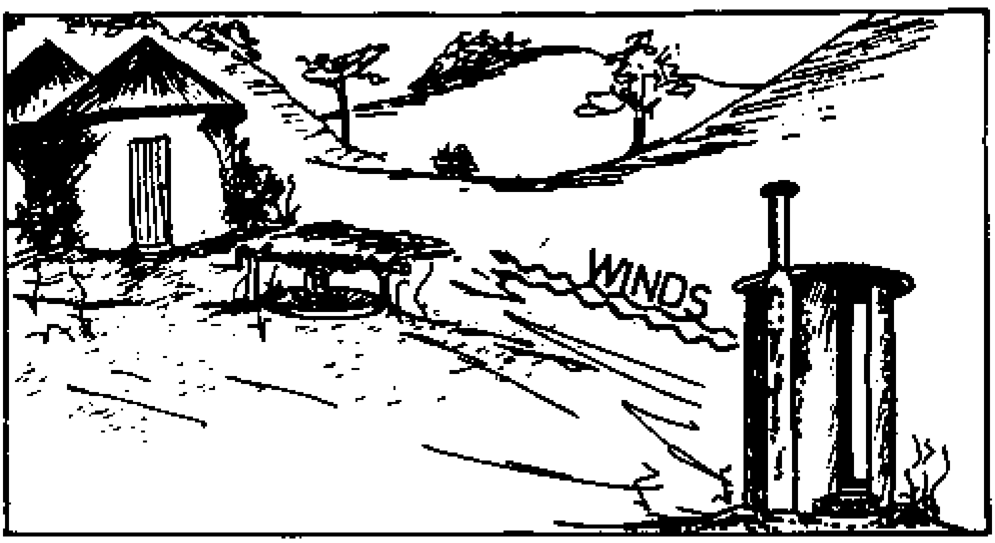

Figure 12

50. The winds of the area shown are mostly coming from the east. The set up of the home is wrong because the

A. living huts are far from the toilet.
B. protected well is not supposed to be between the huts and toilet.
C. smell from the toilet is continuously blown to the huts.
D. toilet water will flow to the well.
E. toilet should be nearer to the well.

3.12.5 Grade 7 Examination 1993 - General Paper (Science and Agriculture)

MINISTRY OR EDUCATION AND CULTURE
ZIMBABWE

GRADE SEVEN EXAMINATION, 1993
GENERAL PAPER

Date: Wednesday, 20 October 1993   Time: 2 hours

INSTRUCTIONS TO CANDIDATES

*1. Read **ALL** the instructions carefully.*

*2. **DO NOT** open this booklet until you are told to do so by the invigilator.*

*3. Use **ONLY** a pencil for all entries on the answer sheet.*

*4. If you wish to change your answer, **ERASE** it **COMPLETELY** with a pencil rubber and then shade the new choice.*

*5. If **MORE** than **ONE** circle is shaded for any one answer, that answer will be regarded as **WRONG.***

*6. When you are told to start, choose **ONE** correct answer from the suggested answers and shade it **VERY DARK.***

*7. If you **DO NOT** understand the instructions ask the invigilator to explain them to you **BEFORE** you start.*

*8. Answer **ALL** the questions on the separate answer sheet provided.*

This paper comprises 13 printed pages.

Printed by the Government Printer, Harare.

Questions 1-30 refer to Religious and Moral Education and Social Studies.

Use figure 1 to answer question 31.

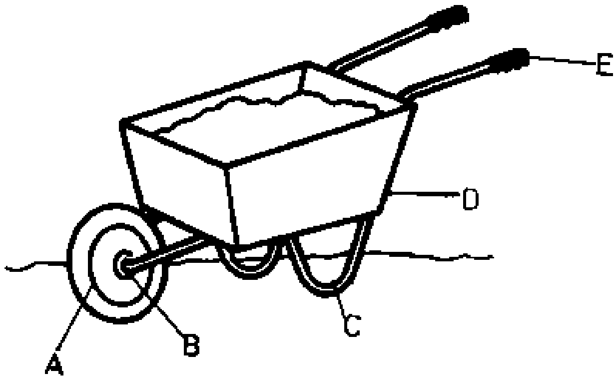

Figure 1

31. Which part of the wheelbarrow has to be greased in order to reduce friction?

32. Bilharzia parasites live in one of the following creatures,

A. water spiders.
B. water worms.
C. water slugs.
D. water snails.
E. water scorpions.

33. The shape of the earth is

A. a circle.
B. an oblong.
C. a sphere.
D. a trapezium.
E. flat.

34. The sun's energy is called

A. chemical.
B. electrical.
C. hydro-electric.
D. thermal.
E. solar.

35. People are scared of AIDS because

A. the disease has no cure.
B. the disease cannot be easily cured.
C. the disease is foreign to Zimbabwe.
D. doctors fear to touch patients with it.
E. it kills only young people.

36. Which crop gives most proteins?

A. Maize.
B. Soya beans.
C. Sorghum.
D. Wheat.
E. Millet.

37. The low land between mountains or hills is called a

A. field.
B. forest.
C. plateau.
D. slope.
E. valley.

38. Animals that eat other animals are called

A. browsers.
B. carnivores.
C. grazers.
D. herbivores.
E. insect eaters.

Use Figure 2 to answer question 39.

Figure 2

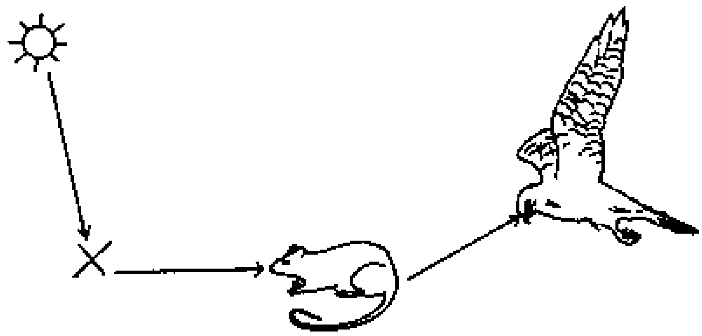

39. What part of food chain represented by X is missing?

A. Air.
B. Carnivore's.
C. Plants.
D. Soil.
E. Water.

40. If you are outside and there is lightning what must you do to protect yourself?

A. Stand very still.
B. Shelter under a tree.
C. Run away fast.
D. Crouch down.
E. Don't have enemies.

41. A class recorded the number of boxes of tomatoes it sold for three days per week for three weeks. The following is their recording.

DAY	WEEK 1	WEEK 2	WEEK 3
MONDAY	𝍸 𝍸 I	𝍸 𝍸 III	𝍸 𝍸
WEDNESDAY	𝍸 I	𝍸 II	𝍸 III
FRIDAY	𝍸 𝍸 III	𝍸 𝍸 𝍸	𝍸 𝍸 II

If the class wanted to sell the most tomatoes which two days should they choose?

A. Wednesday and Friday.
B. Tuesday and Thursday.
C. Monday and Thursday.
D. Monday and Friday.
E. Wednesday and Monday.

42. Which of these is man-made?

A. Cotton.
B. Linen.
C. Nylon.
D. Silk.
E. Wool.

43. What do green plants use to make plant food?

A. Air, food, sunlight.
B. Food, roots, water.
C. Roots, sunlight, air.
D. Soil, air, sunlight.
E. Water, sunlight, air.

44. What must be done with empty pesticide containers?

A. Clean them.
B. Destroy them.
C. Store food in them.
D. Store water in them.
E. Sell them to others.

45. It is good to grow plants in fish ponds because

A. fish like small water plants in a pond.
B. of some fish in the pond.
C. oxygen given off by plants is used by the fish.
D. the green colour of the plants attracts fish in the pond.
E. the plants help the fish to swim.

Use figure 3 to answer question 46.

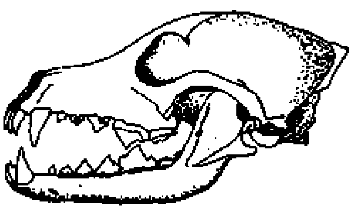

Figure 3

46. The skull is likely to be that of an animal that fed on

A. other animals.
B. tree leaves.
C. house flies.
D. earth worms.
E. tall grass.

Use figure 4 to answer question 47.

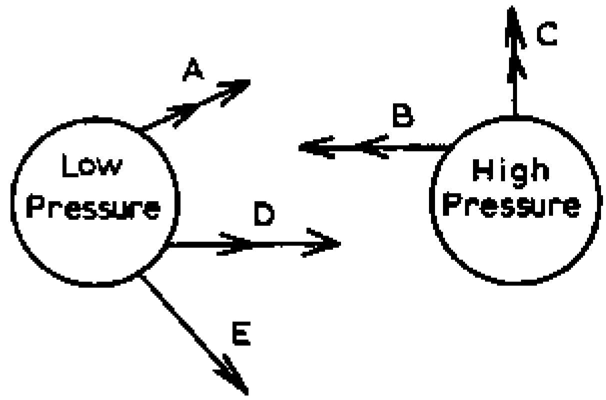

Figure 4

47. Which arrow shows the direction the wind will blow to?

Use figure 5 to answer question 48.

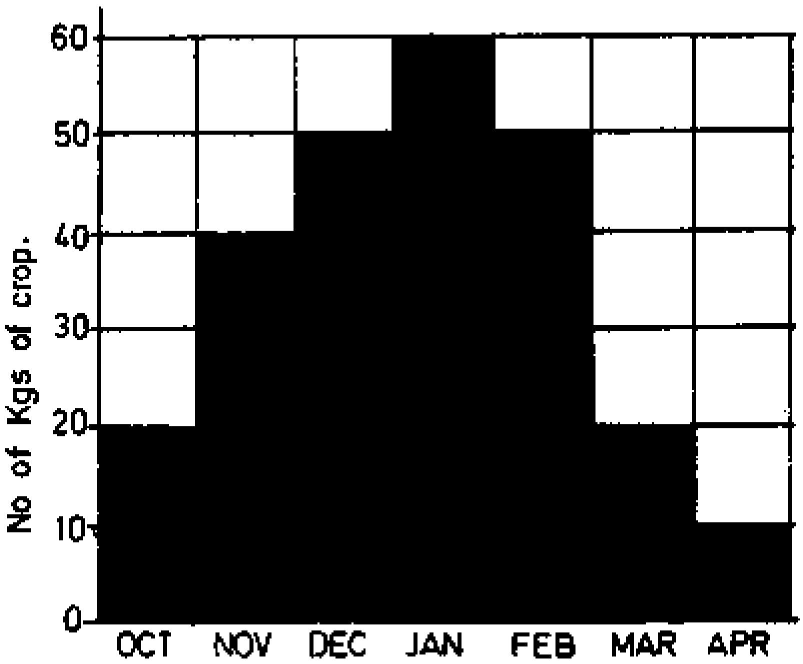

Figure 5

48. The graph shows the number of kilograms of a crop harvested. Choose a statement true of the graph.

A. The largest harvest was in February.
B. 20Kg of crop was harvested in April.
C. The second largest harvest was in January.
D. The largest harvest was in January.
E. November had the largest harvest.

Use figure 6 to answer question 49.

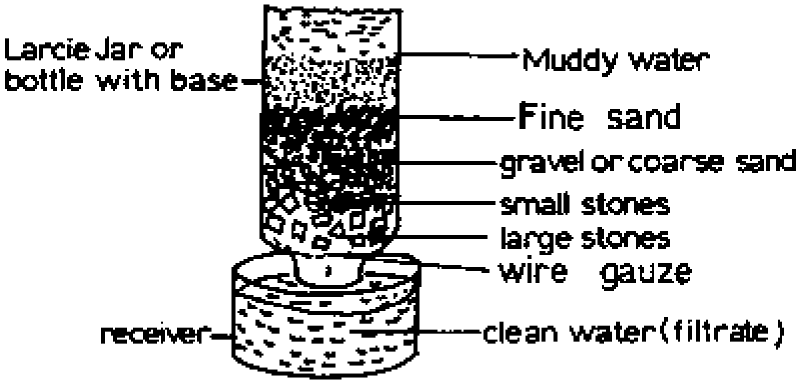

Figure 6

49. During filtration of water, fine sand is put in the filter because it

A. does not allow the dirt particles to pass through.
B. holds the larger pebbles and stones.
C. helps water run easily.
D. is not washed away by the water.
E. takes away salt from the water.

Use Figure 7 to answer question 50.

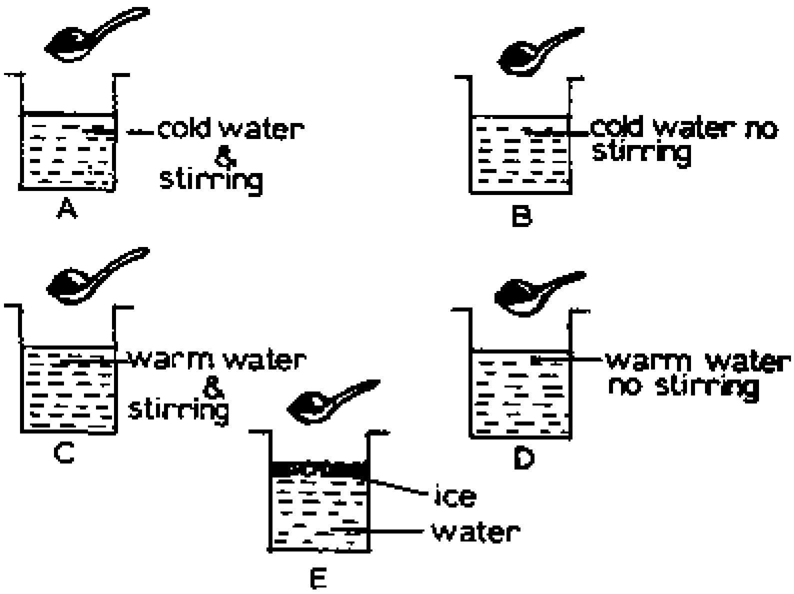

Figure 7

50. The jars in the diagram contain equal amounts of water. In which of the jars will table salt dissolve fastest?

A.
B.
C.
D.
E.

4. Examples of Follow-up Communications after the Examinations

4.1. Kenya Certificate of Primary Education (KCPE) 8-4-4 K.C.P.E. Newsletter 1992 (abstracts)

by Research Section, Kenya National Examinations Council

THE KENYA NATIONAL EXAMINATIONS COUNCIL
8-4-4
K.C.P.E
NEWSLETTER
1992

Introduction

The Kenya National Examinations Council has been producing KCPE Newsletters for the last six years. During this time, classroom teachers have had access to information about pupils' weaknesses in examinations. Teachers should have realised that pupils generally make the same type of mistakes and tend to be weak in certain areas of the syllabus. In the past, possible causes of these mistakes and possible approaches to teaching that would improve learning and hence performance have been suggested.

Teachers have, no doubt, obtained a lot of useful information from both formal and informal assessment of their pupils. The Newsletter is not meant to be a one way form of communication. It is meant to initiate dialogue between the Kenya National Examinations Council and classroom teachers.

We would like to encourage teachers to send to us their suggestions as to why pupils continue to perform poorly in certain areas of the syllabus in spite of our highlighting their weaknesses in these areas and even recommending corrective measures. We would like teachers to make use of the newsletter by making constructive suggestions and recommendations so that their experiences can benefit many teachers. They could, for example, suggest those methods of teaching that they have used and proved effective in enhancing the learning of those topics that pupils often have problems with. They could also give pupils' weaknesses that have not been highlighted in these newsletters. The information we are requesting teachers to provide could be sent to the Council, as a separate report, together with the tear-off post-examination questionnaire provided at the back of the newsletter which we encourage teachers to continue responding to.

Science

INTRODUCTION

The Science section of the Science and Agriculture paper was set in accordance with the general aims stated in the syllabus that have to be achieved over the 8-year primary education cycle. It tested the various skills that the candidates were expected to have acquired during their 8 years of primary education. The skills were tested using different content areas from the syllabus.

Table 1 shows these skills and the performance of the candidates in each skill. Similar information is also included for the 1990 KCPE for purpose of comparison.

Table 1

MAIN SKILLS TESTED	MEAN % OF CANDIDATES SCORING CORRECTLY	
	1990	**1991**
Recall	49.20	47.94
Comprehension	53.40	53.47
Application	29.12	39.40
Higher abilities (analysis, synthesis & evaluation)	63.04	60.30

From the table above, it can be observed that the performance of the candidates was poorer in those questions that tested application of knowledge in the two years. Teachers should therefore pay more attention to the application of the knowledge and skills that the pupils learn to their everyday life experiences.

OVERALL PERFORMANCE

An indication of performance in each of the 30 Science items is shown in Figure 6. In this figure, the relative difficulty of each item can be seen at a glance. In addition, the performance of the candidates in the 1991 KCPE Science section is given in Table 2 below. This is based on a random sample of 24,136 candidates. The 1990 performance is also provided in the table for comparison.

Table 2

	1990	**1991**
MEAN RAW MARK/30	15.02	14.78
STANDARD DEVIATION	4.13	4.48

From table 2, the following conclusions could be made:

(i) The overall performance in 1991 is comparatively lower although the spread of the candidates is slightly better.

(ii) there is no significant difference in performance in the two years.

Question 18

18. Fatuma raised some water from a well using a winch like the one shown in the diagram below.

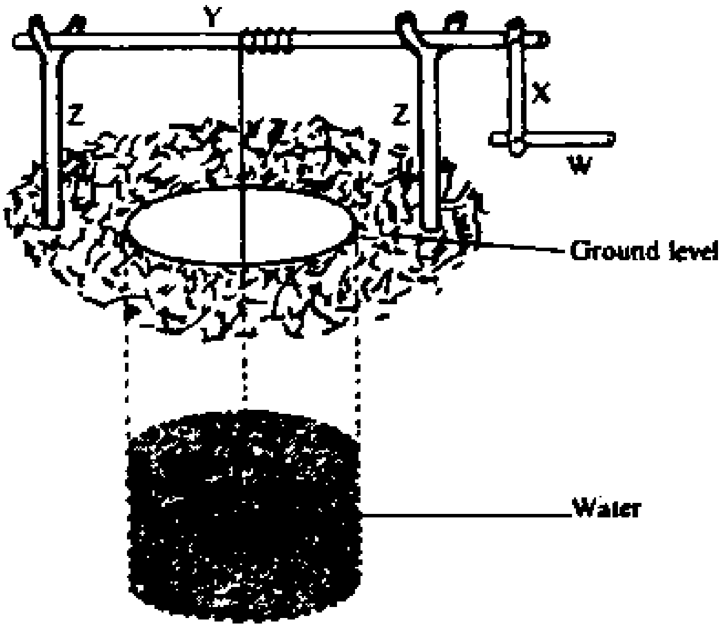

Which one of the following would help her to reduce the effort needed to raise the water? Increasing the length of the part labelled

A. W
B. X
C. Y
D. Z

RESPONSE PATTERN

Option	A	B*	C	D
% choosing the option	47.13	18.61	19.93	13.54
Mean mark in other questions	14.05	17.29	13.84	15.48

The question was testing the application of knowledge on machines. To choose the correct answer, the candidates were expected to understand the relationship between the effort used and the effort distance. The effort is inversely proportional to the distance through which it moves. Thus, the longer the part labelled X is, the less the effort used.

About 50% of the candidates in the sample chose option A implying that the effort distance is the part labelled W which is incorrect. Others thought the part labelled Y is the effort distance. Such a confusion could only result from pupils' lack of knowledge on simple machines. Pupils cannot understand this topic fully if they are taught by chalk and talk method. They should be given a chance to do things and find out for themselves.

Question 26

26. The slowest way of recycling carbon in sawdust is by

A. putting the sawdust in the cowshed
B. putting the sawdust in the shamba
C. using the sawdust in a jiko for cooking
D. using the sawdust for making hardboards.

RESPONSE PATTERN

Option	A	B	C	D*
% choosing the option	20.30	26.09	23.47	29.21
Mean mark in other questions	14.87	14.99	13.30	15.82

This question was testing the candidates' knowledge on what happens to sawdust under different conditions. It was scored correctly by the bright candidates. The response pattern also shows that the mean mark in the rest of the question was a mark or two about the sample mean. This indicates that there was an element of guessing by most candidates. This would result from lack of understanding of what recycling of carbon in sawdust means. The correct option, D, was missed by many candidates probably due to their ignorance of what hardboard is. The poor performance on this item could also have resulted from the candidates' choosing an answer in haste before they could clearly understand what was being asked for. The word »slowest« in the stem was key to choosing the correct answer. Thus there is need for teachers to urge their pupils to try to understand what is being asked for before choosing an answer.

Question 27

27. The diagram below represents a periscope, an object and an observer's eye.

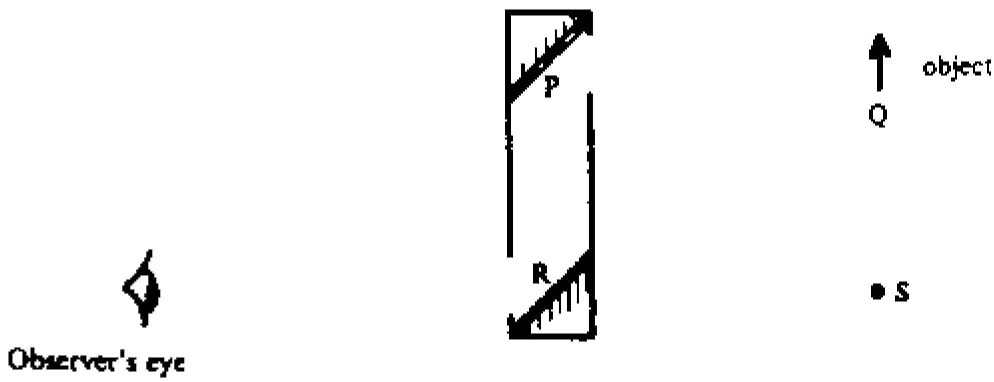

The image of the object as seen by the observer will appear at

A P
B Q
C R
D S

RESPONSE PATTERN

Option	A	B	C	D*
% choosing the option	16.84	15.10	51.26	15.99
Mean mark in other questions	13.72	12.82	15.86	14.50

A periscope uses plain mirrors and therefore the candidates were expected to use their knowledge of the properties of a plain mirror to answer this question. The small percentage of candidates who scored this item correctly shows that most candidates did not have this knowledge. More than half of the candidates in the sample chose option C which shows that the image is formed on the mirror. Anyone who has ever used a plain mirror to view himself/herself knows that this is not true. One's image always appears to be formed behind the mirror. Simple experiments done by the pupils using plain mirrors would help them to know that the image of an object placed in front of a plain mirror is formed behind the mirror. Thus teachers should seize every possible moment to have their pupils perform simple experiments to make their acquisition of scientific concepts easier and faster.

<u>Question 28</u>

28. Study the diagram of the food web below and answer the question that follows.

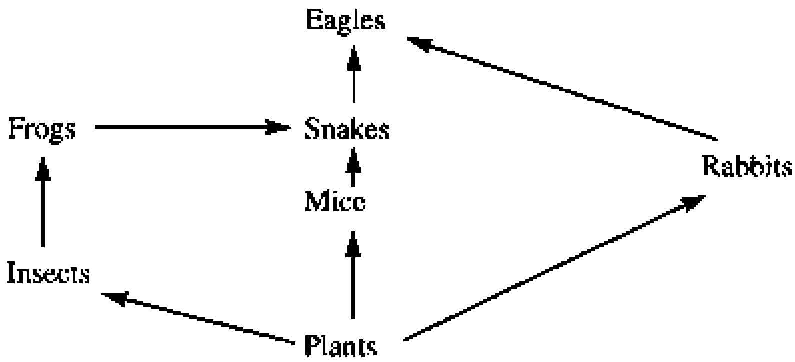

Which of the following animals should be most abundant in the food web?

A. Insects
B. Snakes
C. Frogs
D. Rabbits

RESPONSE PATTERN

Option	A*	B	C	D
% choosing the option	10.70	65.89	7.70	14.84
Mean mark in other questions	14.84	15.15	13.87	13.75

The candidates were expected to know that a food web is a complex feeding relationship of organisms consisting of several food chains. In each food chain, the most abundant organisms are those at the lowest trophic level and the numbers of organisms decrease as one goes up the food chain. In this question, insects, mice and rabbits occupy the same trophic level, that is, they all feed on plants. Ideally, their numbers are expected to be similar but in this food web, snakes and eagles have an alternative source of food. Snakes feed on frogs and mice while eagles feed on snakes and rabbits. On the other hand, frogs have no alternative source of food for they feed only on insects. Thus insects should be more abundant compared to mice and rabbits because they are the only source of food to the frogs.

The fact that about 65% of the candidates chose option B shows that they did not understand how numbers of organisms in a food web vary depending on the trophic level a particular organism occupies. To help the pupils understand clearly feeding relationships and their influence on the numbers of organisms, teachers should approach this topic from a practical point of view. A small scale ecological study would help pupils to understand better than if food webs and food chains are explained merely by use of drawings on the chalk board.

GENERAL COMMENTS AND ADVICE TO TEACHERS

1. Questions that were based on topics that ought to have been taught practically were poorly done in most cases. This indicates that some of the teachers could be teaching Science largely theoretically. It is advisable that teachers should try to have their pupils perform most of the simple experiments. This would enhance their acquisition of Scientific knowledge and formation of sound Scientific concepts. Science should be taught through an investigatory approach whenever possible.

2. Candidates' poor performance in some questions resulted from their lack of knowledge on the relevant syllabus topics. This could have been due to poor syllabus coverage or ineffective instruction. Teachers should plan their teaching to ensure that each syllabus topic is given the attention it deserves. Poor planning causes backlog of work which forces teachers to teach in haste, and hence disregarding the pupils' learning pace, only serves to confuse them.

3. Most of the questions that the candidates found difficult also required the candidates to reason out and extrapolate learned information. Teachers are advised, therefore, to train their pupils in the art of reasoning and applying learned information to new situations.

Agriculture

INTRODUCTION

The analysis of performance in Agriculture is based on a sample of 24,136 candidates drawn from both rural and urban schools. Table 1 below shows a summary of the overall performance in the Agriculture section of the Science and Agriculture paper.

Table 1

Year	1990	1991
RAW MEAN OUT OF 30	17.60	16.97
STANDARD DEVIATION	3.71	4.26

Table 1 shows that there was a slight drop in performance compared to the previous year. However, there was a better spread of marks as indicated by the bigger Standard Deviation. The performance of candidates in all questions is shown in Figure 7.

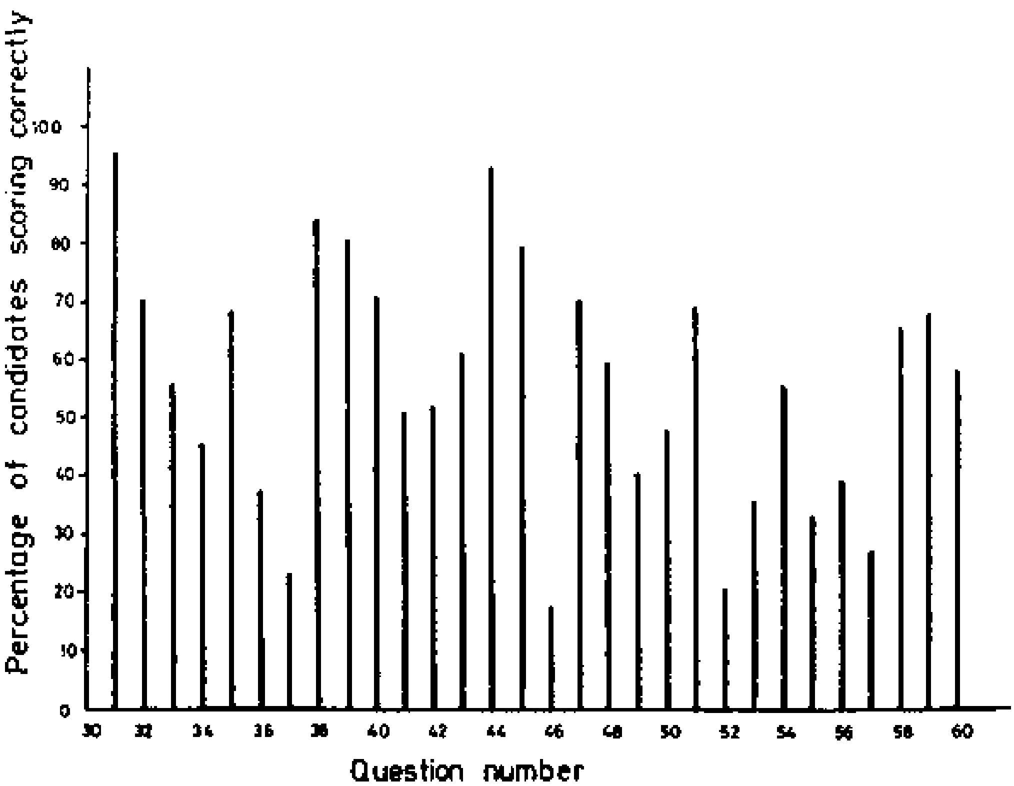

FIGURE 7 - AGRICULTURE

From Figure 7, it is evident that candidates found some questions more difficult than others. Questions which were scored correctly by less than 30% of the candidates are considered to be difficult. The performance of candidates in these questions is shown in Table 2.

Table 2

Question Number	37	46	52	55	57
% of candidates choosing correct response	23.90	17.28	21.82	31.16	27.85

ANALYSIS OF THE DIFFICULT QUESTIONS

In each question discussed, a response pattern showing the percentage of candidates choosing each of the four responses and their mean marks in other questions is given. The correct response in each question is indicated with an asterisk (*).

Question 37

37. Which set of symptoms given below indicates fowl pox disease in chicken?

A. Dullness and swellings on the head.
B. Diarrhoea and lack of appetite.
C. Crowding and stretching of the neck.
D. Diarrhoea and crowding.

RESPONSE PATTERN

Option	A*	B	C	D
% choosing the option	23.90	42.24	20.30	12.95
Mean mark in other questions	17.91	17.09	15.94	16.79

In this question, many candidates chose Diarrhoea and lack of appetite as symptoms for fowl pox disease in chicken. It is true that loss of appetite is a symptom for so many diseases and diarrhoea is also a symptom of a few intestinal diseases. However, these should not be confused with fowl pox disease which is manifested by characteristic swellings on the head. Pupils should be familiar with the general causes of livestock diseases, their symptoms and control measures since death of livestock is a major cause of loss in livestock production. The schools which may not have livestock are encouraged to take their pupils to institutions or farms where the required animals are kept.

Question 46

46. The illustration below shows a herdsman leading a bull for exercise using a halter.

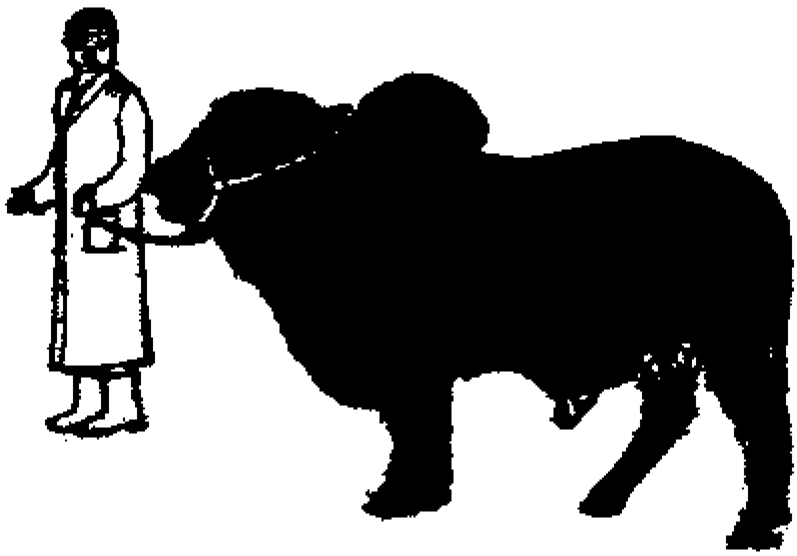

Leading a bull this way is NOT safe because the halter

A. will hurt the bull
B. will interfere with the feeding of the bull
C. will interfere with the breathing of the bull
D. is not sufficient to restrain the bull.

RESPONSE PATTERN

Option	A	B	C	D*
% choosing the option	7.76	35.74	38.54	17.28
Mean mark in other questions	16.06	17.06	16.81	17.78

A small percentage of candidates got the correct response in this question. They were the more able candidates as seen from their mean mark in other items. Responses B and C attracted high percentages of candidates. Since these responses referred to the halter interfering with either the feeding or the breathing of the bull, many candidates thought the halter is tied so tightly that it will interfere with the animal. Many candidates were merely guessing the answer. It can be deduced that many candidates had neither seen a halter, which is a specially designed rope for restraining cattle, nor handled bulls or seen bulls being walked around for exercise. The safest way to handle bulls is to fix a leadstick onto the bull-ring at the nose. Since the skin at the bull's nose onto which the ring is fixed is delicate, a bull will keep calm as any violent movement will hurt it. It should be borne in mind that bulls can be vicious and should always be handled with care. However docile they may appear to be, bulls should not be taken for granted.

Question 52

52. Which one of the following factors will influence the efficiency of farm labour?

A. Size of the farm.
B. Market for the produce.
C. The number of farming activities in the farm.
D. Training on relevant skills.

RESPONSE PATTERN

Option	A	B	C	D*
% choosing the option	27.28	13.08	37.17	21.82
Mean mark in other questions	16.95	15.27	16.68	18.69

The question was testing how to manage farm labour for efficient performance of farm work. Labour efficiency refers to the ability of workers to carry out a given task well and fast. To be able to do this, training on the relevant skills is necessary.

The response pattern indicated a lot of guess work. Response C attracted the highest percentage of candidates followed by A. The number of farming activities in the farm like growing maize, bananas, wheat, and rearing poultry and pigs cannot influence the efficiency of farm labour because in a well managed farm, labour is usually attached to a given enterprise. Alternatively, workers would be assigned a few tasks within one or more enterprises which the workers can manage.

Question 55

55. The reason for washing the udder with warm water before milking a cow is to

A. kill germs on the udder
B. enable the cow to produce more milk
C. remove dirt from the udder
D. soften the teats.

RESPONSE PATTERN

Option	A	B	C*	D
% choosing the option	36.35	7.08	31.16	22.92
Mean mark in other questions	16.58	16.14	17.65	17.03

This question was not so poorly done. It was scored correctly by slightly more than 30% of the candidates. Since it was a borderline case, it is also worth discussing.

The majority of the candidates chose the wrong option A. Warm water does not kill germs. The temperature of water capable of killing germs can scald the skin of the milkman and the cow's udder. It was the more able candidates who scored the right response. Apart from removing dirt from the udder, warm water also helps to stimulate milk let down in the udder.

Question 57

57. A farmer noticed his crop growing slowly and the leaves showing purple colouration. What plant nutrient was lacking in the soil?

A. Nitrogen.
B. Phosphorus.
C. Potassium.
D. Sulphur.

RESPONSE PATTERN

Option	A	B*	C	D
% choosing the option	48.35	27.85	17.51	5.63
Mean mark in other questions	17.20	17.74	16.25	15.76

The response pattern reveals that only 27.85% of candidates in the sample, who happen to be the most able ones got the correct response. A high percentage of candidates chose Nitrogen. Whereas deficiency of Nitrogen results in slow or stunted growth, purple colouration is never observed. A characteristic deficiency symptom for Nitrogen is yellow colouration. Some deficiency symptoms of major plant elements overlap. However, there are certain unique symptoms for each element. It is important to remember that all the macro-nutrient elements are very important for plant nutrition and pupils should learn about their roles, and deficiency symptoms exhibited in growing plants.

GENERAL GUIDANCE TO TEACHERS

It has already been pointed out that teachers should arrange for their pupils to visit farms or agricultural institutions. They should also cover all the parts of the syllabus.

We would add that teachers should give exercises based on various cognitive levels to their pupils. This will ensure that the pupils do not only memorise what they have been taught, but are also encouraged to think on their own and argue out answers to questions.

4.2. Lesotho Primary School Leaving Examination P.S.L.E. Report (May 1990) (abstracts)[1]

[1] This report has been compiled by the Evaluation, Research and Testing Division of the N.C.D.C. It has been prepared by the various subjects divisions at the centre using the item analyses prepared by the Education Statistics Unit at the centre.

by National Curriculum Development Centre (N.C.D.C.), Ministry of Education

NATIONAL CURRICULUM DEVELOPMENT CENTRE
(N C D C)
MINISTRY OF EDUCATION
1989 P.S.L.E. REPORT
MAY 1990

EVALUATION, RESEARCH AND TESTING DIVISION
P.O. BOX 1126
MASERU

Introduction

This is the first report of the Primary School Leaving Examinations (P.S.L.E.) since the establishment of the item bank. Since we would like to keep the reliability of the PSLE tests good we shall not quote the items that were in the tests but try to refer to whatever was in the item and needs attention, as closely as possible. After all we teach concepts and not items although items are used to find out if the concepts have been learnt or not. Examples, which are not necessarily the items which were in the tests, may be shown in the report.

Comments which can be addressed to: Education Testing Officer, N.C.D.C., P.O. Box 1126, Maseru 100 will be welcomed and useful to improve on this report.

This report is supposed to assist the teachers in improving on their instruction where necessary, or even to commend them where the instruction has been good. The report should serve as a mirror to the teachers, this is because the achievement of pupils does, in a way, reflect how effective the teaching has been. The teachers are thus encouraged to use this report maximally and give feedback, as much as they can.

In this report no comments have been made on Papers One and Two of English and Sesotho but hope to include them in future.

Science (General)

PURE SCIENCE

When referring to respiration in plants »stomata« and »breathing holes« should not be considered as different things altogether because in actual fact stomata are holes through which a plant breathes and it could be correct to say »stomata« are »breathing holes«.

The functions of the different parts of a seed, like the radicle, the inside, outer covering should be distinguished. The pupils seemed to confuse the functions of these parts.

Pupils still seem not to be sure of the different parts of a flower, they are not able to identify the different parts from a drawing. When teaching such topics it is necessary to have a sample of a flower for example or observe fertilisation by agents such as bees. The topic should be treated as practical as possible.

The distinction between an amphibian and a reptile need to be made since the pupils seem to confuse the two. There are some reptiles that are amphibians and those that are not.

Pupils seem not to be clear about when contraction takes place and when expansion takes place due to the effect of heat. For these two concepts to be learnt well, they should be taught practically, the pupils should observe expansion taking place and also contraction and be aware which effect of heat causes either of them and be sure which word is used for which process.

The changes from one state of matter to another do not seem to be very clear to the pupils like from solid to liquid, liquid to gas and the reverse. These should also be taught practically so that pupils can see as to what changes take place under which circumstances and the words used for the different changes.

The direction in a food chain should have meaning like »from - to«, which would imply that from one thing the next is produced or found. Various examples should be given to explain the chain. If the direction is in the opposite direction that seems to confuse the pupils.

HOME ECONOMICS

Pupils do not seem to be aware of all the different methods of cooking. All methods of cooking should be clearly explained to the pupils, even if they are not all demonstrated. These explanations should, of course, be accompanied by examples in which the different methods are used.

It seems that the functions of different foodstuffs have been well-taught. The term »complete food« does not seem to be familiar to some pupils. There is need to clearly explain what is meant by »complete food« giving the example of young ones that live only on one kind of food but survive. This implies that the one food that the young ones live on is sufficient for their livelihood hence it is a »complete food«. That is why breastfeeding is recommended more than anything else for babies.

The grouping of various food-stuffs should be clearly explained to pupils and they should be given regular exercises in classifying different foodstuffs. In other words, when given a certain kind of food pupils should be able to state what nutrient or nutrients the particular food has and thus be able to differentiate foods according to their nutrients.

HEALTH AND PHYSICAL EDUCATION

Pupils do not seem to know about diseases that are caused by pests that are not found locally. There is need when teaching about diseases caused by pests, to include even those diseases that are not found locally, like the tropical diseases.

What is taught about personal hygiene and can be done practically should then be taught practically and whenever possible let the pupils practise it at school, for example, washing one's hands when one comes from the toilet. Pupils do not seem to be aware of some of common personal hygiene practices which they could learn easily through practice.

There is need to explain to pupils the dangers of some of the unhygienic practices, for example it should be made clear why eating food from a rubbish pit or bin may be dangerous, that is, how it can cause diseases.

When teaching about care of the different parts of the body emphasis should be laid on improper common practices and these should be discouraged explaining what dangers those might have to the particular part of the body, for example, the rubbing of the eye when there seems to be a foreign particle that has entered the eye.

It seems not to be clear to pupils as to what exactly happens to people who die because there is a coal fire burning inside a closed house with no fireplace with a chimney. It should be explained that they die because of inhaling the poisonous gas, carbon monoxide and not necessarily because there was no oxygen to be inhaled, it should be made clear that it is the presence of the carbon monoxide in the blood system that causes the death.

Causes of the common diseases, especially those that may be epidemic should be known to the pupils, this will be of help to the students to advise on how epidemic diseases can be avoided where possible or to stop one if it is already taking place.

AGRICULTURE

When teaching pupils about the improvement of soil that is poor more emphasis should be laid on the use of manure rather that on the use of artificial fertilizers which only provide nutrients to the plants and not necessarily improving the quality of the soil.

The use of the term »seed bed« should be discouraged instead the term »nursery bed« should be used because it is more correct. More emphasis should be laid on the techniques of planting vegetables. It should be known which vegetables should be planted directly and which can be transplanted and it should be explained why.

In the teaching of the subject the use of common words should be encouraged. For example, the term »organic matter« could be used instead of »humus«. This is because some pupils seemed not to know the meaning of the word »humus«.

Candidates did not seem to be clear as to how one type of soil differs from another. The pupils should be taught in detail the characteristics of the different types of soil. They should know the structure, the capacity to hold water, their nutritive value and so on.

It seemed not to be clear to pupils the need to prune trees. It should be clearly explained why trees should be pruned, how they should be pruned and when they should be pruned. Advantages gained should be given as against disadvantages of unpruned trees.

TRIAL SCIENCE

The topic on magnetism seems to be well-treated, the pupils are aware of the basic concepts in magnetism, but they seem to lack the practical experience. Thus more practical work, even in the form of demonstrations should be done.

The meanings of the words »float« and »sink« do not seem to be distinguishable to the pupils. The distinction should be clearly made between these two words and this could be done with the assistance of a demonstration with a few substances that sink in certain liquids, especially water, and those that float in those liquids. Here should be included liquids that float on other liquids. It should be explained that floatation depends on density, for example, if the volume of a substance can be increased while its mass remains the same then its density decreases (it becomes lighter) and it can float, like an inflated balloon.

Pupils do not seem to be aware of the interdependence between the various species of nature. In the teaching of ecology emphasis should be laid on how one thing depends on the existence of another and how that second one depends on yet another thing. For example, animals depend on plants for food while the plants depend on the sun for energy.

Pupils only hear about certain instruments used for measuring various quantities in science but have no idea as to how the instruments look like, and thus how they work. As much as possible instruments used to make measurements should be shown to students and they should use them, if possible, but if it is not possible demonstrations should be made on their use.

Some pupils cannot make the difference between solution, solvent and solute. First, it is necessary to clearly explain the process of dissolving and then make the distinction between the solvent and the solute and hence the mixture, which is the solution.

Practical work should be done with balances to explain the state of equilibrium and of no equilibrium. It should be clear as to how the balance swings when there is a heavier load on one side.

Since breathing organs differ from animal to animal or between certain families of animals it should be clearly explained how these differ including the names used for different breathing organs.

Some pupils could not differentiate between certain animals according to their structure. More detail should be given when teaching about structure of different animals, for example, which are covered with scales, which with no bones, which with legs and so on.

The use of machines, that is, levers and pulleys should be done practically because the pupils seem not to be aware how some of the machines work.

The water retaining capacity of soil should be taught practically and the kind of soil suitable for making bricks should be explained to pupils. The fact that soil has air inside it should be shown practically.

Some pupils seemed not to be clear of the life stages of an insect, this could be taught as suggested in the syllabus.

The difference between perimeter and area should be clarified, as it seemed not clear to some pupils.

Conduction of electricity should be taught practically.

More emphasis should be laid in the teaching of friction, especially the effects of friction.

Pupils should be taught different kinds of clouds and also stars, it should not be taken for granted that they know them. For clouds, the examples given should be familiar to the pupils.

SUMMARY

The test with the highest reliability was Mathematics with a (Kuder-Richardson Formula 20) KR20 reliability coefficient of 0.861, this was followed by Trial Science with 0.816 then English Paper 3 with 0.768 next Social Studies with 0.751 and then Sesotho with 0.719 and lastly Science (General) with 0.711.

The following table shows the total score, the mean score and the standard deviation (S.D.) for each paper (here the Papers I and II for Sesotho and English have been included but Trial Science is not).

Paper	**Science**	**Social Studies**	**Maths**	**Sesotho Paper I**	**Sesotho Paper II**	**Sesotho Paper III**	**English Paper I**	**English Paper II**	**English Paper III**
Total Score	50	50	50	25	15	40	24	18	50
Mean	22,21	26,41	27,6	16,63	10,23	30,08	9,02	7,25	25,46
S.D.	7,09	7,56	8,53	2,77	2,05	4,24	4,23	2,42	7,55

The total number of candidates was 26,181 and the overall pass percentage was 82.3, that is 21,539 candidates passed. There were 2,774 first, 4,867 second and 13,898 third class passes and 4,642 failed.

UNEB
Newsletter Vol. 1, No. 2, 1993

- Report on PLE Work of Candidates
- Master the English Language to Master your Exams
- How a School can get a Centre Number
- Test Construction: Guidelines for Classroom Teachers

Shs. 1,500/= Registered as a Newspaper at G.P.O.

2.0 BASIC SCIENCE & HEALTH EDUCATION

In Basic Science and Health Education, the common errors encountered during the marking were:

- confused facts on parasites and vectors e.g. Question 44.

- The language and expression were poor, use of mother tongue in some scripts.

- Spellings were poor.

- Lack of understanding of instructions. Could not explain or describe as expected.

- Poor illegible handwriting.

- Use of guess work especially on questions concerning sex.

SECTION A

1. How do we prevent babies from getting measles?

We prevent babies from getting measles by immunisation

2. How is rusting similar to breathing?

3. What First-Aid would you give to a person who has been bitten by a snake?

The first-Aid would you give a person who has been bitten by a snake by fracture

4. Why should children be stopped from eating a lot of sweets?

5. What is the main method through which AIDS can be spread from one person to another?

The main method through which AIDS can be spread from one person to another by sexual intercouse

6. Why should drinking water be boiled?

We should drinking water be boiled because the water was contaminated

7. Name the common substances used to make an oral rehydration solution.

The common substance used to make an oral rehydration solution hydration

8. What is the best food for a baby of less than one year?

The best food of for a baby of less than one year is milk

9. To which group of food crops does rice belong?

The group of food crops does rice belong is called serious

10. Give one reason why vitamin C is important in our diet.

because vitamin C is important when you built

2.1 Sample of a poor script

The sample scripts show that the candidate has little knowledge of the subject matter. In the 1st sample, he cannot express himself correctly in English although he tries to answer in full sentences. Spellings are very important especially of Science words as a candidate can fail because of that, for instance answers given to question 9. 'serious' - may be the candidate wanted to write 'cereals', question 12. 'longershitedness' was 'long sightedness'.

SECITON A

1. How do we prevent babies from getting measles?

We prevent babies from getting measles by immunisation at nine months.

2. How is rusting similar to breathing?

Rusting is similar to breathing because they both need oxygen in order to take place.

3. What First-Aid would you give to a person who has been bitten by a snake?

The first Aid I would give to a person bitten by a snake is tying a piece of cloth above the bitten part to prevent poison from going to the heart & take to a health worker

4. Why should children be stopped from eating a lot of sweets?

Children should be stopped from eating alot of sweets because eating alot of sweets causes dental car..

5. What is the main method through which AIDS can be spread from one person to another?

Aids can be spread from one person to another mainly by have sexual intercourse with an infected person.

6. Why should drinking water be boiled?

Drinking water should be boiled to kill germs.

7. Name the common substances used to make an oral rehydration solution.

Salt, sugar and water are the common substances used to make an oral rehydration solution

8. What is the best food for a baby of less than one year?

Breast milk is the best food for a baby of less than one year.

9. To which group of food crops does rice belong?

Rice belongs to a group of food crops called ~~carbohydrates~~ cereals.

10. Give one reason why vitamin C is important in our diet.

Vitamin C is important in our diet because it protects us from scurvy.

11. Name one way through which foot and mounth disease is spread among cattle.

Foot and mouth disease is spread among cattle when the infected ones feed together with the uninfected ones.

2.2 Sample of good script

A good candidate answers in full sentences, and puts in detail to show that he/she understands the subject.

DSE in Brief

The German Foundation for International Development (DSE) is an institution which provides a forum for development policy dialogue and the initial and advanced training of specialists and executive personnel from developing and transitional countries. In addition, it supports German experts preparing themselves for their assignments in developing countries and maintains the Federal Republic of Germany's largest centre for documentation and information on development cooperation issues.

Conferences, meetings, seminars and training courses support projects which serve economic and social development, thus contributing to an effective, sustainable and wide-ranging development process.

The DSE cooperates with partners at home and abroad. A considerable number of the programmes take place in the developing countries, and the rest in Germany. Since 1960 the DSE has given advanced professional training to more than 120,000 decision-makers, specialists and executive personnel from over 150 countries. Through its dialogue and training events the DSE currently reaches more than 10,000 participants annually.

Founded in 1959, the DSE contributes to development cooperation on the basis of the guidelines of the German Federal Government's development policy. The institutional donor is the Federal Ministry for Economic Cooperation and Development (BMZ). Some of the DSE programmes are, however, financed by other donors (e.g. other Federal ministries, the Federal Länder, the European Union).

Also, the Federal Länder of Baden-Württemberg, Bavaria, Berlin, North Rhine-Westphalia and Saxony have made conference and training centres available. Since its establishment, the DSE has been jointly financed by the Federation and the Länder. This finds expression in the decentralized structure of the German Foundation with its specialized departments (Centres) and conference centres in a number of Federal Länder.

Definition

learning	=	change of behavior due to experiences
learning theory	=	behavior theory to explain and to predict behavior

Through learning we acquire new…

...knowledge

we know more than before

...skills

we do things better than before

...attitudes

we hold a different opinion than before

...patterns of behavior

we behave differently than before

Learning can be categorized according to the…

...cognitive area

head

development of ideas and concepts

...psychomotor area

hand

development of movement

...affective area

heart

development of values and attitudes

Different ways of learning…

… of human beings

trial and error

observation and imitation

repetition

instilling something in the mind

insight

repeated perception

adaptation

….

Different ways of learning…

… of animals

conditioning

reinforcement

trial and error

Learning theories: 2 major schools of thinking

Behaviorism	focus on human behavior and its conditions; learning is based on forming associations between stimuli and responses; emphasis on measurable and observable components of human behavior
Cognitivism	focus on brain activities such as cognition and insight; learning is a process of discovering and understanding relationships, of organizing and re-organizing information into meaningful patterns; emphasis on perception, decision making, processing of information, understanding, problem solving

The three steps of human learning

We have not learnend something until we have…

instilled it in our mind

appreciated it

experienced it

The three components of the memory – a model

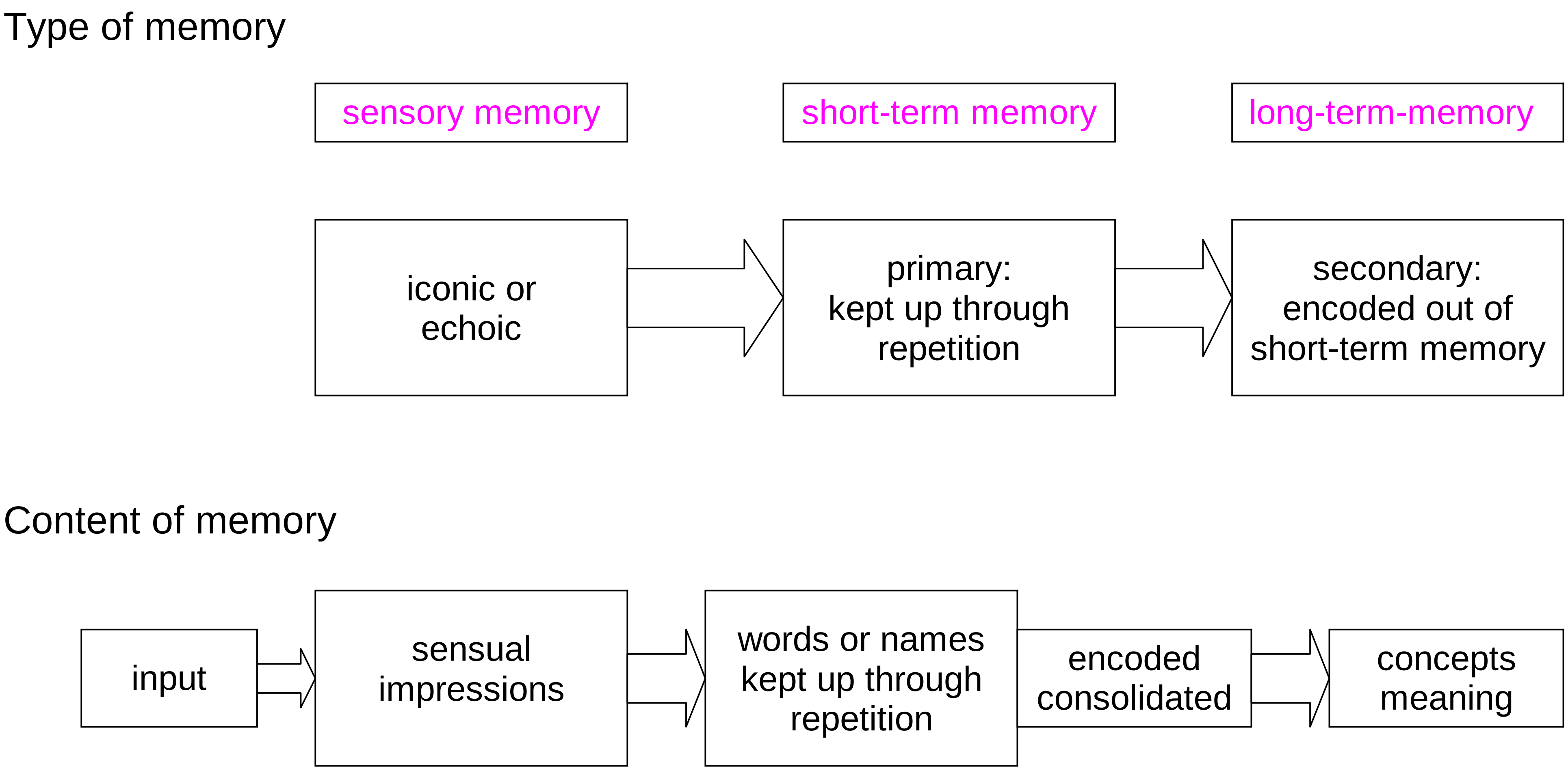

The sequence of learning

Preparation phase concentrating, perceiving

Acquisition phase naming, understanding

Storage phase repeating, encoding

Memory phase abstracting, linking

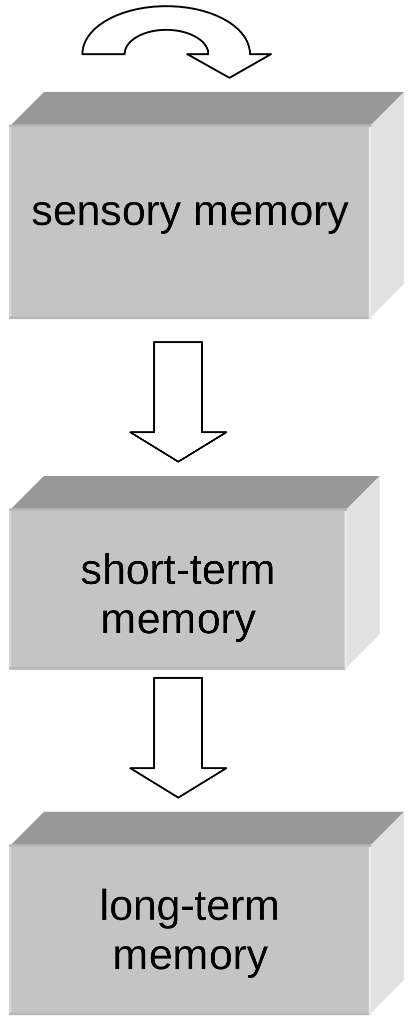

How to prepare information for storage

- Be conscious of meaning
- Learn sensible material
- Structure learning material
- Make abstracts from meaning
- Link unknown to known information
- Make use of mediators, particularly visuals

How to remember information

- Organise material
- Portion material
- Repeat material
- Learn in intervals (short breaks at the beginning, longer breaks later)
- Make use of memotechniques
- Review material
- Application is the best revision

Acquiring and remembering information

10%	by reading
20%	by hearing
30%	by seeing
40%	by seeing and hearing
60%	by talking about it
80%	by exploring and phrasing on your own
90%	by exploring and overcoming difficulties on your own

How learning is made enjoyable

- Motivate students
- Create interest in the subject
- Enhance curiosity of students
- Show links to personal life of students
- Create opportunities for achievement
- Give praise and recognition

- Show your own enthusiasm
- Enjoy teaching

Learning objectives should be...

S pecific	stated in action verbs
M easurable	indicating minimum level of concept response
A ttainable	according to trainee potential and field of expertise
R ealistic	resource- and reality-based
T ime bound	be in coherence with the training timetable

Taxonomy of learning objectives

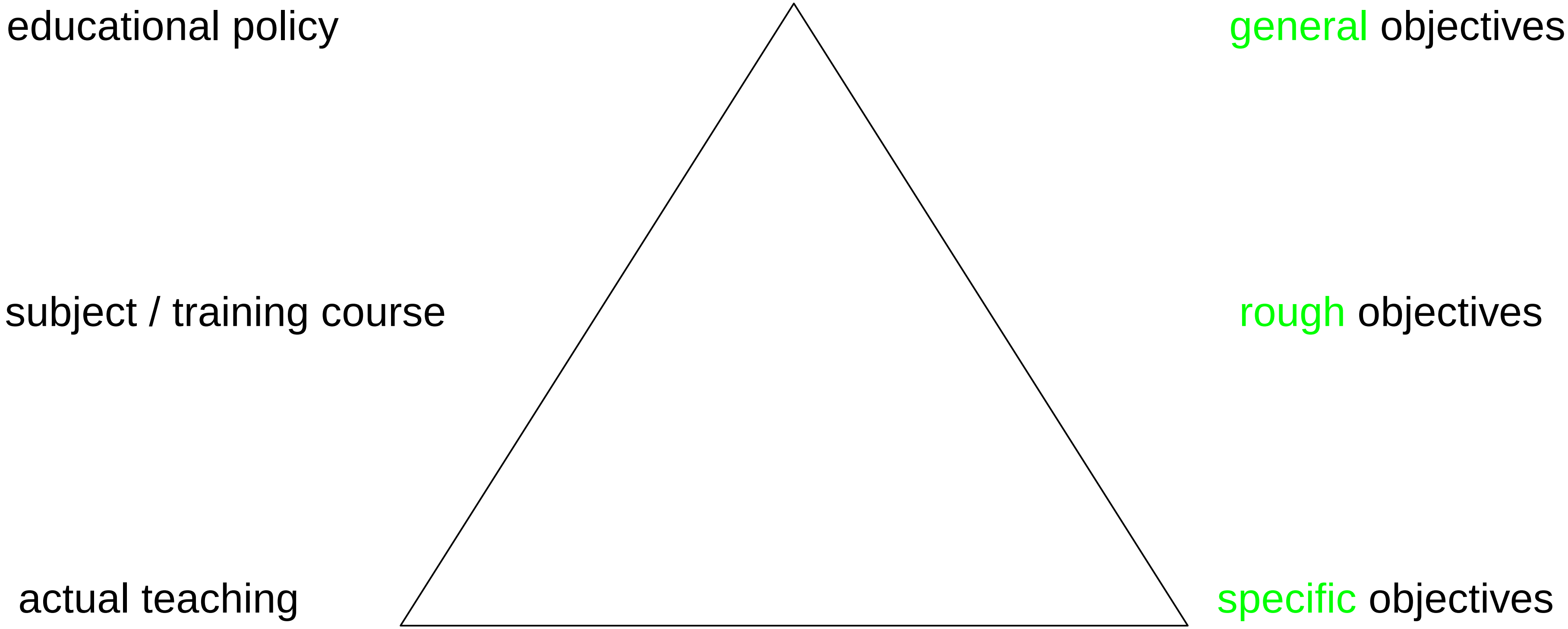

psychomotor (hand)	cognitive (head)	affective (heart)
perception	knowledge	receiving
set-up	comprehension	responding
guided response	application	valuing
internalized response	analysis	transferring
complex response	synthesis	creating
	evaluation	

Method

= a way or manner of doing something;

= the use of an orderly system as opposed to luck

Teaching method

= the way a teacher uses to impart knowledge to students

= the way of developing skills and capabilities

= the way of facilitating exchange of experiences

The right choice of method

1. Does this method lead us to our learning goal?
2. Does this method fit to our subject?
3. Does this method address the target group?
4. Are all participants – teacher as well as students – able to handle the method?
5. Is it possible to realize this method?

Didactical arrangements

20 – minutes – rule

Teacher-centered	each part not longer than 20 min	e.g. lecture, presentation
Students-centered	each part not shorter than 20 min	e.g. group work, partner work

Alternation – rule

Receiving activities	-	giving activities
Breathe in	-	breathe out

Basic structure of lessons

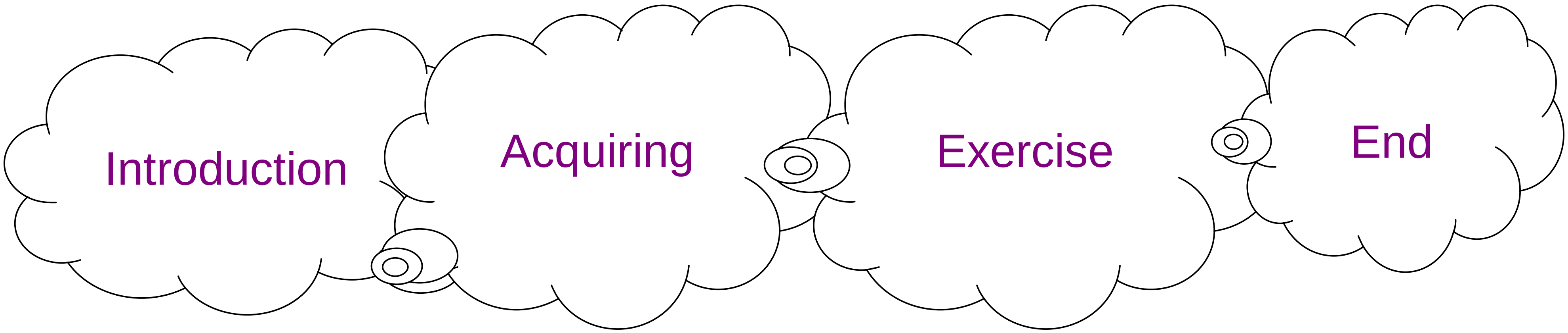

5 min	25 min	25 min	5 min

Introduction	Acquiring	Exercise	End
should	should	should	should
- orient and motivate	- impart topic	- apply new knowledge using variety of methods	- summarize, repeat, generalize
- connect topic to known subjects	- illustrate topic (e.g. with experiment)		- give prospect for coming lesson
- attract attention	- guide to new insight		- give test or homework
			- check, assess, evaluate

The four step method

1. Step:

Preparation of student

2. Step:

Demonstration and explanation

3. Step:

Student activity

4. Step:

Exercising and strengthening

1. Step:

Preparation of student

- take away the shyness
- motivate
- show the objectives and tasks
- evaluate the knowledge
- familiarize with the work place
- give advice concerning safety

2. Step:

Demonstration and explanation

- position the student so that s/he is standing in the same direction to the work piece
- demonstrate the whole procedure in original time
- in case of complicated procedures divide them into modules and teach them step by step
- repeat the demonstration and make single steps visible
- say what you are doing, how and why you are doing it in that way
- give the opportunity to ask questions

3. Step:

Student activity

- encourage the student
  to try it on his/her own

- don't interrupt the student
  in his/her first attempts

- make comments on serious mistakes

- precision is more important than speed

- let the student say
  what s/he is doing, how and why

4. Step:

Exercising and strengthening

- give enough time to exercise
- acknowledge progress
- control that no mistakes are done during exercising
- change conditions of exercising
- slow adaptation to real working condition

Questions as instruments for...

- Guiding the attention of students
- Arousing the curiosity of students
- Arousing the appreciation of problems
- Initiating thinking
- Saving of results
- Evaluating students
- Disciplining students

Different kinds of questions…

concerning…

- Knowledge
- Process
- Relationship
- Content
- Comprehension
- Thinking

Open questions

Closed questions

Questions to avoid

- Chain questions
- Leading questions
- Echo questions
- Trick questions
- Rhetorical questions

Demanding too much in…

- Factual way
- Linguistic way
- Intellectual way

Demanding too little

Question formulation	Effect
Starting with an interrogative Why What Who When Where HoW	Make a problem evident
Only one question per sentence	Focus on one problem; not demanding too much nor too little
Short, precise questions	Get the problem fast
Give the question to the whole group	All students are included, start to think
Give enough time	Thinking without time pressure; chance to give reasons for the answer
Formulate open questions	Initiate thinking; opinion forming

Good questions…

- make the class curious
- are answered lightly and fast
- show what is happening in the group
  (what the others think)
- touch common interest
- include the students' personality
- do not close an issue, they lead further
- show the targets
- make wishes visible
- may lead to a new question

Bad Questions…

- are leading questions
- demand yes or no
- try to show up the lack of knowledge of others
- serve the self-portrayal of the teacher

Comprehensibility of lectures

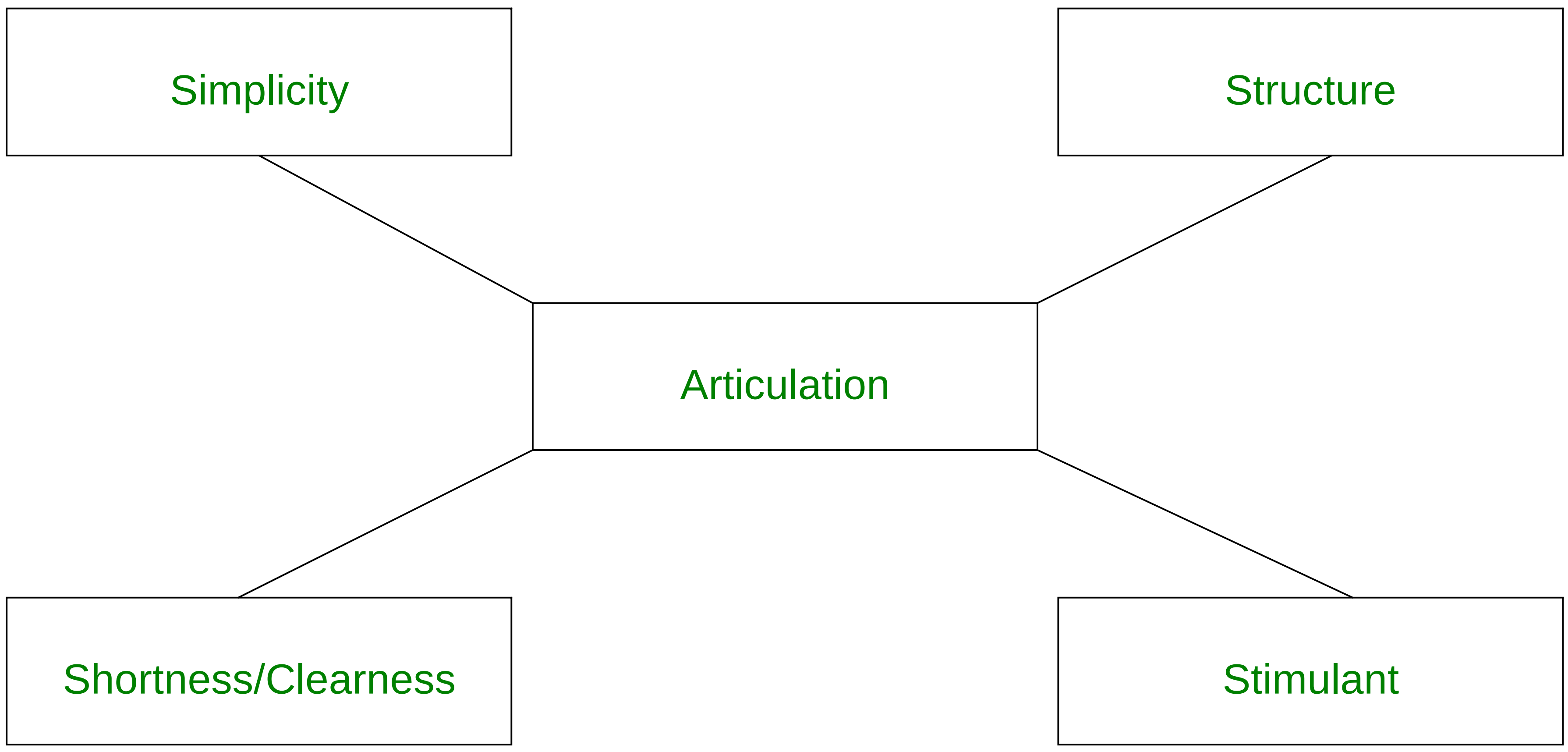

Simplicity

- Speak in simple terms
- Avoid complicated formulation or foreign words
- Give explanations of specific terms
- Use simple constructed sentences

Shortness/Clearness

- Use short sentences
- Be exact in what you say
- Be concentrated to the objective
- Be precise in your statement
- Give only important and necessary explanations
- Maximize your time

Structure

The visible structure

- State the topic
- Give reasons for topic
- Follow outlined structure
- Summarize

The inner structure

- Logical flow of information
- Link different items
- No jumping from one idea to another
- Emphasize important, not unimportant items
- Red thread must be visible

Stimulant

- Support statements by stories
- Use pictorial language, give examples
- Visualize statements
- Present data and facts by comparison
- Give own opinion
- Be creative in formulation
- Show own interest
- Create an atmosphere
- Include other opinions
- React to audience

Articulation

Voice

speak loud and clear

make pauses, especially when you move

speak slowly

apply verbal emphasis

express enthusiasm

Face

face the audience

look to the eyes of the audience

don’t look from the corner of your eye

show facial expressions related to what you say

Articulation

Posture & bearing

vertical, frontal, open, not hidden

stay with both feet on the ground

raised head, but not snooty

Arms and hands

resting position

pictorial gestures according to the speech

slow, quiet movement

avoid movement below waist

Movement

move goal-oriented, not at random

calmly handle your tools

control movements

change the front sometimes, go beside the audience

Main preparation steps

- Lay down theme
- Choose material
- Order it
- Structure it
- Limit it to essential part
- Make list of main points and facts
- Show red thread
- Estimate time frame
- Shorten

Structure of lectures

Introduction-Mainpart-End

Introduction	Greetings, Theme, Objectives Organizational affaires Motivation
Transition to mainpart	
Mainpart Central idea 1 Central idea 2 Central idea 3	4 Structural elements: • Signposts – important information • Bridges – make links • Fences – limit topic • Markings – give meaning 4 Relaxation elements: • Questions • Examples • Comparisons • Persons
Transition to the end	
End	Result/Conclusion Summarize Generalization/Prospects

Functions of visualization

- Animation
- Information
- Documentation
- Illustration
- Securing of results

Enhancing

- Learning process
- Remembering information
- Retrieving information

Some basic rules….

… for writing:

- Form columns
- Avoid whole sentences
- Use key words
- Avoid wide spacing between letters
- Avoid bold letters
- Use capital and small letters
- Same letter size for same importance
- Think of reading habits (top left to down right)
- Use only known abbreviations
- Check writing from the distance
- Show links by same colour and form

Some basic rules….

…for colour coding

- Use neutral colour (black) for main parts
- Use red for calling the attention
- Use other colours (green, orange, blue) for emphasis
- Group according to colour (e.g. positive – negative)

Examples of design elements

arrows

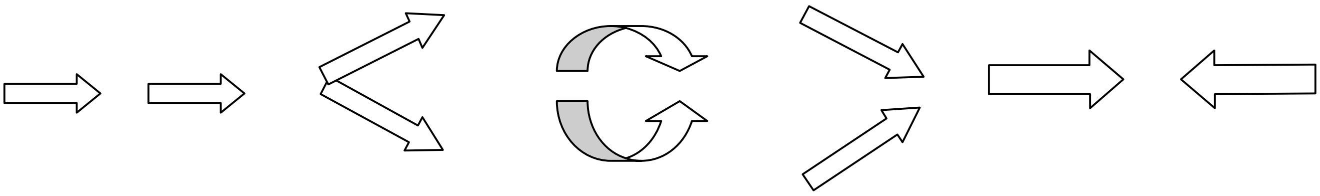

linear diverging cyclic converging contrary

rectangulars, lines, stripes, clouds

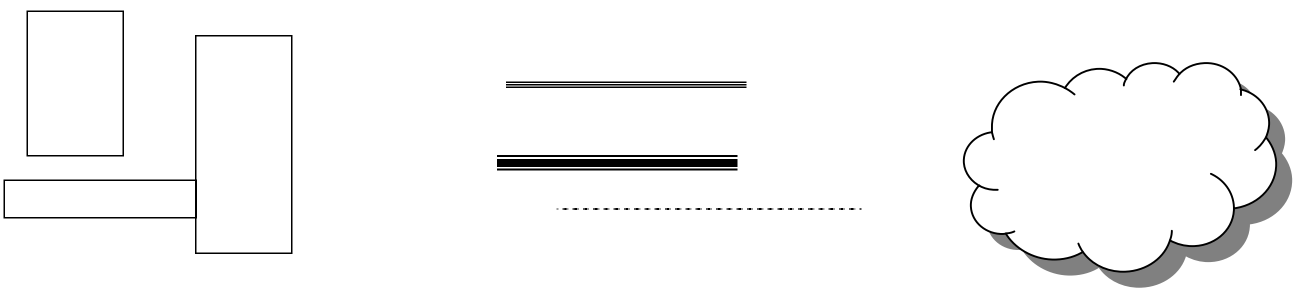

pictograms

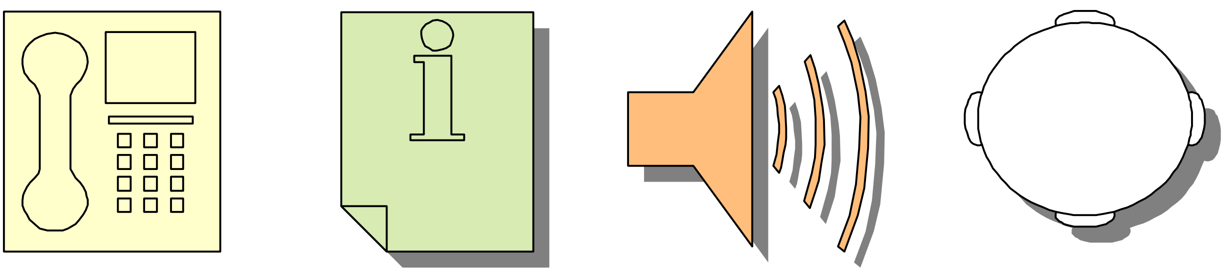

charts

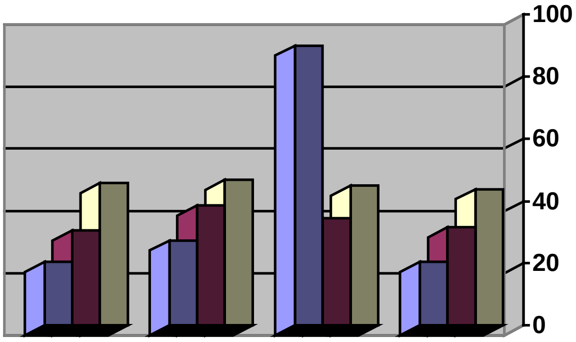

Column chart: comparison of sizes

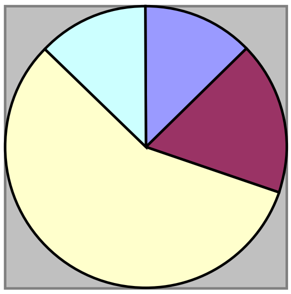

Pie chart: the whole and its parts

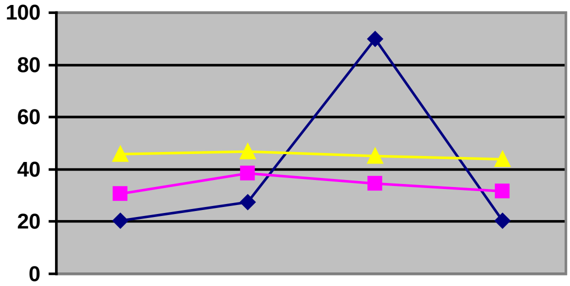

Curve chart: visualizing developments

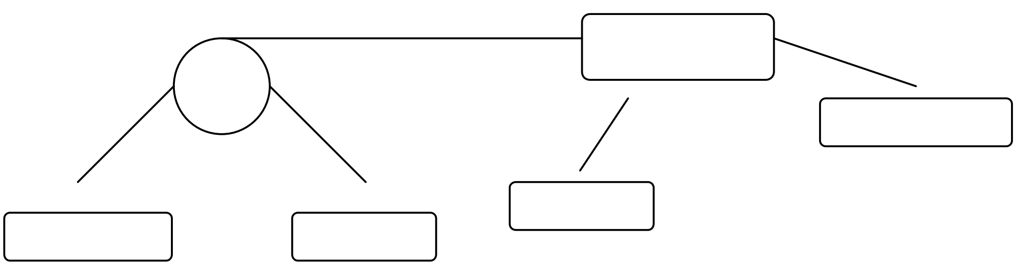

Organigram/flow chart: visualizing structures and procedures

Requirements for teaching

Address all senses

- Multi channel information
- Allow for cognitive and affective perception
- Facilitate active visualization

Link teaching to reality

- Use originals
- Combine originals with media
- Combine theory and practice
- Incorporate professional experience

Requirements for teaching

Observe teaching principles

- Show only the essentials
- Simplify complex and complicated processes
- Proceed from the simple to the complicated
- Proceed from the known to the unknown
- Proceed from the concrete to the abstract

Involve students

- Avoid ready made solutions
- Allow students' to work independently with media
- Encourage teamwork

The hierarchy of media in teaching

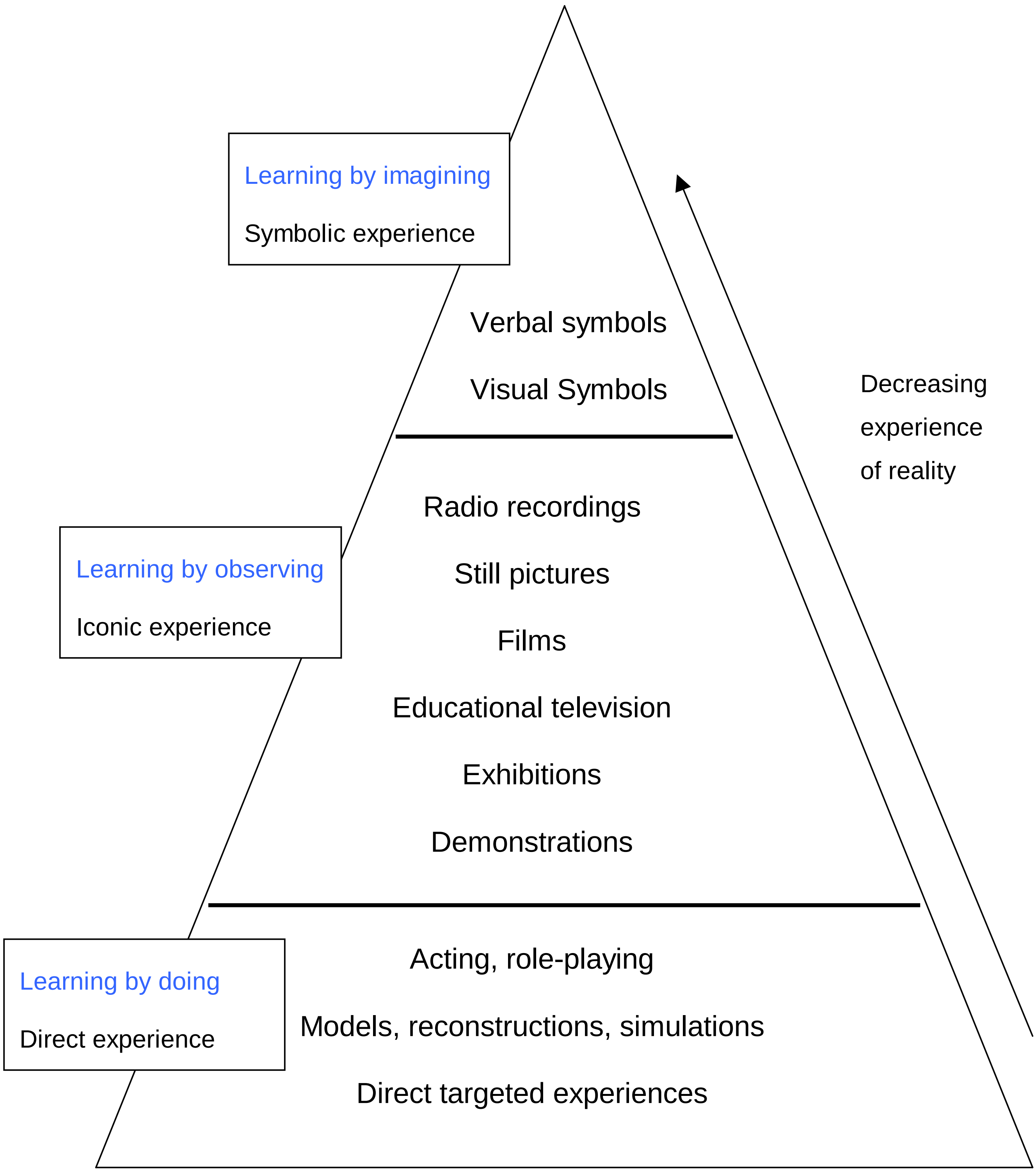

Control

... shows teacher results of his/her work

… gives teacher clues for further lesson design

... student can assess performance and own status of development

… student receives praise and/or incentive to change behavior

Main goal:

stimulation of high learning results

Control should be…

objective

comparable

evaluable

Control should…

…correspond to learning objectives:

cognitive

affective

psychomotor

time

quality

quantity

Kinds of Control

- Regular control
- Control questions
- Exercises

- Performance controls
- Tests

- Pieces of work
- Examinations

THE USE OF SCAFFOLDS

Definition:
A scaffold is a framework of metal or wooden poles and planks used as a temporary platform from which building repair or construction is carried out. Dependent scaffolds are usually fixed on a house or a wall and cannot stand freely while there are poles only on one side of the scaffold while the other side is connected with the building, which gives it a proper stability. Independent scaffolds do not require the support of any wall or building because of having poles on both sides, which allow erecting them independently. Scaffolds can carry workers and material but one must be careful not to put too many loads like blocks and motor so that the planks cannot carry the load and will break down.

The Use of Scaffolds

Definition:
A scaffold is a framework of metal or wooden poles and planks used as a temporary platform from which building repair or construction is carried out.

Dependent scaffolds are usually fixed on a house or a wall and cannot stand freely while there are poles only on one side of the scaffold while the other side is connected with the building, which gives it a proper stability.

Independent scaffolds do not require the support of any wall or building because of having poles on both sides, which allow erecting them independently.

Scaffolds can carry workers and material but one must be careful not to put too many loads like blocks and motor so that the planks cannot carry the load and will break down.

The Use of Scaffolds

Scaffolds are put up when work has to be done above men's height.
They carry persons and construction material.

Types of scaffolds

<u>Dependent Scaffold</u>

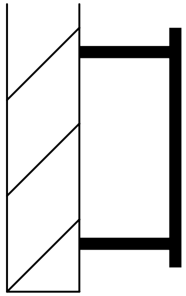

Are fixed onto the
Building and cannot
Stand alone.

Are more stable but
Cannot be erected
Freely.

<u>Independent Scaffold</u>

can be erected
without connecting
It to a building.

can be erected
everywhere but
Are not as stable.

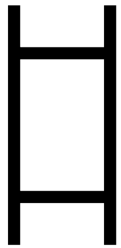

Do not overload scaffolds! Be careful when working on them!

The two sides of the brain

Left	**L**ogic brain	c**R**eativ brain	**R**ight
	Speech	Creativity (new combinations)	
	Calculations	Artistic activity	
	Intellectual Analysis	Musical ability/Rhythm	
	Reading	Emotions	
	Writing	Comprehension	
	Naming	Perception of abstract patterns	
	Ordering	Spatial abilities	
	Sequencing	Facial expressions	
	Complex motor sequences	Holistic ability	
	Critique	Intuition	
	Evaluation	Images	
	Logic	Colours	

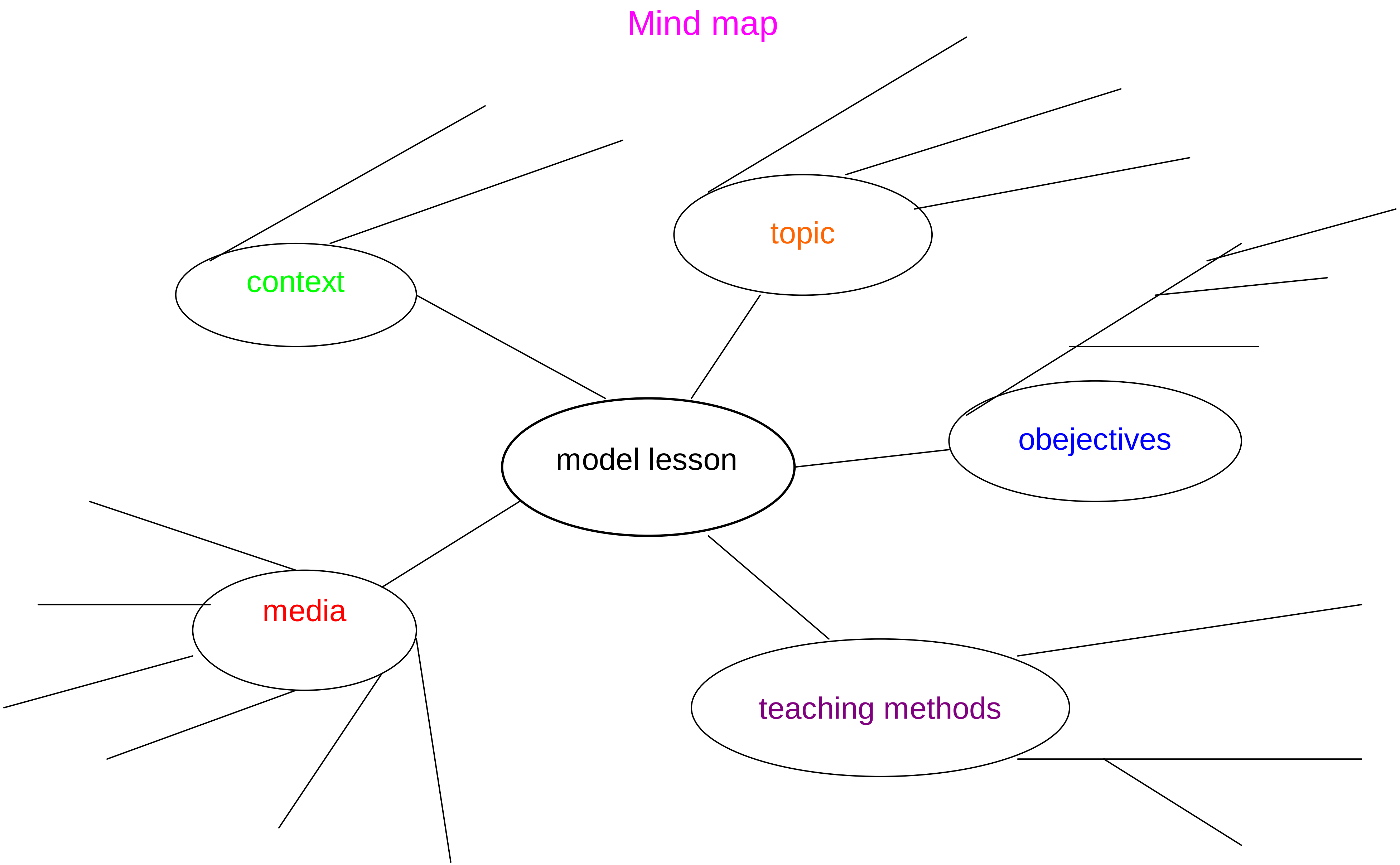
Mind map
topic
context
model lesson
obejectives
media
teaching methods